- PN-AAW-992 49910

THIRD USAID / GOI WORKSHOP ON ALTERNATE ENERGY RESOURCES AND DEVELOPMENT

COAL CONVERSION AND BIOMASS CONVERSION

* * * * * * * * * * * * * * *

MAURYA PALACE - SHERATON HOTEL

NEW DELHI, INDIA

DECEMBER 5-7, 1985

Issued May 15 '86

THIRD USAID/GOI WORKSHOP

ON

ALTERNATE ENERGY RESOURCES

AND

DEVELOPMENT

COAL CONVERSION

AND

BIOMASS CONVERSION

* * * *

MAURYA PALACE-SHERATON HOTEL

NEW DELHI, INDIA

DECEMBER 5-7, 1985

TABLE OF CONTENTS

	Page
Introduction	1
Agenda	3
Session 1: December 5, 1985	
Introductions by D. Bienstock:	
S. Varadarajan, CSIR	7
M.K. Sridhar, BHEL	21
Award Presentation	33
M. Dayal, DNES	34
V. Balasubramaniam, AIEI	35
Session 2: December 5, 1985	
STATUS OF THE FLUIDIZED BED TECHNOLOGY IN THE U.S. - J.W. Bass III, and D. Daugherty (TVA)	49
CURRENT COAL CLEANING PRACTICES IN THE U.S. - A. Deurbrouck (USDOE, PETC)	75
FUEL GAS UPGRADING AND SEPARATION - M. Ghate (USDOE, METC)	86
50,000 TONS/YEAR COAL WATER SLURRY PRODUCTION PLANT - C. Eich (Foster-Wheeler)	126
CURRENT DEVELOPMENTS AND FUTURE TRENDS IN THE USE OF WOOD FUEL IN FLUIDIZED BED GASIFIERS - V. Flanigan (University of Missouri-Rolla)	133
OVERVIEW OF US/INDIA ALTERNATE ENERGY RESOURCE DEVELOPMENT PROGRAM IN BIOMASS AND COAL CONVERSION - D. Bienstock (USDOE, PETC)	155
CONCEPT OF A SOLAR/AFBC 30 MWe POWER PLANT - Raj Gopal (Westinghouse Electric)	174a
APPLICATIONS OF FBC SYSTEMS FOR RETROFITS - R.J. Gendreau (Stone & Webster)	175
Questions and Answers	209

TABLE OF CONTENTS

Page

Coal Conversion Session 1: December 6, 1985

AFBC TEST FACILITY FOR HE EVALUATION OF FREEBOARD PERFORMANCE - S. Chandrasekaran, A.V.V. Murthy (BHEL), R.P. Krishnan (ORNL) 225

AFBC BOILER SCALEUP - K.M.V. Malarkkan, S. Rajaram, G. Viswanathan, S. Sundarajaran (BHEL) 237

30 MWe AFBC DEMONSTRATION PLANT - G. Viswanathan, S. Shanmugam (BHEL) 257

STUDIES ON STABILITY AND FLOWABILITY OF COAL-WATER MIXTURE (CWM) FUEL - M. Chakraborty, T.K. Bhowmik, Mithilesh Prasad, S. Chanda, S. Majumdar (CFRI) 272

DEVELOPMENT OF COAL WATER SLURRY COMBUSTION TECHNOLOGY PROGRESS IN BHEL - K. Nandakumar, P.V.L.N. Sarma, R. Pattabiraman, K.M.V. Malarkkan (BHEL) 293

Questions and Answers 316

Coal Conversion Session 2: December 6, 1985

STUDIES IN RELATION TO BENEFICIATION OF SMALL COAL IN DENSE MEDIUM CYCLONE - A.K. Chakravarti (CFRI) 331

HOT GAS CLEANUP: BHEL'S PROGRAM ON GRANULAR BED FILTER (GBF) - R.S. Rangan (BHEL) 346

SOME RECENT TRENDS IN COLD GAS CLEANUP - S.N. Reddy, R. Vaidyeswaran (RRL) 365

EVALUATION OF INDIAN COALS FOR COAL SLURRY FUELS - R. Powell (CoaLiquids) 375

R&D ACTIVITIES ON FLUIDIZED BED GASIFICATION OF COAL AND COM COMBUSTION - A.B. Datta, P.K. Chatterjee, K.M. Kundu, B.B. Bansal (CMERI) 376

Questions and Answers 388

TABLE OF CONTENTS

	Page
Biomass Conversion Session 1: December 6, 1985	
DEVELOPMENT AND OPERATION OF BIOMASS GASIFICATION SYSTEM FOR 5 HP IRRIGATION PUMPS - S. Guar, N. Anuradha, T.R. Rao, P.V.R. Iyer, P.D. Grover (IIT)	392
UTILIZATION OF PRODUCER GAS IN A SMALL HORSEPOWER ENGINE - H.B. Mathur (IIT)	421
FIELD IMPLEMENTATION OF GASIFIER SYSTEM FOR IRRIGATION - M.B. Durgaprasad, V.K. Jain, R.N. Pandya, S.R. Patel, K.S. Shah (JSEI)	422
Questions and Answers	433
Biomass Conversion Session 2: December 6, 1985	
PRELIMINARY EXPERIENCE WITH A THROATLESS GASIFIER ENGINE CUM SYSTEM - Anil Rajvanshi (NARI)	445
EXPERIENCE WITH GASIFIERS FOR 3.7 kW ENGINES - S. Dasappa, V. Reddy, H.S. Mukunda, U. Shrinivasa	452
GASIFICATION OF PULP AND PAPER MILL WASTE TO REPLACE FOSSIL FUEL IN LIME KILN - Harish Dak (Tharper R&D Center)	458
STUDIES OF BIOMASS CHARACTERIZATION - N. Anuradha, S. Gaur, S.S. Sambi, T.R. Rao, P.V.R. Iyer, P.D. Grover (IIT)	479
ECONOMICS OF BIOMASS GASIFICATION - T.K. Moulick	501
PROGRESS OF ONGOING PROJECT- K.V. Gopalkrishna	502
TAR PRODUCTION DURING GASIFICATION - P.P. Parikh, P. Arikkat, A.G. Bhave, Uma Ramaswamy (IIT)	503
Questions and Answers	524
Concluding Session: December 5, 1985	534
Appendix 1: List of Attendees	539

THIRD ANNUAL WORKSHOP ON

COAL AND BIOMASS CONVERSION PROGRAMS OF THE

USAID/GOI ALTERNATIVE ENERGY RESOURCES DEVELOPMENT PROJECT

The Third Annual Workshop on the USAID/Government of India Cooperative Program on Alternative Energy Resources Development - Coal/Biomass Conversion was held at the Maurya Sheraton Hotel in New Delhi on December 5 - 7, 1985.

The intent of the Workshop was to review the progress of the program during the past year; to encourage U.S. specialists to discuss with their Indian counterparts the direction and future of the program; to assess the status of the individual projects through site visits to the facilities and to address any concerns or anticipated problems in meeting the objectives of each of the collaborative projects; and to provide a forum for technical exchange between U.S. and Indian industry to understand the need for and availability of technology, products, and services in the U.S. and India in specific areas of interest in coal and biomass conversion.

There are six projects which have been selected for collaboration in coal conversion and three in biomass conversion. The six coal projects are:

- Evaluation of the Freeboard Performance in a Fluidized Bed Combustor
- AFBC Boiler Scaleup
- Hot Gas Cleanup
- Cold Gas Cleanup and Separation
- Rheology, Stability, and Combustion of Coal/Water Mixtures
- Coal Beneficiation

The three major biomass conversion projects are the following:

- Development of a Village-Level Gasifier (5 HP) Based on Charred Agricultural Residue for use with Irrigation Pumps
- Utilization of Producer Gas in Small (3-5 HP) Utility Engines
- Development and Field Implementation of Small Wood-Based Gasifier Engine Systems (5-30 HP)

The workshop sessions included presentations by Indian scientists/engineers and U.S. team members on the above-mentioned projects, and representative of U.S. industrial organizations. The presentations were followed by panel discussions. At the opening of the Workshop, representatives from the Government of India, some of the participating laboratories, and the Association of Indian Engineering Industries, emphasized the need and importance of technology development in meeting India's energy requirements.

At the request of the Department of Non-Conventional Energy Sources, Government of India, additional presentations in the area of biomass conversion were made on December 6 by scientists/ engineers from the Indian private sector and government institutions.

At the workshop, the Program Manager, Mr. Daniel Bienstock of the Pittsburgh Energy Technology Center (USDOE) was honored by Bharat Heavy Electricals, Ltd., India, in appreciation for his contributions to the Alternate Energy Resource Development Program.

AGENDA

THIRD USAID/GOI WORKSHOP

ON

ALTERNATE ENERGY RESOURCES

Thursday, December 5, 1985

Morning Session

10:00 a.m. - 12:30 noon	Introduction - D. Bienstock, U.S. DOE (PETC) Presentations by the following organizations: o DNES - M.Dayal o CSIR - S. Varadarajan o BHEL - M.K. Sridhar o AIEI - V. Balasubramaniam o U.S. DOE (PETC) - D. Bienstock
12:30 p.m. - 1:30 p.m.	Lunch

Afternoon Session: Coal and Biomass Technologies in the U.S. - K.T.U. Malliah (BHEL), Chairperson

2:00 p.m. - 2:30 p.m.	Status of the Fluidized-Bed Technology in the U.S. - J.W. Bass III, D. Daugherty (TVA)
2:30 p.m. - 2:50 p.m.	Current Coal Cleaning Practices in the U.S. - A. Deurbrouck, U.S. DOE (PETC) Paper presented by D. Bienstock
2:50 p.m. - 3:10 p.m.	Fuel Gas Upgrading and Separation - M. Ghate, U.S. DOE (METC) 50,000 tons/year Coal Water Slurry Production Plant - C. Eich, Foster-Wheeler
3:10 p.m. - 3:40 p.m.	Current Developments and Future Trends in the Use of Wood Fuel in Fluidized Bed Gasifiers - V. Flanigan, Univ. of Missouri
3:40 p.m. - 4:05 p.m.	Concept for a Solar/AFBC 30 MWe Power Plant - Raj Gopal, Westinghouse Electric
4:05 p.m. - 4:20 p.m.	Applications of FBC Systems for Retrofits - R.J. Gendreau, Stone and Webster

	Paper presented by Richard Grieve.
4:30 p.m. - 4:45 p.m.	Break
4:45 p.m. - 5:15 p.m.	Panel Discussion
7:30 p.m.	Reception and Dinner

Friday, December 6, 1985

Coal Conversion Session

Morning Session: Combustion - Y.P. Abbi (BHEL), Chairperson

9:00 a.m. - 9:30 a.m.	AFBC Test Facility for the Evaluation of Freeboard Performance - S. Chandrasekaran, A.V.V. Murthy (BHEL), R.P. Krishnan (ORNL)
9:30 a.m. - 10:00 a.m.	AFBC Boiler Scaleup - K.M.V. Malarkkan, S. Rajaram, G. Viswanathan, S. Sundararajan (BHEL)
10:00 a.m. - 10:30 a.m.	30 MWe AFBC Demonstration Plant - G. Viswanathan, S. Shanmugam (BHEL)
10:30 a.m. - 11:00 a.m.	Break
11:00 a.m. - 11:30 a.m.	Studies on Stability and Flowability of Coal-Water Mixture (CWM) Fuel - M. Chakraborty, T.K. Bhowmik, Mithilesh Prasad, S. Chanda, S. Majumdar (CFRI)
11:30 a.m. - 12:00 a.m	Development of Coal Water Slurry Combustion Technology Progress in BHEL - K. Nandakumar, P.V.L.N. Sarma, R. Pattabiraman, K.M.V. Malarkkan (BHEL)
12:00 a.m. - 12:35 p.m.	Panel Discussion
12:30 p.m. - 1:30 p.m.	Lunch

Afternoon Session: Coal Preparation and Gas Cleanup - R. Haque (CFRI), Chairperson

1:40 p.m. - 2:10 p.m.	Studies in Relation to Beneficiation of Small Coal in Dense Medium Cyclone - A.K. Chakravarti (CFRI)
2:10 p.m. - 2:40 p.m.	Hot Gas Cleanup: BHEL's Program on Granular Bed Filter (GBF) - R.S. Rangan (BHEL)

2:40 p.m. - 3:10 p.m.	Some Recent Trends in Cold Gas Cleanup - S.N. Reddy, R. Vaidyeswaran (RRL)
3:10 p.m. - 3:30 p.m.	Evaluation of Indian Coals for Coal Slurry Fuels - Robert Powell (CoaLiquids)
3:30 p.m. - 3:40 p.m.	R&D Activities on Fluidized Bed Gasification of Coal and COM Combustion - A.B. Datta, P.K. Chatterjee, K.M. Kundu, B.B. Bansal (CMERI)
3:40 p.m. - 4:00 p.m.	Break

Friday, December 6, 1985

Biomass Coversion Session

Morning Session - O.P. Vimal (DNES), Chairperson

9:00 a.m. - 9:30 a.m.	Development and Operation of Biomass Gasification System for 5 HP Irrigation Pumps - Siddhartha Gaur, N. Anuradha, T.R. Rao, P.V.R. Iyer, P.D. Grover (IIT)
9:30 a.m. - 10:00 a.m.	Utilization of Producer Gas in a Small Horsepower Engine - H.B. Mathur (IIT)
10:00 a.m. - 10:30 a.m.	Field Implementation of Gasifier System for Irrigation - M.B. Durgaprasad, V.K. Jain, R.N. Pandya, S.R. Patel, K.S. Shah
10:30 a.m. - 11:00 a.m.	Break
11:00 a.m. - 11:20 a.m.	Scope and Limitations of Utilization of Biomass-Produced Gas in Dual-Fuel Operation of Existing Diesel Engines
11:20 a.m. - 11:40 a.m.	Remarks on DNES-supported Biomass Gasification Projects - O.P. Vimal
11:40 a.m. - 12:15 p.m.	Panel Discussion
12:30 p.m. - 1:30 p.m.	Lunch

Afternoon Session: Biomass Conversion, Continued - Dr. P. Parikh (IIT, Bombay), Chairperson

1:30 p.m. - 1:55 p.m.	Video Movie on Khandia Village Renewable Energy System. Prepared by Gujarat Energy Development Administration (GEDA)

1:55 p.m. - 2:10 p.m.	Preliminary Experience with a Throatless Gasifier Engine CUM System - Anil Rajvanshi (NARI)
2:10 p.m. - 2:25 p.m.	Experience with Gasifiers for 3.7 kW Engines - S. Dasappa, V. Reddy, H.S. Mukunda, U. Shrinivasa
2:25 p.m. - 2:40 p.m.	Gasification of Pulp and Paper Mill Waste to Replace Fossil Fuel in Lime Kiln - Harish Dak (Tharper R&D Center)
2:40 p.m. - 3:00 p.m.	Break
3:00 p.m. - 3:15 p.m.	Studies on Biomass Characterization, Dept. of Chemical Engineering, IIT, New Delhi - N. Anuradha, Siddhartha Gaur, S.S. Sambi, T.R. Rao, P.V.R. Iyer, P.D. Grover
3:15 p.m. - 3:30 p.m.	Economics of Biomass Gasification Technology - Dr. T.K. Moulick
3:30 p.m. - 3:45 p.m.	Progress of Ongoing Project - Dr. K. V. Gopalkrishna
3:45 p.m. - 4:00 p.m.	TAR Production During Gasification - P.P. Parikh, P. Arikkat, A.G. Bhave, Uma Ramaswamy - IIT, Bombay

---

Friday, December 6, 1985

Concluding Session - Dan Bienstock (U.S. DOE PETC), Moderator

4:00 p.m. - 5:00 p.m.	o O.P. Vimal (DNES) o V. Flanigan (University of Missouri-Rolla) o M.K. Sridhar (BHEL) o N.N. Ramakrishnan (BHEL)
7:30 p.m.	Dinner

DECEMBER 5, 1985

* * * * * * * *

INTRODUCTIONS BY MR. DANIEL BIENSTOCK (USDOE/PETC)

The first speaker is Dr. Varadarajan. Dr. Varadarajan is the Director General of the Council of Scientific and Industrial Research. Previously he served as Secretary of the Department of Science and Technology, Chairman of the Engineers India Limited, and Chairman of Indian Petrochemicals Corporation Limited. During the Bhopal gas leakage, he was the scientist in charge of the investigation and the neutralization of the remaining gas in the holders. He received the prestigious award of Padmashri from India.

I would like to introduce Dr. Varadarajan . . .

* * * * * * * *

Varadarajan

Mr. Bienstock, members of the group participating in this workshop, ladies and gentlemen; first of all I would like to thank Mr. Bienstock for arranging for my short presentation on this very important subject. As you know, the Council of Scientific and Industrial Research, which started in earnest in 1948, has had considerable interest in almost all forms of energy. The Council has a large interest in coal through its Central Fuel Research Institute and it has work proceeding on coal in many other laboratories including Regional Research Laboratory in Hyderabad, and Regional Research Laboratory at Jorhat. We are of course, interested in other areas such as the development of equipment and machinery in our Laboratories at the National Aeronautic Laboratory at Bangalore, The Central Mechanical Engineering Research Institute at Durgapur, and we are very much interested in the problems of cleaning materials, such as work at our National Environmental Engineering Research Institute indicates. Our research laboratory at Bhubaneswar has also been interested in the efficient use of coal by devising acoustic methods.

We are also interested in other forms of energy. The Indian Institute of Petroleum at Teratas is a major institute in this

area which has a main concern with the use of petroleum - the refining of petroleum. It is remarkable that in India, with the discovery of off shore oil and the increase in production by about 25 million tons in the last seven years, it has been possible to use existing facilities in our refineries to manage the production and conversion for many different kinds of feedstock and produce our requirements inside the country.

Similarily, we have considerable interest in other forms, especially in the renewable energy sources. It was the National Physical Laboratory in Dehli which started work on solar energy. We have now expanded this work into many other areas. India has been able to devise whatever it takes, entirely on its own and we are now producing at the rate of over 2 MW per annum and it will be expanded to 7 or 8 MW per annum. Similarily, in the whole area of efficient combustion biomass, coal, or wood, many of our institutions and educational training institutions such as the Institute of Technologies, have taken interest. They are all beginning to commercialize with many companies such as Bharat Heavy Electricals Ltd., and Jyoti Ltd. They have a very direct interest in both renewable energy sources, capital equipment, and processes as well as more efficient use of nonrenewable energy sources.

This particular workshop is the result of the cooperation with

USAID and the Government of India, and specific projects have been proposed and pursued. There was an opportunity in February this year to review the work that has been in progress, and I am glad that another such workshop has been arranged to make the proper review of these. It is necessary to produce in these workshops the very best of science that both sides can bring because today the Indian laboratories and the Indian systems are well advanced and are in a position to bring very good systems of science, technology, measurement and so on. I hope that what is going to be presented will reflect this capability on both sides.

We now have four projects that we are going to review. Three of these are those which were mentioned earlier involving coal and CSAR Laboratories. These involve the very important problem of producing clean coal washing and particularly good attention to midlings.

India has very large coal reserves and I expect through our surveys we will still be able to find more. But nevertheless, the quality of the coal is such that it requires specific attention. Our present production of over 150 million tons is expected to increase to 375 million tons in the next 15 years. Indeed if India is going to progress further, and raise standards of living, we know that the rate of increasing energy will be one of the biggest indicators of these improvements. As a result, I

am not sure that the amount will be restricted to recent family intents. Much of it is due to infrastructure problems, therefore we expect a steady growth in coal production and coal utilization. When the utilization quantities were smaller and certain inefficiencies could be tolerated. With the requirements and usage increasing, there is a much greater need for very efficient utilization of all coals. That means we know our present problems of accumulation of midlings has to be tackled and this will require a considerable amount of work. This is a combination of good science and it is also a challenge for our engineering and capital equipment producers to design equipment which would withstand the new and specific conditions of high ash coals and washery rejects.

The other area of very great interest to us is the transportation of coal. Variable amounts of work have been done on unconventional and modern methods of transportation in the form of slurry. We have our best experience in iron ore and we have established a very long pipeline for our new slurry in south India where there are arid regions. A considerable amount of work has been done in our laboratories on slurry transportation pilot plants and there is now a proposal to work on very thick slurries with small amounts of water. This is a very demanding kind of work which requires innovation and the use of additives - methods by which separation would be aviodable - the choice of

pumps and other equipment, new instrumentation for this purpose. I do hope the workshop will devote some time to see what should be done and arrange for some specific targets and objectives in a time bound manner. If the objectives are challenging enough and the scientific inputs are big enough, we from the Council of Scientific and Industrial Research would be very happy to concentrate our efforts in such areas and not necessarily limit ourselves to assistance from outside sources. That is very welcome. But, nevertheless, the most important outcome of this joint workshop should be the meeting of minds and the challenges that will be provided. I do hope that some very interesting questions will be raised for the future of this work.

As our requirements for coal increase and our own committment to our environment improves, we have great interest in insuring good quality environment. This is more easily said than done because our rate of growth and usage of normal energy sources is increasing very quickly, and as a result there are many changes taking place. The city of Dehli, for instance, in the last thirty years has changed enormously. I think all these areas were inhabited by wild animals and it was quite difficult to get from old Delhi to New Delhi and back in less than a day's journey. But the changes that have taken place reflect the amount of energy usage and the damage or effect on the environment. So I am glad that one of the projects here has to

do with methods by which coal purifications can be performed. We are particularily happy that a research project is devoted to coal gasification and fluidized combustion. Certainly fluidized combustion is something on which India has done a lot of work and BHEL has now proceeded further to establish commercial development. At this stage it is of reasonably small size but there is no reason why this work cannot be expanded to take on very much larger sized units. This has a great virtue of having the ability to use different types of coal, of different sizes, in which sublimation is not required in all cases. We believe that the efficiency in energy, directly from coal will improve as a result of fluidized bed combustion.

Last, but not least, as a result of all this, the fluid materials will be of much better quality and the fluid process can be done much better. The use of fluidized bed combustion offers us very good opportunities.

There are many other areas that we would have much interest in. There are many situations in which we require inert gases. This may be particularily useful when we consider injection of such gases in our coal mines. There are also many other situations where we require inert gases. On the production of inert gases by pure nitrogen, gas air separation process is expensive and it is not often required for that purity. Similarily, use of other

material such as petroleum, and petroleum coke, to produce inert gases is also expensive. When we want very large quantities, there are opportunities to use coal combustion methods to produce inert gases. I am glad there are going to be discussions in this area.

We may be able to also identify new projects on an occassion such as this, for consideration. Apart from reviewing old projects, I hope you will allocate some time for this. Now, what could this be? Certainly we are very interested in the area of coal gasification with a very high recovery. These are going to depend on the adoption of very high temperatures and that produces a whole series of requirements; controls, the use of ceramics which can withstand this high temperature, the ability to operate combine cycle, the generation of power using very hot gases, recommending second grade level, and insuring all that can be done on a short notice - especially dust removal - so that the plants can operate well. This is an area in which work has been done in the US. There are new processes which use certain amounts of liquid matter as a method of having this temperature contained, and also removing sludge contents. I hope we can identify the ways and means of working on this type of project so that we do not work only on the conventional technologies and improvements, but also look for leap frogging into an entirely new dimension. These are quite possible because there are new

materials available, and we have good experience in ceramics, we have good experience in process control and microprocessors, and computer controls. All this would be highly suitable for Indian coals because of the advantages these fluidized processes offer.

Although much of our coal is free from sulfur, there are other deposits of coal which do contain sulfur, which is such a problem. Therefore, processes which are particularily helpful in dealing with these high sulfur coals and low sulfur coals to insure minimum effect on environment, may receive your special attention.

We also have special problems using coal powder, coal dust and so on. There are burners which use liquid forms by adding water or oil. BHEL has done some work in this area, as has our laboratory at Bhubaneswar. This is a good opportunity to look at our projects for the future, and the way in which these ideas can be of benefit to this country. I hope this type of work will be two-way traffic. We are not only considering inputs and assistance from USAID for work which would be of benefit to this country, but also for projects in which our expertise and experience may prove to be of interest to US Agencies. I think there should be some specific attention paid to active interest and greater cooperation with the United States. Recently, the US has expressed more interest in forms of cooperation. If there

are specific projects which would be of interest, or some problems which could be posed, and if they are taken up as joint projects in India, the whole interest in cooperation and joint projects will increase. Otherwise, it will always remain on one side a giver and the other a taker. But if there is enough of us it may not be in large measure but it may be in very specific measure. Our interest in future cooperation will increase and many people will be very strongly motivated because they are also involved as equals and committing to work elsewhere. There may be opportunities for such work which has wide implications to be applied elsewhere not only in India because science is common, there may be opportunities in USAID which handles worldwide interests in many countries. It may also be able to identify some output from this country which has some relevence in some other country. It may not be part of this USAID workshop, but nevertheless, when you meet you may get some impression of the kind of work USAID is supporting or assisting in other countries in the whole area of energy and alternate energy sources. It is possible that knowledge and experience they develop is of use to others without any particular committment.

I do hope the brief survey I have made on the possibility of future work and the review of our current work, will be of some value to you. We are aware that India's requirements for energy will increase and we are anxious to do a great deal in this area.

The Department of Non-Conventional Energy Sources has been supporting a number of new activities. They have not only been supporting activities in research but they have also been promoting the use of such devices and forms of energy. Therefore we have been able to produce some sort of special assistance and support whenever such uses occur. We also have other organizations which are now taking interest in this area. We have an organization called the Consul for the Application of Rural Technology, or CART. This is now funding a number of investigations, also assistance programs directed towards rural development . In the last two years we have had quite a lot of success in getting many local programs integrated by the application of technology. Otherwise there were many independent programs like employment programs or rural development programs. The input of good technology into those programs has increased the value of such programs.

I would like to quote our prime minister as saying that the very best of science should be used for every situation, and it's only when we have used very good science that we have been able to overcome problems and solve them. So many of the presentations will deal with our rural programs and village level programs, localized efforts, use of local materials, by-products, agricultural by-products, and other materials, or biomass. But merely because they are not in big corporations, and mined on and

big sums are not quoted, they should still receive the very best of science. I do hope this workshop will see that the kind of science and technology we are applying in the renewable energy sources and biomass programs are all of a very high quality.

Before I finish I must tell you that there is increasing interest in India in the application of biotechnology. It is particularily suited to us. There are, by and large, many biotechnology applications that do not require very large capital investments. They are managable in small factories or production units, or can be done in the field. We are now having very good success in the propagation of biomass by the use of tissue culture. We have made a specific plan and the banks have now come forward to support this program. Our national chemical laboratory is now involved with the rural development bank, and is propagating in three areas large quantities of quick growing species of biomass by supplying tissue culture methods, sapplings which can be planted and can be insured to grow. Similarily, we are looking at other species, especially other tree species, which are quick growing. We will do a great deal of work in this area. Then there are possibilities of incorporating new properties in alternate energy systems, such as improved nitrogen fixation and improved photosynthesis. We have had quite a lot of success in the use of photosynthetic improvers. I think some attention to rapid production of biomass will be of considerable

interest.

There are some other areas also in biomass conversion which will be available. There are some papers in the use of biomass derived materials. We have an institute of microbiotechnology which is attending to one particularily interesting problem for India - the conversion of cellulosic materials through the application of biochemical biological processes into liquid films. So far we have had great success. Brazil has been converting sugar cane, which is a soluable carbohydrate. We have very large quantities of nonsoluable carbohydrate materials and some method of bringing these into forms of energy will be useful. At the moment most of it is used as energy by direct burning but there may opportunities for conversion to alcohols.

We have considerable interest in such processes as photovoltaics and the production of hydrogen. We have had some recent success in photocatalysis and also in the conversion of air and water to the very important material, ammonia which is a photocatalytic process. But whether or not we have had successes there are indications by some new novel principles by which one may overcome the old problems and be able to get a reasonably efficient decent realized method of producing either hydrogen or ammonia by these processes. I mention these as examples of very high quality science which can be used for what might be called simple problems but yet which may have a very big effect. I do

hope this insistence on using very high science will continue in this workshop and we will be able to produce some new innovations as a result of these interactions.

I wish the workshop every success and I thank you once again for your kind invitation.

The next speaker is Mr. Sridhar. Mr. Sridhar is presently the Technical Director of Bharat Heavy Electricals, Ltd. He was General Manager of the Trichy plant from April 1976 and later became the Executive Director of BHEL's Overseas Projects Division. In 1981 he took charge as the Executive Director of the Trichy complex. He has been the Technical Director of BHEL since October of 1983 where he is responsible for the engineering, technology, R&D and planning of the company. Mr. Sridhar is a mechanical engineer from the University of Mysore, 1985. It is interesting to read that he was sent to US Steel of Gary and was there for one year in machine technology and machine shop administration.

Mr. Sridhar . . .

* * * * * * * *

STATUS OF MAJOR COAL BASED R&D PROGRAMMES IN BHEL

BY

M.K. SRIDHAR
DIRECTOR (TECHNICAL)
BHARAT HEAVY ELECTRICALS LTD.

During the last Government of India/USAID Workshop in February 1985, the status of major R&D Programmes pursued by BHEL was highlighted. Since then, we have made considerable progress in these R&D Projects. I would like to briefly touch upon a few of the major ongoing R&D Programmes.

1.0 ATMOSPHERIC PRESSURE FLUIDISED BED COMBUSTION BOILERS (AFBC)

1.1 Development Work

BHEL in their AFBC test facilities at Tiruchi have successfully tested various fuels. Combustion studies with mill rejects, Rice husk, Rice straw, various types of lignites, Washery tailings, Baggasse, Spent baggasse, Wood bark, Paper sludge and solvent residue have been conducted and operating parameters established. Based on this a number of technical and commercial proposals have been made including one 10 MW unit for burning rice straw in Punjab where this material is at present just burnt out in the fields. The main problem faced on this is for Rice Straw handling and feeding system. No experience is available in the country for this and efforts are being made to import the system.

Our joint project with USAID on "Evaluation of Free Board Performance in a Fluidised Bed Combustor" has reached a stage that the shake-down tests of the Test Facility will be started by end of December 1985. All the equipment and control systems have been installed. The Data Acquisition System imported with assistance from USAID has been assembled and tested, and will also be put in position as soon as a shake-down tests are completed and performance runs started for collecting data for the test programme already finalised in consultation with US experts.

BHEL has also taken up development of Air Heaters, both Tubular and Ceramic types, based on fluidised bed combustion of agro-wastes or low grade coals. The application of these are in Stirling Engines and Hot Air Turbines. Experiments are being planned with a 25 KW Stirling Engine, which is being imported by Department of Non-conventional Energy Sources (DNES). In addition, a demonstration plant is being planned with Hot Air Turbine of 0.5 to 3 MW rating.

1.2 Design Development

The erection of 10 MW unit for M/s. TISCO for burning washery rejects has started and the unit is expected to be commissioned in another six months time. During the last one year, BHEL has bagged two orders for 50 t/hr and 60 t/hr steam generating units for burning high ash sub-bituminons coals. Few more orders in this capacity range are expected shortly. With this progress, BHEL feels that it has established the confidence of its customers in atmospheric

pressure fluidised bed combustion boilers for burning various types of coals, for industrial applications. For burning baggasse, a proposal for setting up 2 x 35 t/hr high pressure boilers for generating process steam requirement, inhouse power requirement and surplus 8 MW power for a sugar mill of 2000 tons/day crushing capacity, is under active consideration of Department of Non-conventional Energy Sources, Government of India.

Design of our shell type fluidised bed combustion boilers in the range of 5 t/hr - 15 t/hr are gaining popularity in Indian market. Three parties have been lisensed so far to manufacture these boilers. One boiler of 5 t/hr capacity has already been sold by one of our licensees. Design of 30 MWe (150 t/hr steam) unit has been developed and subsequently got vetted by TVA engineers through USAID assistance. The modifications suggested by them have been incorporated and the design is ready for demonstration/commercialisation. To demonstrate 30 MWe FBC boiler for utility application, negotiations are being held with few parties and it is hoped a suitable site will be finalised very shortly. There is an obvious reluctance from prospective customers to accept new technology for a plant of such high ratings. Hence it becomes necessary for us to set up a demonstration unit with the financial assistance of National/International agencies. A proposal is being worked out for the above demonstration unit with the assistance of Government of India, USAID, BHEL and the customer.

1.3 Operational Experience

The 45 t/hr steam generating unit at Vizag has so far logged more than 11,000 hours of opertion. After about 1000 hrs of operation, the bed evaporator coils were replaced as there was heavy silica deposits inside the tubes due to poor water chemistry maintained by operators. This problem is not being faced now after maintaining the required water quality. After 4700 hrs of operation, the multi-hole distributor plate was replaced with a nozzle type distributor due to overheating of the multi-hole plate. This problem is not faced now. Coal impingment from side coal feed nozzle caused erosion of some bed coils. Subsequently, when coal feeding was changed to bottom feeding, this problem has not been encountered. The mechanical precipitator provided by customer for this facility is not giving the required collection efficiency. This may be replaced by the customer with an electrostatic precipitator or bag filters. Overall, the operational experience has been very satisfactory and we feel very confident of adopting this technology for industrial boilers.

2.0 COAL BASED COMBINED CYCLE POWER GENERATION

BHEL is working on development of coal based combined cycle power generation systems based on:

a) Coal gasification (both fixed bed and fluidised bed)

b) Pressurised fluidised bed combustion

The major development programmes are as follows:

2.1 Combined Cycle Demonstration Plant (CCDP)

A 6 MWe capacity CCDP Plant is being set up at Tiruchi complex. This is based on Fixed Bed coal gasification process. Phase I of this project, i.e. commissioning of the cycle with oil firing is planned for February 1986 and Phase-II with coal gas for May/June, 1986.

2.2 Pressurised Fluidised Bed Gasification

A Process Engineering Development Unit (PEDU) with a capacity to gasify 18 t/day of coal is planned for commissioning by March 1986. Based on the results from this unit, it is planned to develop a Fluidised Bed Gasifier of 150 t/day capacity to match the CCDP by December 1988.

2.3 Pressurised Fluidised Bed Combustion (PFBC)

A 200 mm dia PFBC model has been commissioned and a method of lighting up the bed with LPG has been established. Further tests on this are in progress. A test rig of diameter 420 mm is also being set up at Hyderabad. This will provide experimental data to design large size unit. It is planned to design a PFBC to burn 150 t/day to match the CCDP at Tiruchi by December 1988.

2.4 Demonstration Plant

To demonstrate the capability and the concept of coal based combined cycle, BHEL is working on a proposal to retrofit coal based Combined Cycle concept in a 60 MW conventional coal fired power plant. This system will be based on fixed bed gasification technology.

2.5 Hot Gas Cleanup System

Cold model studies have been conducted on Rotory Flow Cyclones. The data indicates that this may not clean the hot flue gas to the levels of dust required for present day Gas Turbines. Further work with Granular Bed Filters has been taken up and the test rig will be operated alongwith 420 mm dia PFBC test rig.

3.0 MAGNETO HYDRO DYNAMICS (MHD)

The 5 MW thermal MHD Pilot plant has been commissioned this year. One successful run with power generation for 40 minutes has been achieved. A 100 hr run is planned for this month. As a part of future development programme, development of combustors for direct combustion of coal is also planned.

4.0 OIL CONSERVATION IN PULVERISED COAL FIRED BOILERS

Petroleum fuels are now being used in pulverised coal fired boilers for startup, warm up and also for low load flame stabilisation. A large amount of precious oil is being used in the process in Indian power stations. To conserve Oil for the nation, BHEL has developed and demonstrated the following systems successfully:

a) Low calorific Value fuel gas system for Boiler startup, warmup and low load flame stabilisation;

b) High turn-down split coal Nozzle;

c) Direct Ignition of Pulverised Coal System

BHEL has successfully demonstrated the concept of using Low calorific value coal gas for pulverised coal fired boiler Ignition, warmup and low load flame stabilisation in one of their 35 t/hr wall fired boilers. With the financial assistance of Ministry of Energy, Government of India, the demonstration project for the 2 x 60 MW boilers at Ennore is in last stages of erection.

BHEL has successfully developed Direct Ignition of Pulverised Coal (DIPC) System which when installed, will eliminate most of the use of Oil for Warmup and low load flame stabilisation. BHEL has tested various Indian coals and found them suitable for DIPC System. We are negotiating with few utilities in India for installing this system for commercial operation.

5.0 NEW PROGRAMMES PROPOSAL WITH USAID ASSISTANCE

BHEL has prepared a detailed project proposal for setting up a 30 MW FCB demonstration plant, with part assistnce from USAID. I hope the USAID team which is attending this Workshop would be in a position to finalise their recommendations for this proposal, during this visit to India.

In addition to this, we plan to make proposals for USAID assistance as follows:

1) Setting up a Combustion and high temperature Research Institute,

2) Assistance from University of Tennesse Space Institute for development of Slagging Combustor for coal,

3) Design of 150 t/day coal combustion PFBC for retrofitting with CCDP.

BHEL has been getting excellent help and cooperation from USAID not only for all our joint projects, but also for counselling in other areas and in developing interaction with various US organisations. For this, we are extremely thankful to DNES, Government of India, USAID Mission in India, USAID Mission at Washington and more so to Mr. Daniel Bienstock, the USAID Coordinator for the Energy Programme. Dr. Bienstock has been sincere in helping us and has provided more than his share in this Programme. I am thankful to the organisers of this Workshop for giving me an opportunity to present this paper.

Thank you,

BHEL'S COAL BASED COMBINED CYCLE PROGRAMMES

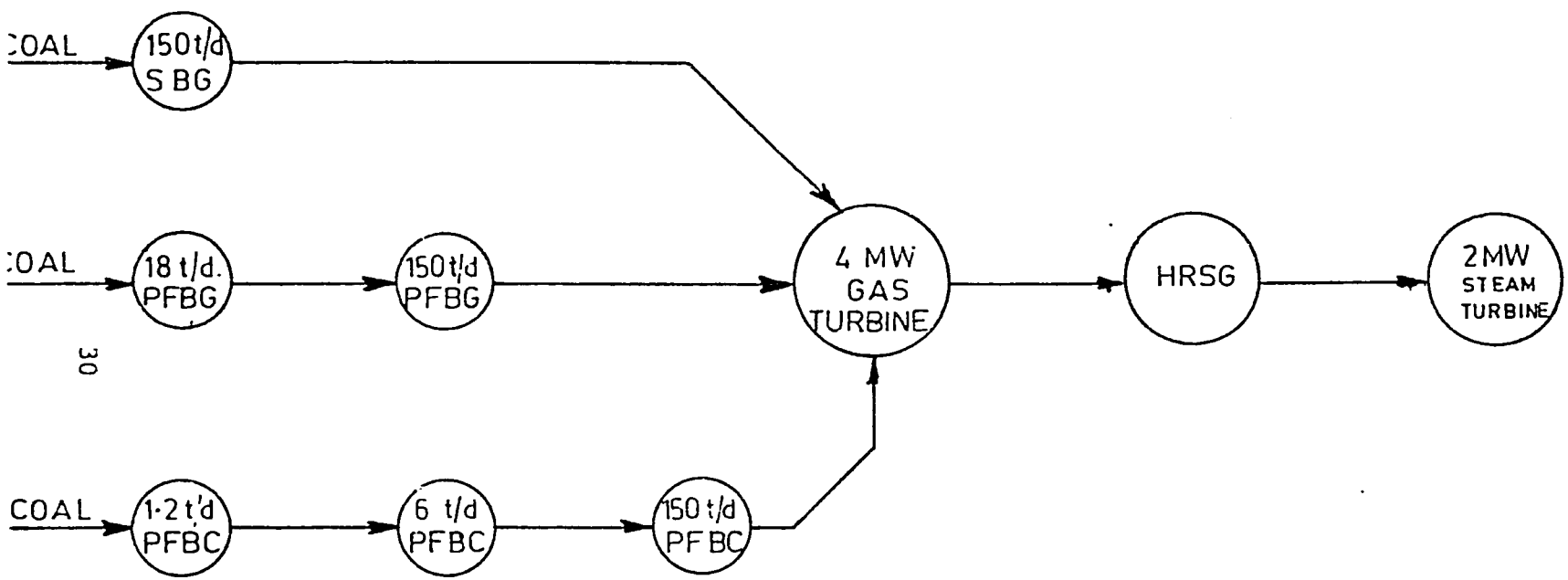

SBG - STATIC BED GASIFIER

PFBG - PRESSURISED FLUIDISED BED GASIFIER

PFBC - PRESSURISED FLUIDISED BED COMBUSTOR

LOW POWER OUTPUT COAL AGROWASTE BASED PROGRAMME

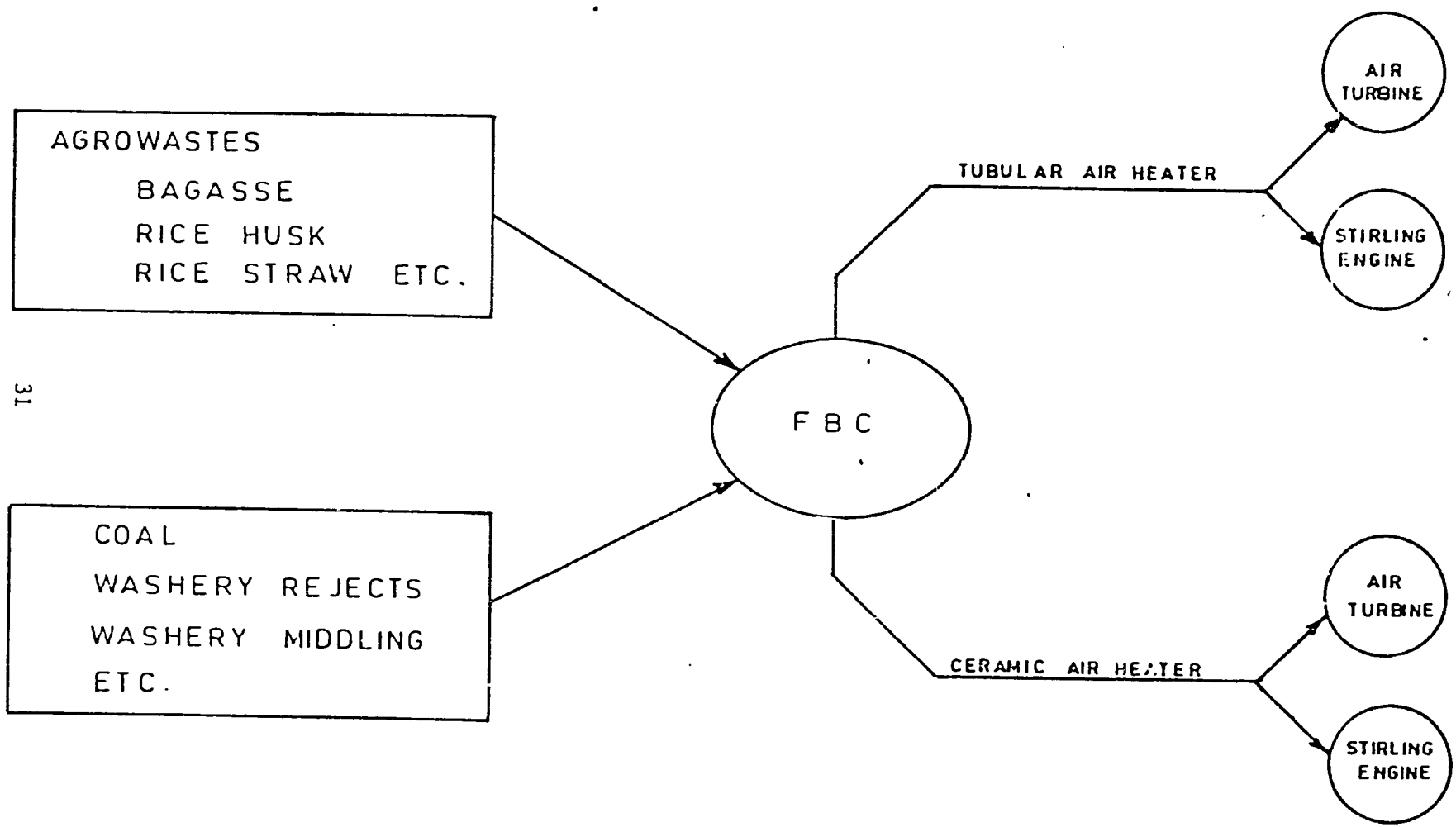

BHEL'S SLAGGING COMBUSTOR DEVELOPMENT PROGRAMME

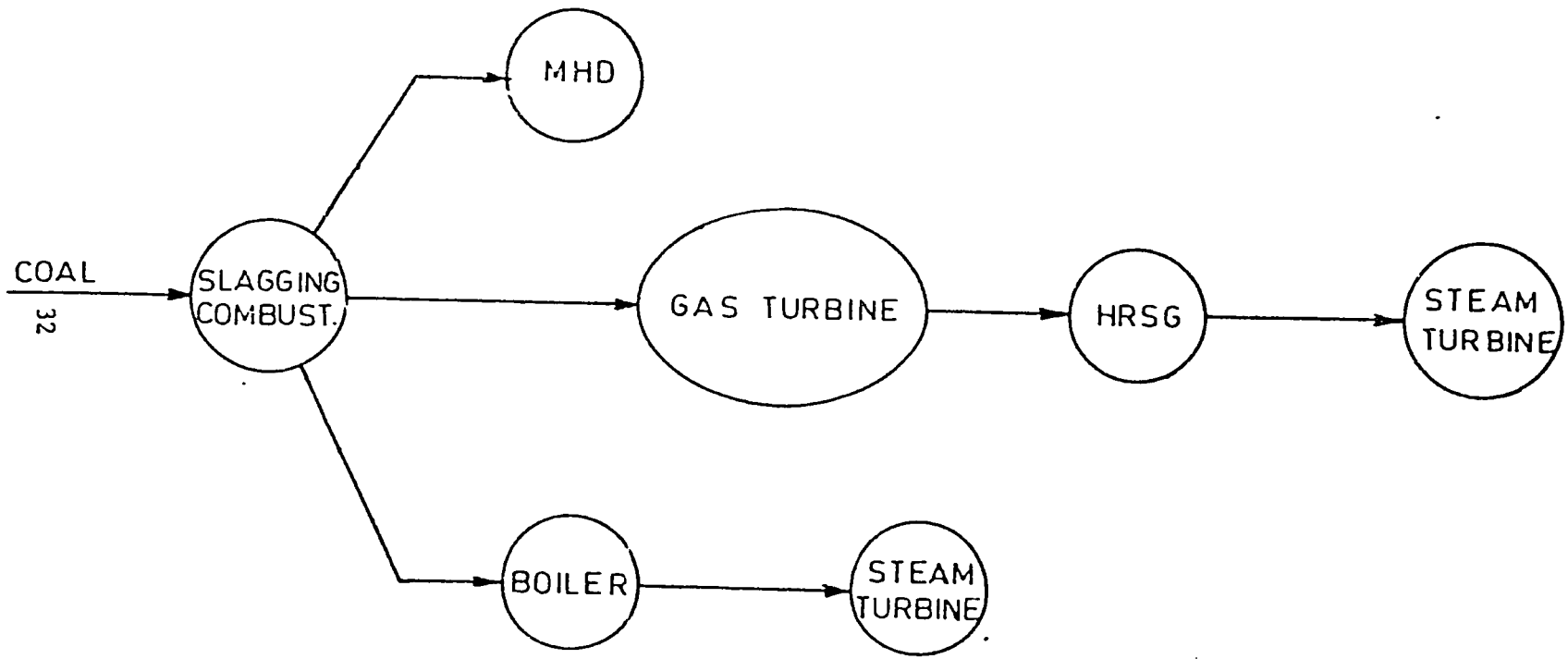

AWARD PRESENTATION

by

Mr. M.K. Sridhar, BHEL

to

Mr. Daniel Bienstock, PETC

Mr. Sridhar . . .

As I said earlier, Mr. Daniel Bienstock has been one of us, a part of BHEL. Without his active cooperation we would not have been able to develop this technology and be where we are. As a token of our appreciation of his work I would request Dr. Maheshwar Dayal to present a small memento to Mr. Bienstock.

Mr. Bienstock . . .

It is with deep humility that I accept this beautiful plaque. It comes at a time that is particularly gratifying to me as it is happening towards the end of my professional career. It was most fortunate that I had the opportunity to work on this program and to meet the various Indian scientists and engineers. They were most warm in their welcome and they were generous in their friendship. I hope that we will continue to have programs such as this in the future and that this will cement and bind the relationship of the people of India and the people of the United States, and bring together the two great democracies of this world. Thank you and God bless you all.

Dr. Maheshwar Dayal was one of the earliest of the nuclear engineers and scientists in this country and has been an international authority on energy matters. He was associated with the design and construction of the first atomic reactor in India in association with Dr. Bhaba. He was also in charge of India's first atomic power station in Tarapur. In 1974 he was appointed Minister of the Indian Embassy and representative to Unesco in Paris. He was elected President of the Science Commission of Unesco. He was appointed Secretary of the Commission for Additional Sources of Energy in March 1981, and was appointed Secretary to the Government of India and the Department of Non-Conventional Energy Resources and the Chairman of CASE on May 2, 1984. He is a Fellow of the National Academy of Sciences, a Fellow of the Institution of Energy, a General Secretary of the National Academy of Sciences and has many publications.

Dr. Dayal . . .

* * * * * * * *

M. Dayal

Mr. Bienstock, Mr. Sridhar, Mr. Balasubramanian, ladies and gentlemen. I am sorry that I delayed your coffee by a few minutes but I am sure that you will bear with me, because if I build on this calendar of speakers this morning, it would be most appropriate to speak now and have coffee later. You know one of the problems or preoccupations, rather, not so much a problem, that we live with these days is the parliament session and it is a very good thing - it keeps all of us on our toes, literally and this is a very positive thing, as it keeps one very busy. We have been told that while parliament is on, it has to take precedence over everything else. They can ask questions on any subject and usually they are quite helpful, but anyway, it has to be done, and one has to be in attendence there when it is required. And that is why, I must appologize that I was a little late in coming here because of some parliamentary work.

I must express my very great pleasure in participating in this workshop on Alternative Energy Resources Development, Biomass Conversion, and Coal Conversion. The two earlier workshops have helped significantly in implementing the projects in these areas. These forums also provide an opportunity to review the progress in the ongoing collaborative projects on biomass conversion and

coal gasification, as well as to discuss the areas of mutual interest for further collaboration. Our department, the department of Non-Conventional Energy Resources, is coordinating this program on the Indian side and on behalf of the department and the government of India, I would like to extend a very cordial welcome to all the participants, both from India and the USA, to this workshop.

Gasification of biomass, which includes a series of interlinking thermal chemical processes like drying, pyrolosis, oxidation and reduction, offers very promising possibilities to meet energy needs both for stationary and mobile purposes. Producer gas, or pyro gas can replace natural gas, gasoline or fuel oils used to make steam for generating electricity, fire boilers to provide heat for industries and homes, fuel internal combustion engines for a wide array of purposes, and provide basic chemical feedstocks such as ammonia for fertilizer and methanol.

In India the interest in this biomass gasification technology has grown very rapidly in the last two years or so. There has been significant progress in the area of both research and development, and actual production of newer varities of gasification engines, or gasifiers, and several applications of this technology are already being tried out in the field. As you all know, gasification, itself is not something totally new

because during the war, for example, large numbers of trucks, buses and other particularily mobile equipment was powered with producer gas. But this went out of fashion because of the very cheap, somewhat ridiculously low priced fuel that was available immediately after the war. And as a result of that, development of the technology had taken somewhat of a back seat. But this has again been revived now, when people have started realizing the problems of the conventional fuels, and newer technologies and methods which are being developed, and which have been assisted in a very considerable way here by our cooperative program between India and the United States. With these new developments, a number of much more economical and more advanced and better gasifiers have been developed and they are proving to be of very great interest for meeting both electric power, mechanical power, and mobile power requirements.

I will not go into very great detail here about the scope of some of these applications, except to say that since in India we have a very large agricultural population and agriculture is the main source of livelyhood for most of the people, there are both the resources for biomass which are available in plenty as well as very special conditions of dispersed rural populations not served by transmission networks, not served by systems of energy transportation which have to be catered for. So the need here and the applicability of some of these recent realized energy

forms such as biomass gasifiers, is much more than even in the industrialized countries which already have these systems, and for this reason the economic viability of some of these systems is going to be much quicker in our conditions than it is even in the industrialized countries because here if you have to deliver power to some area which is not served by a transmission line, you have to think also of the alternative investment of putting in a transmission line, the cost of the transmission itself, the losses involved in transmission, the reliability of the supply through extensive transmission lines, and all such types of problems. As against that, if you can provide a gasifier base or other renewable energy based power source right at the place where it is needed in the rural areas, then you find that the economics, even today are working out to be very, very interesting. In fact, this is one of the technologies which I feel can compete economically even today because we find that we can put biomass gasifier based power units at a cost per kilowatt that is even lower than the cost per kilowatt of very large centralized thermal power stations. On top of that, we avoid the investment required for transmission lines, we avoid the recurring cost involved in transmission, we avoid all the other problems I mentioned in regard to transmission lines.

We have also, fairly large resources to use for such gasifiers because there is very large amount of agricultural wastes

available in many parts of India, and at the same time there are possibilities of growing captive plantations, energy plantations, on waste, non-agriculture land which could also feed such biomass gasifiers. So, we have the possibilities of fueling many megawatts of power to the application by this biomass technology or for supplying a very large number of mechanical applications such as for pumps, which are very much needed in our countryside, particularily for providing drinking water or water for irrigation. It might interest you to know that there are an estimated 4 1/2 million electrical and 3 1/2 million diesel pumps already operating in the country. And the provision of power or diesel for these pumps is itself one of the very grave problems the administration has confronted, because both are in very short supply and we have to find alternatives for both electric power and diesel. This technology which you are discussing can be of very great use and very great importance.

I would like to mention other possibilities which I did refer to. such as for production of liquid fuels, production of methanol or ammonia, or other chemical products and these are also areas in which one could look into. The R&D activities in the area of gasifier based systems center, at the moment, around two major components; one is the generation of clean producer gas for thermal application, and the other is in regard to the question of the applications themselves, the question of solid movements

through the gasifiers and the effects of intensity and distribution of vibration in various parts of the gasifier assembly, hopper geometry, solid flow bottle necks, and ash disengagment characteristics.

At present, water is the main medium for cooling and cleaning the raw producer gas in order to have a more compact, maintenance free and reliable design that operates at a small pressure drop. There is need to initiate work on this aspect with the use of less water or no water if possible.

Fluidized bed gasification of certain biomass forms which are not suitable for downdraft type gasifiers even after briquetting is another priority area. Then, with respect to power generation, we need long term performance testing for reliability of engines working on producer gas, duel fuel operations, modification of injection systems for trouble free consistent operation and maximum possible replacement of other fuels or conventional fuels utilization of gas in turbo charged diesel engines, various other technological areas which merit a lot of attention. So there is, as of course in other technologies, scope for a lot of improvement, and further R&D. Life is never static in any of these areas. But these challenges are very exciting because the potential use is very great and is already coming to the stage where it could be applied on a very large scale.

I would also like to mention in passing the very interesting work that is being done with regard to coal gasification and the development of the fluidized bed boilers as part of our ongoing program, in which there has been very good interaction between Indian and United States scientists. Many of these applications and developments of fallout and many other related areas of technologies, applications for using other types of fuels, a better understanding of the characteristics of coal combustion systems, boiler technologies, and many other component development aspects which have also come out. Therefore, I hope very much, that in this workshop we will be able to carry forward the work that has been so well begun jointly between our two countries and I do hope this will lead to an even bigger program of Indo/U.S. cooperation in the next two years, because the foundation that has been laid has been very good and has been very positive and has yielded very good results. It is entirely possible to build on this on a much bigger scale, to expand it several fold, and to start applying the results of this cooperation for actual use on a large scale.

Thank you very much.

The next speaker, Mr. Balasubramaniam, is Vice President of Hindustan, Brown-Boveri and Barota, and he is involved with AIEI. He is an electrical engineering graduate, post graduate in power engineering, and a member of the Institution of Engineers of India. He has been with Brown-Boveri for the last 25 years in the fields of switched-gear design, development and manufacture.

Mr. Balasubramaniam . . .

* * * * * * * *

ADDRESS OF MR. V BALASUBRAMANIAN, AIEI AT THE USAID/GOI WORKSHOP ON ALTERNATIVE ENERGY RESOURCES: DECEMBER 5, 1985: NEW DELHI

It gives me great pleasure to be present here this morning and to address this distinguished gathering. May I, on my personal behalf and on behalf of AIEI, extend our very warm greetings to all the delegates. I have been allotted a slot in this morning's programme to give you an overview of the power plant equipment industry in the country and its progress, development and achievements over the past 4 decades.

Why are we talking of alternate energy resources and their development in the Indian context ? To answer this question one needs to view, in perspective, the energy scene in India and particularly what we are heading for by the turn of the century. Let me throw up a few indicative figures for you to look at:

1) The total energy demand by the year 2000 is expected to be of the order of 1000 Million Tonnes of Coal Replacement (MTCR). Of this, coal requirements would be 265 MTCR, Oil 356 MTCR and Electricity 396 MTCR.

2) To match this level of energy consumption we would require:

   272 million tonnes of Coal
   70 million tonnes of Oil
   458 Twh of Electricity

3) Beyond the year 2000, the anticipated growth in energy consumption is about 10%.

This is the magnitude of the problem we are grappling with.

There is yet another dimension to the problem and this relates to per capita consumption of energy. Our national average is only 178 kgs of coal equivalent of commercial energy and 137 kgs of coal equivalent of non-commercial energy against an average of 6360 kgs.

for developed countries and 449 kgs for developing countries. If our energy growth is to even come anywhere near the international levels, we would most definitely be faced with an energy crunch.

To continue my presentation on a few indicative figures, let me turn to the pressures and demands of electrical energy:

i) Energy consumption in India is up 14 times in 3 decades
ii) Electricity growth rate has been 10% per annum on the average
iii) Accelerating demand from the agricultural sector and the effect of multi-cropping.

At the rate we are going and with the constraint of resources, I am afraid this country is going to see a continuing and major shortfall between the demand and the supply for electrical energy. It is, therefore, not a day too soon that we look at all other alternate sources of energy and gear ourselves to meet our fast expanding energy requirements.

It is in this context that I welcome this Workshop which would discuss key areas of coal conversion and bio-mass conversion. The Department of Non-Conventional Energy Sources is already in the midst of a very major programme for the development of non-conventional energy sources and, over the years, we shall be able to alleviate some of the problems that we are having to cope with.

Since my brief this morning is to trace the capabilities of the Indian heavy electrical industry, let me begin by stating that we have indeed come a long way. Our capabilities in the heavy electrical field comprise a wide range of generation, transmission and distribution equipment and services. The basic items produced by this segment of industry cover steam and hydraulic turbines and generators, boilers, transformers, switchgears and controls. Some of our outstanding companies are household names not only in India but abroad and many have excellent and highly successful technology links with world leaders. To mention only a few :

- Bharat Heavy Electricals Limited
- Crompton Greaves Limited
- Siemens India Limited
- Hindustan Brown Boveri Limited

- General Electric Co. of India Ltd
- English Electric Company Ltd
- Kirloskar Electric Company Ltd
- Jyoti Limited
- Asea India Limited.

There are nearly 200 Companies engaged in the manufacture of electrical equipment, many having access to foreign technology adapted for local usage.

It is commendable that the electrical industry in India has, within a short span of 30 years, risen to the occasion by developing capability to manufacture and deliver 90 - 95% of the requirements of power generation, transmission and distribution equipment indigenously. The technical tie-ups with the foreign manufacturers have helped in introduction of the latest technologies whenever these have become available and requiring only adaptations to the local conditions. Since the above defines broadly the competence of the Indian Electrical Industry, I am not digressing into the details of which Company manufacturers what products as this is a continuous process. Of course in certain specific areas like instrumentation and control, HVDC transmission etc. acquisition and absorbtion of new technologies may be necessary. With close interaction with the user, I am quite confident that the electrical industry will be able to meet the demands of the user industry in these areas also.

It is interesting to note that a number of Companies engaged in electrical equipment manufacture have also in the recent past diversified into renewable energy areas. This also seems to fit into the pattern of Government's thinking where recently a single Ministry of Energy has been created which encompasses not only electrical power but also other sources of energy like renewables.

It appears to be that the in-depth knowledge of power - the availability as well as nonavailability, the pattern of consumption and the consumer needs - are the key elements which has drawn the Electrical Equipment manufacturers to thrust into renewables and renewables equipment manufacture. This synthesis will certainly go a long way in an integrated development of the energy requirement of the country as a whole.

In the coming decades, I see four distinct opportunities and challenges which the electrical industry will have to grab in:

- improvement of the plant performance and reliability & efficient use
- conservation/of energy and equipment needed for it
- modernisation of existing plants
- use of renewables and renewable equipment manufacture.

In the first area of improving the plant performance and reliability, the Utilities as well as the manufacturers will have to pool their resources and closely interact with each other to achieve the results. The operational parameters have to be clearly spelt out and the ability of suppliers to meet with these irrespective of the cost factor, will be a key to this. This subject is currently receiving attention of all the authorities concerned and I do hope that lasting solutions will be found.

Energy conservation must get very high priority in scheme of things. Some of the comparisons of energy consumption per unit of output of some basic materials, are quite revealing - e.g.

- crude steel: the lowest energy consumption is in the range of 180, average around 500 whereas the Indian figure is 1160.
- Similarly, for cement, the lowest 90, average of about 120 and India 170.
- For aluminium, lowest 950, average about 1400 and India 2300.

While there may be some variations in these figures because of assumptions and mode of calculations, the wide variance clearly indicates vast scope which exists in reducing the energy consumption per unit which may need change of processes, methods and associated actions.

Modernisation, which is partly covered under the title of improvement of plant performances, involves more sophisticated controls using microprocessors and other electronic instrumentation. In India we have already announced a massive programme and I am sure the results will be seen within the next few years.

Let me now turn to the subject of the renewables. It is a potential area for entry by the electrical engineering industry. India has embarked on a massive programme of development of non-conventional and renewable energy sources. By the year 2000 A.D a significant percentage of the country's needs will be met from renewable sources. There is particular relevance and scope for coal conversion and bio-mass conversion. In the area of coal one has to very effectively grapple with the problem of high ash and fluidised bed combustion technology could be one answer. But I believe that a Workshop like this must debate on other technologies for utilisation of low grade coal. To us, in India, this would be a subject of tremendous importance.

Related to the utilisation of coal is the crucial subject of environmental protection and pollution control. Let this Workshop not forget this important aspect. In develping any new equipment, design or technologies, we must integrate into the system adequate ways and means of controlling pollution. This is a challenge for technologists and a challenge which can be met through adequate planning and design in the initial stage itself.

We, in AIEI, have had an opportunity to work very closely with USAID and are, in fact, jointly implementing a programme in the area of energy conservation. We believe this to be one of the most important elements in our long term energy planning. At the rate that this country's energy demand is growing, the need for energy conservation becomes vital. Indeed, the Energy Committee of our Association has taken a conscious decision that it will concentrate entirely on the subject of energy conservation over the next 3 years.

Let me end by making a plea for the scientists, technologists and policy makers present here to discuss new methods, processes and systems bearing in view not only the capabilities to use different raw materials but also ensuring maximum conservation of energy and protection of the environment.

I would like to thank the organisers of this Workshop for giving me this opportunity to share some of my perspectives and thoughts with you.

Thank you

STATUS OF THE FLUIDIZED BED TECHNOLOGY IN THE UNITED STATES

James W. Bass, III
E. David Daugherty

Tennessee Valley Authority
Chattanooga, Tennessee, U.S.A.

THIRD WORKSHOP ON ALTERNATIVE ENERGY RESOURCES AND
DEVELOPMENT COAL CONVERSION AND BIOMASS CONVERSION
SPONSORED BY U.S. AGENCY FOR INTERNATIONAL DEVELOPMENT AND
THE GOVERNMENT OF INDIA
NEW DELHI, INDIA
DECEMBER 5-7, 1985

STATUS OF THE FLUIDIZED BED TECHNOLOGY IN THE UNITED STATES

James W. Bass III
E. David Daugherty
Tennessee Valley Authority
Chattanooga, Tennessee 37402

ABSTRACT

For the past several years, the U.S. electric utility industry has been developing atmospheric fluidized bed combustion (AFBC) Considerable progress has been made at the Tennessee Valley Authority's (TVA) 20-MW AFBC Pilot Plant at Paducah, Kentucky. Test program successes and aggressive boiler vendor marketing have led to three utility demonstration projects: TVA is repowering a unit at the Shawnee Steam Plant in Kentucky with a new AFBC boiler; Northern States Power (NSP) is retrofitting a boiler at the Black Dog unit in Minnesota; and Colorado-Ute Electric Association is uprating a unit at the Nucla Station in Colorado by adding a new circulating AFBC boiler.

This paper provides a summary of the 20-MW Pilot Plant test results and a description of the demonstration project at TVA. In addition, it presents a brief description of the demonstration projects at NSP and Colorado-Ute.

STATUS OF THE FLUIDIZED BED TECHNOLOGY IN THE UNITED STATES

INTRODUCTION

The United States' electric utility industry is facing a major challenge to develop an economically viable means to generate electricity within the confines of the Clean Air Act of 1970 and subsequent amendments. One promising technology to meet this challenge is atmospheric fluidized bed combustion (AFBC). This technology is an advanced coal combustion process that provides a near-term alternative to conventional pulverized coal steam plants with flue gas desulfurization systems. AFBC has the ability to control SO_2 and NO_x without these add-on systems. The attractiveness of AFBC has been confirmed at a number of industrial units put in service in recent years. However, there are still developmental requirements that must be further evaluated before AFBC can be commercialized for utility applications. Some of these areas are: higher efficiency requirements, different emissions regulations, unique turndown and load-following constraints, higher steam temperatures and pressures, and stringent reliability/availability constraints. To achieve commercial acceptance by the electric utility industry, AFBC performance, reliability, and economics need to be demonstrated on a utility scale.

A major step leading to a utility-scale demonstration of AFBC was undertaken by the Tennessee Valley Authority (TVA) with the construction of a $68 million, 20-MW AFBC Pilot Plant (Pilot Plant) at the Shawnee Steam Plant in Paducah, Kentucky. This and other research and development efforts have lead to the initiation of three AFBC demonstration projects in the U.S.

TVA and several cofunders have joined to form a demonstration project that involves the installation of a new 160-MW AFBC boiler at an existing plant. The bubbling bed AFBC will burn high-sulfur, high-ash coal available from nearby mines. The new AFBC boiler will replace the existing pulverized coal boiler and will utilize the existing turbogenerator at the station. Construction began in 1985 and operation is scheduled to begin in 1988.

Another AFBC demonstration plant project is being carried out by Northern States Power (NSP) and three cosponsors. This demonstration will convert one of NSP's existing pulverized coal (PC) fired units to AFBC operation. The 125-MW AFBC retrofit will be located at the Black Dog Plant near Minneapolis, Minnesota. This bubbling bed AFBC boiler will burn a low-sulfur, high-moisture coal that had required a derating of the existing pulverized coal boiler. Site preparation was initiated in 1984 with operation expected in mid-1986.

A third demonstration, which involves utilizing circulating fluidized bed combustion (CFBC), is being hosted by Colorado-Ute Electric Association. This project involves uprating an existing 36-MW plant to 110-MW by adding a CFBC boiler and an extraction turbine at Colordao-Ute's Nucla Station. The new CFBC boiler will burn a low-sulfur, high-ash fuel that is available at low cost. Construction started in 1985, and operation is scheduled to begin in August 1987.

TVA'S 20-MW AFBC PILOT PLANT

TVA took a major step toward a utility-scale demonstration of boiler technology by constructing a 20-MW pilot plant at its Shawnee Steam Plant near Paducah, Kentucky. The unit is operating successfully in a test program cosponsored by the Electric Power Research Institute (EPRI). TVA operates the facility, analyzes and interprets the data, and performs other activities related to the operational testing of the Pilot Plant.

The Pilot Plant is an intermediate step between the small process development research units and commercial size utility demonstration power plants. Its size, design, and flexibility allow for comparing and screening various options for feeding, recycle, and control on commercial size equipment. The basic unit arrangement is shown in Figure 1.

Both underbed pneumatic and overbed spreader coal feed systems are provided. The bed area is large enough to simulate commercial unit process and operating characteristics. The fly ash reinjection system has the capability to recycle either cooled or uncooled material at up to five times the coal feed rate. Water and steam circuitry and parameters simulate utility conditions. Table 1 summarizes the design parameters incorporated into the unit for testing.

The Pilot Plant has operated for over 12,000 hours since the first coal fire in May 1982. Over 9,500 hours of testing were with underbed coal feeding, while 1,500 hours were with overbed coal feeding. The coal burned has been high-sulfur Kentucky No. 9. Two local limestones have been tested.

Table 1
20-MW DESIGN PARAMETERS

	Design	Flexibility
Bed area (ft^2)	216	58,108,166,216,288
Superficial velocity (fps)	8	4, 8, or 12
Bed temperature (^oF)	1,550	to 1,650
Bed depth (ft)	4	to 6
Coal feed rate (lb/hr)	12,000	to 22,000
Steam capacity (lb/hr)	111,200	to 170,000
Outlet pressure (psi)	2,400	2,400
Outlet temperature (^oF)	1,000	1,000

Process performance tests have been encouraging. Results for some key parameters include the following:

- Combustion efficiency improves significantly with recycle of fly ash from the mechanical cyclone collectors back to the fluidized bed. Figure 2 shows combustion efficiency versus recycle ratio (defined as the ratio of cyclone catch fed back to the bed to the rate of fresh coal fed) for the underbed and overbed tests. Comparable combustion efficiencies of over 97 percent can be attained with both underbed feed and overbed feed at a recycle ratio of 2 to 2.5. However, combustion efficiency drops considerably when feeding unwashed coal overbed with significant fines content because the coal fines do not get into the bed and, therefore, have less time to burn before being carried out of the combustor.

- Sulfur capture efficiency depends primarily on the amount of sorbent (limestone) in the bed, its surface area, and residence time (time in the unit when reactions can take place). For economic reasons, the

amount of fresh limestone being fed must be kept as low as possible; therefore, the best option for lowering SO_2 emissions is to recycle the unsulfated sorbent that would be lost to disposal. Figure 3 shows SO_2 retention versus Ca/S (molar ratio of calcium to sulfur being fed) for various cyclone catch recycle ratios for the underbed feed tests and overbed feed tests. Ninety-percent retention can be reached using underbed feed with a Ca/S of 2 to 2.5 and recycle ratio of 2 to 2.5. The overbed washed coal results show the same trend with only a slight reduction in performance. Overbed feed of unwashed coal shows poor performance and the need to limit and normalize the amount of coal fines. A substantial amount of SO_2 forms by fines burning in the freeboard where there is not enough residence time for good performance. The washed coal provides much more stable operation and better performance because of the control on the amount of fines.

- NO_x emissions are below environmental limits (.6 lb/MBtu) for all conditions tested. Due to the low combustion temperatures in AFBC, the generation of thermal NO_x is insignificant. Figure 4 shows how NO_x emissions are dependent upon the amount of excess oxygen in the flue gas. Note that at the expected 3 percent excess O_2 operating level, emissions are approximately 0.25 lb/MBtu.

One objective of the test program is to evaluate load control methods. At the AFBC Pilot Plant, four methods have been tested: velocity turndown, recycle rate, bed slumping, and bed inventory control. Approximately 20 percent turndown has been achieved by decreasing air velocity to drop level and expose tubes (velocity turndown). Combining recycle feed rate variations with velocity turndown has reduced loads up to 45 percent. The

ability to cut off air flow to a bed compartment (bed slumping) and restart bed compartments has been demonstrated without problems, and when combined with velocity turndown, 65 percent load reduction has been achieved. Regulating the bed mass in the boiler to control the bed height (bed inventory control) provides quick response to short-term load reductions, but its application appears limited due to increased capital costs and slow response when increasing load.

The Pilot Plant has demonstrated that the AFBC systems are capable of supporting utility operation. The boiler has operated reliably with no technology-related forced outages, and there have not been any major unresolved AFBC system-related problems. There has not been a single boiler tube failure. Corrosion has not been experienced, and erosion rates have been acceptable. The critical feed and disposal systems' components have been verified, and areas for further refinement have been identified. Operation of the Pilot Plant has provided design engineers with a data base of operating experience and maintenance history, which has benefited the design, equipment selection, and maintenance planning of future utility plants.

160-MW AFBC DEMONSTRATION PLANT AT SHAWNEE

A major step in the demonstration of fluidized bed combustion in a utility environment is being undertaken with the construction of a 160-MW AFBC Demonstration Plant at the TVA's Shawnee Fossil Plant near Paducah, Kentucky. EPRI, the Commonwealth of Kentucky (Kentucky), Duke Power Company (Duke), TVA, and Combustion Engineering (C-E), and the Atmospheric

Fluidized Bed Development Corporation (formed by other participants including coal companies, other utilities, and railroads) have joined together to fund this demonstration plant.

TVA's Shawnee Steam Plant is composed of 10 pulverized coal units of identical size and design. The AFBC boiler will be installed in a new powerhouse adjacent to the existing powerhouse as a replacement for the unit 10 boiler. An artist's rendition of the facility is shown in Figure 5. It will utilize the unit 10 turbine generator set and be nominally rated at 160-MW. The existing boiler will not be dismantled but will remain online during the construction of the add-on AFBC boiler. To minimize cost, existing auxiliary equipment will be used wherever possible. A list of the existing equipment and new equipment is provided in Table 2.

The steam generator and accessories will be built by C-E. A schematic of the boiler and related equipment is provided in Figure 6. The steam generator will be a balanced draft, drum-type AFBC boiler. It will supply superheated steam to the existing high pressure turbine at 1848 psia, 1003°F and reheated steam to the low pressure turbine at 475 psia, 1003°F. The bubbling bed will be divided by windbox compartments into 12 firing zones that can be fired independently to achieve at least 3 to 1 turndown. Boiling and final superheat surfaces will be located in the bed. Primary superheat, reheat, and economizer surface will be in the convection pass. The boiler will use a combination top- and bottom-supported design with an expansion joint in the freeboard section.

Solids entrained in the flue gas will be collected upstream of the air-heater with mechanical cyclone separators and a portion recycled to the

bubbling bed. Flue gas will exit the cyclones and pass through a fabric bag filter before going to the stack. A regenerative air heater will be provided with flexibility for 230 to 270°F exit gas temperatures.

Boiler efficiency is guaranteed to be 87.53 percent at maximum steam production with a ratio of 2.8 pounds of coal to 1 pound of limestone, based on the design fuel and limestone.

Table 2.
EQUIPMENT UTILIZATION AT TVA DEMONSTRATION

New	Existing
AFBC Add-on Boiler and Auxiliary Equipment	Turbine
FD Fans	Generator
Air Heater	Condenser
Mechanical Dust Collectors and Char-Handling System	Water Treatment System
Spent Bed-Material Disposal System	Boiler Feedwater Pumps
Limestone-Handling System	Condensate Pumps
Coal-Handling System (Boiler Building)	Main Transformers
Coal/Limestone Feed System	Common Auxiliary Transformer
Emergency Boiler Feedwater Pump	Circulating Water Pumps
Control System	ID Fans
Boiler Building	Baghouse and Fly-Ash Handling System
Station Service Transformer	Flue-Gas Chimney
	Coal Handling

The existing coal handling system will be used to bring the coal to a new conveyor system that will transport the coal into the AFBC boiler building. The coal will be crushed and sized and dried with flue gas before going to the feed system silos. The design basis coal is Kentucky No. 9, a typical eastern high-sulfur, high-ash, bituminous coal.

A complete limestone handling system will be added and will include a receiving hopper, crusher, and a screening system. Redundant crushing and screening systems will be provided for reliability. Once crushed to the appropriate size, limestone will be conveyed to the AFBC boiler building and stored in silos. The limestone can be fed underbed with the coal or overbed via a separate operating feed system. The design basis limestone will be similar in reactivity to limestone found in the area.

The boiler will have an underbed feed system for both coal and limestone. One of the concerns associated with this type system has been the plugging and erosion of various system components. To resolve these concerns, C-E has developed a new feed system. This system has been installed at the Pilot Plant and successful confirmation testing has been in progress since mid-January 1985. This feed system will provide a constant and evenly distributed stream of coal and limestone to the AFBC boiler.

The major milestones for the project are identified in Table 3. Site preparation is underway, and startup is scheduled for mid-1988.

Table 3
MAJOR MILESTONES

Activity	Date
Complete integrated project construction schedule	4/15/85
Complete conceptual design	7/1/85
Complete detailed integrated construction schedule	8/15/85
Begin site preparation	9/1/85
Submit air permit application	10/15/85
Release boiler for fabrication	11/1/85
Start construction	4/1/86
First fire and begin test plan	5/1/88
Steam to turbine	7/1/88
Begin commercial demonstration	6/1/90
Begin commercial operation	6/1/92

A 4-year test program consisting of shakedown, parametric testing is planned. The major objectives of the test program are:

- To demonstrate a large-scale AFBC unit's operating, economic, and environmental performance.

- To demonstrate plant capability and performance for load following and shift operation.

- To demonstrate a large-scale AFBC plant in a commercial utility environment.

- Test a wide range of principal coals available to U.S. utilities.

A 6-year commercial operations period will follow the test program, through which time TVA is committed to provide plant performance and reliability data to all project participants.

The project, including the test program, is estimated to cost $205 million. A total of $236 million has been committed to the project as follows:

TVA	$40 Million
Duke	10
Kentucky	10
EPRI	75
C-E	20
AFBDC	51
DOE	30

125-MW AFBC DEMONSTRATION PLANT AT MINNEAPOLIS, MINNESOTA

In the mid-1970s, NSP began an extensive program to extend the useful life of a number of its older and smaller fossil power plants. In late 1981, NSP's 15-MW French Island Plant, a 1948 vintage stoker coal-fired boiler, was converted from oil-fired peaking to AFBC waste wood-fired cyclic operation. As a direct result of the success of this plant, NSP began to investigate the conversion of an existing pulverized coal unit to AFBC. Unit 2 at the Black Dog Station, located near Minneapolis, Minnesota, was chosen.

The project involves the upgrade and refurbishment of the existing unit 2 equipment and system (including the turbine-generator unit, condensate and feedwater systems, particulate removal systems, and the control system). Black Dog unit 2 was originally rated at 100 MW. The unit was switched from firing a blend of bituminous coal and low-sulfur subbituminous coal in the early 1970s in order to reduce SO_2 emissions. Since the fuel switch, the unit was derated to 85-MW and availability was reduced. The AFBC retrofit will allow NSP to increase the boiler capacity to 125-MW even though firing only the lower cost subbituminous coal.

The existing coal-handling system and structural steel will be modified to accommodate the new AFBC systems. New limestone receiving, handling, storage, and feeding systems will be added. The existing boiler and air heater systems will be retrofitted to the AFBC system configuration (See Figure 7). The bottom half of the furnace is being replaced by three fluidized bed cells. The beds will contain boiling and superheat surface.

A regenerative air heater will be used. An existing electrostatic precipitation (ESP) will be supplemented by a second ESP for final particulate removal. The unit is being designed with an overbed coal and limestone feed system and will burn Sarpy Creek coal as well as other subbituminous coals and lignites.

Demolition and refurbishment work on the existing unit began by NSP and Stone & Webster in September 1984. Construction of the new AFBC boiler retrofit by Foster Wheeler began in March 1985 with initial operation scheduled in mid-1986.

A 3-year test program is presently envisioned and may include demonstration of co-firing refuse-derived fuel and petroleum coke as well as demonstration of eastern coals in cooperation with EPRI, the Consolidated Edison Company of New York, and the Empire State Electric Energy Research Corporation. The cost estimate for the project when completed and ready for operation and testing is $55 million.

110-MW CFBC DEMONSTRATION PLANT AT NUCLA STATION

Colorado-Ute is hosting the third AFBC demonstration project. In 1983, Colorado-Ute and EPRI undertook a cooperative design and experimental program to establish a solid technical basis for a CFBC project. Tests at two circulating AFBC pilot units showed that Colorado-Ute's high-ash, subbituminous coal was easy to burn in a CFBC boiler and that good SO_2 control was also easy to achieve. Design studies carried out by C-E/ Lurgi Chemie and Pyropower/Ahlstrom resulted in designs that were judged to have low technical risks for economic performance on the design coal and that appeared to be capable of providing valid design data for more difficult coals that might be tested. Thus, the Colorado-Ute project was chosen for funding support by EPRI.

The project involves adding a new CFBC boiler and additional turbine generator capacity to a retired 36-MW power station to extend its output to 110-MW.

The new CFBC boiler (see Figure 8) will consist of two independent combustion chambers each with its own fuel and air supply, ash removal system, and structural support. Two refractory-lined hot cyclones are provided downstream from each combustor for capture and recirculation of unburned carbon and unused limestone to the combustor. Flue gas passes through the cyclones, convection pass heat transfer sections, tubular air heater, and fabric filters before exiting to the stack.

In addition to EPRI and Colorado-Ute, Southern California Edison, Salt River Project, Public Service Company of Colorado, and Peabody Coal have committed financial support to this $110 million project. Pyropower/

Ahlstrom was awarded the boiler contract in early October 1984. Construction completion is scheduled for August 1987. Colorado-Ute will operate the unit for two years in accordance with an EPRI-specified test program. Testing will include scale validation, turndown and load following, and fuel flexibility.

SUMMARY OF DEMONSTRATION PROJECTS

Table 4 provides a summary comparison of the three demonstration projects. Each project has a unique set of parameters that reflects individual utility's needs as well as the diversity of design options available with AFBC.

TVA wanted to prove scalability of AFBC to large (up to 500-MW) units. Furthermore, TVA required that the unit meet SO_2 emission limits with a high-sulfur bituminous coal. The first requirement effectively dictated bubbling bed technology--the second required underbed feed with recycle.

NSP wanted to retrofit and upgrade an existing PC boiler while burning a low-sulfur, subbituminous fuel. The first requirement dictated a bubbling bed design. However, the less stringent SO_2 removal requirements and the high volatility of the coal permitted use of the mechanically simpler overbed feed system.

Colorado-Ute had no interest in extremely large units and wished to burn a very high-ash fuel while maintaining broad flexibility for future fuel supply. The circulating bed design appeared to be the most economical answer to their needs.

Table 4
SUMMARY COMPARISON OF U.S. DEMONSTRATIONS

	TVA	NSP	Colorado-Ute
Location	Paducah, KY	Minneapolis, MN	Nucla, CO
Size, MW(e)	160	125	110
FBC Type	Bubbling	Bubbling	Circulating
Supplier	C-E	FW	Pyropower/ Ahlstrom
Scope	Add-On Boiler	Boiler Conversion	Add-on Boiler and Turbine Generator
Coal	High Sulfur Bituminous	Low Sulfur Bituminous	Low Sulfur, High Ash Bituminous
Startup	1988	1986	1987
Steam Conditions	Reheat	No Reheat	No Reheat
Feed system	Underbed	Overbed	In-Bed
Air Heater	Regenerative	Regenerative	Tubular
Dust Collector	Baghouse (Reverse Air)	ESP	Baghouse (Shake-Deflate
Structural Design	Top and Bottom Support	Top and Bottom Support	Top Support
Dispatch Schedule	Base Load, Some Cycling	2-Shift, 5-Day Cycle	Baseload
Startups Per Year	20	250	Less Than 10

SUMMARY

The successful operation and performance of small AFBC units has spurred the development of three complimentary demonstration projects that will allow the utility industry to determine that AFBC systems can function reliably and economically. Once the technology is demonstrated, there are three ways in which AFBC can penetrate the utility industry: new capacity, replacement capacity, and conversion to coal.

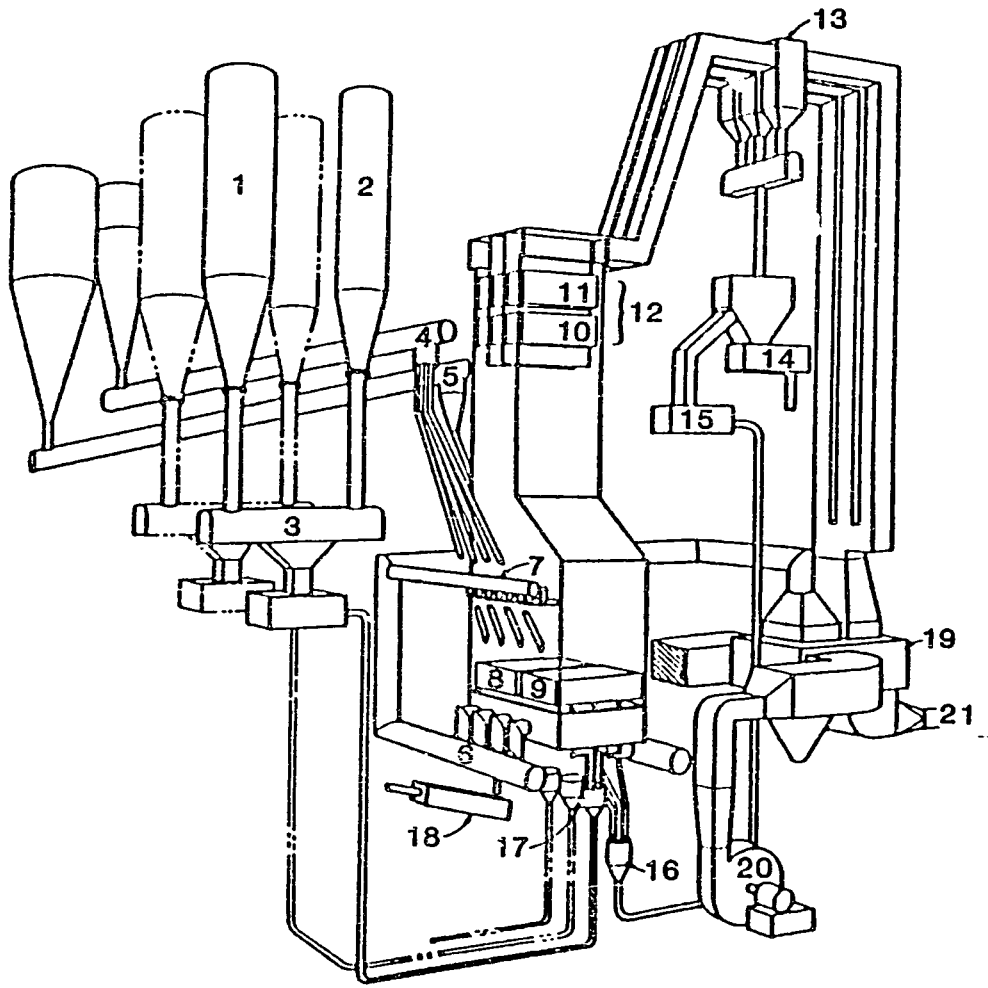

1. COAL BUNKER
2. LIMESTONE BUNKER
3. FUEL UNDERBED LIMESTONE FEED
4. OVERBED LIMESTONE FEED
5. OVERBED COAL FEED
6. AIR DUCT
7. OVERFIRE AIR SYSTEM
8. IN-BED SUPERHEATER SURFACE
9. IN-BED EVAPORATOR SURFACE
10. SUPERHEATER
11. ECONOMIZER
12. CONVECTION PASS REGION
13. CYCLONE DUST COLLECTOR
14. RECYCLE DRAIN COOLER
15. RECYCLE FEED PUMP
16. RECYCLE STREAM SPLITTER
17. FUEL STREAM SPLITTER
18. BED DRAIN COOLER
19. AIR HEATER
20. FORCED DRAFT FAN
21. FLUE GASES TO BAGHOUSE

Figure 1. TENNESSEE VALLEY AUTHORITY 20-MW AFBC PILOT PLANT

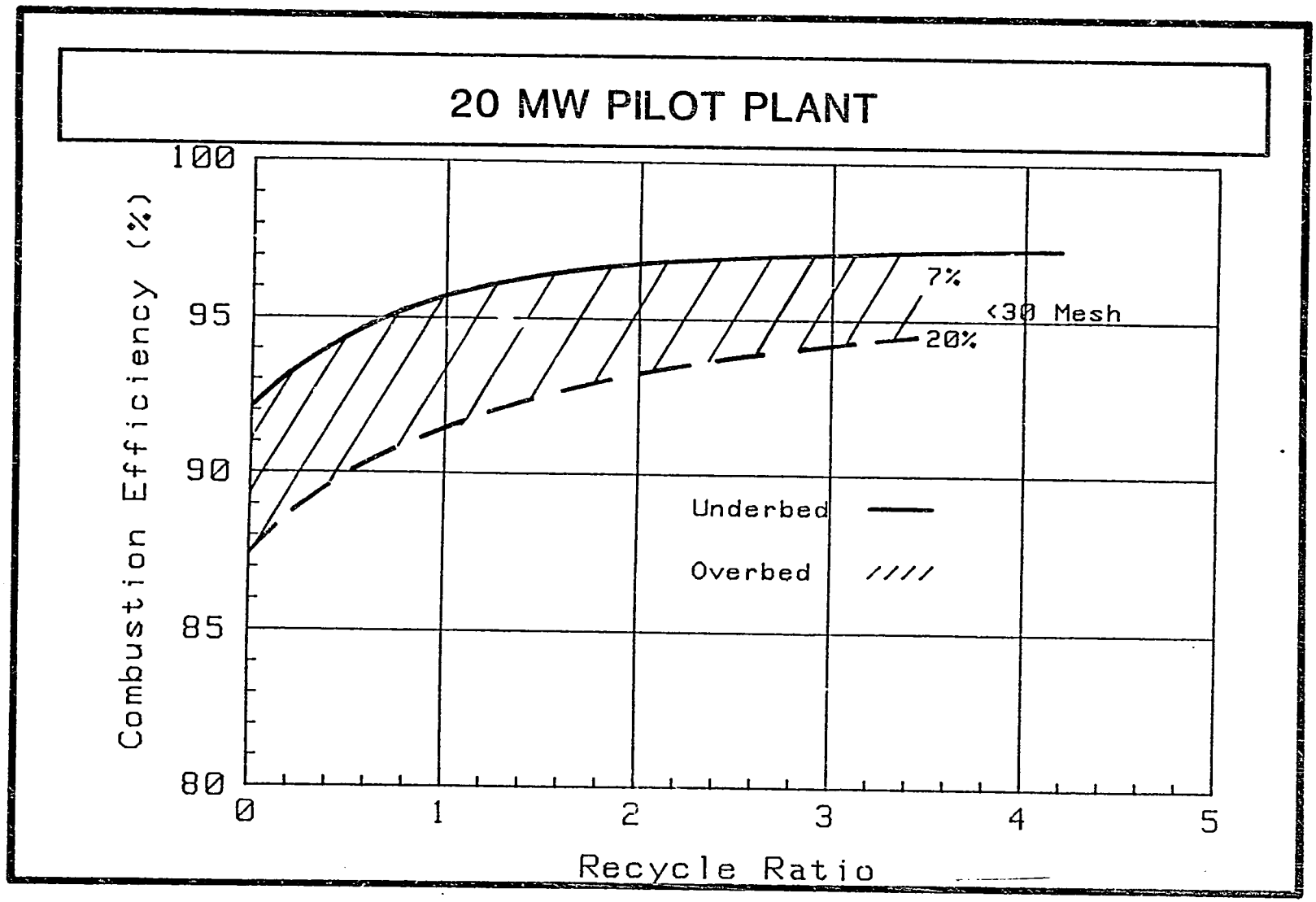

Figure 2. PILOT PLANT COMBUSTION EFFICIENCY

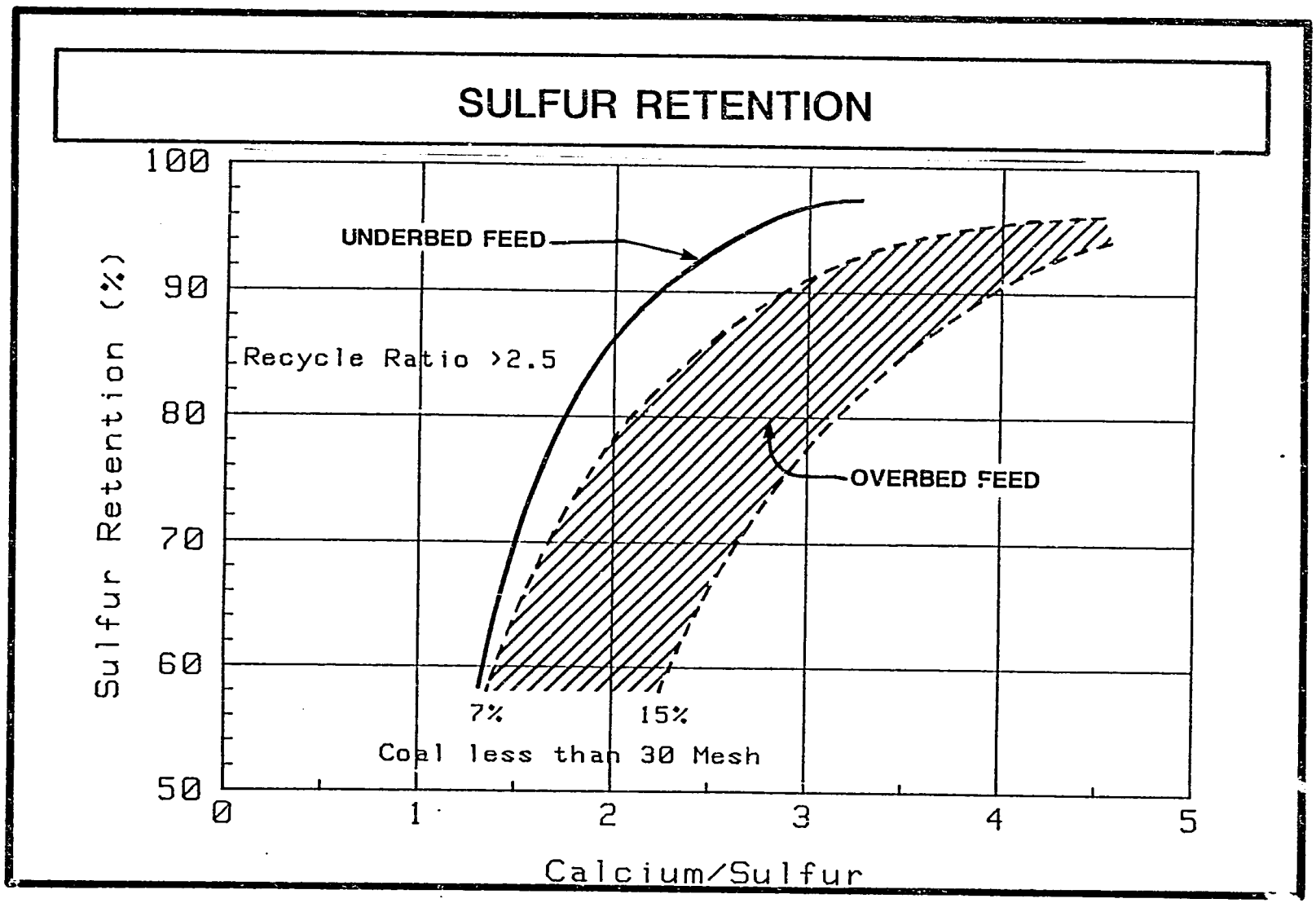

Figure 3. PILOT PLANT SULFUR RETENTION

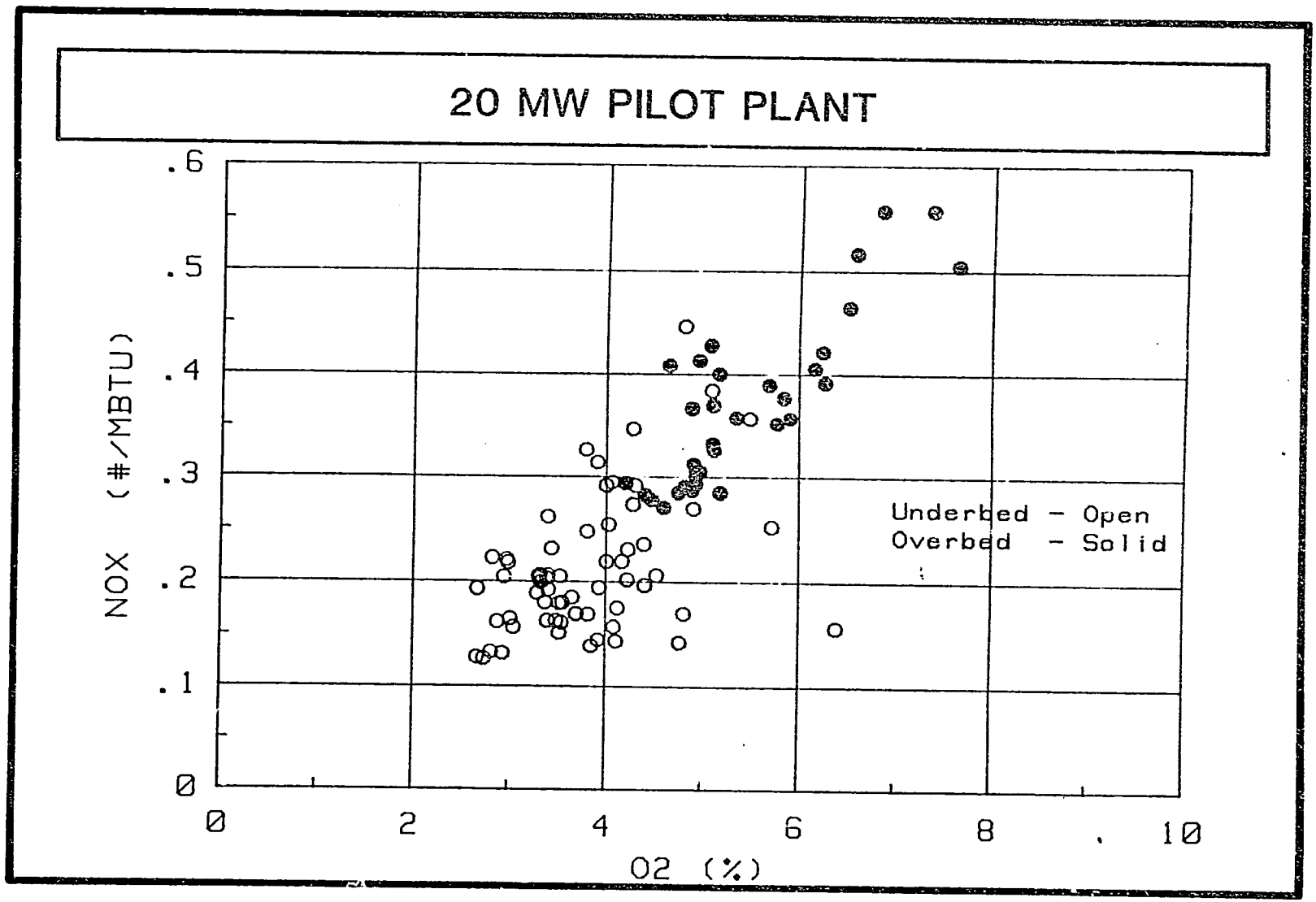

Figure 4. PILOT PLANT NO_x EMISSIONS

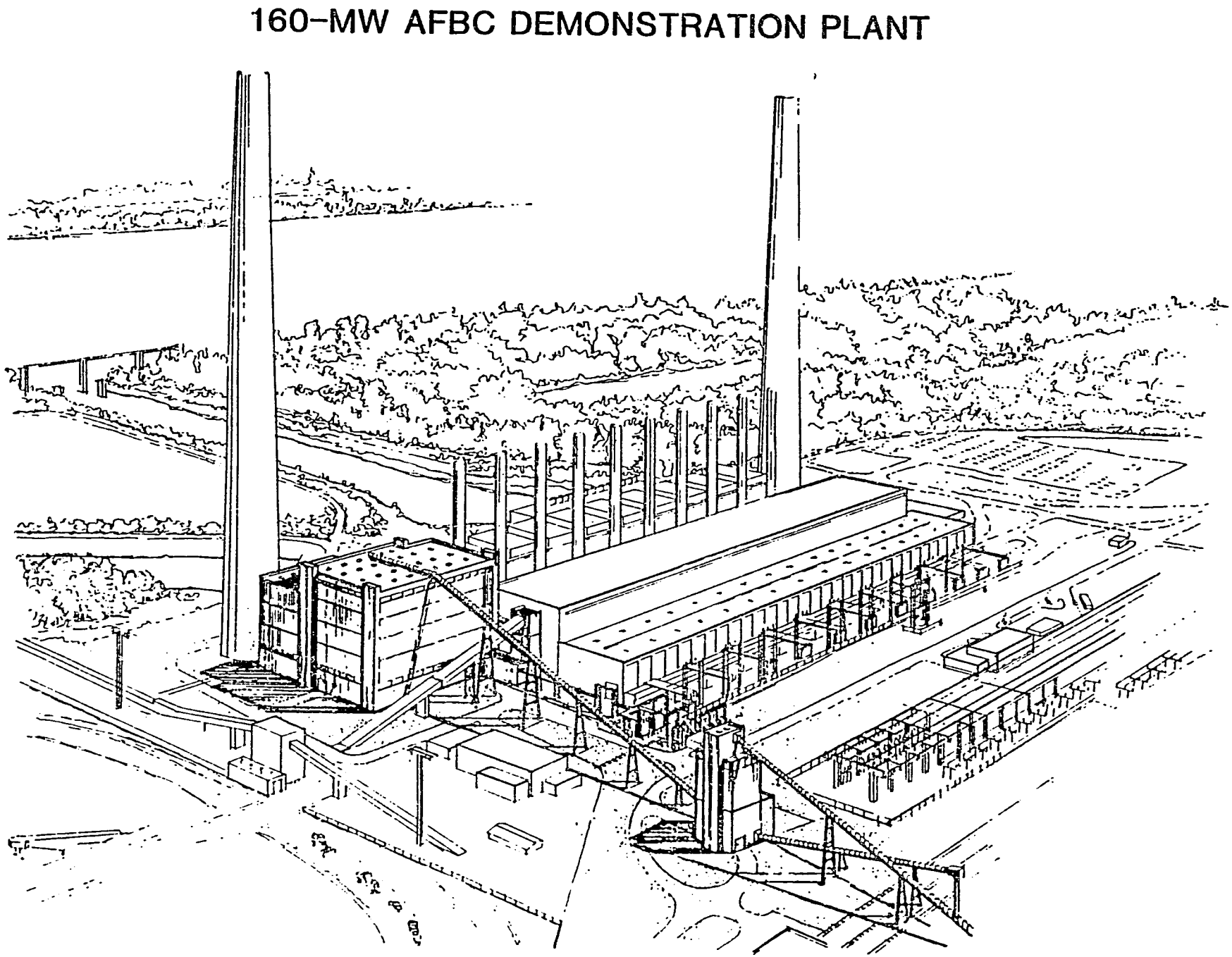

Figure 5. AFBC ADD-ON DEMONSTRATION PLANT AT TVA

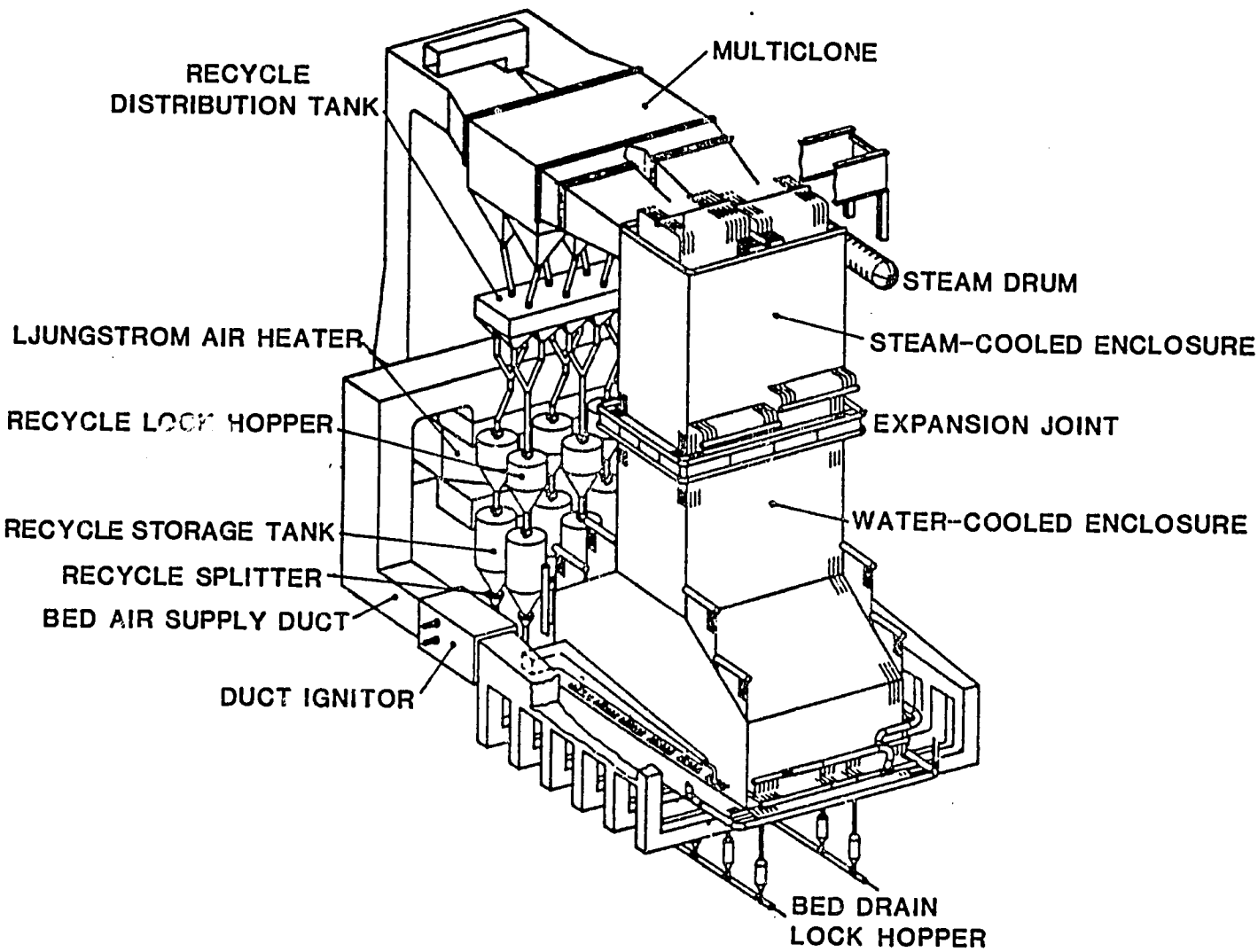

160 MW ATMOSPHERIC FLUIDIZED BED DEMONSTRATION PLANT

Figure 6

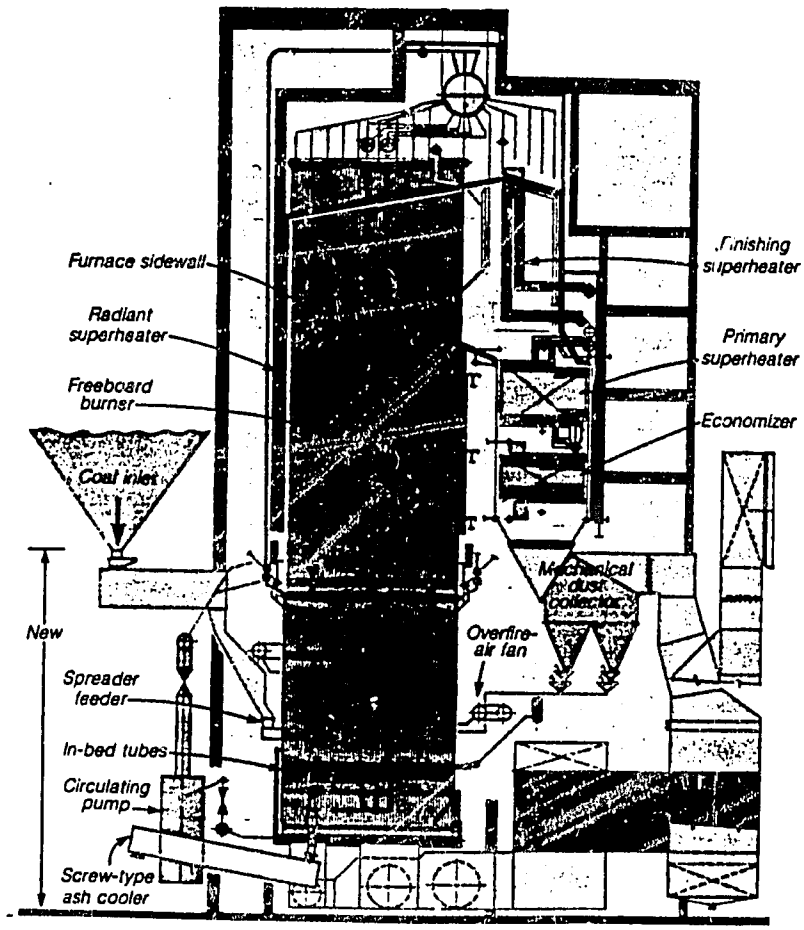

Figure 7. AFBC RETROFIT AT NSP

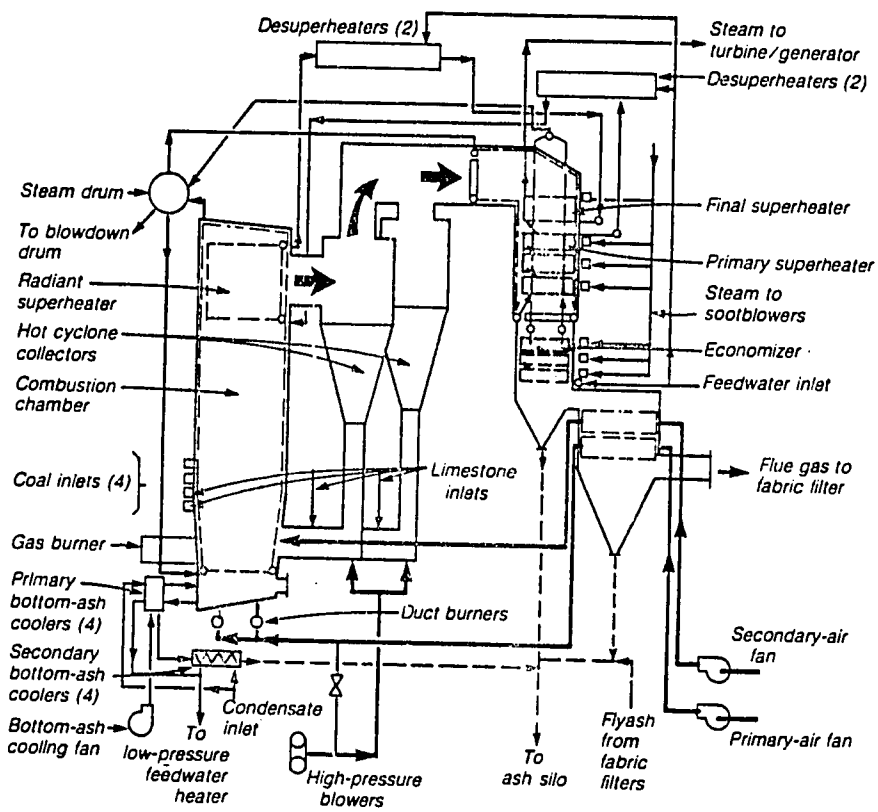

Figure 8. CFBC ADD-ON BOILER AT COLORADO-UTE

CURRENT COAL CLEANING PRACTICES IN THE UNITED STATES

A. W. Deurbrouck

Director, Coal Preparation Division
Pittsburgh Energy Technology Center
U.S. Department of Energy
Pittsburgh, Pennsylvania, U.S.A.

CURRENT COAL CLEANING PRACTICES IN THE UNITED STATES

by

A.W. Deurbrouck
Director, Coal Preparation Division
Pittsburgh Energy Technology Center
U.S. Department of Energy
Pittsburgh, Pennsylvania U.S.A.

Coal washing is currently being practiced in the United States at a scale never before attained. This dramatic move to the utilization of washed coals is primarily in response to pressure from environmental agencies to burn lower sulfur content coals. Today, as much as 68% of the coal burned by the eastern electric utility industry is washed, compared to 45% only 5 years before. The benefits of coal washing have long been recognized. Using data from extensive washability studies, various State and Federal publications have characterized the sulfur and ash reduction potential of our principal coal seams. In addition, the available coal preparation equipment is known to be reliable and efficient, and able to provide final clean coal products with predicted sulfur and ash levels.

There are other reasons for the move to washed coals by the electric utility industry, aside from environmental pressures. Studies of Eastern U.S. coals have consistently shown that sulfur reduction potentials of 20 to 35% are attainable with high Btu recoveries and at low cost using conventional equipment. The electric utility industry realizes that increasing the firing of coals of reduced mineral matter content and of constant quality is cost effective on the basis of lower bus bar costs of electricity produced per dollar spent for fuel. And finally, as the demand for steam coal increases, production from thinner, lower quality seams will also increase. Such coals will require washing to meet desired sulfur and Btu content levels.

To obtain the increased tonnage of washed coals necessary to meet the market demands, coal preparation plants that normally operated only one shift per day are now working two, and even three shifts, in some cases. In other plants where only the coarser sizes of the coal were washed, circuits were added so that the finer sizes could also be washed. This is particularly important, as liberated pyrite tends to concentrate in the finer size fractions. And finally, some new plants were built that reflect the current thinking of the industry as to the type of equipment to utilize.

Table 1 is a summation of the installed equipment in our coal preparation plants in 1978 and 1983. While there are no dramatic changes, there is an apparent move to more dense-medium cleaning at the expense of jigs, and more fine-coal washing equipment being used. These trends are an indication of the desire to wash coals more efficiently and to take advantage of the impurity liberation possible when reducing plant feed top size.

Perhaps the best way to illustrate advanced-conventional physical coal preparation practices would be to describe a new coal preparation plant that embodies equipment and circuits that are recognized as best available state-of-the-art technology. While there are a number of plants that fall in this category, I have decided to describe the Galatia plant of the Kerr-McGee Coal Corporation.

This facility is rather unique in that the Kerr-McGee Corporation decided to go out with separate bids for the design of the plant and its construction. This was done to assure that the plant was designed to meet the desire of Kerr-McGee to have operating flexibility at maximum recovery and at the same time low maintenance. The Dravo Corporation won the design contract. The Roberts & Schaefer Company was later awarded the building contract. However, Dravo personnel were kept on the job throughout the construction and start-up phases.

This joint effort between the coal company and the two contractors has resulted in a 1,000 ton-per-hour-capacity coal preparation plant being built and brought on-line with only a minimum of start-up problems. When the mine is at full production, the preparation plant will be expected to process about 2 million tons per year of Illinois #5 and #6 seam coals.

To assure low maintenance and on-line reliability, the materials of construction were carefully chosen to resist erosion, because of the pyrite and hard shales associated with this coal, and corrosion, because of the chlorine content of this coal.

In general, this is a standard preparation plant, cleaning coarse, intermediate, and fine-size coal in conventional washing devices, heavy-media vessels, heavy-media cyclones, and froth flotation cells. What is unique about this plant is the attention paid to the ancillary operations. Screen areas are generous as is the supply of plant circulating water. Thus, relatively sharp separations are attained on the screens with little misplaced material. This is crucial in obtaining efficient separations in the coal washing devices and in assuring low magnetite losses on the heavy-media drain and rinse screens.

While the plant routinely removes about 25% refuse from the incoming raw coal, it is engineered to remove up to 50% refuse. Thus, large changes in the raw coal washability do not derate the preparation plant washing capacity.

To minimize the handling problems associated with refuse disposal the 1/2-inch by 28-mesh heavy-media refuse is centrifically dewatered here in 48-inch vibratory CMI centrifuges.

In the fine coal circuit the clean coal products from the two flotation circuits are dewatered in Bird screen-bowl centrifuges providing a final product of as little as 13% water.

At full operation, the plant would devote 17 shifts per week to production and only 4 to scheduled maintenance. To minimize downtime, the plant has extensive by-pass capability except for the coarse coal circuit and the static thickener. Every piece of equipment can be taken off-line for repair without the necessity of shutting down the entire plant. To assure ease of maintenance, a low profile design was selected that made every major piece of equipment accessible by a 15-ton-capacity overhead traveling crane.

The Galatia plant uses electronic instrumentation and control systems to achieve optimum efficiency and yield. Plant software is designed to control as well as to monitor equipment, sump levels, rates of flow, and chemical additives. Also, specific gravity can be controlled to within 0.002 by the electronic controls.

Clean coal is stored in 12,000 ton capacity silos. Two are already in use and two additional units are being built at the present time. Plant feed coal is stored in two 12,000 ton capacity silos.

This preparation plant cost 52· million dollars to build initially. After the new clean coal silos are completed and minor modifications are made in the plant, the total cost for the facility will be approximately 60 million dollars.

There is no one generic coal preparation plant design that is capable of dealing with the wide range of coal washabilities found in the United States. Consequently, there are many modifications that could be made in the Galatia plant, especially in the intermediate and fine coal circuits. Some of these modifications would be totally dependent upon the washability of the coals to be processed while others would be influenced by the personal preferences of the plant operator. Figure 1 shows the intermediate size coal washing circuit at Galatia. Here a dense-medium cyclone washes the 1/2-inch by 28-mesh coal in a conventional circuit. The minus-28-mesh coal is cleaned by froth flotation. However, with a coal of high pyritic sulfur content, or an oxidized coal, the size range of feed coal to the heavy-medium cyclones might be extended down to 100 or 150 mesh. This circuit is used in a few existing U.S. facilities.

The Galatia plant has a unique split froth flotation circuit for cleaning the fines (Figure 2). Here a classifying cyclone separates the low density coal at about 100 mesh while the coal associated heavy impurities are separated at relatively finer sizes until the heaviest impurity, pyrite, is separated somewhere between 200 and 325 mesh. Thus, the classifying cyclone overflow contains 100 mesh by 0 coal, most of the clay slimes, and only the finest size pyrite particles. This fine coal is washed in trough type flotation cells and the final clean coal product is relatively pyrite free.

The classifying cyclone underflow product containing a large percentage of the minus 28 mesh pyrite is deslimed on Derrick high frequency screens at 100 mesh. The underflow from the Derrick screens goes directly to the refuse thickener. The screen overflow is washed in cell-to-cell flotation units. Unfortunately, too much of the 28- by 100-mesh pyrite reports to the clean coal product in the coarse size flotation cells. Therefore, the Galatia people are considering modifying the circuit slightly by removing the high frequency screens and replacing them with spirals (Figure 3). The spirals should remove most of the minus 28 mesh pyrite prior to flotation, thus providing a clean coal froth of lower sulfur content.

Another useful modification for a flotation circuit where the clean coal ash content is too high is shown in Figure 4. Here the primary clean coal products are both rewashed. Because the ash content of the Galatia flotation products are acceptable they are not considering this modification. However, rougher-cleaner flotation circuits are a viable option.

Finally, the reverse pyrite flotation process could be employed to reduce the pyrite in the coarse size flotation circuit. This is an option that might be considered at the Galatia plant (Figure 5).

As mining costs increase and the quality of the coal seams generally deteriorate, the importance of coal beneficiation assumes added significance. Through careful design considerations, new plants can provide products of required quality efficiently in a cost effective manner.

TABLE 1

MECHANICAL CLEANING OF COAL BY TYPE OF EQUIPMENT, CLEAN COAL PRODUCED

Type of Equipment	Coal Produced, %	
	1978	1983
Wet Methods:		
Hydraulic Processes:		
Jigs	46.6	39.3
Concentrating Tables	10.5	10.5
Water-Only Cyclones	2.7	5.7
Others	.6	.8
Dense Medium Processes:		
Magnetite	29.3	34.9
Sand	3.5	2.7
Calcium Chloride	.4	.0
Froth Flotation	4.5	4.8
Pneumatic Methods:	1.9	1.3
Grand Total	100.0	100.0

NO./9759

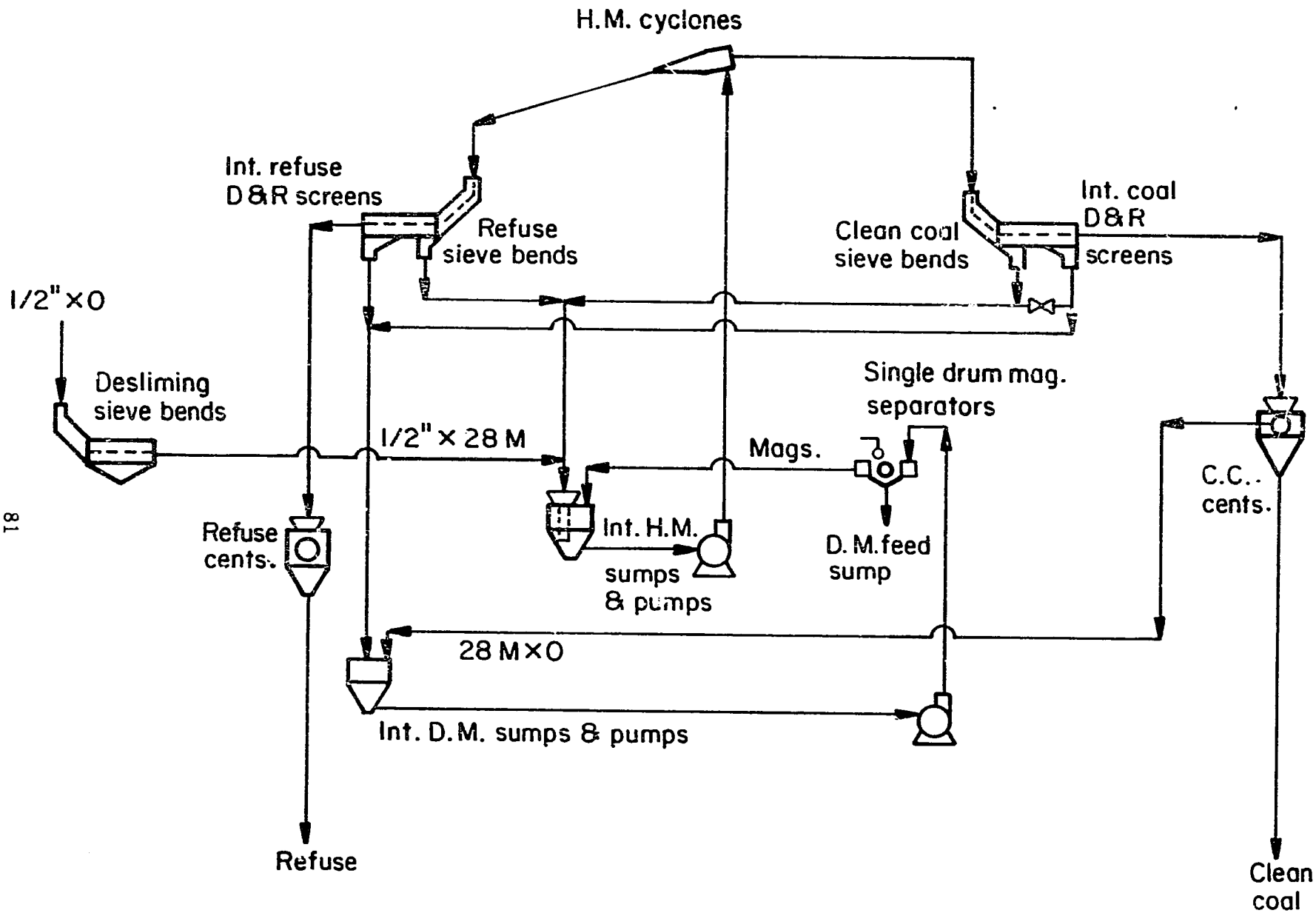

INTERMEDIATE-SIZE COAL CLEANING CIRCUIT--GALATIA PLANT

FIGURE 1

NO./9705

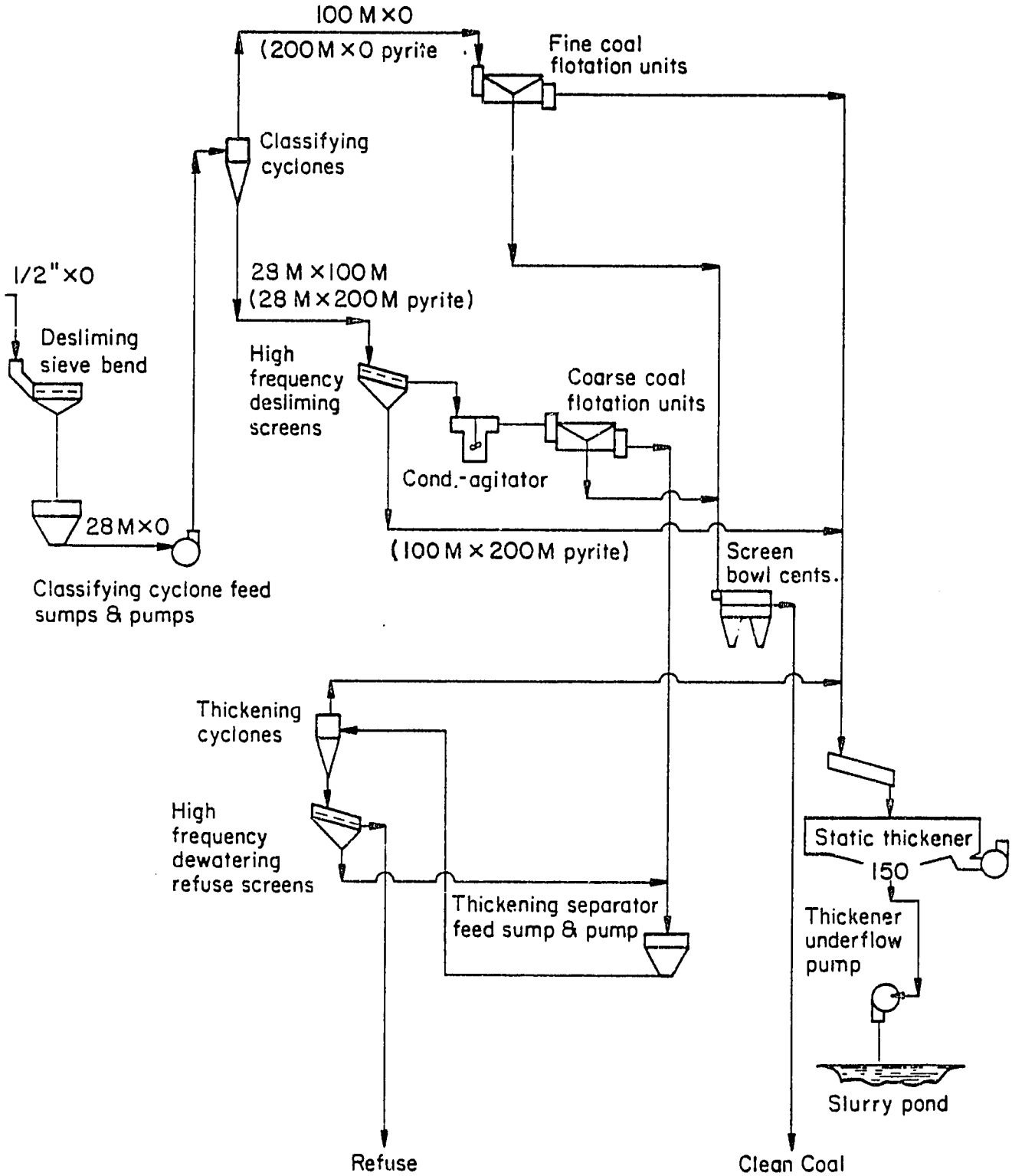

A FINE-SIZE COAL CLEANING CIRCUIT--GALATIA PLANT

NO/9706

FIGURE 2

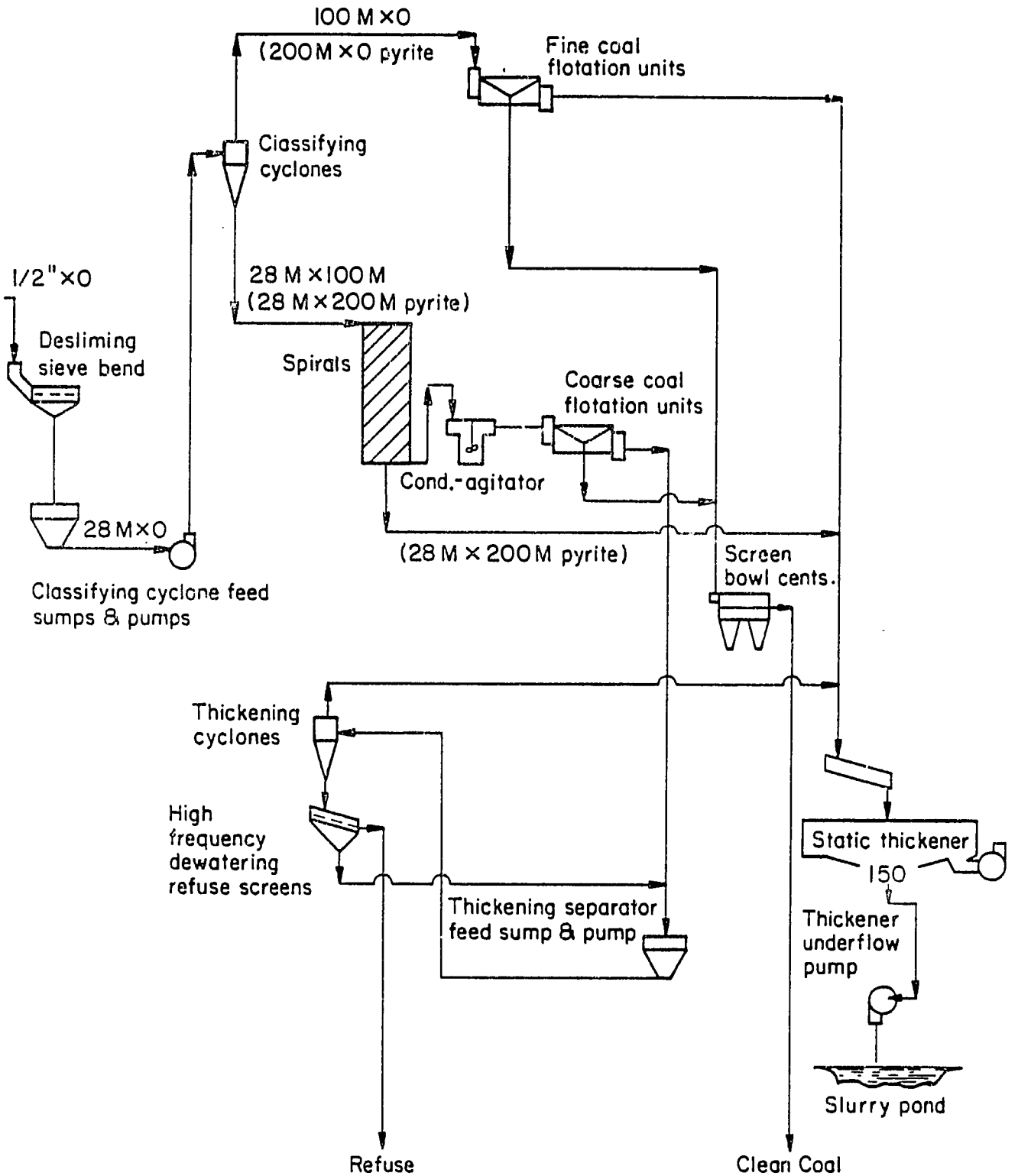

A FINE-SIZE COAL CLEANING CIRCUIT--GALATIA PLANT, MODIFICATION I

NO./9706-A

FIGURE 3

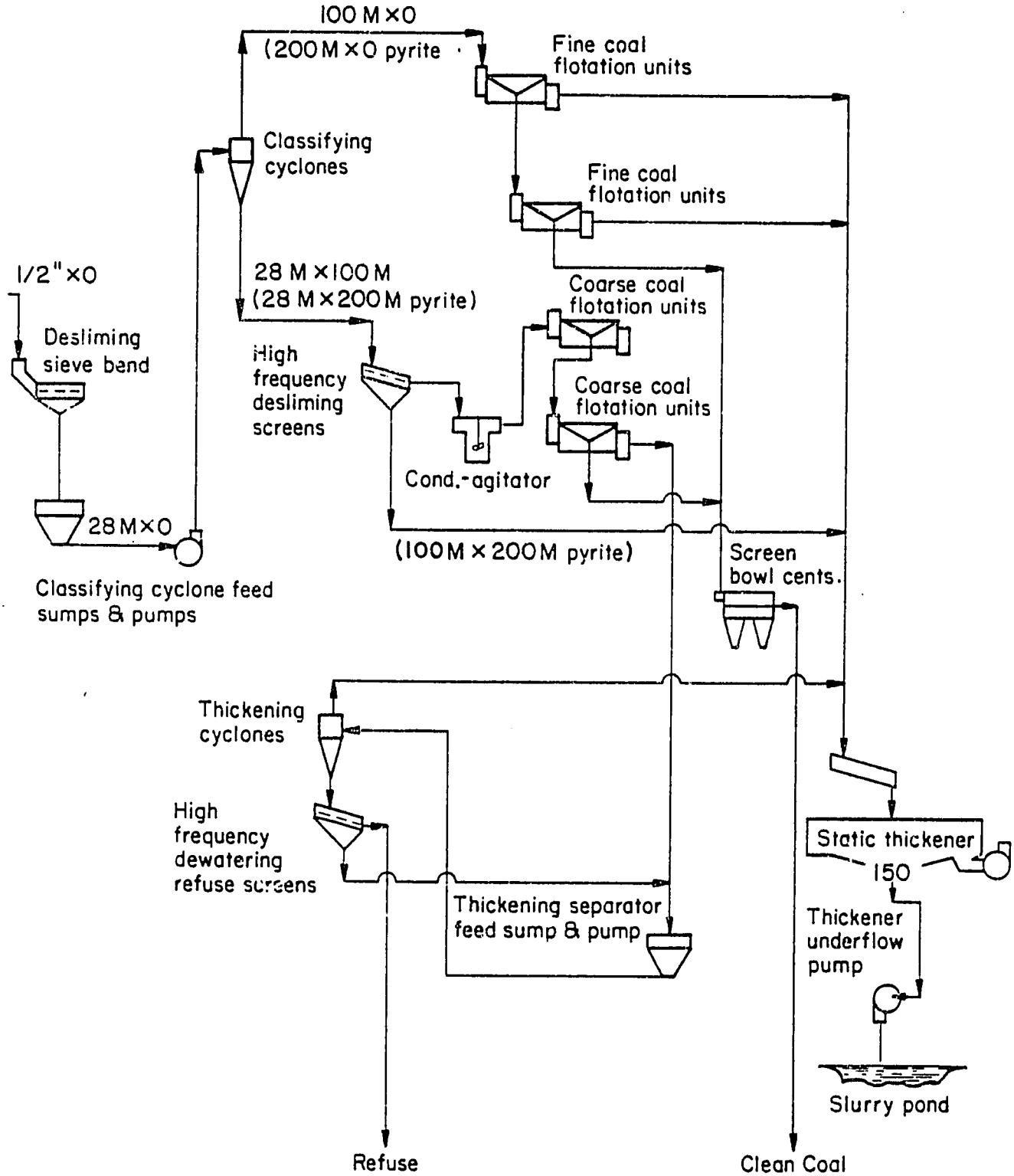

A FINE-SIZE COAL CLEANING CIRCUIT--GALATIA PLANT, MODIFICATION 2

NOJ9706-B

FIGURE 4

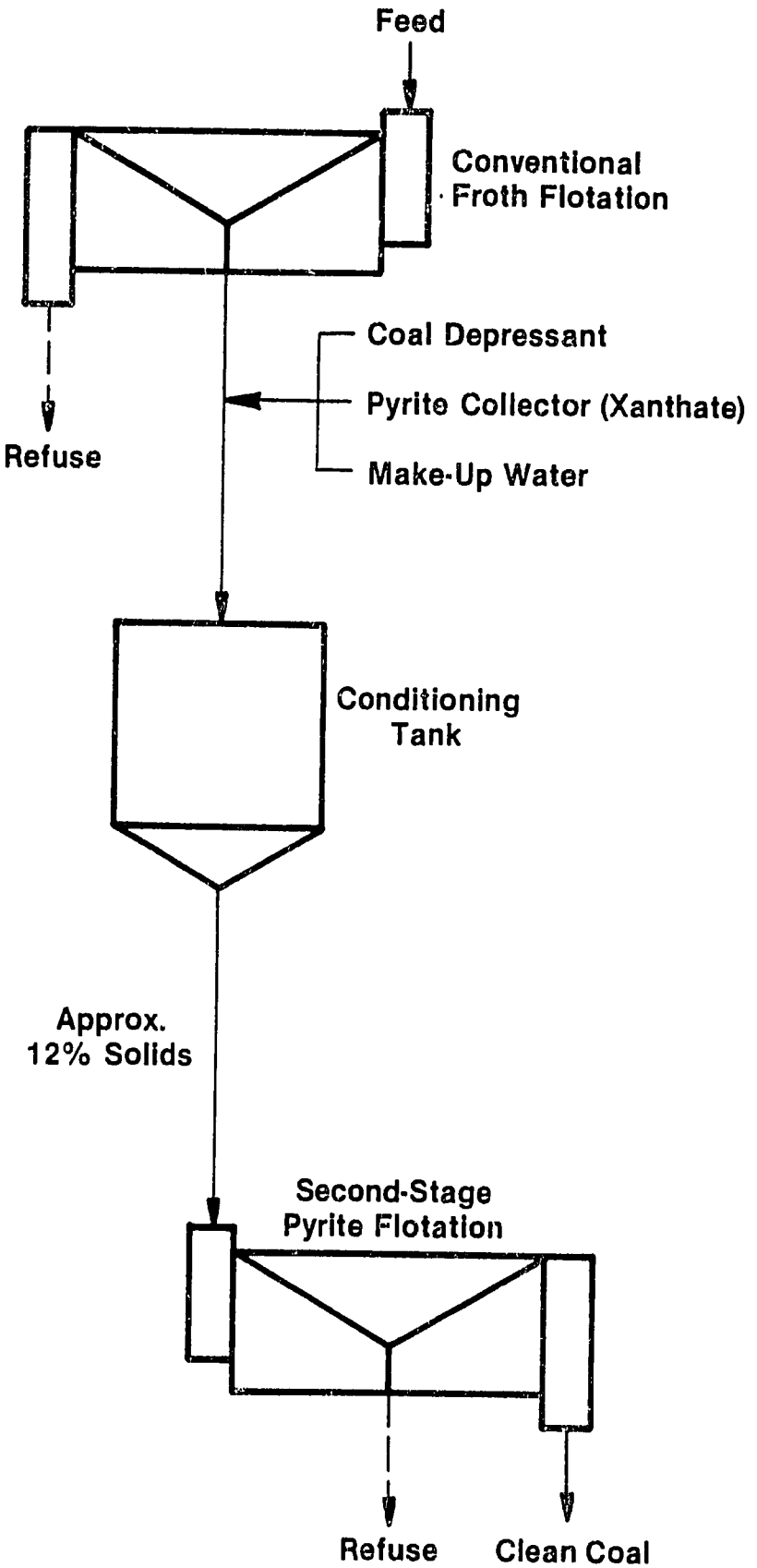

Coal-Pyrite Flotation Circuit

FIGURE 5

BSI/6365

FUEL GAS UPGRADING AND SEPARATION

Madhav R. Ghate

Morgantown Energy Technology Center
U.S. Department of Energy
Morgantown, West Virginia, U.S.A.

FUEL GAS UPGRADING AND SEPARATION

by

Madhav R. Ghate
U.S. Department of Energy
Morgantown Energy Technology Center
P.O. Box 880
Morgantown, West Virginia 26505

INTRODUCTION

It is very important to consider the needs of the fuel gas utilization system prior to selecting the fuel gas upgrading or separation system. In the case of Indian coals, which are high in ash and low in sulfur, the technologies developed for the U.S. high-sulfur coals may require careful optimization. In the current paper, attempts are made to summarize various gas separation processes and particulate removal devices that are applicable to the coal-derived fuel gas.

The major types of pollutants in both gasification and combustion are sulfur compounds, nitrogen compounds, carbon monoxide, and particulates. To meet air pollution standards, the particulates, nitrogen oxides, and sulfur oxides must be removed. If the gas stream is to be used for further processing, it must be purified to very low concentrations of sulfur, alkali, particulates, and carbon dioxide.

Nitrous oxide is best controlled during the combustion process by changing the ratio of air to coal and reducing the residence time. High-temperature cleanup processes pose the problem of fuel-bound nitrogen being released. Low-temperature cleanup systems, such as water washes and wet scrubbers, do not have this NO_x problem.

To remove large particulates, cyclones are effective. Since cyclonic separation efficiency decreases with temperature, the cyclones should be operated

at lower temperatures. At high temperatures, filters are the best available method of removal; however, these processes are expensive and must operate under limited conditions. If small particulates are present, they can be better removed by wet scrubbers or electrostatic precipitators.

Acid gases (CO_2, H_2S, and COS) can be removed by four major methods: adsorption, physical absorption, chemical absorption, and chemical conversion. Adsorption is used to eliminate organic sulfur, CO_2, and trace amounts of H_2S. Physical absorption is most effective for high-pressure gas streams containing large amounts of sour components since the amount of acid gas absorbed is directly proportional to the acid gas partial pressure. Chemical absorption is more useful if a high degree of removal is necessary or if the acid gas partial pressure is low. Chemical conversion is used to catalytically convert impurities such as CO, CO_2, and organic sulfur compounds to other useful or easily removed substances.

Cleanup schemes can be classified as high or low temperatures. High-temperature processes are less expensive since heat exchange equipment is not needed to cool the product gas. Low-temperature processes, although less economical, are more documented and are commercially available.

CONTAMINANTS FROM COAL GASIFICATION AND COMBUSTION

1. Gasification

The three basic feed streams needed for the gasification of coal are coal, steam, and a source of oxygen. Oxygen can be supplied to the gasifier by either a stream of pure oxygen or a stream of air. The choice between oxygen and air is usually determined by the end use of the gas. Oxygen-blown systems produce an intermediate-Btu gas with a heating value roughly in the range of 280 to 400 Btu/cu ft. On the other hand, air-blown systems produce low-Btu fuel gas with a heating value generally in the range of 120 to 200 Btu/cu ft. The major difference in the product gas produced from using air or oxygen is the amount of nitrogen present. A comparison of air- versus oxygen-blown gasification is listed in Table 1 for a FW/BCR-type gasifier with an Illinois No. 6 feed coal.

TABLE 1 (17)

Comparison of Air- Versus Oxygen-Blown Gasification
FW/BCR-Type Gasifier
Coal -- Illinois No. 6

	Air Blown Mol %	Oxygen Blown Mol %
CH_4	3.37	6.04
H_2	13.68	29.50
CO	28.75	35.33
CO_2	3.03	12.51
H_2S	0.67	1.03
COS	0.07	0.10
N_2	48.02	0.45
NH_3	0.43	0.64
H_2O	1.98	14.40
HHV-Btu/SCR	171.20	270.80
Oxidant/Coal Ratio	2.78	0.594
Steam/Coal Ratio	0.144	0.597
Transport Gas/Coal Ratio	0.088	0.088
Cold Gas Efficiency	83.0%	85.7%

The major contaminants produced in the gasification of coal are listed below:

a. Sulfur is converted mainly to hydrogen sulfide (H_2S), but the gas will also contain carbonyl oxysulfide (COS), carbon disulfide (CS_2), sulfur dioxide (SO_2), sulfur trioxide (SO_3), mercaptans, and thiophene.

b. The nitrogen content in coal produces nitrogen oxides (NO_x), ammonia (NH_3), hydrogen cyanide (HCN), and sulfocyanide compounds in the gas stream.

c. The volatile matter in coal can appear as tars, oil, naptha, phenols, cresols, etc.

d. Halogens are converted to their acids.

e. Alkalis present in the ash are volatilized.

f. Reactive or readily vaporized elements such as beryllium, arsenic, selenium, cadmium, mercury, and lead are potential hazards.

g. Hydrocarbons and carbon monoxide may also have to be controlled.

2. Combustion

Burning of coal is a major source of emissions of waste materials both from the standpoint of quantity and variety of pollutants. For instance, combustion of coal for generating electricity contributes nearly 60 percent of all sulfur oxide emissions and about 25 percent of all nitrogen oxides emitted from anthropogenic sources in the United States.

Combustion of coal produces these major contaminants:

a. Particulates matter evolves during combustion and is made up of smoke (unburned solid combustible material) and ash (mineral matter from the coal).

b. Sulfur in the coal is oxidized to form sulfur dioxide (SO_2) and a small percentage of sulfur trioxide (SO_3) depending on the amount of excess air used.

c. Nitrogen oxides (NO_x) are formed both from nitrogen compounds in the coal and from the nitrogen in the combustion air.

d. Alkalis present in the coal ash are volatilized.

e. Trace elements and trace organic compounds present in the material matter of coal are emitted upon combustion.

f. Hydrocarbons and carbon monoxide may also have to be controlled.

Many factors influence the quantities and rates of emissions from coal systems. These include coal feed, efficiency of the process, emission control technology used, and the type of process employed.

Coal Feed -- The most important variables are the percentage of sulfur, the ratio of organic to inorganic sulfur, the percentage of nitrogen, the percentage of volatile matter, moisture, ash content, heating value of coal, and the range of sizes of the coal particles.

Control Technology -- Reduction of pollutants can be achieved by one or a combination of the following:

- Change the process so smaller amounts or less hazardous pollutants are produced.
- Contain the undesirable elements both within the plant and within wastes.
- Decrease amount of wastes by using them as by-products.
- Remove the pollutants by means of emission control equipment.

Process Type -- The process variables that affect the pollutants emitted are the amount of excess air used, the type of catalyst utilized, the process pressure and temperature, the reaction vessel configuration, the feed entry geometry, the cooling rate of decomposition products, the gas velocity, and the type of control equipment used.

PRODUCT GAS SPECIFICATIONS

The degrees of gas purity may be fixed by environmental regulations or by downstream processing requirements. For example, stack gases from the combustion of coal to generate electricity must be sufficiently free of nitrogen oxides, sulfur oxides, and particulate matter prior to discharge to the atmosphere. This is because of their detrimental effect on the human respiratory system, their corrosive nature when in solution with water (acid rain), and their tendency to form eye-irritating photochemical smog. In the case of gasification products, downstream processing requires that corrosive and maladorous contaminants be removed. These impurities can cause damage to the processing equipment, can poison catalysts, and can produce unwanted by-products.

Because of the great variety of gas stream cleanup processes available, it is necessary to know what contaminants need to be removed and to what degree they should be removed to effectively choose the best process. As a rule, the end use of the gas defines how pure the stream should be and, consequently, which process should be employed.

1. Turbines

Steam turbines, as their name suggests, are operated by steam which is generated from the heat of combusted coal. The main restrictions for the stack or flue gases are environmental.

Gas turbines are driven by the hot pressurized gases produced by the combustion and gasification of coal. Usually, the turbine exhaust gas is discharged directly to the atmosphere so it, too, must meet EPA emission standards. However, strict limits on contaminant concentration in turbine fuel due to corrosive effects of the dirty gas on the material of construction, generally, exceed those set environmentally. Particulate carry-over causes erosion of turbine blades The larger particles (less than 5 to 10 microns) erode the blades at a high rate making the turbine inoperable after a relatively short time. Smaller particles (2 microns or less) adhere to the surface upon impact and cause fouling of the stationary turbine cascade. In addition, alkali, composed mainly of sodium and potassium species, are corrosive and also shorten gas turbine lifetime.

2. Synthesis Gas

Synthesis gas must be significantly pure to avoid catalyst poison, to prevent the formation of undesirable by-products, and to assure the maximum conversion to the desired products.

For instance, to convert syngas (CO and H_2) to pure hydrogen, the syngas must be desulfurized. Also, the CO_2 originally present in the gas and any CO_2 formed in the shift reaction of carbon monoxide and steam to hydrogen must be removed.

In the synthesis of ammonia, a stream of high-purity hydrogen and nitrogen is needed. Therefore, the gas must be 99 percent free of sulfur, carbon dioxide, and carbon monoxide.

The catalyst (Cu-Zn-Al) used in the production of methanol from syngas allows the use of milder reaction conditions. However, the catalyst requires very high degrees of purity, especially with respect to chlorine and sulfur compounds.

The production of methane from synthesis gas is achieved in the presence of a nickel catalyst. Deterioration of the catalyst can be at a minimum if carbon monoxide, hydrogen sulfide, and other organic sulfur compounds are removed and if carbon deposits resulting from the Boudouard reaction are suppressed.

Synthesis gas used in the Fischer-Tropsch process produces aliphatic hydrocarbons within a wide range of carbon numbers from gaseous products to high-boiling paraffins. The synthesis gas is made up of hydrogen and carbon monoxide and needs to be sufficiently free of sulfur compounds and carbon dioxide. Data from the SASOL I plant to convert coal to hydrocarbons and gas indicate that a clean stream containing 86 volume percent of a H_2-CO mixture and 12 volume percent CH_4 is sufficient.

3. Fuel Cells

In a fuel cell, electric current is generated by converting the chemical energy of a fuel into electrical energy. The fuel is oxidized, and the resulting chemical reaction provides the energy that is converted into electricity. High-temperature fuel cells, with a molten carbonate mixture as the electrolyte, offer the prospect for use with coal. In this case, gaseous mixtures of hydrogen and carbon monoxide can be used as the fuel.

The contaminants of concern are sulfur compounds, halogen compounds, nitrogen compounds, metal and trace elements, hydrocarbons, and particulates. Sulfur compounds cause significant performance as well as endurance penalty to the molten-carbonate fuel cell (MCFC). This occurs when

the sulfur-containing contaminants corrode the electrode and the current collector, and when carbonate loss results from compositional changes in the electrolyte. Halogen compounds such as HCl and HF degrade the electrolyte and promote stress corrosion cracking. Molecular nitrogen, NH_3, and NO_x act as diluents at the anode and cathode. The effects of metal and trace elements are to change the physical properties of the electrolyte and to deposit on the anode and cathode. Also, hydrocarbons deactivate the electrodes and lead to carbon formation. Lastly, particles can lead to partial plugging of the anode since the small particles can diffuse into the pores of the fuel cell porous nickel anode.

Therefore, the contaminant level in the fuel supplied to a MCFC must be within strict tolerance limits.

FUEL GAS SEPARATION PROCESSES

Fuel gas separation processes can be classified into two major categories: (1) conventional and (2) unconventional. The conventional processes use basic gas-liquid contacting mechanisms such as:

- Physical absorption.
- Chemical absorption.
- Adsorption.

Because of the high energy cost involved in the operation of these conventional processes, the Department of Energy has started a program to explore certain unconventional techniques to separate fuel gas. These include:

- Membranes.
- Biological.
- Chemical complexity.

1. Conventional

a. Adsorption

In this method, impurities are removed from the gas phase by becoming concentrated on the surface of a solid. The solid material is usually a granular particle that has been commercially prepared to have a large surface area per unit weight. Usually, a fixed bed of these granular particles is employed. In the bed, a concentration gradient exists between the gas inlet and the gas outlet with respect to the liquid and the gas phases. As time proceeds, the concentration gradient shifts toward the gas outlet as the adsorbate is picked up and held by the adsorbent.

b. Absorption

The mechanism of absorption is the transfer of a substance from the gas phase, through a phase boundary, and into the liquid phase. Absorption may occur by two methods: the substance is physically dissolved in the liquid, or the substance reacts chemically with the liquid absorbent. Figure 2 shows the operating lines for physical versus chemical absorption processes for acid gas removal.

- Physical Absorption

  Physical methods depend on the fact that the solubility of a gas in a liquid is greater at higher pressures than at lower pressures. Therefore, the contaminant is extracted from the gas under pressure by an organic solvent. When the pressure is reduced, the dissolved contaminant is released in gaseous form from the solvent. The amount of acid gas absorbed is directly proportional to the acid gas partial pressure in the sour gas stream. These processes are most effective for high-pressure gas streams containing appreciable amounts of sour components.

- Chemical Absorption

In chemical methods, a chemical reaction occurs between the substance and the absorbing medium. Most chemical absorption methods depend on the use of weakly alkaline material that combines and removes the acidic contaminants. The impurities are removed from the liquid absorber by heating in a reboiler. Other processes also utilize weakly alkaline solution, but the absorbed substances are removed by oxidation. Chemical absorption is most advantageous when the partial pressure of acid gas in the feed is low, or when a high degree of removal is required.

2. Unconventional Methods

a. Membranes

Gas separation by membranes is based on the principle that different components of a gas mixture permeate across a membrane at different rates. The driving force is the partial pressure of the gas. Separation, therefore, can occur over a range of conditions. The only limitations are the physical properties of the membrane. In gas separation, a combination of high flux and high separation factor make a membrane economically feasible. Membranes can be made from a number of materials including rubber and polymer. Each membrane has its own characteristics and is more suited than others for certain applications.

The advantages that membrane separation has over other methods of gas separation are the reduced capital costs, reduced utility requirements, lower fuel consumption, and lower space requirements for the unit. Additionally, modular units can be employed to minimize downtime.

b. Supported Complexes

Metal complexes can be used to separate gases in order to recover valuable components and remove undesirable contaminants from a gas

stream. Pacific Northwest Laboratory (PNL) is studying organometallic complexes and is researching the incorporation of these complexes with polymeric supports.

The supporting matrices were selected from a group that included organic polymers, silica gel, and glass beads. Polystyrene was the preferred choice due to the previous experience with it at PNL and of other gas separation specialists.

The organometallic complexes that were selected for further study were ($Pd_2[dpm]_2Cl_2$), (where dpm = $Ph_2PCH_2PPh_2$) for CO sorption, (Ir $[Me_2PCH_2CH_2PMe_2]_2$)CL for CO_2 sorption, and Ru $(CO_2)(PPh_3)_3$ for H_2 sorption. The most promising is ($Pd_2[dpm]_2Cl_2$) since it reversibly sorbs CO with ease even in the presence of CO_2, O_2, N_2, and H_2. All three complexes have rapid and quantitative uptake of gas.

c. Particle Control

Particle control devices can be classified into the following broad categories:

- Inertial.
- Electrostatic.
- Barrier.
- Granular bed.
- Combination.

Cyclones can be used to remove particulates from high-temperature gas streams also; however, the efficiency of cyclonic separation decreases with operating temperature. Furthermore, the efficiency decreases as the cyclone diameter increases as is needed for high

gas flow rates. Instead of increasing the cyclone diameter to handle these high flows, banks of small cyclones are usually arranged in parallel. Unfortunately, this arrangement is susceptible to plugging.

- Electrostatic Precipitators

  Another high-temperature as well as low-temperature method of particulate capture is electrostatic precipitation. The gas streams are usually close to 700°F (370°C). At these high temperatures, the electrical resistivity of the particulates is lowered and the removal efficiency is increased. The reliability of the hot precipitator, however, is questionable since even a relatively brief outage might cause severe damage to turbines. Additionally, the upper range of temperature is set primarily by operating instabilities caused by thermal ionization which results in sparkover and loss of corona generation.

- Filters

  The best available method for removing particulates from hot gases at present is filtering. Filters can be categorized as surface or depth filters.

  During the past few years, progress has been made in advancing these techniques to meet the end-use requirements.

CONCLUSION

In summary, there are several new processes/techniques under investigation. The only driving force is to obtain higher efficiencies, better economics, and meet the environmental requirements. However, the selection of any of these processes should be made only after thorough systems analysis.

REFERENCES

1. Anon., "Gas Producing Handbook," Hydrocarbon Processing, Vol. 58, No. 4, April 1979, pp. 99-170.

2. Anon., "Treating Tail Gas From Claus Sulphur Recovery Plants," Sulphur, No. 154, May/June 1981.

3. Case, G. D., and the Hot Gas Cleanup Task Force, "Chemistry of Hot Gas Cleanup in Coal Gasification and Combustion," Publication MERC/SP-78/2, Morgantown Energy Research Center, U.S. DOE, Morgantown, WV, 1978.

4. Christensen, K. G., and W. J. Stupin, "Comparison of Acid-Gas Removal Processes," Contract No. EX-76-C-01-2240, U.S. DOE and Gas Research Institute, April 1978.

5. Christensen, K. G., and W. J. Stupin, "Merits of Acid-Gas Removal Process," Hydrocarbon Processing, February 1978, pp. 125-130.

6. Elliott, M. A., Ed., Chemistry of Coal Utilization, Second Supplementary Volume, John Wiley & Sons, New York, NY, 1981.

7. Glasstone, S., Energy Deskbook, Contract No. AC05-7611R05114, U.S. DOE, June 1982.

8. Glazer, F., et al., Emissions From Process Producing Clean Fuels, Booz-Allen and Hamilton, Inc., March 1974.

9. Goar, G. B., and T. O. Arrington, "Guidelines Set for Handling Sour Gas," The Oil and Gas Journal, Vol. 76, No. 26, June 26, 1978, pp. 160-164.

10. Jablonski, G., "Evaluation of Gasification and Gas Cleanup Processes for Use in Molten Carbonate Fuel Cell Power Plants," Publication DOE/MC/16220-1306, Contract No. AC21-81MC16220, Morgantown Energy Technology Center, U.S. DOE, Morgantown, WV.

11. Kohl, A. L., and F. Riesenfeld, Gas Purification, Second Edition, Gulf Publishing Company, Houston, TX, 1974.

12. Lonsdale, H. K., "The Growth of Membrane Technology," Journal of Membrane Science, Elsevier Scientific Publishing Company, Amsterdam, 1980, pp. 81-181.

13. Morrison, G. F., "Hot Gas Cleanup," Report No. 1 (TIS/TR03), March 1979.

14. Parekh, Raj D., "Handbook of Gasifiers and Gas Treatment Systems," Publication WD-TIC-82/008-010, Contract No. DE-AC01-78ET10159, McLean, VA, 1982.

15. Paskall, H., "The Claus Sulphur Recovery Process," Sulphur, No. 160, May/June 1982.

16. Pfeiffer, J. B., Sulfur Removal and Recovery From Industrial Processes, Advances in Chemistry Series 139, American Chemical Society, Washington, DC, 1975.

B:11-25-85:vw:4a

Fuel Gas Separation/Upgrading

Fuel Gas Production

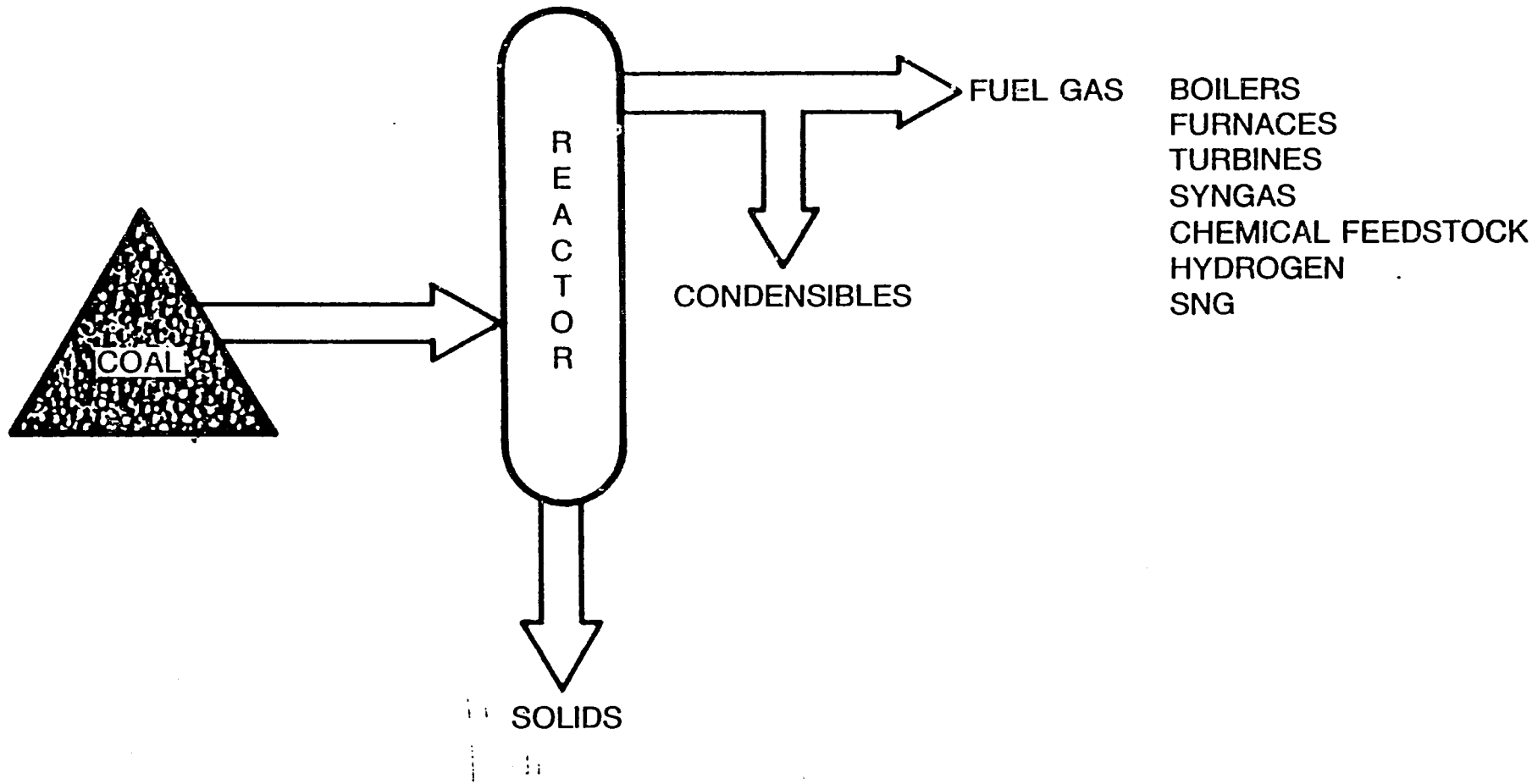

Fuel Gas Production Routes

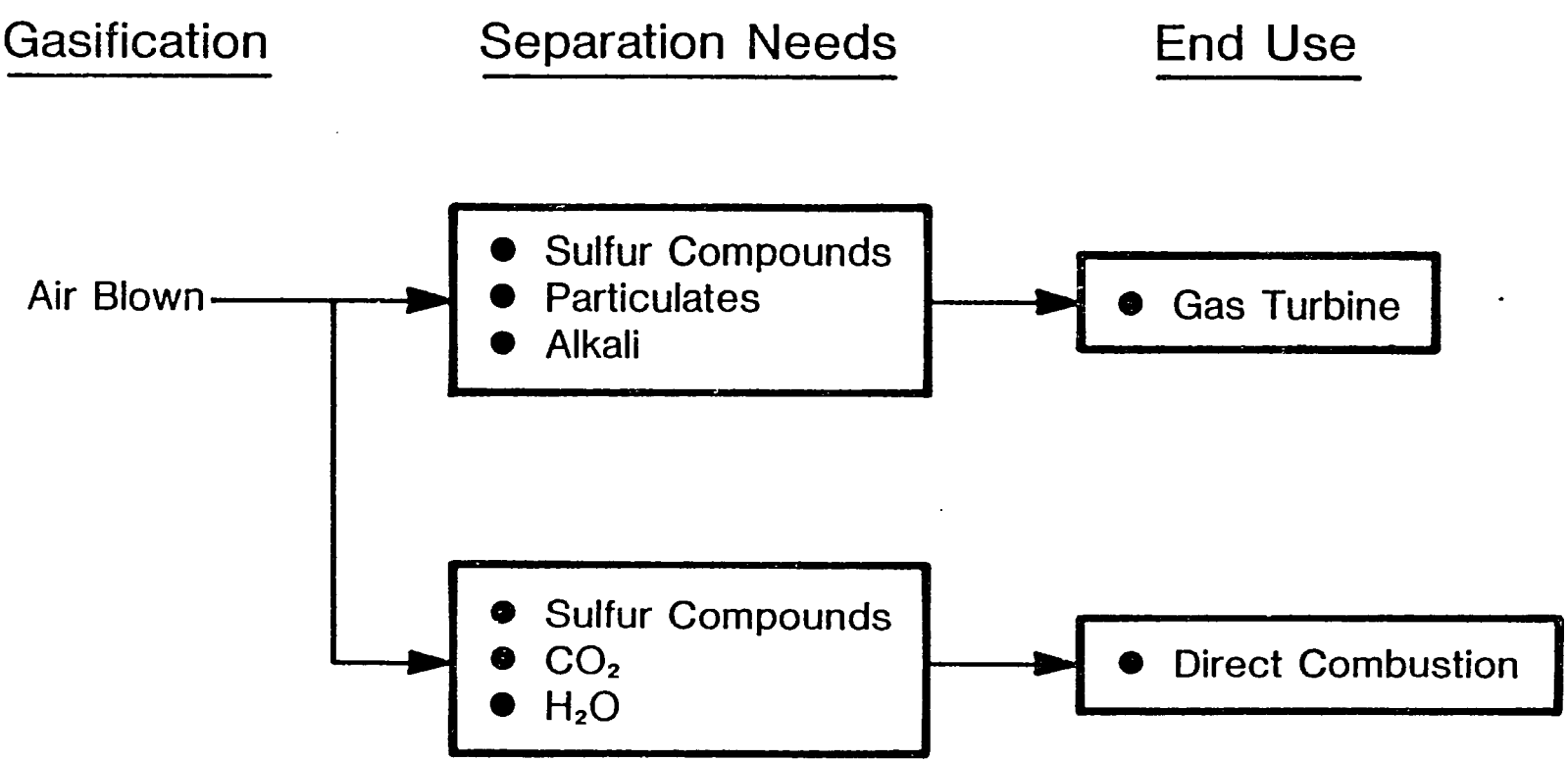

Fuel Gas Production Routes

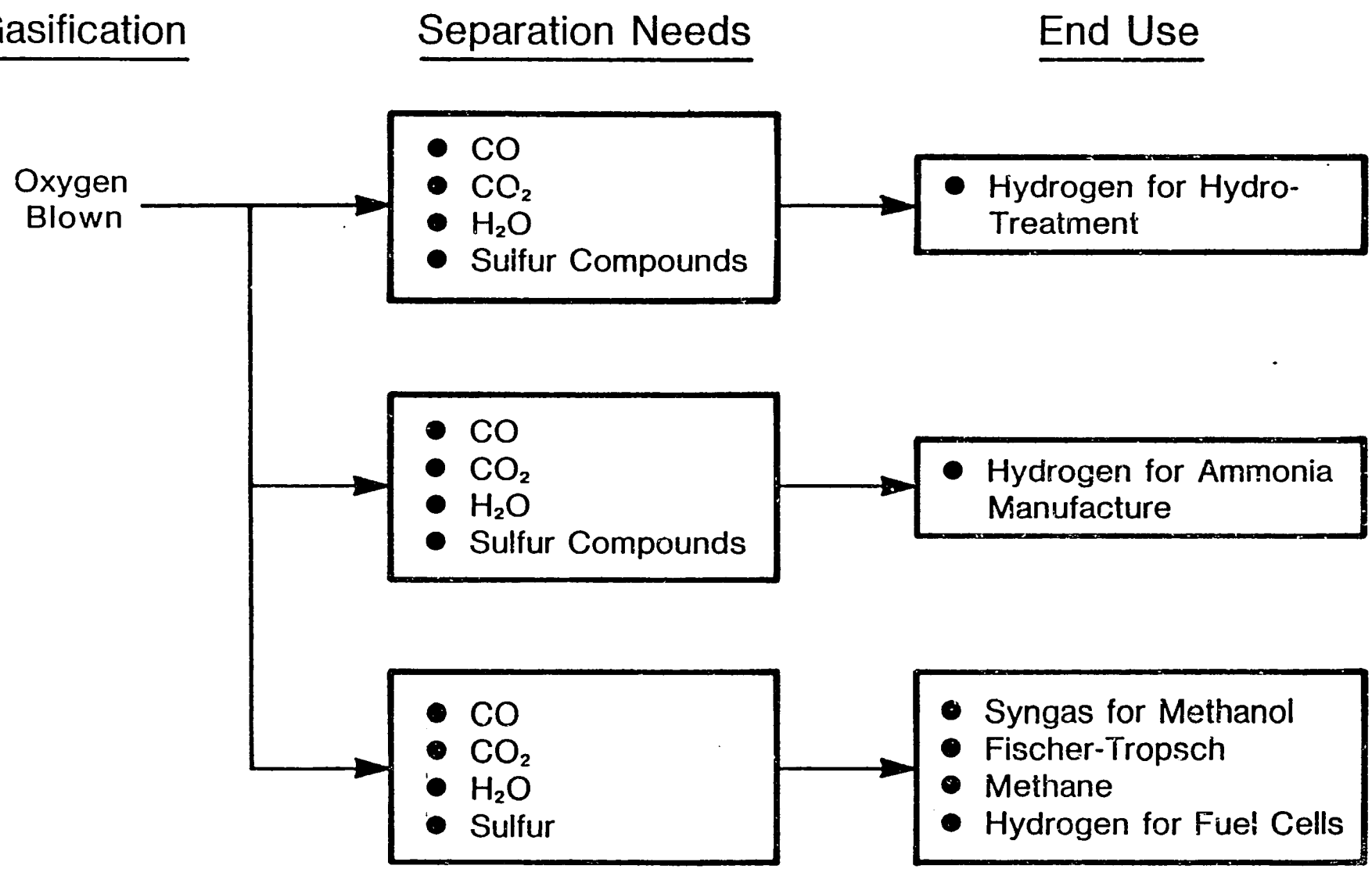

Fuel Gas Production Routes

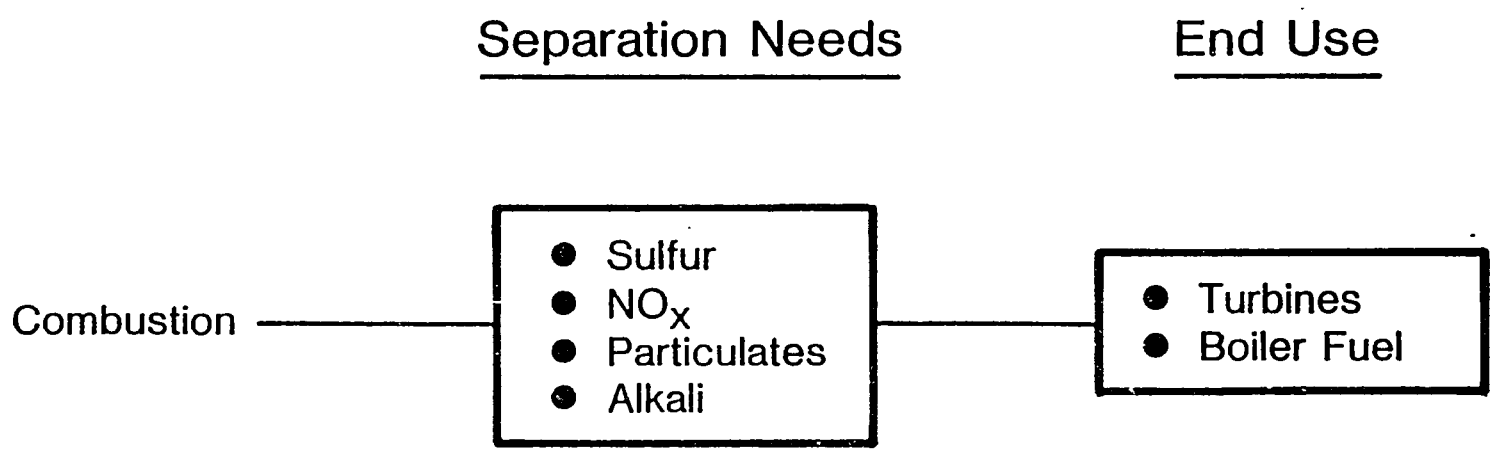

Process Options

- Low temperature (lower than 300°F)
- High temperature (greater than 1000°F)

Driving Forces

- Environmental
- Materials
- Process Needs
- Economics

Low Temperature Processes

- Physical Absorption
- Chemical Absorption
- Adsorption
- Unconventional
  - Membranes
  - Biological
  - Chemical Complexing

High Temperature Process

- Physical
  - Particle control
- Chemical
  - Alkali
  - Sulfur
  - Ammonia
  - Chlorides
  - Trace metals
  - Organics

Physical Absorption

- Organic Solvents
- No Chemical Reactions
- Regeneration of Solvent by Heat/Pressure
- High degree of selectivity to CO_2, H_2S
- Can remove COS, CS_2, Hydrocarbons
- Low Corrosion Rates
- High Operating Costs
- Commercial (Rectisol, Selexol)

Chemical Absorption

- Aqueous Solvent
- Chemical Reaction
- Low Affinity for Hydrocarbons
- High Corrosion Rates
- Commercial (Hot-Pot Process)

Adsorption

- Gas/Solid Contacting
- Highly Selective
- Commercial in 50's
- Making Comeback

Unconventional

- Membranes
- Complexing Agents
- Liquid CO_2, (CNG Process)
- Biological

Membrane Separation

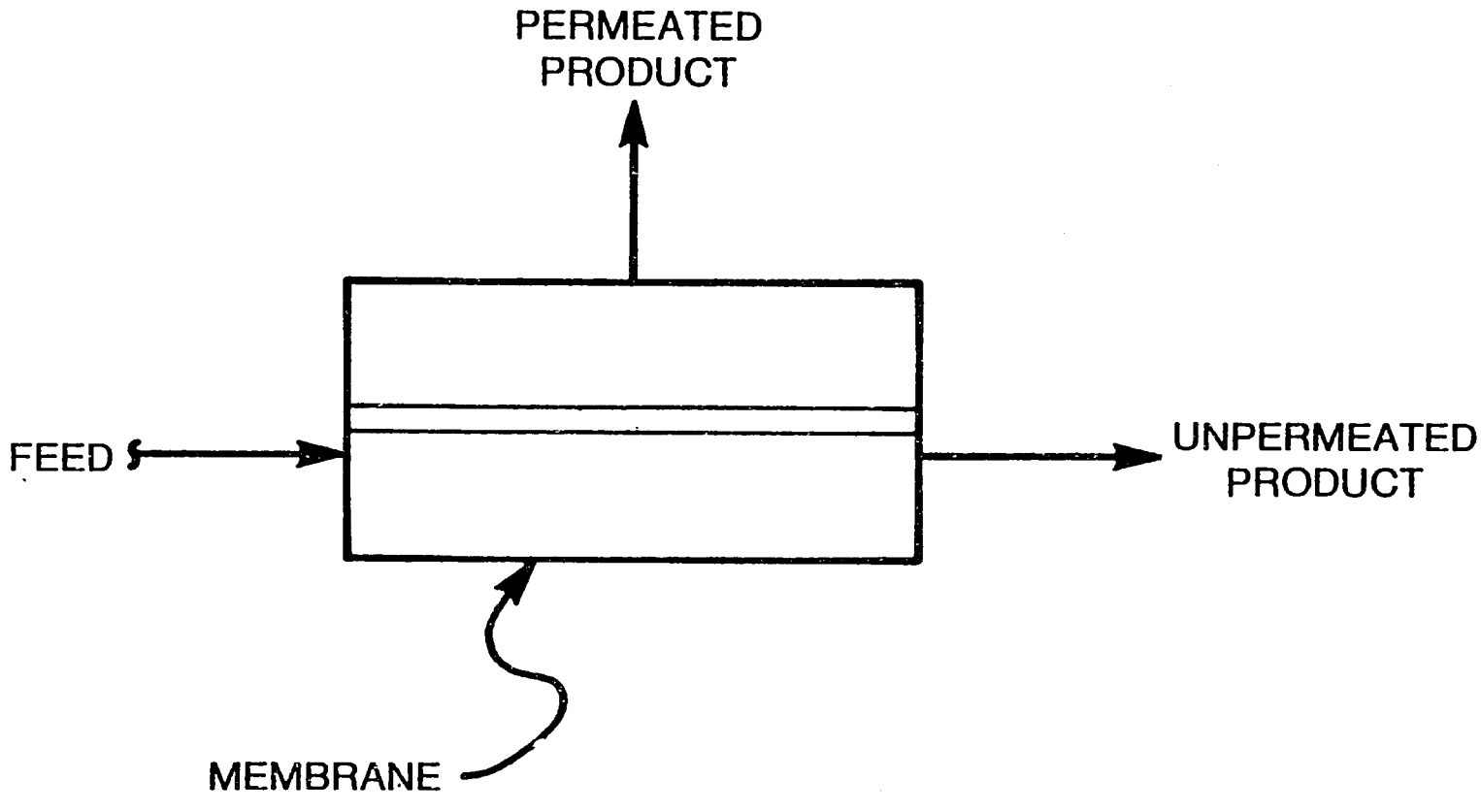

Membranes

- Polymeric
- Facilitated Transport
- Asymmetric
- Symmetric

Membrane Needs (Criteria)

- High Selectivity
- High Flux
- Improved Life

Status - Low Temperature Processes

- Conventional Commercial Process
  - Direct application to coal derived fuel gases needs further optimization
  - Are very energy intensive
- Unconventional Process
  - Most of the processes are in early phase of development
  - All of them need special consideration for application to coal derived fuel gas

Sulfur Control

- In-bed sulfur removal
- External sulfur removal

Status - Sulfur Control

- Demonstrated on PDU scale greater than 90 percent in-bed sulfur removal at KRW
- Completed laboratory scale testing of Zn-ferrite process
- Plans for PDU scale finalized

Particle Control

- Inertial
- Electrostatic
- Barrier
- Granular Bed
- Combination

Particle Control Devices

Device	Type
Electrostatic Precipitator	Electrostatic
Screenless GBF	GBF, Moving
Ceramic Cross Flow Filter	Barrier, Rigid
Ceramic Bag	Barrier, Flexible
Magnetically Stabilized GBF	GBF, Moving
Dry Plate Scrubber	GBF, Moving
Electrostatic GBF	GBF, Moving, Electrostatic
Electrocyclone	Inertial, Electrostatic
Fixed GBF	GBF, Fixed
Acoustic Agglomeration	Augmentation Concept

Status - Particle Control

Cross Flow Filter

- One element operated 80 hrs. on intermediate PFBC
  - Met environmental performance requirements
  - 15 to 20 inches of water pressure drop
  - Demonstrated tolerance to severe upset
- Has 7 to 10 time surface area to volume ratio of bag filter
- Potential for pressure imbalance during blow back of multiple elements
- Inconsistent manufacturing techniques resulted in some elements cracking

Status - Particle Control

Electrostatic Precipitation

- Subpilot scale PFBC test at 1450 deg. F
  - Met environmental performance requirements PFBC
  - 2 to 3 inches of water pressure drop
- Laboratory scale test to 1650 deg. F
  - Significant increase in current above 1550 deg. F

Status - Particle Control

Screenless Granular Bed Filter

- Operated 1500 + hrs. on AFBC
  - Met environmental performance requirements
  - 20 to 30 inches of water pressure drop
  - Demonstrated tolerance to upset
- Potential for pressure imbalance in media transfer lines
- Full scale concept design mechanically complex

Summary

- All new processes are still in the various stages of development
- Often process efficiency and cost advantages
- Selection of a given process requires in depth systems analysis

50,000 TON PER YEAR COAL WATER SLURRY PRODUCTION PLANT

C. C. Eich

Foster-Wheeler Corporation
U.S.A.

50,000 TON PER YEAR COAL WATER SLURRY PRODUCTION PLANT

by

C. C. EICH

I thought it might be of interest to you to report on the design start-up and successful operation of a 50,000 ton/year coal water slurry plant in the State of Tennessee in the United States of America. This plant uses the Carbogel (*) process for making heavy loaded coal water slurry of the 70% coal 30% water type with less than 1% chemical additives.

Approximately three to four years ago, Foster Wheeler Corporation and A. B. Carbogel of Sweden agreed to join forces in the U. S. A. and form a jointly owned company called Carbogel U. S. A. Inc. This company was to license the Carbogel technology in the U. S. and further develop the technology involved in coal water slurry manufacture for all types of coals. I am sure we all realize that the technique of forming slurry both in the mechanical aspects and the chemical addition and mixing aspects are very coal specific.

A complete laboratory was set up and a batch plant, capable of making one ton batches of slurry, was built and put into operation for developing the specific grindings and chemical requirements on a coal specific basis. We were thus able to take any coal; develop its particular slurrying recipe; check it out on a batch basis and predict the entire properties of the resultant slurry. We also are able to tailor the slurry to suit the coal and the end use of both from a technical and a commercial standpoint.

It soon became obvious, however, that this level development was not at all capable of producing the type of information which would be necessary to scale up the equipment for a full scale slurry plant. Information had to be developed using commercially available equipment such as mills, flotation cells, mixers of such a size as to be able to obtain complete performance data. This data could then be used to properly engineer, spec out equipment and do the detail engineering for a full size commercial plant. This data would also be used to determine the investment and operating economics of large plants. Foster Wheeler felt that with this data, we would be able to establish a firm price for engineering design and construction of such a plant and predict operating costs. It is our intention to build, own and operate such a plant in the future when the economics indicate that this would be a good investment. To this end, Foster Wheeler has a production license in the United States.

Foster Wheeler therefore decided to build a nominal 50,000 ton/year plant which would operate on a continuous flow basis using commercially available equipment.

We found an unused zinc ore reduction plant in Elmwood, Tennessee which we leased on a long term basis. This plant has in place material handling equipment, wet ball mills, flotation equipment, environmentally approved settling ponds and many other features which we could use in the conversion of this plant to a coal water slurry production plant.

A schematic diagram of the Carbogel process is shown in Figure 1. It consists of a wet ball mill, grinding section with screens and recycling of

rejects from the screens to obtain the proper range of coal particle sizes (20 mic - 200 mic). From there, the coal water is passed to a series of flotation cells which are used to beneficiate the coal by reducing the ash content. As part of the process of removing ash, we remove pyritic sulphur as well. The degree of ash removal obtained by this process is coal specific as some coals beneficiate better than others.

The Carbogel process does not require beneficiation in order to make a slurry. The degree of beneficiation and sulphur removal depends on the analysis of the total process economics as well as end product process requirements. Items to be considered are

1. relative cost of raw coal in relation to ash content and sulphur content;
2. ease of beneficiation in relation to the above;
3. effect of ash content of slurry on capacity of boiler if being used as boiler fuel;
4. effect of ash content or sulphur content on process if used in other processes, such as gasification or heating;
5. environmental requirement relative to emissions.

After flotation, the mixture is vacuum dried to a dryness very close to the end process -- 70% solid - 30% moisture -- at which the chemicals are mixed in which then produces a stable 70-30 coal water mixture.

Fugure 2 is an aerial view of the Foster Wheeler Elmwood plant showing the plant itself with the settling ponds.

After solving the normal minor mechanical start-up problems associated with a process of this type, our first commercial run was made in November producing the first 25 tons of slurry. This slurry was shipped to the D. O. E. test facility outside of Pittsburgh for use in a burner test which Foster Wheeler was performing. It was successfully burned.

In February of 1986, Foster Wheeler will test a 100,000,000 BTU/hour utility type burner in a totally water cooled boiler at a General Motors plant in Indiana. This test is being done under the joint sponsorship of Foster Wheeler, General Motors and EPRI. Two hundred fifty tons of fuel for this full scale test will be produced by Foster Wheeler at our Elmwood plant.

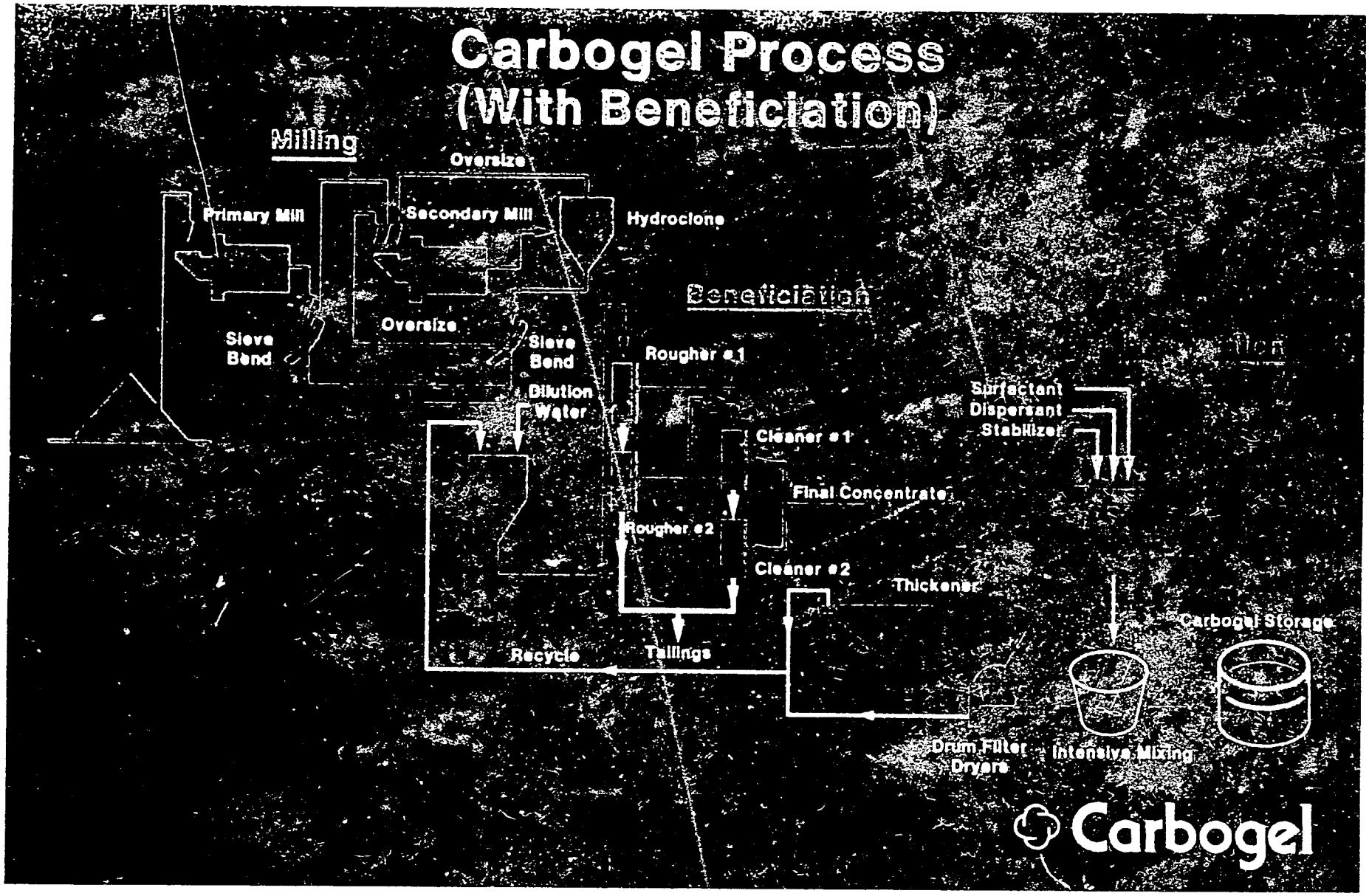
Carbogel Process
(With Beneficiation)
Milling
Oversize
Primary Mill
Secondary Mill
Hydroclone
Beneficiation
Oversize
Sieve Bend
Sieve Bend
Rougher #1
Dilution Water
Surfactant
Dispersant
Stabilizer
Cleaner #1
Final Concentrate
Rougher #2
Cleaner #2
Thickener
Carbogel Storage
Recycle
Tailings
Drum Filter Dryers
Intensive Mixing
Carbogel

CURRENT DEVELOPMENT AND FUTURE TRENDS IN THE USE OF WOOD FUEL IN FLUIDIZED BED GASIFIERS

Virgil J. Flanigan

Professor, Mechanical Engineering
University of Missouri-Rolla
Rolla, Missouri, U.S.A.

CURRENT DEVELOPMENT AND FUTURE TRENDS IN THE USE OF WOOD FUEL IN FLUIDIZED BED GASIFIERS

Virgil J. Flanigan

Professor, Mechanical Engineering
University of Missouri-Rolla
Rolla, Missouri 65401 USA

SYNOPSIS

This paper presents a discussion of several new and developing uses of fluid bed reactors in biomass gasification processes. The reactors include systems for producing low and medium Btu fuel gas along with syngas in certain applications. Fluidizing mediums using air, oxygen, and steam will be discussed along with feed materials of wood, charcoal and rice hulls.

INTRODUCTION

The fluid bed reactor was developed for use in the petrochemical industry in the 1940's(1). Principally, the development found its use in cracking units producing light hydrocarbons from heavier crude oil fractions. The standard fluid bed system normally defines a vessel with a height to width ratio greater than one containing some type of inert bed material, usually sand. The system design includes provisions for feeding and means of supplying a controlled fluidized medium uniformly through the bed material. Fig. 1 is the normal or standard sketch of a fluid bed system. The distributor plate is designed to produce a pressure drop of the magnitude to insure an equal flow of the fluidizing medium through the holes in the plate. The equal flow through the plate results in the inert material receiving a consistent flow per unit area eliminating channeling and other bed flow problems.

The fluidizing medium flow rate is adjusted to establish the desired bed characteristics. The initial point of interest is the incipient fluidization condition defined by a flow rate sufficient to just provide dynamic support to each individual bed particle. This incipient point is the first condition where the pressure drop across the bed is equal to the density of the bed times the height of the bed. Further increases in the flow rate produces the desirable bubbling bed phenomena. As the rates are increased the bubbles become larger, limited only by the reactor geometry. Once the bubbles grow to span the reactor cross section a slugging condition is defined. An even further increase in the flow will result in an entrained bed system. The different conditions: incipient, bubbling, slugging, and entrained reactor bed are depicted in Figs. 2 through 5.

The designed height of the reactor must provide sufficient height for disengaging the bed material returning the bed to the bed inventory. In some cases an increased area can be used to insure this disengaging level. The increased area reduces the product velocity resulting in a loss of aerodynamic support. Figs. 6 and 7 show these systems with the disengaging heights defined in the figures. With this simple review of the fluid bed physics, the important issues in this paper are the utilization of the fluid bed principles in biomass gasification processes. In order to examine these developing systems a list of the advantages and disadvantages, as relating to the conversion processes, have been listed.

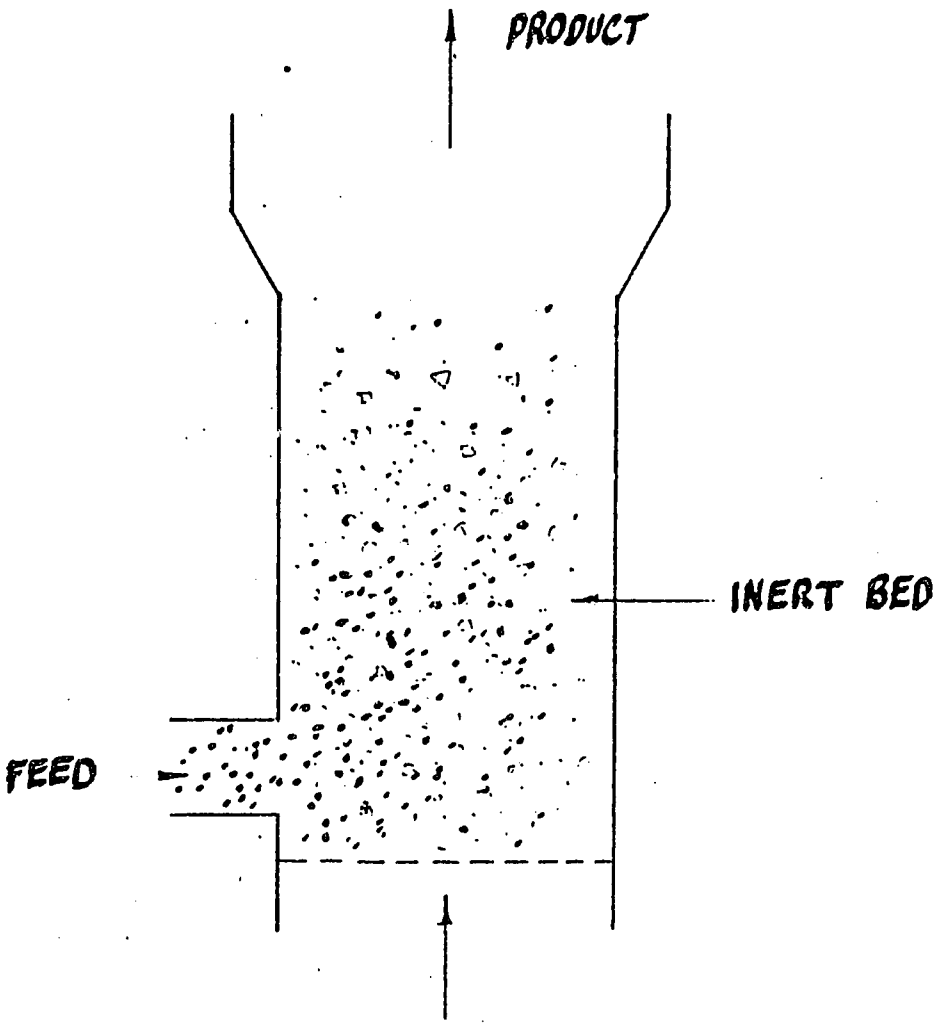

FLUIDIZING MEDIUM
FIGURE 1 FLUIDIZED BED

FIG. 1. FLUIDIZED BED

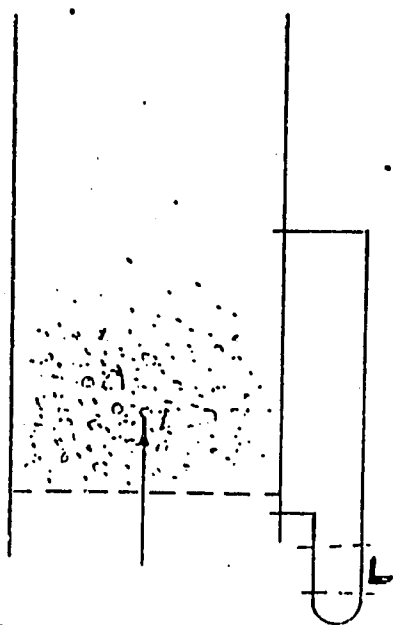

INCIPIENT FLUIDIZATION

$\Delta P = \rho_{BED} L \frac{g}{g_c}$

FIG. 2

BUBBLING BED

FIG. 3

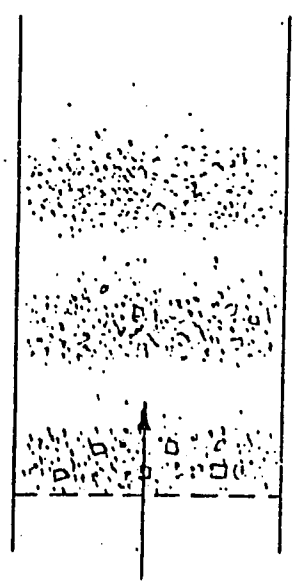

SLUGGING BED

FIG. 4

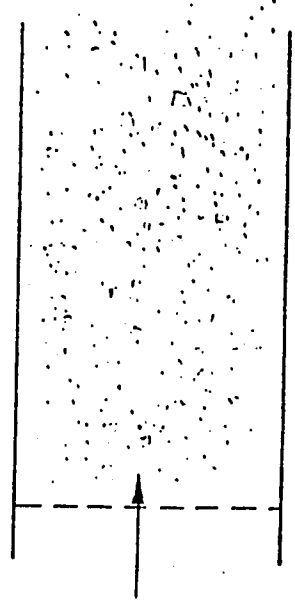

ENTRAINED BED

FIG. 5

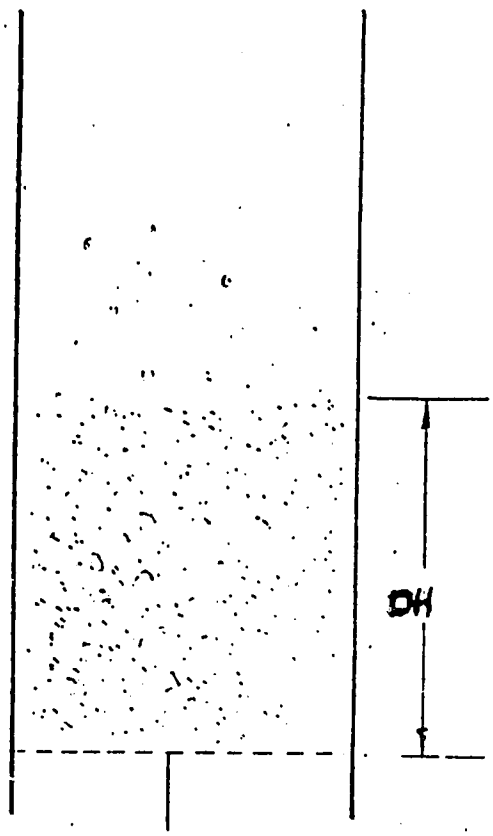

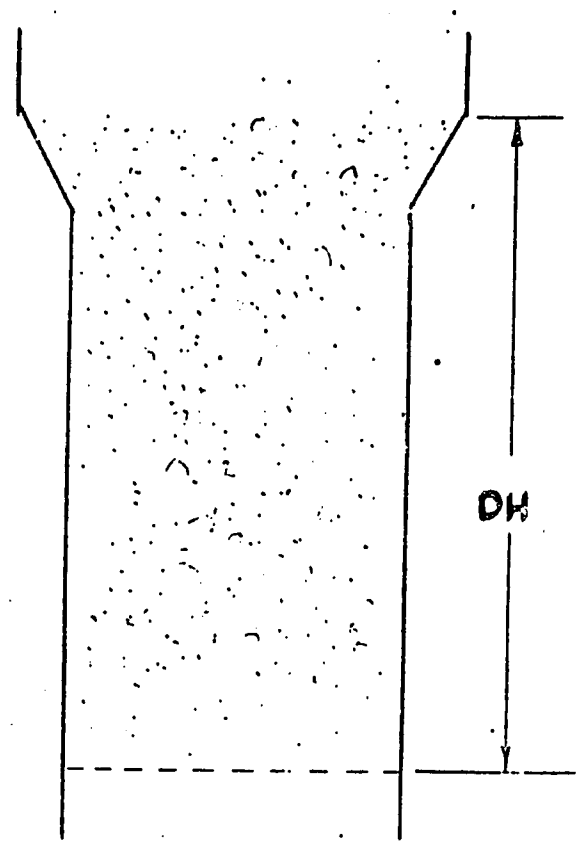

DH- DISENGAGING HEIGHT

FIG. 6

FIG. 7

The advantages are:

1. The bubbling bed of the fluid bed system adopts the properties of a fluid.
   a. The temperature and pressure can be measured and controlled.
   b. The rapid circulation provides a constant temperature throughout the bed.
   c. The bed material provides a large thermal mass dampening small perturbations.

2. Feed material inserted in the bed demonstrates:
   a. Large flux rates as compared to fixed bed reactors.
   b. The possibility of high moisture content without severe operating problems.
   c. Heat transfer between the bed material and the individual cold feed particles.
   d. High ash content materials can be used.
   e. Ash can be easily removed from the bed.
   f. Particle size variations are permitted.

The disadvantages are:

1. The systems are complex.
   a. Larger fans are required.
   b. Increased power requirements.
   c. expensive material required in construction.

2. Product gas is dirty.
   a. Large bed carry-over.
   b. Increased tar and char production as compared to normal down-draft system.

DISCUSSION

One of the major disadvantages of these systems was the normal design complexity. The University of Missouri-Rolla (UMR) Gasification Research on Wood (GROW) project, has been testing a small fluid bed system which has demonstrated a much simpler system design. The .1016 meter (4 in.) reactor is constructed of a 1.83 meters (6 ft.) black iron pipe. Figures 8 and 9 provides a schematic of the system (2). The distributor is a simple .1524 meter (6 in.) layer of washed gravel. The developed system would be a stand-alone engine system for pumping water or generating electricity. Charcoal is the chosen fuel principally because it reduces the clean-up requirements of the feed system. The fan(if required) is driven by the engine. Present levels of the operation suggested a 6 to 7 kilowatts output and the design cost is targeted a 1,000 to 1,500 dollars.

In the same regard, the GROW staff (3) have been developing a similar reactor system for rice hulls. This unit is .1524 m (6 in.) in diameter and approximately 3 meters (10 ft.) high. Fig. 10 provides the schematic of the unit. The real point of this fluid bed system development is its advantages to produce a

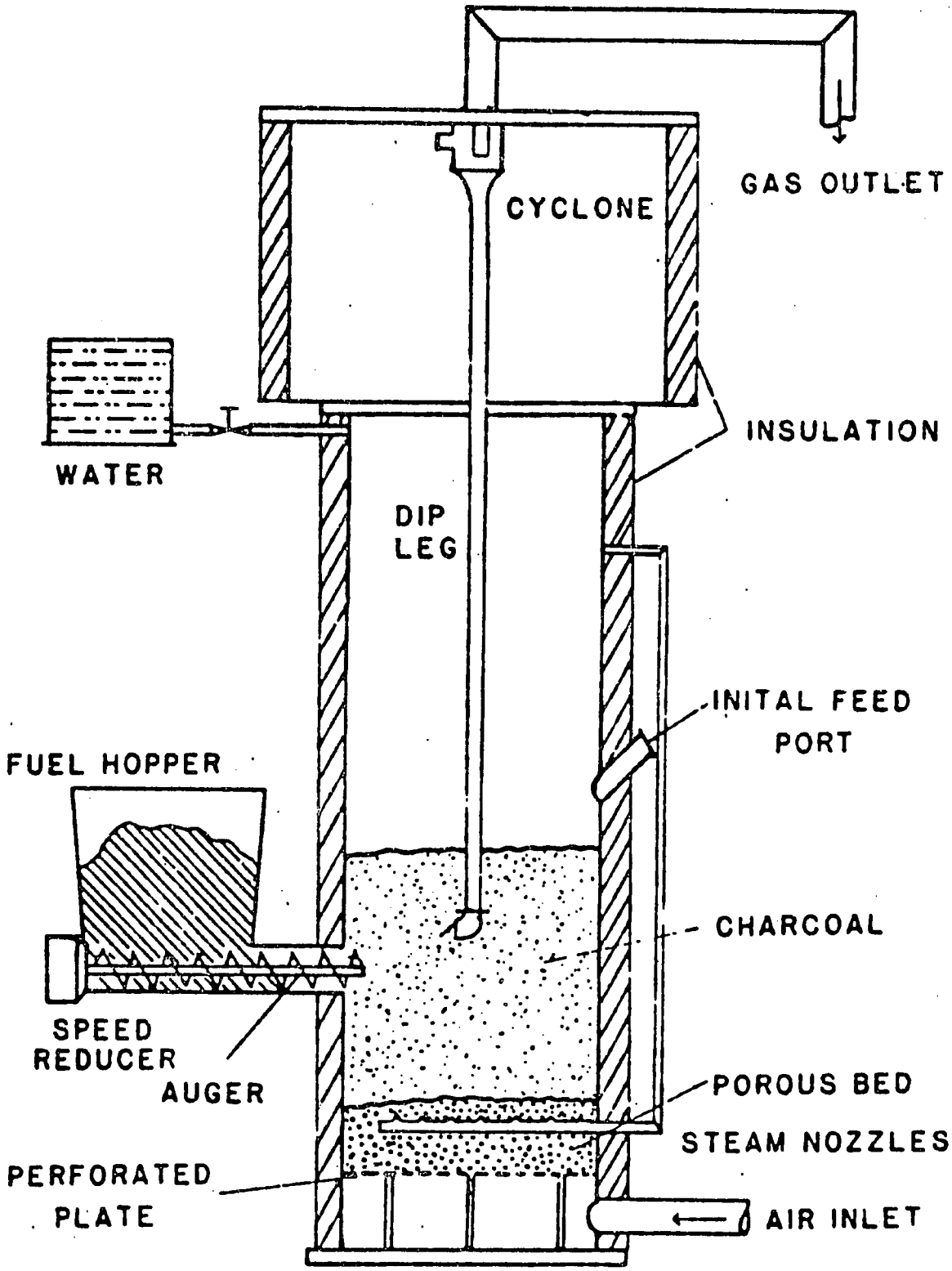

FIG. 8. SMALL FLUID BED SYSTEM

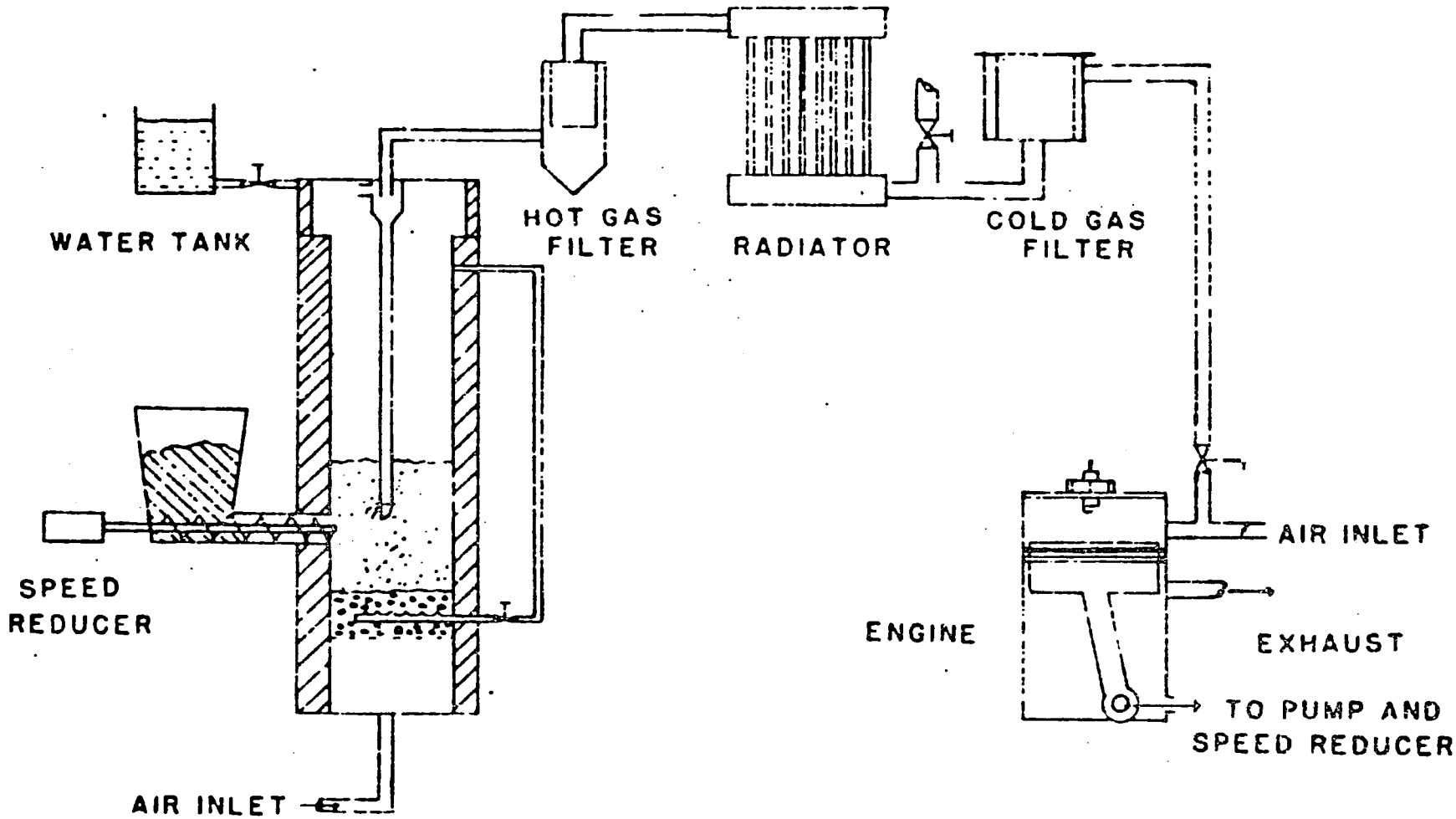

FIG. 9. SCHEMATIC OF OPERATION OF SMALL REACTOR

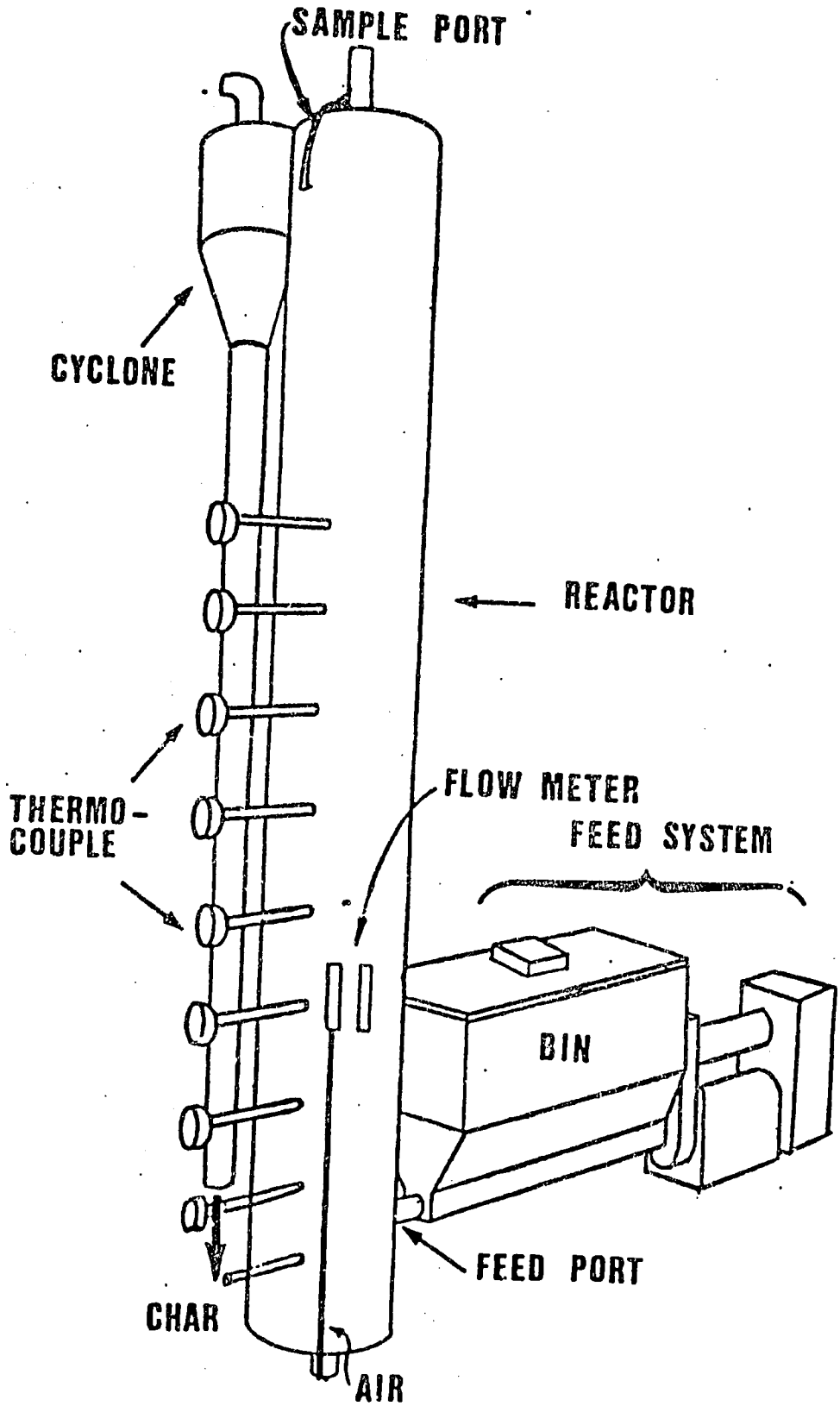

FIG. 10. REACTOR SYSTEM FOR RICE HULLS

high performance design for rice hulls. Rice hulls are one of the most difficult fuels to convert to usable energy.(4) There are several reasons for the rice hull gasification problems, with the principal difficulty focused on the ash properties. The ash content is usually 20%, with a 95% silica content along with traces of other alkaline materials. The silica encapsulates the raw carbon in the hull and high temperatures crystallize the silica, making the carbon almost impossible to use. The same high temperatures generate a sticky hull surface conglomerating the hulls in the conversion reactor.

By using the temperature measurement and control characteristics of the fluid bed reactor, a system can be designed to provide a gasification temperature between 704°C (1300°F) and 982°C (1800°F). This range permits good gasification performance using ground hulls with carbon conversions above 70%. The design also provides a low velocity high residence time within the reactor. The long solids residence time is necessary for these carbon conversion levels. The temperature control alleviates the problems of a sticky ash residue and the high ash levels are handled easily. The ash is removed with the product gas and separated using a high efficiency cyclone.

Operating performance is demonstrated in Fig. 11 and simple efficiency estimates would suggest operating a 10 kw power plant with this .1524 meter (6 in.) unit. Clean-up equipment and other operating changes are presently being investigated.

The flux rates of the feed are listed as an advantage in the earlier discussions. The multi-solid system developed by Battelle Laboratories (Columbus) (5) has demonstrated even higher rates than the normal fluid bed gasifier. The multi-solid system certainly points out the flexibility and level of development that is possible in using the fluid bed concepts. Fig. 12 shows the unit operation. Sand is used to provide the gasification energy by circulating the heated sand from the combustor into the steam fluidized bed reactor. Through-put rates of 9765 kg/m²hr (2000 lb/ft²hr.) have been demonstrated using wood chips or sawdust. The gas produced is a medium Btu gas 18630 kJ/m³ (500 Btu/scf) and the production requires no oxygen streams. Several experiments indicated that the feed moisture content did not affect the gas quality, only the conversion percentages. The typical run data produced is shown in Table 1. The gas production cost based on a 29300 kw (100 MM Btu/hr.) plant was suggested to be 1.36 cents/kw/hr. ($3.99/MM btu). The system has demonstrated good performance with commercialization expected soon.

The Institute of Gas Technology (IGT) has constructed a pilot plant facility to examine an oxygen/steam gasification approach.(6) The system is a pressurized fluid bed system designed to operate up to 982° C(1800°F) with pressures of 3446 kPa (500 psig). Fig. 13 shows the schematic of this system. Table 2 shows the results of earlier runs from this system.

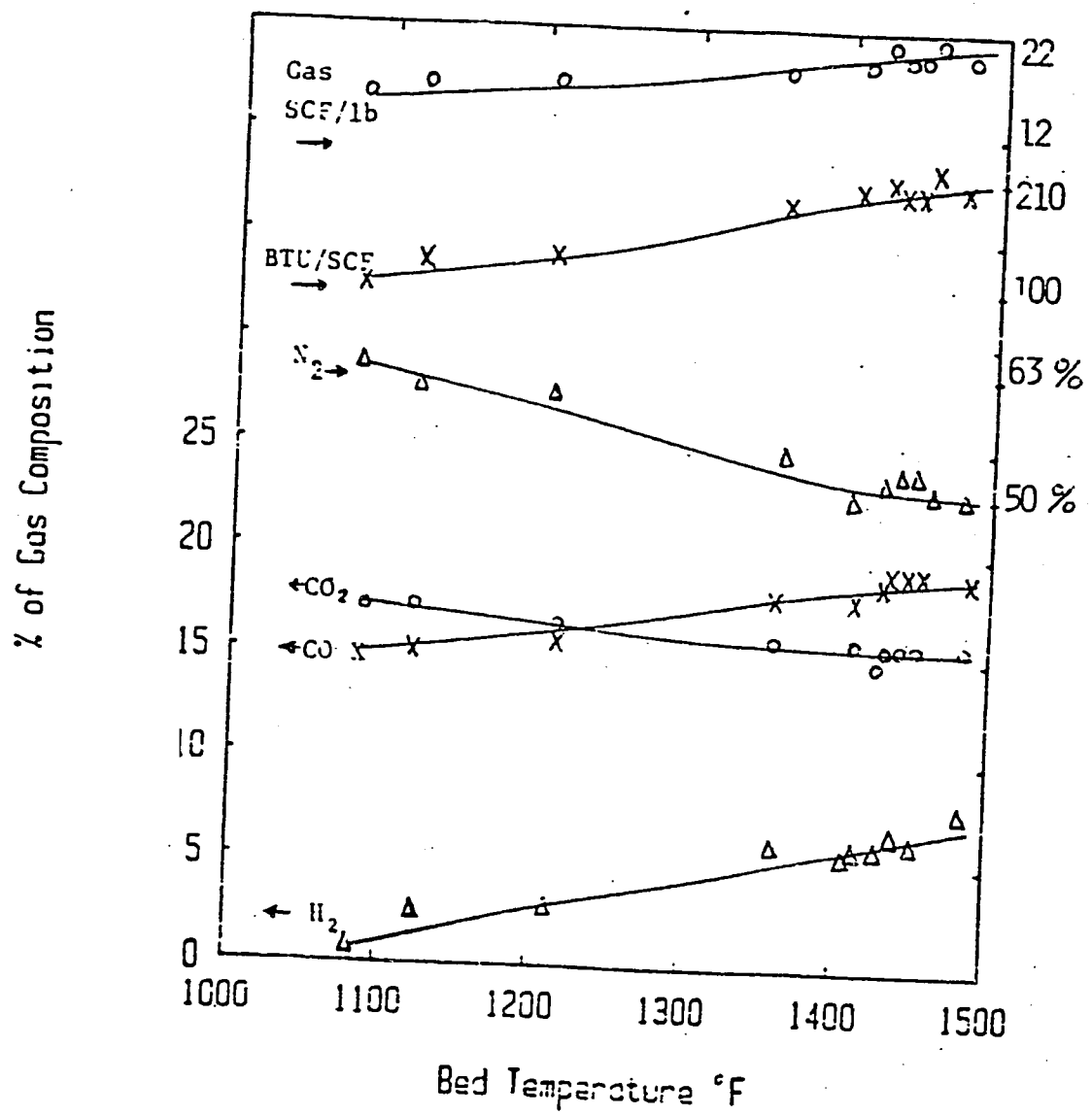

FIG. 11. OPERATING PERFORMANCE OF 6" SYSTEM

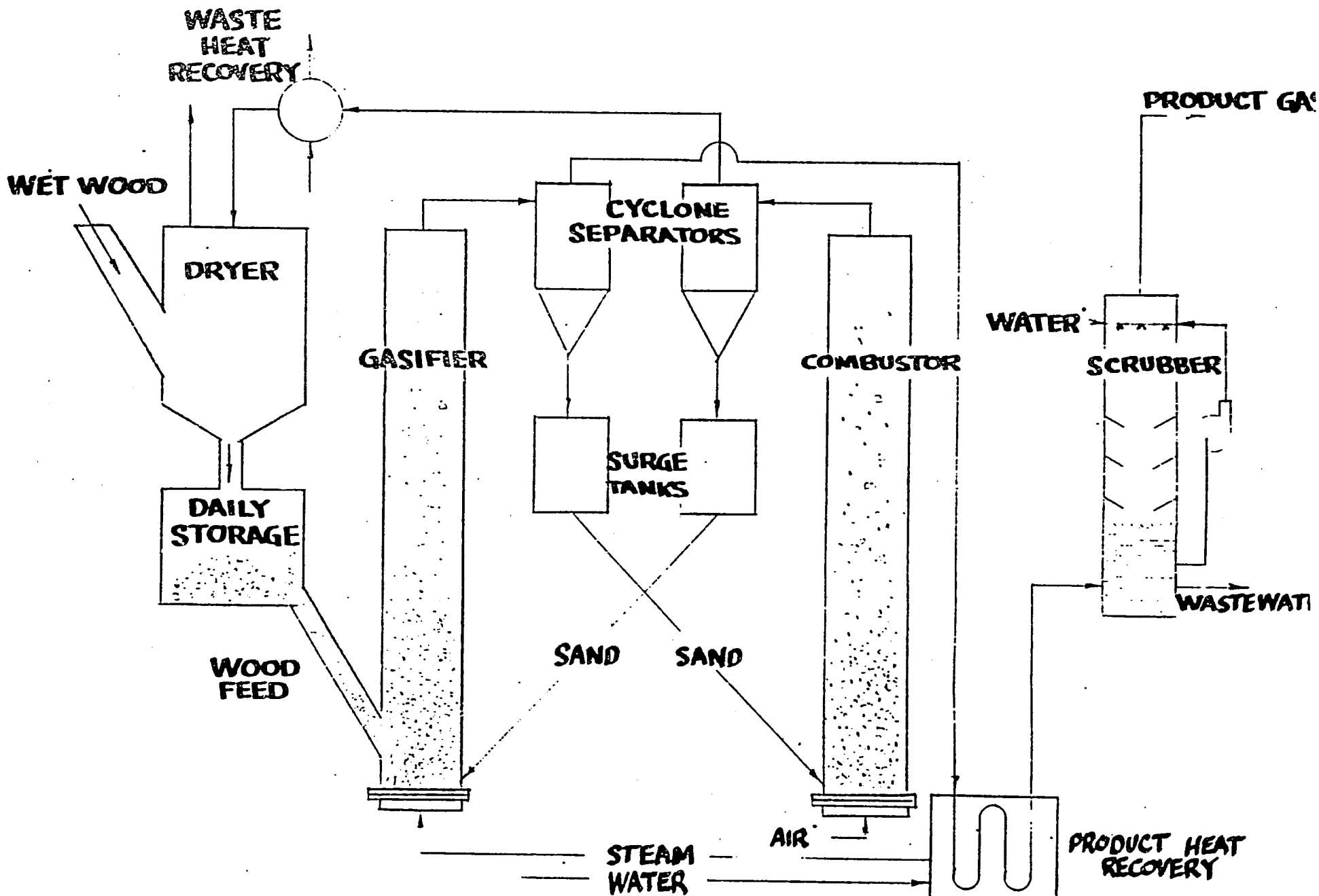

FIG. 12. BATTELLE'S BIOMASS GASIFICATION SYSTEM

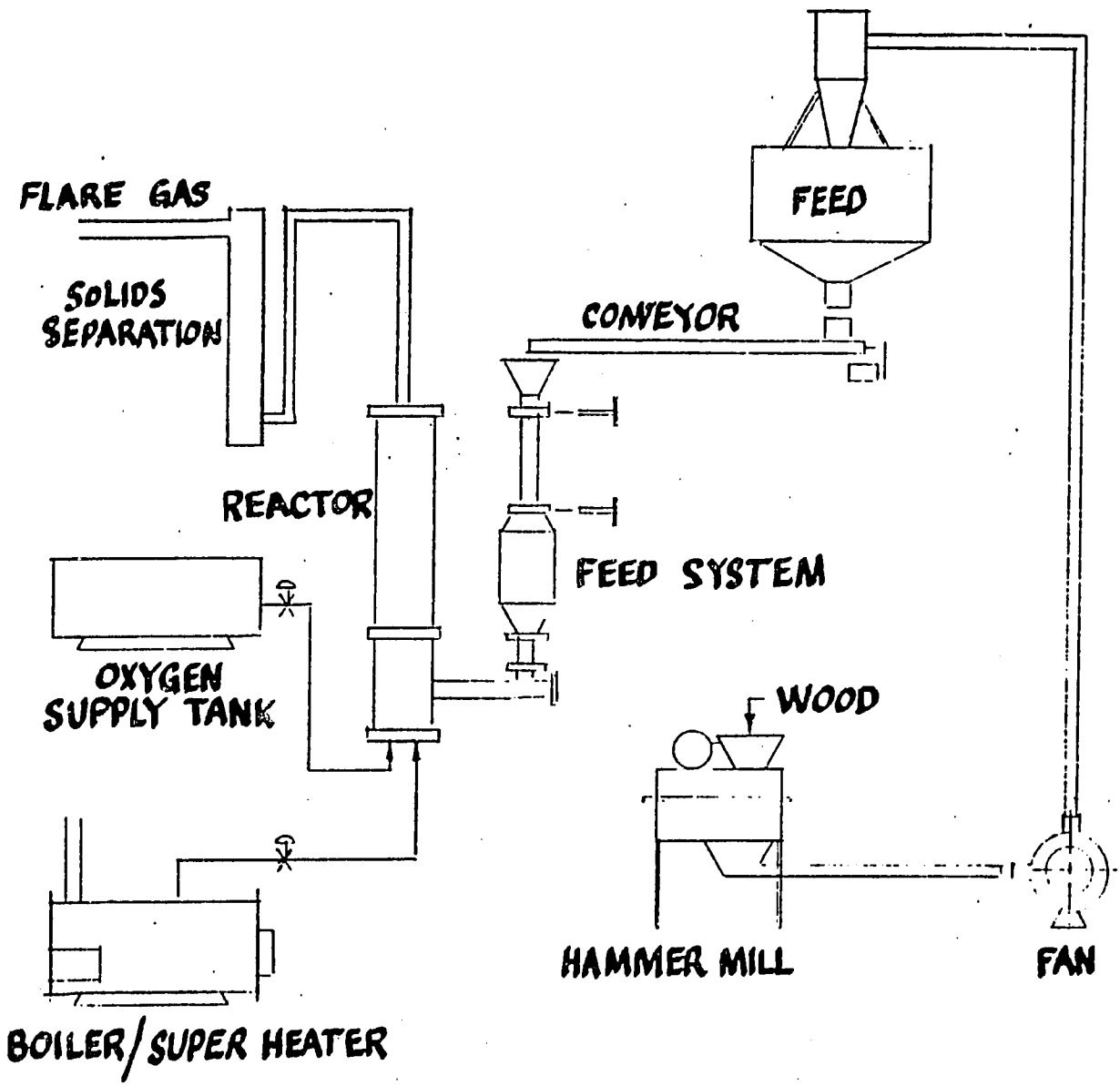

FIG. 13. IGT PILOT PLANT UNIT

Considerable work is being done with this reactor and economic and performance comparison will be available in the near future.

The University of Missouri-Rolla has demonstrated another approach to heating the bed by using an in-bed heater to provide the necessary gasification energy.(7) The system schematic is shown in Figs. 14, 15, and 16. The idea is to supply high temperature flue gas to the tubes submerged in the bed, thus transferring energy into the bed material in the reactor. The flue gases can be generated by using the char and tar produced along with an additional quantity of green biomass resource, if required. The waste energy stream can be used to generate the steam for fluidization. The bed temperature controls the CO, H_2, char, tar, and the Btu level of the product gas produced. The splits are determined by the end use of the gas: be it methanol, fuel gas, or gas turbine energy. Sample data from the system are shown in Table 3.

A recent paper at the IGT conference suggested that the Italians have a commercial system with in-bed heating.(8) Ergon Fluid Bed of Jackson, Mississippi is developing an interesting in-bed circulating system. Several years ago Deborah Fluidized Combustion in England sold several in-bed circulating combustion systems. Ergon Fluid Bed has modified the system to provide a multi-dimensional circulation along with variations in the feed points. The most important feature presently identified is increased bed residence time permitting even greater CO/H_2 production levels if desired. The funding of the demonstration project of the Ergon Fluid Bed design is being considered by several different funding agencies. The use of the in-bed heating developed at UMR is also being considered in the Ergon design.

SUMMARY

In summary, the design advantages of the fluid bed system provide innumerable opportunities for biomass gasification. The above discussion are just a few of the developing systems that point-out the capabilities of these designs. During the next several years many innovative systems will be built using the important features. Those of us interested in these systems will be challenged to use the concepts to provide a more efficient use of these valuable biomass resources. Fluid bed systems will be used as an integral part of total conversion plants providing gas for heating, power production and for the production of liquid fuels. These systems will not only provide efficient conversion but will provide environmentally acceptable operations.

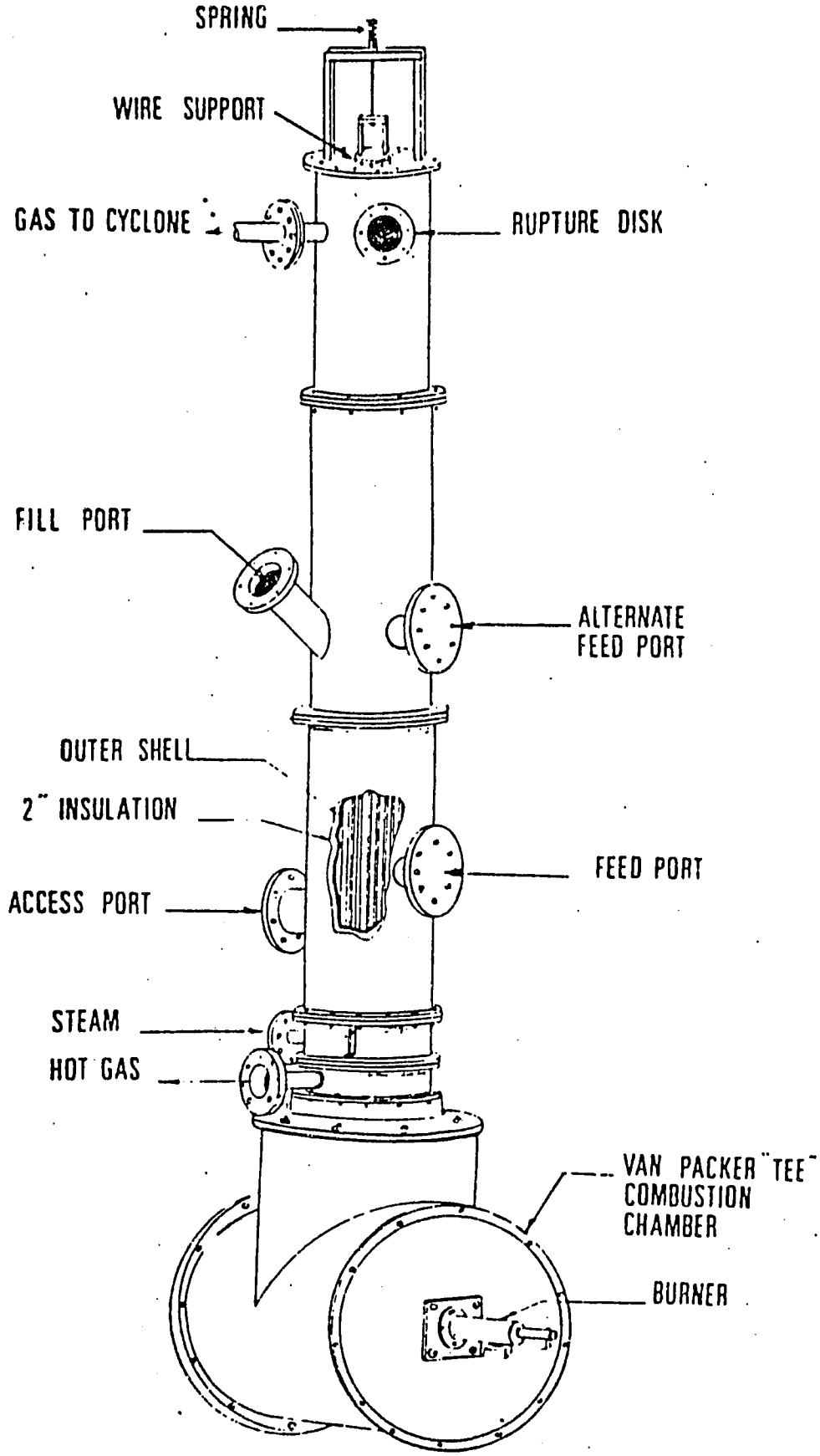

FIG. 14. INDIRECT FIRED WOOD GASIFIER

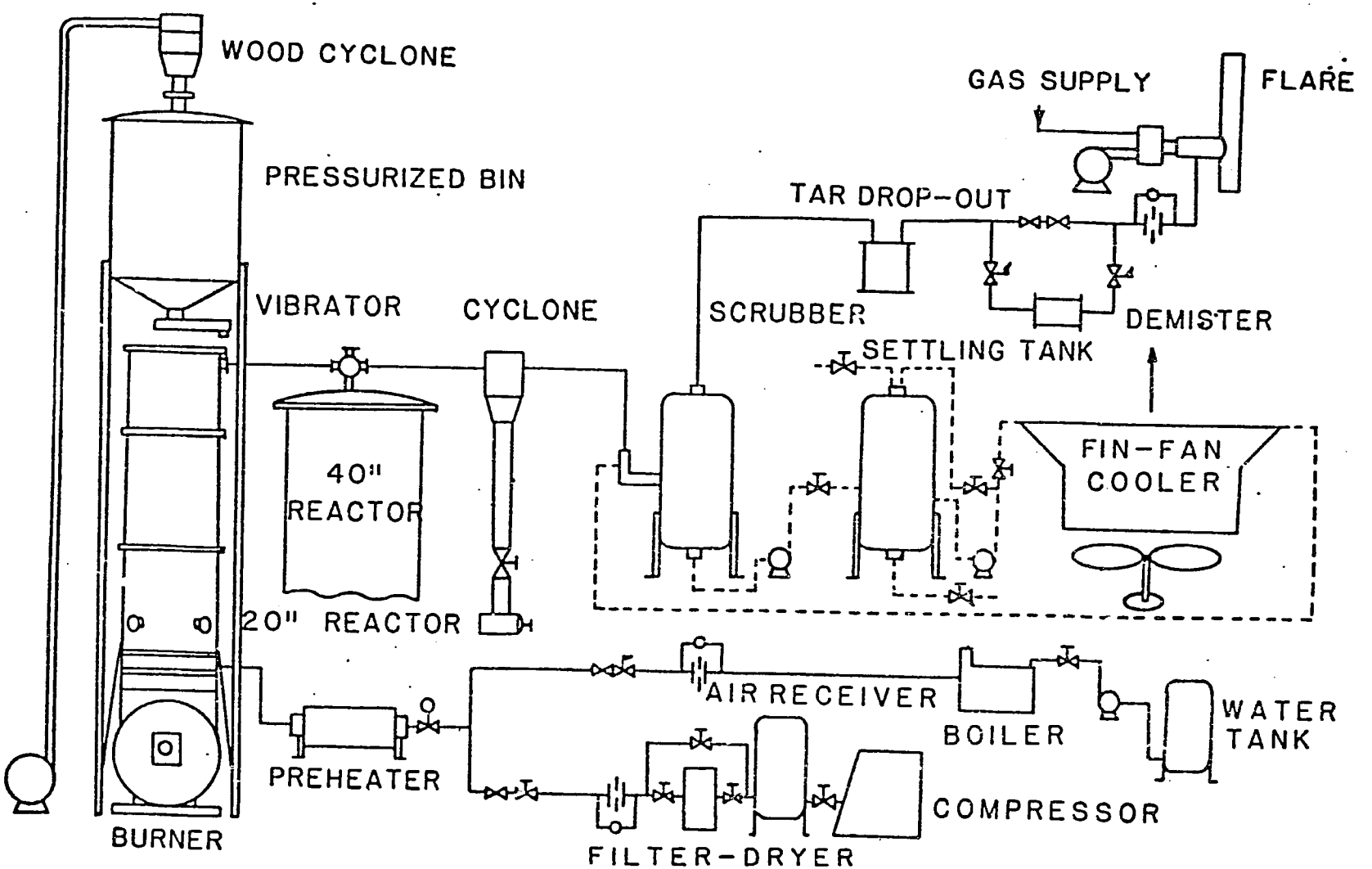

FIG. 15. GASIFIER SYSTEM FLOW DIAGRAM

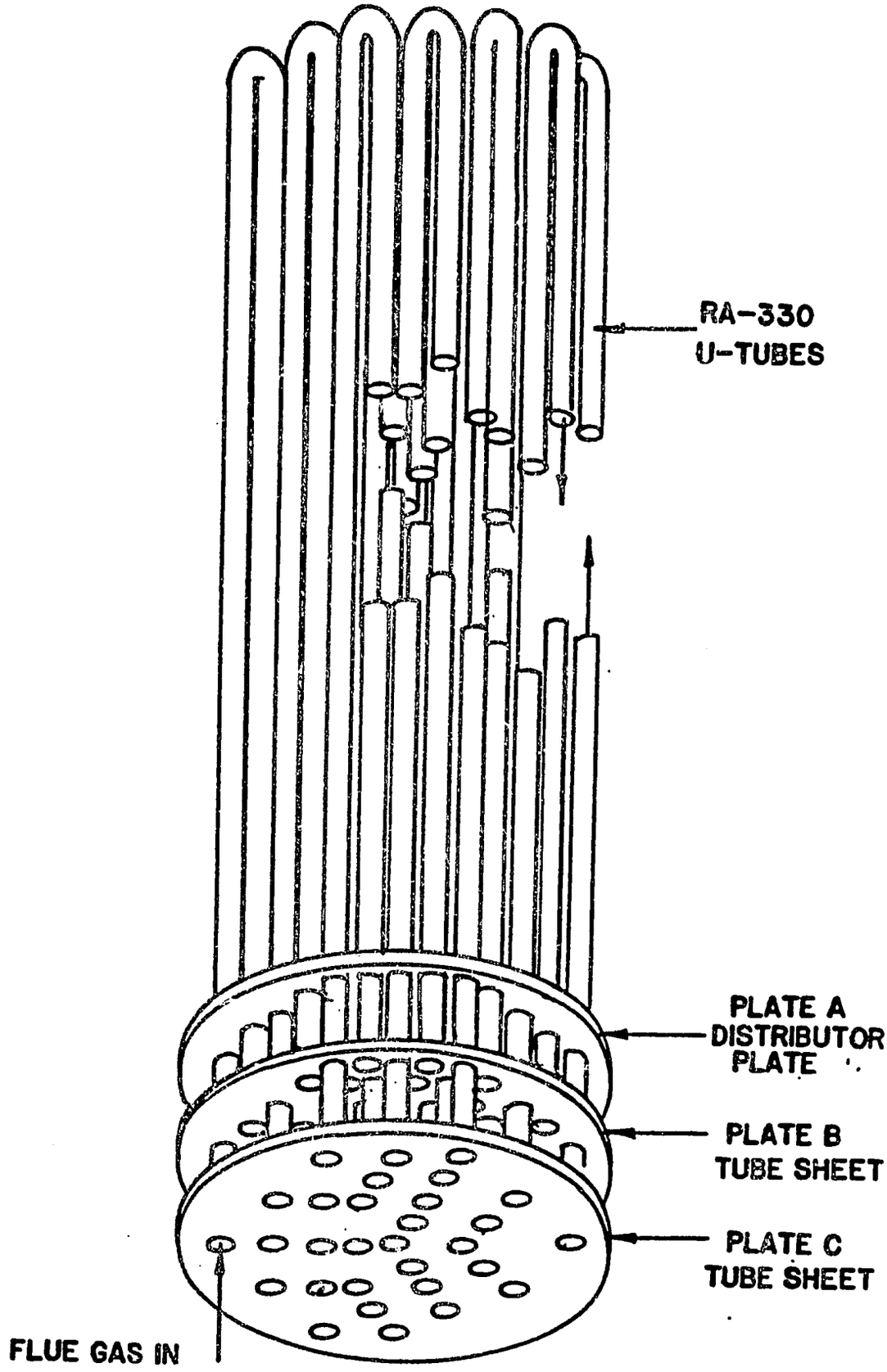

FIGURE 16. FIRED TUBES

REFERENCES

1) Zenz, F.A. and Donald F. Othmer. "Fluidization and Fluid Particle systems". Reinhold Publishing Corp., New York, New York. 1960.

2) Flanigan, V.J. and William O'Neill. "Small Fluidized Gasifier Using Charred Biomass". Proceedings International Producer Gas Conference. 1984.

3) Flanigan, V.J., W. Eric Huang, Oliver C. Sitton, and Bin Y. Xu. "Design and Operation of a 6.0 Inch Fluidized Bed Gasifier for Rice Hulls". Proceedings of the Institute of Gas Technology Symposium Energy from Biomass and Wastes IX, Lake Buena Vista, Florida. 1985.

4) E.C. Beagle, "Rice Husk Conversion to Energy". (Draft Copy), Food Agriculture Organizations for the United Nations, 1973.

5) Feldman, H.F., M.A. Paisley, and H.R. Applebaum. "Conversion of Forest Residues to a Methane Rich Gas in a High Through-put gasifier." Presented at the 16th Biomass Thermochemical Conversion Contractor's Meeting, Battelle Northwest Pacific Laboratory/Department of Energy, Portland, Oregon. 1984.

6) Kosowske, G. M. Oneschak, and S. Babu. "Development of Biomass Gasification to Produce Substitute Fuels". ibid. 1984.

7) Flanigan, V.J., A. Punyakumleard, H.H. Sineath, and Oliver C. Sitton. "20 Inch Fire Tube Gasification System". ibid. 1984.

8) Cogliati, G., G. Missoni, and E. Hofstetter. "Fluidized-Bed Gasification of Wood in a 12-Tonne/Day Plant for Medium-Btu Gas Production". Proceedings of the Institute of Gas Technology Symposium Energy from Biomass and Wastes IX, Lake Buena Vista, Florida 1985.

Run Number	2.13	3.20	3.23
Run Condition	S	N-S	N-S
Wood Type	Bark	Gum	Sawdust
Moisture, %	20.40	15.00	40.00
Wood Feed Rate, Kg/hr	48.53	157.82	154.20
Dry Feed Rate, Kg/hr	39.00	134.00	93.00
Gasifier Temperature, C	800.00	744.00	699.00
Gasifier Pressure, KPa	14.51	19.35	23.50
Nitrogen Feed, Kg/hr	0.00	46.00	58.00
Steam Rate, Kg/hr	143.00	198.00	195.00
Gasifier Gas Velocity, m/sec	9.37	4.85	4.59
Combustor Temperature, C	845.00	832.00	882.00
Combustor Pressure, KPa	15.20	17.28	23.50
Combustor Gas Velocity, m/sec	.46	.66	.42
Product Gas Rate, NM^3/Kg-MAF	.63	.64	.55
Carbon Conversion to Gas, %	58.80	59.68	47.95
Product Gas Composition, % N_2 Free			
Hydrogen	22.77	18.21	14.16
Carbon Dioxide	20.01	15.04	12.02
Ethylene	6.26	4.53	4.74
Ethane	.90	.91	1.06
Acethlene	0.00	.23	0.00
Methane	14.18	16.61	16.26
Carbon Monoxide	35.85	44.51	51.75
H2/CO Ratio	.64	.41	.27
Product Gas HHV, KJ/NM^3	16730.00	17214.00	17587.00
Wood Analysis, % Dry Basis			
Volatile Matter	74.52	83.47	81.92
Fixed Carbon	16.94	15.72	17.43
Ash	8.54	0.81	0.65
Carbon	47.06	49.94	53.92
Hydrogen	5.74	5.30	6.53
Nitrogen	.39	.16	.21
Chlorine	.01	.02	.04
Sulfur	.11	0.00	.04
Oxygen(by difference)	38.15	42.77	38.61
KCal/Kg (dry)	4335.69	4726.00	5010.12

N - Nitrogen
S - Steam

TABLE 1. BATTELLE LABORATORIES COLUMBUS MULTI-SOLID SYSTEM TYPICAL GAS

Test No.	GT-1	GT-2	GT-3
Pressure, KPa	2231.00	2231.00	2127.00
Temperature, °C	816.00	899.00	982.00
Feed Rate, kg/hr(wet)	369.00	313.00	332.00
Moisture, wt. %	8.35	9.50	9.70
Steam, kg/kg Feed (wet)	0.79	0.71	0.60
Oxygen, kg/kg Feed (wet)	0.21	0.25	0.34
Purge Nitrogen, kg/kg Feed (wet)	0.52	0.45	0.51
Product Gas Flow Rate, NM^3/hr	1001.00	813.00	934.00
Superficial Gas Velocity, m/s	0.67	0.59	0.76
Gas Yield, NM^3/lb Feed (wet)	1.231	1.177	1.276
Tars & Oils, kg/kg Feed (dry)	0.022	0.013	0.003
Dry, Inert Free Product Gas Composition, vol. %			
H_2	26.36	27.45	30.67
CO	15.17	14.82	22.40
CO_2	38.94	39.83	34.98
CH_4	18.41	17.16	11.95
C_2H_4	0.25	0.00	0.00
C_2H_6	0.67	0.07	0.00
C_3H_8	0.00	0.00	0.00
C_4H_8	0.20	0.67	0.00
Gross Heating Value (KJ/NM^3)	13551.00	13270.00	11520.00
Dry, Inert Free Gas Yield, NM^3/kg Feed(wet)	0.224	0.230	0.256
Cold Gas Thermal Efficiency, %	75.08	76.15	73.85
Carbon Conversion to Gas & Liquids, %	92.0	94.4	94.8

TABLE 2. IGT OXYGEN/STEAM GASIFICATION EARLY RUN

Run No.	A	B	C	D
Feed (Kg/hr) Oak Flakes (2/2 mm x 1.5 mm thick)				
Feed Rate	54.4	95.3	146.5	181.4
Moisture (%)	7.0	7.0	7.0	7.0
Steam Rate(Kg/hr)	167.8	183.7	195.0	267.6
Steam Temp. (°C)	330.0	527.0	683.0	604.0
Bed Temp. (°C)	615.0	649.0	737.0	584.0
Propane to Burner(Kg/hr)	14.8	16.6	41.0	24.6
Air to Burner(Kg/hr)	375.0	348.0	870.0	404.0
Gas Produced Dry(Kg/hr)	36.2	66.0	112.9	128.0
HHV (KJ/NM³)	16.7	21.2	17.4	19.4
Composition(vol.%)				
H_2	16.06	19.12	26.45	12.91
CO	46.16	27.97	42.4	37.40
CO_2	20.25	22.69	15.88	27.11
CH_4	6.31	20.19	9.30	13.93
C_2H_4	3.27	3.74	2.28	2.60
C_2H_6	1.01	1.14	1.02	1.03
C_3^+	2.91	3.15	2.05	4.43
O^2	1.08	0.39	0.06	0.01
N^2	2.97	1.62	0.57	0.58

TABLE 3. TYPICAL DATA FROM THE UNIVERSITY OF MISSOURI-ROLLA GASIFIER

OVERVIEW OF THE US/INDIA ALTERNATE ENERGY RESOURCE DEVELOPMENT PROGRAM IN BIOMASS AND COAL CONVERSION

Daniel Bienstock

Deputy Associate Director and U.S. Program Manager
Pittsburgh Energy Technology Center
U.S. Department of Energy
Pittsburgh, Pennsylvania, U.S.A.

Overview of the US/India Alternate Energy Resource Development Program In Biomass and Coal Conversion

By

Daniel Bienstock
Deputy Associate Director
and U.S. Program Manager

Pittsburgh Energy Technology Center
U.S. Department of Energy
P.O. Box 10940
Pittsburgh, PA 15236

INTRODUCTION

Good morning ladies and gentlemen. On behalf of the U.S. Agency for International Development and the Pittsburgh Energy Technology Center, U.S. Department of Energy, I would like to extend a warm welcome to each of you.

Two years ago, at the first Workshop for this program on Alternate Energy, I indicated that it was our objective to accelerate the development of coal-based and biomass-based conversion technologies suitable in the Indian context and utilizing domestic resources. Today I can say that we have, in great measure, accomplished the objective we set out to achieve. SLIDE 1

In 1983, the Indian Government identified areas in coal and biomass conversion for joint collaboration which would focus primarily on increasing the utilization of coal and biomass feedstocks with new and efficient advanced technologies. Subsequently six projects were selected in coal conversion for collaboration:

- Evaluation of the Freeboard Performance in a Fluidized-Bed Combustor SLIDE 2
- Scale-up of AFBC boilers

- Coal-Water Slurries
- Coal Preparation
- Hot Gas Cleanup
- Cold Gas Cleanup

The three projects in the area of biomass conversion are: SLIDE 3

- Development of a Village-Level Gasifier Utilizing Charred Agricultural Residue
- Utilization of Producer Gas in Small Engines (3-5 HP)
- Development and Field Implementation of Wood-Based, Gasifier/Engine Systems (5-30 Hp)

Some of these projects, especially in the areas of fluidized-bed combustion, biomass conversion, coal slurries, and coal preparation, were designed so as to provide an in-depth technical database at the completion of the program. This would permit the immediate application of the technology and possible commercialization. Workplans for the other projects were developed with a view to allow long-term research and development to be pursued. I am pleased to report that our approach has worked well.

I would like to stress that the successful achievement of the objectives of the individual projects has depended, to a large extent, on the close cooperation and interaction between the

Indian and U.S. engineers and scientists associated with the program. Their enthusiasm and just plain hard work has made it possible to realize our goals thus far, and the momentum generated will be carried through to the completion of the program.

Before I briefly discuss the status of the projects, I would like to indicate the U.S. role in the program. The U.S. responsibility in the program has been primarily to provide technical assistance, to train Indian engineers in the U.S., and to equip the laboratories associated with the program with the state-of-the- art instruments. As the agenda points out, the principal investigators will discuss the technical progress made on their projects. I will focus briefly on the technical accomplishments, the training of the Indian sceintists in the U.S., the major equipment obtained for the projects, and how the funds for the overall program have been expended so far. SLIDE 4

In the past two years, we have had <u>fifteen</u> (15) Indian engineers visit the U.S. under the program -- two more are scheduled to visit the U.S. early next year. Their visits have included site-visits to U.S. facilities activily involved in their respective areas of research to obtain training and hands-on experience in the operation and maintenance of instruments, to participate in design review meetings, and technical discussions with experts in their field of interest,

and to attend official technical conferences to update them on the current status of the technology and its future direction. In addition to the previously mentioned activities, another facet of their visits, which I firmly believe is equally important, is that it has enabled these young engineers to establish personal contacts with some of the best technical experts in the U.S. and it has opened doors for independent communications and continued cooperation.

It must be noted that the various research laboratories in the U.S., both government and private facilities, have actively cooperated with us in arranging these site-visits, and at no cost to the program. This has been made possible because the Pittsburgh Energy Technology Center and the Morgantown Energy Technology Center, of the U.S. Department of Energy, have funded many of the ongoing U.S. research and development programs at these laboratories, as well as through the interpersonal relationships of the U.S. specialists and the industrial, university, and governmental project managers involved in the U.S. programs. Therefore, I would like to acknowledge their hospitality and thank them for their efforts and the time spent.

Equipping the Indian laboratories with modern and sophisticated instruments is another important segment of this program. The equipment and instruments provided are similar to those currently being used in U.S. laboratories for similar projects. This

should facilitate rapid data acquisition and analysis. Procurement and dispatch of the instruments is a tedious process primarily because of rules and regulations which include competitive bidding procedures, and export/import restrictions. In addition, long lead time for delivery from the suppliers, and their inspection and clearance makes it a time-consuming process. Despite these difficulties, we have fulfilled the complete needs of the biomass projects and a majority of the coal projects in the short span of less than a year.

At the beginning of the program, budgets earmarked for the biomass and coal projects were $705,800 and $1,118,200 respectively. The expenditures incurred thus far under various catagories - equipment, training, workshop, U.S. specialists, support services, and DOE management - are shown in Figures 1 and 2 for the biomass and coal projects. SLIDE 5 SLIDE 6

STATUS OF THE COAL AND BIOMASS PROJECTS

o <u>Evaluation of Freeboard Performance in a Fluidized-Bed Combustor</u>

SLIDE 7

The 1m x 1m FBC test facility designed to generate 65 tons/hour of hot water is in the final stage of erection. Shakedown and trial runs are expected to begin shortly.

The combustor is being erected after elaborate reviews and evaluations of the BHEL design by engineers from the U.S. associated with Oak Ridge National Laboratory, Tennessee Vally Authority, Electric Power Research Institute, Combustion Engineering, Babcock and Wilcox, and Morgantown Energy Technology Center. This is a very well instrumented test facility equipped with the state-of-the-art instruments capable of handling high-ash Indian coals, washery rejects, and high sulfur U.S. coals. Some of the major instruments supplied from the U.S. include coal gravimetric feeders, computerized data acquisition system, and a gas analysis system.

On this project, five engineers have visited the U.S. to participate in review meetings, and to obtain actual hands-on experience in the operation and maintenance of the instruments. These engineers - C. Bhaskaran, A. V. Vasudevamurthy, S. Shanmugam, S. Sundarajan, and K. Seetharanan have visited facilities at PETC, METC, ORNL, TVA, EPRI, B & W, George Washington University, Merrick Corporation, Hewlett-Packard, Combustion Engineering, and Beckman Industrial during their visits.

o <u>Scale-Up of AFBC Boilers</u> SLIDE 8

The engineering design of the 30 MW(e) AFBC boiler including

subcomponents developed by BHEL has been reviewed and evaluated jointly by TVA and ORNL both in the U.S. and at the BHEL-Trichy facility. Comments and recommendations have been incorporated in the final design and the final report will be submitted shortly. The U.S. experience gained in operating the 20 MW(e) AFBC boiler at TVA has been used in the present design aimed at burning high-ash Indian coals and washery rejects. In this sense it represents the state-of-the-art design. However, I must point out that while U.S. experience can be applied with sufficient confidence to subsystems such as coal handling, ash handling, and gas cleanup, it is necessary that actual operation utilizing high-ash coals or washery rejects is necessary. This is because in the U.S. the technology has focused on the problem of high-sulfur present in U.S. coals and information regarding use of coals in AFBC boilers containing large quantities of ash is sparse. The high-ash present in Indian coals could have a significant effect on the performance of the boilers due to problems such as erosion of bed-tubes, control of bed-temperatures, etc.

Secondly, if the Indian utility sector is to accept the AFBC boiler as a viable commercial alternative to conventional boilers and a successful means of burning Indian coals and washery rejects, it is important that this technology be demonstrated on a sufficiently large scale of operation.

During the demonstration project, the present USAID/BHEL experimental FBC test facility would be very useful in obtaining critical data required for fine-tuning and validating the design parameters. In the U.S. similar support has been provided to TVA in the demonstration of the 20 MW(e) AFBC boiler, by the 6' x 6' AFBC boiler at Alliance, Ohio, and the strategy has worked well.

On this project, G. Viswanathan and S. Sundarajan visited the U.S. to participate in review meetings. They visited the AFBC facilities at Paducah, Kentucky and Georgetown University, TVA, ORNL, METC, and Shamokin Industrial Development Corporation. S. Sundarajan also attended the Eighth International Conference on Fluidized Bed Combustion in Houston. The conference was jointly sponsored by USDOE, EPRI, and TVA.

o <u>Coal Preparation</u> SLIDE 9

On this project, the erection of the bench-scale heavy medium cyclone system is underway. The slurry tanks, receivers, and collectors fabricated at the CFRI Workshop have been installed and erection of the equipment supplied from the U.S. - screens and cyclone - is in progress.

Besides the erection of the system, laboratory-scale investigations to characterize the feed coals to be used in the

bench-scale unit have been undertaken. Experimental data on coals from the Jharia coalfields representing moderately difficult and very difficult cleaning characteristics have been collected and analyzed for their properties. Also, experimental studies to characterize the magnetite powders to be used in the beneficiation process have been concluded.

The major equipment and instruments supplied from the U.S. include the Heyl and Patterson cyclones, the Sweco Screens, the Microtrac for particulate analysis and characterization and the Haake Viscometer for characterizing the coal/magnetite slurries.

Mr. A. K. Chakravarti, principal investigator on this project, visited the U.S. last year. His itinerary included site-visits to PETC, EPRI's coal cleaning facility at Homer City, Dravo Corporation, Roberts and Schaefer Company, and Iowa State University. During his visit he also attended the Engineering Foundation conference on "Impact of Coal Quality on Down Stream Processes."

o <u>Coal Water Slurries</u> SLIDE 10

This project is being jointly carried out by CFRI and BHEL (Trichy). At CFRI laboratory investigations have focused on the

preparation of CWS using non-coking coals. Primarily the studies conducted so far have been exploratory in nature, aimed at identification of dispersing agents and principal parameters which influence the rheology and stability of CWM fuels.

At BHEL (Trichy) where the combustion characteristics of the CWM fuels are to be investigated, a 0.5 x 0.5 m fluid-bed facility is being retrofitted with atomizers and burners. The bulk handling systems such as slurry preparation and storage tanks, and the atomizers and burners are being fabricated at the BHEL workshop.

The U.S. has supplied these facilities with the state-of-the-art instruments which include the Haake Viscometer, and Microtrac for laboratory investigations. On-line viscometers, mixers, dozing pumps and density mass flowmeters have been procured for the combustion test facility.

Under the auspices of USAID, both the principal investigators - Dr. M. Chakraborty and Mr. K. M. V. Malarkkan - participated in the conference on "New Coal Technologies" in Honolulu, Hawaii. At this conference the present status and recent developments in the CWM technology were discussed. Also, Mr. T. K. Bhowmik visited the U.S. on this program. Mr. Bhowmik and Dr. Chakraborty each spent three weeks at the PETC coal-water slurry facility performing experiments and acquainting themselves with the state-of-the-art instruments used in the U.S. Similar

instruments have been supplied to CFRI.

o <u>Hot Gas Cleanup</u> SLIDE 11

The process design of the granular bed filter and subsystems has been completed and mechanical design and detailed engineering have been recently completed. Fabrication of the system components is underway and procurement of equipment and instruments has been initiated.

From the U.S., this project will be supplied with a computerized data acquisition system, and some control and monitoring instruments such as venturi and mass flowmeters, and a cascade impactor for particulate analysis.

R. S. Rangan, the principal investigator, visited the U.S. to discuss the developments of the hot gas cleanup systems, with particular emphasis on Granular Bed Filters. He visited the facilities of PETC, METC, VEC, Accurex Corporation, Combustion Power Company, Institute of Gas Technology (IGT), Research Cottrell, Westinghouse Research and Development, Kellogg/Rust/ Westinghouse, and Denver Research Institute. Two more engineers, Mr. S. R. Rao and S. Chakravarti, are scheduled to visit early next year to obtain 3 weeks of hands-on experience and training

at the New York University.

o Cold Gas Cleanup and Separation SLIDE 12

The scope of this program entails the creation of an R & D facility to study newer concepts in gas cleaning and separation such as membrane filters, metal oxides, and activated carbons. Accordingly, a laboratory scale experimental unit to conduct exploratory research in this area is being built.

From the U.S. we are providing the project with microprocessor-based gas chromatograph, gases, flowmeters, valves, and regulators.

S. N. Reddy visited the U.S. recently to discuss the developments in this field. He visited the facilities at PETC, METC, VEC, IGT, State University of Buffalo, SRI International, Lawerence Berkeley Labs, National Bureau of Standards, and Battelle Pacific Laboratories.

o Development of a Village Level Gasifier (IIT, Chemical Engineering Department) SLIDE 13

A wood-based gasifier/engine, gas cleanup train supplied from the U.S. was installed and experiments using wood charcoal as fuel

were completed. This system is being used to provide operational experience to the team members. Additionally, two gasifiers have been designed and fabricated at IIT and laboratory testing has been completed. Modifications of the gasifiers to improve their performance and further laboratory testing is underway.

Two engineers, Dr. K. K. Baveja and Dr. T. R. Rao, were provided hands-on experience in the operation and maintenance of gasifier and engine systems at the University of California, Davis and at the University of Missouri, Rolla. Each spent four weeks at these facilities.

From the U.S., some of the major equipment/instruments includes a small gasifier and gas cleanup train engine, Hach/Carle chromatograph, HP data acquisition system, bomb calorimeter, high-temperature furnace and necessary accessories.

o <u>Utilization of Producer Gas in Small Horsepower Engines - (3 to 5 HP) (IIT, Mechanical Engineering Department)</u> SLIDE 14

On this project, tasks relating to the design, development, and laboratory testing of dual-fuel diesel engines of small horsepower have been completed. A standard retrofit procedure has been developed to burn low calorific value gas in diesel engines. A diesel engine has been hooked up with the village-level gasifier developed by the Chemical Engineering

Department.

Dr. L. M. Das and Dr. K. Pal each spent four weeks at the University of California, Davis, and the University of Missouri, Rolla as part of their training program. They were trained on the gasifier systems at these facilities, much attention was given to the operation of the gasifiers, monitoring, and data collection procedures. Operating and maintenance procedures for much of the equipment/instruments provided from the U.S. was part of the training program.

This project has received from the U.S. a gasifier, HP data acquisition system, IMEP meters, gas chromotograph, carbon monoxide safety monitors, and accessories such as pressure transducers, thermocouples and flowmeters.

o <u>Development and Field Implementation of Small Wood-Based Gasifier-Engine System (JSEI)</u> SLIDE 15

The gasifier/engine system designed and fabricated at JSEI has been extensively tested in the laboratory. Both short- and long-term laboratory tests on the small wood-based gasifier and on dual-fuel diesel engine pumps have been successfully completed. The gasifier/engine system is being currently field-tested at a farm near Vallabh Vidyanagar to obtain

field-performance and operation data.

Mr. R. N. Pandya and Dr. M. Durgaprasad were trained for four weeks in the U.S. at the facilities of the University of California, Davis and the University of Missouri, Rolla on training programs similar to those developed for the two previously mentioned biomass projects.

Equipment supplied to this project includes HP data acquisition system, gas calorimeter, cutting mill, moisture and CO monitoring meter, condensers, and accessories such as pressure, temperature, flow, and torque transducers.

CONCLUSION

Before concluding the morning session, I would like to re-emphasize that through close cooperation it is possible to transfer technology effectively and we have been able to demonstrate this quite well in several areas of coal and biomass conversion through the course of the program. However, I am certain you'll agree that there is room for futher collaboration in both these areas. We have at this workshop several representatives from the U.S. as well as the Indian private sector primarily involved in the energy business. I hope this workshop will provide a forum for technical exchange which will

enable a better understanding of the need for, and availability of, technology, products and services in specific areas of interest.

Thank you.

FIGURE 1

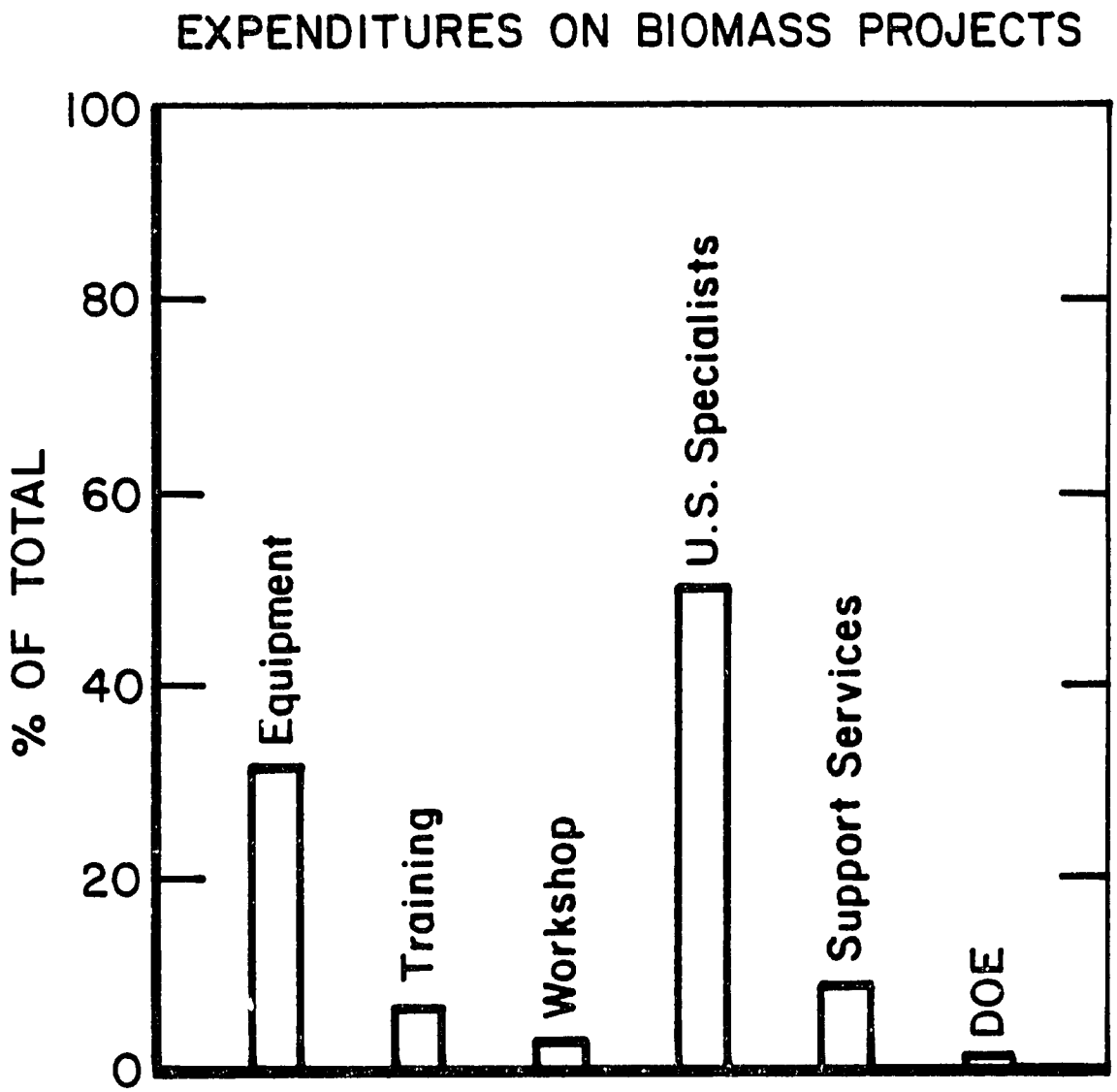

TOTAL ALLOCATED = $ 705,800
TOTAL SPENT TO DATE = $ 446,300

NO./9737-A

FIGURE 2

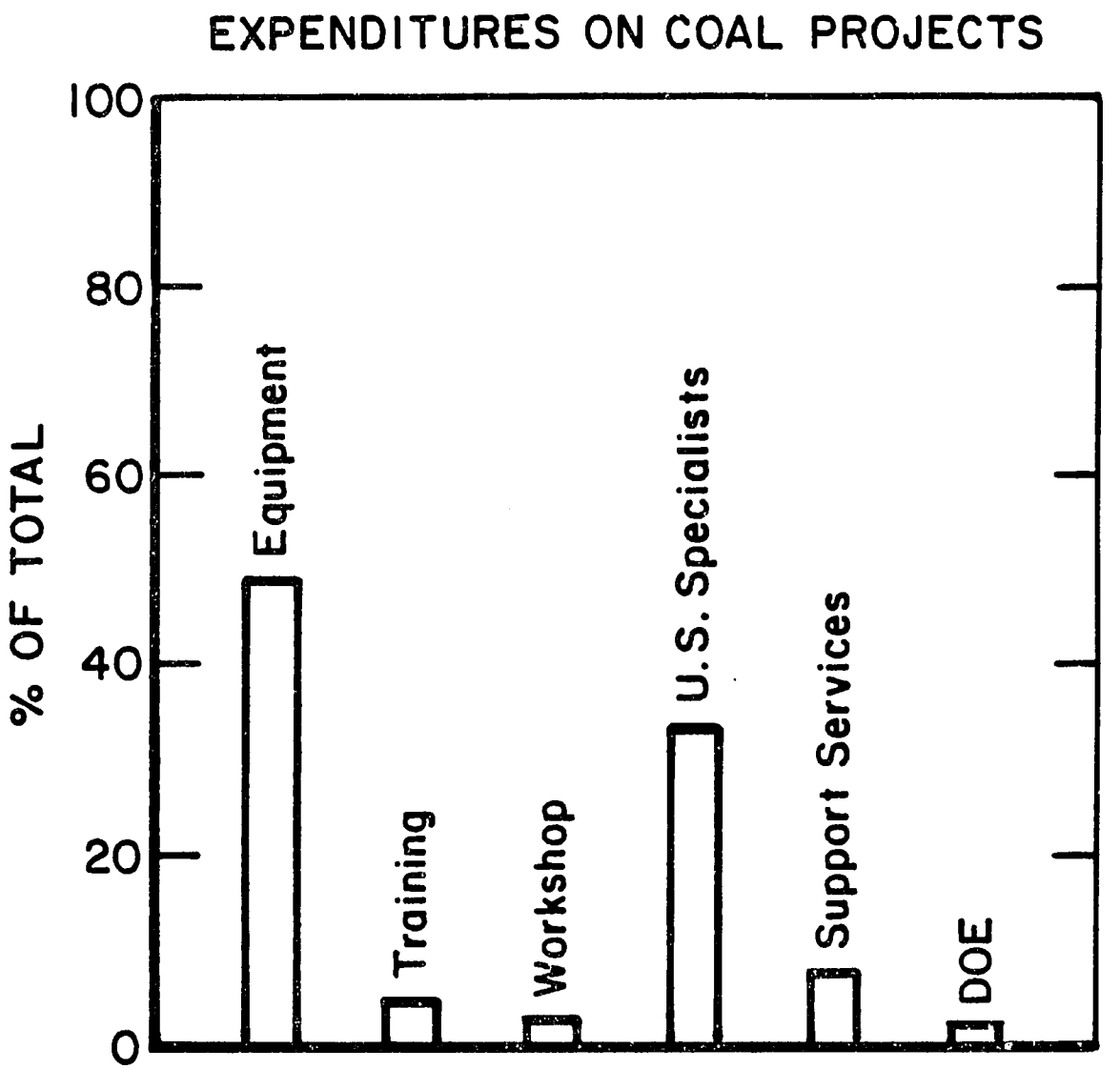

TOTAL ALLOCATED = $ 1,118,200
TOTAL SPENT TO DATE = $ 802,100

NO./9737

CONCEPT OF A SOLAR/AFBC 30 MWe POWER PLANT

Raj Gopal

Westinghouse Electric Corporation
Pittsburgh, Pennsylvania, U.S.A.

(Paper unavailable at time of publication.)

APPLICATIONS OF FBC SYSTEMS FOR RETROFITS

R. J. Gendreau

Stone & Webster Engineering Corporation
Boston, Massachusetts, U.S.A.

APPLICATIONS OF FBC SYSTEMS FOR RETROFITS

R. J. Gendreau
Stone & Webster Engineering Corporation
245 Summer Street
Boston, MA 02107

INTRODUCTION

Fluidized bed technology has been successfully applied to numerous processes in many different industries since it was first used by Fritz Winkler, in Germany in 1926, for the gasification of powdered coal. It was first used in the U.S. during World War II, in the fluid catalytic cracking process for the production of high-octane aviation fuel. Since then, fluidized bed technology has been used in the U.S. in processes for ore-roasting, calcination, waste disposal, incineration, coal gasification, and many others.

Fluidized bed technology was first applied to the combustion of coal for steam generation in Great Britain during the late 1950s to the early 1960s, so that the British could use their large low-grade coal reserves.

Concentrated work on fluidized bed combustion (FBC) began in the U.S. in the late 1960s. Initial interest in FBC arose primarily because of its ability, when using limestone as the bed material, to remove sulfur dioxide (SO_2) from flue gas and thus meet Environmental Protection Agency (EPA) emission limitations without resorting to the installation of costly flue gas desulfurization (FGD) systems. Today, many operating FBC systems have clearly demonstrated not only this capability, but also other major advantages that these systems have over conventional boiler technologies. These include the FBC system's ability to--

- Burn a wide range of fuels, including low-grade coal and waste fuels
- Produce low levels of oxides of nitrogen (NO_x)
- Produce a single, dry, solid waste material that is relatively easy to handle and is not harmful to the environment

Successful commercialization of ever larger FBC units in retrofit, repowering and grass-roots applications, together with ever diminishing utility capacity versus demand margins, has increased utility interest in FBC technology dynamically.

FBC technologies can be separated into two broad classifications: Atmospheric fluidized bed combustion (AFBC) and pressurized fluidized bed combustion (PFBC).

AFBC units are similar in many respects to pulverized coal and stoker-fired boiler technologies. They are balanced draft and incorporate many of the same design features (e.g., membrane water walls, convection, superheat, reheat and economizer surface) and auxiliary equipment (e.g., air preheaters, fans, baghouses) as are used on conventional solid-fuel-fired

boilers. Steam generated in an AFBC also is generally used in conventional steam turbine cycles. The major difference is the inclusion of a dense, "bubbling" or circulating fluidized bed along with the conventional boiler components.

PFBC systems are very different from conventional boiler technologies. They burn fuels at pressures ranging from 3.5 to 20 atmospheres. To accomplish this, the fluidized bed and associated components are enclosed within a pressure vessel that is supplied with pressurized air for combustion. The hot pressurized flue gas (1500 to 1600°F) either can be expanded through a gas turbine to generate electricity before going to a waste heat boiler to generate steam for additional electrical generation (combined cycle), or it can be cooled (800°F) before expansion. In this case, most of the electricity is generated using a conventional steam turbine cycle, and the cooled pressurized gas is expanded through a process turbine to generate power for compressing the combusion air and possibly a small amount of electricity (turbocharged cycle).

During the early stages of FBC development AFBC and PFBC technologies were following parallel development paths. It was thought by many at that time that AFBC technology would be limited to mostly industrial applications, because of the large size, mechanical complexity, and relatively poor performance of early designs when scaled up to utility size units, and that PFBC technology would be selected for utility FBC applications for the reasons highlighted below.

- PFBC improved plant performance by lowering plant heat rates, because the technology used the combustion turbine in a combined cycle configuration.

- PFBC units had more compact, higher-power density designs, which lend themselves to shop fabrication of large modules.

- PFBC units showed higher combustion efficiency and improved use of sorbents.

AFBC units, as expected, were rapidly accepted for many industrial applications. The results of these applications, along with work sponsored by the US Department of Energy, Tennessee Valley Authority, Electric Power Research Institute, Northern States Power Company and others led to significant improvements in AFBC designs, including the development of circulating fluidized bed (CFB) designs. These improvements and accumulated operating experience have provided the confidence and the data base from which to proceed confidently with utility applications of AFBC technologies. Table 1 lists utility AFBC projects currently underway or recently completed, including those being sponsored by EPRI as part of their AFBC Demonstration Program, circulating fluidized bed projects in Europe, and one recently announced in the U.S.

While AFBC technologies were progressing rapidly, PFBC development was slowed by the need to develop and demonstrate equipment and systems for--

- Hot flue gas cleanup
- High pressure fuel and sorbent feed
- Gas turbines that can resist the corrosion, erosion and fouling effects of the flue gas and entrained particulates

Developments in these areas and the advent of the less complex turbocharger PFB cycle has led to renewed interest and activity in PFBC technologies. However, PFB systems are not commercially available today and are not expected to be before the mid to late 1990s; therefore, they will not be considered further in this paper.

Applications for fluidized bed systems can be broken down into the following:

- Retrofits
- Repowering
- New plants

A retrofit consists of adding a fluidized bed onto an existing furnace and making all necessary changes and additions to the furnace and balance of plant systems and equipment. In the United States, examples of this approach include Northern States Power Company's (NSP) French Island Wood Burning AFBC Retrofit Project and NSP's 125 MWe Black Dog Unit 2 AFBC Retrofit Project.

Although the focus of this paper is the retrofit option, a similar approach is repowering. A repowering consists of building a new fluidized bed unit and auxiliary systems and equipment to provide steam to an existing turbine plant. In most cases the unit will be located in a new boiler house, although it may be possible in some cases to install the new boiler in the space previously occupied by the old boiler.

Utilities are interested in fluidized bed retrofit and repowering projects for the following reasons:

- Cost savings from burning low grade coals
- Cost savings from burning waste fuels
- Fuel independence.
- Plant life extension
- Improved plant performance and availability
- Low cost plant capacity increase
- Reduction in plant emissions (acid rain legislation, etc) without the need for FGD systems

4133-5323642-B1

- Ease of permitting

- Short schedules; ability to quickly add additional reliable capacity

AFBC RETROFITS TO EXISTING BOILER UNITS

General

The advantages of fluidized bed retrofits include:

- The advantages of fluidized bed boilers.

- Low cost. While highly site specific, the Black Dog AFBC Retrofit Project, for example, will cost approximately $450/kW

- No major increase in real estate

- Short schedules. The Black Dog schedule is 36 months overall including preliminary engineering and licensing.

- Plant life extension

- Possible ability to increase the electrical generating capacity of the unit, the Black Dog Project, for example, includes a 40-45 MWe capacity increase

SWEC recognized the many potential benefits to our clients of retrofitting existing boilers to AFBC in the early 1980s due to our extensive involvement in fluidized bed combustion in general, and the work we were doing on the first AFBC retrofit of a utility unit at Northern States Power Company's French Island Unit 2 in particular. Our belief that AFBC retrofits are a cost effective and environmentally sound approach to meeting many of our clients' needs was suggested by the work we began in early 1983 on NSP's 125 MW Black Dog AFBC Retrofit Project.

For most fluidized bed retrofit applications, SWEC recommends the bubbling AFBC design. It will generally require significantly less building, foundation, and equipment modifications then a circulating fluidized bed retrofit would require. SWEC also recommends that overbed fuel feeding be used except when coal with very high fines content is to be used.

SWEC performed a study several years ago to determine the size of the potential US domestic AFBC retrofit market. Similar studies have been performed by the AFBC system vendors, Electric Power Research Institute (EPRI), and others. It is very interesting to note that the initial screening criteria used in many of these studies is very similar, resulting in similar conclusions.

The initial screening criteria used by SWEC were:

- Unit plan area heat release rate $\leq 1.5 \times 10^6$ Btu/hr - Ft^2
- Unit size $\leq$ 300 MW

- Unit ordered after 1948
- Unit designed for coal

Since 1948 there have been 270 units that meet these criteria. These units have an average capacity of 100 MW or a total of 27,000 MW. The majority of these units are 20 to 30 years old making them prime candidates for life extension and AFBC retrofit.

The plan area heat release rate (PAHR) is defined as the amount of heat generated (Btu/hr) per square foot of boiler plan area at the fuel burner level within the combustor. The PAHR in a conventional boiler (PC, oil, gas) is proportional to the quality of the fuel with respect to slagging and fouling characteristics. Oil and gas fired boilers have much higher PAHRs than coal fired combustors.

The PAHR limit of 1.5×10^6 Btu/hr - ft^2 was selected for practical reasons rather than any limiting technological factors. Bubbling fluidized beds have a relatively low PAHR compared with PC fired boilers. The PAHR is a direct function of the fludizing velocity which for most retrofits will be around 10 ft/sec. The average PAHR is approximately 750,000 Btu/hr - ft^2. Therefore, retrofits of PC units with PAHR's of 1.5×10^6 Btu/hr - ft^2 will require up to twice the plan area of the existing furnace, which we feel in general is the practical limit, or a derating which we feel in most cases will be unacceptable. Although fluidized beds can be stacked in a vertical arrangement to reduce plan area requirements, this approach has potentially significant design difficulties and it is not recommended.

Fortunately most of the boilers built between 1948 and 1965 have PAHRs that are less than 1.5×10^6 Btu/hr - ft^2. The PAHR for the original Black Dog boiler, for example, was approximately 1.0×10^6 Btu/hr - ft^2.

The size limit of $\leq$ 300 MW is based again more on reasons of practicality than on any limiting technological factors. We feel that bubbling AFBC technology using overbed fuel feeding and a single level design, is the preferred approach for most retrofits.

The increased plan area required by the AFBC retrofit along with overbed feeding system limitations make 300 MW a practical screening limit. Also, we feel that the present state-of-the-art for AFBC systems is around 300 MW.

Again it is fortunate that most of the boilers built between 1948 and 1965 are 300 MW or less in size.

The year 1948 was selected because it marks the beginning of significant power generation activity following World War II. These units also were designed for more modern steam cycles with much better heat rates than earlier designs making them better life extension candidates.

Units designed originally for coal were selected because these units have larger furnaces and gas passes with much lower flue gas velocities compared with units designed for oil or gas firing to accommodate the fouling and slagging characteristics of the coal and the ash loading in the flue gas. These design values are usually acceptable for the AFBC retrofit without any derating. These units also generally have many of the auxiliary systems

required to handle, store, and prepare coal, and to collect, store, and dispose of ash. Much of this equipment will be required for the AFBC retrofit. Even when this equipment is no longer serviceable, or it has been removed or never installed at all, at least space is generally available for these and other systems that will be required when the unit is retrofitted. Units designed originally for oil and/or gas firing have smaller furnaces (much higher PAHRs) with smaller gas passes and much higher flue gas velocities. A 40 to 50 percent derating will usually be required due to these factors, if retrofit with a bubbling AFBC. There is some possibility to retrofit these units with a circulating FBC due to its more compatible PAHR (approximately 1.5 X 10^6 Btu/hr-ft^2) and its higher operating velocities. These retrofits tend to be more complex and space intensive however, and the economics are not well established. As far as SWEC has been able to determine, no commitments have been made for a CFBC retrofit of an existing boiler. Oil and gas fired units should definitely be considered for repowering with CFB technology. Even more critical in many cases is the lack of space around and under the furnaces, in the boiler house, and on the plant site to accommodate all the new systems and equipment required for firing coal in general and the AFBC retrofit in particular.

AFBC retrofit applications are highly site specific. These criteria are only a very general basis for screening potential retrofit candidates. Units that do not satisfy one or more of these criteria may still turn out to be good AFBC retrofit applications.

Once a potential candidate for an AFBC retrofit is identified, a site specific screening study should be performed. This study should address the following:

- The condition of the existing furnace and convective section pressure parts, insulation and lagging, casing etc.

  While the condition of the existing boiler is important, several facts should be kept in mind. Fifty percent of the heat released in the boiler will be absorbed by the new heat transfer surface located in the fluidized bed allowing great flexibility to remove, modify, or replace existing surface that may be in poor condition. Also the cost to replace the entire existing boiler (i.e, pressure parts, casing, insulating and lagging, etc), with all new components may add only 10 to 20 percent onto the AFBC suppliers' contract price if the drum and support steel can be saved.

- Available space around the existing furnace for the AFBC retrofit. As discussed earlier, most AFBC retrofits will require an increase in furnace plan area. Also space will be needed for the new coal and limestone feed systems, air plenum and ash removal system under the bed, recycle system and other components associated with the new AFBC retrofit.

  Space considerations are more critical when an increase in unit capacity is planned as part of the retrofit (e.g., Black Dog increased capacity generation 30 percent).

- The forced draft fans will have to be replaced or booster fans added in most cases (cyclone furnaces may be an exception) because an AFBC requires high pressure air (60 to 70 in w.c.). New ID fans or changes to the existing fans (new wheels, motor, speed control, etc.) may also be required due to the added pressure drops associated with the recycle multiclone and baghouse (if required) and increase in flue gas flow if the unit capacity is increased.

- Existing, regenerative type, air preheaters will need to be replaced. The high air pressures required by the fluidized bed will cause excessive leakage across the existing regenerative air heater seals. If the unit has a tubular air preheater in good condition, it may be adequate. Both Black Dog and TVA will be testing new Lungstrom air preheaters with automatic leakage control systems which are designed to maintain low leakage (9.5 to 10.0 percent) with the high differential pressures produced with the fluidized bed.

- If the unit has an ESP for particulate control it may have to be modified or replaced with a baghouse. ESP's designed for medium to high sulfur coals will generally be too small to handle the high resistivity ash produced by most AFBC units. An evaluation of the condition, size (specific collection area), controls, and latest performance data will be necessary. Flue gas conditioning or other method for accommodating the expected ash characteristics should be considered.

- The existing boiler support steel and foundation design needs to be checked. The retrofitted boiler will be heavier than the existing boiler in most cases. Also, weight distribution may change due to the revision, replacement, or addition of equipment. The fluidized bed will generally be bottom supported, expanding upward. The remaining portions of the boiler, in most cases will be supported as originally designed. If it was originally top supported and designed to expand downward, a circumferential seal around the furnace will generally be included to accommodate the differential expansion where the existing furnace and the new AFBC system are joined.

- The plant electrical system may need to be revised due to the increased FD and ID fan power requirements and the addition of new loads for the coal feeders, limestone handling and feed system, bed material cooling and disposal system, char recycle system, and char disposal system. These new requirements are offset somewhat by the elimination of the coal pulverizers, exhausters, etc.

The following is a typical list of systems and equipment required for an AFBC retrofit project:

<u>Fluidized Bed Steam Generator</u>

- Watercooled air distributors with nozzles and plenum enclosures with headers

- Fluidized bed waterwall enclosures with headers
- In-bed watercooled coils and headers
- In-bed superheater coils and headers
- Convection superheater coils and headers
- Bare tube in-line economizer coils and headers
- Necessary additional superheater headers for revised superheater circuity
- Superheater transfer piping internal to the boiler
- Superheater spray control headers
- Boiler circulation pumps
- Necessary downcomer piping, feeders and risers (no welding to the steam drum is required)
- Access doors and observation ports
- Refactory, insulation, lagging and casing
- Lower furnace wall headers
- Nonmechnical seal between new fluidized beds and existing boiler furnace

Coal Feed System

- Spreader feeders

Limestone Feed System

- Limestone feeders

Combustion Air and Fuel Gas System

- Air preheaters
- Air ducts from air heater to fluidized beds
- Gas flues from economizer outlet to air heater and air heater outlet to precipitator or baghouse inlet
- Steam coil air heaters
- Air flow control and shutoff dampers
- Expansion joints, hangers and supports

- Insulation and lagging for air ducts, air heaters and gas flues supplied
- Air flow elements and instrument connections

Spent Bed System

- Spent bed material removal system
- Spent bed material coolers

Flyash Reinjection System

- Mechanical dust collector with hoppers
- Transport air blowers (including drivers)
- Lock hoppers
- Interconnection piping, fittings, and support
- Char coolers

Start-up System

- In-duct gas fired burner
- Freeboard gas fired burner
- Valves, piping and supports
- Burner management and fuel safety systems
- Local control panels

Instrumentation

- Local instrumentation including process control drives and positioners

Structural Steel, Platforms, Stairs and Railings

- Structural support steel including baseplates, buckstays, support saddles, hangers, platforms, stairs, and railings for access to new or modified equipment.

Piping Systems

- Drain piping
- Seal, cooling, and purge air

Valves

- Attemperator spray control, isolation, bypass, and check valves
- Drum and superheater safety valves
- Superheater power relief valve
- Boiler drain and vent valves

Combustion Air Handling System

- FD fans and ducts

Flue Gas Handling

- Modified or new electrostatic precipitator systems or baghouse
- Induced Draft (ID) fans

Fuel, Sorbent, and Ash Handling Systems

- Coal handing system and equipment
- Pneumatic sorbent handling system and equipment
- Bed material, mechanical collector ash, and fly ash handling system
- Pressurized bed material handling system
- Bed material storage tank equipment
- Vacuum fly ash system
- Fly ash storage silo
- System controls

Also generally required, especially when capacity increases are included with the life extension and AFBC retrofit, will be modification, upgrade or replacement of some of the following BOP equipment and systems:

- Turbine/Generator
- Instrumentation and Controls
- Condenser
- Condenser Air Removal System
- Condensate Pumps and Related Piping
- Boiler Feedwater Pumps

- Deaerator
- Feedwater Heaters
- Heater Drain Pump
- Circulating Water Pumps
- Electrical Upgrades
- Structural Upgrades
- Plant Control System

Northern States Power's French Island Wood Burning AFBC Retrofit

Background

French Island Unit No. 2 was initially built in 1948 as a 12.5 MW coal-fired electric generating plant. Both Unit No. 2 and its predecessor, Unit No. 1, were converted to oil during the early 1970s due to their inability to comply with air quality regulations.

Northern States Power (NSP), which serves over one million customers in Minnesota, Wisconsin, and the Dakotas, had little previous experience with the operating characteristics of wood fuel for utility boilers. Tests were therefore conducted at two NSP plants, including French Island, to explore wood handling, combustion performance, boiler capacity, and other special requirements of waste fuels. It was determined that, from the boilers tested, there was sufficient grate area and furnace volume to burn wood. It was also learned that Unit No. 2 had the potential for being retrofitted to burn waste wood using an atmospheric fluidized-bed process.

The French Island plant is located on the southern tip of French Island in LaCrosse, Wisconsin, about 150 miles south of Minneapolis on the Mississippi River. A significant factor in the decision to proceed with the fluidized-bed conversion was the number of lumber mills located near the plant within the hardwood forests of west central Wisconsin. An adequate bark, wood, and sawdust fuel supply was available within a reasonable distance from the plant.

Fluid Bed Boiler Conversion

Although fluidized bed combustion is more commonly associated with coal firing, in combination with limestone for sulfur capture, fluid-bed systems have been used in the wood products industry for several years for the incineration of wastes and the generation of process heat for steam generation and wood drying.

This industrial experience was a key factor in NSP's decision to proceed with the fluid-bed boiler conversion at French Island.

Fluidized-bed combustion provides complete burning of the wood fuel because abrasion of bed solids on the burning wood-char continuously creates fresh

combustion surfaces. The bed solids also provide a large heat reservoir which maintains combustion temperatures at an adequate, but relatively low, level compared to other combustion processes, even when fuel quality changes. As a result, efficient fuel combustion is accomplished at relatively low NO_x emission levels and does not require the fuel to be uniform in size and moisture content.

Main Fuel Requirement

Wood fuel is fired at the normal rate of about 19 tons per hour (tph) on "performance" wood, or about 24 tph on the "design-grade" wood (Table 1). A peak firing rate of approximately 20 percent above the normal rate, or a maximum of 29 tph on "design-grade" wood, is possible for short periods of operation. Assuming a 33 percent capacity factor for the unit, this results in an annual consumption of from 55,000 to 66,000 tons per year of "performance" wood or from 70,000 to 84,000 tons per year of "design-grade" wood.

Table 1 lists the typical characteristics of the waste wood which is now being burned.

Economic Justification

Although research and development-oriented, the French Island project was justified strictly by economics and was financed entirely with private funds. Its $6.5 million conversion cost is expected to be recouped in only 10 to 12 years, based on estimated fuel savings.

Boiler

The shallow bed or FLUID FLAME fluid-bed combustion system, provided by Energy Products of Idaho, Inc. (EPI), consists of a rectangular containment vessel attached to the bottom of the existing boiler furnace (Figure 1).

TABLE 1

WASTE WOOD FUEL ANALYSES

Ultimate Analysis

% by Weight (As Fired)	"Performance" Wood	"Design-Grade" Wood	Wood Range
Ash	3.60	3.00	0.5-6.0
Sulfur	0.11	0.09	0.7-0.13
Hydrogen	3.20	2.66	2.2-3.9
Carbon	30.57	25.49	21.0-37.0
Moisture	40.00	50.00	30-60
Nitrogen	0.06	0.05	0.04-0.1
Oxygen	22.46	18.71	15.4-27.0
TOTALS	100.00	100.00	
Higher Heating Value (Btu/lb)	5206	4339	

4133-5323642-B1

This vessel contains the above-bed fuel injection system, the over-fire combustion/under-bed fluidizing air system, the bed material feed and tramp drawdown systems, the in-bed cooling water system, and the fluid-bed preheat burner system.

To achieve the required system output and design parameters for the conversion, some modifications to the fluid-bed system were provided by the manufacturer. Major differences in design and operational parameters from the normal FLUID FLAME unit supplied by EPI are shown in Table 2.

Since the fluid-bed combustion chamber is operated in a low excess air-fuel efficient mode, a fluid-bed cooling system was needed, consisting of in-bed cooling surface supplied with boiler circulating water from the boiler mud drum. This surface supplements the incoming air to control in-bed temperatures to levels consistent with good operating practices. This cooling surface is located so that it is immersed in the bed when fluidized and clear of the bed when slumped. The heat dissipated from the bed to the boiler circulating water through the in-bed cooling surface is pumped back into the boiler at the main steam drum. The in-bed cooling surface thus acts as additional boiler water evaporation surface.

The in-bed tubes are of a hairpin design and have a surface area of 630 sq ft. The in-bed cooling surface functions essentially as a forced-circulation boiler with a design flowrate leaving the bed of 10 parts condensate to one part saturated steam. The in-bed boiling surface combined with other changes from the manufacturer's usual design and operational parameters allows an increase in the fluid-bed power density of from 370,000 to 760,000 Btu/hr-ft^2 for wood firing.

Normal operation of the fluid-bed results in bed temperatures of from 1200 to 1800°F, and a freeboard gas temperature of approximately 2000°F at the full-load condition.

Preheated under-bed or fluidizing air at 375°F is forced through distribution manifolds and bubble caps in controlled amounts so that bed media particles are suspended in the air stream.

The bed media consists of a fired clay inert sand with a density of approximately 80 lb/ft^3, and a mean particle size of 14 mesh. Once the bed has been properly preheated, waste wood is injected onto the bed from the three pneumatic spreaders located slightly above the bed in the furnace front wall. With proper combustion established, the preheat burner bypass system is secured and the wood-firing rate increased, as desired, by the operator, and as permitted by the turbine and boiler operating requirements.

Many waste fuels contain large amounts of "tramp" material ranging from road rocks to sand. If allowed to build up, this material will eventually contaminate the bed to a point where proper fluidization is not possible. The fluid-bed system thus has a bed drawdown and cleaning system to remove the "tramp" material and control the bed level.

TABLE 2

FLUID BED BOILER DESIGN AND OPERATION

FOR

WASTE WOOD FIRING

	Normal Design	French Island Design
Power Density (Btu/hr-Ft^2)	370,000	760,000
Furnace Excess Combustion Air (%)	100	40
In-bed Heat Transfer Coefficient -U_o (Btu/hr-Ft^2-°F)	-----	50
Bed Temperature (°F) to	1,200 to 1,800	1,200 to 1,800
Furnace Temperature (°F)	2,000	2,100
Superficial Bed Velocity (ft/sec)*	12	13

* Superficial Bed Velocity is the upward velocity of the total products of combustion at the above-bed or freeboard area temperature and effective flow area.

4133-5323642-B1

Due to the unique design of the below- or under-bed drawdown hopper system, the bed media is relatively free of unburned carbon and fairly cool by the time it is removed from the unit. This bed drawdown material is processed to remove and dispose of both "tramp" and oversized material before the acceptably-sized bed material is reinjected into the bed.

Fuel is metered to the boiler from one of two live-bottom metering or surge bins. The combined surge capacity of the metering bins is approximately 10 minutes at the design rating of the unit.

Proper combustion control of the fluid-bed process is accomplished by regulating and proportioning the fuel and combustion air to both the in-bed and the freeboard regions of the fluid-bed as both boiler load and fuel characteristics change.

Boiler output is controlled by a number of variables. Bed temperature and bed expansion are the two primary variables used to control steam production. Overfire and fluidizing air are controlled and proportioned to provide the optimum bed temperature at a given operating point for a given fuel. The remaining air required for combustion is introduced to the furnace through overfire air ports. Main steam pressure is the primary variable controlling the fuel-feed rate. Air flow leads fuel flow on load increases, lags behind fuel flow on load decreases, and provides the short-term response to a rapid unit load increase. The fuel-feed rate control also has high and low limits on furnace and bed temperatures, respectively. The minimum turndown for the fluid-bed unit is approximately 2:1.

To assist the operator in optimizing the combustion process performance, flue gas monitors for opacity, O_2, NO_x and CO were installed in the unit stack. By proper utilization of data supplied from these monitoring devices, along with the in-bed and freeboard gas temperature reading thermocouples, the operator can adjust the fluid-bed boiler to obtain efficient operation and acceptable flue gas emissions.

When securing the boiler from operation, the fuel-feed is shut off, quickly reducing the fluid-bed combustion rate to zero. The fluidizing and overfire air fan is then secured and the bed slumped in the hot mode for quick restart unless maintenance is planned.

The remainder of the boiler and economizer as originally furnished for coal firing remain essentially the same. Four superheater tube bundles were added to the unit, after initial operating tests were completed, to optimize the superheater performance for operation with the new fuel and combustion system.

The flue gases leaving the boiler are routed through a particle drop-out chamber formed by the removal of the internals from an existing multicone dust collector. This particle drop-out chamber was designed to collect only the larger bed material as well as any glowing cinders which might be carried over from the furnace. The flue gases then are passed through a tubular-type air heater to provide additional fuel efficiency and air preheat as an aid in fluid-bed combustion.

Environmental Considerations

Emission rates at or below the maximum rate capacity of the boiler have been compliance tested by Interpoll, Inc. of Minneapolis, Minnesota, and witnessed by the Wisconsin Department of Natural Resources. Emission levels on wood fuel-firing were determined by test to be as follows:

- Particulate Matter - Particulate emissions from the boiler are controlled through the addition of a high-efficiency gravel-bed filter system to approximately 0.09 lb/10^6 Btu, with a stack opacity of 10 percent or less.

- Sulfur Oxides - Sulfur oxides are in the range of 0.01 to 0.1 lb/10^6 Btu in actual operation due to the inherently low sulfur content of wood and bark wastes.

- Nitrogen Oxides - NO_x emission levels are in the 0.25 to 0.4 lb/10^6 Btu range during normal operation due to the combustion characteristics of the new fluid bed system and the low nitrogen content in the fuel.

- Carbon Monoxide - The unit is designed to operate normally at slightly above the smoke and/or carbon monoxide threshold of approximately 50 ppm CO for optimum performance of the unit, from both a combustion and emissions standpoint. Carbon monoxide readings have been taken to date by Orsat and are indicated to be as predicted.

Plant Operation

The retrofitted unit went into service in December 1981 and is now operating in an efficient 5-day per week cycling operation.

Northern States Power's Black Dog Unit 2 AFBC Retrofit Project

Rationale for Project

Like other utilities, NSP has suffered from lost generation capacity as a result of environmental regulations requiring reduced stack emissions from coal-fired power plants, especially those located in or near densely populated areas.

This factor, plus the spiraling cost of coal mining and transportation costs, has forced many utilities to consider the use of lower sulfur western coals that have less desirable performance characteristics but are less costly to use, based on a total evaluation.

As a direct result of the success of NSP's French Island wood-fired AFBC boiler retrofit project and the increasing public concern for acid rain, NSP decided in early 1982 to investigate the possibility of converting one of its older pulverized coal-fired units to coal-fired AFBC operation.

The result of this investigation was the selection of Unit 2 at the Black Dog plant as the most likely AFBC retrofit candidate.

NSP anticipates that AFBC conversion and upgrade of Unit 2 at Black Dog will allow NSP to achieve a higher power plant reliability and a 25-year life extension at a lower cost per kW generated. NSP also anticipates that sulfur dioxide (SO_2) emissions will be reduced by up to 70 to 80 percent and nitrous oxide (NO_x) emissions by as much as 50 percent of current values. Particulate emissions will also be reduced to a level approaching New Source Performance Standards (NSPS) for coal-fired utility power plants or 0.4 lb/10^6 Btu/hr.

NSP is currently planning to test alternate fuels such as RDF, petroleum coke, and higher sulfur bituminous coals from the eastern United States in the converted Black Dog unit in an attempt to develop even more economical and cleaner burning fuel sources for use in this converted unit.

A major incentive for NSP proceeding with this project at this time is to demonstrate to both itself and the electric utility industry in general the technical feasibility and cost-effectiveness of converting existing pulverized coal-fired units to AFBC operation using western coals.

Original Black Dog Generating Facility

The Black Dog Generating Plant is located approximately 15 miles south of downtown Minneapolis. The existing plant contains four pulverized coal-fired units. Units 1 through 4 are rated at 80 MW, 100 MW, 120 MW, and 185 MW, respectively. Units 1 and 2 are non-reheat units while Units 3 and 4 are single reheat units.

All the units at the Black Dog plant were originally designed to burn Illinois bituminous coals; however, they have been burning a blend of Illinois bituminous coal and low sulfur western coals in recent years in an effort to reduce the station's emissions of sulfur oxides.

Unit 2, which is the unit that will be retrofitted to fluidized bed combustion, was constructed in 1954 and has been derated from its original 100 MW rating to 85 MW as a result of firing this low sulfur coal blend.

Figure 2 shows the original Black Dog Unit 2 arrangement. The original plant contained a single electrostatic precipitator and as a result of switching to the low sulfur western fuel blend, a second precipitator was installed to control particulate emissions to required levels.

Figure 3 shows a more detailed view of the original steam generator which was originally built by Foster Wheeler and designed with a maximum working pressure of 1770 psig at 860,000 lb per hour, with a final steam temperature of 1000°F. Table 3 shows some additional information concerning the original unit design conditions.

The original unit was designed with a fixed, external pressure casing with top supported pressure parts which expanded down inside the insulated casing and was designed to fire pulverized coal, oil, or natural gas with burners located in the front wall. The following are several pertinent characteristics of the original steam generator design:

- The furnace front wall consisted of radiant superheater surface with steam flow both up and down the furnace wall.

- The unit had a full water-cooled division wall.

- The unit was fired using ball mill pulverizers with an exhauster fan arrangement.

- The intertube pass gas velocity at the top of the convection heating surface down pass was approximately 70 ft per second.

- Most of the horizontal convection pass surface consisted of gilded ring extended boiler and economizer surface.

- The two regenerative air preheaters were located directly below the economizer and were subject to plugging from broken refractory and ash.

Several options are currently being considered regarding upgrading the turbine generator to improve its performance with the increased steam flow that will result from the steam generator retrofit.

Retrofit Goals

The Black Dog Unit 2 retrofit project was approved by NSP following the completion of several engineering studies which showed favorable technical and economic incentives. Air Quality Control permits were easily obtained for the retrofit since this project will result in a reduction in emissions from the Black Dog site and the AFBC retrofit will be carried out within the existing plant structure. Upon completion of construction, the retrofit project will result in an increase in steam capacity which will add 40 MWe to the present unit rating and result in a maximum generating capacity of 125 MWe. The AFBC retrofit design is being based on New Source Performance Standards for flue gas emissions of SO_2 and NO_x.

Pulverized coal steam generators are typically sensitive to variations in fuel characteristics. One of the benefits of fluidized bed combustion is the additional fuel flexibility that the process can tolerate. As a result of this benefit, the Black Dog Unit 2 retrofit is being designed to fire Sarpy Creek sub-bituminous coal as the design fuel with provisions to fire high sulfur bituminous coal, lignite, delayed petroleum coke, and a mixture of coal and RDF as alternate fuels. This kind of fuel flexibility should permit NSP's fuel procurement personnel to take advantage of the lower prices that are available for some fuels.

To minimize stresses on the 32-year old turbine/generator unit, the retrofit steam generator will be designed for variable pressure operation with current plans for turbine upgrade work expected to provide for an improved heat rate. These unit re-design activities are part of the overall life

TABLE 3

ORIGINAL FOSTER WHEELER UNIT 2 PERFORMANCE SUMMARY
FULTON ILLINOIS COAL

	Units	Maximum Normal Load*
Design pressure	psig	1,770
Boiler drum pressure	psig	1,664
Superheater outlet pressure	psig	1,575
Superheater outlet temperature	°F	1,000
Turbine throttle steam flow	M #/hr	820
Economizer inlet temperature	°F	445
Regenerative APH		
Air inlet temperature	°F	80
FG outlet temperature (with Lkg)	°F	290
Excess air at economizer outlet	%	25
boiler efficiency	%	86.75

Unit was also designed for a 4-hr peak load.

4133-5323642-B1

extension program being carried out in parallel with the steam generator retrofit which is expected to give the existing plant an additional 25-year operating life. Also, as additional nuclear units are put on line, the coal-fired units will see higher percentages of cycling operation. Therefore, the retrofit design will take into consideration operation in a cycling mode that could result in two shifts per day operation, with weekend shutdowns.

Demolition Requirements

Demolition of equipment to be removed was carried out by NSP and commenced in September 1984 (see Figure 4). The original cold casing design was internally insulated with asbestos, and, during the demolition, NSP force account employees followed state, federal, and NSP's own self-enforced, rigorous asbestos removal procedures. Asbestos removal from the boiler and the original electrostatic precipitator work was completed in February 1985. The following areas of the facility were affected by the demolition effort:

- The entire steam generator lower furnace was removed from an elevation slightly above the upper row of burners and included the ash hopper.
- The full water-cooled division wall was removed.
- The ball mill pulverizers, exhausters, and pulverized coal burners were removed.
- The entire lower convection pass section was removed from an elevation just below the finishing superheater and included the boiler evaporative section, economizer, and regenerative air preheaters.

AFBC Steam Generator and Auxiliaries

Due to certain design limits of the existing boiler and related auxiliaries, and due to NSP's desire to increase the rating from 100 MW to 125 MW gross generation (see Table 4 for new heat and material balances), certain constraints and requirements exist with regard to the Unit 2 redesign for the AFBC conversion (see Figure 5). These constraints/requirements are as follows:

1. Bed superficial velocity is specified at 10 fps maximum to minimize the carryover of unburned coal and unreacted limestone, and thus reduce the recycle rate to levels approaching those used on stoker-fired units.

   This requirement is necessary due to a design upper limit on convection pass gas velocities of approximately 50 fps at the maximum continuous rating of the unit. The particulate loading to the existing particulate removal system must also be maintained at suitable levels through proper recycle system and multiclone design so that the outlet loading from the unit can be controlled to near NSPS without having to replace the precipitators. Some upgrading of the particulate removal system is also planned.

2. The unit will be designed to burn Sarpy Creek coal (see Tables 5 and 6 as well as other sub-bituminous coals and lignites with a maximum SO_2 removal requirement of 80 percent while using available alkali in the fuel ash to reduce limestone consumption (see Table 6).

   Alternate fuels such as RDF, petroleum coke, and higher sulfur content eastern coals will be test fired in the unit to determine their potential use.

3. The unit will be designed with an overbed coal and limestone feed system, which is the project's preference for large AFBC units. The unit will also be designed with overfire air ports located above the coal feeder inlets to the furnace.

4. The two existing air preheaters will be replaced with a single low leakage type regenerative air preheater to handle the higher pressure drops, flows, and particulate loading.

5. A new multiclone dust collector unit will be added between the boiler outlet and the air preheater inlet to help compensate for the higher particulate loading from the boiler and to provide high carbon content fly ash material to the overbed recycle system, when required.

6. New FD and ID fans will be installed to provide the higher static head requirements of the new AFBC system.

The selected AFBC boiler retrofit system consists of a one level fluid bed with a 10 fps superficial bed velocity. The expansion of the lower furnace plan area required to accommodate this fluid bed superficial velocity will be to the north and south sides of the existing furnace. This approach requires minimum modifications to the existing boiler support steel and reduces the complexity and cost for the coal and limestone feed systems. The new AFBC furnace system will be bottom supported. No new piling or substructures are planned for the retrofit.

This AFBC retrofit approach requires a circumferential seal around the furnace to accommodate the differential expansion where the existing furnace and the new AFBC system are joined. This circumferential seal is a combination mechanical and slip-seal joint with the furnace pressure balanced at the seal at atmospheric pressure to minimize the potential leakage rate.

TABLE 4

STEAM GENERATOR SYSTEM HEAT AND MATERIAL BALANCE

	Units	Sarpy Creek Perf Coal
Turbine throttle pressure	psig	1,450
Main steam temperature	°F	1,000
Net generation	MW	115
Gross generation	MW	125
Turbine throttle steam flow	MW/hr	1,039
Economizer inlet temperature	°F	469
Net plant heat rate	Btu/kWh	10,930
Excess air at economizer outlet	%	18.5
Air preheater air temperature entering (FD fan/air preheater)	°F	80/110
Air pressure leakage	%	10
Air preheater flue gas temperature in	°F	690
Air preheater flue gas temperature out	°F	250
Boiler efficiency	%	87
Carbon utilization	%	99
CO in flue gas	ppm	210
NOx in flue gas	ppm	245
SO_2 limit (NSPS*)	#/MBtu	0.6
SO_2 removal required	%	72
Ca/S mole ratio (limestone)	-	1.7
Gross heat input from fuel	Btu/hr x 10^6	1,257
Flue gas weight at air preheater inlet	MW/hr	1,260
Combustion air weight to AFBC	MW/hr	1,129
Fuel burned	MW/hr	147.9
Limestone required	#/hr	7,375
Total waste solids	#/hr	23,339
Total solids to bed drain	#/hr	4,606
Total solids entering cycle	#/hr	18,783
FG weight to ESP including 10% air leakage	MW/hr	1,405
Flue gas (at 800 ft)	ACFM	442,953

NSPS = New Source Performance Standards

4133-5323642-B1

TABLE 5

PERFORMANCE AND DESIGN FUELS

Coal Analysis (% by Weight)	Sarpy Creek Perf Coal	Sarpy Creek Dsgn Coal
Sulfur	0.90	1.20
Moisture	23.90	25.00
Carbon	49.70	48.55
Oxygen	10.77	10.45
Hydrogen	3.20	3.07
Ash	10.80	11.00
Nitrogen	0.70	0.70
Chlorine	0.03	0.03
Total	100.00	100.00

4133-5323642-B1

TABLE 6

PERFORMANCE AND DESIGN FUELS ASH ANALYSIS

	Sarpy Creek Perf Coal	Sarpy Creek Dsgn Coal
Hardgrove Grind Index	62	50
Ash Analysis (% by Weight)		
SiO_2	35.2	
Al_2O_3	17.2	
TiO_2	0.7	
Fe_2O_3	6.9	
CaO	17.4	
MgO	4.3	
Na_2O	1.5 (medium fouling)	4.0 (high fouling)
K_2O	0.4	
P_2O_5	0.5	
SO_3	15.3	
Trace	0.6	
Total	100.00	
Ash Fusion Temp - °F (Reducing/Oxidizing)		
ID	2165/2250 (high slagging)	2100/2150 (high/severe slagging)
H=W	2170/2260 (slagging)	2120/2180 (slagging)
H=W/2	2180/2270	
FL	2190/2285	

4133-5323642-B1

All of the new AFBC system, as well as the existing water-cooled furnace pressure parts, will be designed for forced circulation.

The AFBC conversion approach at Black Dog will provide a significant combustion residence time in the furnace and should result in a relatively low carbon carryover and low recycle rate requirement for achieving the predicted limestone use and combustion efficiency. The conversion approach being used also results in the limestone and coal feeders being located at the front of the new AFBC unit with the overfire air and recycle injection ports being located in a manner similar to that used on a conventional stoker-fired unit.

Input from three demonstration-prototype and pilot plant programs has already been incorporated into the design for the Black Dog unit wherever possible. Subsequent information, as it becomes available as appropriate, will be fairly easily incorporated into the unit design through design flexibility and contingency planning considerations provided in the basic design of the AFBC and related system for the retrofit.

Coal and Sorbent Handling and Storing Facilities

Coal for the AFBC retrofit unit will use the existing unloading and handling facilities. The coal will be off-loaded from barges by two cranes into hoppers at the barge unloading facility.

Fly Ash and AFBC Spent Bed Waste Handling and Disposal Facilities

The existing coal storage within the plant for Unit 2 consists of two 700-ton silos. The limestone storage within the plant for Unit 2 will consist of two new 10-ton silos fed pneumatically from a live storage silo located inside the old Unit 2 chimney.

The new Unit 2 ash disposal systems will include the AFBC spent bed and multiclone fly ash rejection systems. These systems will additionally provide for fly ash and bed material recycle back to the furnace of the AFBC unit upon demand. The ash disposal system for the new multiclone and AFBC systems will be a combination vacuum/positive pressure system. The existing ash disposal system for the Research Cottrell (RC) and Belco precipitators is a vacuum system and will not be changed.

Flue Gas Handling and Particulate Emission Control Systems

The flue gas handling and particulate emission control systems consist of the upgraded primary and secondary precipitators as well as some future provisions for a sulfur trioxide (SO_3) flue gas conditioning system. The flue gas is discharged from the Unit 2 particulate removal system through a common stack for the power plant.

The combined capacity of the precipitators, based on the Sarpy Creek performance coal, is approximately 450,000 ACFM, with a required collection efficiency of 99.79 percent.

The provisions for injecting the SO_3 into the flue gas stream will be located at points before each of the primary and secondary precipitators.

The SO_3 flue gas conditioning system, if installed at a later date, will be used to control the electrical resistivity of the fly ash. By providing a contingency plan to enhance the fly ash collection characteristics in this manner, a considerable cost savings is realized in minimizing major "up front" precipitator rework.

The two existing 50-percent capacity ID fans will be replaced and re-rated at 270,000 ACFM each at 28 inches WG with 2500-hp motors and will remain as presently located between the primary and secondary precipitators.

Other Modifications

The primary precipitator and its connecting flues, located upstream of the ID fans, will be reinforced as required to withstand the new ID fan draft requirements. The existing boiler casing will be analyzed and reinforced by FWEC as required for the new boiler operating conditions.

Some cable tray and conduit will be disturbed by the demolition and retrofit work involved and will have to be relocated. A concerted effort will be made to preserve as much cable as possible for reuse.

The 2300-volt and 480-volt switchgear presently used for the pulverized coal systems will be used for new AFBC loads, where feasible.

To minimize cost and conserve space, previously abandoned chimneys from Units 1, 2, and 3 will be used for limestone and ash storage.

Power Plant Instrumentation and Controls

The data acquisition and automatic control systems will be directly comparable in technological development, reliability, and performance with those provided on a new conventional pulverized coal-fired power plant. The data acquisition and AFBC control functions will be handled by one integrated microprocessor-based distributed control system (DCS).

The controls for existing balance of plant equipment which are operated from the main control room will be upgraded as part of the planned rework of the unit and integrated into the DCS. In addition, the DCS will provide coordinated boiler and turbine control capability from startup to full load operation. This will provide a unified operator control philosophy for all major plant controls as well as shared training, maintenance, spare parts, and operator interface stations.

Redundant CRT control consoles will provide a variety of interactive color graphics, preformatted displays, trend displays, alarms, and equipment status messages for the control and data acquisition systems. Specified critical control loops will be backed up with console mounted, hard wired, manual-automatic hard wired, manual-automatic selector stations.

Auxiliary systems that support plant operations and operate on an intermittent basis will be controlled by programmable controllers and/or

local control stations unless complexity or operator convenience dictates operation from the main control room. The programmable controllers will be linked to the data acquisition system to transmit common alarm signals and equipment status messages. Communication with the DCS will be via a redundant co-axial cable data highway.

The data acquisition system (DAS) will consist of a digital computer system which is linked to the DCS data highway. The computer will also perform such tasks as process modeling and optimization and will support management information systems functions.

Project Schedule

The boiler contract for retrofit of the steam generator and auxiliary systems to AFBC operation was awarded to Foster Wheeler Energy Corporation by SWEC as NSPs agent in May 1984. NSP carried out the demolition work which was initiated in September 1984. SWEC is providing procurement and detailed design services for the project. Erection of the new components for the steam generator retrofit began in April 1985, with completion of all work expected by June 1986. Following initiation of operation in July 1986, a shakedown and operation period of approximately 6 months will be carried out. This will be followed by a 3-year test and operation program during which the unit performance and operating characteristics will be monitored by EPRI, Empire State Electrical Energy Research Co., and Consolidated Edison Co.

Retrofit Economics

In addition to providing numerous benefits to NSP, one of the main reasons for carrying out the retrofit project is its very favorable economics. Table 7-8 shows a comparison between a new 125 MWe unit designed with a pulverized coal-fired steam generator and a wet scrubber for SO_2 emissions control, a 125 MWe fluidized bed boiler retrofit unit and a new 125 MWe plant designed with a fluidized bed steam generator. As can be seen from Table 7, the AFBC retrofit, which includes a 25-year life extension of the plant, is approximately 1/4th the cost of a new facility using a pulverized coal unit with a wet scrubber. The NSP Project, which is estimated to have a final capital cost of $58.4 million is expected to finish very close to the $430 to $450 per kilowatt shown for the AFB retrofit.

Summary

When NSP's Black Dog Unit 2 goes into operation in 1986, it will be the largest fluidized bed steam generator in the world. As a result of retrofitting a unit designed for pulverized coal firing to fluidized bed combustion, NSP will gain 40 additional MWe in capacity while extending the life of a 32-year old unit that has been upgraded for an additional 25 years of operation. The Black Dog AFBC boiler retrofit project will also result in a considerable reduction in SO_2 and NO_x emissions, as well as provide for increased flexibility for burning numerous lower cost fuels. The economics of a potential fluidized bed retrofit candidate unit should be determined by means of a site specific engineering study. This will identify the specific requirements for retrofitting each unit being evaluated and identify the

associated costs so that a determination may be made regarding whether or not to proceed.

Operation of the NSP Project will begin in July 1986 and be followed by a detailed test and evaluation program to identify the unit's operating performance and unit availability over the first several years of operation.

TABLE 7

PREDICTED PROJECT COST

	125 MW (Gross) Retrofit $/kW*	125 MW (Gross) New $/kW*
Steam generation systems	110 - 200	200 - 260
Air and flue gas systems	20 - 50	50 - 70
Coal and limestone handling systems	20 - 50	70 - 100
Particulate removal systems	20 - 70	70 - 95
Plant solid waste systems	15 - 30	100 - 115
Water and liquid waste systems	5 - 10	60 - 70
Balance of plant systems	10 - 30	510 - 610
Total directs	200 - 440	1,060 - 1,320
Indirects/dist/cont	70 - 80	290 - 330
Total construction costs	270 - 520	1,350 - 1,650

4133-5323642-B1

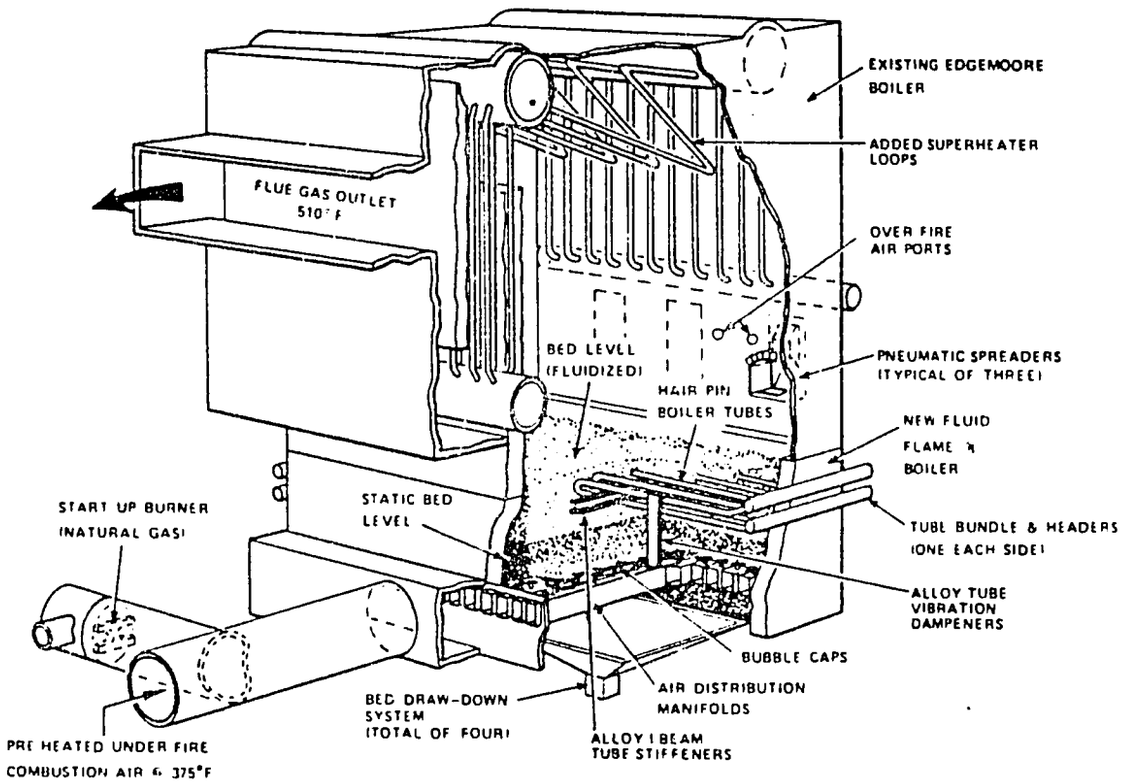

Fig. 1: The French Island AFBC retrofit boiler is fired by wood waste

Notes:

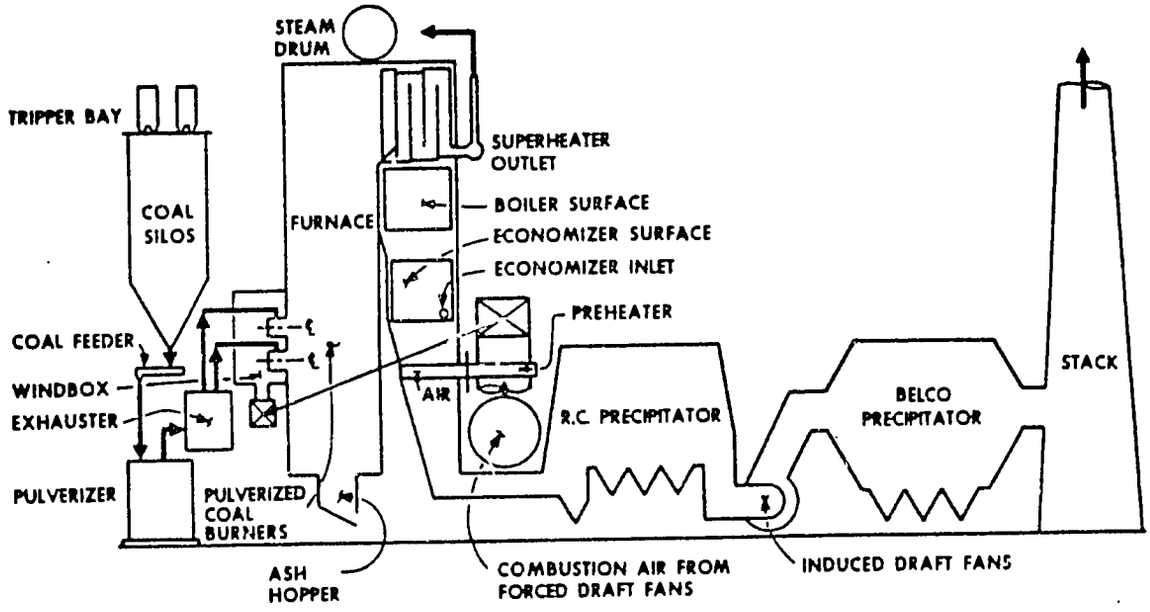

Fig. : The existing steam generator system at Black Dog Unit 2

Notes:

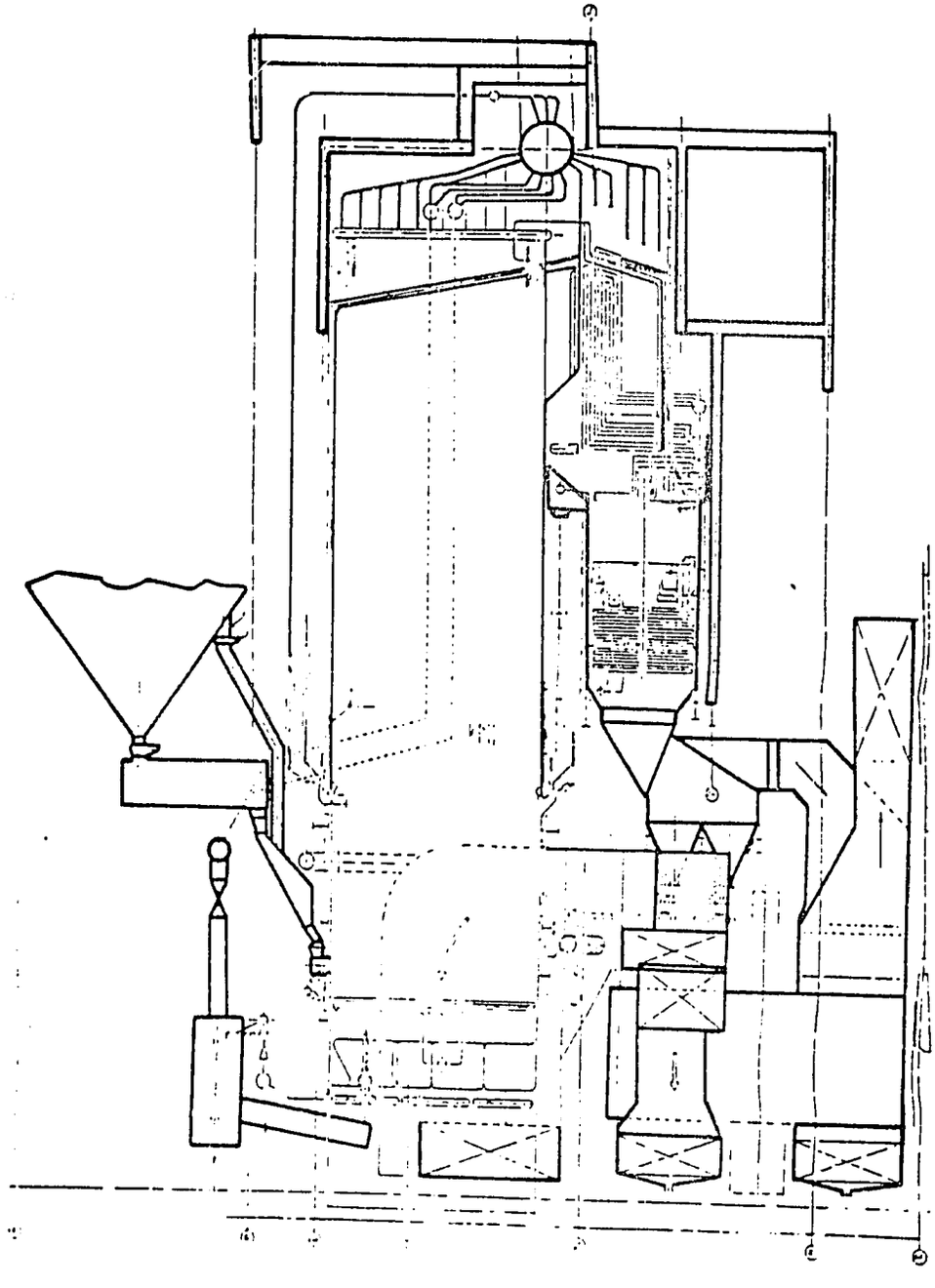

Fig. 5: Redesign for Black Dog Unit 2 retrofit

Notes:

QUESTIONS AND ANSWERS - AFTERNOON SESSION, DECEMBER 5, 1985

D. Daugherty - TVA

Q. What is the maximum evaporation of steam per pound of coal?

A. It depends on pressure and temperature of steam. AFBC units will run around 87 % boiler efficiency. Steam production can be back calculated from this.

Q. What is the cost of a pound of steam?

A. Its kind of hard to say. That depends entirely on the cost of fuel and the cost of the limestone that you use. We're trying to use a local fuel to minimize the cost. Of course, one of the advantages of a fluidized bed is we are able to use an inexpensive fuel. We have burned a low sulfur fuel at Shawnee, for which the fuel cost is running at $50 a ton for coal. We think we can use a much cheaper grade of coal. The cost will depend on what you pay for your fuel and whether or not you have to ship your limestone in from any great distance.

Q. Will you please throw more light on the EPA standard? What is the particulate matter permitted, the SO_2, NOx, in air? Do they take every day samples? And what is the punishment for violation?

A. Punishment for a violation is, of course, a fine. There are a certain number of violations that you can have. If you exceed these, then you are fined a certain amount. To date, the fluidized bed has been a research facility. We have been able to work out a plan with the state of Kentucky where we report our violations to them. We are not fined because we are a small research facility. But we do report these violations to them. There is no jail sentence that I am aware of. The severity of the violation is determined in each case. I don't know that we have received any fines for violations in our coal-fired facilities, because we have set emissions standards and we burn the coal to achieve those standards.

The NOx standard, as stated, is 0.6 lbs. for new coal-fired boilers; it does not effect existing boilers. We do not have any boilers that fit into the existing boiler category. The AFBC is particularly good because it is low temperature; therefore, as we said, in all our test plants we have never exceeded 0.25 lbs. with the AFBC boiler. So, we could go up to 0.6 lbs. for a new boiler. If you want to control NOx, AFBC is the way to go.

For SO_2, the standard we have now says 1.2 lbs. We have been able to achieve up to a 95% reduction in SO_2 from the pilot plant with recycle.

We have had to recycle to bring the unburned, unused limestone back in, so we have recycled it about 2-2½% in order to achieve that sulfur reduction.

In the U.S. now, the plant superintendents are subject for the fines, and for any resulting criminal action for violating those fines. We have been fortunate enough not to have had that happen to us yet.

Q. What is the maximum capacity AFBC unit developed in the U.S. today?

A. I don't know. I guess our 20MW is the biggest one. Don't let me miss lead you -- it is not connected to a turbo-generator. All we do is exhaust the steam to the atmosphere. It is purely a research facility.

Q. What is the optimum scaleup ration in the opinion of the Tennessee Valley Authority?

A. Recommend 3 to 10 scaleup increments. Limit to 3 where the risk is high.

Q. What is the amount of fines in the bed?

A. The bed contains essentially no fines because everything smaller than 30 mesh elutriates from the bed.

Q. Are fines generally 10-15%

A. At the 20 MW plant, using Kentucky No. 9 coal, the amount of fines in the feed stock vary with the size distribution. for ¼" x 0" feed stock, the fines run approximately 20% less than 30 mesh. For limestone feedings, 1/8" x 0" feed stock, the amount of fines are approximately 40% less than 30 mesh.

Q. Is it necessary to use limestone in AFBC with high ash Indian coals where the sulfur removal is less important than in the US?

A. If sulfur capture is not important, then limestone should not be used. After limestone calcines, it will elutriate very quickly if there is no SO_2 to react with. Use some other bed material, such as sand, or whatever is cheaper, that will not create erosion problems.

Q. Is the use of limestone compulsary? If so, why?

A. Limestone is not necessary or recommended if sulfur capture is not required. For AFBC boilers in the US, limestone and other sorbents are used solely for the purpose of sulfur capture. It is the inherent emission control ability of the AFBC process which makes it a viable alternative to

conventional boilers.

Q. Why is there a wider band of combustion efficiency for overbed feeding?

A. As the fines in coal vary, so does the combustion efficiency. Fines in coal fed overbed never reach the bed but burn in the freeboard. Some of the fines never burn. The more fines, the more carbon lost from the boiler.

Q. Can you justify the difference in efficiency between these systems by any simplicity in the overbed feed system and power consumption?

A. An overbed feed system would be less complex and less costly to operate than an underbed feed system. With certain type coals, especially those with high fines content, the combustion efficiency and sulfur capture penalties that would result from overbed feeding are greater than the additional cost of an underbed feed system.

The combustion efficiency and sulfur capture penalties for Kentucky No. 9 coal (high sulfur) far outweigh any mechanical savings. However, other coals might not incur these penalties due to their composition. For example, Sarpy Creek is low in sulfur and burns quickly. Therefore, no performance difference is seen between underbed and overbed feed operation.

Q. What is the status of PFBC in the US today?

A. Every survey by TVA over the past eight years indicates that PFBC has not advanced much toward being ready for utilities. PFBC appears to be at least five years behind AFBC. For 1600°F gas turbine at 40 % thermal efficiency, hypothetical PFBC of interest (the only PFBC worth utility interest), there are no known plans for early commercialization. The US Department of Energy is testing hot particluate removal with hopes of adequacy from a cross flow ceramic filter that in our opinion is likely to develop excessive plugging far sooner than DOE projected once-a-year replacement.

As yet there is no known followup on the Argonne National Laboratory/TVA concern that alkali metals (sodium and potassium) must also be absorbed at greater than 1600°F to avoid the deposition of low melting mixtures of Na, K, Fe sulfates on expansion cooling through the gas turbine, the cause of hot corrosion on stainless superheater tubes in conventional PC. American Electric Power, ASEA-PFBC are 1400°F proposals - EPRI is trying to get PFBC started at 800°F gas to pressurizing turbochargers - not combined cycle.

Q. At the 20 MW AFBC Pilot Plant, has TVA faced erosion problems in in-bed tubes, and in the bed tube support?

A. Yes, on both accounts. Minor level of erosion was experienced on the

in-bed evaporative tubes with little or no erosion on the in-bed superheater tubes. The major problem with bed tube supports was failure of 309 stainless steel welds on the uncooled members.

Clarence Eich - Foster-Wheeler

Q. What is the particle size used in CWS mixtures?

A. In the micron size, and over a range of sizes. The secret for CWS, when we are talking of the 70% coal, 30% water variety, you have to get a range of sizes. But it is in its very, very finest form in order of magnitude, and below what we normally use for pulverized coal.

Q. How good is the stability of the CWS mixture?

A. Very good. We have had it in suspension in a tank car for as long as three months without any detioration in stability. It can be kept longer by recirculating it. We've kept it longer just by pumping it from one tank to another just to stir it up. You don't have to use propeller-type mixers to maintain stability.

Q. Have you had any problems with the burners used for coal firing?

A. With that particular burner we were able to go down 50% with no trouble. We have cut down, on occassion, to 25% with no support flame. On the $100 million one we intend to go down to that range. To the best of my knowledge, the test we will run at General Motors will be the first time coal-water has been burned in a large water cooled furnace. Almost all of the test burns previous to this have been in a refactory lined test cell. That particular boiler, while it was water cooled, is a very old one and as you saw from the picture, had a considerable amount of refactory around it.

Q. Does the stored CWS mixture freeze in the U.S. climate? If so, do you need to warm the tanks?

A. You have to keep it warm. It has been frozen and then melted, and we have been able to use it. There has been no deterioration on freezing, but obviously you cannot pump it frozen, and it does freeze. The one thing that does happen, in a tank for instance, is it freezes around the outside and forms its own insulation. It is a fairly good insulator, so you have to leave it for quite a while before it freezes solid.

Q. Do you beneficiate the coal used in CWS mixtures? What is the extent of coal lost during beneficiation?

A. The recovery or the loss of coal, that really is part of the economics of beneficiation, the recovery is around 90-95%. So in effect, you will get around 95% original Btu value of the coal. You only lose about 5% during beneficiation. It is not necessary to beneficiate in order to make the coal-water slurry, so you look at the economics and at what you start with from a coal standpoint. Is it worth taking out the ash or the sulfur, or can you operate with the sulfur? In other words, we can buy very low

sulfur coal in the U.S. We wouldn't have to beneficiate it, and we could still meet the normal EPA requirements. However, if we can get a cheaper coal with higher sulfur and higher ash, then it pays to do the beneficiation. So, its really the economics. The other factor to consider is that this coal water slurry is pumpable. There is still quite a bit of work to be done in that area, but we feel rather confident that it can be done. Then you get into the question of transportation costs -- how much ash do you want to transport? Even if you can burn it at the other end, it is still costing you a considerable amount of money just to transport a high ash coal down the pipeline, or in a tank car, or however you transport it. I can't say that this is exactly what you do in every case. You have to analyze the coal not only for these properties because the slurry properties of coal vary, and the chemicals you need to slurry them vary with the different types of coal. What you would normally do, as we do, is start with a lab analyses of the coal and see what it would take to slurry, then move from there to a batch plant to see if it does what we think it does, and then, our final test is to put it through this pilot plant or our large plant in Tennessee, before we go for it.

Q. Are there any commercial boilers for CWS applications?

A. There is no commercial operation in the U.S. In Canada at Cape Greton, Chatham Station, there have been some fairly long runs, but not a commercial operation.

Q. Are there any special requirements to attain the CWS such as the quality of water used, and is the composition of coal a factor in the preparation?

A. It varies with the coal. With normal coal, we can get 70% loading of coal to 30% water. With some of the lower ranked coals we may not be able to get that high, although we do have some idea of what we can do to get to higher loading. For instance, in the U.S. we have been working with Southern California Edison on the Black Mesa Pipeline, where it is a very low ranked coal. That pipeline has been operating for years on coarse slurry, not the fine slurry we have been talking about. We have done some work on the possibility of converting it, and we have proven to ourselves that we can probably get close to the 60% coal. But it really depends on the coal and the ability of the coal to accept the chemicals to keep them in suspension; they are surface-active-type chemicals.

Q. Is there a dry method for coal beneficiation?

A. Not that I know of. Beneficiation for normal coal washing is a beneficiation process because you do wash some out. It seems to me that we did look at a process which was very finely pulverized, and with a gas separation process involved.

There has been some research going on between TVA, Oak Ridge, and I'm not sure who else, with high gradient magnetic separation. HGMS is a process in which you use a high magnetic field to separate out the iron part of the

coal that contains iron pyrites by alternating the magnetic fields in the coal as it passes around a track. It removes the irons from the coal, thereby removing the sulfur that is contained in the iron. That is the only dry process I am familiar with.

Q. Have there been any studies made on the erosion of burners?

A. Our colleagues in Japan have run tests on atomizing guns, and they have gone through enough to get something in the order of 1000 to 1100 hours, and they project about 2000 hours. This is with a ceramic insert. It is a problem. Our aim is to produce a reasonably good gun that will last about 2000 hours.

Q. Have you heard something on the economic scale of operation, keeping in view the high ash content of the coal which we get in our country? What would be your view of the economic of scale of operation of CWM?

A. I think the indications in the U.S. show that the smallest plant we would consider being economical would be somewhere between 750,000 tons/year and 1 million tons/year. We can't justify coal-water as a substitute fuel if the only reason is to substitute it for gas or oil because of competition with natural gas, or the present price of oil. In other words, the capital requried to convert an oil or gas fired boiler to coal would not justify the payoff. The coal-water will be less expensive than gas or oil, but the difference is not enough under our economy, with a 12% interest rate, to justify large conversions. There are particular cases in Tennessee where we will be able to convert from oil to coal for a nominal amount, and the transportation costs of the coal-water are very low because it is very close to our plant. We'll be able to do a conversion there, but the transportation costs are another major item you have to consider when you are talking economics.

Q. In view of the economics and tons/year in the U.S., in India, the process of beneficiation would be very costly because of the high ash content of the coal.

A. Yes, there is no question about that. When you look at the total cost of the fuel, the total cost of the plant is a rather small number, so that the price of your coal is very low. It becomes a major part of your cost structure. You really have to look at total costing from what you are paying for the coal to the ultimate user in order to determine what your economics are. For instance, we've been working with Russia on a coal-water problem. Their problem is very simple. They just don't have the transportation system to transport coal. They feel it is cheaper to build a pipeline rather than upgrade their rail facilities. As a result, they are very enthusiastic about building a pipeline in mid-eastern Russia, close to the Euro Mountains. I think you may want to consider that here. I understand, from some of the comments made here this morning, that you do have a problem as far as transportation is concerned, and it will be cheaper to build a pipeline.

V. Flanigan - University of Missouri-Rolla

Q. Do you produce tar during coal gasification in your gasifier, and is it a major problem?

A. It is not coal, it is wood. Yes, we do produce tar, and if we have a gas cleanup system, it will typically be in the water or in something of that nature.

Q. Are there any problems in removing the tar? If so, how do you solve it?

A. Yes, we have lots of problems. In Dr. Goss' system, he basically had a cyclone separater for solids, some kind of a wet scrubber system, and then a de-mister. That seems to be the common approach to removing the tars from the system. The tar recovery people in Cambridge, Massachusetts use this approach, and they have had extended operations of their 250 KW engine without any problems from tar. But they remove it, and it is put into a water stream. Then you have the problem of being able to use the water. You have to get rid of the tar and dispose of it in some acceptable manner.

Q. Have you considered any other fuels such as rice hulls?

A. Rice hulls is a perfect application for the fluid-bed systems where you can monitor the temperature and avoid the ash fusion problems that you might have. Any of the other agricultural residues, manure for example -- we've worked with manure -- straw, hay, whatever. They all work quite well as long as you can get some type of a particle that you can get into the gasifier.

Q. In general, what kind of ash removal system do you use?

A. Typically the ash is blown out the top and collected in a cyclone separater. The feed systems are normally just augers. Just screws with some kind of lock-hopper to maintain pressure because the big gasifier we saw operates at 15 psi. It supplies the gas to the burner at basically 2 atmospheres, one atmosphere above atmospheric pressure.

Q. Do you use wood as sawdust only or can you use wood chips as well?

A. It depends. With this system, we use sawdust only because of the difference in price between the sawdust and chips. The sawdust is available at $9.50 a ton delivered, and the chips are like $32 a ton delivered. So there is a tremendous difference in cost, plus the fact that the sawdust particle is perfect for these fluid-bed applications. But, they are also used in the papermills for fiber, so you are competing with the fiber product as an energy product.

Q. Do you need to prepare the feed prior to use?

A. No. It just needs to be dry.

Q. How do you handle the feeding of rice straw? Did you have to shred it?

A. What we did with the rice straw was run it through the hammermill and down to the screen to get pieces about an inch and a half long. We just fed them into the hopper again in the six inch gasifier. Yes, we shredded it, but into reasonably long pieces. We didn't try to make powder or anything.

Q. Can you use it directly from bails?

A. We have a technology in the states -- I heard this morning about hay and the large quantities that are available. We make these big round bails. We are looking at a project for this year to see if we can feed these round bails into our gasifier and combustion systems. I wish we could have a cow as a feeder. I think that is what we need.

Q. Can the biomass be pyrolyzed to a charred mass to be utilized further?

A. Sure. But when there is a large variation in the pyrolyzing process at any given time, you are probably going to end up with part of the product coming out over cooked, and another part hardly cooked at all. It is typical of pyrolyzing processes. For example, in our automated systems now, if you have large variation in particle size you'll have a great difficulty pyrolyzing the fuel.

Raj Gopal, Westinghouse

Q. How did you arrive at the size of the 30 MW capacity plant?

A. We are working on the solar plants in the U.S. in partnership with another company. In Southern California we received orders for 30 MW solar power plants; they have ordered 5 of them, and we are in the process of building these. That is how the 30MW size came about. Here I've been talking to some potential customers. They also like the 30MW power plant as a captive unit. In terms of fluidized bed, I guess we have a choice. The model we are presently using for the Florida job is an 11 MW per module, so we thought we could combine three of them and go with the 30 MW net output power plant.

Q. How do you arrive at an economical or optimum rate of solar power to FBC in this context?

A. We haven't completed all of the studies, but what we are presently looking at is when the sun is shining, it will generate 75% power through direct solar and operate the fluidized bed at 25% capacity mainly for super heating. In the evening and night time, we'll just use the fluidized bed for full power production. So, the load follow will be done in the fluidized bed 25% of full power and the solar, whenever they operate, up to 75% when the sun is shining. That is the concept we are looking for.

Q. Would it be cheaper to use a solar plant and store the heat generated? Wouldn't it have a smaller payoff period?

A. Storing solar heat is very uneconomical, or not possible. If you look at the economics, the solar pays off only after five years. Sridhar mentioned that India is a capital starved country, so even putting that into 75% solar is something that one has to debate, because it does not become economical for at least five years or so if you assume some price escalation for fuel.

Q. What is the medium for transferring heat?

A. Oil is the medium for transferring heat.

Q. What is the assessment of capital and the operating costs?

A. If it is going to be run by a private company, we wanted to keep the power costs at less than $.10 per kw hour. So the actual cost will be about $.07-$.08 per kw hour. The customer we have been talking with spends about $.20 per kw hour for diesal power generation. This plant will reduce the cost by a factor of two from what they are presently spending. At $.10 a kw hour, if one can sell it at that price, it does produce a good return on equity. As far as the capital costs are concerned, we are looking at

various options going all the way from $60 million to $110 million. It primarily depends on how big you make the solar field. A solar field cost from $2000 to almost $3000 per kilowatt. So it is quite a lot. The problem that comes about is the economics.

One of the things we will commit to do in this project is complete it within two years; it will be fully functional within 18 months to two years. Also, the technologies are independently proven, like the fluidized bed we are running and the solar field we are running. But I don't know, this is the first time we are trying to combine the two and there are some risks, but not technical risks. It is more a problem of being able to get a project done on time and within the budget.

Q. Isn't that a high risk venture?

A. Well, I don't know. Its not a high risk, but there certainly are risks involved.

Q. How many square miles are required for the plant?

A. You require about 100 acres of mirrors for a 30MW plant when you go fully solar. It is not a very large size compared to what you take for a conventional, coal powered plant, or even in a nuclear power plant. When you talk about a 1000 MW nuclear power plant, just the fenced area is 2000 acres. So, 2 acres per MW for nuclear, and coal also. Three acres per MW for a solar plant does not seem that big.

Q. In a conventional power plant, isn't the operational area just a fraction of the total area?

A. That's true. The area utilized is the same, except you can use it in any area. There are plenty of areas available. In the Mohave desert in California, even if you use 1/3 of the desert, you can supply power to the whole world up to the year 2000. So there is plenty of area available.

Q. There are often wide variations in load factors during solar power generation. In view of this, the AFBC will often need to assume the load requirements. Have you conducted any studies to assess this potential risk?

A. No. That's one of the risks, how much of a load follow this AFBC can take. That is something that we are looking at now. We don't have the answers yet. But we are in the process of doing it now.

S. Grieve - Stone & Webster

Q. Have you experienced any metal fatigue and erosion problems?

A. Not metal fatigue, but we did have erosion problems initially on all of them at Shell. To the best of my knowledge, there were no metal fatigue problems. The biggest metal problem we had was with erosion. This was solved with the studding you saw being used on those modules. The studding and pinning process has been used satisfactorily in the Netherlands for about a year.

Q. With the type of overbed feeding and the combustion efficiency expected would this economical?

A. We plan to use an overbed feed system. We realize the problems of efficiency and the possibility of freeboard burning if we have a lot of fines. But we have a rather high combustion chamber in there because of the original design -- I think it is 70 feet of freeboard -- so we expect the residence times would be fairly high with any fines so they will combust. Also, we believe that with a recycle rate of 1:1 we could get high efficiencies. I think they are talking about 98% or more efficiencies. I have some graphs on that. Don't take me literally on this. I will show a slide later on that shows what our tests reveal. I just looked at it briefly before I came. It is quite good for the type of coal we are burning. We are burning sub-bituminous -- not the best of coals. Let me get into the fuel feed systems. The overbed system has 12 feeders. Basically, it is a Detroit stoker device that Foster-Wheeler supplied. It is very straight forward and easy to operate. We don't expect to have a problem with the system. We have non-segregating shoots that we can feed moist coal into. That is underbed feed. You have to dry the coal, if you can, and do it successfully, fine. But we found that the client preferred the overbed system.

Q. Is the sulfur dioxide removed satisfactorly with the overbed system?

A. Yes. This coal is low sulfur so we are not primarily concerned with our sulfur emissions. We don't expect to have problems with sulfur. We are going to feed limestone in to take care of it and to get it down to the required levels. Maintaining sulfur levels seems to be a problem with fluid-beds.

Panel Discussion Session

Q. Why is AFBC and not PFBC the technology pursued by TVA?

A. TVA's involvement in atmospheric fluidized bed combustion has been going on for several years. We don't have any activity in the pressurized fluid-bed combustion work. That activity has mainly been lead by the Department of Energy in the U.S.A. Personally, we feel that the AFBC technology is further advanced in time -- it is more near term; therefore, we have been concentrating our activities in that area.

Q. Which is more popular - new FBC or Retrofit?

A. I think that AFBC has applications in both new and retrofit, as I said in the paper. I think from what you heard today in the presentations is the retrofit seems to be the one that is most popular right now. That is not to say that you couldn't build a completely new free standing unit, but people like to benefit from their existing equipment, particularly when there is an opportunity to upgrade an existing boiler. So from that standpoint, I would say that the retrofitted AFBC, or repowered AFBC unit is the most popular, but certainly that does not say that you cannot build a new unit from the ground up.

Q. How does overbed feeding compare with underbed feeding with respect to power consumption?

A. An underbed, pneumatic transport feed system requires more auxiliary power than an overbed spreader system. The main contributor is the blower or compressor to supply the transport air. This will be 50-1,000 horsepower per feed train.

Q. Can you justify the difference in efficiency between these systems by any simplicity in the overbed feed system and power consumption?

A. An underbed feed system will usually be more costly in both capital and operation and maintenance costs than an overbed system. Additional equipment required for the underbed transport system include blowers, seals against the transport pressure, and feed lines. The transport pressure seals and feed lines will require more maintenance than devices in an overbed system. An underbed system will require more auxiliary power as well.

Q. What is the maximum capicity AFBC unit developed in the USA today?

A. The present maximum capicity AFBC unit is 180,000 pounds/hour steam. In the future we expect it to be the 125 MW Northern States Power scheduled for operation in 1986, and the 160 MW Tennessee Valley Authority scheduled for operation in 1988.

Q. What is the fluidizing velocity of a circulating fluid-bed, the coal size and the coal feed system?

A. The usual circulating combustion velocity is 18 to 22 feet per second (5.5-6.7 meters per second). Coal size with a 10 to 15 % ash coal should be ½" x 0" (1.27 cm x 0) or essentially screened through a coal screen with 1.27 x 1.27 cm openings. If your coal does not contain much slate or other hard rock, 3/4" x 0" coal may be used. Remember that some 1" to 2" long rock particles will go through a vibrating screen of ½" openings. An accumulation of oversized rock will channel gas flow to increase local tube erosion. We would like to have a super hard and rugged continuous screw pump to feed the coal, but have not been able to get it developed yet. The usable alternative is two large, parallel lock hoppers with cone bottoms for dense flow. The Combustion Engineering, Inc./Lurgi or Pyropower systems are appropriate for their furnaces pressures.

Q. Is there any advantage to pressurizing the FBC in the context of steam generation? What are the applications?

A. There may be applications where the pressurized system would be better. I can't specifically identify these systems. My feeling is why burn the coal under pressure if you don't have to? Any time you pressurize the system, you are opening up to much more difficulty. I am sure there will some applications where the pressurized system will be better. There has been some idea that with a pressurized system you could have modular units easier than you could with an AFBC system. If that modular unit were smaller, could be shipped to remote areas, and assemble much easier than constructing an AFBC, that could be one distinct advantage if that does materialize. I guess in general, our feeling is if you don't have to pressurize it, don't because you pick up a lot more problems that way.

Q. You are going to windup with installment costs with overbed feeding, right?
A. Yes.

Q. Could you give us some of the magnitude of the cost of an overbed system?

A. No, I cannot. I'm sorry, I don't have the engineering details. But, I don't think that it would be an overwhelming amount. It is probably half as much as that of an underbed system -- that is just a guess. I will verify that though.

Q. What is the ash content of your mined coal used in CWS mixtures?

A. That depends on the coal. We have coal which started out at 7% ash and because we are going into retrofitting a package boiler with very tight spacing, we want to take the ash way down; if we can get it down. We were able to get that particular coal down to 3% from 7%. There are other coals

which started from 14% which we couldn't get below 9 or 10%. So, it is coal-specific, and the amount that can be cleaned out of the coal.

Q. Have you looked at other options for CWS mixtures such as gasification?

A. We have been talking to Texaco about the possible use of coal water slurry in their gasifiers where they don't need that high a filter. Again, I am not familiar with the process, but they tell me that when they have high heat loading with the process, they literally have to quench it to maintain the proper temperature within the gasifier. They're more interested in what kind of coal we can transport. For instance, if we could handle a lignite, Texaco would be very happy. We are working on that with them specifically, and if we have a 35:65 mixture, it would be perfectly all right.

Q. Some of the coals we are able to get on the market are not below 10% ash. Is it true that in the use of a CWS mixture, the oil fired boiler which has been designed for a particular rating would be of a lower capacity?

A. Yes, but the capacity would have to be limited. It depends on the boiler and how conservative the design in the back end is. We have studied many boilers. For instance, one of the big projects in the US for a while was to retrofit the oil fired boilers for Florida Power & Light. They were a 400 MW unit. Those happen to have been designed very conservatively, and we felt we could operate those at 100% capacity on fluid coal-water with even a 6% ash in the slurry. The reason for it being they were very widely spaced. At the time they were designed, they were designed for an additive to be used in the radium protection. When they were designed, they expected them to carryover from this dolomite-type additive, so we designed it for very wide-opened spacing. But some of the other ones which were very tight from a boiler design, you can be looking at as much as 25-30% reduction with coal. That has nothing to do with coal-slurry or pulverized coal or anything else. It is just the nature of the fuel.

Q. What is the concentration and the price of the additive?

A. I really can't say. Again, it is coal specific with the chemical additives. We're just in the process of starting to buy any bulk chemicals, so we're really not sure. It looks like, just as an order of magnitude, the price of coal we are talking about is maybe 10% of that price.

Q. What is the cost of oil in the United States?

A. I will give it to you in Btu. For a utility-type oil, you are looking at about 420-450 million Btu. The problem in the United States is that the price of natural gas has dropped down to where you see people getting contracts for natural gas at a much lower cost. We have a problem trying to convert boilers from oil or gas to coal-water slurry fuel because of the

prices. We can produce it for less than that, but you do have to pay the cost of conversion. It just doesn't pay off right now.

Q. Very recent coal slurry studies show that the economics don't look very good for coal-water slurry. In this context, how do the economics for coal-oil mixtures look?

A. Coal-oil technology was dropped for economic reasons, several years ago. But it is far more expensive than coal-water. Coal-water is the least expensive of the two. Coal-water, right now, is very questionable. For instance, in Tennessee we are able to sell it locally, but the transportation costs are minimized and we are able to compete with the local gas and oil prices. Here we are talking about boilers which were designed primarily for oil to start with, converted to coal, converted to oil and now converting back to coal. The other thing that hasn't been looked at, but we have come up with the possibility of, is the possible addition of lime into the slurry in order to further reduce the sulfur emissions so that we will be able to avoid some of the problems that are inherent in EPA requirements. There is no problem as far as NOx is concerned, but there is a problem with sulfur. There is always the questions of a reduction in capacity. Some boilers can go to full capacity and others can't. It depends on the boiler design. The economics are very problematic, there is no question about that. A lot is dependent upon the price of oil and what happens to it. If it starts it back up, then the price of gas would follow and the economics would turn around. So our position right now, as a company, is to stay involved in it, but we don't expect to build a million ton/year plant because we will not be able to find anyone who will want to take it up today. But we think there will be a change in the economics of the system.

Q. Can the coal-water slurry technology in the U.S. be commercialized using any U.S. coals?

A. It is commercial in U.S. in the case of the Eastern bituminous coal. There is a lot of work to be done with the Western sub-bituminous, lignites, and other low rank coals. We are obviously working with them right now, so there is a technology to be developed. We are looking at the use of additives for sulfur capture.

AFBC TEST FACILITY FOR THE EVALUATION OF FREEBOARD PERFORMANCE
BHEL/USAID JOINT RESEARCH PROJECT

S. Chandrasekaran
A.V.V. Murthy

Industustrial Power Products Division
Bharat Heavy Electricals Limited
Tiruchirapalli, India

R.P. Krishnan

Oak Ridge National Laboratory
Oak Ridge, Tennessee, U.S.A.

A F B C TEST FACILITY FOR THE EVALUATION OF FREEBOARD PERFORMANCE
B H E L / U S A I D JOINT RESEARCH PROJECT

By

S. CHANDRASEKARAN
A. V. V. MURTHY
INDUSTRIAL POWER PRODUCTS DIVISION
BHARAT HEAVY ELECTRICALS LIMITED
TIRUCHIRAPALLI - INDIA.

R. P. KRISHNAN
OAK RIDGE NATIONAL LABORATORY
OAK RIGDE, TENNESSEE 37831
U. S. A.

ABSTRACT

A Collaborative research project funded by the U. S. Agency for International Development (USAID) and Bharat Heavy Electricals Limited (BHEL), has been initiated at the BHEL high pressure boiler plant site in Trichy, India. The project involves the design, erection and commissioning of a one metre square cross section Atmospheric Fluidised Bed Combustor (AFBC). The test facility will be used to obtain engineering and performance data on the combustion and heat transfer in the freeboard region of the AFBC. High-ash Indian coals, low grade fuels and high sulfur U. S. coals will be tested in the combustor. The Industrial Power Products Division (IPPD) at BHEL Trichy and the Oak Ridge National Laboratory, USA have the joint technical responsibility for carrying out the project. The project was initiated in November 1983.

This paper describes the current status and the activities planned for the future.

AFBC TEST FACILITY FOR THE EVALUATION OF FREEBOARD PERFORMANCE

1.0 INTRODUCTION AND BACKGROUND :

Under the united, States Agency for International Development (USAID)/Government of India (GOI) Coal-Biomass Programme, a 1mX1m cross section fluidized bed combustor with the auxirliary systems is being erected at BHEL, Trichy, India. The purpose of the FBC test facility is to obtain performance data on the combustion, heat transfer and sulfur retention in the freeboard region of the FBC. Very little quantitative information is available in this area. Experimental data are needed for developing correlations for the design and scale-up of FBC systems for heat and power generation utilizing high ash coals and coal washery rejects.

In this study, a well instrumented FBC research test facility will be used to provide the necesssary performance data on combustion, heat transfer, dust loading, particulate and gaseous emission when operating with high ash content (up to 70%) coals, coal washery rejects and high sulfur U. S. Coals. Much of the instrumentation needed for precise measurements of gas composition, solid feed rate, heat transfer, dust loading etc., are not manufactured in India. Furthermore, a versatile data acquistion and analysis system needed for such a test facility is also not available in India. These instruments have been obtained through USAID for the test facility. The Oak Ridge National Laboratory (ORNL), is providing technical assistance to BHEL in the selection and procurement of instrumentation and in the design, erection and testing in the experimental facility.

Since the initiation of the project in November '83 several milestones have been met. These accomplishments have been periodically reported in the progress reports to USAID and BHEL management (Ref 1, 2, 5 & 6) The intent of this paper is to present the current status of the project and highlight those activities since the Second Annual Coal/Biomass Workshop held in February '85.

2.0 PROJECT OBJECTIVES

This project is a detailed investigation of a specific region of fluidised bed combustor designated the "freeboard region" in an experimental test facility with the following objectives.

Design. construct and commission a 1 m × 1 m cross section atmospheric fluidised bed combustion (AFBC) research test facility at BHEL–Trichy,

- Gather performance data on combustion, heat release and heat transfer rates along the freeboard height.
- Obtain data on dust loading and gas composition along the freeboard height.
- Obtain combustion efficiency/carbon burnup data as a function of fuel type and size.
- Obtain data on SO_2/NOx emmissions in the freeboard and their effect on unit emmission and sorbent utilisation.
- Correlate experimental data in terms of the design and operating parameters for performance prediction and scale up to large AFBC system.

3.0 PROJECT MILESTONES

No.	Description	Status
1.	Detailed engineering design of the test facility, and specification of instrumentation	Completed-March '84
2.	Preparation of the design document	Completed-May '84
3.	Review of the design by FBC organisations/ experts in the US with BHEL Engineers	Completed–August '84
4.	Ordering of special instrumentation from the U. S.	Completed–October '84
4a.	Ordering of indigenous equipment	Completed–October' 84
5.	Training of BHEL engineers on data acquisition system (DAAS)	Completed-June' 84
6.	Shipping of Gas analysers, DAAS and gravimetric feeders from U. S. and receipt at BHEL, Trichy	Completed–Sept' 85
7.	Preparation of manufacturing drawings, procurement of materials and equipment and fabrication of components	Completed-Nov. '85
7a.	Excavation for raft base column foundations and casting	Completed-Oct '85
8.	Erection and commissioning	Ongoing–Completion by Dec. '85
9.	Testing, data gathering and data analysis-Phase-I	Jan '86-Dec. '86
10.	Testing, data gathering and data analysis-Phase-II	Jan '87 Dec. '87
11.	Final report preparation	December '87–Feb. '88

4.0 TASKS ACCOMPLISHED AND CURRENT STATUS

The description of the AFBC test facility and the auxiliary systems has been presented in detail in Ref (5). Tasks accomplished to date in the different areas are described below.

4.1 Machanical Engineering Design :

Industrial Power Products Division (IPPD), BHEL, Trichy took up the mechanical engineering design of the test facility and the various sub-systems. (Ref: 1). Preparation of the manufacturing documents were initiated after the design review in the U. S. in July '84. The suggestions made by the reviewers (See Appendix 1 and 2 Ref : 5) were incorporated in the manufacturing documents and released for fabrication.

4.2 Materials and Equipment :

Materials required (70 tonnes of plates & tubes and rolled steel products) for fabrication of the combustor, pressure parts, non-pressure parts and structures were identified and procured through BHEL's material management department.

Indigenous equipments (Roots blower, ID Fan, Rotary feeders, slurry pump, etc) were ordered and inspected at various stages of its manufacture. The list of items ordered and the suppliers is presented in Table : 1 The coal/limestone gravimetric feeders were supplied by M/s. Merrick Corporation, USA.

TABLE I

Indigenous Equipments

Description	Supplier	Status
Electric hoist	M/s. Greeves Cotton, Madras.	Received-Aug '85
Induced Draft Fan	M/s. Industrial Systems & Equipments Ltd, Madras.	Received - Nov '85
Air lock feeder (variable speed)	M/s. Avron Engineering, Bombay.	Received - Sept '85
Air lock feeder (constant speed)	M/s. Avron Engineering, Bombay.	Received - Nov '85
Air lock feeders (water cooled)	M/s. Avron Engineering, Bombay.	Inspected - Nov '85 Expected after rework - Dec '85
Roots Blower	M/s. Swam Pneumatics, Delhi	Inspected and Shipped - Nov '85
Castable Refractory	M/s. Associated Cements, Bombay.	Received - Jan '85
Fire bricks	M/s. Nataraj Ceramics, Kallakudi,	Received - Aug '85
Insulating bricks	M/s. VRW, Madras.	Received-March '85
Mineral wool mattress	M/s. Lloyds Insulations, Madras.	Supply and erection Nov/Dec - '85

4.3 Fabrication :

The combustor and the sub-systems were fabrioated at the R&D work shop attached to IPPD, BHEL, Trichy. Pressure parts components (bed coils, convection coils, heat transfer test loops, external piping with associated valves and fittings) were manufacfured in the sheps of the BHEL-High pressure Boiler plant. The fluidised bed air preheater required for the test facility is being manufactured as a sub-contract Until the airheater is installed and commissioned, the combustor will be operated without the airheater by Providing bypass ducts. Since the airheater is required only for specific test runs, this arrangement will not interfere with the commissioning of the test facility. Structural components were fabricated at the FCB complex as well as at the R&D workshop of IPPD, BHEL, Trichy.

4.4 Civil Works :

The foundation drawings with the load chart were finalised and plan released to Civil Projects Group, BHEL, Trichy in April 1985. Site preparation and excavation were initiated in August 1985 and completed in October'85. A raft type foundation with twelve pedestals has been adopted for the facility encompassing the combustor, FBC airheater, multiclones coal/limestone bunker, and gravimetric feeders. Individual foundations have been provided for the auxiliary equipment consisting of Roots blower, the induced draft fan, the slurry pump and the duct supports. The main facility has an asbestos roofing and side claddings.

The control room measuring 8 m × 5 m is a separate building located 5 m from the main test facility, Special features of the control room include dust proof, noise proof, slatic proof, false ceiling, air canditioners and glass panels for visual observation of the combustor during operation. The control room houses the Beckman gas analysis system, the control and instrumentation panel and the data acquisition and analysis system.

4.5 Instrumentation & Controls :

The control panel houses the flow indicators, pressure transmitters, temperature indicators, coal/limestone feed indicators and the control swiches for most of the auxiliary equipment (Roots blower, induced draft fan, slurry pump, gravimetric feeders, electrical hoist and air/water circuit). The combustor is also provided with multiple tappings in the bed and in the freeboard regions for measurement of temperature, heat flux, heat transfer coefficient, gas composition and solid composition. Details on the sampling locations and the measurements techniques are given in Ref : 3 A versatile data acquisition system (Ref : 5) with a desktop computer, graphic display and printer will log the data during operation. A software package for doing the performance calculations on the major parameters will be built Into the system for continuous monitoring of the process. In

addition the DAAS system will be linked to the existing BHEL main computer for storage and retrieval of the data records.

4.6 Electricals:

The Maintenance and Services Group at BHEL, Trichy are executing the electrification of the test facility and the control room. The work scope includes laying of control cables, power distributor board, internal wiring and installation of control panel, complete wiring of the control room and test facility and lighting and airconditioning.

4.7 Erection :

A total of 120 tonnes of finished components for the test facility and the sub-systems have been erected at the FCB Complex, BHEL, Trichy. The componentwise tonnage is provided in Table II. The erection was performed by M/s. S. K. S. Fabricators. Trichy as a subcontract at a cost of Rs. 1,42,000/-

5.0 PRECOMMISSIONING & SHAKEDOWN :

The precommissioning of the auxiliary systems at the test site is scheduled for December'85 Inspection and performance testing of the individual equipment have already been completed at the manufacturer's site. Precommissioning activities include curing of combustor refractory walls, cold fluidization trials, and functioning / calibration of individual equipment and instrumentation at the test site. Coal burning and shakedown trials will start by the end of December'85.

TABLE-II

COMPONENT-WISE TONNAGE

Components	Tonnes
Structurels & Supports	40
Non-pressure parts	10
Combustor Steel	7
Combustor refractory	25
Coal feeding system	5
Pressure parts and external piping	8
FBC Airheater	10
Roofing and side claddings	15
Total	120

6.0 ACKNOWLEDGEMENTS :

The authors wish to thank the U. S. Agency for International Development (USAID) and Bharat Heavy Electricals Limited (BHEL) for providing financial support for this effort. Appreciation is extended to Dr. D. Bienstock, Deputy Director, Pittsburgh Energy Technology Center, U. S. DOE, Mr. M. K. Sridhar, Director/Technical, BHEL and Mr. E. S. Chandrasekhar, Group General Manager, BHEL, Trichy for their encouragement and support. The authors are indebted to Mr. K. T. U. Malliah, General Manager, IPPD, BHEL, Trichy and Mr. Rajaram, Manager, FCB Group, BHEL, Trichy for the timely assistance rendered during the critical stages of the project. Thanks are due to all the BHEL staff involved in the various phases of execution of this project, in particular, the civil projects group. structural engineering group and the facilities group of IPPD.

7.0 REFERENCES :

1. R. P. Krishnan, S. Chandrasekaran. et, al, "BHEL/USAID FBC research test facility - Design Report" , APR 1984.

2. "Evaluation of Freeboard Combustion in AFBC" , First Semi Annual Reporr, June 1984.

3. R. P. Krishnan, S. Chandrasekaran et, al, "Evaluation of Freeboard Performance in a Fluidized Bed Combustor" , Second USAID/GOI Annual Coal - Biomass Workshop, New Delhi, INDIA, Feb 4 - 6, 1985.

4. P. P. Krishnan, S. Chandrasekaran et, al, "Evaluation of Freeboard Performance in AFBC" , paper presented at the 8th International FBC Conference, Houston, Texas, USA, March 1985

5. R. P. Krishnan, S. Chandrasekaran et, al, "Evaluation of Freeboard Performance in a FBC" , PETC FORM 81-B (1-80), US - DOE, USA, July 1985.

6. Semi - Annual Report on Coal/Biomass programs, PETC, US - DOE, USA, June 1985.

AFBC BOILER SCALEUP

S. Rajaram
G. Viswanathan
S. Sundararajan

Industrial Power Products Division
Bharat Heavy Electricals Limited
Tiruchirapalli, India

A F B C BOILER SCALE - UP

By

S. RAJARAM
G. VISWANATHAN
S. SUNDARARAJAN
INDUSTRIAL POWER PRODUCTS DIVISION
BHARAT HEAVY ELECTRICALS LIMITED
TIRUCHIRAPALLI - INDIA.

A F B C BOILER SCALE - UP

1.0 INTRODUCTION :

India has an estimated reserve of 112 billion tonnes of coal, of which 26 billion tonnes are proven. A large fraction of the proven coal reserve is of poor quality (30 to 50% ash) and the coal allocated to the Energy Sector is of an inferior variety.Conventionally fired steam generators when fired with such poor quality coal experience unscheduled outages due to pulveriser wear, erosion in economiser, air heater and ID fan and coal flame stabilisation. AFBC offers an excellent potential for the utilisation of such low rank fuels. BHEL began work on AFBC a decade ago and has today developed commercial boiler designs in the capacity range 10 to 100 t/h. Based on the operating experience and data collection in their operating commercial installations (12 t/h unit for 20000 hrs and 45 t/h unit for 12000 hrs) BHEL initiated design of a 150 t/h (330700 lb/h) unit by framing a set of scale-up parameters. This project involves the completion of the proposal design by BHEL and submission of this information to TVA through USAID for evaluation and verification of scale-up parameters.

2.0 OBJECTIVE :

The objective of this project is to develop the design of the 150 t/h (30 MWe) AFBC boiler, have the design reviewed by TVA and finalise the design to incorporate TVA's comments.

3.0 METHODOLOGY AND MILESTONES :

3.1 BHEL would develop the design, general equipment arrangement and equipment specifications for the 30 MWe unit.

3.2 TVA would evaluate the scale-up design and offer their comments.

3.3 TVA engineer would visit all operating FBE boiler installations in India, and also hold preliminary discussions with BHEL engineers on the scale-up design.

3.4 BHEL engineer would visit TVA to finalise their comments on the 30 MWe unit.

3.5 A presentation would be made on the finalised design at the Third anuual workshop on Coal - Biomass conversion in December 85.

4.0 WORK ACCOMPLISHED :

4.1 The proposal design with equipment specification and arrangement drawings prepared by BHEL were forwarded to TVA through USAID in December 1984. The details were presented in the USAID/GOI. Second Annual Coal-Biomass Workshop, at NEW DELHI in Feb. 1985

4.2 TVA had an inhouse review of the design and two TVA engineers had preliminary discussions with BHEL engineers in India during February 1985.

4.3 The comments of TVA were finalised during the visit of BHEL engineer to TVA in April 1985. Based on the comments the following changes are incorporated in the design.

4.3.1 As Sulphur retention is not a prime concern in India, (as Indian coals have low sulphur) the bed temperature is increased to 900° C to improve combustion efficiency.

4.3.2. Two forced draft fans and primary air fans are provided to improve boiler availability.

4.3.3 The pressure drop across the air distributor is maintained more than 75 mm (3") water column during any operating condition

4.3.4 Horiozontal in-bed tubes instead of inclined tubes to avoid bubble growth in large fluidised beds.

4.3.5 A cooled distributor plate is adopted for better structural rigidity for such large beds.

5.0 GENERAL DESCRIPTION OF THE FLUIDISED BED COMBUSTION STEAM GENERATOS AND AUXILIARIES :

The steam generator is of the bottom supported non-reheat, bi - drum atmospheric Fluidised Bed, semi - outdoor type unit, designed for firing coal. The boiler parameters have been listed in Tab' 1. The fue analysis is given in Table 2.

The general arrangement of the boiler and auxiliaries will be as shown in the layout drawing (Fig 1, 2, 4). The complete furnace section is of the welded wall type, arranged as a gas and pressure tight envelope. This eliminates the re actory material from the entire furnace wall section, besides providing structural rigidity for the unit. The steam and water drums are conservatively designed and the bank tubes connect both the drums.

Part of the evaporating heating surface is located within the fluidised bed proper. The superheated steam system is in two sections. The first stage superheater is located at the furnace outlet section and the second stage superheater section is located within the fluidised bed proper to ensure the rated superheated steam temperature. An interstage desuperheater is provided in between the two stages of superheater, to control the final steam temperature from the unit. The boiler is provided with a bare tube economiser fabricated from plain seamless steel tubes. The Economiser will be arranged after the boiler bank section and enclosed by flue ducts. The boiler is provided with a tubularairpreheater as the last stage of heat recovery.

The coal feeding system consists of rotary (Fig. 3) air lock feeders, and feed piping through which the crushed coal is pneumatically transported and fed to the fluidised bed.

The main boiler is of the bottom supported type and requires simple concrete piers for support. The boiler is provided with two forced draft fans for supplying the required air for fluidised combustion, and two primary air fans for transporting the crushed coal to the fluidised bed. The boiler is equipped with two radial ID fans arranged after the dust collecting system. An electrostattc precipitator is located before the ID fans to collect the fly ash from the flue gas.

6.0 BOILER PRESSURE PARTS SYSTEM :

The details of the boiler pressure parts system include :

1. Economiser system.
2. Circulation system including steam and water drums, boiler bank, downcomers, water walls, bed evaporater, circulating pumps and riser systems.
3. Superheater system.

6.1 Economiser System :

The economiser system (Fig. 5) draws the feed water through the feed pipes to the economiser inlet header. The economiser is located in a gas duct after the boiler bank. It has a continuous loop, plain tube, drainable horizontal, in-line arrangement. The feed water after it is heated in the economiser leaves the economiser outlet header to the drum.

6.2 Circulation System :

The hot feed water from the economiser (Fig 6) is discharged into the steam drum below the water level where it mixes with the recircu-

lated water. The mixed water flows through the comparatively cooler bank tubes to the lower drum. In addition the outermost boiler bank side wall tubes are specifically designed as down comer sections to ensure adequate water flow to the lower water drum. In the boiler bank section the front rows of bank tubes (which are comparatively hotter) act as riser tubes and the rear rows of tubes act as down-comer tubes, thus forming a circulation system within the boiler bank. A portion of the water from the water drum flows to the water wall system lower headers, which act as the inlet to the furnace water wall tubes. As the water rises up through the water wall tubes it gets convered partially into steam. Circulating pumps (three units with one standby) draw water from the bottom drum and force it through the horizontal evaporator outlet headers flow back to the drum, through separate riser tubes, where the drum, internals separate the steam and water; the saturated steam flows to the superheater section and the water flows back into the circulation system.

6.3 Superheater System:

The superheater system (Fig. 7) provided will include a first stage superheater located at the furnace outlet, a second stage immersed in the fluidised bed and a desuperheating system in between the two stages for controlling the final superheat steam temperature.

The convection superheat located at the furnace outlet will be a spaced, continuous loop, plain tubular type and would be hung from the furnace top.

A second stage superheater is located within the fluidised bed in three main segments. The start up segment has no superheater immersed in it. For controlling the final superheated steam temperature at the rated value, over the control range of the boiler, a spray type desuperheater is provided in the steam connecting link between the two stages of superheater. This interstage desuperheater will be of spray type.

7.0 FLUIDISED BED ARRANGEMENT :

7.1 Design Parameters :

Based on the operating experience and discussions with TVA the following basic parameters were adopted for the design of the AFBC boiler.

Superficial fluidisation velocity	:	2.5 m/s
Average bed temperature	:	900° C

Excess air (on fuel fed basis)	:	10%
Combustion above bed	:	10%
(as a % of Heat input)		
Average bed particle diameter	:	0.8 mm.

7.2 Bed Surface Arrangement :

The fluidised bed is arranged as a single cell. The bed comprises of three main bed sections in which the superheater surface and evaporator surface are immersed and a fourth bed section having two zones one containing evaporator surface and the other zone (start-up bed) having no surface immersed. The start up bed is initially actuated. Adjacent section of the bed is then activated, and brought into service by feeding air and fuel. After sufficient steam flow has been established by the immersed evaporator section of the start up bed, the main beds are actuated after ensuring the inbed superheater surfaces are cooled by the steam already generated.

7.3 Wind Box Arrangement :

The wind box is divided into five compartments two smaller compartments for start-up bed and three main compartments. Air flow meters are provided to monitor and control the air flow through bed sections. Provisions are made in the air box for the coal feed pipes and the bottom ash discharge system to traverse through. The wind box is supported on the water walls.

7.4 Distributor Plate Arrangement :

In the first generation design BHEL adopted a multiorifice type distributor. Eventhough the fluidisation performance was good, the long term reliability after many start-ups was not very satisfactory. After testing several types of air distributors in a test rig specially meant for this purpose, BHEL has evolved a nozzle type distributor and optimised the design with suitable material of construction, the pitch of the nozzle, height and hole size.

The nozzle type design protects the air distributor against the hot bed temperature during boiler operation, and also the thermal shock that the distributor would be subjected to during a unit trip, FD fan failure, or load reduction and consequent slumping when the hot bed lands on the air distributor.

8.0 COAL FEED SYSTEM :

The coal feed system draws the crushed coal of size 0 to 6 mm from the crushed coal bunkar by gravity on to the rotary air lock feeders that help to feed coal against pressure. The coal discharged from the feeder is transported pneumatically to the fluidised bed through steel pipes. The air required for transportation of the coal is drawn from the forced draught fan and the pressure is boosted in the primary air fan before it is supplied to the air heaters. Control valves on the headers regulate air flow through coal/air pipes. The fuel is then pneumatically conveyed to the coal splitter where the fuel is distributed and fed into the fluidised bed by underbed feed lines. Individual air heaters are provided for each compartment with necessary air measuring and control devices for shut off if required. The rotary air lock coal feeder is a volumetric type of feeder which helps feed coal against pressure, by effective sealing. A dynodrive mechanism which controls the eddy current flow helps regulating the speed of the rotary air lock feeder and hence the coal flow into the air fuel lines. The start-up compartment is provided with one such coal feeder with line splitters while each main bed section has two coal feeders with line splitters. Adequate reserves have been built in the capacity of the coal feeders so as to maintain boiler load even while a few of the feeders are out of service. Coal/air pipe bends are adequately lined to prevent erosion

9.0 BED ASH LET DOWN SYSTEM :

The bed ash let down system maintains the level of the fluidised bed which would otherwise swell warranting a boiler shut down. It also helps to drain the higher size material that do not fluidise or to drain the entire bed during a shut down.

10.0 DRAFT SYSTEM :

The AFBC boiler has a balanced draft system with the forced draft (FD) fans supplying the air for combustion and the Induced draft (ID) fans sucking the hot gases out to maintain near atmospheric pressure in the combustion chamber. The Primary Air (PA) fans boost a portion of the air leaving the FD fans and this air is utilised to transport the coal to the fluidised bed.

11.0 TUBULAR AIR HEATER :

The boiler will be epuipped with a tubular air heater (Fig. 8) with gas flow through the tubes and air flow outside the tubes. The air heater will be

supported on necessary steel work and will be complete with all air /gas ducting, insulation and outer casing. A refractory lining is provided at entry to the AH tubes to prevent erosion of the AH tubes.

12.0 DUST COLLECTING SYSTEM :

An electrostatic precipitator is located after the tubular airheater and ahead of the ID fans to collect the ash from the flue gases before it leaves the stack A four field EP is provided to dedust the flue gases. The EP is sized for an outlet dust omission of 250 mg/Nm^3.

13.0 CONTROL SYSTEM :

The automatic control system is provided for efficient running of the boiler. The steam temperature control loop is designed for maintaining the temperature within the guarantee limit. The control system of the boiler can be divided under the following control loops.

1. Three element feed control.
   This maintains the boiler drum level constant by computing feed water flow and steam flow.

2. Steam temperature control :
   This maintains correct temperature of outlet steam.

3. Furnace draught control.
   This maintains constant draught at the combustion Chamber.

4. Combustion control :

   This maintains the steam pressure on the boiler constant by varying coal flow and air flow for optimum combustion efficiency.

14.0 FUTURE WORK :

In the preceding paragraphs a brief description of the 30 MWe AFBC boiler reviewed and finalised with TVA is presented. Work has already been initiated on the setting up of a 30 MWe AFBC demonstration project with the steam generator as an add-on to an existing customer power plant, with part fundings from USAID, DNES, BHEL and the customer.

TABLE 1

BOILER PARAMETERS

		100% Boiler MCR Load
Main Steam		
Flow (at Main steam stop valve)	t/h	150
Pressure (at Main steam stop valve)	$Kg/cm^2(g)$	63
Temperature (at Main steam stop valve)	°C	496
Feed Water		
Temperature entering economiser	°C	210

TABLE-2

FUEL ANALYSIS

COAL

PROXIMATE ANALYSIS (As fired % weight basis)

		RANGE
Moisture	%	6.1 – 17.0
Ash	%	32 – 50
Volatile Matter	%	14 – 23
Fixed Carbon	%	18 – 38
Higher Heating Value	coal/Kg	2300 – 4635
Coal size		Minus 6 mm

ULTIMATE ANALYSIS (As fired % Weight basis)

		Performance Coal	Worst Coal
Moisture	%	6.12	17.00
Ash	%	32.18	50.00
Carbon	%	51.6	23.94
Hydrogen	%	3.28	1.75
Sulphur	%	0.5	0.33
Oxygen	%	5.3	6.48
Nitrogen	%	1.02	0.50
	Total	100.00	100.00

15.0 ACKNOWLEDGEMENT :

Contribution of Dr. R. P. Krishnan, ORNL specialist to the growth of this project is significant. The authors thank the management of Bharat Heavy Electricals Ltd. for granting permission to present this paper in this Seminar. Thanks are also due to all the engineers of the FBC group who have contributed directly or indirectly in the preparation of this paper.

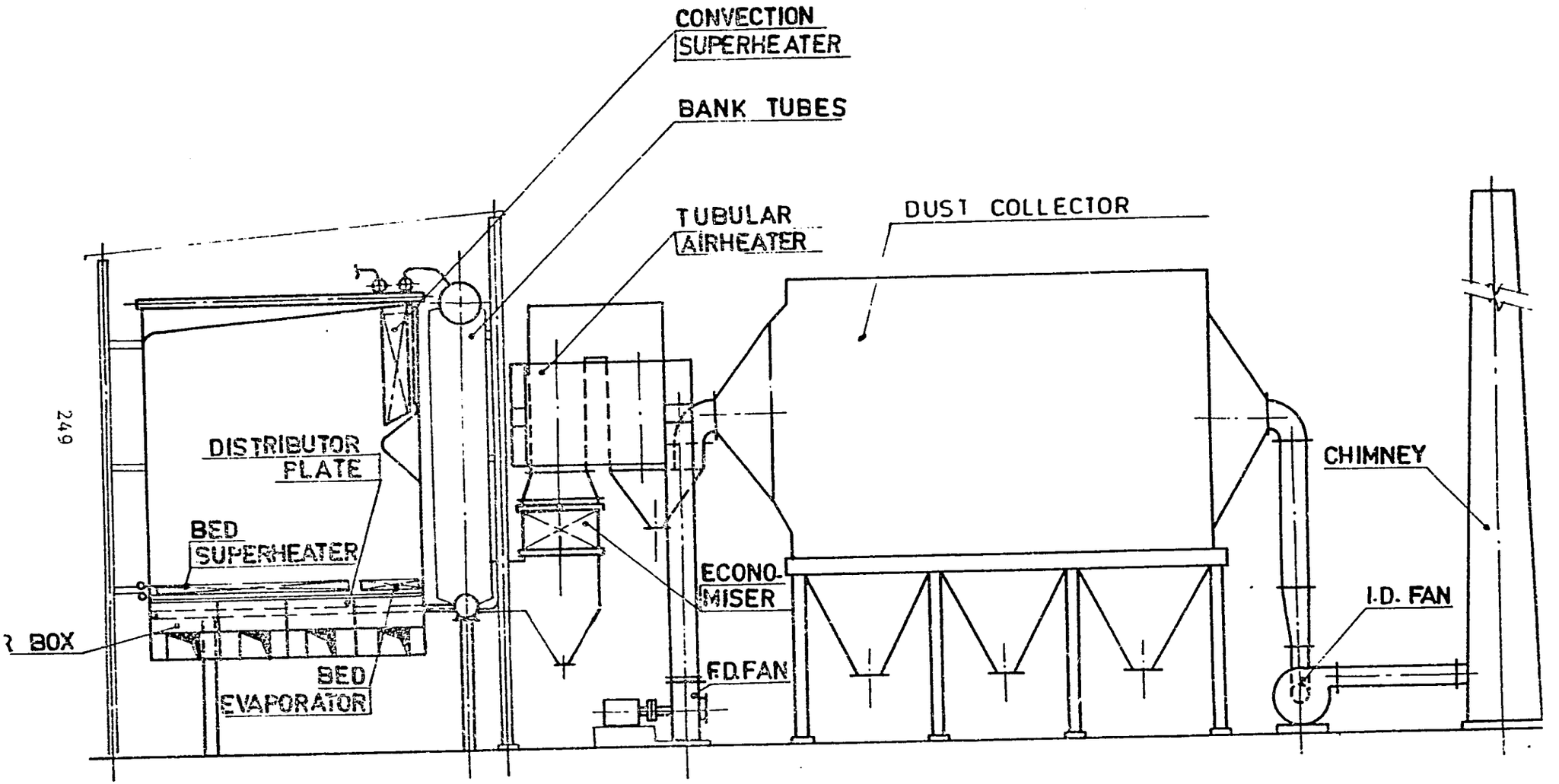

FIG.1 GENERAL ARRANGEMENT 30MWe AFBC BOILER

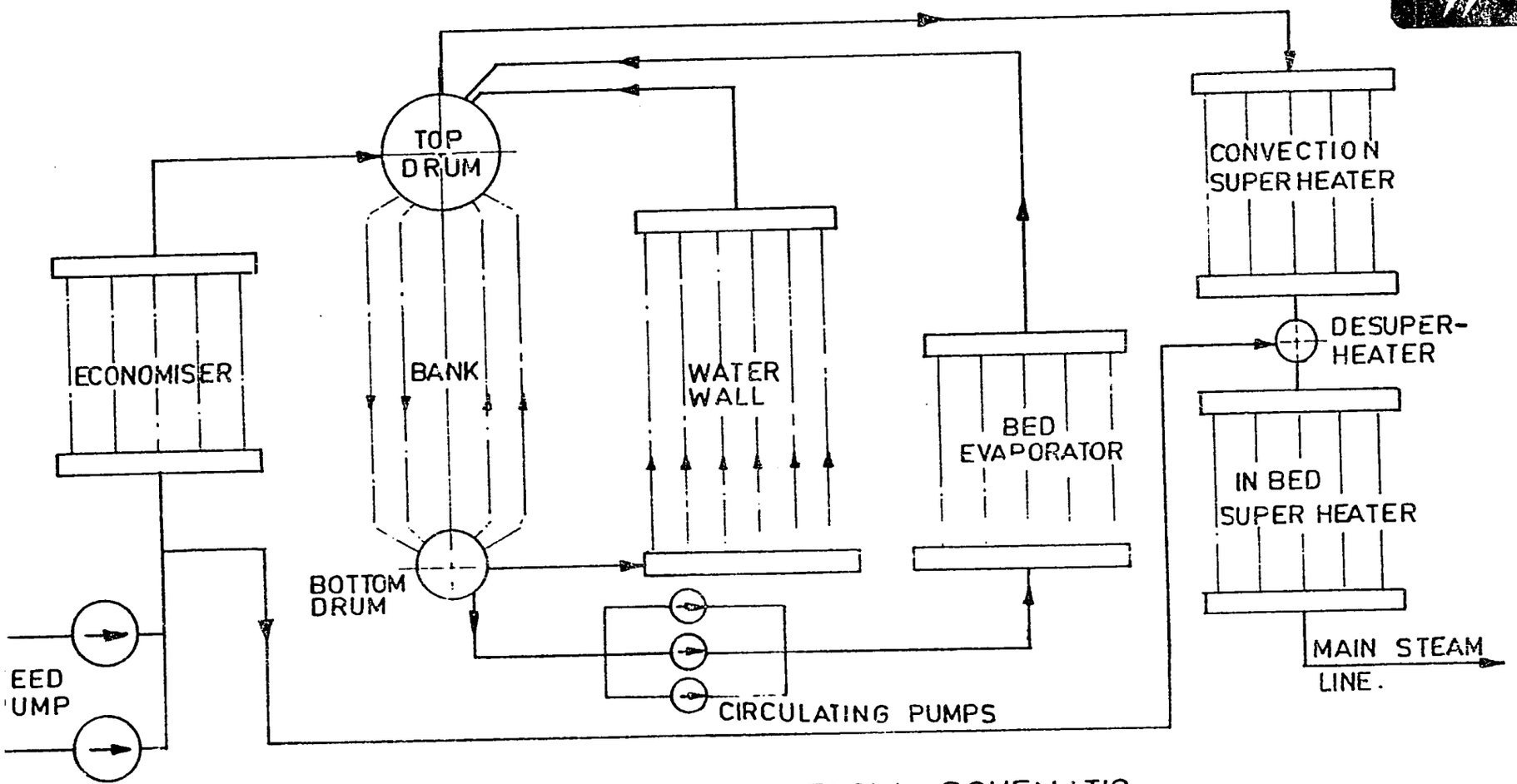

FIG-2 WATER AND STEAM FLOW SCHEMATIC

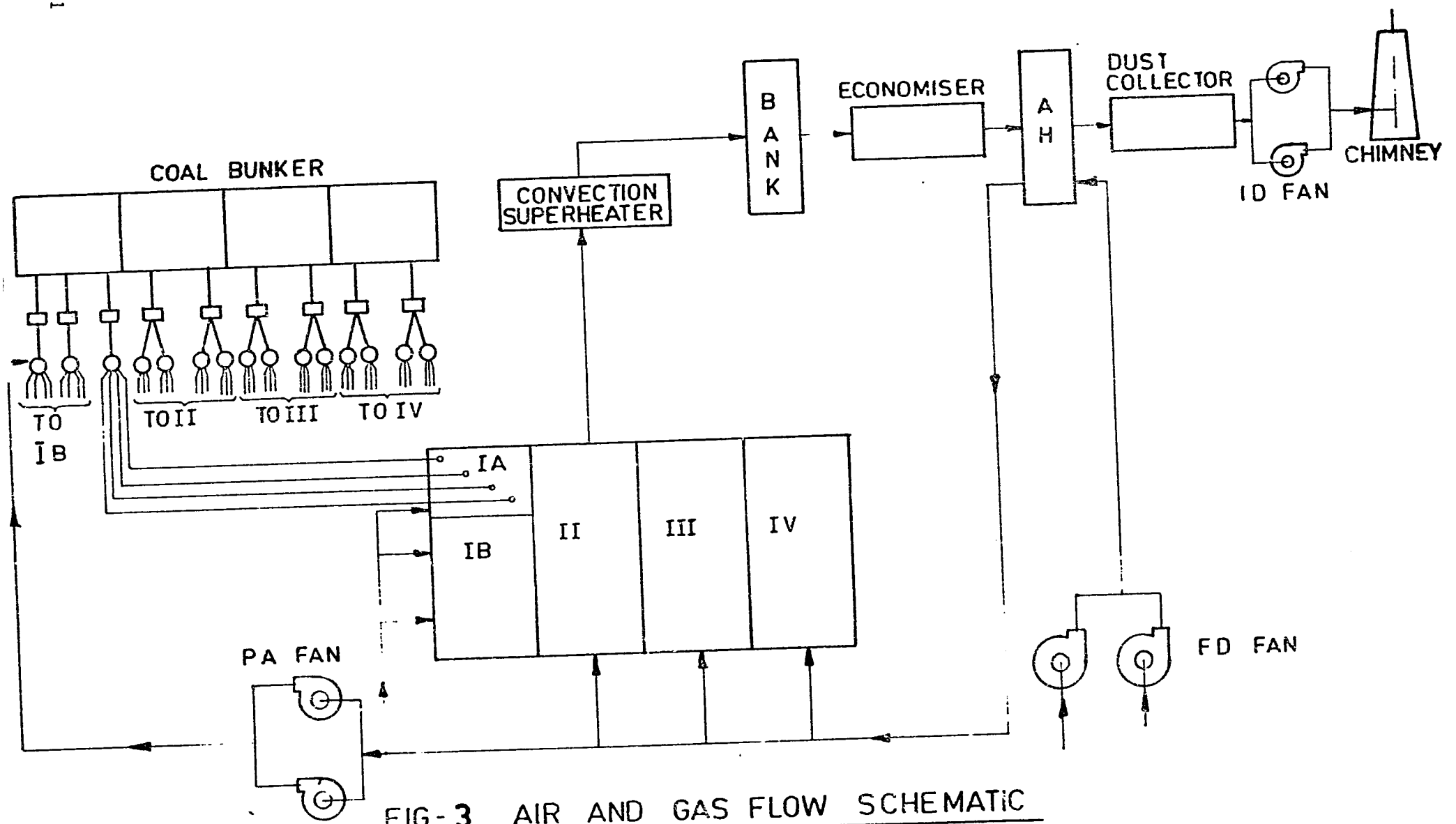

FIG-3 AIR AND GAS FLOW SCHEMATIC

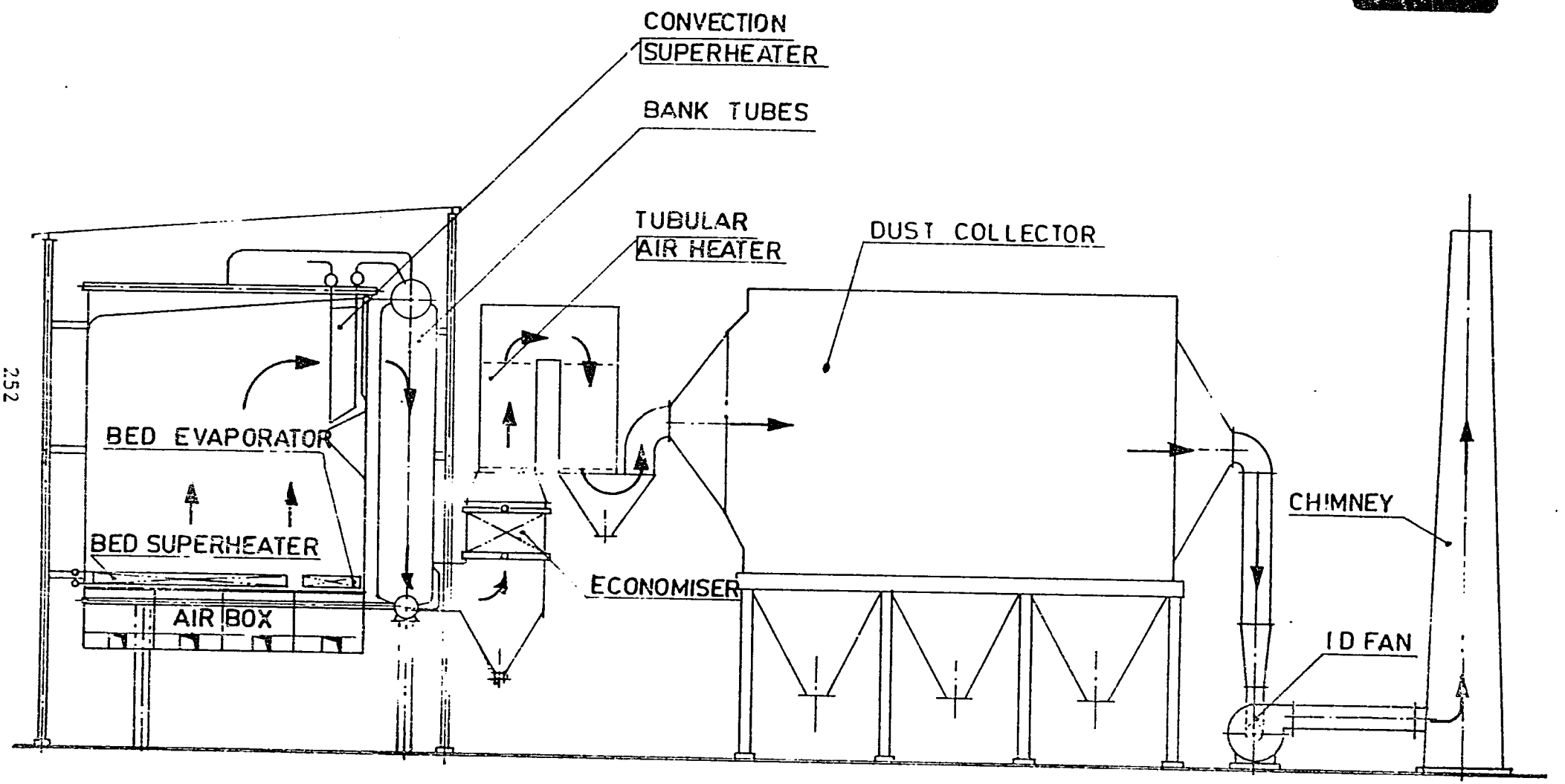

FIG-4 GAS DUCTING SYSTEM

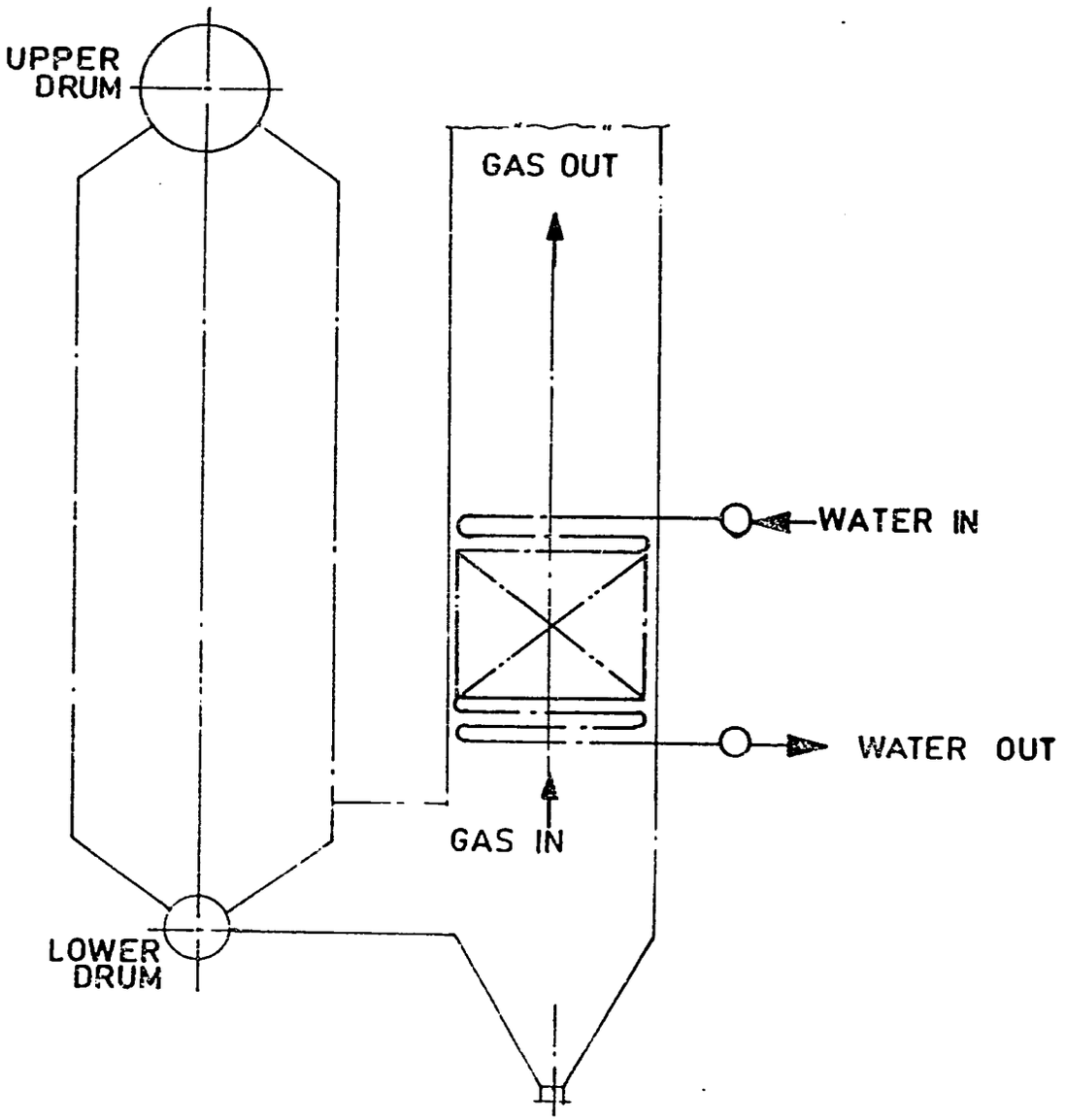

FIG - 5 ECONOMISER SYSTEM

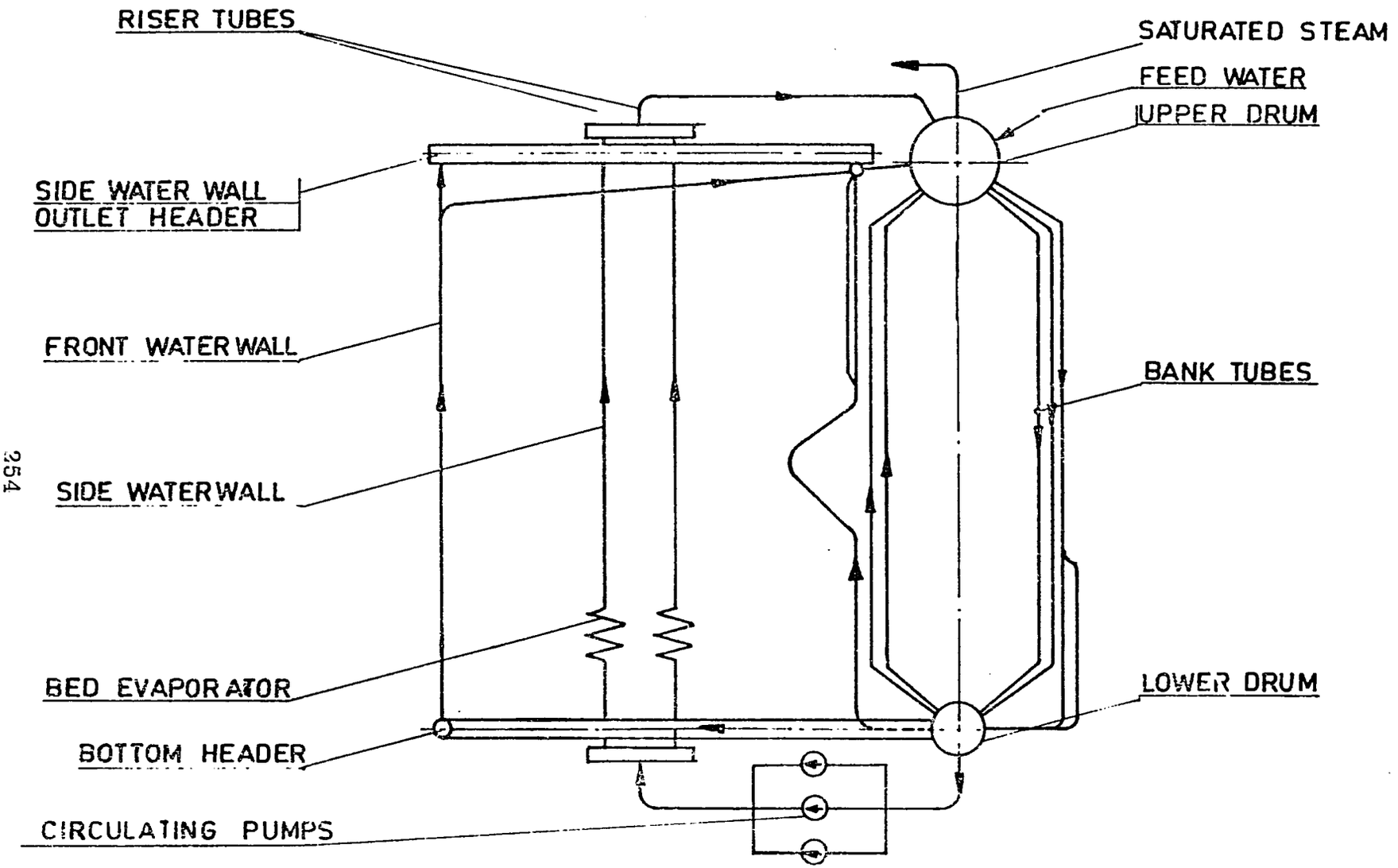

FIG. 6 CIRCULATION SYSTEM

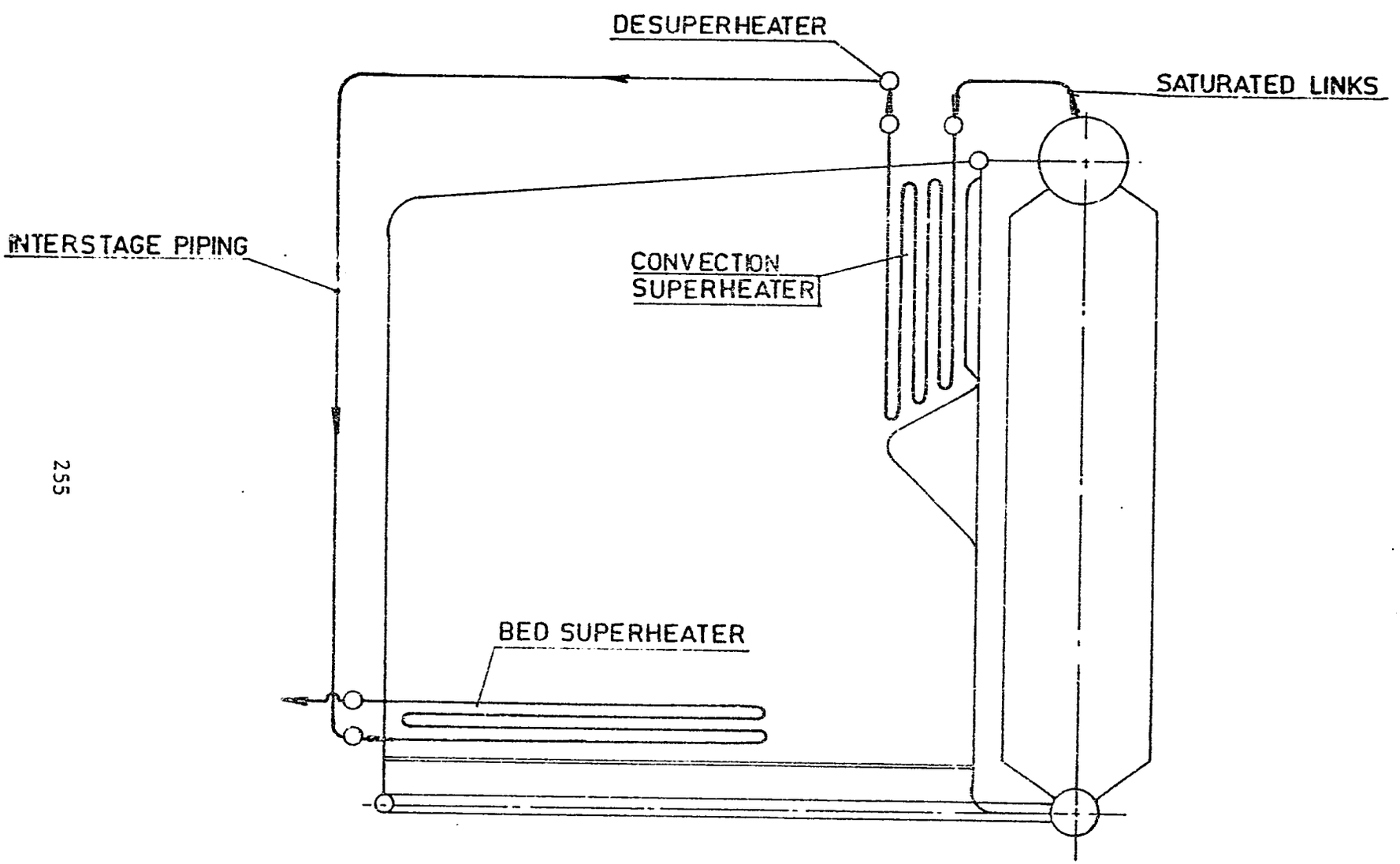

FIG.-7 SUPERHEATER SYSTEM

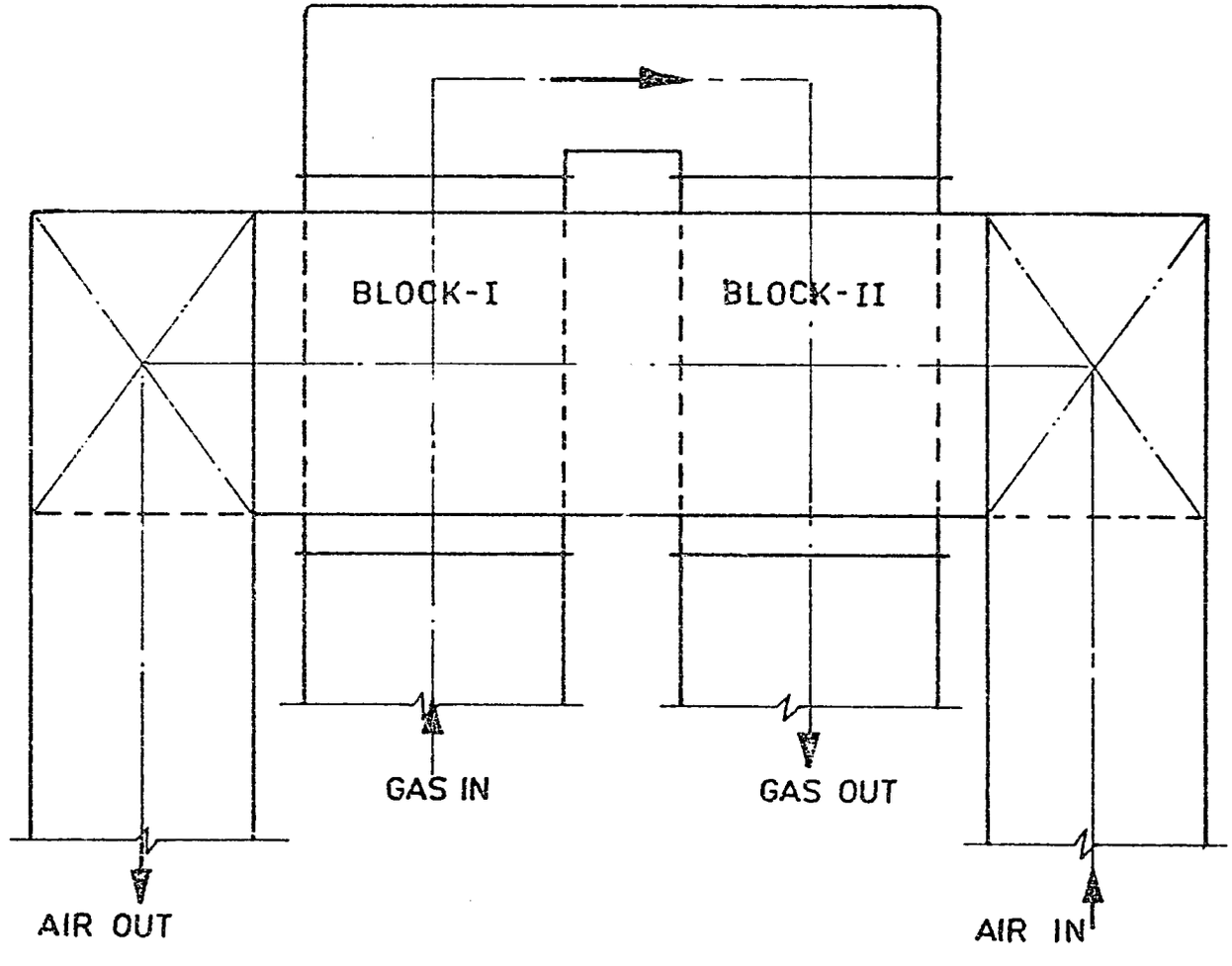

FIG-8 TUBULAR AIR HEATER ARRANGEMENT

30 MWe AFBC DEMONSTRATION PLANT

G. Viswanathan
S. Shanmugam

Industrial Power Products Division
Bharat Heavy Electricals Limited
Tiruchirapalli, India

30 MWe A F B C DEMONSTRATION PLANT

By

G. VISWANATHAN
S. SHANMUGAM

INDUSTRIAL POWER PRODUCTS DIVISION
BHARAT HEAVY ELECTRICALS LIMITED
TIRUCHIRAPALLI - INDIA.

30 MWe AFBC DEMONSTRATION PLANT

1.0 INTRODUCTION:

Atmospheric Fluidised Bed Combustion (AFBC) development was initiated in India by BHEL a decade ago. The ability to burn a wide range of fuels (Table 1) which includes coals, washery rejects of heating value 1900 Kcal/Kg, agricultural and industrial wastes in FBC boilers was demonstrated in the prototype unit at BHEL, Trichy. The reliable and efficient operation of the FBC boilers for cogeneration in industries has also been proved by the operation of a 12t/h FBC boiler in a local distillery since October '81 and another 45 t/h FBC boiler in a Polymer Plant in Vizag since October '83. Erection of a 10 MWe FBC boiler for captive power generation using washery rejects and a 60 t/h FBC boiler for cogeneration in a paper plant are underway. Table 2 lists the list of FBC installations contracted by BHEL.

In the utility sector BHEL is yet to demonstrate the application of AFBC technology The engineering design of a 30 MWe AFBC utility boiler with the auxiliary systems has been completed. Subsequently through USAID, the design has been reviewed by Tennessee Valley Authority (TVA), a pioneer in FBC utility boiler applications. As a follow-up to the joint efforts, it is now proposed to install a 30 MWe AFBC demonstration boiler with part funding from USAID, DNES, BHEL and customer. Demonstration of this technology in the utility sector would go a long way in utlising the poor quality coal abundantly avilable in India.

2.0 OBJECTIVES :

The objectives of the proposed project are to design, erect and commission a total 30 MWe AFBC utility boiler system burning high ash coals and washery rejects.

- To demonstrate the performance and reliability of FBC boiler and auxiliary systems for utility applications
- To gather engineering and performance data of the system and develop correlations for scale-up large AFBC boiler.
- To develop and establish operating control schemes required for reliable utility performance relating to variation in power demand (such as load following operations).
- To establish a data base for a range of coals, washery middlings and other waste fuels such as mill rejects.

To have this project as a training ground for operation of FBC boilers.

3.0 DESIGN DEVELOPMENT :

Based on the operating experience and data generated in the existing AFBC boilers, the design of a 30 MWe AFBC boiler was made by BHEL. This design package was reviewed by TVA under the collaborative research project 'The AFBC boiler scale up' between United States Agency for International Development (USAID) and Government of India (GOI) - DNES. Discussions were held with two TVA engineers during their visit to BHEL, Trichy in Feb '85. Their comments were finalised during the visit of the BHEL engineer to TVA in April '85. The design has been reviewed to incorporate the comments by TVA. The details of the 30 MWe AFBC design and comments by TVA are elaborated in the paper entitled "AFBC Boiler Scale-up", and is being presented in this workshop.

4.0 SELECTION OF PLANT :

In order to minimise the capital investment for the demonstration plant, an AFBC boiler 'add-on' to an existing thermal plant is only considered. There are about 20 stations in India which have TG sets of 30 MWe capacity. The boilers which were designed for good quality coals are unable to generate the rated quantity of steam with the inferior coals supplied now. By replacing the boiler in one such plant with the 30 MWe AFBC boiler all other existing systems of the plant could be utilised, thus minimising the capital investment. The coal and ash handling systems could also be adopted with minor modifications.

5.0 SYSTEMS MODIFICATIONS :

Considering space restrictions in existing plants, a precollector and bag house was adopted for dust collection instead of the electrostatic precipitators included in the scale up design. A secondary crusher to crush the coal down to 6 mm from 20 mm, a transfer tower and suitable conveying systems are added to the existing coal handling systems to make the system suitable for the AFBC boiler.

It is proposed to transport the bed drain to the existing ash handling system and to handle the fly ash seperately. The modifications proposed to the coal handling and ash handling system are based on the existing handling system in a typical plant. However, this is expected to suit other plants with minor changes. Fig. 1 shows the layout of the proposed 30 MWe AFBC boiler in a typical installation studied by BHEL, where the dust collection system is located transverse to the boiler axis and the coal bunker by the side of the boiler in order to minimise space requirement.

6.0 DEMONSTRATION PLANT EQUIPMENT :

In addition to conventional equipment included for a 30 MWe AFBC plant the following equipment/systems are proposed to be included in the demonstration plant :

6.1 Oil fired start up system :

BHEL has been adopting a semi automatic start up system using bottled liquified petroleum gas (LPG). In the 30 MWe plant, oil fired start up system is included since,

(1) the complete facilities for firing oil already available in an existing plant could be utilised and

(2) the plant would warrant separate gas storage system if LPG start up is to be adopted.

6.2 Fluidised Bed Splitters :

The 30 MW steam generator has 48 coal feed points, serving all the bed segments. In order to economise on the number of rotary air lock coal feeders that feed coal into to the different lines, a bunch of lines that feed coal to the same bed segment are served by two coal feeders with coal splitters to split the coal stream downstream of the coal feeder into the different lines. The coal splitters envisaged would work on the principle of a fluidised bed. A single spout feeds coal from the feeder into a bed of coal fluidised by air and overflow pipes located in the fluidised bed serve the purpose of splitting the single inlet stream into several outlet streams.

6.3 Distributed microprocessor based control system :

A distributed microprocessor based control system includes the following major controls.

1. Drum level control system.
2. Steam temperature control system.
3. Furnace draft control system.
4. Combustion control system.

It also does the function of data raquisition, boiler interlock logic sequencing, software to optimise boiler operation, colour CRTS and log printers.

6.4 Closed circuit furnace viewing system :

In order to monitor the free-board and the fluidised bed· a closed circuit television system consisting of one unit locally controlled television camera with a television monitor and panel is provided. The camera will view the active zones of the fluidised bed to assess the quality of the fluidisation. The freeboard zone above the fluidised bed would also be scanned periodically to analyse above bed combustion phenomena.

6.5 Gas Analysers :

Gas analysers for monitoring Co_2 and O_2 in the flue gas are proposed. The O_2 signal from this analyser is used in the combustion control loop.

6 6 Performance test Equipment :

Equipment for proving the boiler performance at site like; portable combustible-in-ash analyser, pH and conductivity meters, and coal chemical constituent analyser, facilities for data analysis, processing and reporting are also proposed.

7.0 Fuels to be tested and test programme :

A wide range of fuels ranging between medium to high ash (30 to 60% ash) coals with heating value between 4500 Kcal·Kg and 2800 Kcal/Kg would be tested in this unit. Rejects from pulveriser, washery rejects and similar waste fuels would also be tested.

In a four year schedule, testing is proposed to be carried out for one year. The programme essentially comprises shake down, combustion and heat transfer, load following and guarantee tests.

8.0 Schedule :

It is anticipated that the project would be initiated by middle of 1986 and would be extended over a period of 4 years. The major milestones would include :

1.	Mechanical Design	—	First year
2.	Manufacture of Components and Shipment	—	Second year
3.	Erection, Commissioning and shake down	—	Third year

4. Test data collection, analysis and reporting — Fourth year

Annexure-I elaborates the details of the proposed schedule.

9.0 MAN POWER REQUIREMENT :

Man power required in each category ie., engineers, technical assistants and design assistants and other supporting staff in terms of man year for excution of the project is listed below.

Category	Man year
Engineers	40
Technical Assistants & Design Assistants	118
Supporting Staff	51
Total	209

Details of man power requirement for each activity and the duration for which they are required are given in Annexure II

One project Engineer under the guidance of a programme Manager will co-ordinate the design verification by TVA engineers, equipment supply by USA and participate in the test programme and data analysis. Engineers from TVA would be involved in the mechanical design verification and project erection and commissioning and testing and data analysis stages.

10.0 FUNDING :

The total project cost is expected to Rs. 15 crores. It is anticipated that the project would be funded by USAID, GOI through DNES, the customer and BHEL. The funding from USAID would cover

- supply of non-indigenous equipment
- participation in International seminars and workshops
- inspection of USAID equipment
- training of BHEL engineers In United States and
- technical services.

The non-indigenous equipment proposed in USAID's scope includes

- boiler water circulating pump
- bag filter with precollector

- oil fired start-up system
- closed circuit furnace viewing system
- microprocessor based control room
- fluidised bed splitters
- bed ash removal system
- gas analysers
- sensing elements and controlers
- water level gauges

BHEL portion of the funding for this project includes expenditure towards

- Design of the steam generator and auxiliaries
- manufacture, procurement, project co-ordination, erection and commissioning of the unit.
- Testing, data analysis and reporting
- Travel to US to attend Seminars. inspection and training on USAID equipment.

Customer :

The customer's share cf the project cost would be towards

- material and equipment rhat make up the steam generator auxiliaries
- modifications to coal and ash handling system, civil and electricals.
- supply of utilities like air, water, coal. etc.

GOI/DNES :

The Government of India has been approached through DNES for participation in this project and it is expected that they would contribute a sizeable portion.

11.0 Coclusion :

A 30 MWe AFBC demonstration plant can be installed in an existing power plant with minimum capital expenditure by utilising/modifying the existing facilities. A proposal for demonstration plant has been prepared in consultation with Dr. R. P. Krishnan, ORNL specialist and submitted to USAID & GOI-DNES. Setting up and operation of such a plant will accelerate the application of AFBC technology in utility sactor.

12.0 Acknowledgement :

The authors thank the management of Bharat Heavy Electricals Limited for granting permission to present this paper in this Workshop.

ANNEXURE 1

PROJECT SCHEDULE

S. No.	Activity	TIME PERIOD - MONTHS															
		3	6	9	12	15	18	21	24	27	30	33	36	39	42	45	48
1.	Engineering	.....															
2.	Production of components			.....													
3.	Erection						.....										
4.	Commissioning										.....						
5.	Testing, Data Analysis, reporting												.....				

ANNEXURE–II

MANPOWER REQUIREMENT

Sl. No.	Activity	Category	No. Reqd	Duration Yrs. for which required	Man years
1.	Engineering the system which includes performance engineering, detailed design of components, preparation of manufacturing drgs., drawing out specifications for equipment and materials, preparing O&M manual, supervision of erection and commissioning, testing and analysis etc.,	Engineers	10	4	40
		Design Assistants	12	4	48
		Tech. Assistents	12	4	48
2.	Follow-up of fabrication of components	Chargeman	3	3	6
3.	Procurement	Purchase Asst.	1	2	2
		Accountant	1	4	4
4.	Receipt and despatch	Store keepers	2	1.5	3
		Clerks	2	1.5	3
5.	Erection	Skilled workers	6	1	6
		Unskilled workers	6	1	6
		Security Guards	3	1	3

ANNEXURE–II

MANPOWER REQUIREMENT

Sl. No.	Activity	Category	No. Reqd	Duration Yrs. for which required	Man years
5.	Commissioning and testing	Blr. Operators	4	2	8
		Research Asst.	4	2	8
		Skilled workers	6	2	12
		Unskilled Workers	6	2	12

TABLE-1

FUELS TESTED

COALS	Moisture %	Ash %	HHV Kcal/Kg
Singareni	7	26	4300
Chanda	5	36	4300
Bellampalli	6	55	2460
Assam high sulphur coal (2.2% S)	9	33	7100
MIDDLINGS/REJECTS			
Bhojudih	1	55	3100
Kathara	1	73	1900
Jamadoba	1	65	2100
Mill rejects	1.45	57.33	3300
Neyveli lignite	56	3	2800
Leco fines	1	14	6700
Furnace oil	–	–	10500
Coal water slurry	50	12	2400
INDUSTRIAL WASTES			
Spent liquor from viscose plant	4	46	2400

TABLE 1

FUELS TESTED

COALS	Moisture %	Ash %	HHV Kcal/Kg
Sludge from distillery	13.1	36.4	2420
Solvent residue	–	–	–
Spent bagasse	55.0	11.1	1840
Paper sludge	5.5	26.7	3372
AGRICULTURAL WASTES			
Rice husk	4	17	3000
Rice straw	9.4	14.6	3310
Wood chips	6.98	0.5	4295
Ground nut shell	6.59	4.79	4180
Saw dust	4.9	5.0	6471
Bagasse	50	1.3	2058

TABLE-2

FBC INSTALLATIONS

NO.	Customer	Steam flow	Fuel	Status
1.	Trichy Distilleries	12 t/h	Coal-40% Ash	In operation Since Oct. 81 Logged 20000 hrs
2.	Hindustan Polymers	45 t/h	Coal-50% Ash	In operation Since Oct. 83 Logged 10000 hrs
3.	West Coast Paper Mills	60 t/h	Coal-43% Ash	Commissioning in Feb 86
4.	Tata Iron & Steel Co	56 t/h	Washery Reject 65% Ash	Commissioning in April 86
5.	Baroda Rayons	50 t/h	Coal–45% Ash	Commissioning in April 87
	HOT GAS GENERATOR			
6.	Dalmia Cements–Hot Gas Generator	7 m Kcal/h	Coal-39% Ash	In operation since Dec. 83 Logged over 1000 hrs
7.	Pamani Fertilizer Hot gas Generator	0.8 m Kcal/h	Rice Husk	Commissioning Shortly
	CONVERSIONS			
8.	Shree vindhya Paper Mills	15 t/h	Oil to coal 36% Ash	Commissioning Shortly
9.	Simbhaoli Sugars	20 t/h	Bagasse Stoker to FBC	Commissioning Shortly

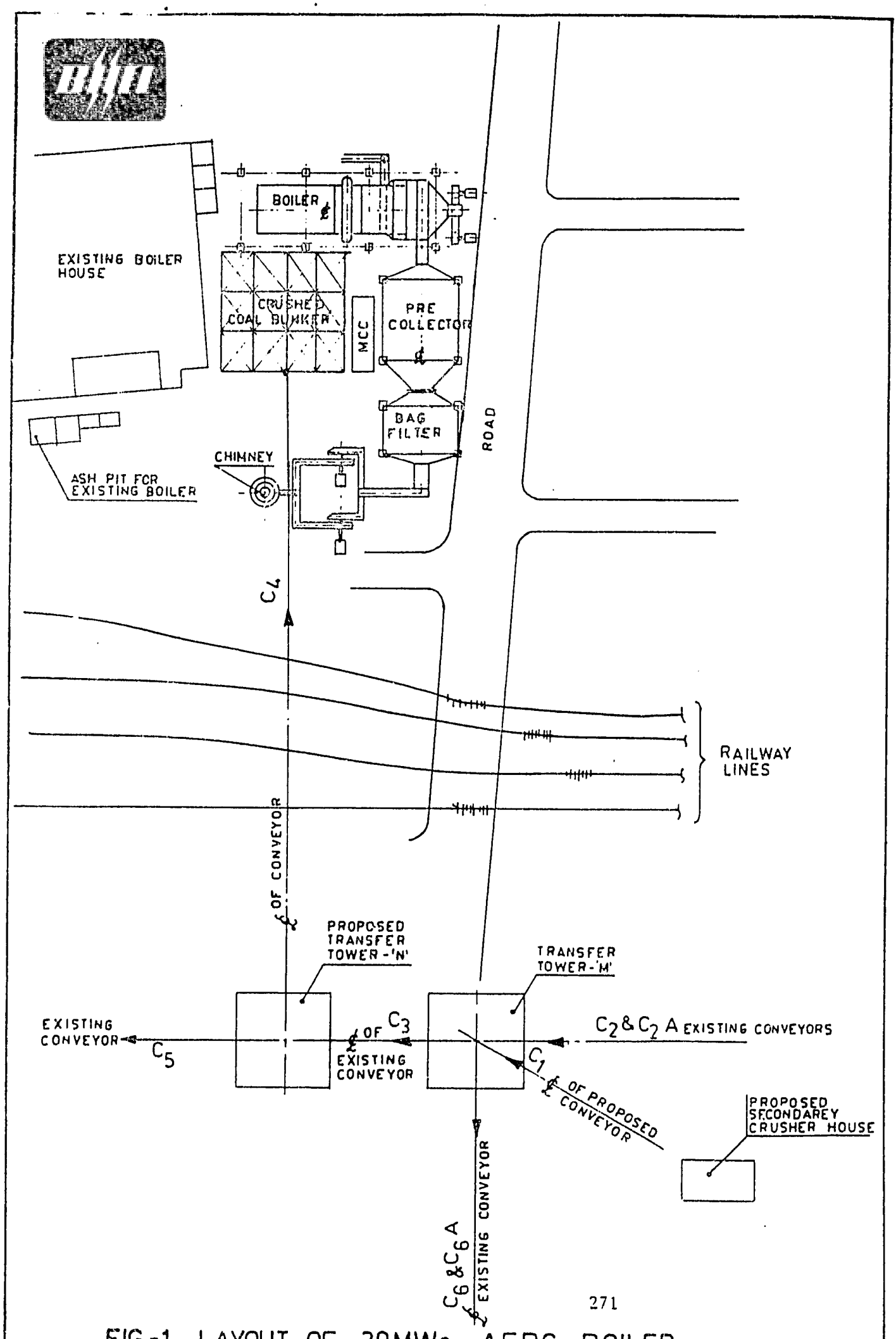

FIG-1 LAYOUT OF 30MWe AFBC BOILER

STUDIES ON STABILITY AND FLOWABILITY OF COAL-WATER MIXTURE (CWM) FUEL

M. Chakraborty
T.K. Bhowmik
Mithilesh Prasad
S. Chanda
S. Majumdar

Central Fuel Research Institute
(Council of Scientific and Industrial Research)
Dhanbad, India

STUDIES ON STABILITY AND FLOWABILITY OF COAL-WATER MIXTURE (CWM) FUEL

M.Chakraborty, T.K.Bhowmik, Mithilesh Prasad,
S.Chanda and S.Majumdar

Central Fuel Research Institute
(Council of Scientific and Industrial Research)
Post-F.R.I.,PIN:828 108,Dhanbad,
INDIA

STUDIES ON STABILITY AND FLOWABILITY OF COAL-WATER MIXTURE (CWM) FUEL

M.Chakraborty, T.K.Bhowmik, Mithilesh Prasad, S.K.Chanda and S.Majumdar
Central Fuel Research Institute, Post-F.R.I.-828 108, India.

SUMMARY

The stability, flowability and softness of pack of settled mass of a 60% coal-water mixture (CWM) fuel prepared with Samla seam (Raniganj field) coal, were determined under preset standard conditions. The effects of particle size and three additive systems, viz., Celex (Magnesium lignosulphonate), Lomar D (Sodium salt of alkyl naphthalene sulphonic acid) and CDS (a coal-derived stabilizer), were investigated. It was observed that the bimodal distribution of particle size with particular proportion of coarse and fines (60:40), gave maximum flowability.

The characteristics of CWM were largely dependent on both type and concentration of additives, and there was an optimum concentration specific for each system, for Celex and Lomar D the optimum concentrations under the experimental conditions being around 1.75 and 0.15% of CWM, respectively. The stability and flowability of CWM were relatively poor with Celex alone, whereas these properties were remarkably improved when 2.5% of coal was replaced with CDS. As determined by rod penetration tests, this system also gave very soft pack of settled mass which could be easily repulped. Predominant lyophilic characteristics of CDS might have resulted in better flowability through the formation of hydration sheath around the particles in CWM. Further investgations on these aspects are in progress.

---- xxxx ----

STUDIES ON STABILITY AND FLOWABILITY OF COAL-WATER MIXTURE (CWM) FUEL

INTRODUCTION

Coal being in solid form poses problem in its use in many fields. It is however possible to convert coal to liquid fuels structurally identical to petroleum-based products and this liquefaction of coal to high grade clean transportable fuel would obviously be the ideal solution. But the process though largely known, involves hydrogenation under severe conditions, considerable investment and environmental factors.

One of the low-cost alternatives is to make coal behave like liquid by suspending the same in a carrier liquid like water. The coal-water mixture (CWM) fuel has the physical form of a homogenous heavy liquid, can be stored, transported, sprayed and burned like liquid fuels. CWM when prepared with low-ash coal, is a potential substitute for fuel oil.

The calorific value of CWM is directly proportional to the concentration of coal, and primary objective is to increase the same as much as possible maintaining the stability and flowability within acceptable limits. In case of ordinary coal-water slurry, the flowability or fluidity (inverse of viscosity) usually steeply increases as the coal concentration exceeds 50%. This kind of slurry is coarse, unstable and cannot be used without dewatering and drying in conventional boilers. CWM on the other hand, is concentrated containing generally around 70 % coal, can be used directly with many advantages of liquid fuel.

The main problem in preparing CWM is to ensure desired

sedimentation or Stokes' stability and flowability of the mixture. These properties, being function of type of coal, particle size distribution, type and concentration of additives, are largely case-specific.

The results of this study report the effect of process parameters of CWM on these properties which mainly determine its applicability as liquid fuel.

THEORETICAL CONSIDERATIONS

The theory and mechanism of dispersion of solid in liquid are complex and involve principles of surface and colloid chemistry, and of rheology. The flowability of a solid liquid slurry is relatively lower as the presence of particles in a flowing liquid results in dissipiation of energy which would otherwise keep the carrier fluid flowing had there been no solid. In addition to this factor, the attractive forces as a result of vander Waals inter-molecular forces tend to cause agglomeration of particles entraping the carrier liquid and lead to looser packings of particles, higher solid-solid interaction and lower flowability.

The viscosity of a fluid is inversely proportional to flowability and for concentrated suspension, it is given by

$$\mu_r = \left[1 + K\left(\frac{\phi/\phi_m}{1-\phi/\phi_m}\right)\right]^2 \quad \text{-----} \quad (1)$$

where, μ_r = relative viscosity

ϕ = volume fraction of particles

ϕ_m = maximum attainable solids volume fraction in the particular suspension

K = constant for the particular suspension

In our previous presentation this equation was discussed in detail and used to correlate the experimental results(1,2,3). It is apparent from the correlation that the relative viscosity of suspension is a function of the reduced volume concentrations, i.e., ϕ/ϕ_m . The viscosity is reduced when this ratio is lowered, and obvious approach in realising this for a given volume fraction of particles, ϕ , is to increase the maximum attainable solids volume fraction, ϕ_m . This can be achieved through a number of ways. One of them is to have an optimum particle size distribution to give maximum packing volume fraction. Also, ϕ_m would increase as a result of repulsive forces of interaction either due to i) electrical double layer, or ii) steric factor, or iii) solvation layer. If the interaction is predominantly repulsive, the particles can slip past one another and produce a denser packing of dry solid spheres. However, if there is an attraction between the particles, weak or strong, the particles would stick to each other at random points and yield looser packing with some water unavailable for giving desired fluidity.

The repulsive forces between the particles depend on the surface charge which in turn very much depend on the type of coal and additives used. In other words, when the particles have high surface charg they are well dispersed, viscosity is generally low, hence flowability is high and rheology approaches Newtonian or Bingham plastic behaviour. But under low viscosity condition, in

certain cases, the sadimentation stability is poor (4). Low surface charge may cause attraction between the particles and consequently enhanced flocculation leading to high viscosity and poor flowability but better stability. The key is to make an acceptable compromise between good flowability and stability by suitable adjustment of surface charge along with appropriate particle size consist.

The colloidal fraction in the particle size distribution along with stabilizing agents may result in some sort of gel formation which usually augments the yield stress and hence Stokes stability. It was observed that syneretic stability which is affected due to slow decrease in interparticle separation distance owing to molecular attractions, is difficult to achieve(5). The water expelled from interparticle space gradually appear as supernatant liquid. In presence of specific type and concentration of stabilizer, the slurry however condenses to a very soft pack which can easily be repulped into an apparently homogeneous mixture by the application of minimum shear forces.

In the context of this background, the experimental investigations in this study were organised and conducted with a view to achieving stability and flowability of CWM fuels.

EXPERIMENTAL

The experiments were conducted to determine the following characteristics of CWM:

i) Stability

ii) Flowability

iii) Softness of pack of the settled mass,

and effect of process parameters, viz., concentration and particle

size distribution of coal, type and concentration of additives on these properties.

Materials and equipment used

Run-of-mine coal of Samla seam (Raniganj field) was used for making CWM. The ash content and calorific value of the coal sample, on as received basis, were 14.0 and 6350.0 Kcal/kg, respectively. Coal sample ground to particle size 90% below 300 mesh ,i.e.,50 microns was used in most of the experiments.

The additive systems used were celex (magnesium ligno-sulphonat - an anionic surfactant supplied by Indian Paper Pulpe Company,Calcutta), Lomar D (sodium salt of alkyl naphthalene sulphonate, also an anionic surfactant and a product of Diamond Shamrock Corporation,Morristown,U.S.A.), and CDS (coal-derived stabilizer processed in this laboratory).

Water used for the preparation of slurry was obtained from the central supply available at the laboratory.

Apart from the pulverizer, laboratory scale glass apparatus were used in the experimental work.

Procedure

CWM slurries were prepared in plastic jars by slowly adding pulverized coal to water containing requisite quantity of additives under constant stirring. These were also added to the mixture separately, if needed. The mixtures were stirred for 15 minutes for uniform wetting and homogenisation. Concentration of coal in most of the CWM samples was 60% w/w.

For quantitive measurement of the properties of CWM, simple apparatus and systems were devised, experimental conditions fixed and standardised.

Stability was determined from the extent of settling after prefixed time, and expressed as concentration of coal in upper half of CWM with respect to the initial concentration of CWM system taken in a measuring cylinder under standard condition. The sample from the cylinder was carefully taken out with a specially fabricated spoon-like spatula with minimum possible disturbance to the remaining part of CWM. The stability was calculated as follows:

$$\text{Stability, \%} = \frac{\text{Concn. of coal in CWM (in upper half of cylinder) after prefixed time}}{\text{Initial concn. of coal in CWM}} \times 100$$

The concentration of coal was determined gravimetrically by drying the CWM sample in a standard oven.

The flowability of CWM slurry was measured by the time required to flow out from a cylindrical vessel. It was expressed in seconds. The lower value of time indicated better flow characteristics.

The softness of pack of the settled mass gives an indication of its repulpability. It was measured by usual rod penetration test (6), and calculated as follows:

$$\text{Softness of Pack} = \frac{\text{Length of the standard rod penetrated} \times 100}{\text{Total length of CWM column}}$$

100% softness of pack of the settled mass indicated that the solid

particles did not settle to a compact cake and it could be repulped relatively easily by applying minimum of shear force.

RESULTS AND DISCUSSION

Effect of coal concentration

Three sets of experiments at three concentrations of coal, viz., 57.2, 60.0 and 64.0 % in CWM, using celex in first two and Lomar D in other series of experiments, were conducted. The stability was recorded consecutively for 4 days for each sample. The results of the effect of coal concentrations on stability along with experimental conditions are shown in Fig.1. It can be seen that the stability was as usual increased with the increase in concentration of coal. As viscosity augments under that condition, the stokes stability is improved and for the same reason flowability sharply deteriorated. The results of flowability tests of these series of experiments could not however be completed and presented here.

Effect of particle size consist

The effect of particle size consist on stability and flowability was studied with CWM containing 57.0% coal and 1.5% celex. Two sets of experiments were carried out - in the first series the proportion of fine particles having size range below 50 microns (-300mesh) was stepwise increased in a coarser fraction size between 75 - 150 microns (200-100 mesh). In the second series, particle size lower than 75 microns was blended in place of 50 microns as in first series. Mixing of [illegible] distinctly different size fractions was done in order to ens[illegible] bimodal distribution. The results of these experiments are shown in Figs.2 and 3. The

packing densities of the different size consists are also incorporated . It can be seen that maximum flowability, i.e., minimum flow time of about 40 seconds was required when the proportion of finer particles in the blend was around 40%, in both cases. It is interesting to observe that the packing densities were also maximum for the corresponding size consists. The results to an extent confirm the observation made in regard to the theoretical correlation (equn.1) suggesting that densed packing of dry particles would have lower viscosity and better fluidity.

Finer particles are likely to occupy interparticle spaces leading to dense packing. The flow of slurry may be regarded as motion of larger particles over one another as being "lubricated" by the motion of smaller particles in the interstices. In other words the results show that bimodal mixture of particles give denser packing and better flowability. It may hence be possible to achieve further improvement in fluidity by using optimum multicomponent distribution of particle size (7,8).

It may also be seen in Figures 2 and 3 that although th stability ,measured after first 24 hours, was improved with the increase in finer fraction, the stability for the optimum size consist (fine to coarse particles ratio , 40:60) was only about 4% less than the value obtained with 100% finer particle size. Thus, the results clearly indicate that the optimum size consist significantly improves fluidity with little sacrifice of stokes stability in CWM system.

Effect of type and concentrations of additives

In these series of experiments, the concentration of coal in CWM was 60%. The results of the three series of experiments conducted with three different additive systems, viz., Celex, Lomar D and coal derived stabilizer (CDS) to establish their effects on stability, flowability and softness of pack, are shown in Figs.4,5 and 6.The change in these properties were recorded at various concentrations of additives. The stability and softness of pack by rod penetration test were performed after 24 hours. It can be observed from the results that there was a specific concentration for each additive for optimum stability and flowability. The additives being high molecular compounds with functional groups, might, beyond the optimum point, tend to alter the structure of the solid-liquid system which probably affect both stability and flowability

For the particular coal-water system, the optimum concentration of Celex was found to be 2.0% of the mixture. The stability and flowability at that point were 95.4% and 75 seconds, respectively. In case of Lomar D, the situation was complex (Fig.5). The flowability was maximum at about 0.15 % Lomar D, and the fluidity did not change with further increase in concentration. At this point stability and softness of pack were also reasonably high, both being about 96%. The optimum concentration range was however very narrow in this region and strict process control would be required to maintain this concentration in continuous bulk preparation of CWM. The same effect was again obtained when the

concentration of Lomar D was increased more than 10 times to about 2.0%. All the three properties were not optimum at any other concentrations.

Fig.6 shows that in CWM with1.75% Celex, the replacement of coal by 2.5% of CDS results in remarkable improvement in flowability. Although stability remained almost same (about 95%), the softness of pack of settled mass was almost 100% indicating that it was not compact and could be repulped easily.It was observed that there was a tendency to form a gel-like structure with the incorporation of CDS in the mixture. CDS in view of its predominant lyophilic characteristics might have helped in forming a hydration sheath around the particles resulting in a soft pack and better flowability. When coal was replaced by CDS to the extent of 2.5% in a CWM with Lomar D (0.15%), same results i.e., improvement in softness of pack of settled mass was observed. The results are however not presented here. The clorific value of CDS is almost same as that of typical non-coking coal and replacement of coal by 2.5% of CDS would not practically affect the intrinsic energy of CWM. Further investigations in this area are being continued.

CONCLUSION

Although the experimental devices and procedure adopted in this study were simple, the following conclusions can nevertheless be made from the results:

- In general, stability is improved (fluidity reduced) with the increase in concentration of coal in CWM.

- Particular mix of finer and coarser fractions of particle size of coal where the packing density is maximum, gives maximum fluidity and high stability.
- There is an optimum concentration specific for each additive for maximum flowability and stability.
- The flowability and softness of pack of settled mass is improved by replacing 2.5% of coal with a coal-derived stabilizer (CDS) under the condition of the particular system investigated.

ACKNOWLEDGEMENT

The authors are grateful to US AID authorities and Director, CFR for support and interest in this work.

REFERENCES

1. Chakraborty, M.
"Coal-Water Mixture Fuel and Preliminary Studies on its Rheological Characteristics", Proceedings of the Second USAID/GOI Workshop on Alternative Energy Resources and Development: Coal Conversion and Biomass Conversion, New Delhi, February 4-7, 1985.

2. Botsaris, G.D. and Astill, K.N.
"Effect of the Interaction between particles on the Viscosity of Coal Water Slurries", Proceedings of Sixth International Symposium on Coal Slurry Combustion and Technology, Orlando, June 25-27, 1984.

3. Frankel, N.A. and Acrivos, A.
Chem. Engg. Sci., 22, 847 (1967).

4. Cassassa, E.Z., Parfitt, G.D., Rao, A.S. and Toor, E.W.
"The Effect of Surface Active Agents on Coal/Water Slurry Stability", Proceedings of Sixth International Symposium on Coal Slurry Combustion and Technology, Orlando, June 25-27, 1984.

5. Funk, J.E., Dinger, D.R., Funk (Jr), J.E., Funk, D.F., Vecci, S.J. Farthing (Jr), G.A. and Johnson, S.A.
"Combustion Tests of a High Solids Coal Water Fuel - Co-Al", Presented to the Governor's Conference on Expanding the Use of Coal in New York State, Albany, N.Y., May 21-22, 1981.

6. Ogura,Y., Mizuno, Y., Ushima, N. and Naka, A.
"A Study of Slurry using De-Ashed Coal", Proceedings of Sixth International Symposium on Coal Slurry Combustion and Technology, Orlando, June 25-27, 1984.

7. Henderson,C.B. and Scheffee,R.S.
"The Optimum Particle Size Distribution of Coal for Coal-Water Slurries",Preprints of Papers presented at Am.Chem. Society,Divn. of Fuel Chemistry,Seattle, Vol.28,No.2, March 20-25,1983.

8. Marvin,D.C. and Frankiewicz,C.T.
"CWS Rheology: The Role of the Coal Particles", ibid.

---- xxxx ----

Fig.1. Effect of Coal concn. on Stability

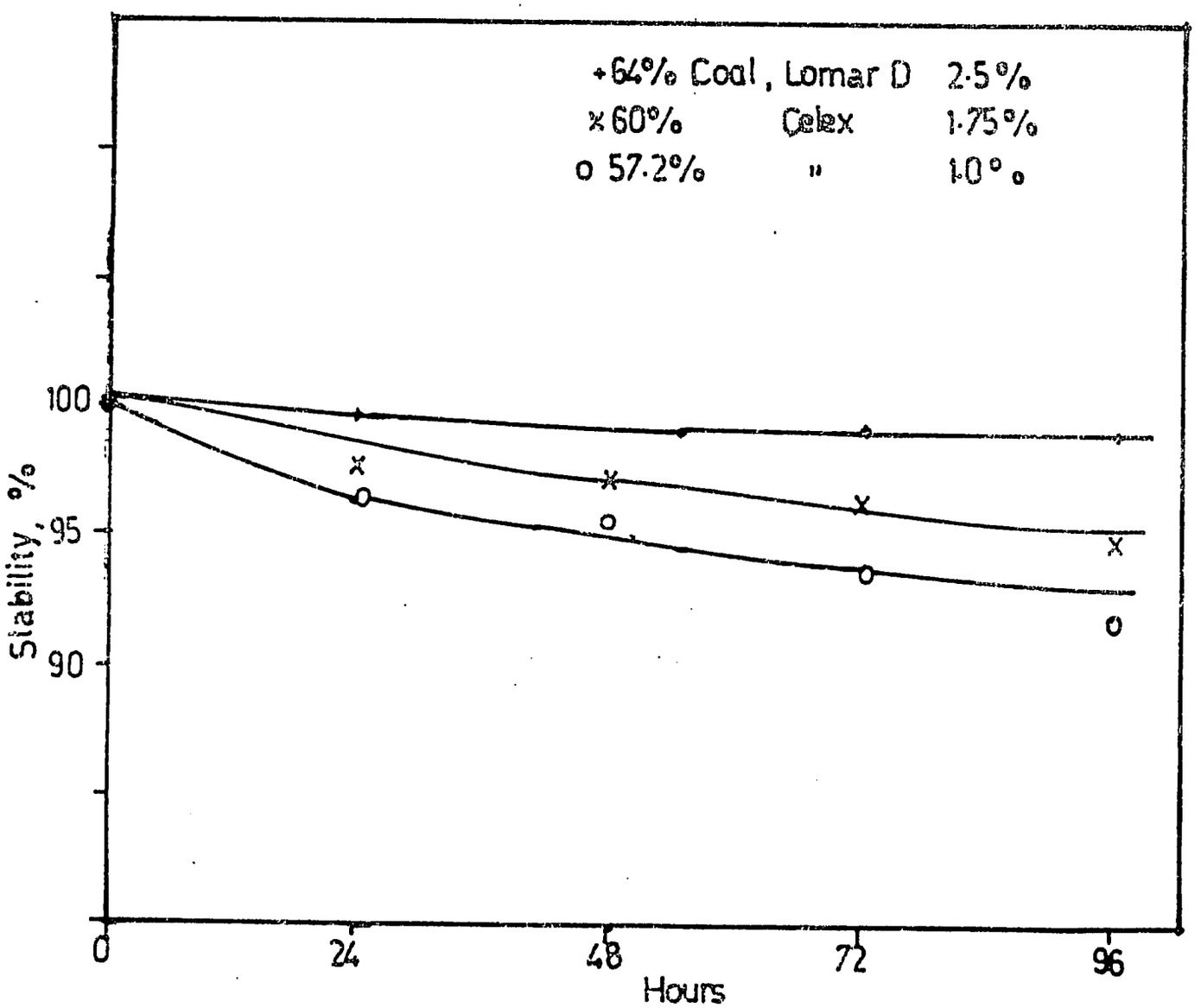

Fig.2 Effect of size consist

CWM 57%

Celex 1.5%

(Stability tests were conducted after allowing to settle for 24 hours)

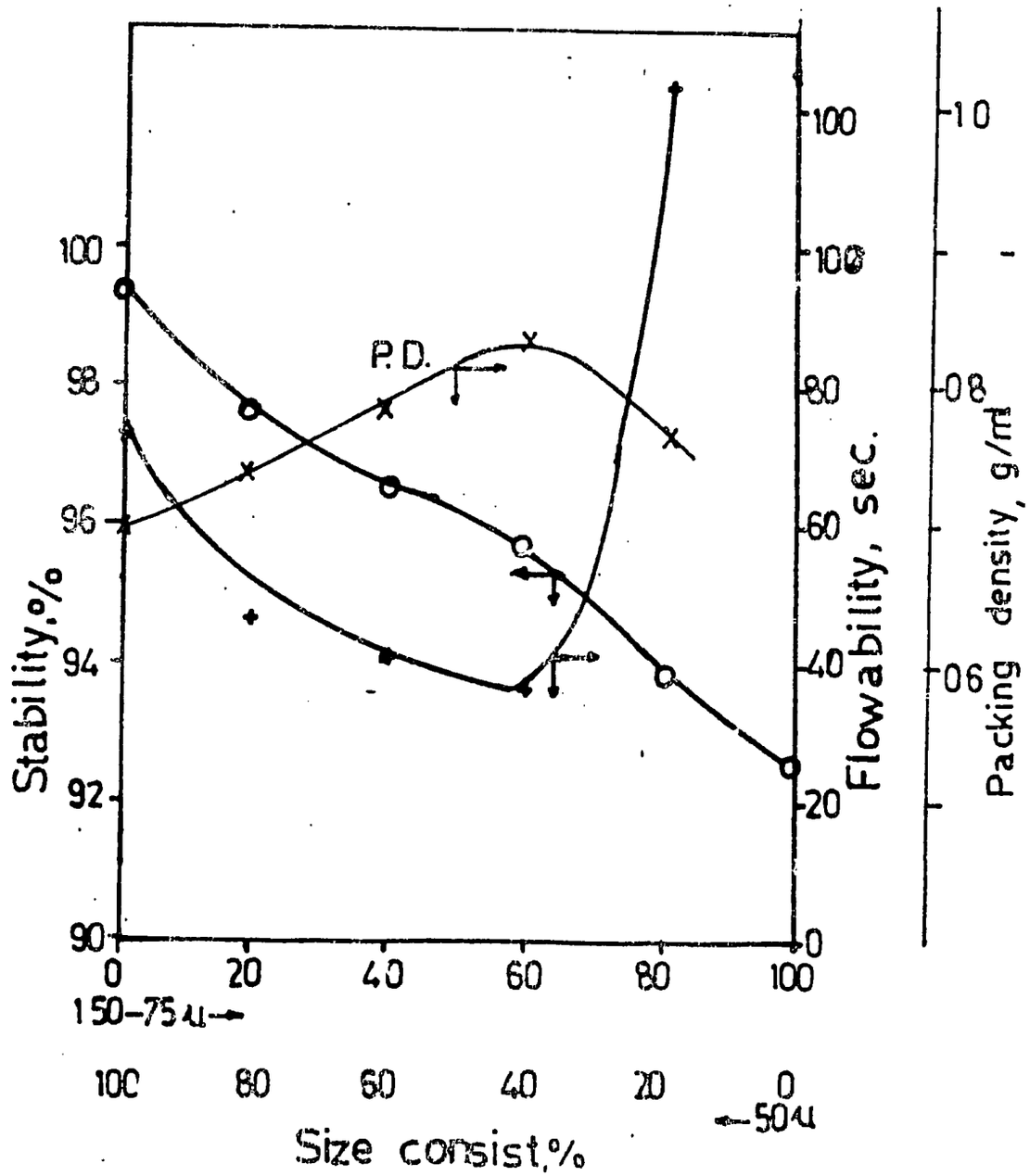

Fig. 3

Effect Of Size Consist

CWM– 57%

Celex – 1·5%

(Stability tests were conducted after allowing to settle for 24 hours)

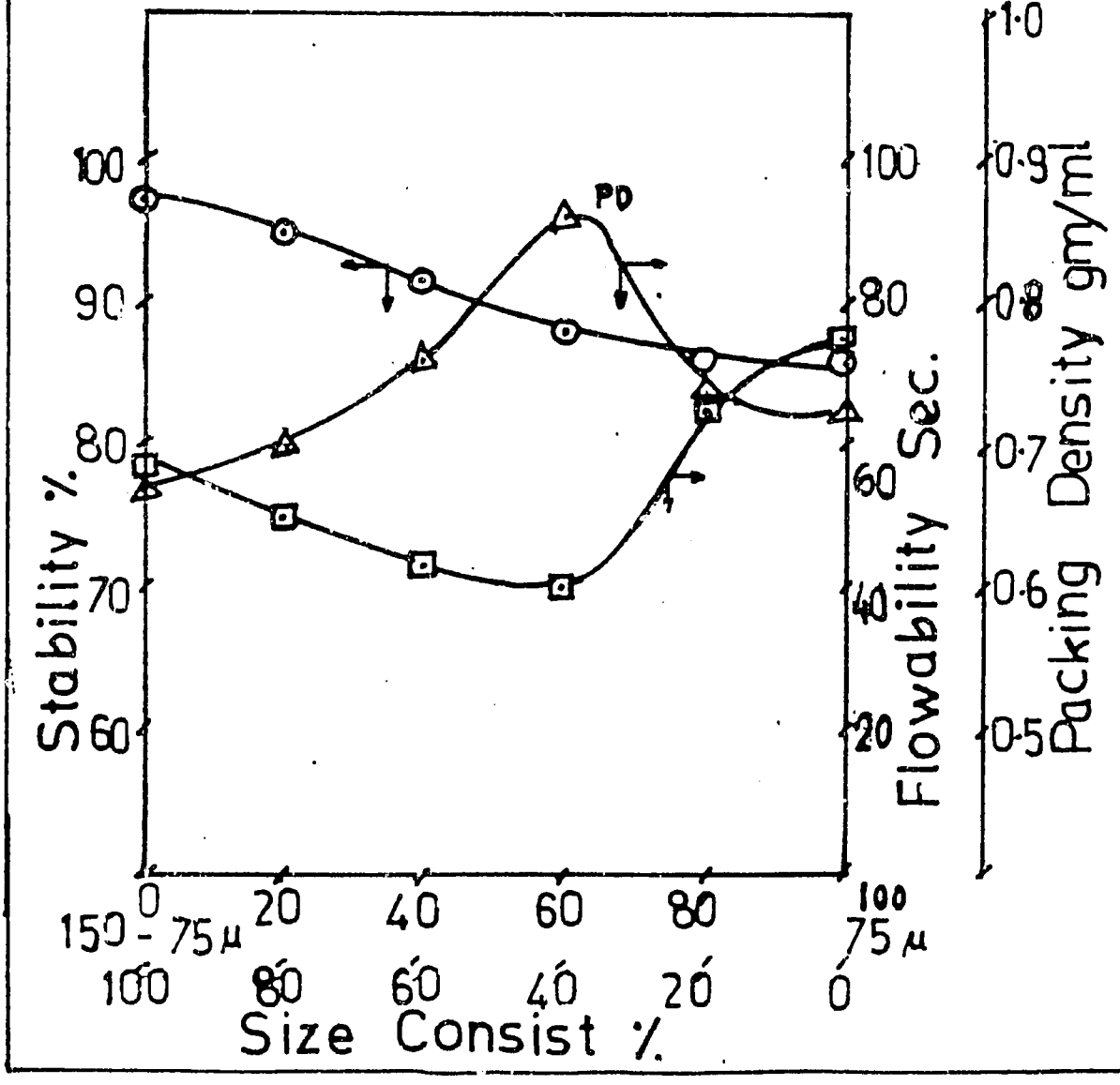

Fig.4, Effect Additive(celex) concn.

CWM - 60% Coal

(Stability tests were conducted after allowing to settle for 24 hours)

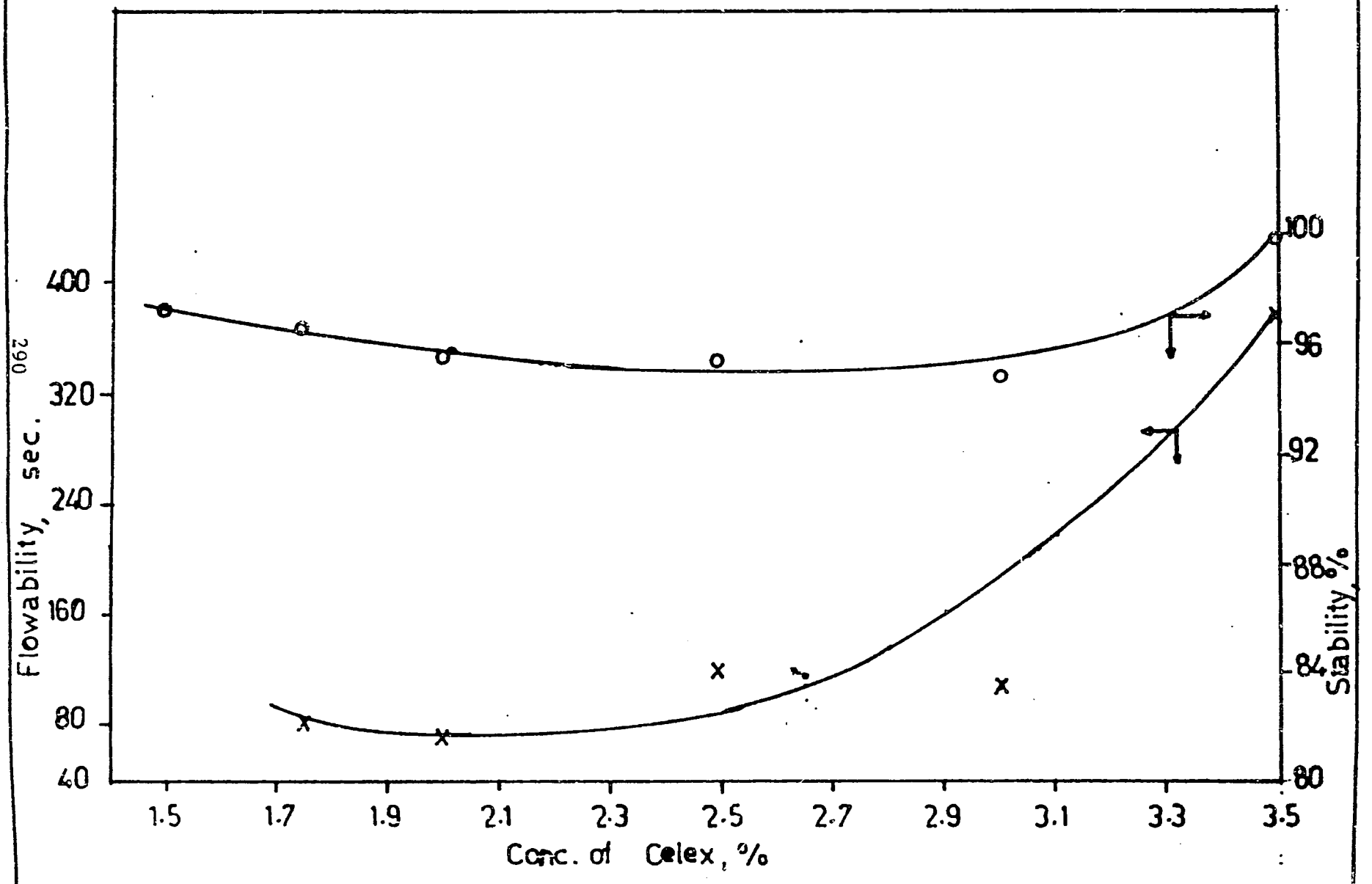

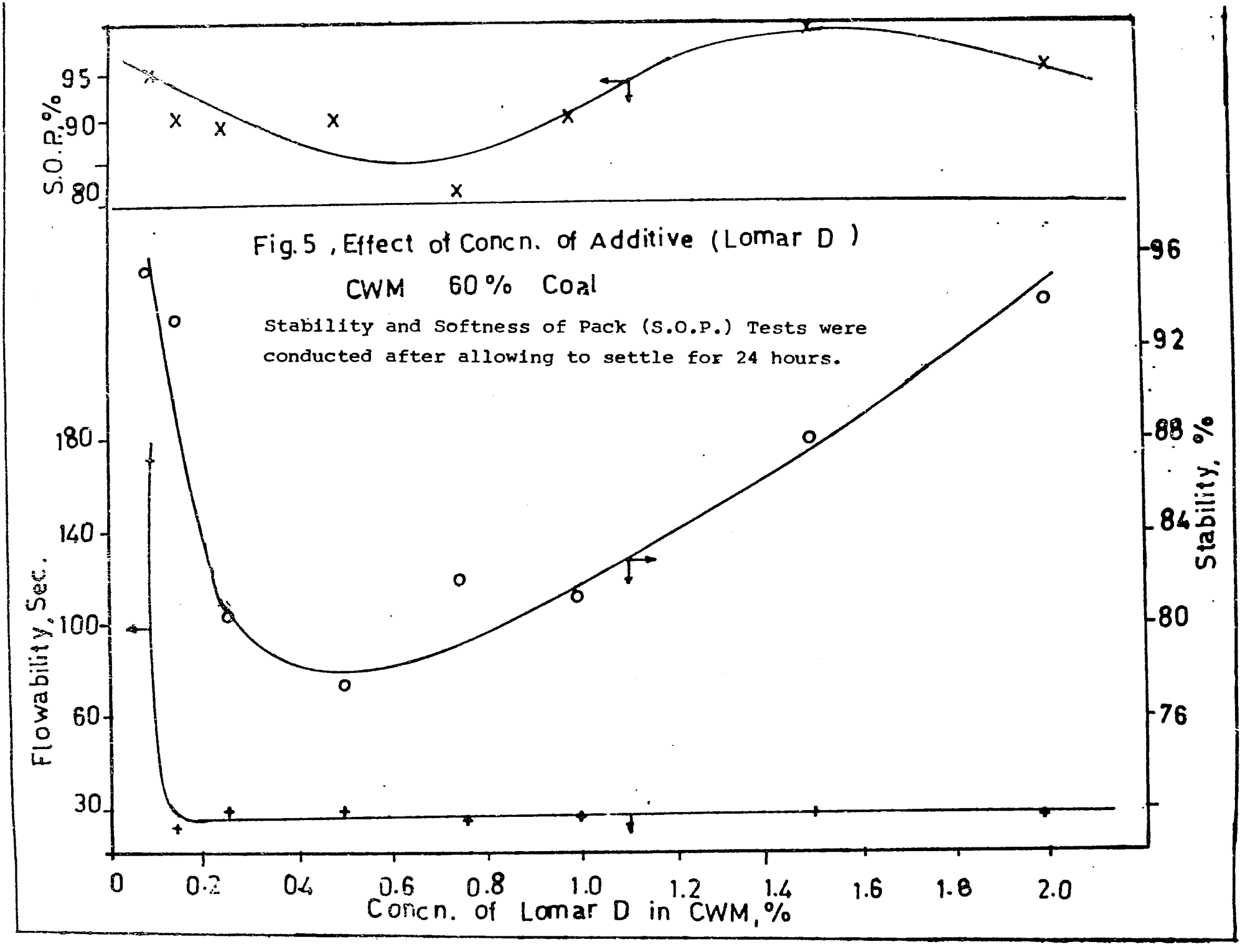

Fig. 5, Effect of Concn. of Additive (Lomar D)

CWM 60 % Coal

Stability and Softness of Pack (S.O.P.) Tests were conducted after allowing to settle for 24 hours.

Fig. 6, Effec of Additive (CDS) Concn.

CWM — 60% Coal

Celex — 1.75%

Stability and Softness of Pack (S.O.P.) Tests were conducted after allowing to settle for 24 hours.

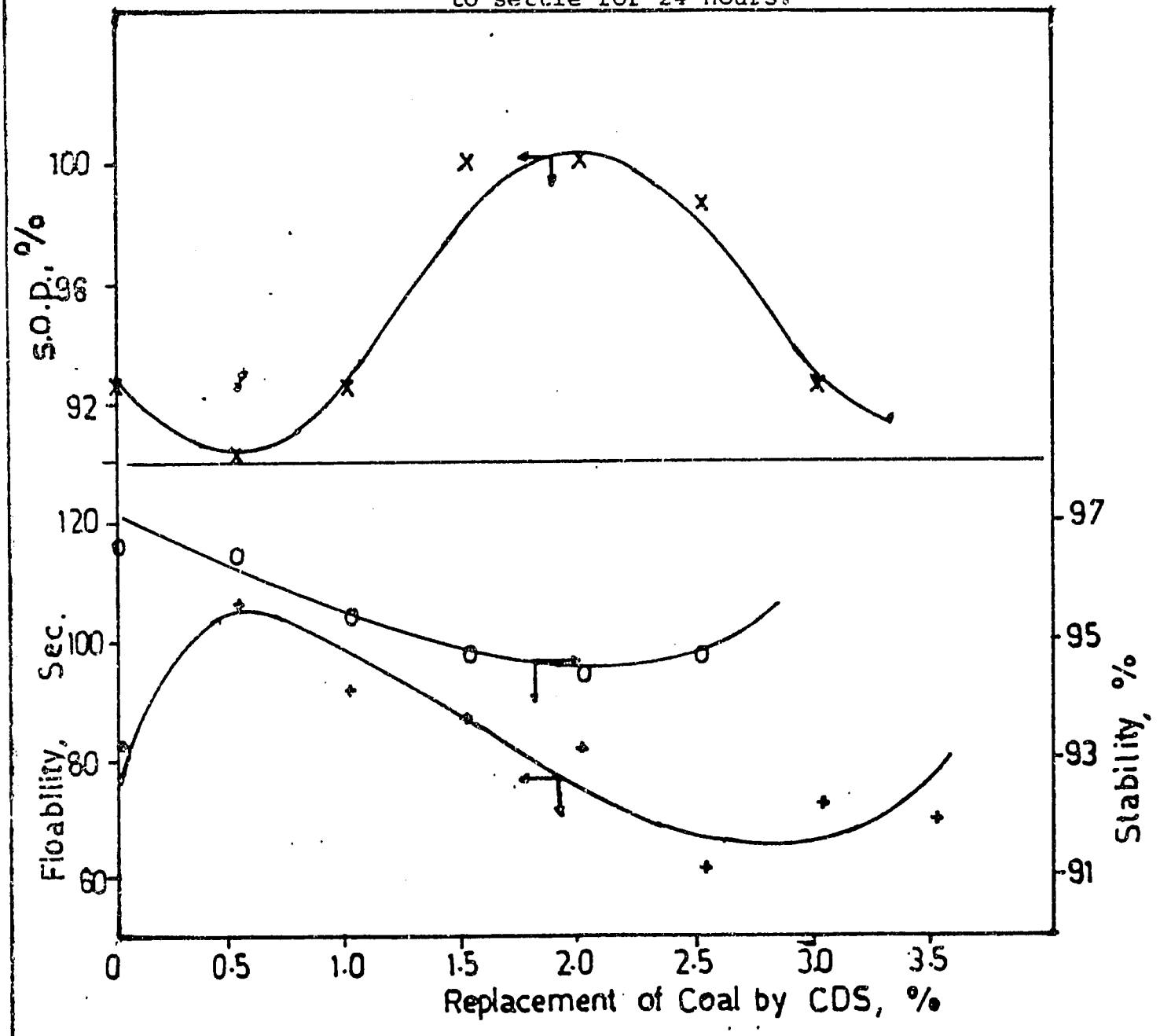

DEVELOPMENT OF COAL WATER SLURRY COMBUSTION TECHNOLOGY PROGRESS IN BHEL

K. Nandakumar
P.V.L.N. Sarma
R. Pattabiraman
K.M.V. Malarkkan

Energy Systems Group
Bharal Heavy Electricals Limited
Tiruchirapalli, India

DEVELOPMENT OF COAL WATER SLURRY COMBUSTION TECHNOLOGY PROGRESS IN B H E L

By

K. NANDAKUMAR
P. V. L. N. SARMA
R. PATTABIRAMAN
K. M. V. MALARKAN

ENERGY SYSTEMS GROUP
BHARAT HEAVY ELECTRICALS LIMITED
TIRUCHIRAPALLI - INDIA.

DEVELOPMENT OF COAL WATER SLURRY COMBUSTION TECHNOLOGY PROGRESS IN BHEL.

K.NANDAKUMAR, PVLN SARMA, R.PATTABIRAMAN
& KMV MALARKKAN.

ABSTRACT: A collaborative research project funded by the US - Agency for International Development (USAID), Bharat Heavy Electricals Ltd. and Central Fuel Research Institute (CFRI) Dhanbad is currently being executed in India with the slurry characterisation studies under CFRI's scope and combustion studies under BHEL's scope. The project at BHEL, Tiruchy involves the design, erection and commissioning of an integrated facility consisting of (1) a coal beneficiation system; (2) wet micronising system for the low ash stream; (3) atomised combustion of micronised CWS with hot air; and (4) high ash CWS combustion in a fluidized bed. Apart from high ash CWS, washery tailings also will be tested in the fluidized bed. The Energy Systems Group (ESG) at BHEL, Tiruchy has the responsibility for carrying out the project. This paper describes the objectives, project schedule, current status, design details, test programs and results achieved so far.

INTRODUCTION & BACKGROUND:

Coal water slurry development programs around the world have reached commercialization stage. Beneficiation of coal for reducing ash from

15 to 3-6%, preparation of stable coal water slurry, combustion to get a stable flame with proper atomization and minimum wear, instrumentation and controls to monitor the slurry quality and flow, obtaining low NO_X have all been achieved as successful steps in the ultimate goal of retrofitting old oil-fired small boilers and large utility boilers as well.

In parrallel developments, coal water slurry has been successfully used for gasification in the Texaco Gasifiers of the ' cool water gasification and combined cycle system ' at California, USA.

CWS is considered as an easier fuel to feed pressurised fluidized bed combustoras and gasifiers. NCB, UK is also doing research in this area. Combustion of washery tailings in fluidized bed solves the problem of disposal of tailings. Australia, Canada, Japan and China have succeeded in perfecting the above system (1, 2).

It has been reported that about 3-4 million tons of washery tailings are polluting the Ganga and Damodar rivers in the Eastern Sectors of India. Disposal of such large amounts of combustible tailings from coal cleaning plants poses difficult problems. Considsering the above need, the ready availability of fluidized bed test rig (0.5M x 0.5M) in BHEL, Tiruchy and also the minimum additional equipment required, this testing has been taken up on priority. From literature survey, already discussed in the earlier presentation (3,4), CWS combustion in fluidized bed has advantageous features like reduced elu-

triation due to agglomeration, enhanced and uniform bed reaction, less sensitivity to excess air and low NO_X emission. The actual quantitative figures will be evaluated during the tests at BHEL. In India, the major coal reserves of Gondwana fields, being of drift origin, are of high ash and low sulphur content. Reserves having less than 18% ash content is a mere 320 million tons against a total reserve of 116 billion tons. But, the Tertiary Assam reserves having low ash (< 6%) and high sulphur (> 6%) is a significant 2500 million tons. With some of the new techniques being developed like electro-acoustic dewatering of lignite, probably the low ash (6%) lignite reserves of Neyveli amounting to around 2800 million tons also can be used as a base fuel. So, preparation of CWS with low ash Assam coals in the first phase, optimizing the level of beneficiation, micronizing and reducing erosion by total cost consideration in the second phase have been planned.

Meanwhile, to gain the lead time, development and testing of atomizers and burners also have been planned. A million K.Cals/h. capacity atomizer/burner system has been designed. Effects of various parameters like slurry viscosity, pressure, atomizing air pressure, air/fuel ratio, combustion temperature, primary and secondary air swirl, etc. are planned for study through these tests.

2.0. PROJECT OBJECTIVES:

The project objectives can be categorized into the following groups viz. preparation and handling system, combustion in fluidized

bed and combustion through atomizers/burners.

2.1. PREPARATION & HANDLING:

1. Design and construction of a CWS handling system having slurry preparation tanks with mixers and additive dozing system, slurry transfering and storage facility, slurry pumping and flow controlling system, pumping system with instrumentation to handle both coarse high ash CWS and micronized low ash CWS.

2. Install a wet ball mill to micronize coal (top size 44 microns).

3. Collect data on performance reliability and power consumption of various equipment and collect data on pressure drop and erosion in pipes, bends and valves.

2.2. FLUIDIZED BED COMBUSTION:

1. Firing washery tailings ;in fluidized bed combustors alone and along with middlings and washery rejects.

2. Data collection on combustion efficiency and heat transfer.

2.3. ATOMIZED COMBUSTION OF CWS:

1. Development of atomizer for getting best spray combustion.

2. Development of a burner with suitable ignitors and scanners to get a stable flame.

3. Data collection on optimum ash content, coal fineness, air swirl and temperature to get reliable burner performance.

3.0. PROJECT SCHEDULE AND CURRENT STATUS:

Major activities with start and finish dates are as given below:-

3.1. FUEL PREPARATION AND HANDLING:

	Start	Complete	Status
Detailed design of system	Dec.84	March 85	Completed
Identification, evaluation & procurement of instruments & equipments	Oct. 84	Dec. 85	USAID components are ready at Pittsburgh. for shipping.
Fabrication	Jan. 85	Aug. 85	Completed
Erection	March 85	Nov. 85	20% completed.
Data collection	Nov. 85	March 86	In progress
3.2. FLUID BED COMBUSTION:			
Design of air cooled spray guns.	Dec. 84	March 85	Completed
Erection of equipment	March 85	Nov. 85	Completed
Combustion tests in fluid bed.	Apr. 85	Sept. 86	In progress
3.3. ATOMIZED COMBUSTION:			
Design of atomizer & burners	Dec. 84	March 85	Completed
Fabrication	Jan. 85	Aug. 85	Atomizers completed. Burners being completed.
Atomization studies	Jan. 86	Dec. 86	..
Combustion by atomization	Jan. 86	Dec. 86	..
3.4.STUDY TOUR & REPORTING:			
Study tour to US.	..	Apr. 86	..
Reporting	Every 6 months.	..	..

4.0. DESIGN DETAILS:

An outline of the design of the CWS preparation, handling, fluidized bed and atomized combustion systems are described below:

4.1. PREPARATION AND HANDLING:

The scheme for preparation and handling system is given in figure 1. Water flow is measured by an integrating type flow meter and a measured quantity is filled in the preparation tank of 760 mm. dia. and 1250 mm height. A dozing pump with a flow meter adds the required quantity of additive, separately kept in a drum, to the water in the preparation tank. A weighed quantity of sized coal is also loaded into the preparation tank after thorough mixing of the additive with water by the paddle mixers. At a time, about 600 Kg. of slurry can be prepared. The paddle mixer ensures thorough mixing of the coal with the additive added water. Samples of slurry can be collected and tested. By a positive displacement screw type two stage transfer pump, the slurry in the preparation tank is pumped to the storage tank of 3 tons capacity. The Philadelphia Mixer(model 3801-S PTO of 11.4 to 1 speed ratio, 125 RPM output speed, 1295 mm (51 inches) long and 610 mm (21 inches) dia.) aids in mixing the slurries prepared in sequential batch. When slurry is prepared for coarse high ash coals, the mixing in the storage tank is particularly needed. Mixing improves the stability over longer durations of storage.From the storage tank the slurry is pumped by a

positive displacement two stage progressive cavity pump with 75 mm inlet and outlet pipes at 9.5 Kg/sqcm maximum pressure with speed reduction from 1440 RPM to 600 RPM to obtain flow range of 362 to 187 litres per minute. The pump is suitable to handle slurries of particle sizes of 6 mm which occur in washery tailings. The stators of the pump are of synthetic rubber and replaceable on erosion. Apart from variable speed of the pump motor, the delivery quantity can be adjusted, by recirculating slurry from outlet to suction side by a control bypass valve. Duplex basket type strainers are provided at the suction side of the pump which will be on line during the test firing through atomizers. The delivery side of slurry pipeline has a KAY-RAY density mass flow meter. (Model 3600 F to measure 150-1500 Kg/h. of flow of 1 to 2 gms/cc density range) and an online Brookfield Viscometer (Model TT 100 with capacity to measure viscosity range of 400-40,000 CPS, at a max. flow rate of 20 liters per minute. with an accuracy of ± 1% span). Digital indications and strip chart recording of the viscosity and mass density flow facilitate analysis of the slurry behaviour during and after experiment. The slurry is tapped to the combustion test rigs from the loop which otherwise is recirculated to the storage tank. The valves used in the slurry piping systems are rubber lined pinch valves. In the recirculating pipeline, provisions for pressure drop measurements across straight pipes and 90° bends can be made. By changing the dia. of piping, the pressure losses can be measured for varying pipe sizes.

For preparing micronized CWS, a ball mill of 200 to 500 Kg/h capacity to micronize 6 mm feed coal to 90% through

325 mash (40 microns) size will be added. Coals containing 20% and less ash will be studied first.

4.2. FLUID BED COMBUSTOR:

CWS combustion in fluidized bed is tested in the 0.5 m x 0.5 m test rig of 0.5 million K.Cal/hr. heat input capacity. The rig has bubble cap distributor, with a water jacketed chamber and has a free board height of 1.25 meter. CWS can be fed into the bed and also over bed with the CWS spray gun insertion points at every 100 mm. height.

Three typers of spray nozzles with spray tip angle of 45° bend, 90° bend and straight flattened tip have been fabricated for evaluating the performance. The spray gun has an inner CWS nozzle of 6 mm. dia. and an outer compressed air tubing to cool the spray gun and also to aswsist in spraying the CWS into the bed.

4.3 ATOMIZED COMBUSTION OF CWS:

Micronized coal water slurry will be fired in a test furnace of 1.5 mm. x 1.5 mm x 4 m. inside dimension, refractory lined and water cooled. The maximum volumetric heat release will be 111000 K.Cals./m^3/h. (16480 Btu/$ft.^3$/h.). The burner designed is of 1 million K.Cals./h. rating.

Best Available Document

The furnace is located adjacent to the Solid Fuel Burning Test Facility (SFBTF) Hot air at 250-300°C from the existing air ducting will be tapped and divided into primary and secondary air stream with flow measuring instruments. The ignition of CWS will be carried out by LPG ignitors available in the range of 12.5% to 25% of the heat input of the burner.

UV flame scanners and scanners of visible wavelength region will be tested for their capabilities to monitor the flame stability and presewnce.

4.4. ATOMIZER DESIGN:

Twin fluid 'Y' jet atomizer is considered most suited for CWS atomization because of its simple configuration and adaptability to the use of erosion resistant materials like ceramic atomizer hole inserts at the spray gun tip. However, BHEL plans to test three types of atomizers viz. Internal Mix Atomizer, 'Y' Jet Atomizer and Low Pressure Internal Mix Atomiser as shown in figures 2, 3, & 4, for proper understanding of each design for CWS prepared with Indian coals and for the ultimate selection of a suitable atomizer. The atomizers have been designed for capacities of 200-50 Kg./h. of micronized CWS, prepared out of 90% through 325 mash (40 microns) particle size, with a viscosity range of 600 to 1000 centipose at 100 $sec.^{-1}$ shear rates. The slurry and atomizing air pressures will be between 5 to 7 $Kg./Cm^2$. The general criterion for atomizer

development has been earlier discussed (4). The parameters for atomizer spray have been aimed at particularly for the following results:

(1) Maximum droplet size to remain lesser than 200 microns;

(2) The atomizing air/fuel ratio, to obtain mass mean droplet size range of 70 to 110 micron, to remain between 0.1 to 0.25 at 100%, 0.6 at 50% and 0.5 to 0.8 at 25% flow conditions.

4.5 BURNER DESIGN:

The criterian for burner design had been discussed earlier(4). In order to achieve satisfactory combustion of CWS it is necessary to evaporate the water and release coal volatiles as quickly as possible to obtain a stable flame front closer to the burner tip. This not only depends on good atomization but also on aerodynamic factors which control the heat transfer rate to the atomized fuel spray. In the BHEL burner, as shown in Fig. 5, to facilitate effective control of the burner aerodynamics, the air supply is divided into primary and secondary streams with separate axial swirlers. In the centre, there is an atomizer gun guide tube into which atomizer assembly is fixed. The burner also has an atomizer positioning adjustment to locate position of the atomizer tip with respect to throat during combustion test. There are three swirler designs for secondary stream with blade angles of 45°, 60° and 65° and two swirler designs of 45° and 60° vane angles for primary stream. These swirlers can be fixed on the primary air tube and atomizer guide tube respectively for

various test combinations. A throat angle of 35° and length of 200 mm. have been chosen for the burner.

5.0. TEST PROGRAM AND INITIAL TEST RESULTS:

5.1. INITIAL TEST RESULTS:

5.1.1. SLURRY PREPARATION:

Non-ionic additives (Hydroxide of a substituted phenyl polymer) at a concentration of 0.1% by weight along with a medium thickener (soluble starch) of 1% was found to yield a stable slurry.

As reported earlier (3), stable slurries were prepared for high ash pulverized coals having 27 to 48% ash content for coal concentrations of 45 to 60%.

For a typical dry washery tailings of the proximate composition and size distribution listed in Table 1, slurry was prepared to get a viscosity of 883 centipose at 37.35 sec.$^{-1}$ shear rate. The shear rate viscosity characteristics, as in table 2, showed that the 60% coal loaded slurry behaved Non-Newtonian.

The measurements were made with a Ferranti Viscometer. The larger particles were found not to settle even after 24 hours

after slurry preparation but hard cake did not form at the bottom of the storage vessel. The smaller particles showed stability for 3 days. The slurry could be made uniform by simple stirring.

TABLE - 1.

COMPOSITION AND SIZE DISTRIBUTION OF WASHERY TAILINGS.

Water content (%)	8.11
On a dry basis (%):	
Ash content	54.08
Volatile matter	22.07
Fixed carbon	23.85
FC/VM ratio	1.08
Calorific Value (cal/gm).	3138
SIZE DISTRIBUTION (%):	
+4.00 mm	2.15
+2.8 mm	1.28
+2.0 mm	1.48
+1.4	2.02
+1.0 mm	0.47
+700 micron.	2.69
+500 micron	13.47
+350 micron	9.90
+250 micron	30.30
+180 micron	9.09
+125 micron	9.09
+63 micron	12.12
+63 micron	5.94

TABLE 2.

Coal loading 60% by wt. Additive 0.2% by Wt.

Sl.No.	Stear rate Sec.$^{-1}$	Viscosity CP
1	13.00	1320
2	8.73	1625
3	37.35	883

5.1.2 COMBUSTION TESTS IN FLUID BED:

Combustion tests are being conducted in 0.5x0.5 meter test rig. Boiler combustion tests in fluid bed reported in the 2nd USAID GOI Workshop during Feb. 1985, were done with raw coal to CWS proportion of 80:20 (by heat content) and stable bed temperature conditions were obtained.

Subsequently, successful bed temperature stability has been achieved with CWS combustion alone. The CWS , containing 51% coal was prepared out of pulverized coal having fixed carbon 36.5%, volatile matter 26.1%, Ash 32.2%, Moisture 5.1% and CV of 2224 Kcals./kg. The coal feed rate was 60 Kg./h. with fluidizing velocity of 2.54 m/s. ands the bed height was 190 mm. the CWS was sprayed over the bed. Bed temperature was stable at 846°C for one hour duration.

Currently, combustion tests have just started after installation of a mechanized slurry preparation tank and a progressive cavity pump capable of handling tailings with coarse particles as listed in Table 1.

5.2 TEST PROGRAM:

5.2.1 SLURRY HANDLING:

(1) Running test of the CWS handling loop and data collection on pressure drop across pipings and bends for coarse coal water slurry such as tailings.

(2) Identification of problem areas and perfecting the method of slurry preparation and long duration storage.

5.2.2. FLUIDIZED BED COMBUSTION:

(1) Evaluation and selection of spray nozzle design and location (in bed at different heights) to get stable bed condition, turndown and high combustion efficiency.

(2) Testing to find the minimum permissible heat value per kg. of slurry to get stable bed temperature conditions.

(3) Evaluating effects of variables like superficial velocity, expanded bed height, bed temperature, excess air, free board height, coal to water ratio, particle size distribution on the elutriated carbon loss.

(4) Perfecting the method of start up and shut down for CWS firing.

5.2.3. ATOMIZED COMBUSTION TESTS:

(1) Spray characterization tests of the three types of nozzles with water or any liquid simulating the viscosity to

get (i) mass mean drop size between 70 to 110 microns at full flow; (ii) constant or decreasing mass mean drop size reduced flows and (iii) atomizing medium (air) consumption to be less than 25% of slurry flow at full flow.

(2) COMBUSTION TESTS TO IDENTIFY THE FOLLOWING:

-to get a stable flame with 2.5:1 turndown;

-to get an auxiliary fuel stabilized CWS flame of 2.5:1 to 4:1 turndown.

-to find the optimum air swirl for primary and secondary air;

-to find the effects of excess air, air temperature, primary and secondary air proportion, throat shape, coal particle size and droplet size on the combustion efficiency.

6.ACKNOWLEDGEMENT:

The authors wish to thank the US Agency for International Development (USAID) and Bharat Heavy Electricals Ltd. (BHEL) for providing financial support for this effort. Thanks are due to DR.D.BIENSTOCK, Deputy Director, Pittsburgh Energy Technology Center, US DOE and Mr.M.K.Sridhar, Director/Technical, BHEL for their guidance and encouragement. Appreciation is extended to the staff of Energy Systems Group and Industrial Power Products Group of BHEL, Tiruchy for their assistance in the project.

7.REFERENCES:

1. R.D.La Nauze, G.J.Duffy.

Technical End Economic Appraisal of fluidized bed combustion for coal washery tailings disposal in Australia,

7th International Conference on Fluidized bed Combustion, Philadelphia, USA, Oct. 1982. PP 847-857.

2. H.Terada, I.Kawoshima.

Utilization of sedimented coal sludge in fluidized bed boiler 7th International Conference on Fluidized Bed Combustion, Philadelphia, USA Oct. 1982 PP 840-846.

3. K.Nandakumar, PVLN Sarma, KMV Malarkkan.

Coal water slurry combustion of Fluidized Beds - Prospects in India. Paper presented in 2nd joint USAID-GOI Coal Bio-Mass Workshop, New Delhi, Feb. 1985.

4 K.Nandakumar, PVLN Sarma, KMV Malarkkan.

Development of coal water slurry combustion technology-BHEL's viewpoint in Indian context. Paper presented in First Joint USAID-GOI Coal Bio-Mass Workshop, New Delhi, Nov. 1983.

oo000oo

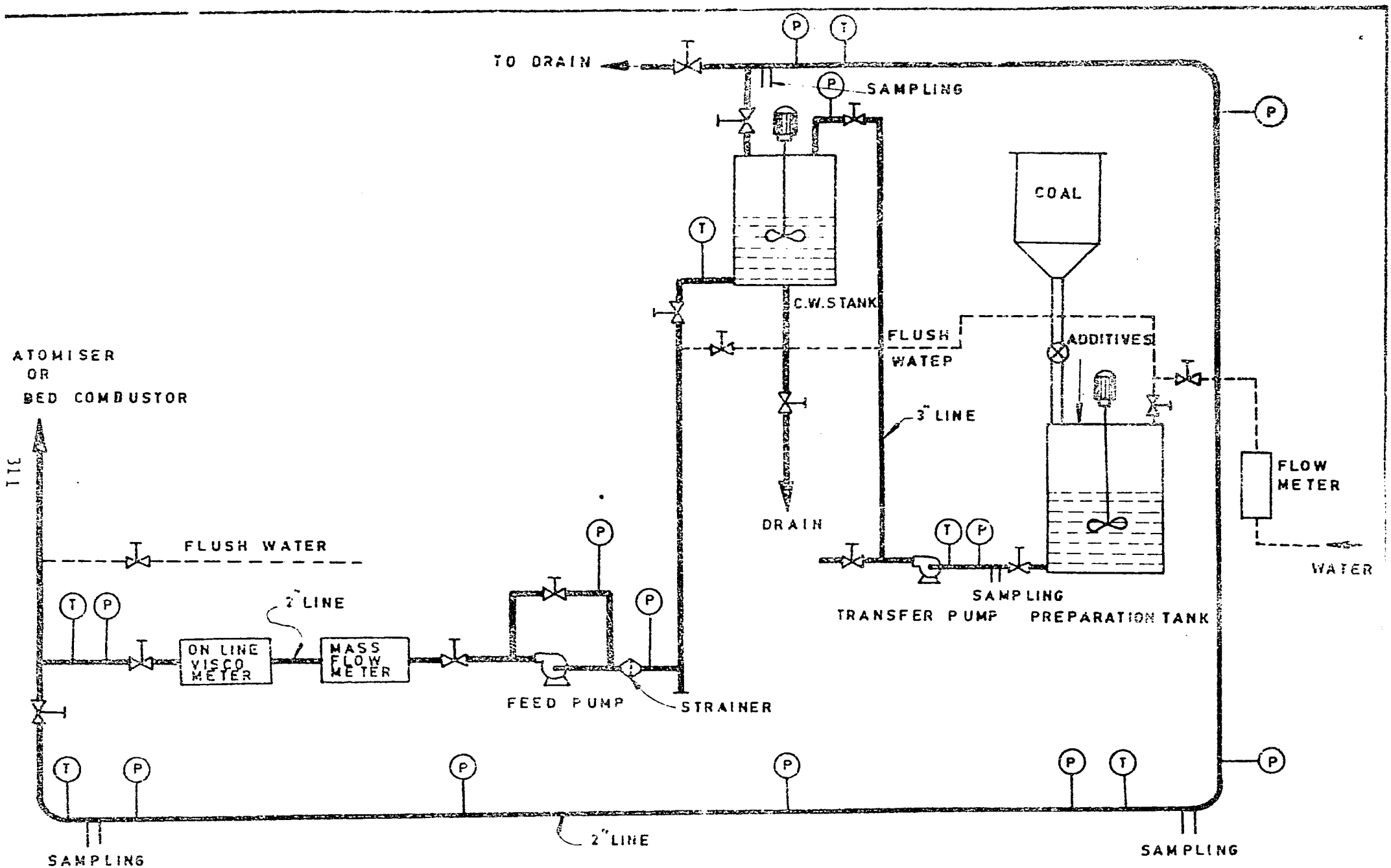

FIG. 1 SCHEMATIC FOR COAL WATER SLURRY PREPARATION & HANDLING

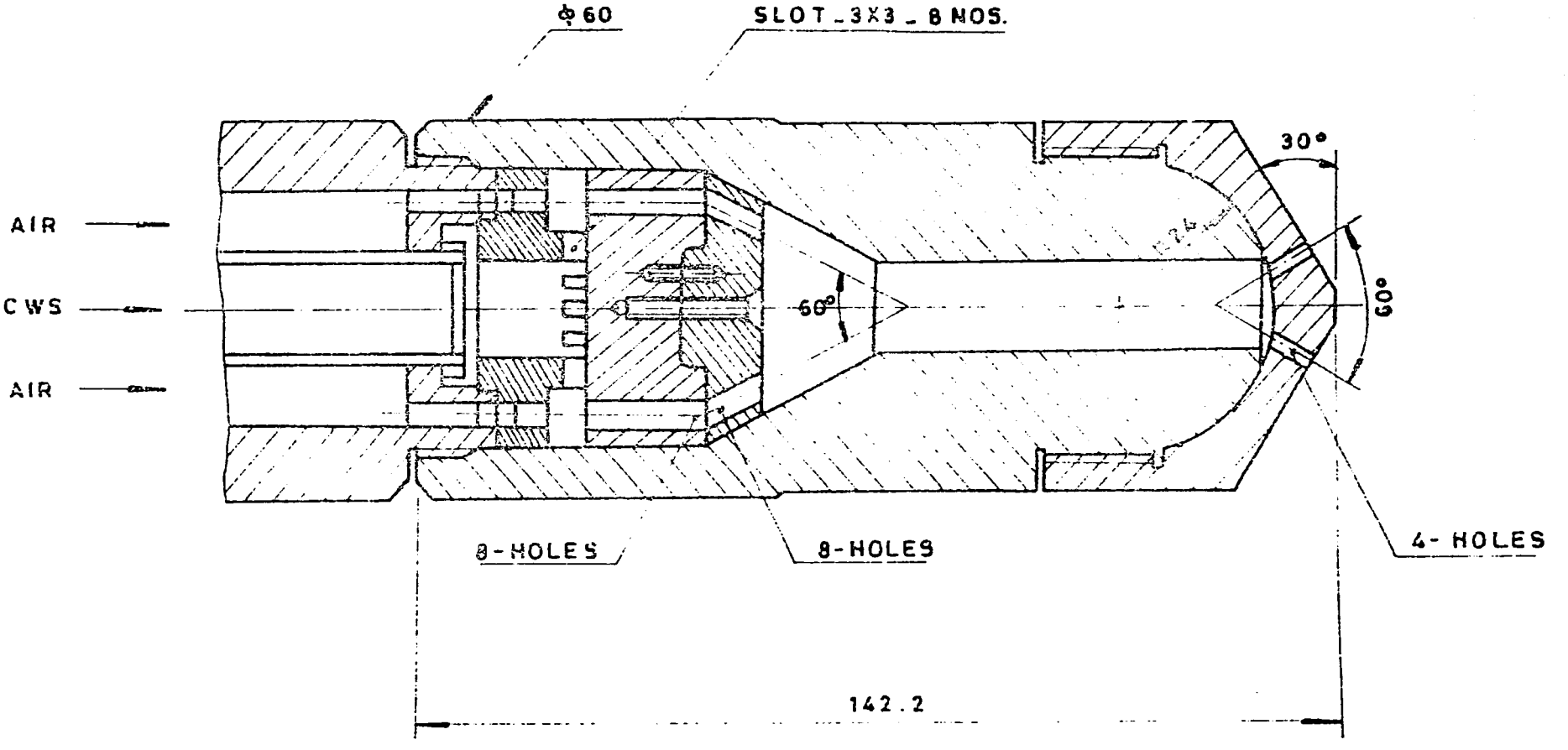

FIG.2 INTERNAL MIX ATOMISER

MULTI HOLE

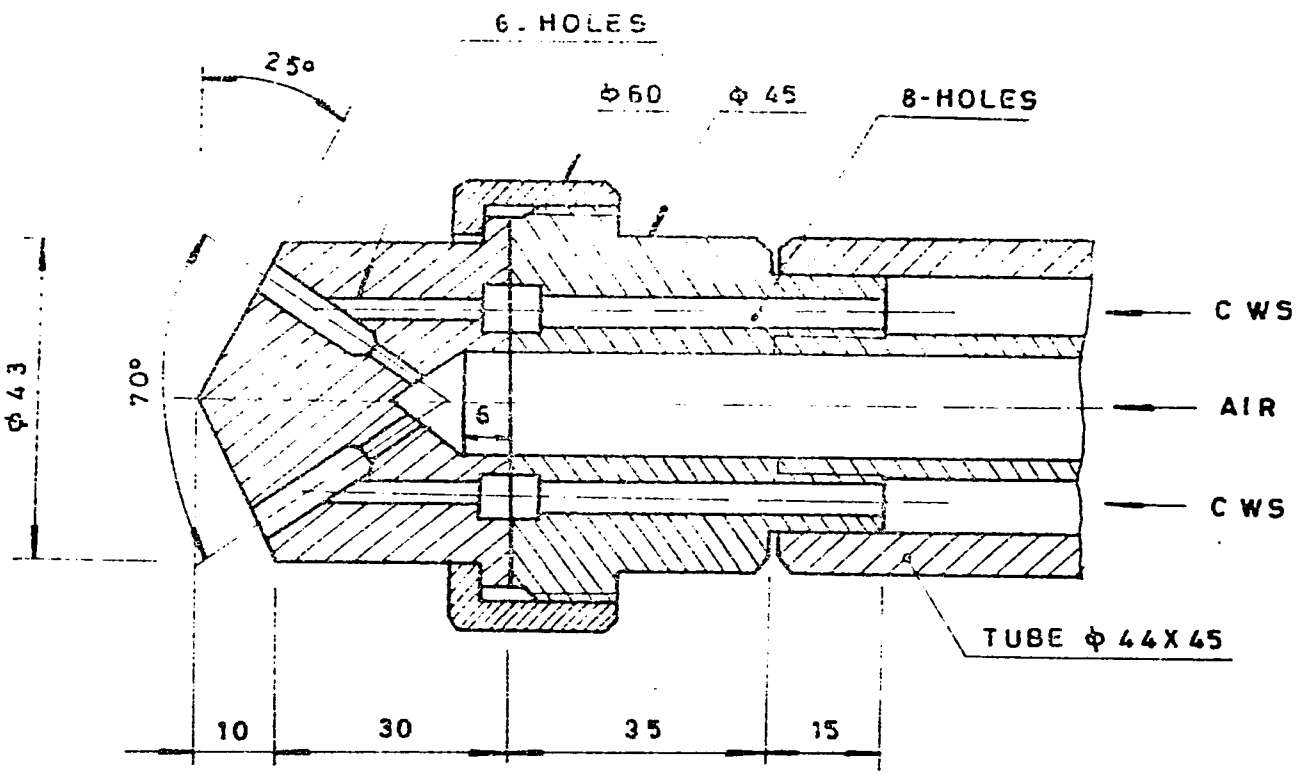

FIG.3 Y- JET ATOMISER

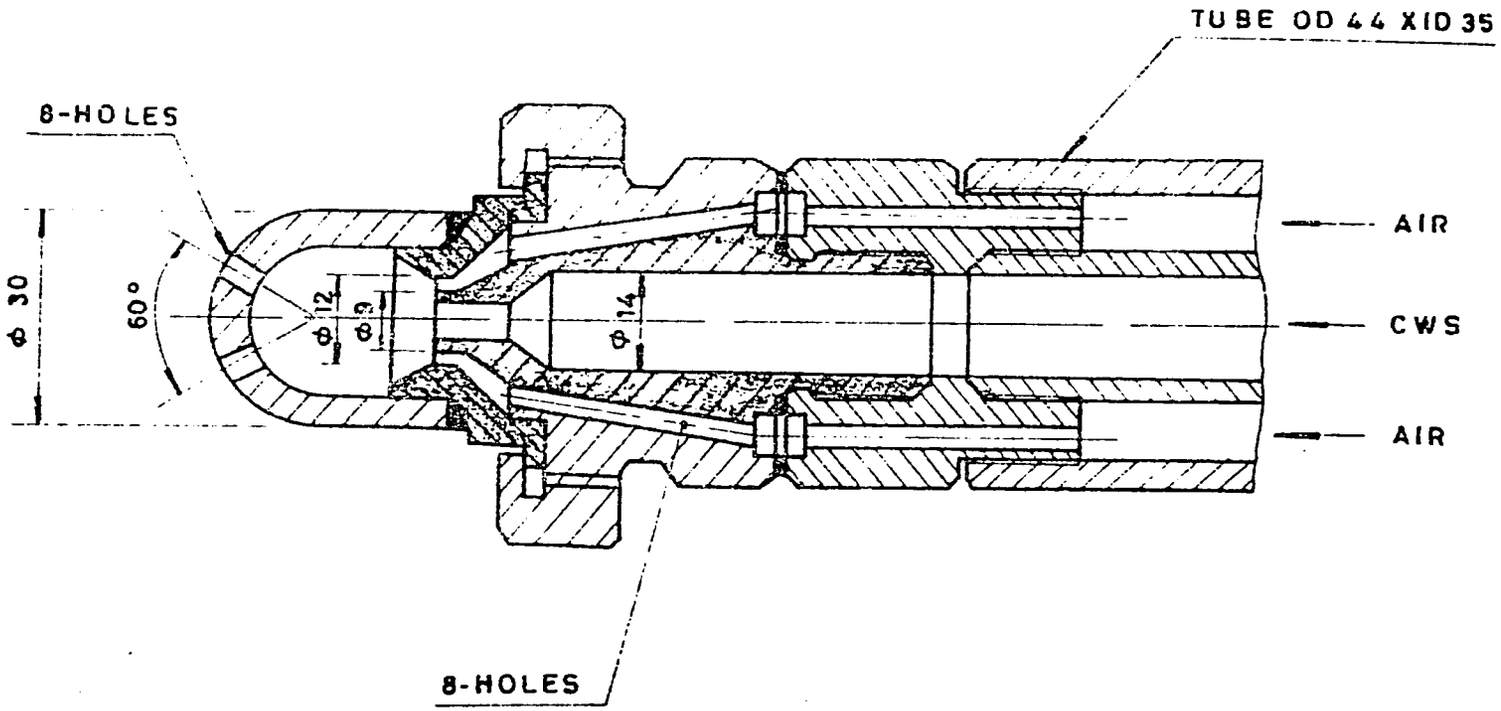

LOW PRESSURE INTERNAL MIX ATOMISER

FIG.4

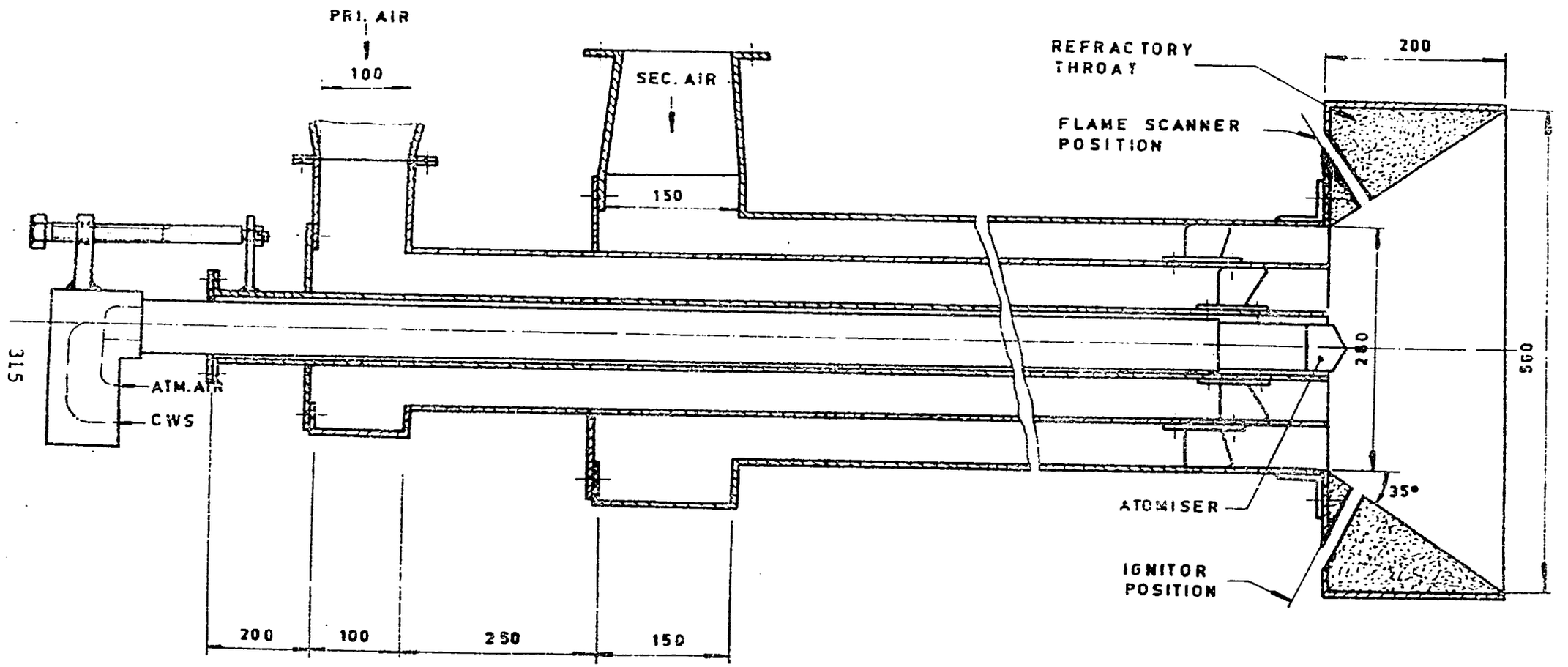

1 MILLION KCAL / HR COAL WATER SLURRY BURNER

FIG. 5

QUESTIONS AND ANSWERS - COAL CONVERSION, MORNING SESSION, DECEMBER 6, 1985

S. Chandrasekaran - BHEL, R. P. Krishnan - ORNL

Q. The project commissioning has been delayed by several months. Are there any particular reasons for this delay?

A. One of the problems we have on this project has been getting indigenous equipment. On a new project like this, a new integrated test facility, our experience has been that there were very few people who could do the type of precision work required. This has led to a lot of delays. So, that is one thing we have to be aware of. It is not like in the U.S. where some of these are off-the-shelf items. At this point I would again like to acknowledge the support we have received from Viking in shipping some of these instruments, particularly with regard to electronics; the data acquisition system, and gas atomizers, where we had to get a lot of clearances from the U.S. Department of Commerce. They have given us excellent support. We were very fortunate to have them take care of a lot of these site visits of the BHEL engineers. I accompanied them on many of these design review meetings, and Viking was very cooperative and gave us a lot of support in this. I would also like to thank Diana Swain. Any time you called her and asked her for help she was there ready to help. And last but not least, I would like to thank my collegues at Oak Ridge National Laboratory, and TVA staff at Chatanooga for the support they have given me in this project.

C. I would like to reply to the concerns about the delay in the supply of indigenous subdeliveries. We have had very inclement weather in Trichy, and due to the recent floods we have had, the links between the major cities of Madras and Trichy have been severed. They will resume the deliveries in about one week or so. There is, in fact, only one train running, so there are components held up at Madras. We are much further ahead than I predicted we would be 20 days ago. The latest news is that we are far ahead in the erection part of it and nearly 70% of the components have gone up on the structure. So we hope to be finished with the major part of the erection by the middle of December, and that will be followed by the insulation and other parts.

C. I would like to add that when designing an overall project of this nature which spreads over two to three years, I think we need to plan for such contingencies because bad roads and things like that will hamper progress. We should plan for all contingencies, and try to get the subdeliveries one or two months before we actually require them. There is no real excuse for delays of this kind when you have two or three years to complete a project. One general remark about our indigeneous supplies; India is going through the process of industrialization. We still have not been able to keep to our schedules as it is possible in the U.S. But now things are improving in India. Earlier we were planning our projects to be executed in seven

years. Now we can execute projects from scratch to commissioning in 40 months. The progress is in the total industrialization and any individual planning a project does not have to wait until the industrialization is available in the country. I am sure that in the future we will be able to do even better.

Q. Are you planning to do analytical work in conjuntion with your power plant facility which will allow for the development of a mathematical model which can be of subsequent use when you undertake the scaleup of this facility?

A. We don't intend to go into this aspect in the first phase, since our main interest is to assess the performance of the freeboard region, and then incorporate the design modification necessary to enhance the combustion efficiency and the sulfur reduction. So, our main interest will be in the freeboard part of it, that is in the phase one. We may consider getting into some analytical work in the later part of the program.

C. I think this is a very good suggestion that has come from Mr. Pandya. You are going to get good and varied data from this well instrumented test facility. At this stage we should start the analytical work, so that by the time you have proper data from the facility, you'll have the analytical backup ready to correlate the experimental as well as the analytical work.

K.M.V. Malarkkan, S. Sundararajan - BHEL

Q. I noticed that you have been using electrostatic precipitators; what is your experience with this? Also, in one of your slides, I saw one of the samples a high calorific rating of some 10,000 kcals/kg. What was that fuel?

A. The need for the electrostatic precipitator is more for pollution control. To maintain the outlet concentration at 150 to 250 milligrams/cubic meter, we find that the electrostatic precipitator is almost necessary. We don't anticipate any problems with the precipitator, and we are confindent that this concentration can be achieved. We have conducted tests on this AFBC ash and have referred this to our collaborator. They also have experience with electrostatic precipitators for AFBC systems. So based on that, we are fairly confident with their experience, as well as what we know about electrostatic precipitators.

Q. I thought that you were using a bag house and not an electrostatic precipitator in your 30 MW AFBC demo design.

A. Yes we are. An electrostatic precipitator probably can be used; however, in the demo plant we found that the space is pretty much restricted.

Q. What are the techniques used for the addition of limestone?

A. The addition of limestone requires coals that have more sulfur. In the US we have 3 to 4% sulfur and the coals we find in India do not have more than 0.2 to 0.3% sulfur. Hence, we do not intend to have a limestone feeding system in those percentages, but it can picked up. There is no problem with that.

C. I would like to add that we have done work at RRL on limestone addition. After 2.7% sulfur has been tested, we have been able to get, with limestone addition, 90% retention in the bed. In case there is a requirement for the northeastern region coals, we are in a position to design one based on those experiments.

G. Viswanathan, S. Shanmugam - BHEL

Q. The rejects from froth fluidization of coal will be fed as a coal-water slurry. When you feed a coal-water slurry to your fluid bed, particularly with such fine sized material, can we still call it a fluid bed?

A. There will be a presentation in the afternoon on this subject that will discuss this thoroughly.

Q. With such fine material there is bound to be a lot of material carry over. Unless we are thinking of recycling it, carbon conversion is going to be very low. These aspects have been taken note of. I would like to have the other comments on this.

A. I think both of these aspects are being taken care of. We would like to discuss this in the afternoon.

C. I would like to make one comment with regard to the schedule. A one year test program is not realistic. I think it should be extended, and I'm sure that once the schedules are initiated, and the project begins, we will find that one year of testing is not going to give us the information we need. A three year test program would be more realistic, but then we have to look at the mechanism of who would be involved. But I think a one year test program is unrealistic. The second point I would like to make is the experience with forced and natural circulation, and the bag house will be a rather unique experience for BHEL and the country. We would like to ascertain if this would be the concept that we would propose for scaling up the larger plants. I think there is very little information in the US on ESP, and FBC. The only example that comes to mind is the Black Dog we heard about yesterday. This would be the first plant in India -- a bag house attached to a multiclone separator. The question is, do we have to go with natural and forced circulation for larger sized plants? Capital is a critical factor to consider when we look at forced circulation, but as demo plant, I think this will address some of the important scaleup and design parameters if, as I suggested, the test program could be extended to two to three years.

A. The test program takes into consideration that this is going to be in an existing power plant that will be owned by a utility. So, of course, if in the opinion of ORNL and AID, if we are to generate more data, it could be extended. Then, we would like to put the plant into operation in about 36 months. The test program could be extended for this.

I think our first objective should be to set up the plant in 36 months, and start testing it with coal which are to be tested within the total test program. By that time maybe some of the coals we know so well will not need to repeat the tests here. But we definitely have in mind to do the testing with a number of coals so that confidence can be built up for larger sized plants using a variety of coals.

For natural and forced circulation combined operation, we have such a plant already in operation. The 45 tons per hour plant at Vizakapatam has forced circulation in the bed, whereas the water is natural circulation, and the operation has been satisfactory. We went with the natural circulation only to avoid the capital investment in circulating pumps. Such experience is available. But it is the bubble growth and erosion potential we need to address in the demonstration plant. If it is feasible, as Dr. Krishnan suggested, we could do away with the pump. Regarding the bag house and the electrostatic precipitators -- the resistivity is generally better with the high sulfur coal. We mostly have low sulfur, so on analysis of AFBC ash, we found that the resistivity is not much different from the PF ash. As Dr. Abbi has said, we also have comments from our collaborators ASF, and they are confident that we can go with the ESP, because the characteristics are very much the same. In contrast, in the US when you add limestone, you don't have as much sulfur particle. You are changing the characteristics of the ash with this, as compared with the PF system. That could perhaps be the reason why there are no electrostatic precipitator installations in the U.S. The reason why bag houses were opted for for the demo plant was purely because of the space restrictions. We are confident in the electrostatic precipitator's performance for the AFBC installations too. We will be getting the data from the Vizak plant where we have the electrostatic precipitator in a year, and also from the Vizak paper mills. These two plants are expected to be commissioned in early 1986.

Q. Since BHEL has supplied several fluidized beds in the country, I believe they are competitive in cost compared to conventional stoker-fired boilers. What is the cost and efficiency of these boilers?

A. We first projected a list of installations that may be interested. We got these orders in competition with all other stoker-fired boiler suppliers. That speaks for itself on the cost and efficiency aspect, I believe. All these installations are owned by private industries. There are two aspects to the data which you obtained from the 10 tons unit and the 45 ton units. One aspect is they are using inferior coal from what they are designed for. One unit was designed for 60% ash, and they are using 40; the other was designed for 39, and they are using 45-50. The performance that we obtained is a little better than what we expected from the design coal.

Q. Today we have heard about FBC technology, particularly the atmospheric fluidized bed, and yesterday we heard about the Black Dog plant and TVA's 160 MW. In the Indian context, do we have to go through the 30 MW before we go to a bigger size? I would like to hear comments from the chairman and the delegates from the US.

A. We have worked on the fluidized bed installations from the beginning, and our problems are not directly the same as the problems faced by the US. Their main objective is sulfur retention. We have the operating problems, and based on the discussions yesterday, we see that the problems we face are not the same as those the US has to deal with. One example is that there is no erosion in the TVA plant. They have logged over 12,000 hours.

We have two plants; one is not having an erosion problem, and the other has erosion in some pockets. This is just one example. In my opinion, we have to generate data with the proper scaleup and from 45 to a scaleup factor of 4 or 5, that is 150. We should get the data for our coal as applied to Indian operating conditions, especially the utility requirements. I would like to invite our US friends to comment on this part.

C. We had erosion problems after 500 hours. So I understand your problem with erosion. The scaleup would be a rational approach.

C. I agree with the speaker that the experience with Indian coals and US coals are similar. I feel that you have to build a small size plant, at least 20-30 MW, first. We have selected the 30 MW for two reasons, which relate to the question previously asked by the gentleman from Tata Electric: We have not only established the reliability of the operation, but also the techno-economics of this system. Right now, the state-of-the-art is such that, as the TVA paper said, there are no technology related outages in the TVA 20 MW plant. The TVA 20 MW plant is really a Cadillac in the sense that it is more than a pilot test facility. I don't want to be the spokesman for TVA, but even with that I am sure that the ultimate size, according to Mr. Daugherty, is 500-600 MW, but they are still building the 160 MW. As long as I have been in the engineering business I have found that you really re-assess what your scale-ability should be. For example, from the 20, you have not gone to the 500, but to the 160, which is really a scale factor of 8. Then, hopefully, the next one will be the commercial size. I think that is the way the utility industry would want to see it also, because they want to see something that has been operating, and in which the scale factor has been established. I think when you look at the scale-ability of fluidized beds, you will not have a problem up to a certain point, but then when you start scaling beyond that, the question is not technology related, but is about the scaleup with regard to the geometry, and how you should design the boiler. I feel the exercise that we are going through here -- scaleup from a 30 MW to a larger size, and finally to the commercial size -- is an exercise that we have to go through. The information that we have in the US is not always translatable because the coals are different. For example, we are using a limestone bed with the sulfur coal. Here, you don't use a limestone bed. Most of the erosion can be because of the use of limestone. So, in many cases we can use the information. Yet, from the Indian context, we have established operability, reliability, and techno-economics. In order to see how this system compares to the utility, we have to have the 30 MW plant. It is a very good question. I think it would be useful to take this issue up in the panel discussion.

C. There are many more aspects on the necessity of going for a scaleup. For example, the cost aspect with respect to the type of coal available is very important. Today, with the kind of mining adopted in this country, what are the depositions of the run-off-mine coals? They contain fines of less than a millimeter, something of the order so that stokers can no longer take them. The unburnt fraction is too high with such fines in stokers. Secondly, the quality of coal is being degraded year after year. When such coal is available, the cost is substantially higher when you want to go to

the next coal size. The fluidized bed boiler would keep the cost lower. The grafting elements of such pyrolyzers today has come under quite a critisism. We still have to find a material good enough to sufficiently withstand a long period of time. If you are looking at the component designs and the method of support, they need to be studied. They just cannot be exterpolated from the size and the arrangements we have today. The very integration of the design, when you go for larger sizes, also needs to be studied. The structural aspect is definitely an aspect we need to understand when we go for a new configuration, a new arrangement, a new support system, the kind of fuel, and the quality. There is an absolute necessity to look for a demonstration plant and make it perfect before we make a really large plant.

K.M.V. Malarkkan

Q. What do you mean by the "flowability" of CWS?

A. Flowability is nothing more than fluidity, which is the reverse of vicosity. The viscometer has just arrived from the USA. We shall be using that viscometer for quantification. It is a comparative statement as to how the fluidity varies from additive to additive, or from size composition. It is a comparative figure which we have projected here. This cannot be used for any design purpose. We will be getting comparative data in the next few months. This is just to show how fluidity of substance which, as I said, is the reverse of viscosity, and how it depends on the particle size mix, concentration of additives, and other things. How it is related to stability? Stability is the settling rate, and the compactness or softness of settled mass. The standard one is how the settled mass can compact. Can it be pulped? We wanted to show how these paramters vary from additive to additive, concentration to concentration, as well as the particle size mix. The flowability cannot be utilized as such. Other things can. The stability is clearly related to the flowability of the particles we have shown. So, the flowability data is not very precise.

Q. What are the advantages of de-rating? In my opinion it is a disadvantage.

A. Yes, derating is a disadvantage. But minimum de-rating is an advantage in the way that we looked at it. With coal-water slurry, we should de-rate. The de-rating is a necessity because when you want to convert an oil-fired boiler to coal- firing, you can't get the output completely because of the different fuel characteristics. Basically, the slagging problem comes with it; however, de-rating has to be limited. The experience of certain companies has been that de-rating has been so large -- 40 or 50% -- that it is not worthwhile. It doesn't make it economical.

Q. What is the slurry pressure and the air pressure during atomization?

A. It depends on the configuration of the atomizer. You can make a different kind of atomizer, and if you have a T-mixing, a more torturous path is taken by one medium, and more pressure is lost on that. The present day atomizers also have the capability to operate with medium pressure, with the atomizing air pressures lower than the fuel pressures.

Q. Why is there so much less sulfur dioxide? About the stability of coal-water slurry by mechanical means, is it possible to do that?

A. There is less sulfur dioxide because of the large amount of water that is associated with the fuel. The combustion temperatures are always a few hundred degrees less. Compared to the present combustion system, because the temperature is less, SO production is less. Concentrated slurry

flows laminar through a pipeline. So under that condition there is considerable settling in the pipeline. This will go on depositing and ultimately, there will be blocking. We have to make it a homogeneous substance in this so that you can transport it and atomize it. In any case, you cannot make it stable for long; it is a thermal dynamic nonequilibrium. But you can keep it stable for a pretty long time by giving it a coat of chemicals which will act as a double layer. It is necessary for transportation.

Q. Regarding coal-washery rejects and tailings, and combustion by coal-water mixture, these tailings or washery rejects don't have a fixed composition. They will change with the change in the quality of the incoming feed to the washery; therefore, suppose the washery rejects change from 45 to 65, which is the usual figure, what design provision is made in the combustor to tackle such a variation?

A. If the variation in the ash levels affects the calorific value of the fuel, then you have to have the capability to push in more fuel. If the calorific value goes down, you have to put more fuel in. So, that amount of flexibility has to be put in. It is not difficult. The fuel injection devices could be designed to take care of this. Of course, we will need more residence time with more inert material. We have been testing a number of alternatives of how to inject this fuel into the bed. By injecting properly, you can take care of residence time. There are other problems, like agglomeration, which take place if you have very low fuels using mineral matter, so it is a combination. We have to design the injection system suitably.

Q. You have shown a table with the particle size distribution obtained from a grinding unit. I noticed that there is a very wide spectrum of particle sizes. I would like to know if these distributions are obtained from a close circuit grinding, or an open circuit grinding where the particles are ground and then the sizes taken, or are they first classified and then the sizes taken. Is there any attempt being made to predict particle size distributions while grinding? This is similar to what we are trying at IIT. That is, from laboratory studies one can predict the distribtuion for the larger mill.

A. I'm sorry, this size distribution is not from a grinding circuit. It is from a washery tailing. In fact, we were also surprised to find some of the larger particles that we came across. From the circuit description, we are not supposed to get the larger sizes, but we are not sure how we managed to get the larger particles in these washery tailings. What I have presented is not from the grinding circuit. Of course, with the grinding circuit, like dry pulverizers, we do have very well defined particle size distributions. I don't have the information straight, but it is possible to give you this from dry grinding. We don't have the information on wet grinding.

Panel Discussion

For your observation and comments, fluidized bed has reached the stage of commercial exploitation. At least it is on the threshold of commercial exploitation. Coal-water mixture, well, it still has to prove its performance on a slightly bigger scale before it can be exploitable. As far as commercial exploitation of fluidized bed systems is concerned, the first important consideration is broadening the customer's confidence. It is sometimes impossible for us scientists and engineers to go to the user and try to project our capability. We say we can do this for the customer, and tell them it will be beneficial. What we are selling is quite different from a consumer product, like soap cake or talcum. With consumer products it is easier to convince the consumer because you have the media to help. The advertisements show all the film stars using it and getting a better complexions. It is easier to convince them because they feel their skin can be almost the same as that film star. But when it comes to capital goods, it is not just a few rupees that you will spend on the soap cake, but the few million dollars that has to be spent on the equipment, and consumers always like to see a reference list before the make expenditures of that size. That reference list cannot be created by the designer, by the scientist, or any individual company. For that, the nation as a whole, the national sources, the international sources, and the total interest of the community, or humanity as a whole, has to come to put the resources together to bring about the demonstration. A demonstration is ultimately required to bring about the confidence of the customer or the user. I think the main subject I would like to discuss with the panel is setting up a large sized utility plant and a demonstration unit in India. There are some demonstration units in the US; for example, the 20 MW TVA plant. They have done a large amount of work there. I have personally seen the plant, and looked at their data. The coals they are using are different from our coals. Coal is a very complex substance and we have in our audience a number of coal scientists, if they will bear with me, no two coals are similar. They never will be. So we have to test our coals with respect to our environment, and our manufacturing capability with respect to quality and other things. So, in my opinion, a demonstration plant is a must for a fluidized bed of a fairly large size. From there, we may be able to scaleup to the larger size easily, since that will for the basic model for scaling up. I would like to put this subject to the panel for discussion, and I would like to invite comments from all of the authors here, as well as anybody from the audience.

C. I'm certainly not a fluidized bed expert, but I concur with the chairman and the other speakers concerning the scaleup of the AFBC boiler. The approach that you have outlined is certainly sound, and absolutely necessary. I also agree that the coals that are available in India are certainly different than the coals we burn at TVA. The approach you are laying out appears to be a sound approach. Our technical people have reviewed the design aspects of the scaleup boiler and it's gratifying to see that those are being incorporated into the design of your 30 MW proposal. I encourage you to continue on that road. The scaleup is

necessary, in a step-wise fashion. There is always a tendency to want to leapfrog into the larger commercial units, but we at TVA have found it to be beneficial to us to take the step-wise approach and move with decision as we go into the higher commercial units. I encourage you along that line. I think you are taking a sound approach, and just from my observation, it looks very good.

C. I agree that the way to go is with a scaleup. I would warn you, though, that in my 40 years in this business I have found that every time the industry has made a step, we thought we had all of the answers at the lower level. At the next level, however, we have found that there were always a few that we hadn't found. So, don't expect that you will make that step and have everything go perfectly. The only way to make progress in this business is when you are moving forward, you have to take a reasonable step that will get you most of the answers, and then take the next one.

C. I think the same reasoning has held for the last 30 years or so in the nuclear industry. We started out with the same type of fuel with 90 MW units, graduating to between 200 and 225 MW, and stabalizing at 600, 900 and 1200 MW electrical units. That proceedure prevailed in the other power production areas as well.

C. With this conference, we can think of a bigger size than the 30 MW. But the answers that came in from Mr. Malliah and Krish, as well as others, are thoroughly convincing, and I hope everybody agrees with the views that a 30 MW plant is a must before we get into a larger size.

Besides the scaleup problems, the point of relevence as far as India is concerned is that there is an immediate application for fluidized bed boilers to replace the 20-30 existing 30 MW boilers. Besides that, there are also these washeries, but you can have a larger number of 30 MW boilers. This will not only have the scaleup advantage but also the immediate application advantage.

C. I have a slightly different point of view on these large scale boilers. To recapitulate, we started with fluidized bed boilers because the first basic and obvious advantage many people found in it was its capacity to neutralize sulfur better than in pulverized coal boilers. Otherwise, the pulverized coal fired boilers do have a much higher efficiency. Perhaps the only thing they can tell us further is that the furnace volume was large. But as a boiler engineer, I will tell you that a large furnace volume will be compensated by smaller separaters and reheaters, because the pulverized fuel boilers will give higher temperature flue gases. So, what you will save in one you will spend on another if you go into a higher type boiler. The fluidized bed boilers still have significance for the higher size boilers, if you have the agonizing problem of high sulfur and the solvent material consumption. Of course that is very relevant in USA because they have high sulfur coal, and they are worried about the

consumption of solvent materials. The fluidized bed boiler does give a sulfur neutralization with a lesser quantity o solvent materials. In the context of India, for all of the bad qualities that our Indian coal has, God gave it its own good quality -- its sulfur is less. So as far as the fluidized bed boiler has greater significance than smaller boilers, 30-40% of the coal in India is used in sectors other than the utility sectors, including transportation and industry. These sectors operate with thermal outputs of less than 25-30 MW. In that sector, they are using it for a very long time. I feel it should continue, but I don't know if fluidized bed boilers have a significance for large boilers in India where the requirement of sulfur neutralization is not there.

C. Some of the questions may have been answered earlier regarding the application fluidized bed technology to Indian conditions, and variaties of high ash coals, but we do have a lot of problems maintaining pulverizers. The problems have to do with erosion and also coal fly utilization. In that context, even for high capacity boilers, we do have several applications for the fluidized bed boiler. Next, comparing fluidized bed boilers with the pulverized coal fired boilers, we do find that it is not of a technical benefit when you compare fluidized bed boilers with pulverized bed boilers especially when you are talking about 30 MW. 30 MW is fine but you will find a lot of difference in capital costs, if we go for fluidized bed boilers.

C. I want to comment on a previous speaker's point. The fluidized bed in the USA is for sulfur, the fluidized bed in India is for high ash, and not for sulfur at all. That should be understood. The comment I want to make is I have been following the fluidized bed program in this country with great curiosity. So far BHEL is the only industry that has been involved in this program, in association with some laboratories. One observes that there is a lot secrecy maintained. It has not been open to everybody. But at the same time, to have a very large scale demonstration plant, we need cooperation from everybody, including financial cooperation. How far the knowledge will be shared is my doubt. In the Indian context, I think this has to be worked out. I have not seen any other organization that has been working on this program.

A. I think the BHEL, or the CSIR laboratories that have been working on this, have been fairly opened. I know they are doing some work in this area to some extent. We welcome the participation of any organization in India for this joint government work. It is not a BHEL or a CSL problem we are trying to solve. One line I would like to add to the comment is regarding the elements on the fluidized bed, large size or small size, for Indian conditions. If we try to compare the pulverized coal fired boiler and the fluidized bed boiler, having low sulfur and low ash, then pulverized coal firing has an advantage over fluidized bed. But when we are talking about the fuels which can now be burned in a pulverized firing system, or very high ash coals, fluidized bed definitely has the advantage. In a few years to come our country will have 100-200 MW based on fluidized bed. That is my intuition and my feeling.

C. Yesterday we all heard that TVA ran a 20 MW plant, and are scaling-up to a 160 MW size. We also heard that BHEL has already sold a 30 MW plant. This 10 MW to 30 MW, is it all that big of a scaleup? If you are really interested in 30 MW units, you should be able to design it and set it up on the basis of the 10 MW experience. As far as demonstration is concerned, we should go for a much larger size.

C. We all know that the fluidization is the most difficult operations for scaleup. That is why I feel that an intermittent level of operation is necessary. Even when you go from 30 MW to 160 MW, I still believe you face a lot of problems with distributors, and other things. It is well know that fluid combustion, or any operation, is supposed to be more efficient in terms of heat transfer and excessive air use. From that angle, fluid bed combustion appears to be the method to use to burn any type of coal, even low sulfur coals. The next step would be to go to pressurized because that will reduce the cost further, and because the size of boiler would come down.

Q. Why is molten slag technology not being considered?

A. I think we have started looking into it. We have started talking with our US experts on that subject.

Q. We are negotiating with BHEL to install a 30 MW boiler in our plant. What is the ratio of bottom ash and fly-ash in AFBC boiler for the 60 MW and higher capacity boilers? What is the U.S. experience? Should there be a limit to the fines of the coal that are below 1 mm in size in the fluidized bed boiler coal? We have been given 6 mm and below as the coal size required for the AFBC. With regard to the selection of the dust treatment, because of the last quantity of fly-ash you want in the FBC process, would one prefer ESP or bag filter?

A. I don't have that information. We haven't done the testing, but we did use bag house on the 20 MW. We designed it that way. The 160 will be tied to the bag house we already have on the one at Shawnee. The 30 MW AFBC has bag house.

C. I think the question of a bag house for a conventional unit has not been resolved. Based on the first questions, I would like to add this comment. The ratio of fly-ash to bottom ash depends very much on the coal. If we have a soft, plyable type of coal, then the amount of fly-ash will be more than the bottom ash. If we start firing very high ash coal, like washery rejects, then the ratio increases and the bottom ash quantity becomes small. If we have overbed feeding, then the limitation of fines has to be there or the amount of unburned carbon going into the fly-ash will be more. But our experience, since we went to the bottom feeding through the bed, is that any amount of fines are acceptable. A reasonable amount of fines can

also be accepted, and still give good combustion.

Q. So far we have heard of burning raw coal, or coal which has been upgraded, in the burners. In India we have the problem of high volatile coals. Has anybody tried to burn devolatized coal in fluidized bed combustors? This controversy, when you put feeding on top of the bed, it is the fines that create your lack of combustion efficiency. Is it the fines, or the volatile coming off the coal? The only way to test this would be to try devolatized coal, and try this with underfeed or overfeed. The advantage is that we would recover the volatiles which have high value products, as far as the Indian economy is concerned.

A. I would first like to address the speaker who asked about the use of FBC in the US because we have high sulfur coals and in India we have low sulfur coal. Does it really makes sense to look at the high capacity boilers? I would like to make one point here. When you compare sulfur content, it is very superficial to say that you have 3% or 4% sulfur coal and we have 1% sulfur coal. That is not the way it should be viewed because it should be looked at in terms of the calorific value. If you have 1% sulfur coal and low calorific value, you have to burn more coal to get the same amount of heat. If you do that, your sulfur oxide emissions, in the Indian context, could be alarmingly high when you go to a large plant. The comparison should be as the speaker maintains; pounds of SO_2 per million btu. If you do it on that basis, it doesn't matter if you start with a 1% coal or a 3% coal. You have to look at the heating value also. In the Indian context, when you look at large power plants, there will be a time when you will be faced with an SO_2 problem, especially in a big metropolitan city. When you look at a 300-400 size plant, the sulfur oxide emissions can be very high even with a low sulfur coal. We have 1% sulfur coal in the US. In fact, most of the western coals are still 1%, but we still plan to use FBC for that. The second question is was regarding scaleability. I think we all agree that we have to go carefully, step by step. The approach taken by BHEL aligns with TVA, but other people caution us because this is a demonstration and eventually you want to sell it to somebody and he has to have to confidence. I am not going to dwell on that. The third point here is with regard to char burning with the devolatized coal. When you look at the volatile frations of Indian coal, you can't look just at the volatile percent of Indian coal and the U.S. coal. You have to look at the petrography and see what the vitrinite content is, and what the inertinite content is, because volatiles are very important. One of the big problems in trying to burn char is trying to keep some amount of volatiles in order to keep the bed temperatures in sustained combustion. But people are only looking at devolatized char combustion. In fact, tests have been conducted in the US and I believe it is possible to burn devolatized char in FBC. One other comment that came up with regard to fines is that a certain amount of fines, perhaps a 10-15% fines content, is both inevitable and very good. You want to have fines because they act as cushions between the coal particles and give it more time for complete burn out. In the Indian context, it makes even more sense to not to have to eliminate the fines completely because you don't necessarily operate the bed at higher

temperatures compared to what you operate in the US. When you have high temperatures, such as those being used in the BHEL boilers, you can get complete burn out. In fact, the combustion efficiency reports at BHEL are at least a point or two higher than what we see in the US because you have the distinct advantage of being able to go to higher bed temperatures. You have exploited this in the right direction, so we have to get this.

C. In the case of a PF boiler, and an AFBC boiler, we got the fly-ash from the fluidized bed boilers analyzed it for their resistivity and sent the samples to our collaborators. They have analyzed the resistivity and confirmed the solubility of ESP for AFB applications. It is not making a difference in terms of the size of the ESP. Had we gone for the PF, we would have gone with the same size ESP. So there really is no economic advantage in a different system. Based on this feedback, and what others have also confirmed, they have offered ESP for FBC installations in Europe. Based on this bottom ash system we have offered for commercial systems with the high efficiency dust collection systems, we are only giving electrostatic precipitators. That is including the 10 MW plant at TELCO, the VESCO paper mill 60 tons/hour boiler, and the 150 tons/hour boiler. Of these three, two are expected to go into operation in mid-1986. When we considered a 30 mw plant, as an add-on in an existing operation, we found that there was a space restriction in general. We studied three or four sites. In general, this is a problem when going for an ESP; there is a space restriction, but when using a bag filter, that gives us an advantage. Consider this option in case of an add-on.

C. I have a small point to make with respect to the fines. I feel the problem of fines cannot be so generalized. The fines and reactivity of the coal goes to a certain point. For example, in the case of lignite, when you were testing the lignite we got from Italy, it had a large amount of fines. We are thinking that we are going to end up with lower combustion. But on the contrary; it turned out that we got the highest combustion efficiency with lignite in the order of 96-98%. That is because of the high reactivity of the lignite. I feel that the kind of coal and the fines has to be looked at together.

STUDIES IN RELATION TO BENEFICIATION OF SMALL COAL IN DENSE MEDIUM CYCLONE

A.K. Chakravarti
Central Fuel Research Institute
Dhanbad, Bihar, India

STUDIES IN RELATION TO BENEFICIATION OF SMALL COAL IN DENSE MEDIUM CYCLONE

A.K.CHAKRAVARTI
Central Fuel Research Institute,
P.O. FRI, Dist-Dhanbad, Bihar.
INDIA, 828108

I. INTRODUCTION

1.1 In order to increase the yield of clean coal to be available by beneficiation of Indian coking coals having extremely difficult cleaning characteristics, crushing the raw coal to smaller size prior to beneficiation is essential which permits higher release of coal particles. Dense Medium Cyclone washer has been well established as the most efficient tool for small coal upgrading, particularly when the coals are very difficult to wash. Till now, the bottom size of coal fed to dense medium cyclone is 0.5 mm and there are activities in many countries of the world for lowering the bottom size. to 0.15 mm, so as to feed high proportion of coal to the D.M.Cyclone for beneficiation.

1.2 A project on beneficiation of coking coals of India in D.M.Cyclone after crushing to relatively smaller size has been taken up at the Central Fuel Research Institute, Dhanbad, as a USAID-GOI Project with a view to study the performance of D.M.Cyclone with fine coal under various operating conditions. The present paper gives the progress made in the project and presents some of the data generated in the study.

2.0 PROGRESS OF THE STUDY

2.1 A Dense Medium Cyclone washing pilot plant has been set up departmentally at the Central Fuel Research Institute, Dhanbad (Fig. 1 to 3). The circuit comprises

the following :-

i) Structure with three floors.
ii) Wilfley slurry pump constructed of Nihard cast iron, capacity 300 g.p.m. head 110 ft. of water.
iii) 8" diameter D.M.Cyclone of Heyl Patterson make.
iv) Pulp tank for storin mixture of dense medium (magnetite in water) and the coal to be treated, capacity 120 gallons, M.S. construction.
v) Two movable sample collecting chutes.
vi) Two sample receives.
vii) Pipelines, pressure gauge
viii) Sweco sieving machine (US supply) for separating magnetite medium frommthe D.M.Cyclone products.

2.2 Dry ground magnetite has been received in bulk from the market. Such magnetite is being used in many of the coal washing plants in the country. The properties of the magnetite are given in Table 1. It may be seen from the size analysis that the magnetite power is somewhat coarser in nature and, therefore, it requires size classification prior to use in Dense Medium Cyclone with a view to obtain fine size magnetite. The results of size classification of the magnetite in a 6 inch diameter cyclone is shown in Table 2. On size classification, the fineness of magnetite has been found to be increased with the increase in the stability towards settling by gravity. The stability index of the classified magnetite at various specific gravities of suspension are presented in Fig.4. It may be observed that high stability (90%) of the medium is achieved at a specific gravity of the suspension as low as 1.23. The stability of a medium has been determined by the following formulae :

$$\text{Stability \%} = \frac{\text{Sp.Gr. of the upper 1/3rd portion of the medium after 1 minute settling} - 1}{\text{Sp.Gr. of the original medium} - 1} \times 100$$

2.3 Coal characteristics

Two coking coals, one having high ash and the other with medium ash content have been selected from X seam of Jharia coalfield for carrying out the preliminary studies on dense medium cyclone. The coals were crushed to below 2 mm size and washability studies carried out on 2 mm-0.5 mm and 0.5 mm-0.15mm separately. The washability curves are shown in Figs. 5A, 5B and 5C.

It may be observed that the one coal is having very high ash i.e. around 40% and the other around 30%. Both the coals are having moderately difficult washing characteristics.

3.0 STUDIES IN DENSE MEDIUM CYCLONE

3.1 The 8" diameter H 1 Patterson Cyclone has been received from U.S.A. last week which is under installation. Systematic tests as per scheduled programme will be undertaken as soon as the said cyclone is fitted in the plant which is otherwise complete in all respects.

3.2 In the meantime several experiments have been made on the performance of dense medium cyclone on comparatively finer size of Indian coal using a 6" diameter dense medium cyclone already existing in the Institute.

The following tests were made:

i) 2 mm-0.5 mm feed size of high ash coal at 5,10,15 &20 lbs/sq.inch feed pressure.

ii) 2 mm-0.5 mm feed size of medium ash coal at 5,10,15 & 20 lbs/sq.inch feed pressure.

iii) 0.5 mm-0.15mm feed size of medium ash coal at 5,10,15 and 20 lbs/sq. inch feed pressure.

The partition curves of the three sets of experiments are presented in Fig.6 to Fig.8. The performance criteria are given in Table 3.

The following observations are made:

i) Sp.Gr. of cut is considerably higher than the sp.gr. of suspension.

ii) Sp.Gr. of cut is higher with higher feed pressures.

iii) E_p value increases with the increase in the suspension gravity.

iv) E_p value is higher for finer feed sizes.

v) Feed pressure around 10 lbs/sq.inch gives lower E_p value for a 6" diameter D.M.cyclone.

vi) Sp.Gr. of cut is higher for finer size ranges of feed coal for the same specific gravity of suspension.

Acknowledgement

The author expresses his heartfelt thanks to the team members of the project, i.e. Sri S.K.Mitra, S.Sakha, S.K.Ghosh, N.P.Das, P.K.Mazumdar, S.K.Mitra(Jr) Scientists for their valuable assistance in the work and in making the paper.

TABLE- 1

Properties of Magnetite medium

A. Size analysis

Size in mm	Wt%
Plus 0.152	Nil
0.15-0.076	1.8
0.076-0.053	15.4
0.053-0.044	7.1
0.044-0.030	27.7
0.030-0.010	34.0
Below 0.010	14.0
	100.0

B. Density of magnetite powder

Density- 4.2

C. Magnetics content

Magnetics %	81.8
Non magnetics %	18.2
	100.0

D. Stability of suspension at 1.45 S.G.

Stability Index- 91.6

E. Viscosity of suspension at 1.45 S.G.

Viscosity- 4.8 cp

TABLE 2

Results of size classification of raw powdered magnetite

(6" dia cyclone was used which was operated at 5 p.s.i.8 pressure)

A. Weight %

i) Overflow.. 28.0

ii) Underflow.. 72.0

B. Size analysis

i) Overflow :..

Size	Wt%
300 mesh	2.3
300-350 mesh	1.1
-350 mesh	96.6
	100.0

ii) Underflow :

Size	Wt%
+ 200 mesh	3.8
200-300 mesh	11.0
300-350 mesh	5.5
-350 mesh	79.7
	100.0

C. Stability

i) Overflow

Sp.Gr.	Stability
1.163	75.5
1.20	88.2
1.285	93.0
1.376	94.4

ii) Underflow

Sp.Gr.	Stability
1.22	27.3
1.37	32.4
1.42	85.4
1.72	93.1

TABLE 3

Performance criteria of D.M.Cyclone** tests

Details of sample	Feed size mm	Ash%	Feed pressures lb/sq.in	S.G. of suspension.	S.G. of separat-ion.	E_p	Organic efficien cy*	Cleans Wt%	Cleans Ash%	Sinks Wt%	Sinks Ash%
Kusunda X seam coal crushed to below 2 mm	2-0.5	40.0	5	1.45	1.648	0.041	74.0	43.8	20.6	56.2	55.1
	"	"	10	"	1.820	0.065	88.9	59.1	23.0	40.9	64.6
	"	"	15	"	1.896	0.072	93.0	67.0	24.9	33.0	70.7
	"	"	20	"	1.990	0.075	82.4	61.0	25.6	39.0	62.5
Block II OCP	2-0.5	29.8	5	1.35	1.500	0.034	97.0	32.0	13.2	68.0	37.6
	"	"	10	"	1.549	0.030	86.2	43.1	17.4	56.9	40.2
	"	"	15	"	1.620	0.055	89.4	55.4	19.5	44.6	42.6
	"	"	20	"	1.700	0.044	92.0	71.0	22.4	29.0	47.9
-DO-	0.5-0.15	24.6	5	1.35	1.779	0.096	98.2	85.5	20.1	14.5	51.2
	"	"	10	"	1.840	0.055	99.5	89.6	21.0	10.4	55.6
	"	"	15	"	1.905	0.017	97.5	89.3	21.7	10.7	57.2
	"	"	20	"	1.944	0.111	99.5	93.6	22.3	6.4	58.4

* on reconstituted feed basis.

** 6" dia cyclone, 20° cone angle, feed inlet 1½", overflow aperture 1½", apex aperture-15/

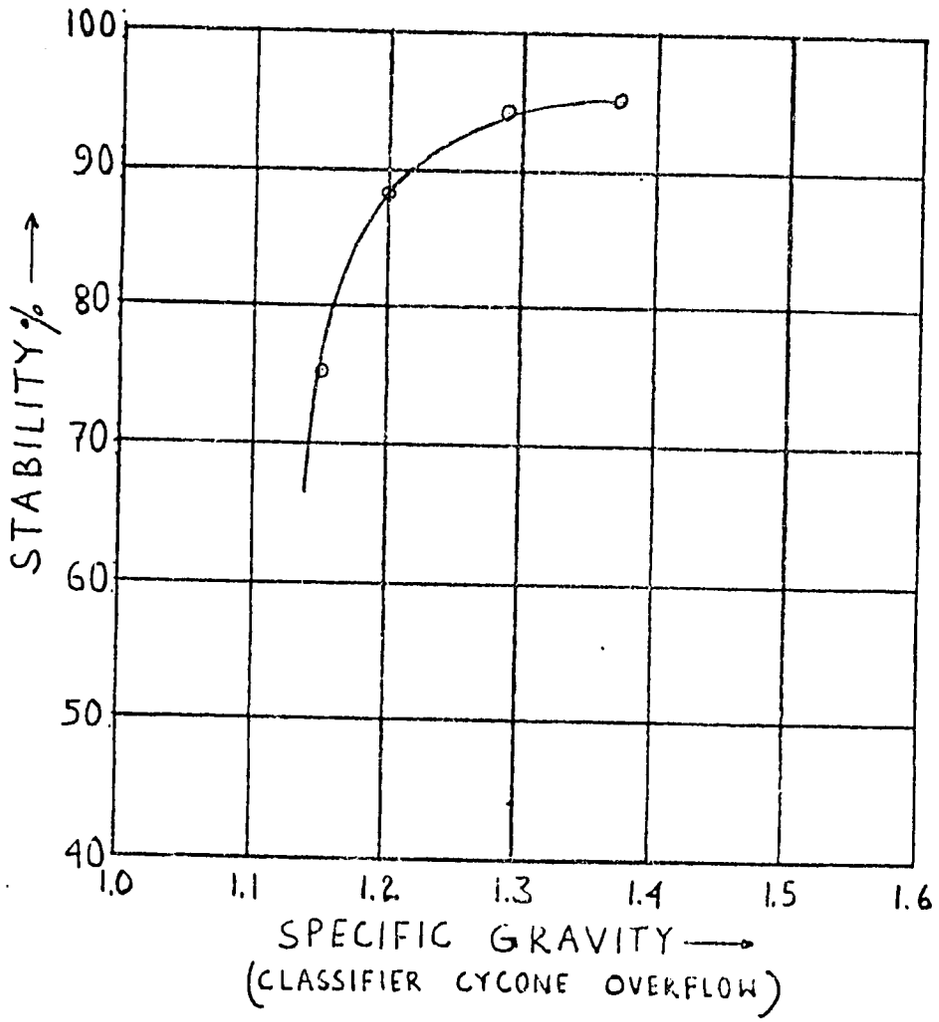
100
90
80
70
60
50
40
STABILITY % →
1.0
1.1
1.2
1.3
1.4
1.5
1.6
SPECIFIC GRAVITY →
(CLASSIFIER CYCONE OVERFLOW)

FIG. 4

2-0.5mm (9-30 mesh)

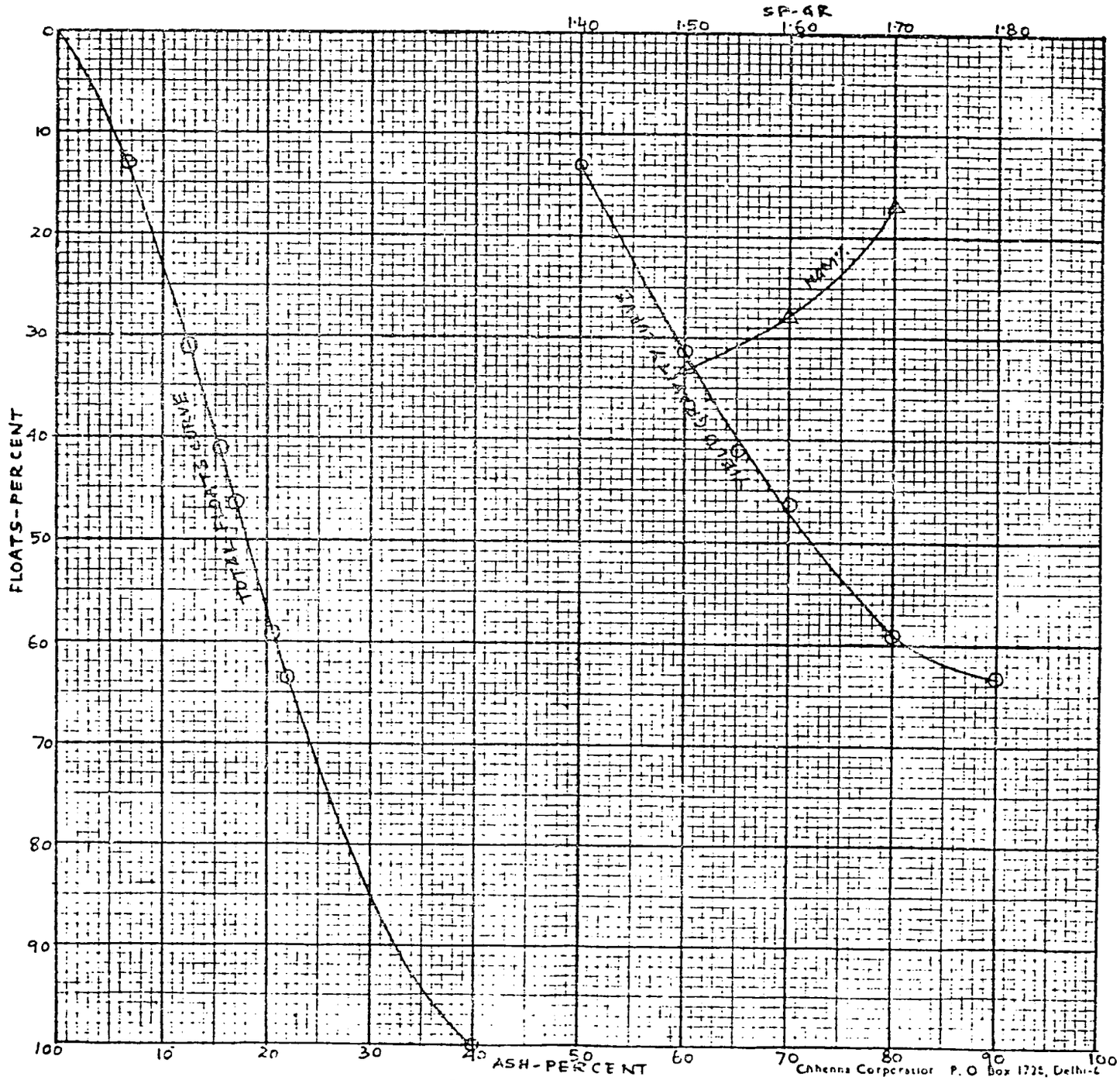

FIG 5A

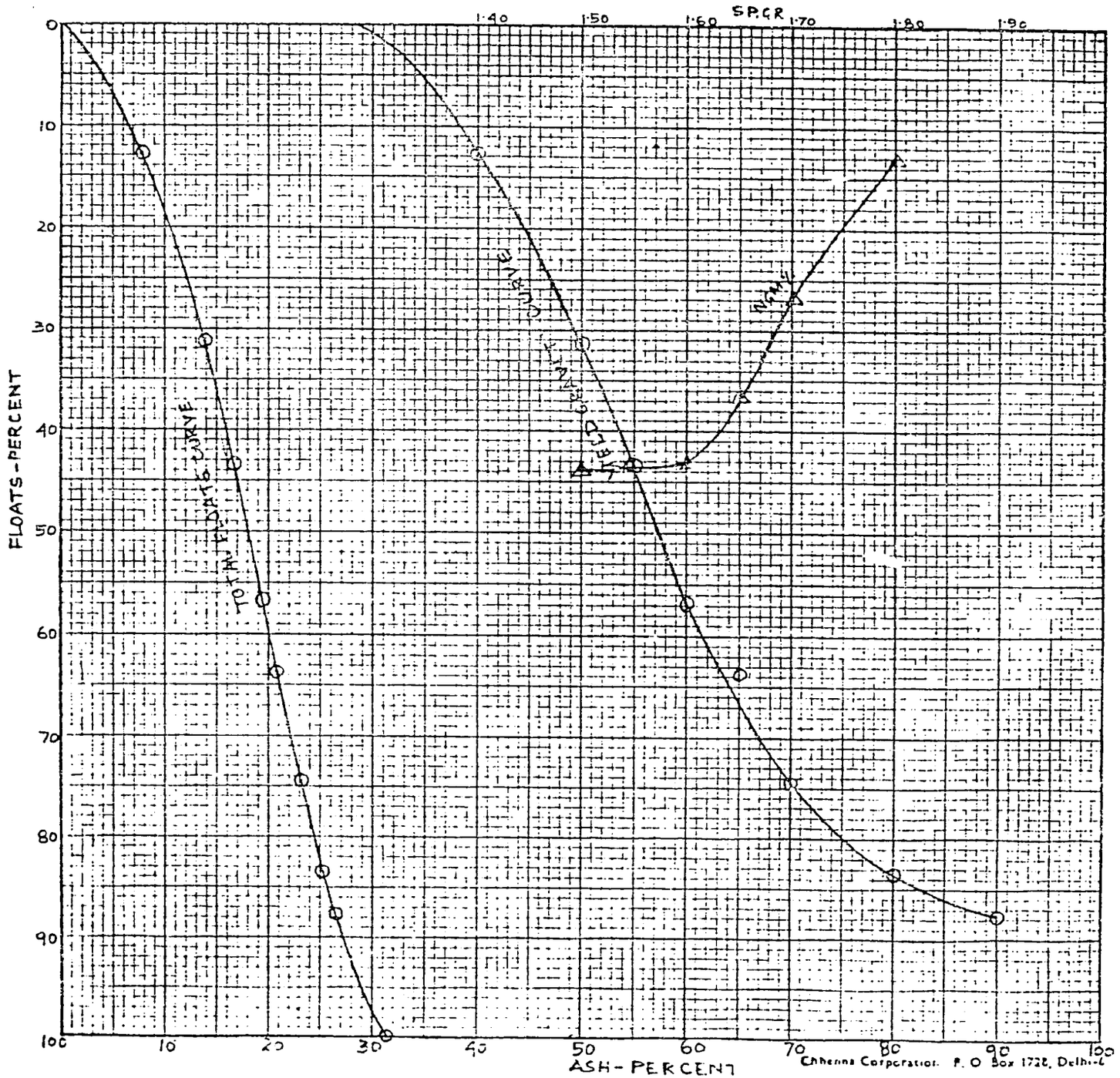
SP.GR
1·40
1·50
1·60
1·70
1·80
1·90
FLOATS-PERCENT
0
10
20
30
40
50
60
70
80
90
100
ASH-PERCENT
10
20
30
40
50
60
70
80
90
100
TOTAL FLOATS CURVE
WEIGHT CURVE
Chhenna Corporation. P. O Box 1728, Delhi-6

FIG. 5B

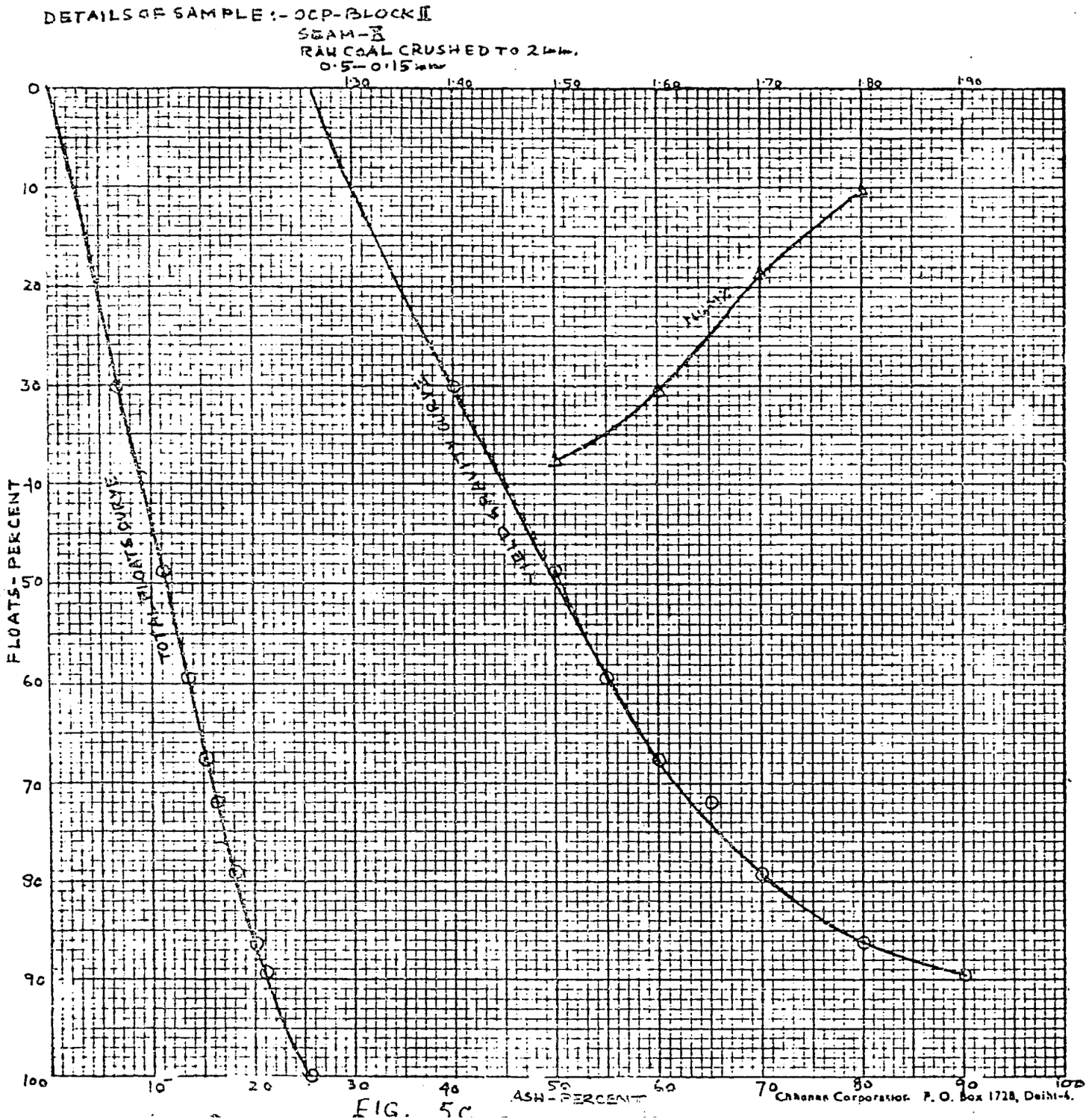
DETAILS OF SAMPLE :- OCP-BLOCK II
SEAM-B
RAW COAL CRUSHED TO 2 mm.
0·5—0·15 mm
FLOATS - PERCENT
ASH - PERCENT
TOTAL FLOATS QUANTITY
TOTAL FLOATS QUALITY
Chhanna Corporation P. O. Box 1728, Delhi-6.

FIG. 5c

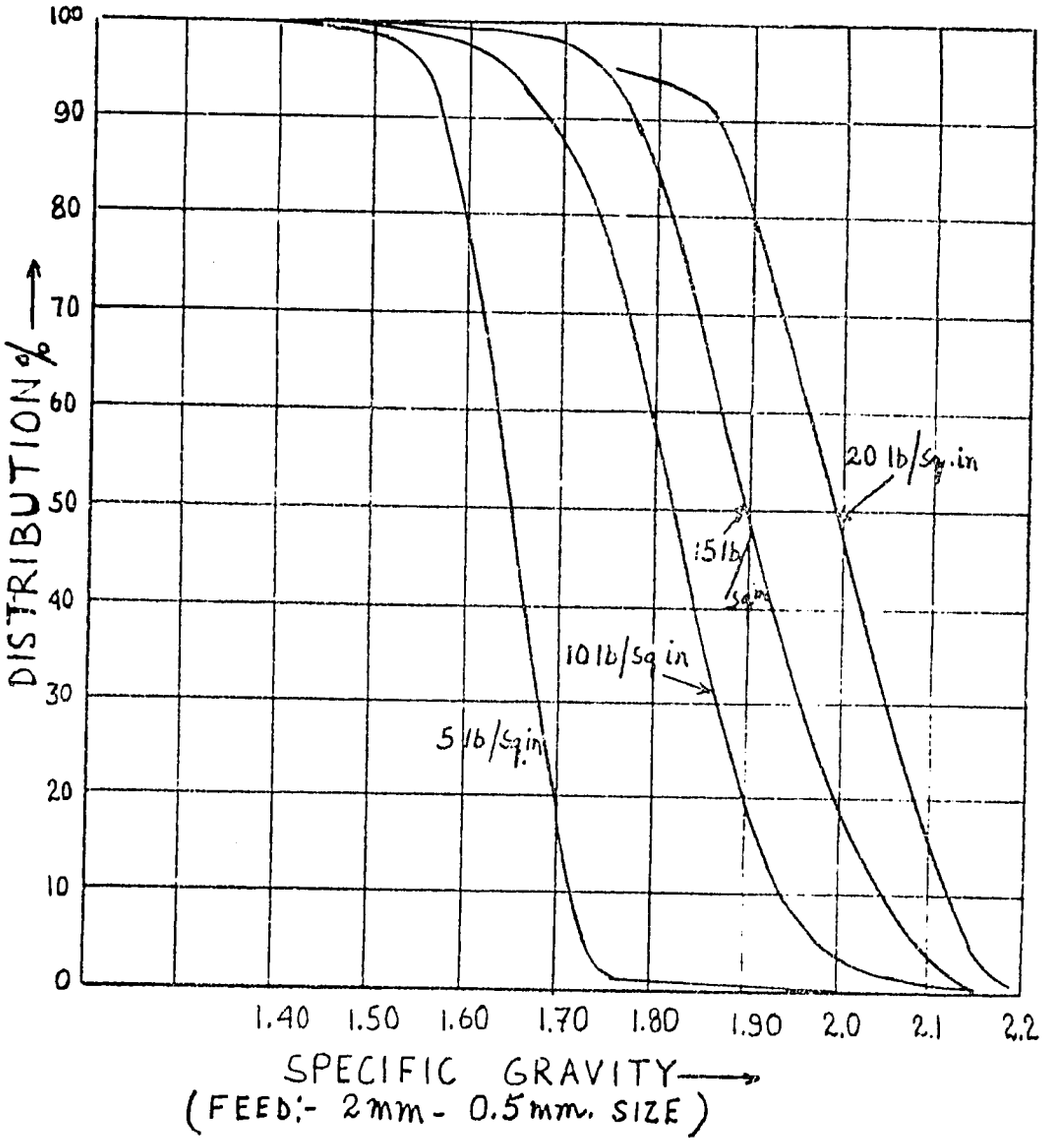
100
90
80
70
60
50
40
30
20
10
0
DISTRIBUTION% →
20 lb/sq.in
15 lb/sq.in
10 lb/sq in
5 lb/sq in
1.40
1.50
1.60
1.70
1.80
1.90
2.0
2.1
2.2
SPECIFIC GRAVITY →
(FEED:- 2mm - 0.5mm. SIZE)

FIG. 6

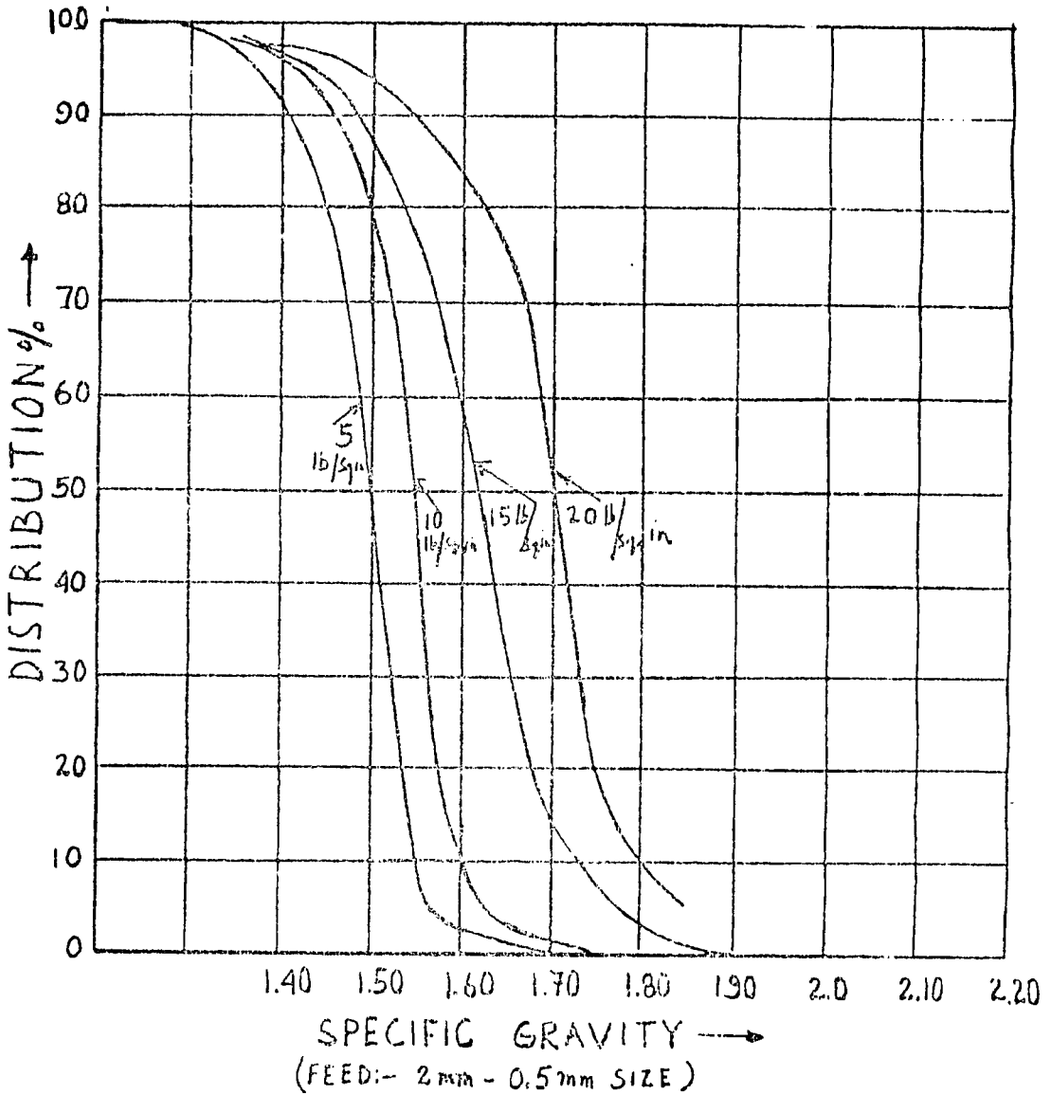
100
90
80
70
60
50
40
30
20
10
0
DISTRIBUTION% →
5 lb/sq in
10 lb/sq in
15 lb/sq in
20 lb/sq in
1.40
1.50
1.60
1.70
1.80
1.90
2.0
2.10
2.20
SPECIFIC GRAVITY →
(FEED:- 2mm - 0.5mm SIZE)

FIG. 7

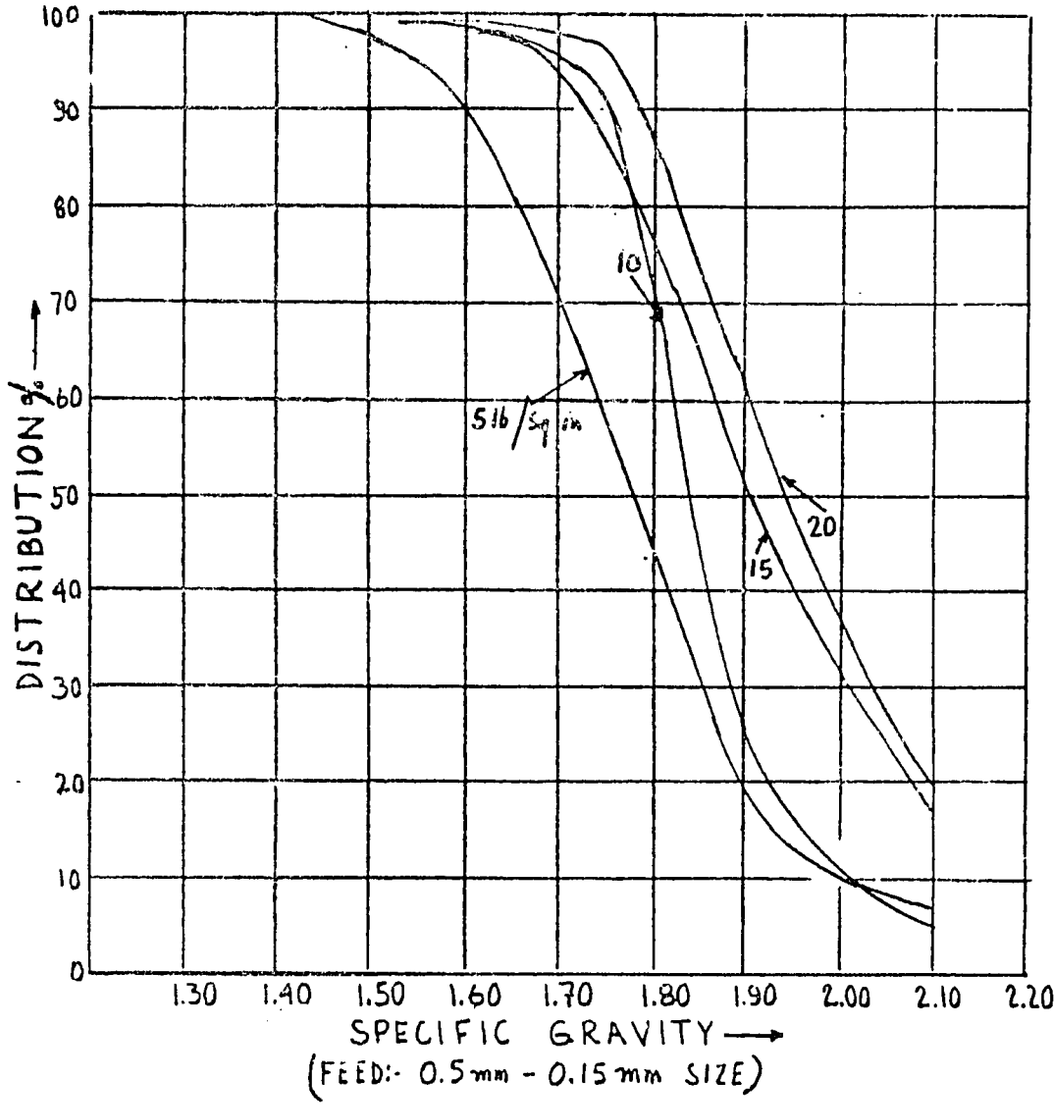
100
90
80
70
60
50
40
30
20
10
0
DISTRIBUTION % →
1.30
1.40
1.50
1.60
1.70
1.80
1.90
2.00
2.10
2.20
SPECIFIC GRAVITY →
(FEED:- 0.5mm - 0.15mm SIZE)
10
5 lb/Sq in
20
15

FIG. 8

HOT GAS CLEANUP
BHEL'S PROGRAM ON GRANULAR BED FILTER (GBF)

R.S. Rangan

Hot Gas Cleanup Systems Project
Energy Systems Group, Corporate R&D Division
Bharat Heavy Electricals Limited
Hyderabad, India

HOT GAS CLEANUP

BHEL'S PROGRAMME ON GRANULAR BED FILTER (GBF)

HOT GAS CLEANUP SYSTEMS PROJECT
ENERGY SYSTEMS GROUP, CORPORATE R & D DIVISION
BHARAT HEAVY ELECTRICALS LIMITED
HYDERABAD - 500 593.

DECEMBER, 1985.

ABSTRACT

A research and development project for the design and development of a Granular Bed Filter (G B F) System was initiated by Bharat Heavy Electricals Limited (B H E L). This is intended for application in the coal based combined cycle plant being developed by BHEL. US agency for International Development are presently funding a part of the instrumentation requirement for this project. The G B F system has been designed by the Energy Systems Group of BHEL, Hyderabad, to be tested at their Coal R&D facility. This paper describes the objectives, project schedule, current status, design details etc. of the G B F alongwith its auxiliary systems and instrumentation and control.

1.0 INTRODUCTION AND BACK GROUND

The need to develop/test HTHP particulate separation systems is consequent to BHEL's programme to implement coal based combined cycle plants for power generation in India. Systems for coal gasification as well as combustion under pressure are being developed for testing in the combined cycle mode. After a study of various gasification systems in the light of existing state of art and developmental time required, BHEL went in for a moving bed gasifier based combined cycle plant for the purpose of technology development and demonstration. The plant capacity selected was 6 MWe. After tests with the moving bed gasifier based combined cycle plant are complete, it is planned to operate this facility with a pressurised fluid bed combustor and also a pressurised fluid bed gasifier. It is proposed to introduce HTHP particulate separation systems during this stage of development. Reliable operation of gas turbines is related to particulate loading and its size distribution and the chemical composition of the expansion gas; erosion is caused by particles in the range of 2 microns and above; particles below 2 microns tend to cause deposits which may be corrosive in the presence of alkali metal salts.

remove dust fractions of larger sizes almost completely and as such more of fine dust may be permitted in the expansion gas. Since such fine dusts do not contribute much to erosion, the future specifications will most likely include an allowable size distribution of the dust.

HTHP dust separation systems which can simultaneously meet Gas Turbine and environmental requirements, obviating the need for downstream clean-up, are likely to have a cost advantage in the commercialisation of coal based combined cycle power generation. With this in view a HTHP particulate separation test facility is being set up by the Energy System Group of BHEL at their Coal R&D facility at Hyderabad Various concepts are likely to be attempted in this experimental loop and to begin with a Granular Bed Filter System has been designed for experimental operation. Details of this facility are described in this paper.

2.0 PROJECT OBJECTIVES:

This project aims to create a High Temperature and High Pressure experimental loop downstream of a Pressurised Fluid Bed Combustor for the following objectives.

- Design, fabricate and commission a well instrumented test loop for evaluation of HTHP particulate separation systems.

- Design, fabricate and commission a Granular Bed Filter System for a rated capacity of 1075 m^3/hr at 5 ata, 900°C along with its auxiliary equipment.

- Obtain data on particulate collection efficiency at different operating conditions.

- Establish a continuous granule cleaning system by means of a pneumatic loop and a dust disengagement vessel.

-. Correlate experimental data in terms of the design and operating parameters for performance prediction and scale up to larger systems.

(To meet the *ed objective USAID has consented to provide for a limited number of special instruments and a Data Acquisition System).

3.0 PROCESS DESCRIPTION AND GENERAL ARRANGEMENT:

A Pressurised Fluid Bed Combustor test rig capable of burning upto 300 kg/hr. of coal will provide hot gases at 5 atm and 900°C. The PFB plant consists of a pressurised coal feeding system with lock hoppers, a 422 mm I.D. pressurised combustor with in-bed heat transfer tubes which help to extract a major part of the heat released in the combustor. The combustor is provided with an overflow ash discharge system for bed height control. This consists of an overflow ash tube and ash fluidiser with a slurry ash discharge system. The ash fluidiser controls bed level and can be used to influence the ash carry over from the combustor. The combustor exit gases enter the primary cyclone from where the gases are taken to the HTHP particulate separation test facility for further cleaning.

The HTHP particulate separation test facility will consist of a high efficiency cyclone separator, granular bed filter with its associated solid recirculation system and a bag house for separation of dust carried over by the transport air. The hot gases from the primary cyclone outlet will pass through the second stage high efficiency cyclone before entering the granular bed filter. Compressed air will be used for recirculation of granular media, wherein it will be used to transport the media as well as to separate the dust from the filter media. The dust carried over by the transport air will then be cleaned in the bag-filter and routed to the combustor air plenum with an option for venting. The flow schematic is shown in Fig.1.

In the GBF design of BHEL, particle collection is accomplisl by causing the particle laden gas to move radially inward in cross-flow through an annulus of granular collecting materials. The granular solid is in fact a moving bed and filter media recirculation is achieved by means of pneumati transport. It is expected that the dust particles collecte and deposited on the granules will be separated during the transportation process. The air/gas used for pneumatic transport is then routed through an auxiliary conventional cleaning system. It is planned to control the media recirculation through a L-valve.

Two different configuration of filter elements both having the same outside diameter and an overall filter bed thickness of 200 mm are to be tested in sequence. Provision has been made in the design for varying the effective filter height to obtain superficial velocities in the range of 0.38 to 0.76 m/s. The pressure vessel will be adequately lined with refractory and insulation material to obtain a shell temperature of around 200°C.

4.0 SYSTEM/EQUIPMENT DETAILS

4.1 Design of pressure boundary:

The pressure vessel design is based on the ASME, Boiler and Pressure Vessel Code, Section VIII Div.I. The material selected is ASTM A 515 Gr.70. The pressure vessel consists of two torispherical heads and a shell course. A final flanged joint is located at the top portion of the vessel. The hot dirty gas inlet is from the side and the clean gas outlet is from the top, and the granular media enters the vessel from top and is removed for cleaning from the vessel bottom. The inside of the vessel is lined with castable refractory and insulation.

4.2 Design of internals:

The choice of material for such application is restricted severely due to the fact that the design temperature for

the internals is 900°C. Very few alloys can meet the requirements of strength and resistance to scaling at this high temperature. The choice ultimately reduces to wrought alloys such as RA 333, Incoloy 800H, Hastealloy X and cast steel as HK-40 alloy. Each has got its own merits and demerits as regard to availability, strength, scaling resistance, welding and fabrication problems etc.; considering these points, cast HK-40 alloy has been preferred over 800 H, RA 333 and Hastealloy X since availability of these alloys are increasingly difficult in that order.

A detailed stress analysis was carried out using SAP IV programme which showed that the stress due to thermal expansion at different restrained points in the earlier design was very large and cannot be tolerated.

The thermal expansion problem has been solved by making the equipment an undirectional expanding type whereby the entire expansion is accommodated by a telescopic joint at the bottom.

The equipment can be used to test two types of filter elements simply by changing a small section of the internals thereby avoiding duplication of the entire vessel.

4.3 Filter media recirculation loop:

The recirculation and cleaning of the dirty media is proposed to be carried out by means of a pneumatic transport system. For a given inlet dust load, the pressure loss across the filter bed is a function of the dust load carried by the media, which increases over the height of the filter element. Published experimental results point to an optimum dust loading in the filter media in the range of 3.5 to 7 gms/kg of filter media, for pressure drop to be maintained in the desired range. The recirculation loop parameters are described in fig.2. These parameters form the basis of estimating the recirculation rate of granules and the air supply required to operate it. The control over the

recirculation rate is to be achieved by a L-valve in the recirculation line. The dirty media flows through the downcomer, L-valve and the lift line before being carried into the disengagement vessel from where the media falls back into the element. The dust gets elutriated out and this is separated in a bag filter. The pneumatic solid recirculation loop design is based on choking velocity correlations and it is ensured that the operating velocity in the liftline is maintained above the calculated choking velocity.

4.4 Disengagement vessel:

This vessel has been designed to elutriate the dust carried into it by the filter media and the proceoure adopted for design is as follows:

i) Calculate Umf at 5 ata, 250°C for known particle size;

ii) Operating velocity is chosen to be greater than 1.5 times Umf;

iii) Recheck to see that Uch is between Umf and the terminal velocity.

This vessel has an I.D of 200 mm and effective height of 610 mm. A 10mm thick baffle plate is provided at the top which partially partitions the vessel over a height of 210mm alongside the inlet spout.

4.5 Transport air filter:

This is a conventional bag filter provided with three nos. of SS filter bags of 150mm Ø and 1500mm length. The maximum inlet dust concentration is estimated to be 14 gms/m^3 and the filter is expected to be operated at an outlet dust loading of less than 50 mg/m^3. A double knife gate valve is provided for intermittent ash discharge.

5.0 TEST VARIABLES:

The testing of this unit will focus on the following major aspects:

i) Performance evaluation of the granular bed filter by variation of operating parameters in selected ranges on either side of design point.

ii) Data collection and evaluation to establish design correlations, to optimise major design parameters of the system.

iii) Design verification of the solid recirculation loop from experimental data.

iv) Long duration runs to prove the operational reliability of the system.

TABLE 1

MAJOR VARIABLES TO BE INVESTIGATED IN THE TEST PROGRAMME

SL. NO.	VARIABLE	Value/range
1.	Inlet dust concentration	1-2 gms/m^3
2.	Gas velocity	0.38 - 0.76 m/s
3.	Filter media size	1-3 mm
4.	Media recirculation rate	130-350 kgs/hr.

6.0 INSTRUMENTATION:

The system is designed to fulfil the following objectives:

- Continuous monitoring and control of process parameters;
- Measurement and recording of key performance parameters required for data analysis.

- Online gas composition analysis.
- Data acquisition system and processing of data for performance evaluation.

System operation will be continuously monitored. Pressure, temperature and flow of the hot gas are monitored before and after the GBF. Analysis points are provided on the gas line for monitoring the gas composition. The solid particulates are sampled and analysed, before and after the filter. The level of filter media inside the element is monitored by using a radio-active level transmitter. K-type thermocouples will be used for hot gas temperature measurement. E-type thermocouples will be used for measuring the temperature of dusty hot air and media lines. Pt 100 RTDs are planned for sensing the temperature in clean airlines. Venturi tube and DP transmitter type of arrangement with purging is proposed for hot gas flow measurement. Orifice and DP transmitter combination will be used for all airline flow measuring applications. Pressure and differential pressure will be measured using 2-wire electronic transmitter All the receiving instruments will be of electronic type. They will be mounted on control panel located in the control room. The controllers also will be of electronic type. However, the control valves will have pneumatic actuators with pneumatic positioner having built-in e/p converters.

A Data Acquisition system capable of performing the following tasks will be used.

a/ Continuous logging of values of various process parameters like temperature, flow, pressure, level, weight and gas compositions and on-line reduction of the data into respective engineering units.

b/ Logging and display of process operating data for each experimental run.

c/ Processing of data and computing performance characteristics of the system.

d/ Providing display of current data on demand.

e/ Providing print out of all required data and computed results.

7.0 PROJECT SCHEDULE AND CURRENT STATUS:

The following major tasks have been identified to carry out this project and the current schedule and status are given below:

TABLE 2

Task No.	DESCRIPTION	Start Date	Completion Date	Current Status
1.	Process Design of GBF and auxiliary systems	July'84	Dec.'84	Completed
2.	Documentation of process design and instrument specifications	Jan.'85	March'85	Completed
3.	Detailed specifications of instruments	Jan.'85	June '85	Completed
4.	Procurement of instruments by BHEL	July'85	June '86	Ongoing
5.	Detailed design and fabrication drawings for GBF, bag filter, cyclone II and recirculation system with D.V	July'85	Nov. '85	Completed
6.	Fabrication of Cyclone II, GBF, Bag filter and recirculation system with D.V	Feb.'86	June '86	Vendor identification in process
7.	Erection and commissioning	Oct.'86	March'87	

The schedules upto the stage of equipment fabrication and procurement of equipment and instruments are the same as indicated in the project proposal. The erection and commissioning of the system however is closely interlinked with the PFBC Project Schedule.

References:

1. Proposal for High Temperature and High Pressure particulate separation test facility - I.R-BHEL, March 1985

2. Energy Conversion Alternative Studies - Hamm J.R (NTIS N76-23694, 76)

3. Mechanism of metal removal by impacting dust particles Smeltzer, C.E (Tran. of ASME, Sept.1970)

4. Containment Control in Hot Coal Derived Gas Streams:

   Ed K.E. Markel, 1983

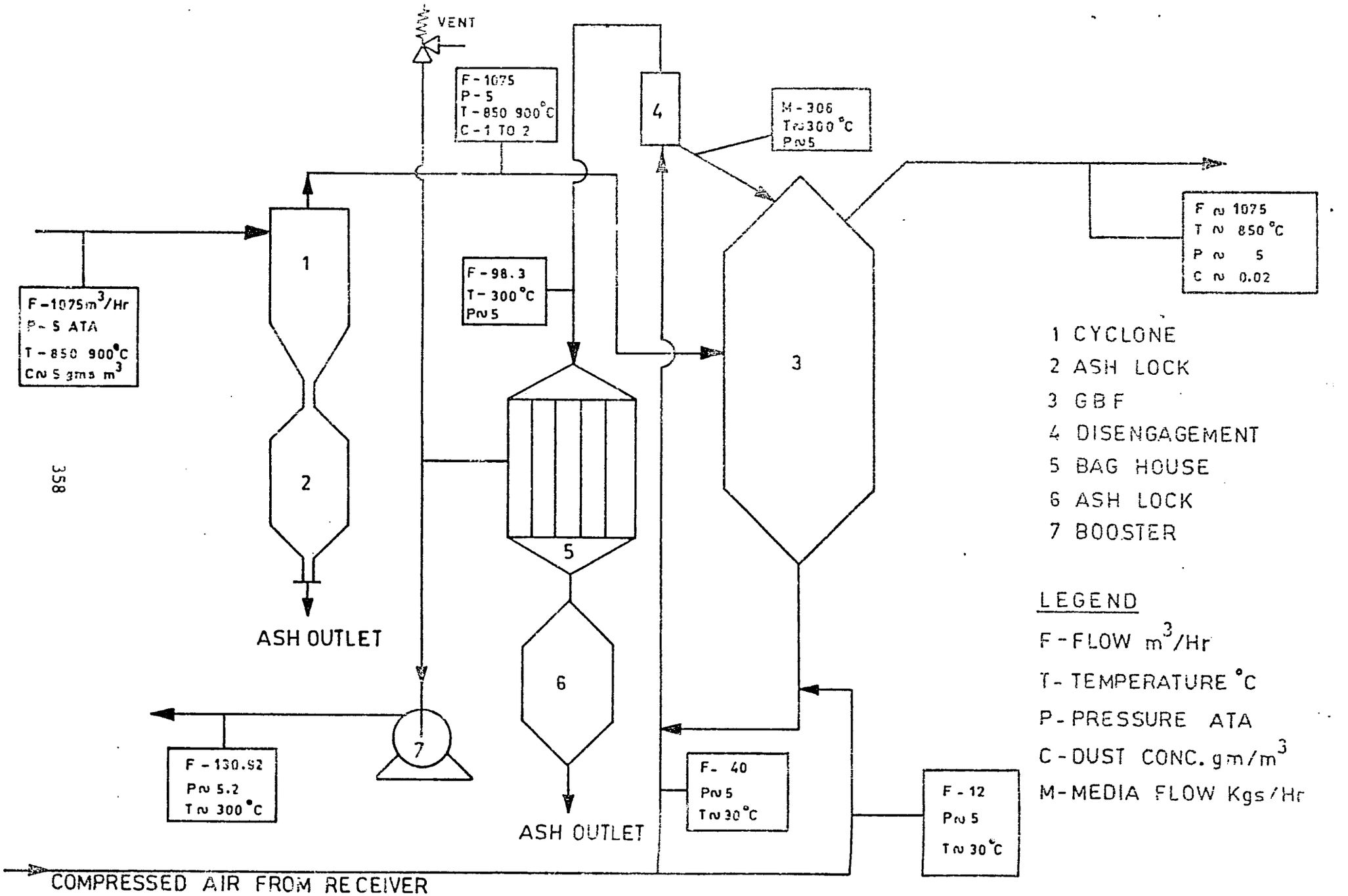

FIG. 1. PROCESS FLOW SCHEMATIC

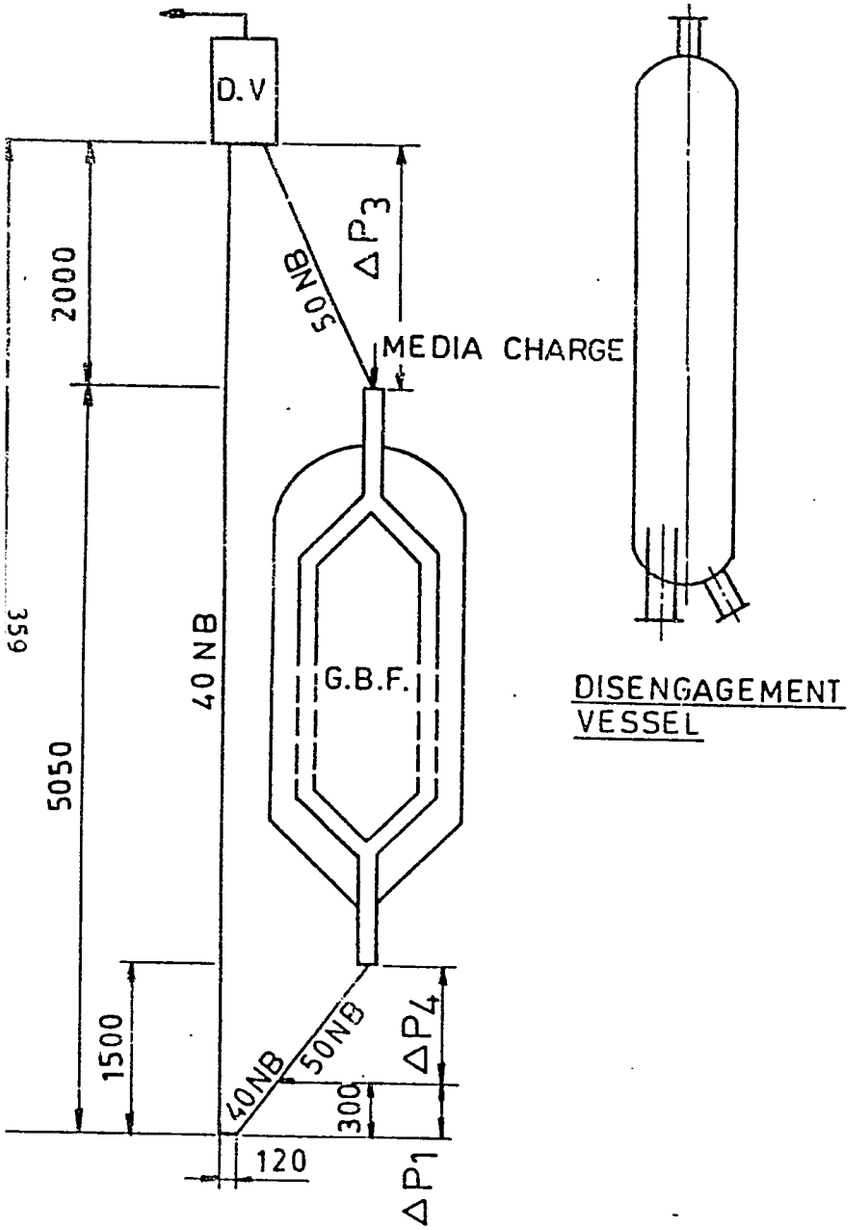

PRESSURE LOSS ESTIMATES (N/m^2)

ΔP_1 (L-VALVE) = 1049 N/m^2 (107 mm H_2O)

ΔP_2 (LIFT LINE) = 2775 N/m^2 (283 mm H_2O)

ΔP_3 (DISENGAGEMENT VESSEL) = 3099 N/m^2 (316 mm H_2O)

ΔP_4 (UPPER MEDIA LEG) = 2942 N/m^2 (300 mm H_2O)

ΔP_{TOTAL} = 9865 N/m^2 (1006 mm H_2O)

MEDIA CIRCULATION RATE = 306 Kg/hr

TEMPERATURE = 250°C

SYSTEM PRESSURE = 5 ata

GAS VELOCITY IN LIFT LINE = 12 m/s

L-VALVE AERATION FLOW = 12 $\frac{Am^3}{Hr}$ (MAX.)

TRANSPORT AIR ≈ 60 $\frac{Am^3}{Hr}$

FIG. 2. SOLID RECIRCULATION LOOP

SI. NO.	DESCRIPTION	SI. NO.	DESCRIPTION
1, 2	2" φ GATE VALVES	10	PRESSURE SWITCH
3	PRESSURE REDUCING VALVE 2" φ	11	TEMPERATURE SWITCH
4	DIFFERENTIAL PRESSURE GAUGE	12	TIMER FOR DISCHARGE VALVE
5	PRESSURE GAUGE	13	TIMER FOR PULSING VALVE
6	PRESSURE RELIEF VALVE	14	SOLENOID OPERATED DIAPHRAGM VALVE
7, 8	4" φ GATE VALVES		
9	SWITCHING CIRCUTE BY PASS SYSTEM		

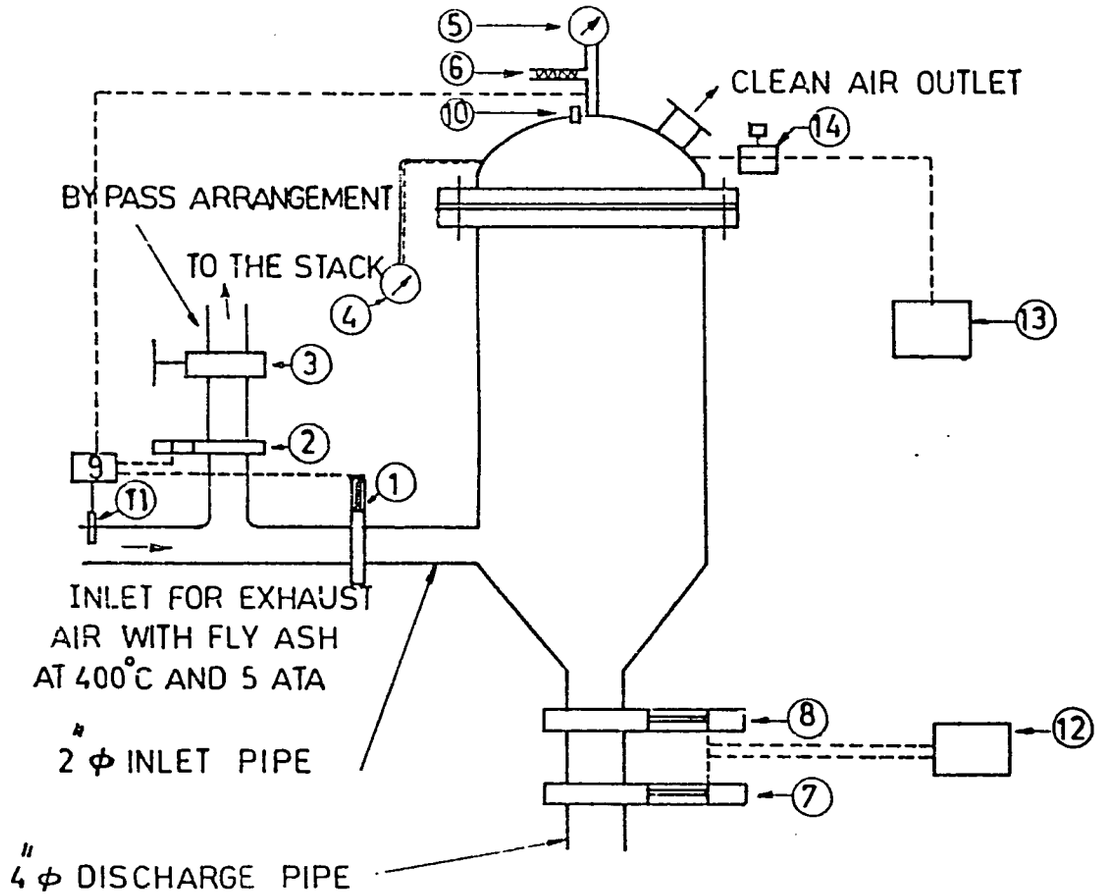

NOTE: ITEMS 9, 12, 13, ARE MOUNTED ON CONTROL PANEL

FIG. 3. TRANSPORT AIR FILTER

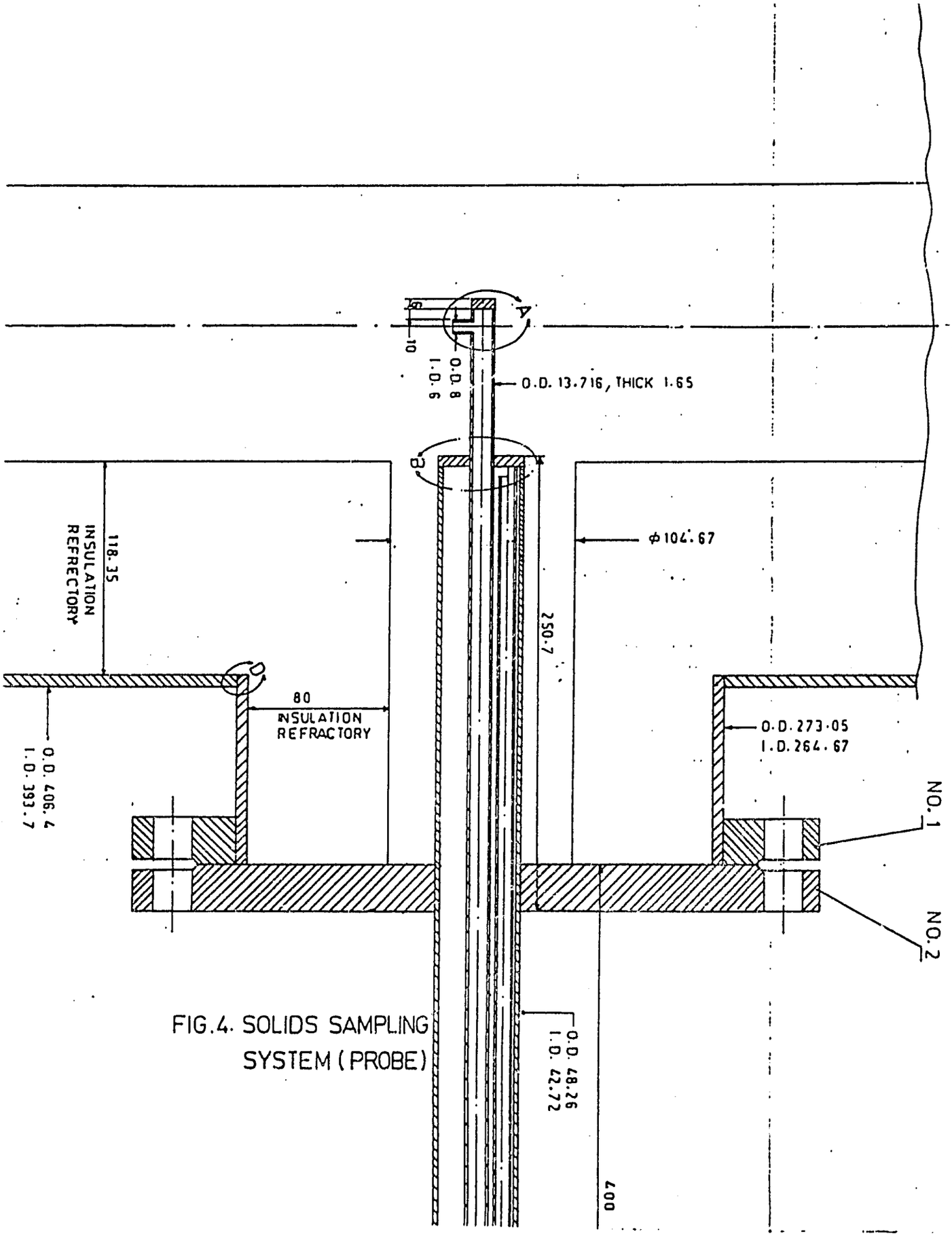

FIG.4. SOLIDS SAMPLING SYSTEM (PROBE)

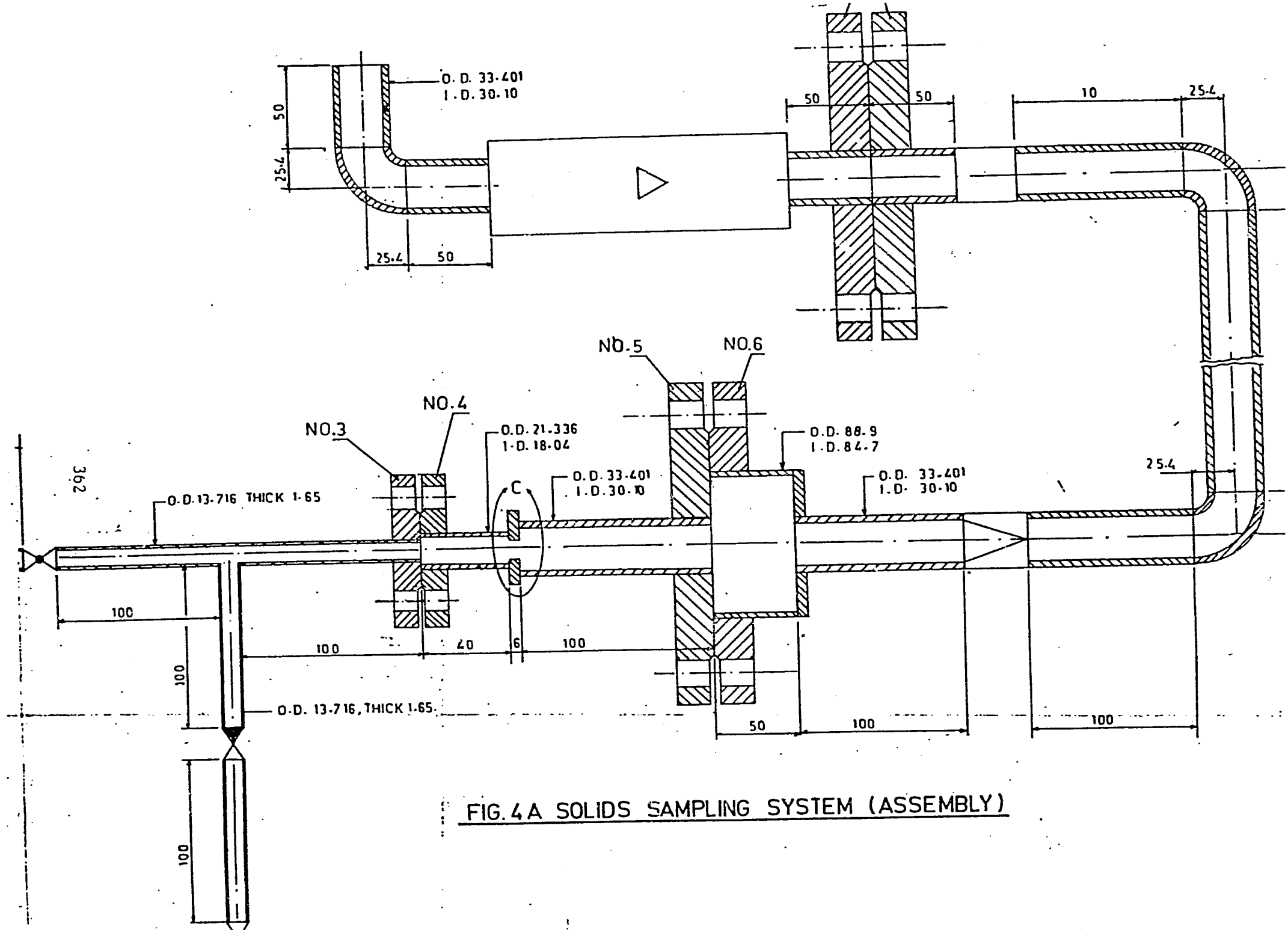

FIG. 4A SOLIDS SAMPLING SYSTEM (ASSEMBLY)

FIG. 5. PROPOSED FLUE GAS SAMPLING AND ANALYSIS SYSTEM (SCHEMATIC)

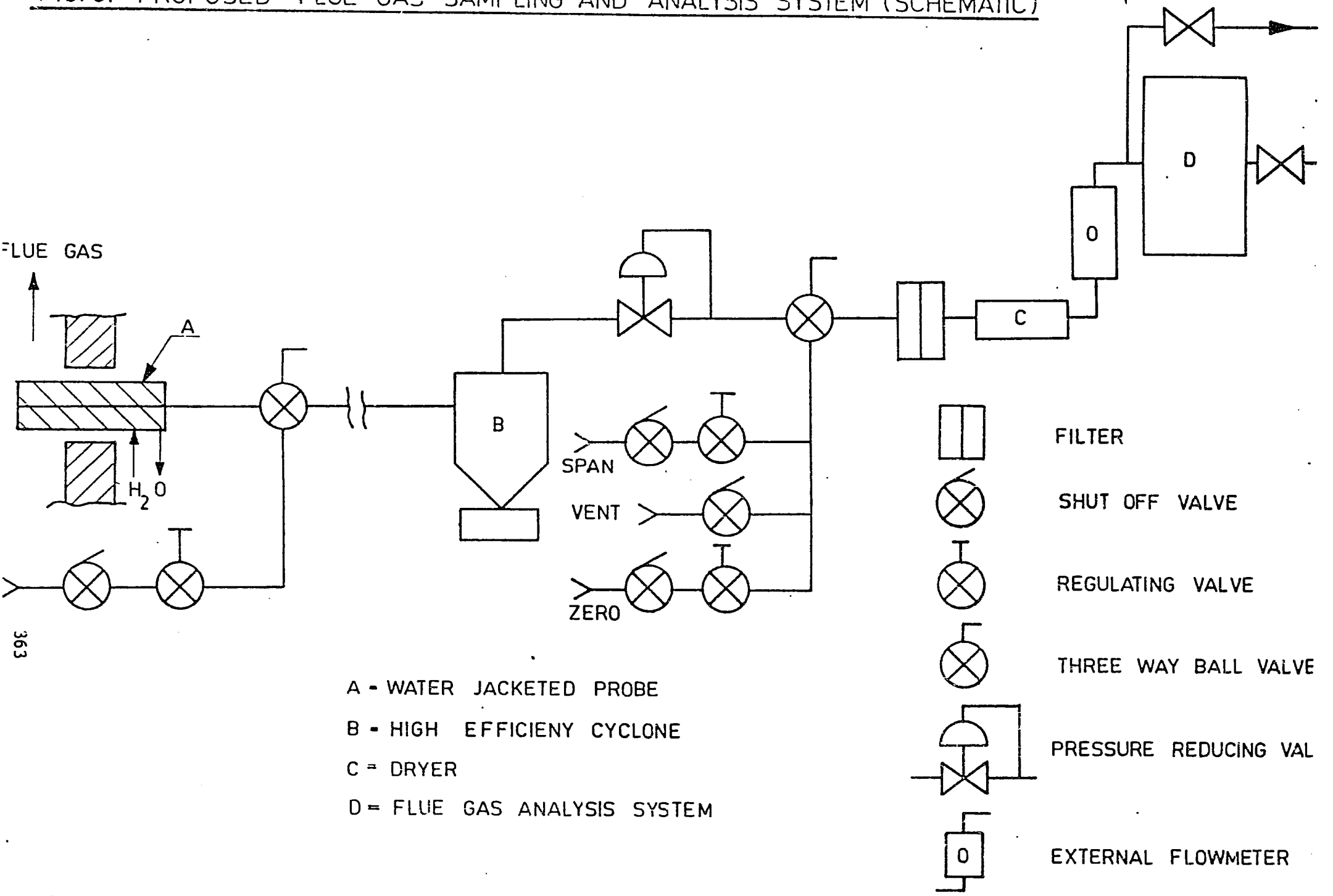

MATERIAL OF PIPE LINE: HIGH NICKEL ALLOY

MEDIA: SINTERED ALLUMINA

BULK DENSITY OF MEDIA: 2700 Kg/M^3

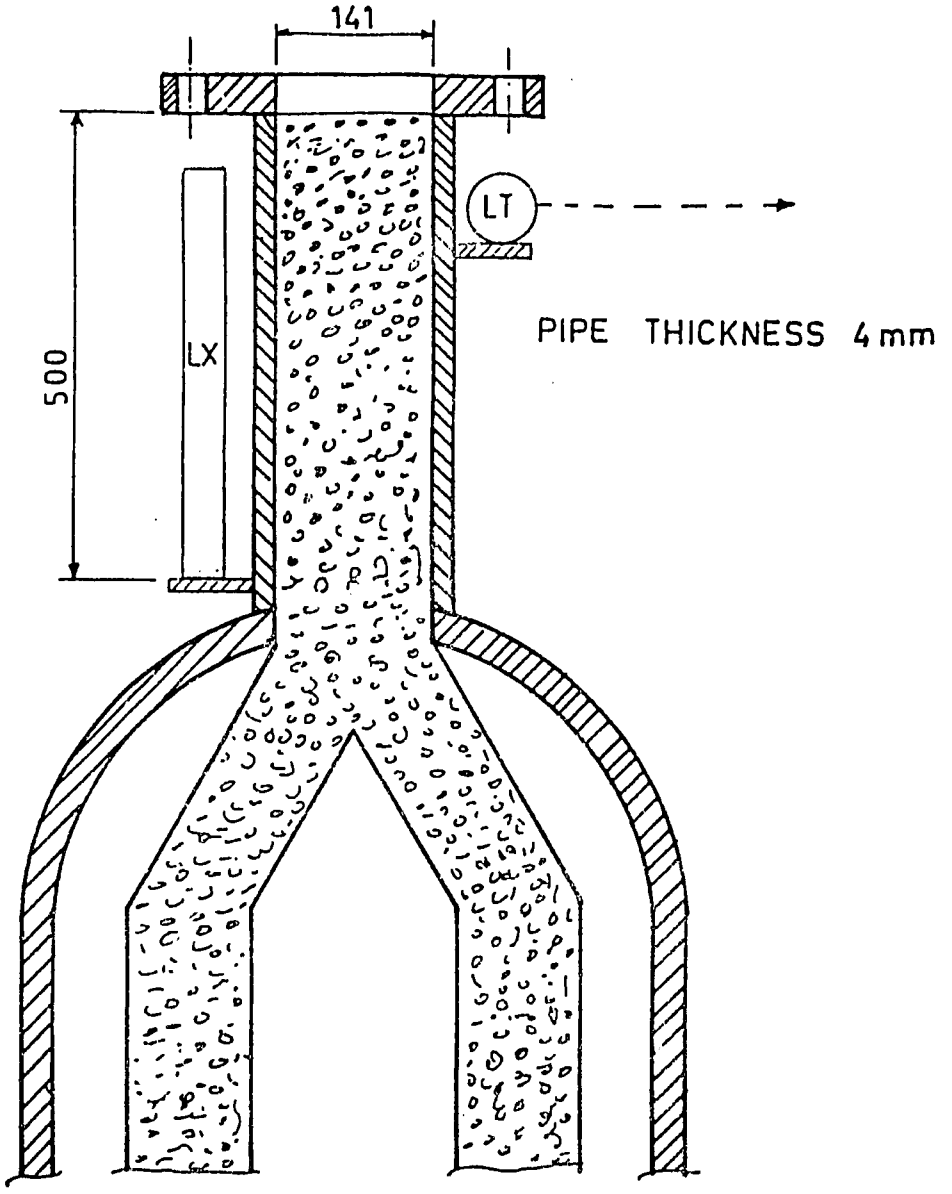

LX :- RADIO ACTIVE SOURCE CO_{60} OR CESIUM (ROD SOURCE)

LT :- RADIO ACTIVE LEVEL SENSOR (SCINTILLATION COUNTER OR GM TUBE ETC)

FIG. 6 INSTALLATION SCHEME FOR RADIOACTIVE LEVEL TRANSMITTER

SOME RECENT TRENDS IN COLD GAS CLEANUP

S. Narayan Reddy
R. Vaidyeswaran

Regional Research Laboratory
Hyderabad, India

SOME RECENT TRENDS IN COLD GAS CLEAN UP

S. Narayan Reddy and R. Vaidyeswaran
Regional Research Laboratory, Hyderabad-7

In a paper presented at the Second USAID-GOI Workshop on Alternative Energy Resources and Development held in February 1985 in New Delhi, one of the authors (RV) of present paper reviewed the state of art with regard to removal of particulates, sulphur compounds, alkali vapors from the gases obtained during gasification of coal. Subsequently the other author (SNR) visited USA to study the methods being investigated for the removal of acidic gases and impurities like sulphur compounds based on the discussion with the US team.

As stated in the earlier paper, the present practice of removal of CO_2 and sulphur impurities involves scrubbing of the gas with wet media leading to the gas being cooled to room temperatures. This is thermally not efficient as the sensible heat in the gas is lost and for many subsequent uses of the gas either for combined cycle power generation or shift conversion or methanation, the gas has to be reheated. Newer techniques based on absorptive, adsorptive and permeative methods are being developed. Some of these are reviewed in this paper.

Absorptive methods: Metal oxides like iron oxide, cobalt oxide, molten salts on suitable supports and certain type of polar organic solvents are being tried for desulfurization of gases to bring down the sulphur content to less than 1 ppm. The metal oxides and molten salts also remove hydrogen chloride and alkali vapors from the gases. These are equally harmful as the sulphur compounds for subsequent gas treatment. The desulfurisation is usually done at elevated temperature of 500-750°C and mixed oxides are usually preferred as they stand the temperature and repeated regeneration. The well known iron oxide is an example for H_2S removal but this does not stand higher temperature. A mixture of zinc and iron oxides i.e., a ferrite of zinc is preferred for hot removal of S. Literature on such removal at elevated temperature is scanty.

Morgantown Energy Technology Centre has studied the removal of H_2S and HCl from the gases obtained in their 1 t/hr stirred bed gasifier operating under pressure. Prior to this, laboratory studies using simulated hot gas mixtures were done on the suitability of zinc ferrite at 550-750°C. The gases contained HCl and tar vapours besides H_2S. Regeneration of the bed was studied using air and steam.

Institute of Gas Technology, Chicago has carried out studies on the use of fine mixed metal oxides such as cobalt oxide and silica, manganese oxide, $FeCr_2O_4$ and Co_2TiO_4 with high affinity for H_2S. During regeneration, elemental sulphur is produced which is an advantage.

Removal of HCl vapour from hot gas was investigated using two types of molten alkali carbonates as sorbents. These are mixtures of Li_2CO_3 and K_2CO_3 and Li_2CO_3 and Na_2CO_3. Simulated gas mixtures prepared by mixing pure gases from cylinders were used under hot conditions and at atmospheric pressure.

At Stanford Research Institute, removal of HCl from simulated gas mixtures was studied using synthetic and natural materials at 525-650°C. These are mostly sodium carbonate-based. Katalco chloride guard 53 and naturally occurring shortite $Na_2CO_3 \cdot 2CaCO_3$ and Nahcolite ($NaHCO_3$) were also tried. A fixed bed reactor using small quantities of sorbent was used.

Pacific North West Laboratories have been using molten alkali metal carbonates in supported and unsupported forms. It involves reversible reaction of H_2S with the salts. The removal of H_2S starting with a gas containing 1% H_2S was 99.5%. The sorbent is regenerable and the regeneration gases contain upto 50% H_2S. Operating conditions are temperature around 800°C and pressure 15 bar.

Solvents: In Lawrence Berkeley Laboratory, polar organic solvents like mono or dialkyl ether or ethylene glycol are being tried in a bench scale unit. A PDU to process gases from a plant handling 50 t/hr of coal is being designed. The gas is scrubbed with the solvent and the spent solution is reacted with an equivalent amount of SO_2 dissolved in the same solvent. Elemental sulphur is produced according to the reaction.

$$2\ H_2S + SO_2 \longrightarrow 3S + 2H_2O$$

Metal Complexes: Several types of supported metal complexes in different organic solvents have been studied at Batelle Pacific North West Laboratories for selective chemical separation of gases like CO, CO_2, H_2, H_2S and CH_4 from simulated gas mixtures. Nitrogen is used to strip the absorbed gas from the solution. From these studies it was found that hydroxo carbonyl bis (triphenyl phosphine rhodium, $Rh\ (OH)(CO)(C_6H_5PH_3)_2$ is selective for CO_2; bis (diphenyl phosphino methane) dichloro dipalladium selectively and rapidly binds CO in presence of O_2, CO_2 H_2, H_2O and H_2S; biscarbonyl tries (Triphenyl phosphine ruthenium) $Ru\ (CO)_2\ (C_6H_5PH_3)_3$ complex binds H_2 in presence of CO or O_2. 1, 1, 2 trichloroethane and 1, 2, 3 trichloropropane are the solvents. Other complexes attached to polymer supports are being tried for separation of CO_2, CO and H_2.

Adsorptive Methods: Adsorbents with high ratio of surface area per unit weight are usually employed for this method. This is a cyclic process and done at ordinary temperatures. Activated carbon has been tried for the removal of CO_2 and separation of H_2, CH_4 and H_2S in enriched form at the State University of New York, Buffalo, using pressure swing adsorption (PSA) method. Advantage of active carbon is its comparatively low cost. The process is less energy intensive when compared with other separation methods. Since most of the second generation gasification processes operate under pressure, the gas from such systems as well as from moving bed Lurgi gasifier can be treated by PSA. Usual pressures are 50-1000 psi. From a binary mixture, 99% pure gas with 90% recovery and high throughput has been obtained. Separation from ternary mixtures $H_2/H_2S/CH_4$, $H_2/CH_4/CO_2$ has been accomplished in the laboratory. Separation of gases from multicomponent mixture is being tried.

Molecular sieves are also coming up for PSA. Pure H_2 is being produced from industrial gas streams. The size of the bed is dependent on the concentration of impurities in the gas mixture. Desulfurisation is also being tried with molecular sieves using different types of molecular sieves depending upon the type of sulphur compounds and their concentration. CO_2 removal is also using tried with molecular sieves.

Permeation Methods: This is a new field coming up for gas separation. Semi permeable membranes with different permeability rate for different gas components. It is essentially a reverse osmosis type, the partial pressure of the component being the driving force for separation. The advantages are

- low operating and overall cost;
- low space requirement
- economic viability at both high and low capacities;
- low energy requirement.

The process is still in developmental stage, mainly for binary gas mixtures. Its application for removal of acidic gases from coal gasification streams is not yet known. Considerable work is in progress in USA, Japan, Italy for dehydration of natural gas, recovery of CH_4 from biogas, recovery of Helium from natural gas. Separation of air, olefins from paraffins (ethylene and propylene from paraffin upto C_5), CO_2, H_2S and COS from coal gas is being studied.

National Burcan of Standards, Boulder is studying separation of acid gas by chemical complexing with an ion exchange membrane. These are supported membranes; impregnated with liquid containing carrier species such as K_2CO_3 or $CeCO_3$. Liquid film acts as membrane. Carrier species in the liquid reacts with

the acid gases forming a complex which diffuses to the low pressure side of the membrane. The reaction is reversed and acid gases get desorbed and are swept away. Such a membrane system can be viewed as absorber on the high pressure side and absorbent regenerator on the low pressure surface. The membrane system is thus akin to a scrubbing system but requiring a single vessel. Life of membrane is 3-5 years.

RRL-H Programme: As stated earlier, RRL-H has a major project on coal gasification. A 1 t/hr moving bed gasifier under pressure is being used for studies in the project. As part of this programme it is proposed to study gas clean up by the adsorptive, and membrane techniques. Separation of acidic gases (CO_2 and H_2S) using active carbons molecular sieves, silica gel, activated alumina from synthetic gas mixtures prepared from pure gases in cylinders is proposed to be studied in a bench scale set up. Fig.1 gives a flow sheet of the set up. Effect of pressure, temperature, composition of gas mixture and regeneration of sorbent will be investigated. Data on equilibrium adsorption rate for gas mixtures on different adsorbents will be collected for scale up. The reactor has an internal dia of 27mm and is 700 mm long.

Four thermocouples will be located at different positions in the adsorbent bed. Binary and multi component mixtures will be used.

In the second phase, of such experiments a gas stream from the moving bed gasifier will be used.

The second aspect of study will be with different membranes using gas mixtures prepared from gases in cylinders. Enrichment and removal of acidic gases will be tried. A permeability apparatus for trials with different membranes, polyamides, polyvinylidene chloride, ethyl cellulose, cellulose acetate will be constructed for this study.

In a moving bed gasifier, the gas may have traces of tar particles and their removal is essential for absorptive or permeative separation. Adequate precaution will be taken to remove such tar particles. The studies are proposed to be extended to the gas obtained from the fluid bed gasifier system which is also being tried in the Laboratory.

BENCH-SCALE EXPERIMENTAL SET-UP FOR GAS CLEANING WITH DRY BED ADSORPTION

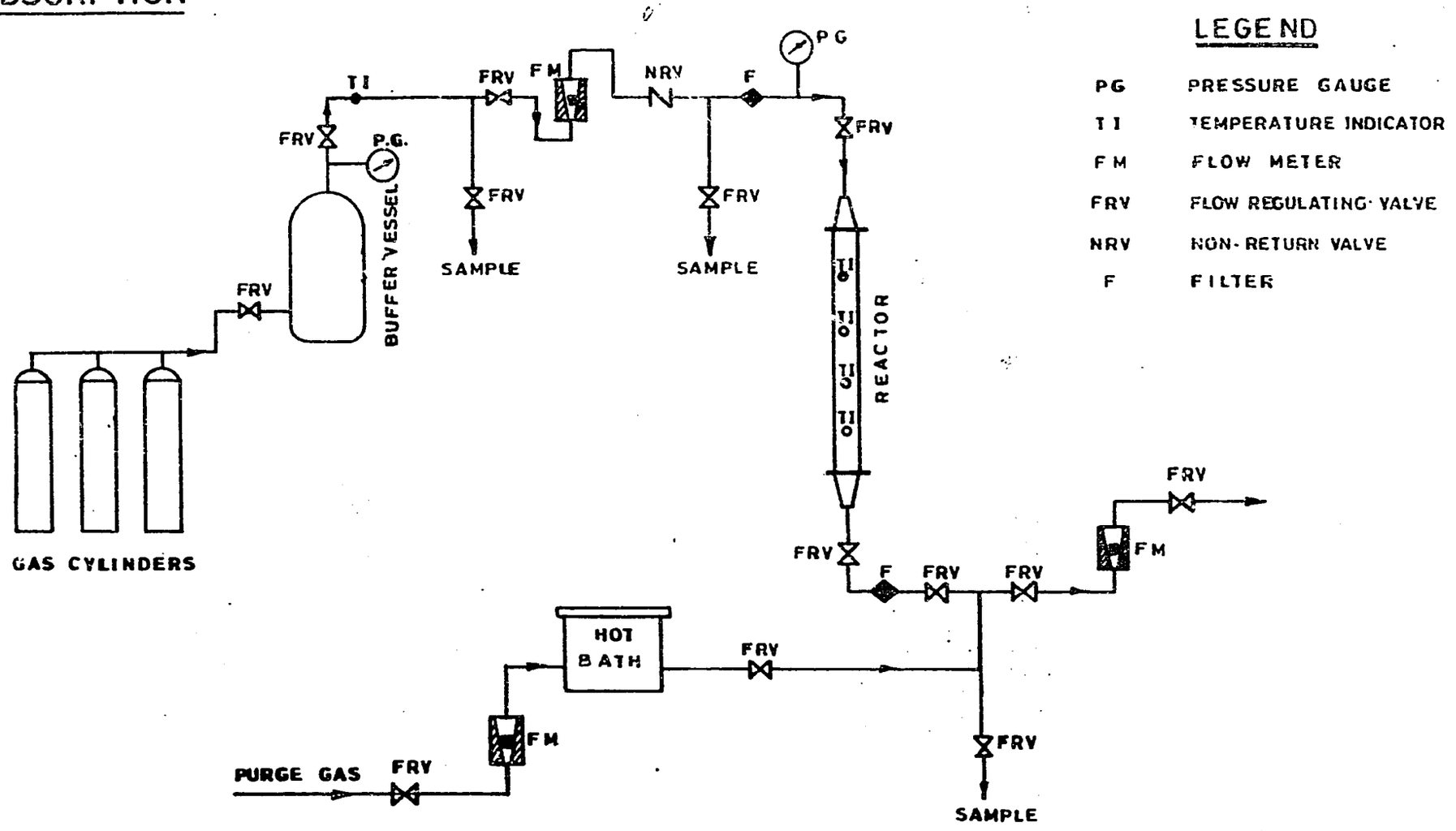

FIGURE - 1

EVALUATION OF INDIAN COALS FOR COAL SLURRY FUELS

Robert Powell

CoaLiquids
Louisville, Kentucky, U.S.A.

(Paper unavailable at time of publication)

R&D ACTIVITIES ON FLUIDIZED BED GASIFICATION OF COAL AND COM COMBUSTION

A.B. Datta
P.K. Chatterjee
K.M. Kundu
B.B. Bansal

Central Mechanical Engineering Research Institute
Durgapur, India

R&D ACTIVITIES ON FLUIDIZED BED GASIFICATION OF COAL AND COM COMBUSTION

A.B. Datta, P.K. Chatterjee, K.M. Kundu & B.B. Bansal,
Central Mechanical Engineering Research Institute,
Durgapur, India.

In view of the ever increasing oil crisis in terms of rapidly depleting limited reserve and also excessive price like, the use of coal as a source of energy to the maximum possible extent has become imparative. In India, coal in varied quality is abundantly available. Huge quantity of fuel oil is imported for feeding furnaces, combustors in industries. In this perspective, CMERI, Durgapur has taken up two major projects : (i) Fluidized bed gasification of coal and (ii) Combustion of coal oil mixture.

1. Fluidized bed gasification of coal:

Extensive research on fluidized bed combustion of coal is being carried out with a view to efficiently utilize even inferior quality of coal. However, the use of a clean gaseous fuel has always been attractive because of their excellent properties as regards to environmental pollution, transportability and varied uses. All these have added to the further importance and relevance of coal gasification technology for improving the conventional methods and developing newer methods particularly suitable for inferior types of coal. In this perspective fluidized bed gasification of coal has got a promising potential. The advantage of fluidized bed such as excellent gas solid contact, attainment of uniform temperature, enhanced heat transfer rate etc. make it more attractive.

Commercially Lurgi, Kopper Totzek, Winkler gasifiers are widely used for coal gasification. There is an increasing interest in improving these conventional methods. Research investigations and development work on fluidized bed gasification are extensively being carried out abroad by various Universities and Institutions such as Westing House, U.S.A., IGT, U.S.A., Rhenische Banukohlen Werke West Germany.

Coal in varied quality is abundantly available in India. R&D work on gasification of coal has been initiated at different laboratories. A project on 'Fluidized Bed Gasification of Coal' has been

initiated in CMERI under the sponsorship from Tata Energy Research Institute (TERI). The objective of the project is to develop a fluidized bed (atmospheric) coal gasification system using coal, air and steam and to study the effect of important parameters on the performance in order to design know-how suitable for Indian coal.

An atmospheric fluidized bed gasifier of laboratory scale model has been designed and developed. The design parameters for the gasifier are as follows :-

TABLE-1 : Specification of the experimental gasifer.

Bed size (m^2)	:	0.2 x 0.2
Height of the gasifier (m)	:	2.0
Type of the distributor	:	Straight hole
No. of holes	:	400
% of open area	:	3.14
Coal feed rate (kg/hr)	:	12 - 25
Air flow rate (kg/hr)	:	25 - 50
Steam flow rate (kg/hr)	:	6 - 15
Bed temperature (°C)	:	850 - 1000

Schematic sketch of the gasifier is shown in Fig.1. Coal feed by a screw feeder has been arranged and feed rate is controlled by variation of input voltage to the motor. Steam supply pipeline from a nearby boiler house has been installed. The out-put product gas can be drawn into sample collection chamber by a suction pump through sample collecting tube having filtered tip and water cooling arrangement.

The gasifier unit has been run on combustion mode several times to understand the bed behavior. Later the unit has been tested on trial run as gasifier with air and steam supply. Typical analysis of coal used in this study is given in Table-2.

TABLE-2 : Coal analysis.

Type of coal	:	Coke Breeze (-3mm + 1mm)
Moisture	:	1.1
V - M	:	5.0
Ash	:	30.4
F.C.	:	63.5

Bed height is one of the important parameter in the process of gasification. Shallow bed may not be effective since combustion prevails in the lower zone. Gasifer has been run at three different bed heights keeping other conditions fixed. A plot of gas composition vs. bed height has been shown in Fig.2. Volume percentage of combustible gases increases steeply with bed height from 0.3 meter to 0.5 meter which is followed by marginal change with further increase in bed height. For this design, a bed height of 0.6 meter has been choosen in further experimentation. A very small percentage of CH_4 (0.8%) has been obtained at higher bed heights. The calorific value of the product gas has been found to increase with bed temperature as shown in Fig.3. The operation has been limited to 1000°C to avoid the possibility of ash softening. Typical operating data has been presented in Table.3. The fly ash which is coming out of the gasifier by elutiation has been analysed for unreacted carbon.

TABLE-3 : Typical operating data.

Air flow rate (kg/hr)	:	37
Steam flow rate (kg/hr)	:	9
Coal feed rate (kg/hr)	:	16
Bed temperature (°C)	:	1000
Bed height (m)	:	0.6
% Carbon in fly ash	:	4.3
C.V. of product gas (MJ/m^3)	:	4.1

2. Combustion of COM.

Direct use of coal generally entails several problems. Coal-oil mixture (COM) provides an immediate partial transition from oil to coal without major modifications of the existing furnace and boiler system. Although the concept of use of COM as fuel is not new, significant R&D activities on this aspect were initiated in early seventies after the oil embargo. In some developed countries COM technology has reached the point in development where technological issues have been addressed. In U.S., GM and PETC initiated the development work during 1975. Subsequently significant research has been carried out in several countries, e.g. Canada, Japan, Sweden, China.

In India, CFRI, Dhanbad has developed a process for producing stabilised coal oil mixture in a batch process of 100 kg/hr. A continuous COM preparation plant is under development. CMERI, Durgapur has undertaken combustion investigation of COM. A pilot plant capable of burning 25-40 kg/hr has been commissioned. The brief specification of the pilot plant is shown in Table-4.

TABLE-4 : Furnace specification.

Type of Furnace	:	Cylindrical
Diameter (mm)	:	600
Length (mm)	:	3700
Burner	:	LPA
Capacity of COM firing (kg/hr)	:	25 - 40
Furnace loading	:	Nil

Schematic sketch of the pilot plant is shown in Fig.4. There are several sample holes along the length of the furnace for temperature measurement, flame visualisation and exhaust gas suction. Isokinatic probes have been used for particulate emission. Initial warm up of the furnace is done by furnace oil. When the furnace wall becomes red hot, slurry injection is started.

Feasibility of COM combustion has been initiated with 20% coal concentration. Systematic combustion investigation has been carried out next with COM having different coal concentration (20, 30, 40, 50%). The experimental results presentated here are for 50:50 COM. The physico chemical properties of this COM is shown in Table-5.

TABLE-5 : Physico Chemical properties of COM (50:50).

Coal: IB River Valley.

Proximate analysis :

Mositure	:	4.2
Ash	:	41.2
V.M.	:	24.9
F.C.	:	29.7
Calorific value	:	4050 kcal/kg.

Oil : Medium Viscous.

Calorific value	:	10,000 kcal/kg.
Viscosity at 50°C	:	140 CP.

COM (50:50):

Calorific value : 7,000 kcal/kg.

Viscosity at 85°C : 930 CP.

The temperature distribution in the furnace has been shown in Fig.5 where the results have been compared with those of furnace oil. In the initial zone the temperature of COM is lower than that of furnace oil. However, in the further downstream zone the temperature of COM becomes higher than that of furnace oil. Because of lower viscosity of furnace oil, its spray characteristics is better which results in quicker combustion and consequent higher temperature in the initial zone. The process of droplet disintegration and coal combustion requires more time for complete combustion of COM. As a result, the flame length in COM combustion is larger than in oil combustion as shown in Fig.6. The flame length (Fig.6) gradually reduces with excess air which may be attributed to better oxygen availability. Typical operating results of COM combustion is shown in Table.6 wherein exhaust gas analysis, ash loading, carbon content in ash and combustion efficiency are shown.

TABLE-6 : Some operating results of COM Combustion.

Run No.	1	2
Excess air (%)	10	15
Fuel flow rate (kg/hr)	37	37
Fuel injection temperature (°C)	90	90
Exhaust gas analysis		
CO_2	12.2	14.5
CO	0.3	0
O_2	2.6	3.3
Ash loading (kg/hr)		
Fly ash	6.235	6.208
Furnace ash	1.730	1.757
Carbon content in ash (%)		
Fly ash	15.7	15.1
Furnace ash	5.3	5.3
Combustion efficiency (%)	95.9	96.1

— :oO:)—(:Oo: —

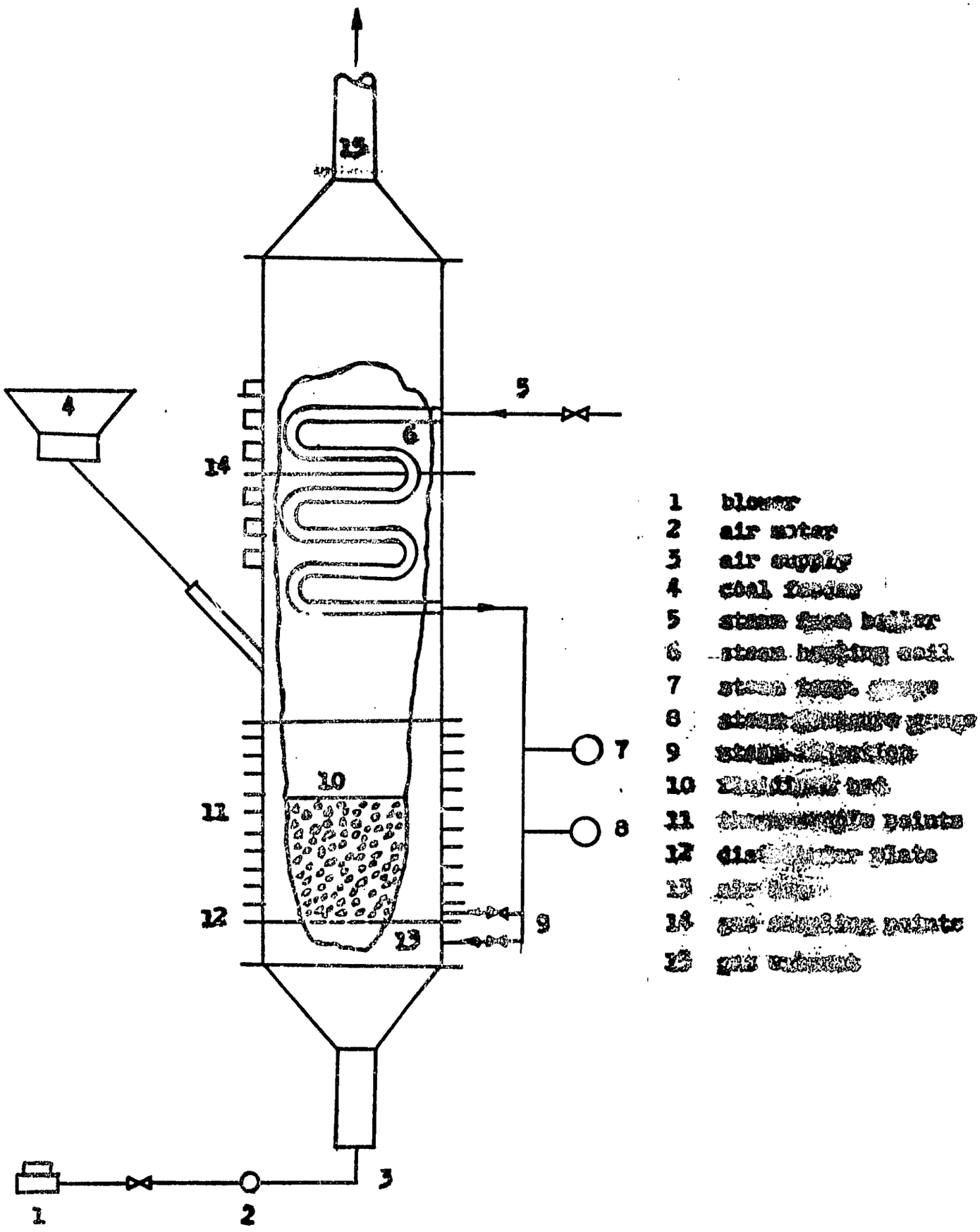

FIG.1 , EXPERIMENTAL FLUIDISED BED GASIFIER UNIT

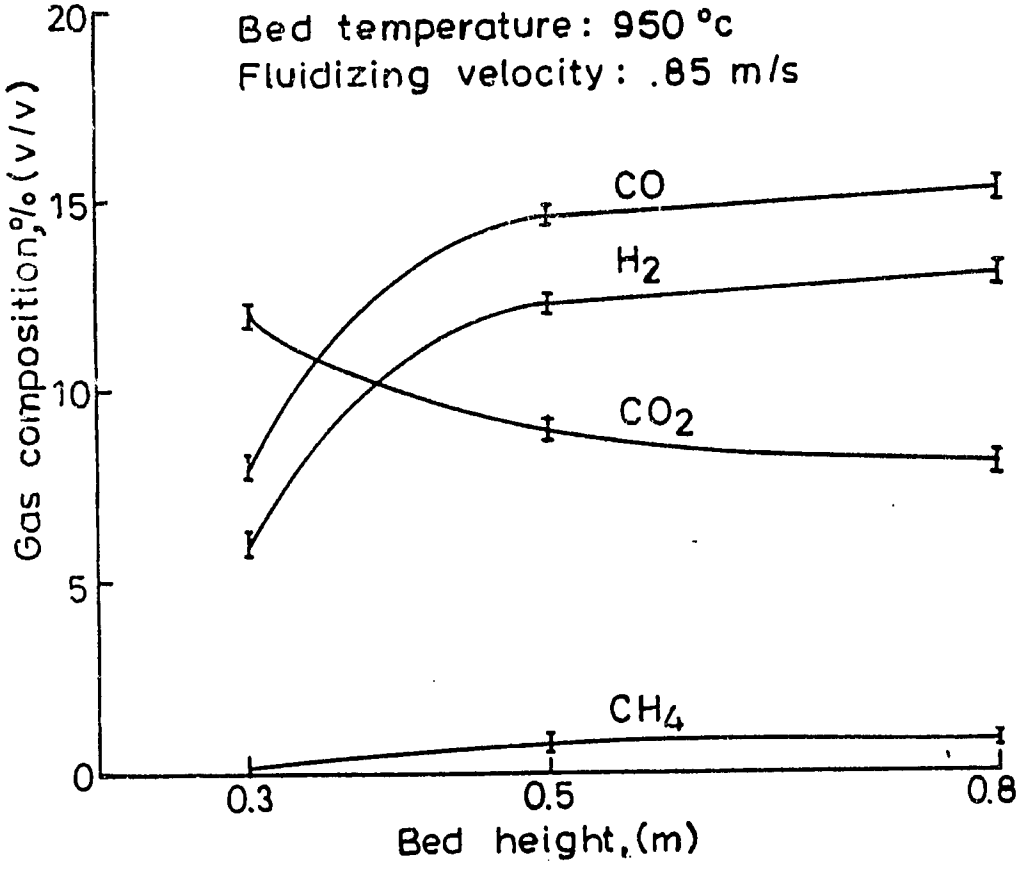

Gas composition Vs Bed height

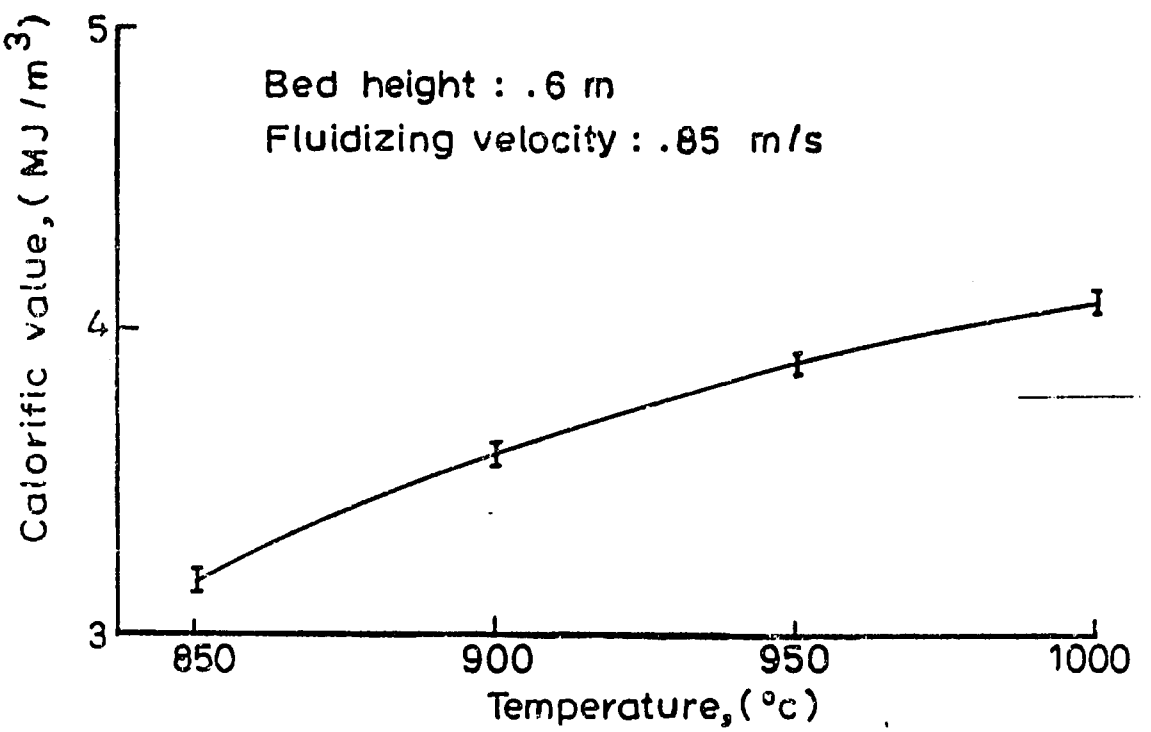

Calorific value Vs Bed temperature

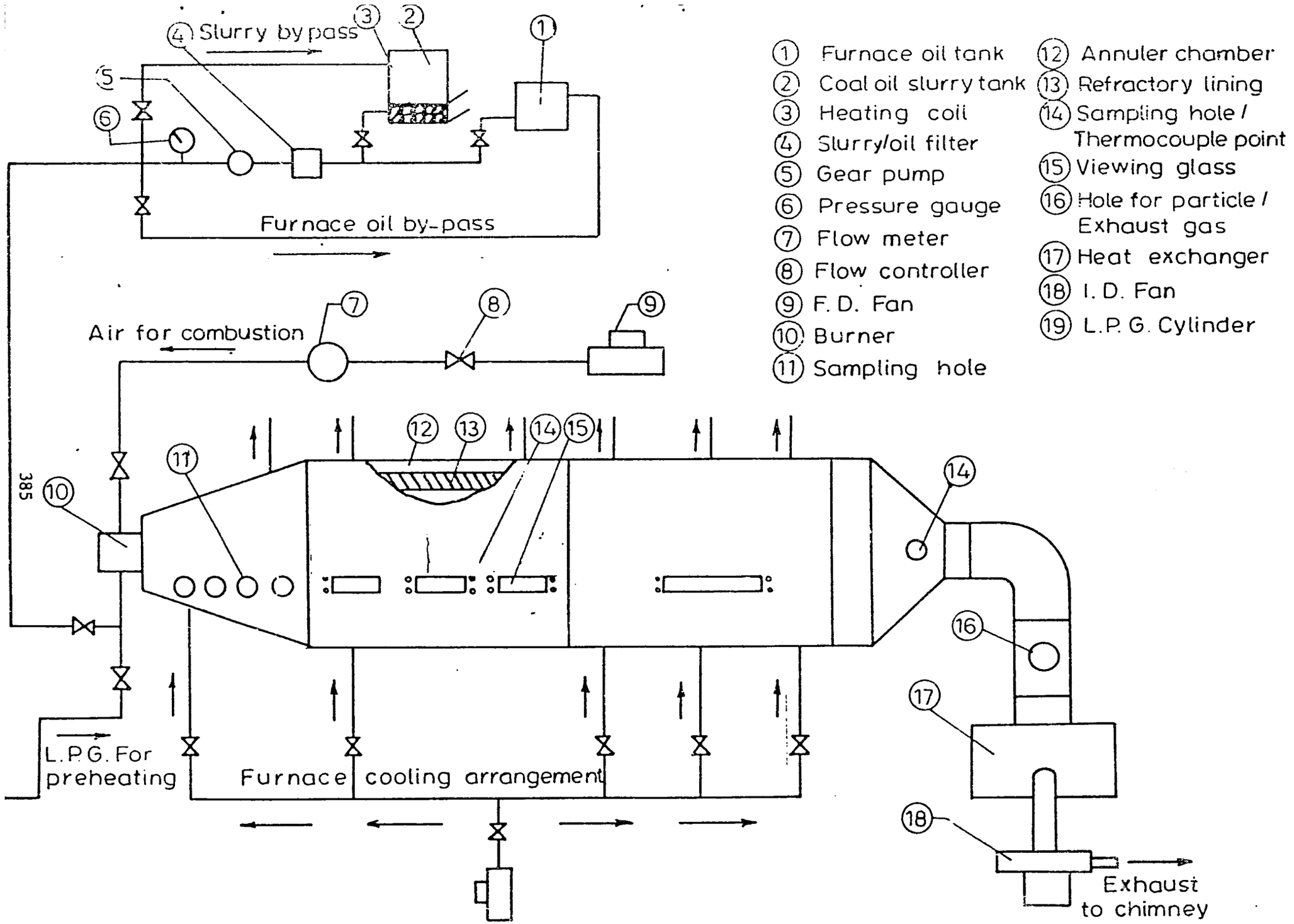

Fig. 1 EXPERIMENTAL SET-UP FOR COAL OIL MIXTURE COMBUSTION

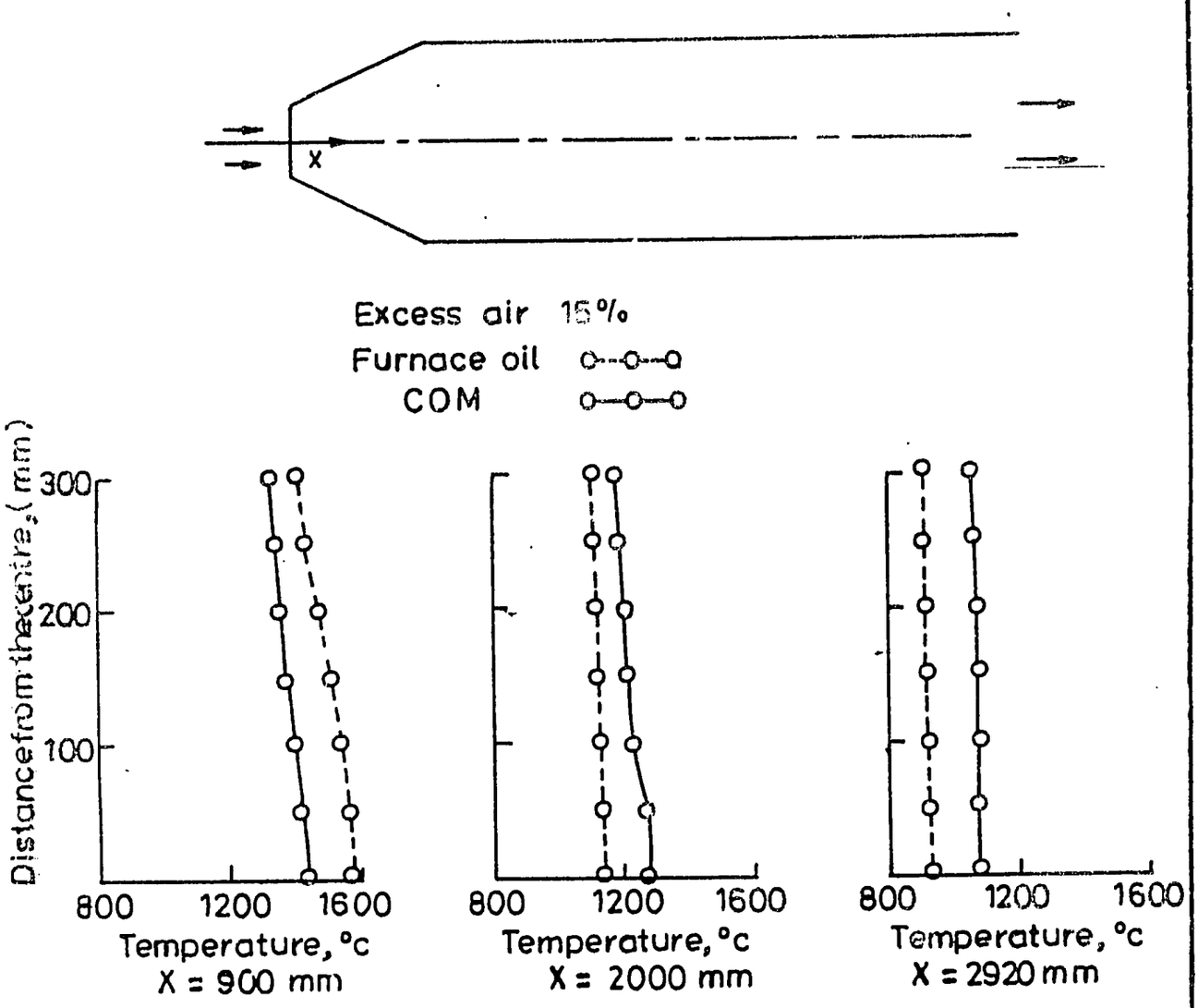

Temperature distribution in the furnace

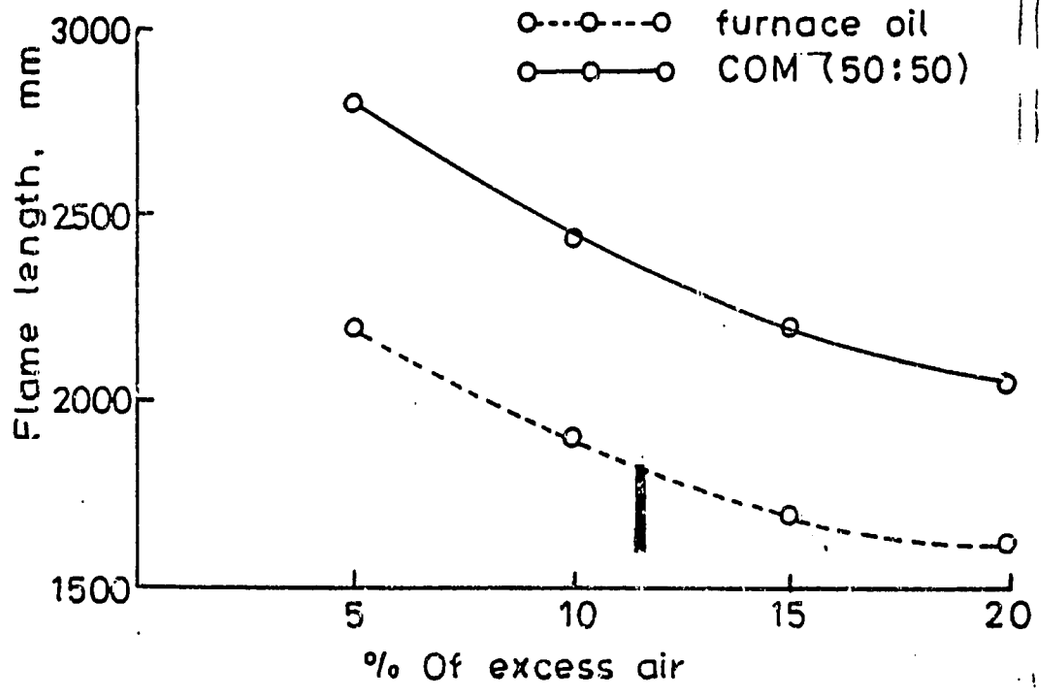

Flame length Vs Excess air

QUESTIONS AND ANSWERS - COAL CONVERSION, AFTERNOON SESSION, DECEMBER 6, 1985

Panel Discussion

C. I have only one suggestion to make to Dr. Sandu. You must shows this video to Tata State Electricity Board and Karnataka State Electricity Board. These two electricity boards have fairly large size power stations which are getting re-transported coal of easily 3 million tons/annum at each power station. I am sure they would be very interested in this.

Q. What technology do you plan to select for the three different regions?

A. On the basis of evaluation, an appropriate technology will be selected. Bechtel, in 1980, had presented to the planning commission, three scenarios for a national level pipeline transportation system. A northern pipeline, which would come from the Bengal region, travel through UP to supply existing power plants, to Delhi, Harayana, and Punjab; a northwestern pipeline system, also originating in the Bengal region, going through Madhya Pradesh, to Maharashtra and Gujarat; and a southern pipeline system for the stations in the south. All three of these systems will be evaluated. Since these are all capital- intensive projects, the selection of an appropriate technology for Indian coals is very important, and this is being very carefully monitored.

Q. For a pipeline of the length you are talking about, wouldn't more pump stations in different places be required?

A. That is correct. For instance, in the 273 Black Mesa slurry pipeline, there are four pump stations; an initial pump station, and three booster stations. Generally, if it is a flat terrain, we use conventional pump delivery with a discharge pressure of 1500 to 2000 psi, which is adequate to transport 100-150 miles. If it is a sloping terrain, you will go further; if it is a rising terrain, you won't go as far.

Q. What is the coal particle size involved?

A. I'm not very familiar with the metric mesh size, but I will tell you in Tylor mesh size. We limit the pulp size to about 100% passing 16 to 18 mesh, or 14 mesh. We also have a control on the bottom size, about 16 to 20%. It should not pass the 325 mesh because it then becomes a problem in the dewatering.

Q. Dr. Powell, you suggested that for Tata, you achieved an ash level 5.8% from 21, could you tell us what technique was used for this?

A. I can't really give you the details. It is a proprietary process we're

developing using the bubble technique. We do expect to publish it sometime during the latter part of next year. At present, it is confidential.

Q. What is the stability, concentration, and price of coal-liquid mixtures prepared with Indian coals? What would be the coal-liquid mixture properties with typical subituminous Indian coal containing about 10% moisture, 10% oxygen?

A. We have been producing coal-water slurries and shipping them overseas to several destinations and these fuels have remained very stable for about six weeks. After six weeks, some settlement does take place, but it is fairly easily established to the appropriate level. Economics are very much related to the particular coal involved and we generally make a proposal that will relate to a processing cost per ton of fuel, or whatever other evaluation one wants to put on it. It is very difficult to give you a figure off-the-cuff because the coal costs are different, the chemical costs are different, and the loading and the finished product is different. It would be different for every coal.

Q. I was surprised to note the number of Indian coals are evaluated by CoaLiquid. The conclusion said that some more work is to be done. What are the tests that have already been carried out, and were they carried out on a large scale? Have the tests been made only on preparation or on combustion as well? What tests are planned to make the conclusion attractive for Indian coals? Can the coal-liquid can be used for high ash Indian coals?

A. The work carried out at present has been entirely at the laboratory level and the results are being presented to Tata Iron and Steel. The stage beyond that will depend on how much further they want us to go in this stage, whether they are prepared to have a small scale pilot plant, or if they will ship additional quantities of fuel to us to evaluate. The tests so far have only been on preparation. Combustion will follow when we have evolved the correct technique for preparation.

Q. Would you not expect severe erosion problems with high ash coals, particularly when you use it for atomized combustion?

A. One of the applications we are looking at specifically for them is in connection with injection and open hearth furnaces where the erosion problem doesn't arise. In the second case, when used in a boiler, and the ash level is reduced to about 5%, the degree of erosion is not always critical. Now, we have a lot of experience with this, currently with fire tube boilers in particular, where we have been burning both English and African coal in a European country. The life of the boiler has not suffered from that effect.

Q. I am particularly referring to the atomizer erosion.

A. That depends very much on the nature of the burner, and like most people in this business, we have been through a number of proprietary manufacturers. There are some we would use again, and some we wouldn't.

Q. I would definitely take it as proprietary information on the configuration details, but what has been achieved with your own burners is what interests us. Is it at all possible to have a reasonable life with very high ash levels? We have to build the confidence that this kind of technology is possible with such coals.

A. We started in Korea with a particular burner design which, when it first ran, had a life of about 24 hours. Through continual development with the manufacturer of the equipment, we are now running about two months before having to change the burner tips.

Q. This is with what ash level?

A. In Korea, I think it is at about 6 or 7% ash level.

Q. You were coming to the conclusion that it is good to go with COM before we could start out with CWM. As I understand the international scene, the COM is extinct. It has been almost decided that it is very uneconomical when the technology on CWM has come up. So after working on COM for several years, practicality has decreased. For what application and in what size units should this be used?

A. Let's talk for the moment about steam boilers up to about 10-20 tons, not in large megawatt plants where the economics are totally different. There is a strong case for using a coal-oil-water mixture, where ash in the original coal is near 10-12%. I don't want to draw a parallel directly with some of your Indian coal, but where the ash level is 10-12%, the small savings that you will get using a coal-oil-water mixture are off-set by the fact that you are not going to have to do an ash reduction process on that coal. In other words, you are going save on beneficiation costs, and that is going to cancel out the reduced savings using coal-water. With a 20% ash level, the economics would be rather different. I wouldn't like to comment on that without some further thought. It is all a trade-off between one system and the other. You mentioned that coal-oil is dead. Yes, that is so, partly because of the economic situation in the United States where most of this work is done. Today, on a purely economic basis, there is hardly any reason to use coal-water mixture when oil is continuing to decline in price. Of course, that isn't the long term gain.

Q. What is the particle size for such small units? Is it really possible to go with the present day pulverizing at 75 microns, about 70%, or is it absolutely essential to go down on particle size? We know that a number of smaller manufacturers who are micron developers, have gone that way using micronizers of particle size of around 40 microns. Would you like to comment on this? What is the philosophy of CoaLiquids?

A. I can't do the conversion to microns off the top of my head. We use a number of 80% passing, passing 100, or 100% passing, 200 mesh. That is very appropriate for the coal-oil mixtures. Some work is being done, I am aware, using micronized coal and I think the effect of using that probably changes the whole fuel delivery system. That is the area where the difference will come in, in the fuel delivery system rather than in the actual mixture.

DEVELOPMENT AND OPERATION OF BIOMASS GASIFICATION SYSTEM FOR 5 HP IRRIGATION PUMPS

Siddhartha Gaur
N. Anuradha
T.R. Rao
P.V.R. Iyer
P.D. Grover

Department of Chemical Engineering
Indian Institute of Technology
New Delhi, India

DEVELOPMENT AND OPERATION OF BIOMASS GASIFICATION SYSTEM FOR 5HP IRRIGATION PUMPS

SIDDHARTHA GAUR, N.ANURADHA, T.R.RAO, P.V.R.IYER, P.D.GROVER

(Department of Chemical Engineering)

I.I.T. Delhi

Presented at Third Annual Workshop on Biomass and Coal Conversion Programs of the USAID/GOI Alternative Energy Resources Development Project, Held at Hotel Maurya Sheraton from Dec.5 - 7, 1985.

1.0 INTRODUCTION

The increasing per capita energy demands and the limited stocks of fossil fuel necessitates an exploration of alternative energy resources to meet the energy requirements.

India being a predominantly agricultural country, requires major attention for the fulfilment of energy demands of a farmer. Nearly 40 million irrigation pumps are under operation all over the country. These pumps are driven mainly by diesel engines. Through gasification technology, waste agromaterials can be converted into a fuel source for running these engines. Several countries at present are engaged in the development of satisfactory gasifier units for this purpose. This paper deals with the design, development and operation of a down-draft gasifier. This work was carried out at the Chemical Engineering Department, I.I.T.Delhi, for charred biomass as feed material.

2.0 DESIGN OF THE GASIFIER

Many of the gasifiers designed so far, although satisfactory for specified conditions, do not offer any flexibility with respect to changes in operating conditions. The present gasifier was designed so as to give greater flexibility in operation. A conceptual outline of the gasifier is shown in Fig.1. The salient features of this unit are:

a) The throat and the reduction cone are made up of a single metallic piece which can be easily fixed and is also replaceable. Desired hearth loads can be achieved by using suitable sizes for the throat diameter and length of the reduction cones.

b) Tuyere openings are provided at two different levels. This offers some flexibility in changing the fire length. These openings are such that different combinations of number of tuyeres, diameter of the tuyeres, distance of the tuyere tip from the centre can be selected.

c) The gasifier is in two parts, as shown in the figure, facilitating easy access to the interior parts of the gasifier.

d) The combustion and reduction zone areas can be insulated easily depending on the requirements.

e) Side tuyeres facilitate easy flow of the solid fuel through the throat and better distribution of the air in the oxidation zone.

f) It has both horizontal and vertical grates. This to a large extent eliminates choking problems and also reduces the total pressure drop.

g) An opening provided at the bottom of the gasifier enables frequent removal of ash. This is in addition to the ash port meant for periodic cleaning of the bottom areas of the gasifier.

h) A shaking arrangement is also provided to facilitate removal of ash from the grate.

2.1 Design Basis:

The present gasifier is required to operate a 5Hp I.C. engine coupled to a pump with briquetted and charred biomass fuels (≈ 80% carbon). About 70-80% replacement of the diesel oil is possible in CI engines. Hence the power, which the gasifier has to generate, is 3.5 to 4 Hp/hr. In case the

gasifier is to operate a Gasoline engine, in which 100% replacement of gasoline is possible, the gasifier has to produce an energy equivalent to 5 Hp/hr. Keeping both the above points in view, the present gasifier is designed for generating a maximum of 5 Hp/hr.

2.2 Design calculations:

2.2.1 Producer gas requirement:

The composition of the producer gas varies with the type and quality of the fuel used. It generally lies in the following range (in volume %)

CO = 17% - 25%, H_2 = 6% - 14%, CH_4 = 0.0% - 1%

CO_2 = 3% - 7%, O_2 = 1% - 4%, N_2 = 55% - 64%

The engine pump efficiency varies from 20% to 30%. In the present calculations an average composition for the combustible gases in the producer gas as Co - 23%, H_2 - 10%, CH_4 - 0.5% and an engine efficiency of 20% (on the minimum side) are assumed.

The energy equivalent of $1Nm^3$ of the above quality producer gas is = 1.9 Hp.hr

∴ Amount of producer gas required to run 5 Hp/hr engine with 20% efficiency $= \dfrac{5}{0.2 \times 1.9} = 13.2\ Nm^3/hr$

Assuming 10% excess production = $14.52\ Nm^3/hr$.
(Accounting for composition changes)

2.2.2 Fuel requirement:

An approximate gas yield (1) from biomass fuels, both charred (80% carbon content) and certain raw fuels, is $5\ Nm^3/kg$ of dry fuel. Assuming an average of 10% moisture

in the fuel, the gas yield becomes 4.5 Nm^3/kg of wet fuel.

∴ Fuel required to produce 14.52 Nm^3/hr = 3.22 kg/hr.

For 8 hours continuous operation of the gasifier, the fuel required = 26 kgs.

2.2.3 Throat diameter:

The "Hearth load" of a gasifier is expressed in terms of "specific gasification rate", i.e. the amount of dry fuel in kilograms that can be gasified per square meter of the throat area per hour. In down-draft gasifiers the maximum permissible gasification rate (1) in terms of producer gas output is 1. Nm^3/cm^2-hr. However, the optimum value for efficient operation of the gasifier lies in the range of 0.8 - 0.95 Nm^3/cm^2- hr. For a requirement of 14.52 Nm^3/hr producer gas the throat diameter ranges between 40mm to 50 mm.

Specific gasification rate = Gas flow rate in Nm^3/throat area in cm^2 = $14.52/((4.5)^2 \times /4) = 0.9$ Nm^3/cm^2-hr.

2.2.4 Air requirement for gasification:

The air requirement for gasification is calculated based on "Equivalence Ratio" (ER) defined as (1).

$$ER = \frac{\text{(Weight of oxidant/weight of dry fuel)}}{\text{(oxidant/fuel) at stoichiometric air ratio}}$$

The optimum ER value is considered where highest amount of chemical energy is available.

The ER value normally lies between 0.2 to 0.4 (1) depending upon O_2 content. In the present case with biomass char ER equals to 0.275 .

Stoichiometric oxygen requirement for one kg. mole of carbon = 22.4 m^3 at STP

∴ Oxygen needed at ER = 0.275 = 22.4 x 0.275

= 6.16 SCM/hr

∴ Air requirement = 29.33 SCM/hr.

∴ Air required to gasify

3.22 kg/hr of fuel $= \frac{29.33}{12} \times 3.22$

= 6.689 SCM/hr.

2.2.5 Tuyere diameter and Number of Tuyeres:

In determining the above, the following specifications have been taken into consideration.

(a) Air flow rate vs. tuyere diameter data (1):

Useful air flow rate range (Nm^3/hr)	Tuyere diameter (mm)
6.3 - 11.9	7.9
7.6 - 27.2	12.7
12.4 - 47.6	19.0

Recommended air tuyere diameter = 8 mm.

(b) Air velocity in the tuyere (1):

The optimum air velocity in the tuyers should lie in the range of 19 - 22 m/sec at STP. Higher velocities lead to slagging of ash and lower velocities lead to improper oxidation conditions.

From the above considerations, for an air flow rate of 6.689 SCM, 3 tuyers of 6mm diameter are fixed. This gives the required air velocity in the tuyers.

2.2.6 Conversion ratio:

Conversion ratio = $CO/(CO+CO_2)$

Recommended value is 0.95 and above.

2.2.7 Other Hearth dimensions:

These are calculated based on the data, graphs and recommendations given in literature.

(i) Vertical distance of air tuyeres from the throat (Fig. (·) of Ref. (3)) = 1.6 times throat diameter

= 1.6 x 45 = 72 mm.

(ii) Distance between the tip of the tuyere and centre of the throat = 2.75 times throat radius

= 62 mm.

(iii) Fire length:

This is the vertical distance between air tuyeres and the bottom of the reduction zone.

∴ Fire length corresponding to 6.689 SCM and $72^{o}C$ (Fig. (63) of Ref. (1)) = 162 mm.

(iv) Length of the reduction cone = 90 mm.

Length of oxidation zone (distance between air tuyeres and throat) = 72 mm.

2.2.8 Diameter and length of the gasifier:

The diameter of the gasifier is fixed at 400 mm taking into account the tuyere ring span and some thickness of

fuel bed serving as insulation. The length of the gasifier is fixed at 1 meter taking into account the volume of the fuel required for 8 hour continuous operation.

2.2.9 Transit time:

The heating value of the gases depends upon the transit time which is defined by fire length dividied by air velocity in the tuyeres.

$$\therefore \text{ Transit time} = \frac{162}{21 \times 1000} = 7.7 \times 10^{-3} \text{ sec.}$$

The heating value corresponding to the above value of the transit time is 5.5 MJ/Nm^3 which is quite satisfactory for efficient operation of the gasifier.

A gasifier (based on the above design calculations) was fabricated at I.I.T.Delhi.

2.2.10 Specifications of the Gasifier (G-45):

Diameter	= 400 mm
Height	= 1000mm + 300 mm (stand)
Throat diameter	= 45 mm
Air tuyer diameter	= 6 mm
Number of tuyeres	= 3 nos.
Vertical distance of air tuyere from throat	= 70 mm
Horizontal distance from centre of the throat to tuyeretip	= 100 mm
Length of the reduction zone	= 90 mm
Length of the vertical grate	= 50 mm
Diameter of the grate	= 180 mm
Thickness of the top shell part	= 2 mm

Thickness of the bottom shell part = 3 mm

Throat plate thickness = 5 mm

2.2.11 Materials of construction:

(1) Gasifier shell - Mild steel

(2) Throat plate and cone part - Mild steel

(3) Air tuyers - Stainless steel (310).

3.0 GASIFIER OPERATION-EXPERIENCES

3.1 Missouri Gasifier:

(a) Test details

(i) Fuels used - saw dust, corn cob, charred corb cob, charcoal and wood chips

(ii) Periods of operation -0.5 to 3 hours

(iii) Total number of runs taken - 18

(iv) CO concentration achieved - Max. 10%

(b) Problems encountered

(i) Choking of the synthetic filters in the cooler cleaning unit

(ii) Chocking of the bed with charcoal of size less than ½".

(iii) Excessive pressure drop due to packed bed scrubber, hence low reduction zone temperature and poor quality of gas.

(iv) Burning of the fuel bed often occurred while refuelling the gasifier.

(c) Conclusion: Overall unsatisfactory operation.

3.2 G-60 Gasifier:

A conceptual design of this gasifier was presented

at the IInd Workshop held here from 4th - 6th Feb., 1985. This central tuyere unit was fabricated in the middle of April 1985. The unit was later modified as per the comments and advise of the US experts.

Test details

(i) Fuels used - charcoal, charred corb cobs

(ii) Periods of operation - 100 hours (approx.)

(iii) Total number of runs taken - 23

(iv) Variation in operation conditions - changes in number of tuyeres, diameter of the tuyeres, fuel size, throat diameter, etc.

(v) Maximum percentage of combustible gases achieved - 9%

Problems encountered

(i) Choking of the bed occurred quite often.

(ii) Presence of excess air in almost all producer gas samples.

(iii) Presence of excess of CO_2 in the gases.

(iv) Unstable operation.

In view of the above, some modifications were made to improve the operation, viz., provision of a grate shaker to avoid choking problems, provision of a cone in the reduction zone, variations in number, size and position of the tuyeres to improve conditions in oxidation zone and to reduce CO_2 concentration.

Conclusions: The modification did not improve the overall performance.

3.3 Gasifier (G-45)

The fabrication of this unit was completed in July, 1985 and was put under testing.

Test details

(1) Fuels used - Charcoal, charred corn cob pieces, corn cob char briquettes.

(2) Periods of operation - 150 hrs. approx.

(3) Maximum continuous period of operation - 25 hours.

(4) Total number of runs - 32

(5) Concentration range of combustible gases - CO = 20 - 26%

H_2 = 5 - 9 %

CH_4 = 0.0 - 0.4%

(6) Variations of operation conditions - No. of tuyeres, diameter of tuyeres, vertical and horizontal distance, of tuyeres from throat, dia of throat, fuel size, etc.

(7) Δ P across Gasifier - 15 to 20 cms. of H_2O

Problems encountered and their remedies

a) Formation of fused ash lumps

b) Presence of excess oxygen in the producer gas samples

c) Choking of the throat plate.

a) Formation of fused ash lumps:

A fused ash lump (18 x 10.5 x 3 cm) was formed just above the throat plate with 3 tuyers (8mm dia) placed at 6.1cm from centre of the throat (Run No.1) and resulted in termination of gasification process. The formation of the ash lumps signifies high localised temperatures in the oxidation zone which could be

due to the close position of the tuyeres. Hence, the tuyeres were moved farther away from the centre, i.e. from 61 mm to 90mm so that more fuel is available for reaction with air. This change resulted in the formation of 3 small ash lumps near the tip of each tuyere. This indicated that the air velocity in the tuyer is very high leading to the formation of the ash lumps. Consequently the diameter of the tuyeres was increased from 8mm to 9 mm and tuyeres were kept at 100mm from the centre. The above changes eliminated the problem of ash lumps formation. It is also found that ash lumps are formed whenever the gasifier is operated for a considerable period even when throat is choked. This condition is indicated in Table1/4 by rise in the grate temperatures beyond 600 - 650 ^{o}C. One reason for this condition is the presence of fines in the solid fuel feed which results in choking of the throat.

b) Excess of Oxygen in the producer gas:

It is found from the gas chromatographic analysis that the producer gas samples from the several initial tests contained excess oxygen to the extent of 10 - 12%. This was thought to be either due to leaks in the system or improper oxidation conditions. Measurement of temperatures in the oxidation zone and reduction zone indicated proper reaction conditions. It is found from various tests, that the main reasons for the presence of excess oxygen are:

(i) Air leakage through shaker rod joint: Air leak through this point does not pass through the fuel bed and hence leads to direct dilution of the producer gas.

(ii) Sampling port: The sampling port is a small copper pipe (4mm I.D.) fixed on the pipeline. It is found from tests that while drawing gas samples, the thin air film present near the walls of the pipe was drawn into the sampling bottles resulting in excess oxygen on analysis. Sampling port was changed to avoid this problem.

Replacement of the shaker rod joint with a proper gland packing and flushing the sampling bottles for 5 - 6 times eliminated the air leak problems and the producer gas was found to contain 1 - 2% oxygen and 60 - 65% N_2

c) Choking of the throat plate:

It is found that choking of the throat occurs for the following reasons.

(i) Presence of fines in the solid feed.

(ii) High moisture content in fuel feed (10%)

(iii) When fuel contains undersize or oversized particles, i.e., less than half inch or more than one inch.

(iv) Change over of fuel during gasifier operation, from low bulk density to high bulk density fuel (charred corn cob - 0.07 gm/cc to charcoal or briquetted fuel 0.4 gm/cc).

The above problems will not arise if precautions are taken regarding the fuel quality. Moreover when engine and gasifier are placed on the same platform this problem will not be of much concern as engine vibrations will shake the fuel bed in gasifier constantly.

4.0 PERFORMANCE OF WETTED WALL CYCLONE

A down draft gasifier working on charred biomass, as fuel, in general produces gases containing relatively very negligible quantities of tar and particulate impurities. These gases have to be further cleaned and also cooled for running an IC engine. A wetted wall cyclone separator schematically shown in Fig.(2) has been designed to achieve both the above mentioned objectives. In this, water flows into the cyclone through the gaps provided between the horizontal plate/gasket and the wall and flows in the form of a thin film on the inner wall of the cyclone. The partial cooling of the gases as well as removal of impurities is affected by absorption into the water film. This cyclone was found to be very satisfactory in effectively cooling the gases and removing the impurities. This unit offers very low pressure drop (9 mm for 10.5 ft^3/min gas flow rate at STP

The following data has been obtained with the cyclone.

1. Temperature drop of the gases:

Inlet temp.	Exit temp.
350°C	49°- 50°C
400°C	54°- 55°
550°C	58°- 60°C

Ambient temperature = 25 to 35°C.

2. Solids and tar removal -
3. Temperature rise of cooling - from 30°C to 40°C.
4. Pressure drop - See Fig.no.(7).
5. Temperature profiles: See Fig.no.(6).

In addition, it is found that the effect of flow rate of-water (0.15 - 3.0 lit/min) in the cyclone on the pressure drop is negligible. It is found that the temperature profiles measured at different locations were not the same indicating that the water film formation on the walls is not uniform. The cyclone was also operated under water over flow condition and found that the water film on the outer wall of the cyclone did not result in any appreciable temperature drop in the exit gases. This indicates that the process of cooling is mainly controlled by the water film on the inner walls of the cyclone.

5.0 DRUM FILTER

The drum filter was mainly made for cleaning gases containing relatively high impurities. In the present gasifier system, this unit serves mainly as a surge tank for reducing the effect of variations in the flow of gases on engine performance. This filter is also useful in further cleaning of the gases from the cyclone. It is found that the pressure drop across the unit is very small. The pressure drop data obtained are given in the table below.

Filter drum Flow rate of gases (ft^3/min)	Empty drum Pressure drop (cm water)	30 cm. of rice husk Pressure drop (cm of water)
0	0.0	0.0
2	0.1	0.1
3	0.1	0.1
4	0.1	0.15
5	0.1	0.2
6	0.1	0.2
7	0.1	0.25
8	0.1	0.3
9	0.1	0.3

TABLE NO. 1

G 45	Throat dia = 45mm						
Fuel Used	No. of hours	Horizontal distance of tuyere & throat (mm)	Vertical distance of tuyere & throat (mm)	No. of tuyer	Dia. of tuyere (mm)	Fuel consumption kg/hr.	Observations
Charcoal (3/4"-½")	2.16	61	70	3	10	3.6	First trial with G-45
-do-	3.0	61	70	3	8	4	Clinker found at centre
-do-	5.16	90	70	3	8	3.7	3 clinkers found at tuyere tips
-do-	2.85	100	70	3	9	3.2	Excess air, low CO, clinker formation
-do-	24.8	100	70	3	9	3.6	No clinkers
Corn cob char (3/4"-½")	7.5	100	70	3	9	3.4	No clinkers
Briquetted charred corn cob (Binder 5% rice starch)	1.0	100	70	3	9	3.2	Choking of bed due to oversized fuel
Corn cob char	3.25	100	90	3	9	3.5	-
-do-	3.0	100	90	4	8	3.6	-

(Table 1 contd..)

Table 1 contd..

G-45								
Fuel used	Temp. at grate (°C)	Oxidation zone temp. (°C) +	Gas outlet temperature (°C) ++	%CO	%H_2	%O_2	%CO_2	%N_2
Charcoal (3/4"-½")	500 - 556	1600	382	14.07	1.17	11.58	3.0	70.18
-do-	450 - 482	1800	380	10.52	0.46	8.23	6.24	74.55
-do-	480 - 515	1700	365	11.95	-	7.62	5.42	75.01
-do-	360 - 480	1200	290	5.53	-	8.98	7.74	77.75
-do-	530 - 600	1400	353	15.26	6.41	6.62	4.7	67.01
Corn cob char (3/4"-½")	360 - 380	1000	208	11.28	3.12	12.23	2.42	70.95
Briquetted charred corn cob (Binder 5% rice starch)	350 - 360	1100	176	-	-	-	-	-
Corn cob char	380 - 430	1100	288	12.86	3.58	9.94	3.36	70.26
Corn cob char	330 - 350	1100	210	11.876	2.721	10.842	3.428	71.133

\+ Measured randomly

++ Temp. when gas sample was drawn

TABLE NO. 2

-50 Throat dia = 50 mm

'uel Used	No. of hours	Horizontal distance of tuyere & throat (mm)	Vertical distance of tuyere & throat (mm)	No. of tuyere	Dia. of tuyere (mm)	Fuel consumption kg/hr	Observations
:orn cob :nar	1.816	90	70	3	5	4.1	High CO content
:harcoal	2.5	90	70	3	5	3.6	
:orn cob :har	2.3	90	70	3	5	4.0	Low pressure drop (tuyer outer length reduced)
-do-	1.0	90	70	3	8	4.2	Insulated fire box
-do-	6.0	90	70	3	8	3.8	Engine operated
-do-	6.71	90	70	3	8	3.8	Leakage at engine inl
-do-	8.32	90	70	3	8	3.92	Engine operated
-do-	8.4	90	70	3	8	3.92	No leakage at engine inlet

(Table 2 contd....)

Table 2 contd...

G-50

Fuel used	Temp. at grate (°C)	Oxidation zone temp. (°C) +	Gas outlet temperature (°C) ++	%Co	$\%H_2$	$\%O_2$	$\%CO_2$	$\%N_2$
Corn cob char	420 - 450	1100	269	23.87	5.669	3.051	4.408	62.994
Charcoal	584 - 620	1000	308	24.306	4.282	3.984	2.625	64.803
Corn cob char	370 - 500	1200	309	19.699	6.403	4.084	5.534	64.28
-do-	480 - 500	1100	320	25.867	5.786	1.933	4.071	62.343
-do-	550 - 600	1200	330	19.412	6.264	2.241	7.369	64.714
-do-	500 - 550	1300	320	7.0	2.237	12.937	4.964	72.875
-do-	450 - 550	1200	320	24.946	4.53	2.14	4.951	63.433
-do-	450 - 550	1200	320	18.519	5.952	4.937	5.395	63.433

+ Measured randomly

++ Temp. when gas sample was drawn

NOMENCLATURE USED

^{o}C	=	degrees centigrade
cms	=	centimeters
gm/cc	=	grams per cubic centimeter
ft^3/min	=	cubic feet per minute
Hp	=	Horse power
hrs	=	hours
kg	=	kilogram
lit/min	=	litres per minute
MJ	=	Mega Joule
Nm^3	=	Normal meter cube
SCM	=	Standard cubic meter
sec	=	second
"	=	inch
%	=	percentage

LIST: ZERO = 0.-0.29

70

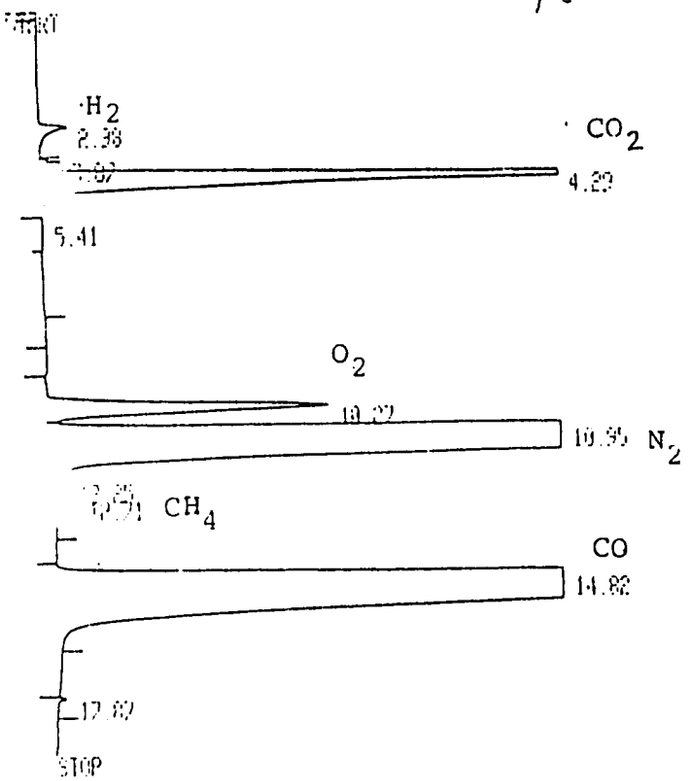

RUN # 1 NOV/06/85 12:13:52
WORKFILE ID: B
WORKFILE NAME:

NORM

RT	AREA	TYPE	CAL #	AMOUNT	
2.38	60024	PB	1	5.286	H_2
4.29	1607100	VB	2	4.071	CO_2
10.27	550920	BV	3	1.933	O_2
10.95	1.9967E+07	VV	4R	62.048	N_2
12.71	82927	VB	5	0.295	CH_4
14.82	8312200	PB	6	25.867	CO

TOTAL AREA= 3.0780E+07
MUL FACTOR= 1.0000E+00

74

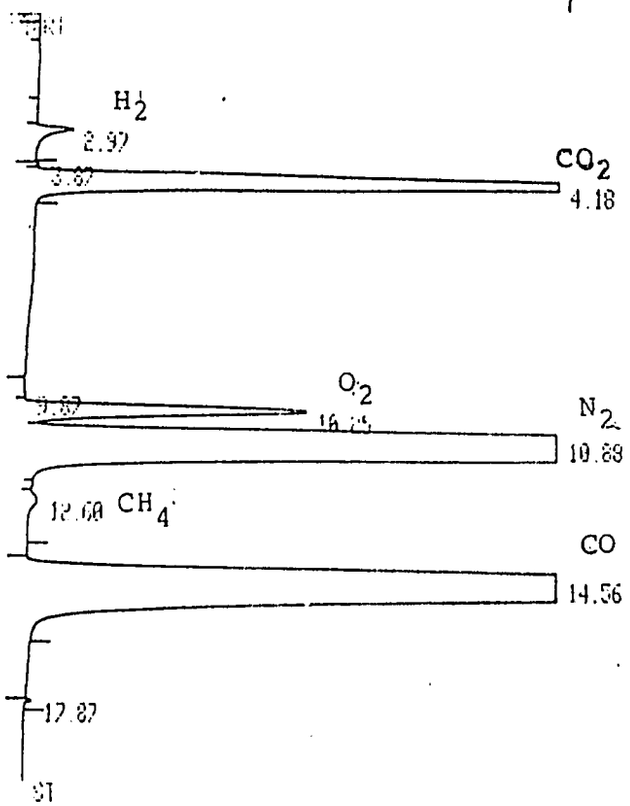

RUN # 2 NOV/06/85 12:45:17
WORKFILE ID: B
WORKFILE NAME:

NORM

RT	AREA	TYPE	CAL #	AMOUNT	
2.97	56410	VB	1	5.487	H_2
4.18	2232200	VB	2	5.703	CO_2
10.25	525900	VV	3	1.860	O_2
10.88	2.0082E+07	VV	4R	62.933	N_2
12.60	38468	VB	5	0.138	CH_4
14.56	7792200	PB	6	23.879	CO

TOTAL AREA= 3.0728E+07
MUL FACTOR= 1.0000E+00

Typical Gas Chromatograms

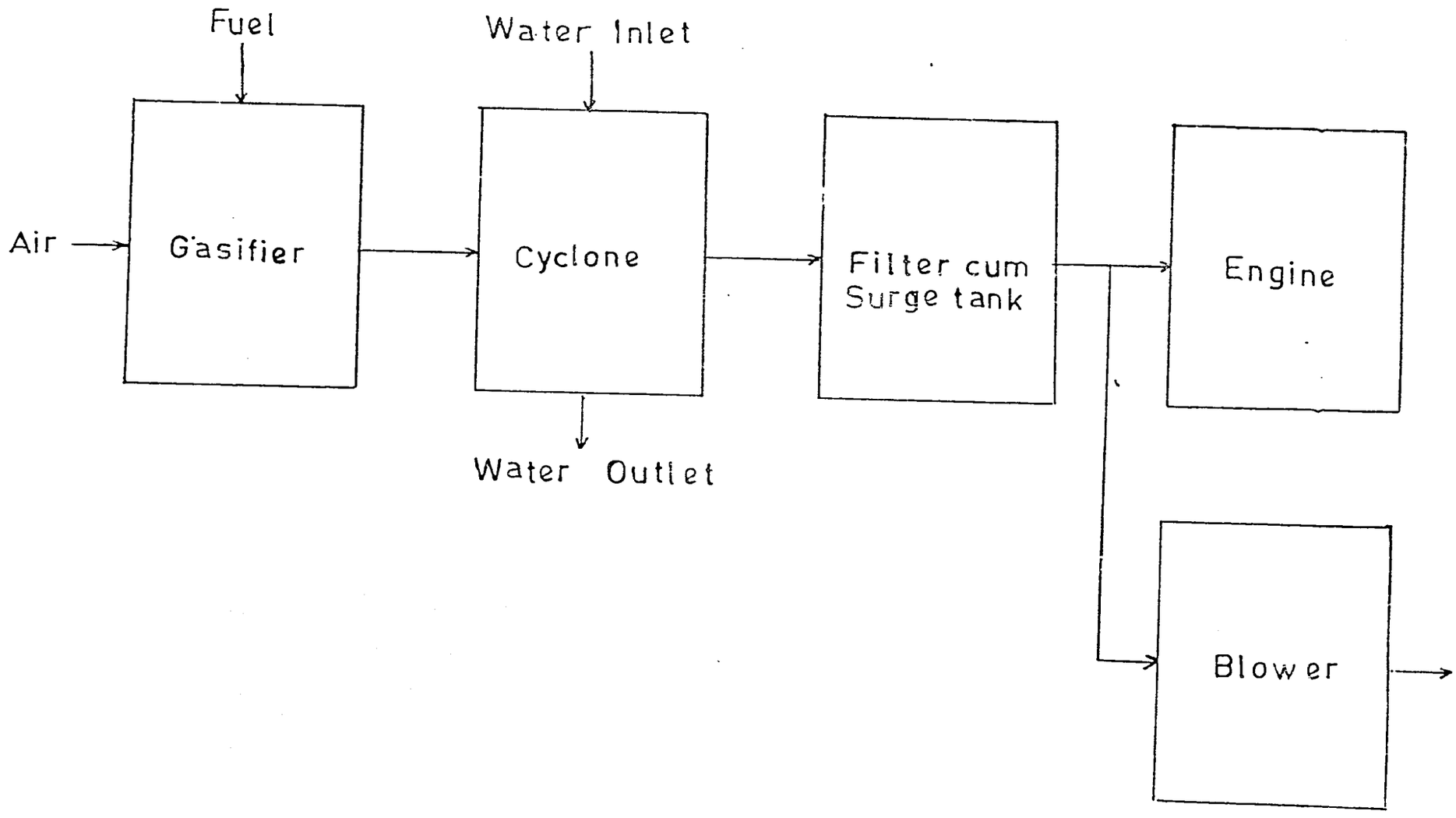

1. GASIFICATION FLOWSHEET

INDEX

1. Top Shell
2. Bottom Shell
3. Throat Support Plate
4. Throat and Cone Plate
5. Vertical Grate
6. Horizontal Grate
7. Brick Lining
8. Blower Inlet
9. Shaker Rod
10. Cone for Ash Removal
11. Stand
12. Gas Outlet Pipe
13. Air Tuyere
14. Ignition Port
15. Flange
16. Fuel Feeder
17. Thermocouple Port

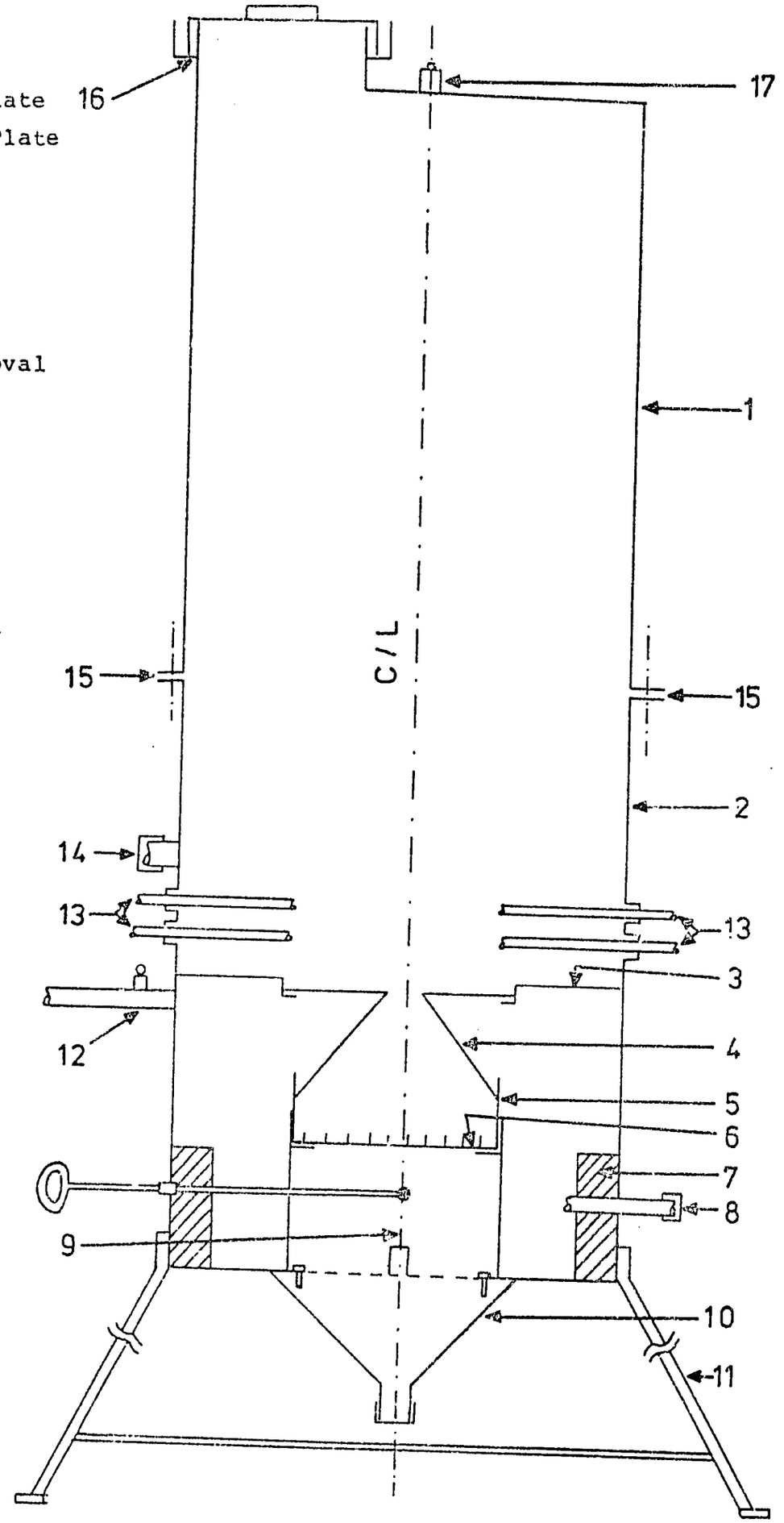

2. GASIFIER G-45

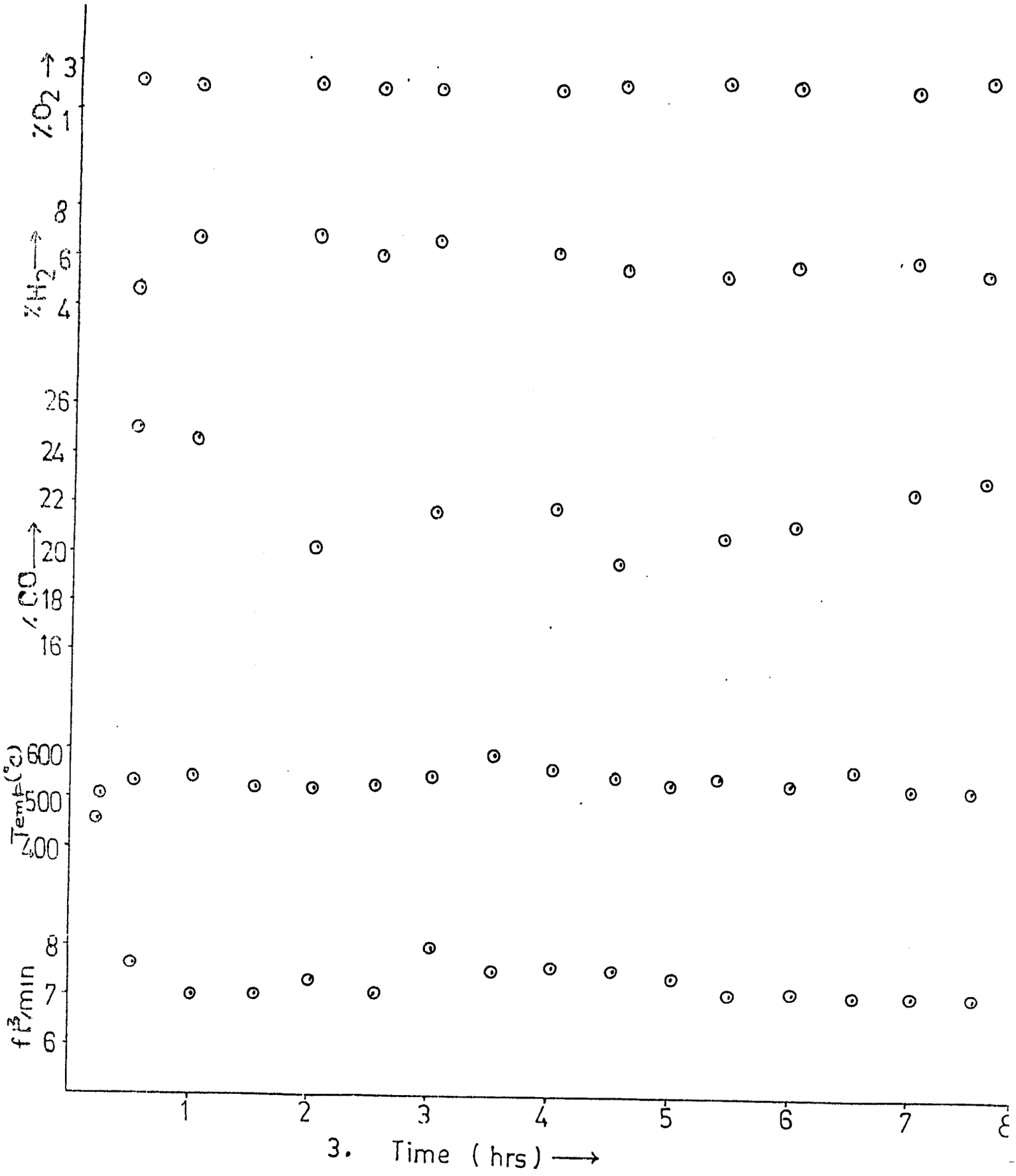
%O2 →
3
1
%H2 →
8
6
4
% CO →
26
24
22
20
18
16
Temp (°C)
600
500
400
ft³/min
8
7
6
1
2
3
4
5
6
7
8
Time (hrs) →

3.

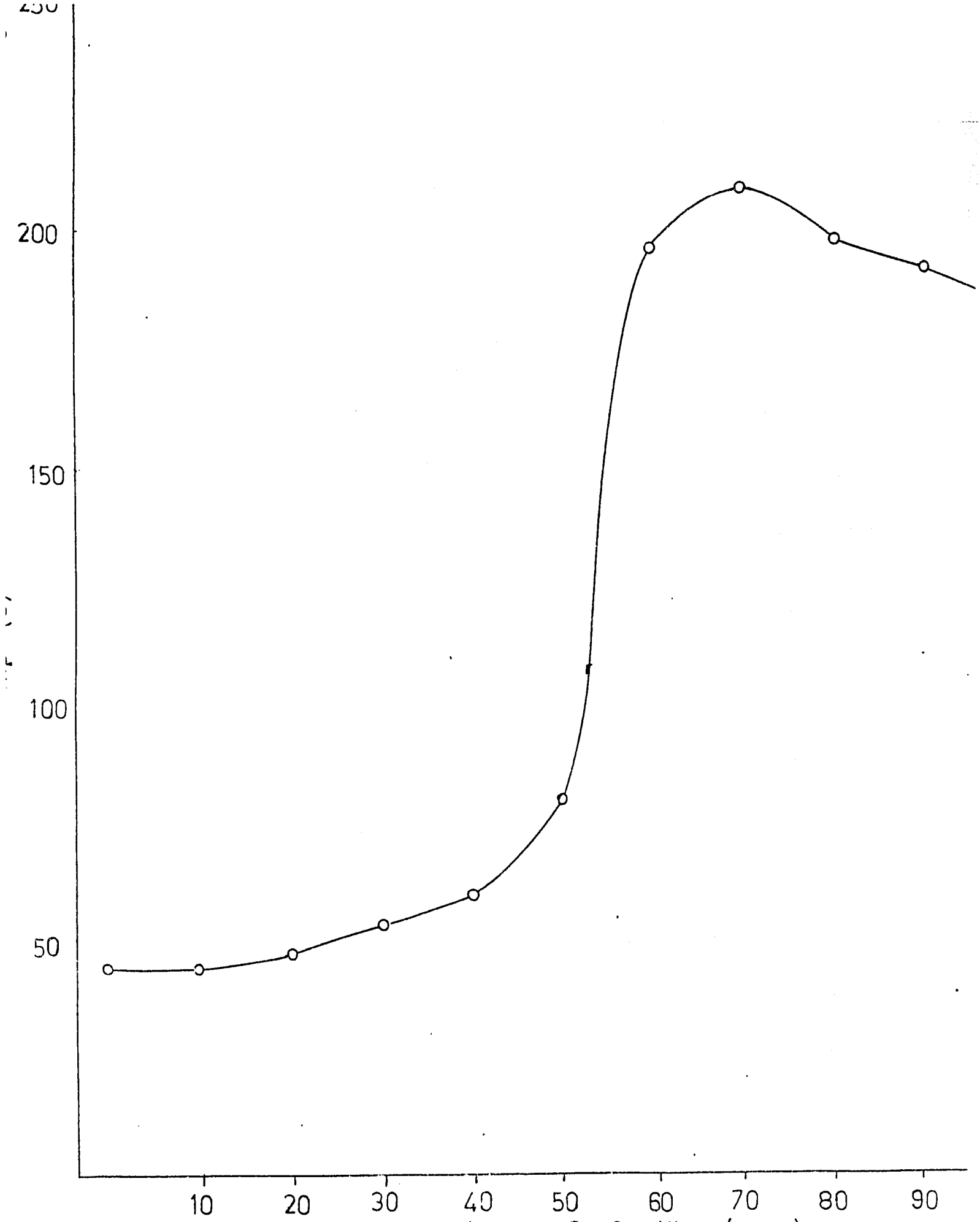

4. Vertical Length Of Gasifier (cms)

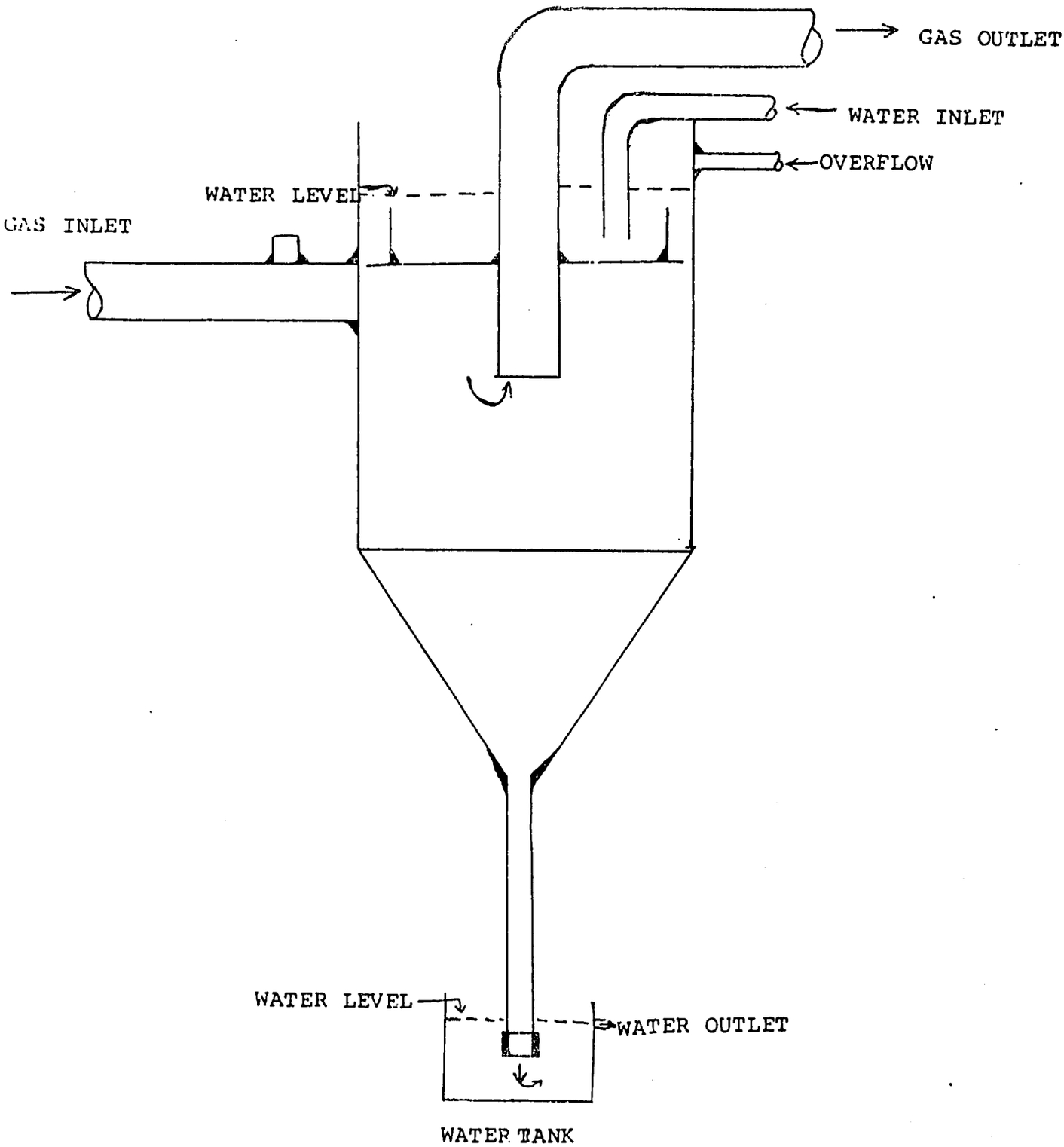

5. WETTED WALL CYCLONE

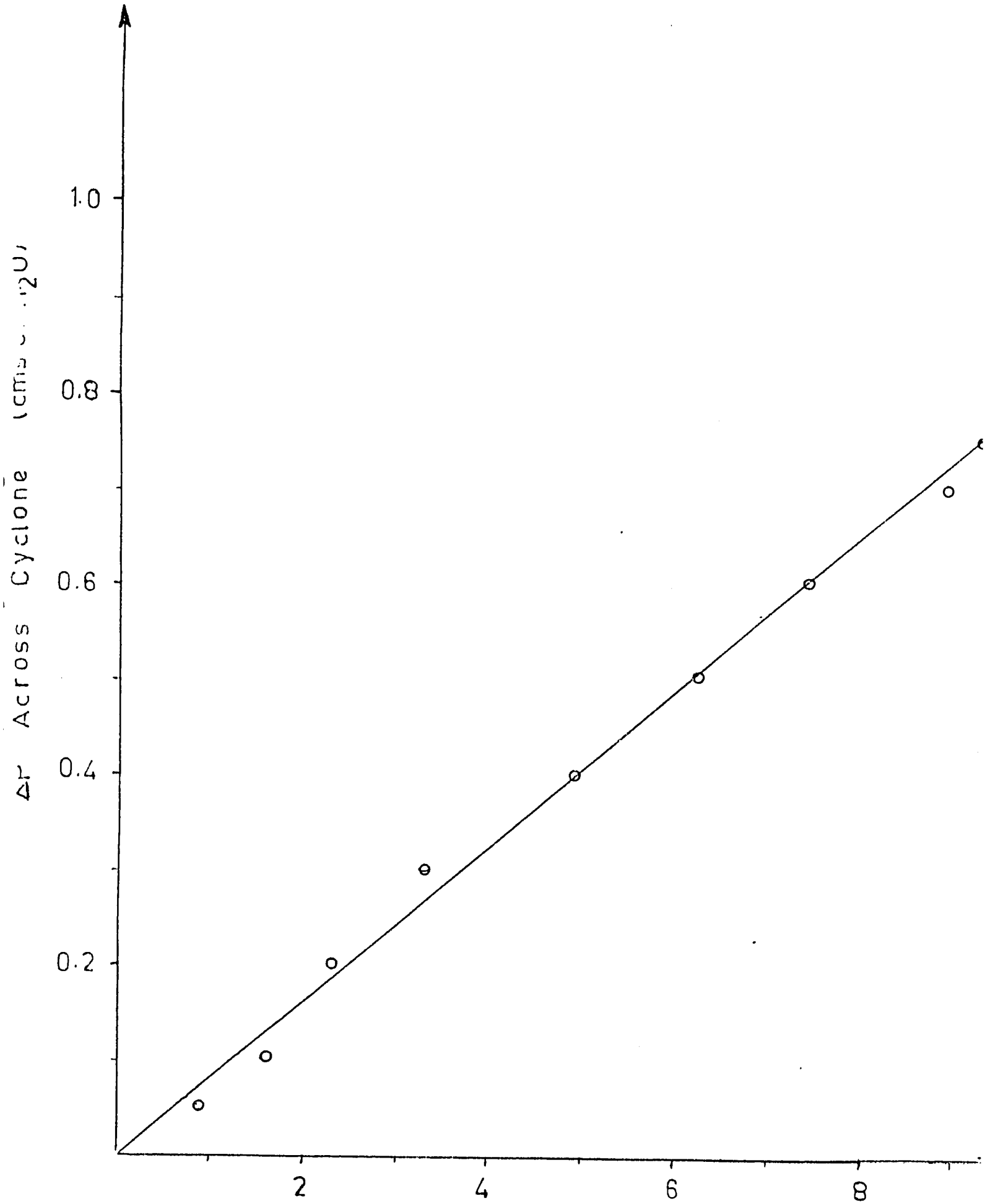

7. Flow Rate Of Gas (CFM)

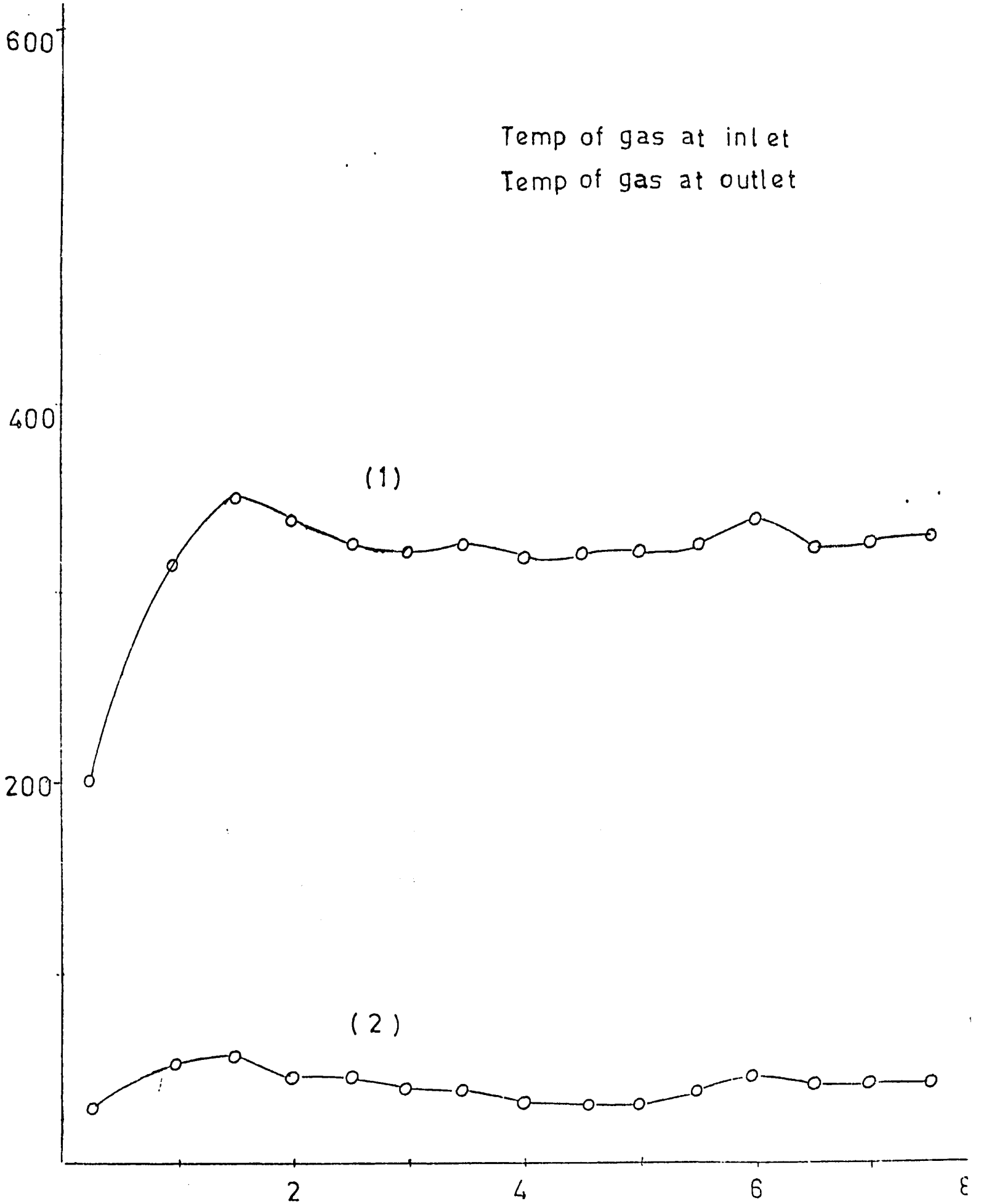

8. Time (hrs)

UTILIZATION OF PRODUCER GAS IN A SMALL HORSEPOWER ENGINE

H.B. MATHUR

Indian Institute of Technology
New Delhi, India

(Paper not available at time of publications)

FIELD IMPLEMENTATION OF GASIFIER SYSTEM FOR IRRIGATION

M.B. Durgaprasad
V.K. Jain
R.N. Pandya
S.R. Patel
K.S. Shah

Jyoti Solar Energy Institute
Vallabh Vidyanagar
Gujarat, India

FIELD IMPLEMENTATION OF GASIFIER SYSTEM FOR IRRIGATION

BY

MB DURGAPRASAD*, VK JAIN*, RN PANDYA*
SR PATEL* AND KC SHAH*

PAPER PRESENTED AT THE

THIRD USAID/GOI WORKSHOP ON
ALTERNATIVE ENERGY RESOURCES
AND
DEVELOPMENT
COAL CONVERSION
AND
BIOMASS CONVERSION

MAURYA PALACE - SHERATON
NEW DELHI, INDIA

DECEMBER 5-7, 1985

---

* Jyoti Solar Energy Institute
Vallabh Vidyanagar - 388 120
Gujarat, INDIA.

FIELD IMPLEMENTATION OF GASIFIER SYSTEM FOR IRRIGATION

MB DURGAPRASAD, VK JAIN, RN PANDYA
SR PATEL AND KC SHAH
Jyoti Solar Energy Institute
Vallabh Vidyanagar-388 120
Gujarat, INDIA

1.0 Introduction :

The paper presented at the Second Workshop dealt mainly with the development of 3.7kW gasifier system for irrigation.[1] In the present paper, field performance of the gasifier system and some economic aspects as well as some problems and suggestions for transfer of gasification technology to the field will be discussed.

In India, the energy requirement for various stationary applications such as water pumping, operation of various agricultural machineries and captive power generation, comes mostly from diesel fuel and this accounts for 35 to 40% of the total diesel fuel consumption. There are about 3.6 million diesel engine-pumpsets, in the capacity range of 3.7 to 15kW, operating in the country.[2] This number is likely to increase by half a million every year.[3] If biomass gasifiers are used for running these engine-pumpsets, substantial saving of diesel fuel can be achieved. For this, development of reliable biomass gasifier system is essential.

2.0 Description of the Gasifier System :

The gasifier system installed as a demonstration unit at village Johr, about 7km from Jyoti Solar Energy Institute,

runs a 3.7kW diesel engine-pumpset. The fuel used in the gasifier is wood. The system has been described in detail elsewhere.[4,5] So only the salient features will be described here. It is a downdraft gasifier with 50mm as the hearth diameter. It has side air tuyers. The air for gasification is preheated by heat exchange with the gas produced. Generally M.S. is used as the material of construction except for the combustion and reduction cones and the air nozzles where SS 310 is used. This is one of the earlier designs developed at Jyoti Solar Energy Institute.

The gas clean up unit consists of a venturi scrubber, a packed bed water scrubber, a dry filter and a security filter. The technical specifications of the entire system are given in Table 1.

Table 1 : Technical specifications of the Gasifier System

A. Gasifier

1. Model	G-50, Downdraft
2. Material of construction	Generally M.S. except for hearth and air nozzles where SS-310 is used.
3. Rated capacity Nm^3/h	12
4. Air nozzles, Nos	6
5. Hopper capacity, kg	25
6. Combustion zone temperature, ^oC	1100
7. Outlet gas temperature (after heat exchange with air) ^oC	125
8. Fuel used	Wood (50mmx40mmx15mm)

B. Gas Cleanup unit

1. Venturi Scrubber	Throat dia. 40mm, direct contact. Cocurrent water jet.
2. Water scrubber	Packed bed (Pebbles), Counter current.
3. Dry filter	Waste cotton
4. Gas temp. after cooling	Ambient
5. Total pressure drop, mm of water	45

C. Engine - Pumpset

1. Make & HP of engine	Field Marshal, 5hp Water cooled
2. R.P.M.	1500
3. Pump size	80mm x 80mm
4. Pump capacity, l/s	15
5. Total head, m	15

A simple T connection is used for air gas mixing and no modifications were done on the engine. Fig. 1 shows the schematic arrangement of the gasifier system.

3.0 Field performance of the System :

Before installing the gasifier system in the farmer's field, the farmer was trained at the Institute as well as in the field in 'operation and maintenance' of the gasifier system. The unit was installed in the field in the month of March 1985 and it has run for nearly 500 hrs by the end of October 1985 without any technical problem. The daily performance

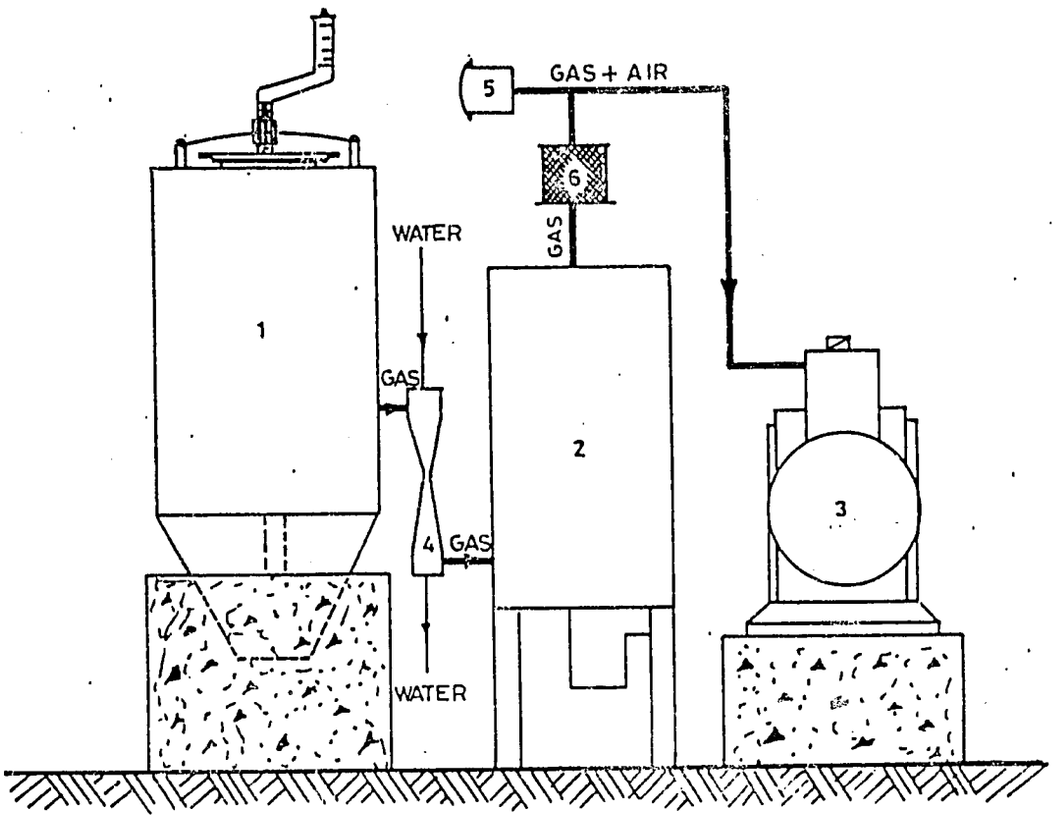

1 GASIFIER
2 GAS CLEANUP UNIT (WET & DRY)
3 ENGINE - PUMP SET
4 VENTURI SCRUBBER
5 AIR FILTER
6 SECURITY FILTER

FIG. 1 SCHEMATIC DIAGRAM OF GASIFIER SYSTEM

JYOTI SOLAR ENERGY INSTITUTE
VALLABH VIDYANAGAR 388 120
GUJARAT

data of the gasifier system are collected by the farmer as per the data sheet shown in Appendix 1. The data so collected were analysed to evaluate the performance of the system. The average wood consumption is 3.4 kg/h with an average diesel consumption of 0.36 l/h. The percentage replacement of diesel works out to be 60. The complete performance data are summarised in Table 2.

Table 2 : Field performance of the gasifier system

a) Total time of operation, h	500
b) Average wood consumption, kg/h	3.4
c) Average diesel consumption, l/h	0.36
d) Average gas temperature at gasifier outlet, °C	125
e) Average gas-air mixture temperature, °C	36
f) Average pressure drop across venturi scrubber, cm	0.6
g) Average pressure drop across security filter, cm	6.0
h) Average pump discharge, l/s	12.7
i) Total head, m	11.08*
j) Water horse power, kW	1.03*
k) Engine brake horse power, kW	2.16*
l) Diesel replacement, %	60

4.0 Some Economic Aspects of the System :

The operating cost of the gasifier per kwh of shaft power is 70 P taking the cost of wood to be 40 P per kg and that of diesel to be Rs. 3.30 per litre. Just for comparison, if the unit is to be run by diesel alone, the cost will be

---

* calculated values

Rs. 1.07 per kwh of shaft power and 86 P per kwh of shaft power when electricity is used. It should be noted that the cost per kwh of electricity is heavily subsidised by the Government for the agriculture sector. Also it is worth mentioning that in some parts of the country, the cost of wood is so high that it may not be economically viable to use wood gasification systems.

5.0 Problems and Suggestions for transfer of gasification technology to the field :

1. The gasifier should be simple in construction, easy to operate and maintain. Besides it should be inexpensive, so that it is within the reach of an average farmer.

2. An average farmer in India, operates the engine-pumpset himself and he can not afford to employ a mechanic. So the farmer himself has to be trained in operation and maintenance of the gasifier system for which he should be willing.

3. In order to propagate biomass gasification technology, a number of demonstration units should be installed all over the country at selected sites. This will also help quick adoption of this technology by the farmers.

4. Farmers should be made aware of the carbon monoxide poisioning, fire and explosion hazards during improper handling of any gasifier system.

5. Some farmers think that the water pumped using the gasifier system is not good for irrigation. This superstitious belief in the minds of the farmers should be removed by educating them.

6.0 Conclusion :

A wood based gasifier system to run a 3.7kW diesel engine-pumpset was successfully installed in a farmer's field. The unit has clocked about 500 hrs without any technical snag. The average saving of diesel is 60 per cent. The operating cost of the unit is 70 P per kwh of shaft power whereas with electricity and diesel, the corresponding values are 86 P and Rs. 1.07.

7.0 REFERENCES

1. MB Durgaprasad and RN Pandya, Development of Wood-based gasifier engine systems. Presented at the Second US/AID/GOI Workshop on Alternate Energy Sources and Development Coal Conversion and Biomass Conversion, New Delhi, Feb. 1985.

2. Directory and Year book, 1983, Times of India Press, Bombay, PP-93, 97, 98.

3. BC Jain and F Vyarawala, Biomass Gasification its relevance to India and Development work at Jyoti Limited. Presented at theSecond International Producer Gas Conference, Baundung, Indonesia, March 1985.

4. VK Jain, MB Durgaprasad and SR Patel, Field Implementation and Problems of transfer of Biomass Gasification Technology at the Village level. Presented at the Second Convention of Bio-energy Society of India, Hyderabad, September 1985.

5. VK Jain, SR Patel and MB Durgaprasad, Performance and Economic Evaluation of a Gasifier System in the Field. Presented at the seminar on Biomass Gasification Technology, Jyoti Solar Energy Institute, Vallabh Vidyanagar, October 1985.

* * * * * * *

S*

APPENDIX - 1

JYOTI SOLAR ENERGY INSTITUTE - VALLABH VIDYANAGAR

DAILY DATA SHEET

DATE:

Project Name : INDO/USAID
User's Name : Vinodbhai Patel, Johr

Gasifier Model : G 50
Date of installation : March 1985

Engine pumpset specifications

Make : Field Marshal
HP : 5
RPM : 1500

Pump capacity : 15 l/s
Total head : 15m

Initial water meter reading :
Final Water meter reading :

Initial Diesel tank reading :
Final Diesel tank reading :

Wood used

Name :
Wood charged (kg) :
Av. size : mm x mm x mm
Cost per Kg :
Wood consumption Kg/h :

Initial hourmeter reading :
Final hourmeter reading :

Sr. No.	Recording Time	Engine RPM	Diesel consumption		Outlet gas Temp. (°C)	Gas-Air Temp. (°C)	Remarks
			Quantity (ml)	Time (Sec)			
1							
2							
3							
4							
5							
6							
7							
8							

Cotton waste used :

Weight (kg) :

Cost per kg :

Maintenance (if any) :

Area irrigated :

Crop :

Sr. No.	Name of Visitor	Remarks

S*

QUESTIONS AND ANSWERS - BIOMASS CONVERSION, MORNING SESSION, DECEMBER 6, 1985

S. Guar - IIT-Chemical Engineering Department

Q. Since you have studied only one raw material, can this gasifier be used with different types of raw materials?

A. This gasifier can be used with any charred biomass material, but the size of the fuel has to be taken into account. We have tested with more than one fuel. We have tested with corn cobs, with briquetted corn cobs, and with charcoal. Trial tests with cotton stock, ground nut shells, pine needles, and charred pine needles, are going to be done later on.

Q. Are corn cobs safe?

A. Yes.

Q. Are you going to use a village level gasifier that uses direct biomass gasification?

A. We are not trying direct biomass gasification in this system. We are first doing the pyrolysis of the biomass in the charring unit and then the charred biomass materials are being tried in this unit. Charring is done because you would otherwise require a very sophisticated, high priced cleanup system, and that a villager cannot afford. We think that even if we reduce certain amounts of efficiencies of the system, the cost should be the main constraint when designing this gasifier. By pyrolyzing, high hydrocarbon formation is eliminated.

Q. What is the ash reformation temperature when you clinker the ash?

A. The formation temperature for this particular clinker was 1600°C, but it varies from fuel to fuel. For rice husks, the ash temperature is much less - 700°C. We will check to see whether gasification of rice husk is possible or not in this particular unit. Otherwise, the ash temperature varies according to biomass characteristics. But the material we have tested, the ash temperature lies between 1600-1800°C and the temperature we are maintaining in the gasifier during oxidation is not more than 1200°C.

Q. What is the carbon conversion rate?

A. The total unreacted carbon that we collect from the ash pit accounts for only 5% of the total feed. The rest of the carbon is converted either in carbon dioxide form or in carbon monoxide form. The CO_2 to CO conversion ratio, on an average, is 95%.

Q. Our emphasis is to make the village models which you started. Some other commercial houses are working at it, too, and one of the commercial houses has already exported a large number of units. However, while we were feeling very much elated that India has exported gasifiers, we must be very cautious about some of the operational considerations when it comes to these gasifiers. My first question, gentlemen, since we are talking about about a village model, is what should the parameters of costing be - it could be 5 thousand, 10 thousand, 20 thousand, 50 thousand. Also, when we are speaking of village models, we are very earnestly waiting for some of your models to be optimized at the village level. Would you please ensure, unlike this report that has come from overseas, that there are the least possible operational problems involved?

A. Please refer to the slide for the answer to your question. The answer to the first question, is the cost of this unit is 1500 rupees.

Q. Is that only for the gasifier?

A. It is only for the gasifier; the cyclone will not cost more than 200-300 rupees because you are taking a barrel and putting two pipes in it and a sheet over it.

The gasifier that you have just seen does not have a single valve to be controlled, and there is only one flange which is provided for easy access to every part of the gasifier. That flange does not require any technical knowhow to install. It just screws in there, and you tighten it. Nothing more. That is the only thing which we have in this whole system to be controlled. You just feed the material, and start the suction, and the gasifier operates. We have taken into account that not a single valve has taken this form in the system. You will not see any valves throughout the system.

Q. When can you market this gasifier?

A. At present, we are satisfied with the functioning of this gasifier, but there are always certain deviations from the critical tests in the laboratory and the practical test. So, we are going to install this unit in the field within a week. The sight selected to put this unit is 40 kilometers from here. We will be testing it there, and when we are satisfied with those trials, we will begin marketing it.

Q. What do you suggest for avoiding the clinker formation?

A. We have found this to be a problem, and the remedy is that we are preparing a table of what the air tuyere diameter and the throat diameter should be, as a function of the half load, that is the gas output. If you have a gas output of 7.7 cubic meters per minute, and the fuel is charred corn cob, then the throat diameter has to be 47 mm, the diameter of air tuyere should be 8mm, and number of tuyeres should be 3. When the throat diameter is 47 mm and the air tuyere diameter is 8 mm you will not get clinker; we have tested this for 25 hours and this gives you the proper equilibrium between the oxidation and reduction zone temperatures. The clinker formation will lock up only when there is a fluctuation in this equilibrium.

Q. To what extent can the rice-husk bed avoid the fluctuations during performance?

A. The expansion of the rice husk bed is nearly 1 to 1.2 cm. The barrel of the rice husk filter has a diameter of 550 mm. We have it in an ordinary oil barrel. This can take the fluctuations into account for at least one minute, but not more than two minutes. By that time your system will be ready to go ahead with the functioning because there are hardly any fluctuations which we have seen. But this is taken as an extra precaution because if there is any fluctuation, there will be a de-rating in the engine. You can tell by the noise. You can just shake the bed and the thing will start functioning properly.

Q. Has there been a commercial model made? What is the throughput?

A. We have not made commercial models to date with which we are doing the experimental trial runs. We'll be doing field trial testing of this unit in the near future and when we are satisfied with that unit will we go for commercial units.

Q. What will be capacity of that one?

A. That will depend on the customer demands.

Q. You said there were three tuyeres at different levels. Isn't that a parameter which the villager has to control, or do you prefix them?

A. We ask him what gas flow rate he wants, or which engine he wants to operate. When he tells us that he wants to run a 5 hp engine, then we will prefix the parameters, and give the unit to him.

Q. The producer gas which you are getting from this, what is the calorific value like?

A. The calorific value of the producer gas varies from 100-120 Btu.

Q. I would like to know if you have taken into account heat losses through the walls.

A. Yes, the temperature profile, and the maximum heat loss that I showed you was within 30 cm of the gasifier length, but we have now insulated the system totally and there is negligible heat loss across the system.

H.B. Mathur - IIT-Mechanical Engineering Department

Q. Please give us the fuel consumption/hour of the producer gas at the flow-rate of 7 cubic meters per hour.

A. The producer gas flow rate we have tried ranges from 5 cubic meters/hour to 15 cubic meters/hour. At 7 cubic meters/hour, the fuel consumption of charcoal was about 2.5 kg every two hours.

Q. What is the loading capacity of the gasifier? How long can it run without being reloaded?

A. It could run for 2 to 2½ hours, but after subsequent modifications of continuous charging, we now have an arrangement to feed 2 kg every 1½ hours. In the case of the Missouri gasifier, we can go for 15 to 20 hours without any constraints. This is because it has a continuous feeding arrangement.

Q. How does one initially ignite the gasifier?

A. First we moisten the charcoal and the we use it to light the gasifier. The system is ready to provide the gas within 15 to 20 minutes. However, we also use a blower at the beginning to initiate the burning of the charcoal.

Q. How do you analyze the producer gas?

A. We monitor the calorific value of the ga sexperimentally, using a gas calorimeter. The quality of the gas is determined by a gas chromatograph by taking samples of the gas and determining its composition.

Q. From an environmental standpoint, what is the optimum level of CO tolerable, 17-18% or 23%, as mentioned by one of the speakers? This is because two of our technicians have been seriously poisoned. What measures or precautions are you adopting to avoid possible poisonings?

A. What you say about CO poisoning is very true. Two possible causes of CO concentration being high are: One, leakage through the system, and two, unburnt CO in the exhaust. For the first cause we have mandated that the system be operated in either an open environment so that the CO concentration does not build up, or use an exhaust when working in a closed environment. One of the first objectives of this project is to determine how to avoid an accident due to CO build up. We are working on some measures and plan to propose these at the completion of the program. The concentration limits are supposed to be lower than 30 ppm every four hours, or else it becomes a tremendous health hazard.

Regarding CO from the exhaust, the CO in the exhaust of diesel engines is in traces, as opposed to that of a dual-fuel engine, when the concentration

is about 0.1%. Hence, it is important that we develop safety precautions which will ensure that pollution hazards of CO can be eliminated.

Q. I would like to know about the lubricants you will require since liquid fuels are used, the lubrication and cooling is done by the fuel itself. Under producer gas fuel conditions, the situation would be very different. Also, are you using CD type or SS type lubricating oils, or a combination of both?

A. We are using the normally used lubricants at the moment, namely, a combination of CD and SS type oils. However, the producer gas may contaminate the engine oil, thus causing degredation. At this time we have no data as to how it will effect the engine. After about six months of operation, we may get some initial information. Your question is an important one, and needs to be answered later on.

Q. How did you vary the compression ratio in your engine? Did you test the fuel properties, such as flash point, pour point, and other parameters?

A. We could go from a compression ratio of 15.5 to 17.2 by making minor adjustments on the engine. However, for larger compression ratios, far greater modifications, in fact an altogether different design, would be needed. Hence, you need engines designed specifically for producer gas, or a specific fuel.

The two vital properties of producer gas are calorific value, and composition, which we measure. We have not determined other properties, such as flash point or pour point because we think they are not of immediate concern.

M.B.Durgaprasad - JSEI

Q. What is the pump efficiency? Have you measured it?

A. No, we have never measured it. But I think the data given by the manufacturer is about 65%.

Q. Was the engine kilowatt that was listed, pump output or engine output?

A. It was pump output. We have measured the efficiency of one of the pumps. It seems the claim is higher than it actually is. It is probably 45-50 kw.

Q. Who designed the gasifiers? How much training did the farmers receive?

A. The gasifiers we have are of our own design. We gave the farmer training for about a week in the institute, and about 15 days in the field. During those 15 days, one of our mechanics went and gave the training. So the major training was given in the institute for a week. Our farmers are very good at operating these diesel engines, and are capable of doing it. Even when looking at all these gasifiers, they are not scared of them.

Q. What is the costing factor? How many days are involved?

A. I can't give you that figure. In each of these cases it depends on what kind of manual we put down for a user. It probably has not been done to that extent. We are in the process of writing a manual for that purpose. With a manual to refer to, I believe that a man who can maintain an engine well, will be able to maintain a gasifier with little or no difficulty. Looking at a situation of this kind, there are a few points which will have to be attended to. If we identify those, then I don't think that more that a day or two of experience will be necessary. We are trying to evolve a mechanism by which the actual meeting spots can be predetermined for the purpose of communication and training. I believe it will not be large component, as I see it.

One of the purposes of this project is to have one or two controlled demonstrations. The engineers and technicians from these facilities -- Jyoti, or IIT -- will be actively involved during the field demonstration. All of the observations and training are going to be documented as manuals, as you pointed out. That manual will be further used as the technologies are proven and all of the operating problems have been taken out. It will be used for further application of the technology. So, you are right; the output of these three projects will be operating, design, and installation manuals.

What we are aiming at, at the end of these discussions is the interlinking of the three projects, and how the ends are to be achieved and what the means of achieving them are. So, we may have to start from this end, and then go backward to the various other components.

For your information, a seminar or workshop was organized on the gasification of biomass at the same institute very recently, where Mr. Maheshwar Dayal delivered the keynote address. All the visitors were taken to the village to see the operation, and to feel fully satisfied with the operations being performed by the farmer himself. There is no doubt you will go to that extent of the details that we are aiming at, but just to start with, we are building the confidence. There are two points which have been raised about the demonstration and the training. First, the manual is being revised as soon as possible, which may have the bearest training. But these points will be taken care of, along with the environmental aspects also. That is why the program is now opened for discussion. We would like to have your suggestions. More comments should be included so that we get the maximum information that can be utilized. So, I think that at the end of one more discussions we should have some good, critical points about the interlinkings of the three projects, which is our aim.

Q. Is tar a problem which you have faced, or do you have no tar at all?

A. Luckily, we don't have tar problems. When Mrs. Parikh came to see our demonstration unit, I showed her this cotton we have used. We don't have a tar problem. Most of this tar definition itself is not clear. One should not mistake tar to be sludge, or water and soot.

Q. Is it impossible to distinguish tar from sludge, or water and soot?

A. For a layman it may be. Just by looking at it, it is impossible. If you look at in a lab, you can distinguish it from other byproducts. But in the field, you cannot.

Q. After how many hours do you change the cotton waste?

A. We change the cotton waste after 12 hours of operation. We have given the farmer a simple manometer so he can see the pressure drop. If the pressure drop is more, then he changes the cotton waste.

Q. Is it possible to reuse the cotton waste if you wanted to? Isn't there something else you could use?

A. No. We have tried to use coir, and unfortunately it just doesn't seem to work. It doesn't absorb moisture, so there are other things we have to try. You are right in saying that because cotton waste is also expensive, we should look for alternative materials.

Q. When do you open the engine to change the oil?

A. We maintain the same schedule as recommended by the manufacturer. We have

changed the oil after 250 hours of operation, whatever the schedule is that is given.

C. I would like to re-emphasize Professor Mathur's point regarding the use of locally available materials. In this case, if coconut husk is available somewhere, we want to utilize the material and reduce the cost. This is a very valid point. It is only a question of whether it is fully dried or used in its wet form. What I am really worried about is that there are so many points to be taken in each of these aspects -- whether it is a gasifier, or cleanup, or engine system -- the number of parameters that need to be studied are so numerous that we need to make a provision for combinations. Hence, it becomes a gigantic problem itself. I think at the end of this discussion we have to look at this point. The problems are really very complex and very large. We need to determine in what way should we look at this whole problem so that it becomes worthwhile at the field level. So, I leave this question for the end.

Panel Discussion

Q. The chairman has set the tone of what I was going to say; the material balance, the energy balance, the ultimate cost benefit of the production of utilities for the required power for irrigation. There are many agricultural wastes. We could gasify them steadily to produce charred material or we take the other route through biogasification by fermentation. The bacteria would gasify to give a rich gas having calorific heat of 600 btu per cubic foot, and in the process, you get material compost which is a very good nutrient which can be put back in the soil. This would be a better route than gasification out of the agricultural residue. You not only get gas that you can use but in the process, you get processed biomass which can be put back into the soil. You produce more gas, and more agricultural residues; a good snowballing effect which I consider preferrable. I would like your comment on this.

A. I will not contest you on this. Why don't we ask Dr. Vimal in the morning about the case of utilization of biomass for gasification and for the irrigation purpose. One has a different solution at each of the different places. Any technology will have certain advantages and disadvantages, including this biogasification. Maybe in terms of technology, it has some disadvantages also. We are working on a parallel route basically; a route parallel with an alternative to this utilization of biomass for a special purpose. When we are talking of this special purpose; for example, we are thinking of using these gases in irrigation and that is why we are using charred biomass materials.

Q. Isn't that very wasteful? 20% of the carbon is utilized in gasification. The rest is going to waste.

A. In terms of energy efficiency during charring itself, we are using only 40-50% of the energy. The remaining 50-60% of the energy is being lost during charring. But, we are getting some other advantages in lieu of that, as I mentioned in my presentation. There are advantages to using charred biomass materials in the small gasifiers.

Q. What types of atmospheres have been used during your tests?

A. We have used nitrogen atmospheres, and steam.

Q. Do you find any differences in your thermal gravimetric analysis?

A. Yes. The curve of weight loss that you get with temperatures is different in different cases.

Q. Have you been able to establish optimum conditions for gasification?

A. From TGA analysis we do hope to find some optimum conditions for gasification. In the case of pyrolysis, or gasification, we are going to use partial combustion, a limited quantity of air, and charring in the absence of air.

Q. The temperatures that reach the pyrolysis in the pyrolysis tube in the gasifier are taking place before using a downdrop gasifier. Because it will be above the oxidation door, and you are taking the results that are more likely to represent the entire absence of oxygen, what is going to happen?

A. Since TGA has been carried out on this gasification using steam and nitrogen atmospheres, and steam and air atmospheres, the temperatures developing gradually in the beginning represent more of a charring process and, subsequently, the gasification process is also being carried out in the same.

Q. But the TGA for the biomass showed that there is a very rapid decrease in biomass weight; therefore it is a very rapid process and the temperature is more or less going to remain constant during that period.

A. If you remember those curves, the ones which are directly for biomass, there is a rapid loss at about 300-350°C. That, in fact, represents the removal of volatile matter from the biomass. In the case of charred samples, the direction in which it occurs is beyond 600°C. That represents the gasification impression.

Q. What is the volatile left in your char? What is the volatile content of the char you are feeding the gasifier? What will be the tar content after cleaning? What is the measurement that shows that it really does happen that way? What is the compression strength of your particular mark in the reduction pool where it is likely to come from?

A. Regarding the volatile matter in the char fuel which you use for gasification purposes, we do not intend to remove the volatile matter completely. In fact, the volatile matter in the biomass may be up to 10 to 20% after charring. That means that the fuel we are using for gasification will still contain about 10 to 20% of volatile matter. We don't expect the volatile matter to improve the thermal efficiency of the system. Regarding tars, we have not carried out actual experiments with the gasifier yet. We are carrying out some experiments on the gasifier that we got from USAID, right now, and we are developing a gasifier. We feel that this tar problem is not going to be there when we use pyrolyzed briquetted fuel for the gasification.

Q. What is the compression strength when it is being pyrolyzed, since it is going to pass through the gasifier? It is not yet a cold condition. It is the hot condition that is the problem.

A. No, pyrolysis is going to be done separately in a drum.

Q. When your char product is passed through the gasifier, it is going to be heated. The one question I have is when you have a 10 to 20% volatile still left in that particular case, that is going to be pyrolyzed at around 600°C, or just below. That is when high tar is likely to form. Are you trying to say that no tar is going to come out?

A. In this downdraft gasifier, the gases which are coming from this fuel are passing through this high temperature zone and during this, the cracking of the tar, or what is left of the tar, will take place, and it is not going to create a problem in the gases that come out.

C. I think that the question you have raised about tar is very, very important. However, I think the measurements have not been made so far. I think we will be able to answer some of the questions which have been asked, at the next workshop. Measurement of these aspects is an important task because just to carry out the experiment is one thing; exact measurement of the tar, the volatile left, and other things is what we are looking for. I know only that the measuring equipment is arriving from USAID and other places, and they will be able to answer some of these questions later on. They have not started work on the gasifier yet. It is only the first part which is involved in the preparation of the char. But some of the measurements which we are interested in are only being taken in the beginning. I think it is premature to answer some of the questions that have been asked. I think they have been taken note of. Are there any other questions?

Q. What is the level of activation energy?

A. I don't think I have the figures actually. I will have to let you know.

Q. What are the economics of the system?

A. The economics of the system, as I said, depends on the special applications, especially in remote areas where other forms of energy are limited. This will have applications in remote areas with the rising cost of electricity and diesel. Also, the nonavailability of some of these things in some remote areas will allow the system to have tremendous utility. If this irrigation can be enhanced by developing the technology, biomass production will be further enhanced, and it will have a positive effect. But as far as the substitute economics are concerned, we have not been able to determine them, but we are going to work it out, of course, and see what it means.

PRELIMINARY EXPERIENCE WITH A THROATLESS GASIFIER ENGINE CUM SYSTEM

Anil K. Rajvanshi

Director
Nimbkar Agricultural Research Institute
Phaltan, Maharashtra, India

Preliminary Experience with a Throatless Gasifier cum Engine System.

by

Dr. Anil K. Rajvanshi,

Director,

Nimbkar Agricultural Research Institute,

PHALTAN 415523, Maharashtra, India.

ABSTRACT

Preliminary experience with a small scale (3.7 KW) throatless gasifier/engine system running on *Leucaena leucocephala* (Subabul) wood has been obtained. A 3.7 Kw Diesel Engine has been running for about 140 hours on the producer gas. With maximum load (3.7 Kw) an average diesel substitution is between 55-60% whereas for partial loads (2.6 Kw) it is between 60-70%. However for short period (half hour to one hour) the substitution has been as high as 80%.

A simple and efficient wet scrubber has been utilized to cool and clean the gas.

1. INTRODUCTION.

Energy for water pumping for irrigation uses is one of the most important inputs in agriculture. Because of poor electricity situation and non-availability of diesel in certain areas farmers are put to great hardships regarding the non-availability of water for their crops. An alternative energy source for water pumping is therefore necessary.

Among an attractive alternative is biomass gasification. This paper presents preliminary experiments with a 3.7 Kw gasifier/diesel engine system running on Leucaena leucocephala (Subabul) wood.

2. GASIFIER SYSTEM SET UP.

Figure 1 shows the schematic of the system set up. Below are the details of various components of the system.

A. Gasifier : The gasifier is a throatless one with both biomass and air flowing from the top. The central tube is 15 cm diameter and the grate is attached to the ash pit so that it can be easily vibrated. The vibration of the grate is provided by those from the engine.

B. Fuel used : The fuel for the present system is wood from Leucaena leucocephala (Subabul). Various sizes of the wood pieces were tried and an optimum size ($\sim$ 2.5 cm Ø and 4 cm long) was used. The diameter

of the wood piece is a function of age of tree. It was found that 1 to 2 years old trees gave the desired diameter. The moisture content of the wood used varied between 12-18%, with an average calorific value of 4000 Kcal/kg (completely dry wood).

C. Cleaning/cooling trains : Cleaning/cooling of the raw gas is done by wet scrubber. The gas passes through a perforated plate and then through concurrent moving water layer over charcoal. There are two such scrubbers in the system. The second scrubber also has dry cotton filter.

D. Engine : The engine used is a 3.7 KW Diesel engine (1500 r.p.m.). No modification has been done in this engine. The gas connection is via a T (Figure 1). The load on the engine pumpset was changed by a simple Pony break. Thus the diesel substitution was measured at different loads.

3. RESULTS AND CONCLUSIONS

The gasifier has run for about 320 hours. However, the engine/pumpset system on it has logged about 140 hours. Figure 2 shows typical diesel substitution and wood consumption curve at partial (2.6 KW) load. Similar results were obtained for varying loads. Average diesel substitution for full load varies between 55-60% whereas for partial load it is between 60-70%. Efforts are underway to improve this substitution.

After 80 hours of engine running it was opened and absolutely no tar or any gas particles were found either on the piston head, valves or cylinder.

The cotton for dry filter lasts for about 50-60 hours. After this time the quality of gas deteriorates thereby necessitating cotton change. About 750 grams of cotton has been found to be sufficient for cleaning. Also about 1.7 kg/min of water flow rate is used in the wet scrubber. Tests are continuing to evaluate other filter materials like fibre-glass etc. The pressure drop in the gasifier/scrubber system is about 15 cm of water.

The scrubber outlet water contains tars and condensables from the producer gas. An experiment is underway to see its effect as a weedicide.

Thus from the above preliminary study it has been shown that a throatless gasifier/engine system can provide between 55-70% diesel substitution running on Leucaena wood. Efforts are underway to increase this substitution and very soon the system will be installed on a local lift irrigation scheme. Efforts are also underway to study the effects of bed height on diesel substitution.

Acknowledgements : The financial support of Department of Non-Conventional Energy Sources (DNES) vide their grant No. 21/84/85/DNES/NARI is gratefully acknowledged.

Figure 1 - Schematic of Gasifier/Engine System.

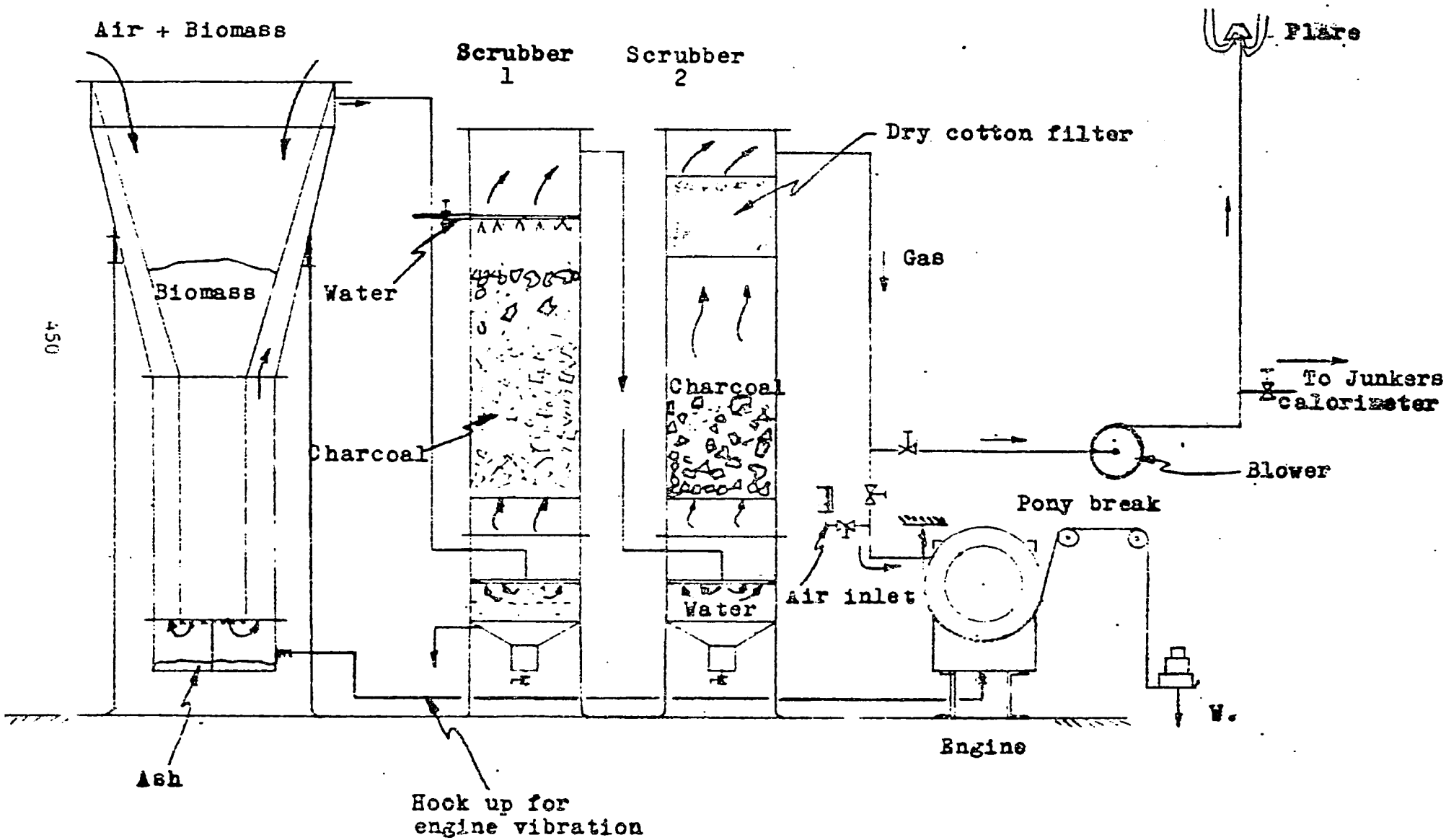

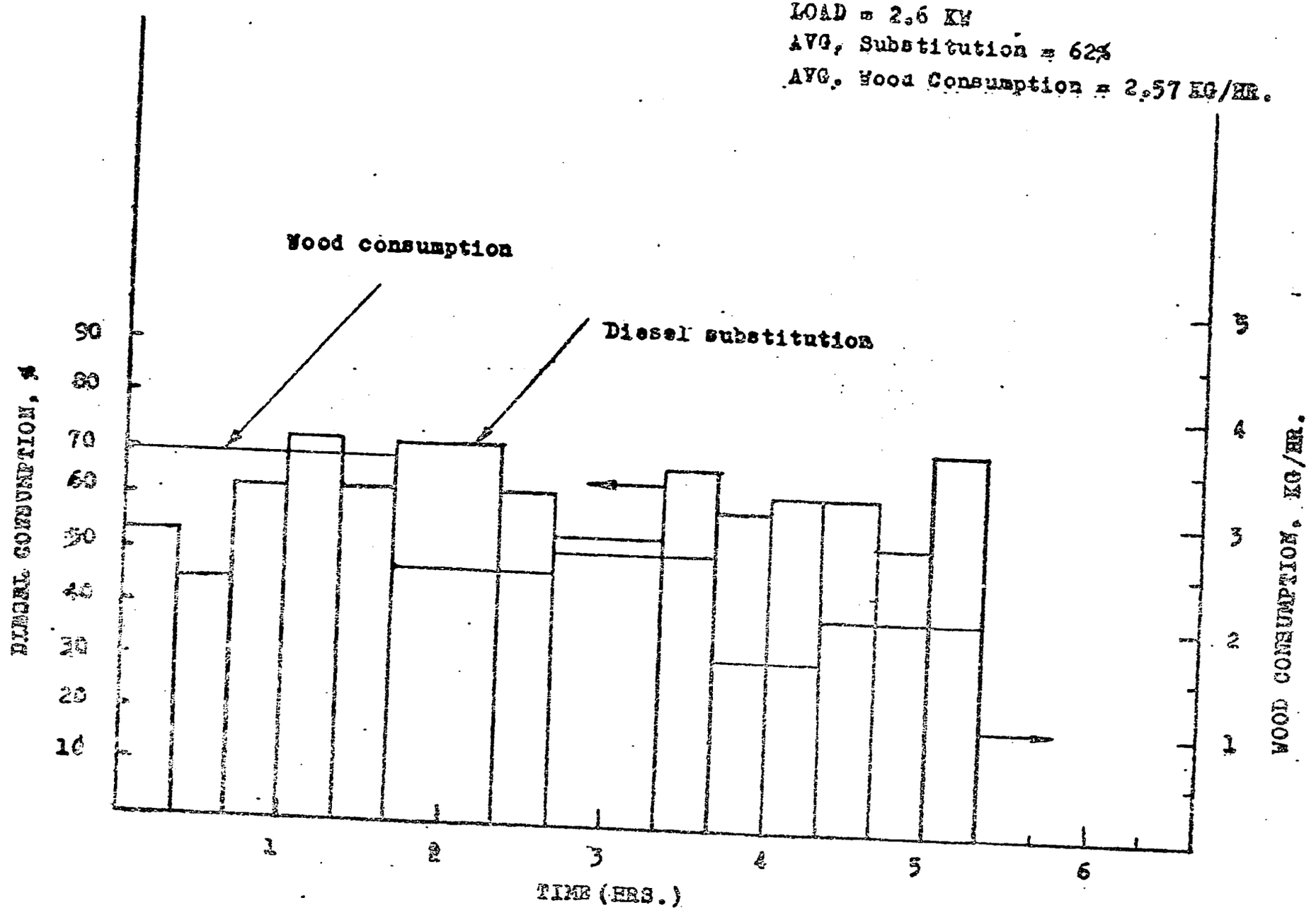

Figure 2 : Diesel substitution and wood consumption histogram.

EXPERIENCE WITH GASIFIERS FOR 3.7 kW ENGINES

S. Dasappa
Vikram Reddy
H.S. Mukunda
U. Shrinivasa

IISC
Bangalore, India

Experience With Gasifiers for 3.7-kW Engines

BY S. DASAPPA, VIKRAM REDDY, H. S. MUKUNDA AND U. SHRINIVASA

Energy technologies must of course vary from society to society. On the other hand, lessons learned from previous attempts, successful or otherwise, can be extremely helpful to a would-be innovator. The following article describes, in detail, how a new type of gasifier was developed in India. The discussion includes information on all stages, including various prototypes.

The renewal of interest in the development of biomass gasifiers and their use has been due to the sharp global reminders concerning the non-renewable nature of petroleum-based energy resources. Most of the important developments in the long history of gasifiers occurred before or during the second world war and these have been well documented (1). Gasifier designs for more than 15 kW (greater than 20 horsepower) have been presented in the Solar Energy Research Institute (SERI) translation of *Generator Gas—The Swedish Experience* (1). There are, however, no guidelines for designing for lower ratings, although a few hints about the problems of gasifier operation can be found (1, 2).

India has about six million pump sets using diesel engines of 3.7 kW capacity. It was recognized that running these pump sets with producer gas from a wood gasifier (in a dual fuel mode) could constitute a significant conservation measure for oil resources, and also make the user somewhat less dependent on a centralized supply of diesel. It is in this context that a project was undertaken in 1981 to develop a gasifier for the 3.7-kW diesel engine pump set.

In about a year a design using extrapolated values of parameters given in the SERI report was developed, and tests showed an average replacement of diesel of about 80 percent at full power (3). The gas produced by the gasifier and the cooler scrubber system was occasionally characterized by excessive levels of tar. The system required frequent operator attention and often had to be dismantled for maintenance. For ease of dismantling, some of the major junctions on the reactor shell were not welded, but were made leakproof using fire clay and plaster of Paris, which led to the development of cracks, eventually lowering performance. The operation became reliable only when this practice was abandoned completely and fully welded joints and water seals were used.

In the second phase of the project, initiated in 1983, the objective was to develop a prototype that would run reliably and yield good-quality gas while demanding very little attention. The literature (1, 3) continued to provide help in either confirming or discarding our suspicions and hopes of how each new concept would alter the performance of the reactor. As an illustration of this, we considered several earlier designs that have various provisions for proper drying and charring of wood chips inside the reactor. This concept has been adapted in the present design as a combination of a unique water seal and high-point gas offtake to obtain reliable operation.

During several runs when the gas quality was bad it was necessary to dismantle the system and examine various parts. This required almost half a day in the early prototypes, but the time was reduced to thirty minutes in the final version. In a field environment it would be a great help if the system could be dismantled and reassembled in about an hour, to reduce down-time.

During development, the suction from a blower was used to run the gasifier. Measurements were necessary to assess the performance of the system. Hence the flow rate, pressures and temperatures at several selected locations were continuously monitored. To determine gas quality, the commonly used Orsat apparatus was time consuming; therefore, the gas, when not being used in the engine, was flared in a burner in the diffusion-flame mode and the flame temperature was continuously measured and used as a direct indication of gas quality. When the gasifier was connected to the engine, the pump performance in terms of its rotational speed (rpm) and load (measured as the flow rate at known pumping head) was taken as a measure of the gas quality and was correlated with the measurement of composition at selected power levels.

Functionally, the reactor consists of a fuel container, air-intake arrangement, throat (hearth), reduction zone, grate and gas-offtake system. The gas passes through a cyclone, a cooler, and a fabric filter before going into the engine. In the earlier prototypes, there were no cyclones and only the coolers and filters were used. The cyclone was introduced for the first time in the fourth prototype.

THE FUEL CHAMBER

All reactors have a fuel chamber that stores wood chips deposited therein by gravity, as in the present case, or by gravity aided by vibration. The fuel container should be able to condense the moisture liberated from the wood chips and drain it out of the reactor.

The size of the container depends on the number of hours the gasifier is expected to run continuously and on the demand for wood chips, which is about 3.5 kilograms (kg) per hour for a 3.7-kW engine. Initially, a four to eight-hour supply was provided, which required 14 to 28 kg of fuel and a container of 0.04 to 0.08 m^3 volume. The first phase used a container volume of 0.14 m^3. The volume was lowered to 0.04 m^3 in Prototype I (Figure 1). It became 0.16 m^3 in Prototype II (Figure 2) because of the availability of 200-liter drums at extremely low prices. In Prototype III (Figure 3) the volume was higher at 0.2 m^3. The total weight of the different prototypes varied from 45 to 80 kg. These were considered very heavy for field operations and it was therefore decided that the weight had to be reduced substantially. The question

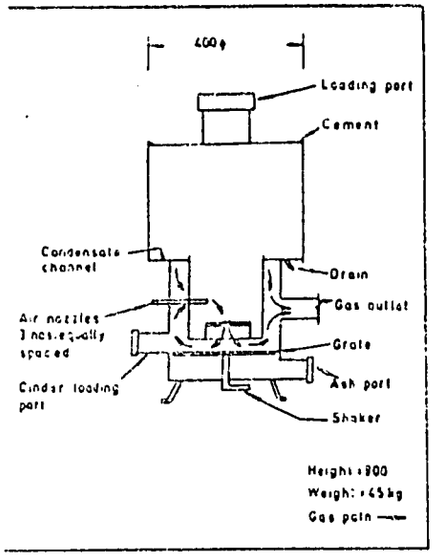

Figure 1. Prototype I (PI) (all dimensions are in mm).

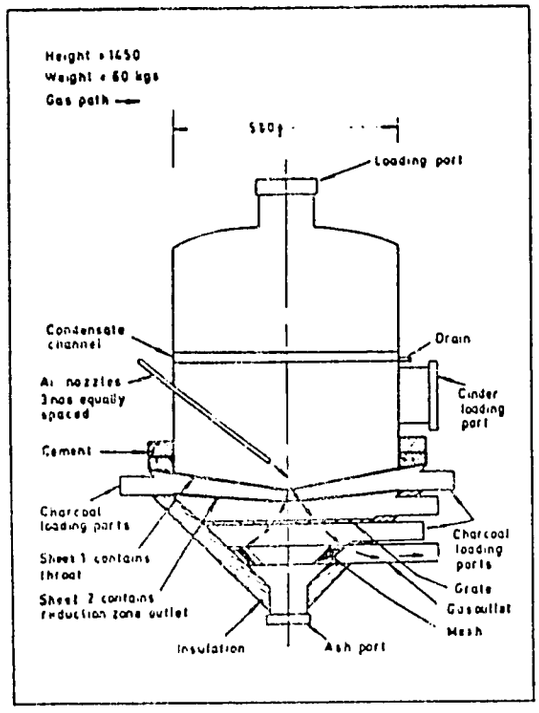

Figure 2. Prototype II (PII) (all dimensions are in mm).

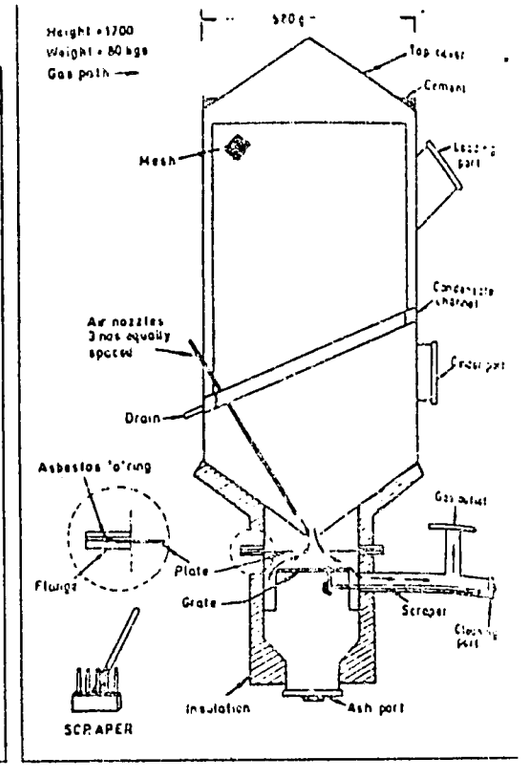

Figure 3. Prototype III (PIII) (all dimensions are in mm).

of the number of hours of continuous operation was reviewed, and it was found that, water in most wells in Karnataka could be pumped in two to three hours at a pumping rate of .01 m^3 per second. Consequently, it was decided to provide for a substantially lower volume. Prototype IV (Figure 4) has a volume of 0.04 m^3 with a diameter of 0.2 m and a height of about 1.0 m. The increased height allows for a better flow of wood chips.

Concerning the other requirement of removal of moisture from wood chips, in Prototype I, a drain was provided, and in Prototypes II and III, channels to drain condensed moisture were provided. In Prototype III, the scheme worked well for a while. However, during loading, wood chips fell into the channel and blocked it. This was prevented by using a mesh. Still, once every twenty hours of operation, the channel would get clogged with tar and cause excessive moisture in the gasifier and deterioration in performance.

In Prototype IV this problem was successfully overcome by a method that has not been used in any other design known to the authors. The arrangement consists of a water seal at the top of the container, the water being replenished once every an hour or so (Figure 5). The vapors, released from the wood chips as they approach the hot hearth zone, condense on the conical top (where the temperature does not exceed 55°C) and drain out of the reactor. Thus, even if relatively moist wood chips are used, they do not pose serious problems during operation.

Another feature new to Prototype IV is somewhat like the arrangement in the Imbert reactor design (1), in which hot gases are let out at a good height above the hearth. The outlet is above the air nozzles in the present design. Consequently, most of the wood chips in the container are exposed to the heat from the hot gases passing by in the outer shell, which enables effective drying of the chips. Conduction upwards along the walls permits a higher temperature zone, extending to the outer water channel, shown in Figure 4, where the shell is being cooled. Any condensation is possible only above the level of the channel. The complementary effects of providing a cool upper zone and a hot lower zone encourage rapid condensation to take place in the upper portion only, from which the condensate can easily be drained. This ensures satisfactory charring up to the air-nozzle entry levels, and the operation of the reactor becomes very reliable. Figure 6 summarizes the dimensions and the weights of the various prototypes developed.

LOADING OF WOOD CHIPS

Loading is done through the top cap in Prototypes I, II and IV, and through the side cap in Prototype III. To prevent wood chips from getting into the water channel, the top cap in Prototype IV is replaced by a hopper while loading. The entire loading operation in this last prototype does not take more than two minutes. During loading it is important to ensure that there are no stones, mud or other extraneous matter mixed with the wood chips. If these find their way downwards to the throat region, the reactor will produce noncombustible gas, but will have a good combustion zone near the throat, indicating blockage of the throat.

AIR INTAKE ARRANGEMENT

The air-inlet pipes were horizontally located in the early version but were introduced at an angle in the later prototypes to help visual examination of the combustion zone.

In the early versions the ratio of total air inlet-area to throat area was fixed at about 12 percent. According to the SERI report, good performance has been obtained for values ranging from three to 14 percent. Investigation of the pressure drop showed that the air-inlet line drop was about 20 mm wetgrams (w.g.) in a total drop of 90 mm w.g. It looked as though the drop across the air inlets was significant. It was decided to reduce the pressure drop across the air-inlet significantly by raising the air inlet-area by 50 percent. Instead of three air-inlet pipes of 8 mm inner diameter (ID), a similar number of pipes of 9.5 mm ID were used. This reduced the pressure drop to about half its original value because the drop varies as the square of the velocity. The velocity of the air entering the reactor is about 10 m/s in Prototype IV.

In Prototype IV the height location of the air-inlets is 56 mm and corresponds to a throat diameter of 35 mm. The air-inlet opening-circle diameter is 80 mm, or about twice the throat diameter.

THE REDUCTION ZONE

The reduction zone is immediately downstream from the throat and is critical to the successful performance of the reactor.

In Prototype I, the throat diameter was 40 mm based on the considerations of hearth loading. Later, the tests showed that better performance could be expected with a reduced throat diameter, particularly from the point of view of eliminating tar. Prototype I was run with both 40-mm and 35-mm diameter throats. Prototype II used a 35 mm throat. However, in Prototype III, experiments were conducted with throats of 35 mm and 30 mm diameters. One of the serious problems faced in prototypes up to III was the presence of semi-charred wood pieces in the reduction zone, sometimes in spite of care taken to initially load the charcoal up to and well over the air nozzles. This in part accounted for the tar seen in the gas stream. It was inferred

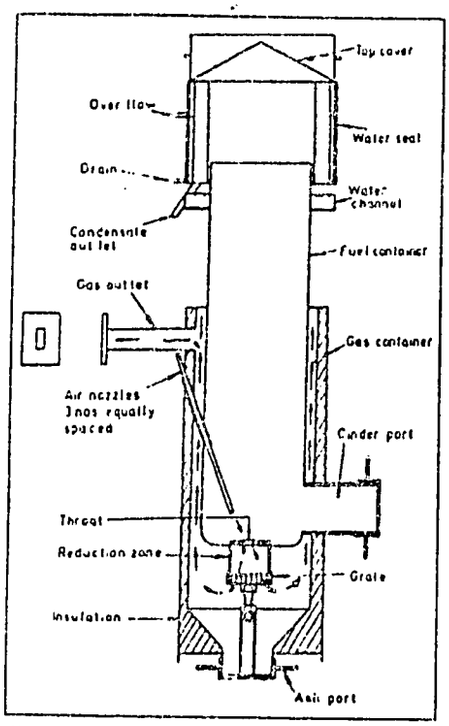

Figure 4. Prototype IV (PIV) (all dimensions are in mm).

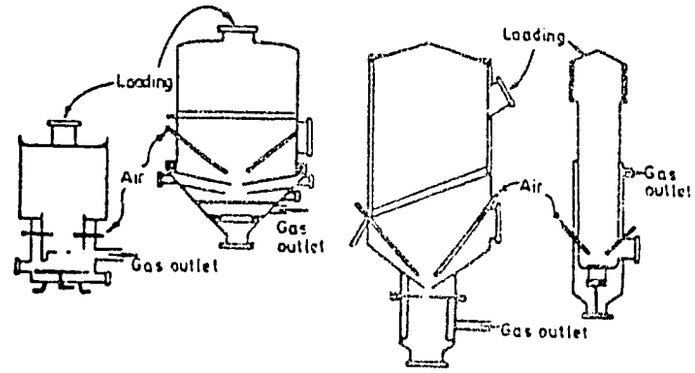

	P I	P II	P III	P IV
Max. diameter, mm	400	580	580	235
Overall height, mm	1000 (1700)	1600	1700	1200
Weight, kg	40 (50)	60	80	35

Figure 6. The schematic of various systems, their dimensions and weights. Figures in brackets are for original version of PI before height reduction.

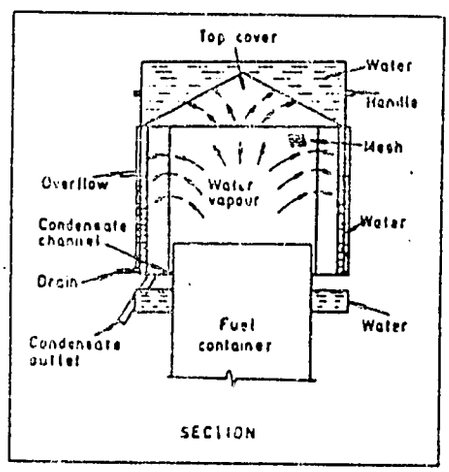

Figure 5. The water seal.

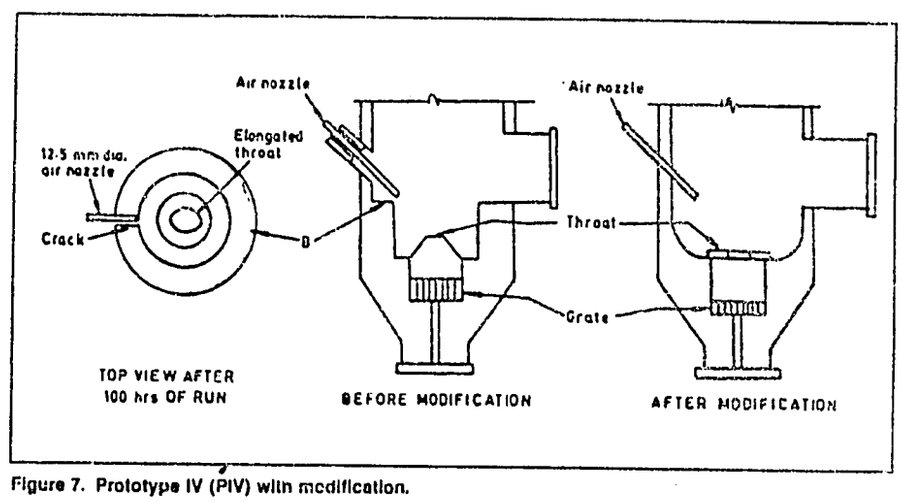

Figure 7. Prototype IV (PIV) with modification.

that some pieces of wood passed through the combustion zone before getting fully charred. This could also account for the occasional bad runs as the reduction zone becomes ineffective. Such problems have been overcome in Prototype IV, where the hot gases from the reactor are allowed to dry and char the wood pieces. Experimental runs with Prototype IV have had excellent results—no tar and only some fine dust with throats of diameters 30, 35 and 40 mm—whereas Prototype III showed good results only for a 30-mm throat. The inference that can be drawn is that if the chips are properly charred before entering the combustion zone, the performance is less sensitive to throat dimensions below 40 mm. The reduction zone volume of the first prototype was 320 cm^3 and that of the others about 250 cm^3. The residence time computed on the basis of the reduction-zone volume/volumetric flow rate works out to about 25 milliseconds in the first three prototypes and about 20 milliseconds for the fourth.

In the fourth prototype, it was found that after about 100 hours of operation the throat made of AISI-304 stainless steel had enlarged from 30-mm diameter to an elongated hole of 40-mm. At location (B) in Figure 7, there were also cracks close to the air-entry point. It was inferred that the proximity of the air nozzles must have caused high temperatures, resulting in high local thermal stresses leading to the cracks. The enormous increase in the area of the throat and its elongated shape were due also to the different sizes of the air-inlets used in those tests, i.e., one nozzle of 12.5-mm ID and two of 8-mm ID. Moreover, the presence of the char close to the metal surface at temperatures above 1,200°C might have caused diffusion of carbon into the metal, lowering its melting point. Therefore, the design was altered to that shown in Figure 7, which reduced the number of welds required. The stainless steel throat plate is simply located over the hearth, which facilitates easy replacement. Ash is expected to get deposited around the region and help in sealing against leakage. Details pertaining to the four prototypes are summarized in the Table.

GRATE AND ASH-REMOVAL SYSTEM

Several attempts were made to improve the ash-removal system. In the prototypes up to Prototype III, grates were made of cast iron with a spacing of about five mm between grate bars. In Prototypes I and II, vibrating the grate, using engine excitation, helped to move the ash downwards. In Prototype III, experiments showed that a semicharred mass was more prevalent in the reduction zone when vibration was used. Both in Prototypes I and II, the ash was sometimes found lumped together with a tar-like substance downstream from the throat. In Prototype III, a claw-like device was used to clean out the lumps of ash and allow the reduction zone to be replenished with fresh charcoal. In fact, it was very effective in ensuring that the system functioned normally whenever minor problems of gas quality arose.

Table. The hearth parameters (*figures in brackets indicate changes made).

SERI Reference No.		Prototypes I	II	III	IV	SERI Recommendation
1.	d_n-throat diameter, mm	40(35)	35	35(30) (40)	30(35)	60 (lowest)
2.	d_a-air nozzle opening circle diameter, mm	110	96	96	100	
3.	d_r-reduction zone outlet diameter, mm	100	88	88	75	
4.	h-air nozzle opening circle height above throat, mm	64	56	56	56	
5.	h_1-reduction zone opening height below throat, mm	40	40	40	30	
6.	h_2-grate height below reduction zone opening, mm	40	40	40	60	
7.	air nozzle diameter mm	7	7	7(7,12.5)	9.5	
8.	no. of air nozzles	3	3	3(2,1)	3	
9.	(area of air nozzles 100/area of throat)	9.2(12)	12.0	12.0 (28.3)	30.0 (17.0)	3–10
10.	reduction zone volume cm^3	320	245	245 (237)	250 (257)	
11.	nominal gas flow rate m^3/sec	.004	.004	.004 (.003)	.003	
12.	B_n-ratio of nominal flow rate to smallest passage area Nm^3/cm^2	1.1	1.5	1.5 (1.5)	1.5 (1.9)	0.4–0.9
13.	t-residence time, milliseconds	24	19	19 (24)	21 (21)	500

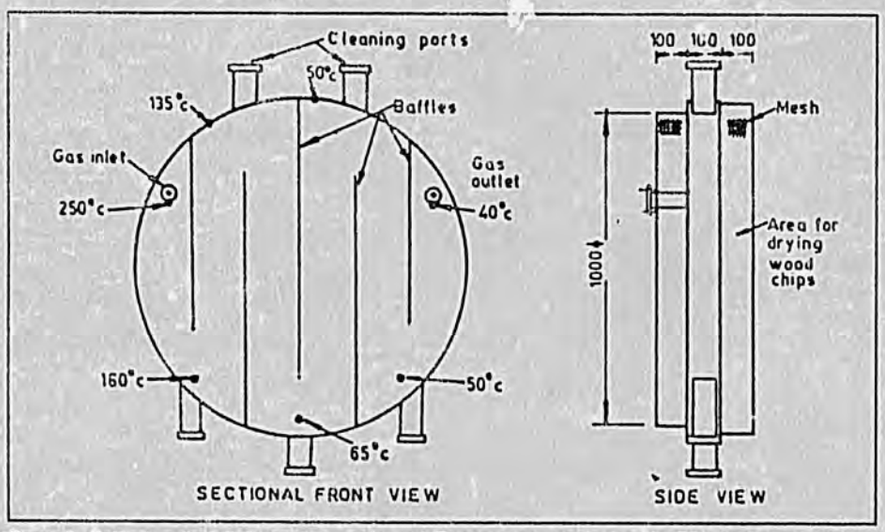

Figure 8. Baffled cooler (all dimensions are in mm). Temperatures marked are for PIV steady operating conditions.

In Prototype IV, the design of the grate was completely changed and the cleaning device was no longer necessary. The grate was introduced from the bottom screw cap and, at the end of each run, it was unscrewed to remove the ash and charcoal fines. This way the gases follow a radial exit through the grate and then move upwards. Because the velocities in the annular space are lower than one m/s, most of the particles larger than 100 μm do not get carried by the gas and are retained in the reactor itself, the process being facilitated by the sudden upward turn in the gas path.

THE CYCLONE

The cyclone has been designed following standard practices (4). Its inlet velocity at the nominal flow is 15 m/s and the dust collection efficiency is estimated to exceed 95 percent at nominal flow. The cyclone inlet temperature is about 400 to 450°C and the exit temperature 250°C. The cyclone collects about 6 g/hr of dust on the average.

THE COOLER

The cooler, a new design developed after earlier efforts, is a baffle-type heat exchanger with inside velocities not exceeding 0.3 m/s; the temperatures at different baffle-entry points are shown on Figure 8. As can be noticed, the largest drop in temperature occurs in the first two passes and this amounts to as much as 150°C. The subsequent drop of less than 40°C requires the next four passes. The thickness of the sheet is 4.6 mm.

The newest version of the cooler (Figure 9) is based on a 0.8-mm stainless sheet and is yet to be tested. The use of the thin sheet and the expected higher velocities (three times the previous value) are expected to provide better heat transfer and therefore a good cooling effect. The use of a water seal improves heat transfer through water vaporization, and simplifies the construction and cleaning of the system.

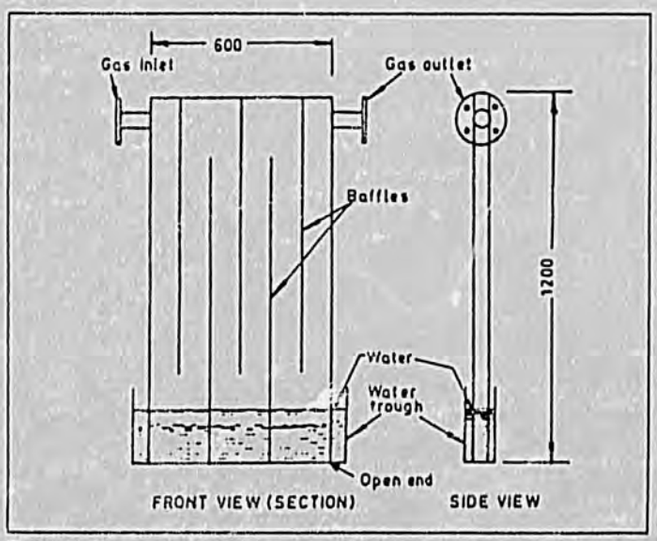

Figure 9. The new cooler with water seal (all dimensions are in mm).

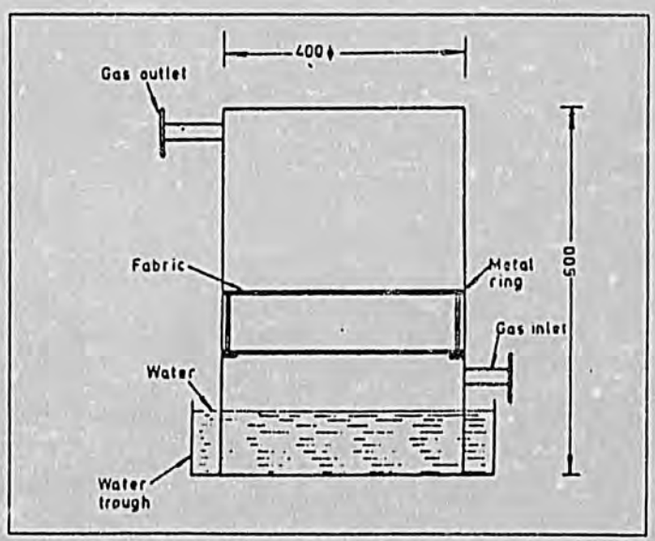

Figure 10. Fabric filter (all dimensions are in mm).

FABRIC FILTER

Recommendations on fine dust-cleaning systems (5) seem to indicate that a fabric filter (Figure 10) is essential for fine dust (of less than 5 μm). Velocities should be low at the filter (.03 to .05 cm/s), which requires a large cross-sectional area. This requirement could be combined with another one for a large volume to act as an acoustic isolator between the engine and the gasifier. Hence, a cylindrical vessel of 0.07 m^3 capacity has been fitted with two layers of fabric filter material. The gas passing through this system should be almost dust free; the system is yet to be fabricated and tested.

OPERATION OF THE REACTOR

In all the prototypes, the reactors were filled with charcoal up to a little above the air-entry points, with slightly smaller pieces for the reduction zone. The lighting processes, however, were different for the four prototypes. In systems I to III, specially prepared cinders were loaded near the hearth, either from the bottom or from the top, and air was either blown in or drawn out depending on the location. In some tests wood was loaded immediately after the cinders and, in others, after the reduction zone became sufficiently hot. In the latter situation, a few explosions were experienced, particularly with Prototype III immediately after closing the cap. However, when wood was loaded along with charcoal there were no problems.

However, the most recent starting scheme consists of loading the charcoal first and then the wood chips, applying suction to the system by using an electric blower, and holding a burning kerosene wick near the air-inlet nozzles for no more than 30 seconds.

When Prototype IV is running under steady conditions for a nominal flow rate of 3.2 g/s, the various system parameters are as given below (with deviations referring to fluctuations during the run).

Temperature:	
Combustion zone	1,300–1,400°C
Throat temperature	1,000–1,200°C
Reduction zone	900–1,000°C
Gas outlet	550–600°C
Cyclone outlet	250–600°C
Cooler outlet	<45°C
Pressure drop:	
Total system	75 ± 10 mm (w.g.)
Across the reactor	55 ± 10 mm (w.g.)
Across the cooler	12 ± 5 mm (w.g.)
Across the cyclone	6 ± 2 mm (w.g.)
Across air inlet	20 ± 5 mm (w.g.)
Gas flow rate	3.2 ± .2/s

An estimate of the pressure drop across the cyclone by Strauss (5) roughly matches what is observed—8.0 mm w.g. for nominal conditions. The pressure drop across the cooler was estimated at 0.10 mm w.g., whereas the measured value is 12 mm w.g. The discrepancy may be due to the continuous resistance that occurs when the hot fine pieces of cinders move down the system in jerks. A maximum total pressure drop across the air inlet of about 85 mm w.g. seems reasonable. The total pressure drop should be less than 100 mm w.g. (including the drop across the fabric filter) to match the engine suction capabilities.

Implementation of these concepts produced a prototype that is reliable and operates smoothly. The problem of the throat blockage due to inadvertently introduced matter like stones and clay into the system remains. However, this can be avoided when loading the wood. Measurements for tar and dust showed that the amount of tar, if any, is much below detection limits (<10 ppm) and the dust is about 6 g/hr for prototype IV. On Prototypes I and II, the tar was of the order of 1,000 ppm, and dust was not as significant as it was in Prototype III.

EXPERIENCE WITH ENGINE RUNS

While tests with Prototype I and earlier designs were conducted using a diesel-engine pump set, the tests with Prototypes II–IV have used a gasoline/kerosene-engine pump set. For about the same cost as a diesel engine pump set, one can buy a gasoline/kerosene-engine pump set that can be run entirely on gas, though the power output would be reduced by about 35 to 40 percent. Except for ignition, which requires gasoline, one does not need petroleum to run the system. Thus, even if the power output is reduced, the dependence on petroleum fuels will be minimal.

The engine used was a Villiers 4-stroke, 3.7-kW engine of 250 cm^3 displacement at a rated speed of 3,250 reverberations per minute (rpm). The engine starts on gasoline and runs on kerosene. The average fuel consumption is about one kg/hr. If the governor mechanism is disengaged the engine speed can be increased to 4,100 rpm.

The gas line has a side branch with a gate valve to allow air to be mixed with the fuel. The normal stoichiometric composition of the fuel and air is equal amounts by volume. The mixture is directly sent to the air inlet of the carburetor.

There were difficulties experienced during the engine switch to gas. They were traced to impedence matching between the engine and the fuel lines; a large volume capacitance was added upstream of the inlet to the engine, which resulted in smooth switchovers. In some experiments the container acting as a capacitance device was filled with metal turnings, and in others with organic fibers that filtered the fine dust. They were not very effective, however, and the reduction in volume caused engine-speed variations. In the event of a shut-down the pressure waves would clog the air inlets with tar and the machine would require cleaning before restarting.

When the entire system was cleaned and started anew, the engine was observed to run smoothly for hours on end without any problems; but starting with unclean elements sometimes resulted in lower performance. At optimum operating conditions the engine reached 2,800 rpm. At average operating conditions the speed fluctuated between 2,600 and 2,700 rpm. At a mean of 2,650 rpm, the power output corresponded to $(2.650/3.250)^3 \times 100 = 54$ percent of the rated power on gasoline/kerosene. Under these conditions, the water pumping rate was .008 m^3/s (28.8 m^3/hr) at a head of 10 m of water (0.1 hp).

In order to improve the system performance, the pump was uncoupled from the engine and reconnected, using a pulley-belt drive. The pulley ratio was so adjusted that the engine could be run at speeds higher than previously. One started with no load on the engine, i.e., no flow of water, and increased the load slowly, which resulted in the engine demanding a higher flow of gas input. The performance of the gasifier usually became better with larger flow rates. The ratio of the speeds of the engine and the pump was set at 1.25 and 1.3 in two different trials. The engine ran at 3,300–3,400 rpm and the pump at 2,700–2,800 rpm, corresponding to a power output of 62 percent of the rated power. To produce wood chips from logs a cutter was attached to a second shaft so that one could transfer the load from the pump to the cutter when required. Trials with the cutting device were successful, but more experiments are necessary to decide on its usefulness.

CONCLUSION

A description of the morphology of the four prototypes in various stages of development has been presented. It is claimed that the final version meets most requirements, and experimental data supports this claim. Two features—a top cap using a water seal and a high gas off-take point—help to obtain good reactor performance. The next task is to test the system in a field environment and examine its potential for satisfactory operation.

References and Notes

1. SERI, *Generator Gas—The Swedish Experience from 1939–1945* (Solar Energy Research Institute, Colorado, NTIS/SP-33-140, 1979).
2. A. Kaupp and J. R. Goss, *State of the Art of Small-Scale Gasifiers* (Agency for International Development, Washington, D.C., 1984).
3. U. Shrinivasa and H. S. Mukunda, *Wood Gas Generators for Small Power (5hp) Requirements*, Sadhana, part 2, 137–154 (1984).
4. H. J. Perry, *Chemical Engineer's Handbook, IV Edition* (McGraw-Hill Co., 1963).
5. W. Strauss, *Industrial Gas Cleaning* (Pergamon Press, London, 248–314, 1975).

6. The results presented here are the outcome of a project on wood gas generators for engines of less than 10 hp financed and administered by the Karnataka State Council for Science and Technology, Indian Institute of Science, Bangalore. The authors are grateful for the support provided.

S. Dasappa, Vikram Reddy, H. S. Mukunda and U. Shrinivasa can be reached at the Department of Aerospace Engineering, Indian Institute of Science, Bangalore 560 012, India.

GASIFICATION OF PULP AND PAPER MILL WASTE TO REPLACE FOSSIL FUEL IN LIME KILN

Harish Dak

Research Engineer
Thapar Corporate Research & Development Center
Patiala, India

GASIFICATION OF PULP & PAPER MILLS WASTE TO REPLACE FOSSIL FUEL IN LIME KILN

Harish Dak
Research Engineer
Thapar Corporate Research & Development Centre
PATIALA 147 001 (INDIA)

INTRODUCTION

Air gasification of biomass is a thermochemical biomass conversion process which converts a biomass material such as wood chips into a low calorific content gas that can be either fed into an internal combustion engine or burnt for process heat. The thermodynamic conversion of wood into a producer gas has been reported to have a theoretical efficiency of 85 percent (1).

The practical experience of wood and charcoal gasifiers used in vehicles was very well developed during the second world war. This practical experience is being learnt once again to prepare for potential applications in developing countries, and in addition researchers are attempting to understand the details of the gasification process. The implementation of gasifiers today is small, and in Brasil and the Philippine where activities are the greatest (1) the operating gasifier systems under only in the several hundreds, a figure quite far from the one million gasifiers actually used in world war II.

The reason for lack of implementation of biomass gasification systems is one of low availability of wood, another reason is the lack of technology to gasify non-wood biomass, and still another reason is the availability of other petroleum fuels. Thus the prospects of widespread use of biomass as an energy source is uncertain unless non-wood biomass can be gasified at low cost.

In Ballarpur Industries Ltd. (Unit Shree Gopal) indicates that significant amount of pulp & paper mills waste are available for efficient utilization. The equivalent of such residues have been calculated to be well greater than the energy used in lime kiln, in the form of coal. (Appendix I) published reports on utilization of biomass residues gasification presents a few prototype design. However, unlike charcoal gasification which is recognized as being able to produce a tar free gas, crop residue gasifiers that can be certified to produce high quality gas have yet to be developed.

The gasification of pulp & paper mills waste which are very heterogeneous will require some understanding of the gasification process occuring in the various reactors. It is the object of this communication to present the results of a set of tests of gasification of wood & bark downdraft batch gasifier. The author believes that understanding of the principle of such a unit may lead to designs of cheap energy systems for the replacement of coal being used in lime kiln.

2. THE GASIFICATION UNIT

The gasification system set up at Thapar Corporate Research & Development Centre, Patiala consists of :

i) Gasifier,
ii) Cooler & Filtering Box,
iii) Blower & Hair, and
iv) Control Equipment

2.1 Gasifier

Biomass gasification equipment may be divided into downdraft type, fluidized bed type, suspension type, crossdraft type and updraft type. Among gasification systems that are of interest today the downdraft type and the fluidized bed type have been the subject of great interest.

Co-current moving bed gasifiers as shown in Fig. (1) have been selected for the gasification of biomass

because of following main advantages:

- the reactor is simple to operate and control
- a tar-free fuel gas is produced that can be utilised for power and/or heat generation

Gasification is a complex process: the solid fuel successively dries, pyrolyses and reacts with O_2, CO_2 and H_2O as given below in a simplified form:

$$C + CO_2 = CO_2$$
$$C + CO_2 = 2\ CO$$
$$C + H_2O = CO + H_2$$
$$CO + H_2O = CO_2 + H_2$$

In the gasifier Fig. (1) the process steps are found in different zones. Usually the zones are overlapping each other. The solid feedstock is introduced at the top of the gasifier and flows downwards, due to conversion of char and removal of ash. Drying and pyrolysis take place due to heat transfer from the oxidation zone close to the air inlet. In the oxidation zone the reactions with oxygen result in a sharp rise in temperature upto ca. 1700 K. Apart from the generation of heat, an important function of this zone is to convert all condensable organic products (tar) from the pyrolysis zone. In a proper designed gasifier the products of the oxidation zone are charcoal and a hot gas rich in CO_2 and H_2O, not containing any tar. In the reduction zone the sensible heat of the hot char and gases are absorbed in the endothermic reactions of CO_2 and H_2O with the carbon. Consequently a gas containing N_2, H_2, CO, CO_2, H_2O and some CH_4 is produced.

The present gasifier, as shown in Fig. (2) has been designed to utilise various types of feed stocks, available at BILT with varying in particle size, moisture and ash content. This gasifier was designed on the annuular throat concept given by Groeneveld (3). Before designing this gasifier, pyrolysis experiments, in thermobalance were also carried out. A typical curve

for wood dust is presented in Fig.(3&4). The salient features of present system are also presented in Table .

2.2 Cooler & Filter Box

Though, the present aim of this project is not to use fuel gas for I.C. engines but cooler & filter box was incorporated into system, so that as and when situation arises, this system may be coupled with I.C. engines. The cooler & cleaner incorporated in the system was wet cyclone type .

2.3 Blower & Flair

A one H.P. blower was incorporated in between cooler & Hair, to provide induced draft through gasifier and fuel gas at some pressure. No serious attempts have been made to design Flair, presently incorporated into system. However, designing of suitable burners for lime kiln are in progress.

2.4 Control Systems

In Pilot Plant Unit, various control units have been provided for automatic operations. Except automatic feeding of biomass, all other functions like, rotating of grate, water flow control, hair, blower running, etc., were automatically controlled. The audio and visual indicators were also incorporated in systems.

3. RESULTS & DISCUSSION

The biomass waste generated by paper mill was analyzed and the results are presented in Table 2 . Results indicates that some of the feed materials are high ash content. Sludge taken for analysis purpose was air dried sample.

For the present results, the wood chips and bark were used for experimental results. The system was tested continuously for approximate 75 hours for wood chips and 60 hours for bark. The typical results obtained are presented in Table 1 .

The fuel consumption for the 100 m^3/hr gas out put was approximate 40 - 44 kg of wood chips and 50 kg of bark. It was also observed that flame was sustained on Flair after 5 - 6 minutes of starting of system and also sustained continuously for 7½ hours (this was the longest period of testing). The calorific values & composition of gases were also more or less constant during this period, Fig.5 .

For smooth and efficient operation of gasifier, rotating grate was started for one minue after every 20 minutes in case of wood and 15 minutes in case of bark. During experiments, no clinckers or wear & tear were observed in the system.

Estimation of tar was also made before cooling and after cooling. The tar obtained from present gasifier (after modified initial one) was approximately .2gm/Nm^3 in wood chips and .3gm/Nm^3 with bark. The tar after cooling was more or less negligible. However, gasifier which was initially designed were producing approximate 1gm/Nm^3 with wood chips and 1.8 gm/Nm^3 of gas with bark. To determine the cause, thermocouples were introduced at various places in combustion zone and pyrolysis zone. Temperatures at various points were measured and temperature profile were drawn. We observed from temperature profile, that at some points in combustion zone temperatures were not uniform. To make uniformity in temperatures nozzles were redisigned & relocated. One additional pipe in centre was also introduced from top. The central pipe also contains four holes at bottom. After introducing redesigned and new nozzle the tar content in gas dropped drastically because of even distribution of temperature in combustion zone. The total calorific value of gas also incorporated with new configuration.

The gasifier was designed for 100 m^3/hr gas but it was also operated at various flow rates. The efficiency and performance remained more or less constantin the range of approximate 40 - 120 m^3/hr gas out put.

4. FUTURE PLANNING

4.1 With regard to the good experimental results obtained from wood chips & bark, the next step is to undertake long test runs to get an idea of the possible increase of maintenance etc.

4.2 Utilization of other feed material

4.2.1 One or two runs have been taken on wood dust & bamboo dust only. The performance were satisfactory but it need more intensive research.

4.2.2 For the efficient utilization of sludge and dust, we have designed fludized bed gasifier (as mentioned in Fig. 5) on the basis of information available, provided in literature.(4,5)

The fluid bed gasifier was designed for air dried sludge. An other design programme is also in progress to use wet sludge.

4.2.3 Fabrication testing of updraft gasifier : We believe that high moisture content feed could be effectively utilized in updraft gasifier. In this case the sensible heat will be used dry sludge in the same reactor.

4.2.4 It is expected that sludge wood dust/husk may need force feeding system. Hence force feeding system would be provided in updraft and/or downdraft system.

LITERATURE CITED

1. Vaing G., Delille V. Conception, Realisation et Essais d'un Prototype de Tracteur a Gasogene de petite pussance destine aux Pays tropicaux. Machinisme Agricole Tropical, no.81, Jan - Mar 1983. p.3-43 (In French).

2. Foley G., Barnard G., Timberlake C. Gasifiers: Fuel for Siege Economies, An Earthscan Paperback, 1983.

3. M. J. Groenveld:"Production of a tar free gas in an annular Co-current moving bed gasifier". P.249. Producer gas 1982. Published by the Beizer Inst.

4. Biomass gasification in Thiland PP 219-260. Report submitted to the National Energy Admn., Min. of Sci. & Tech. & Energy, Royal Thai Govt.

5. K. Maniatis and A. G. Buckens. An emperical mode for the Design of Fluidised bed Gasifier for Biomass. ed. A. V. Briggwater, Butterworth publications.

Table 1. Salient Feature of Gasifier

(1)	Type	current induced draft
(2)	Gasification agent	Air
(3)	No. of air nozzles	Four peripherial and one in Centre
(4)	Throat diameter	75 mm
(5)	Form Ash discharge	Solid through rotating grate
(6)	Maximum gas generation capacity	100 m^3/hr
(7)	Minimum gas generation capacity	30 m^3/hr
(8)	Outlet of gas temperature	300 ^oC
(9)	Calorific value	1000-1050 K Cal/NM^3
(10)	Composition of gas	
	CO	16 - 18%
	H_2	17 - 20%
	CH_4	0.3 - 0.5%
	N_2	45 - 50%
	O_2	0.3 - 0.5%
	CO_2	8 - 10%
(11)	Flame temperature (open)	830 ^oC
(12)	Efficiency	Approx. 75%

Table 2. Some Physical Properties and Analysis of Pulp and Paper Mills Waste and Agriculture Residue

		Hard wood Bark	Bark of euce-lypus	Mis saw dust	Effluent sludge	Wheat straw	Bagasse
1.	Moisture content (%)	9.65	11.95	12.20%	9	10	8-10
2.	Ash %	9%	4.37	2.8%	36.8	8.3	5.0
3.	Ash fusion temp. °C	1200	1200	1200	900-1200	1200	900-1050
4.	Kalorific value k.cal/kg.	3586	3570	3900	2020	3200	3800
5.	Density kg/m^3	~135	121	240	-	146	134
6.	Volatile Meter (%)	68.1	67.3	77.33	42.3	73.6	792
7.	Fired carbon (%)	23	28.2	20.1	20.1	18	15.9

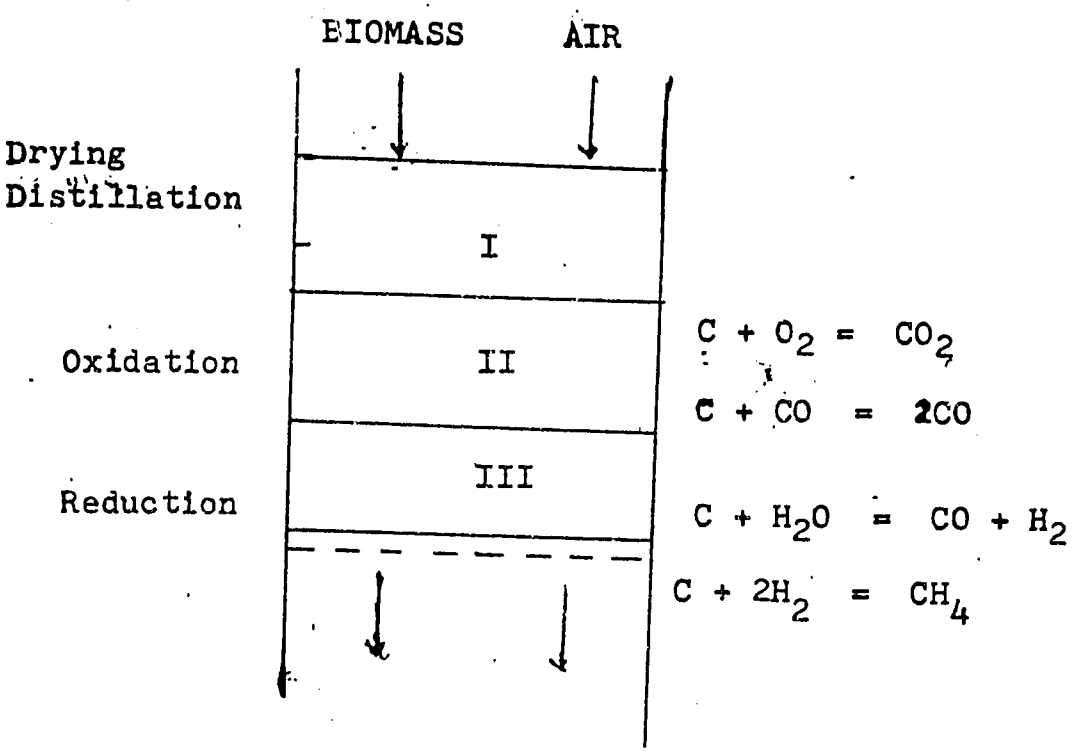

Fig. 1 Reaction zones in a down draft gasifier

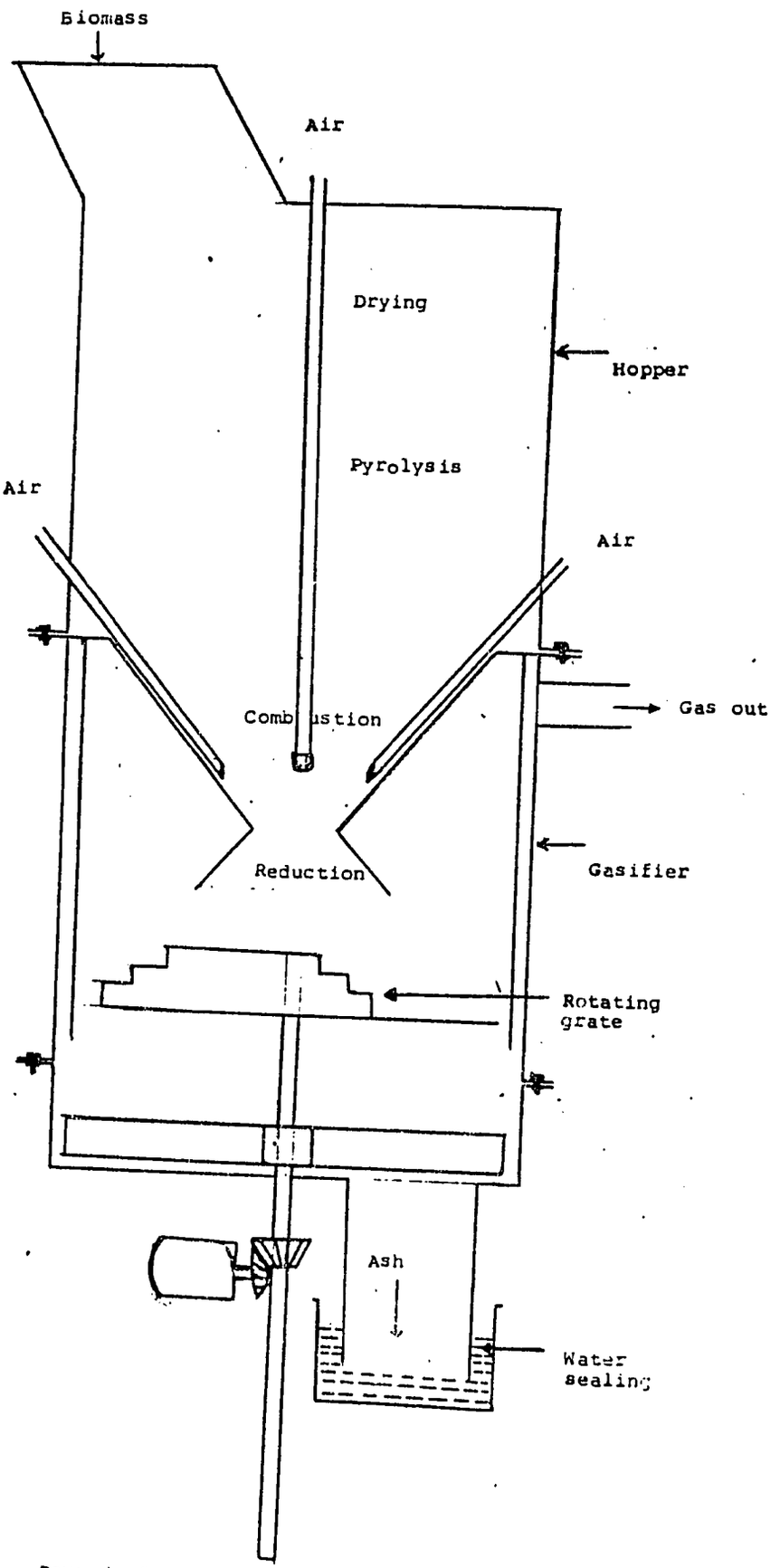

Fig.2 Down draft rotating grate type gasifier under testing

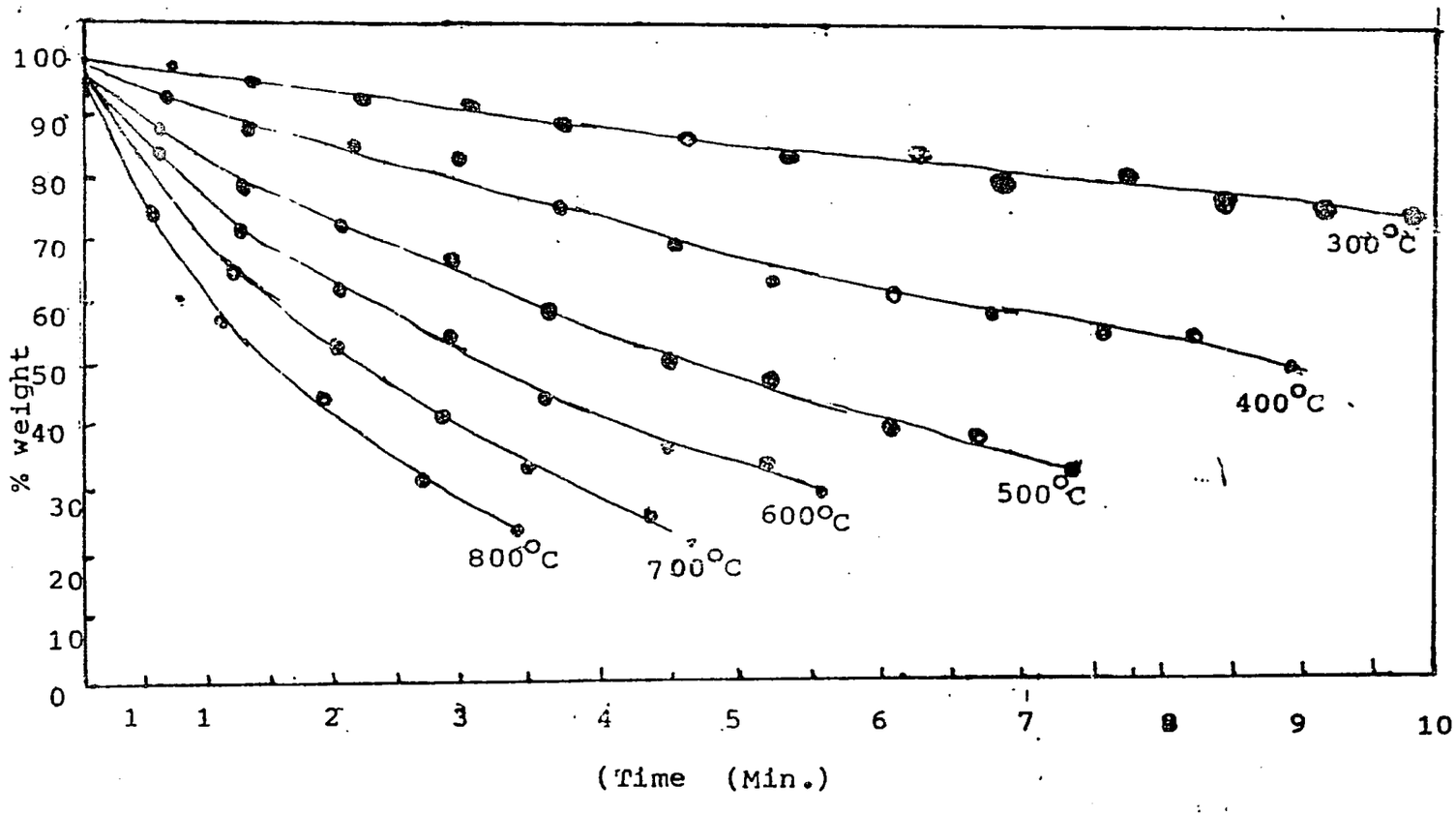

Fig. 3 Weight loss w.r.t. time of various temperatures. Pyrolysis of bark.

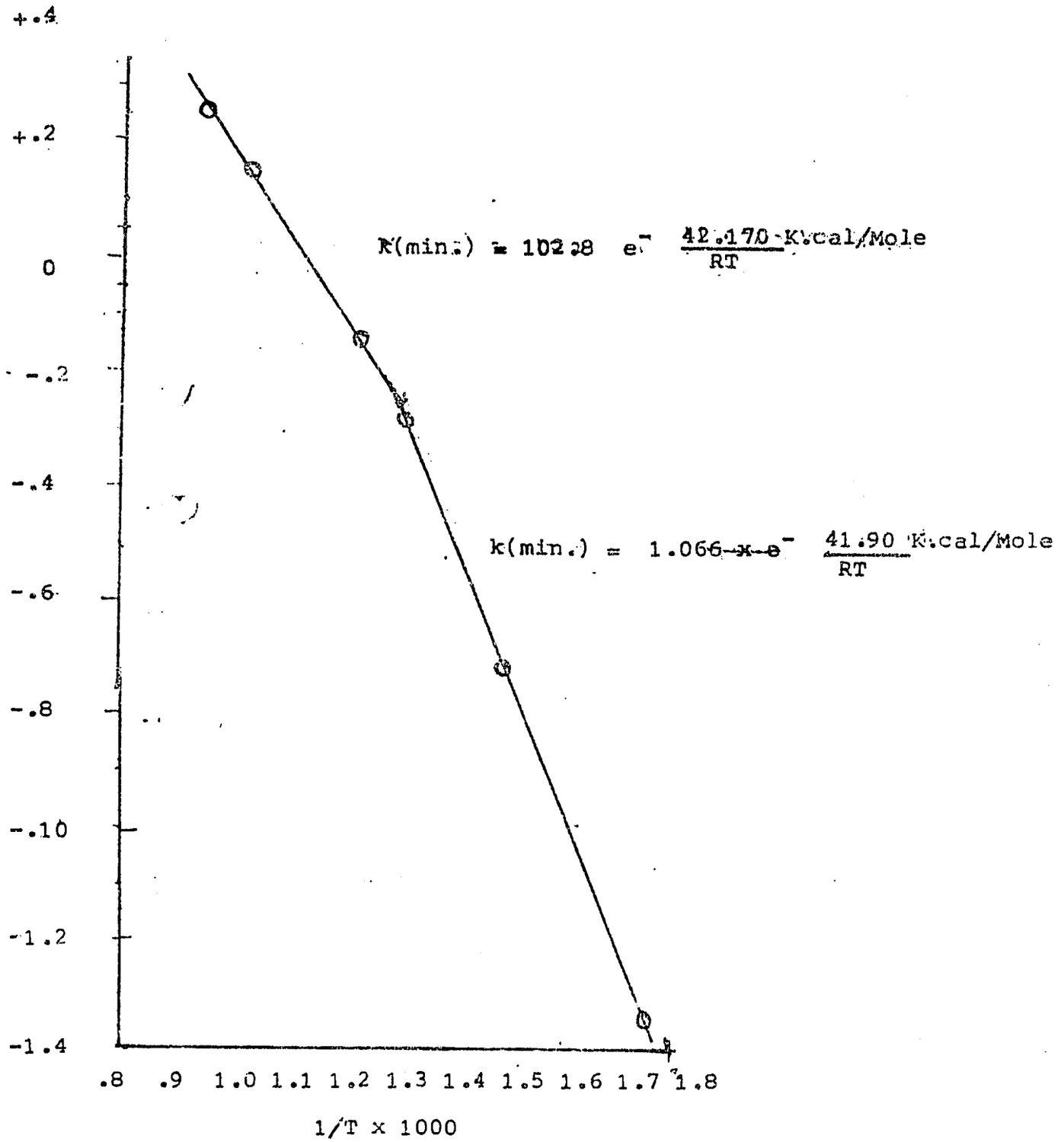

Fig. 4 Arhenious plot for pyrolysis of bark.

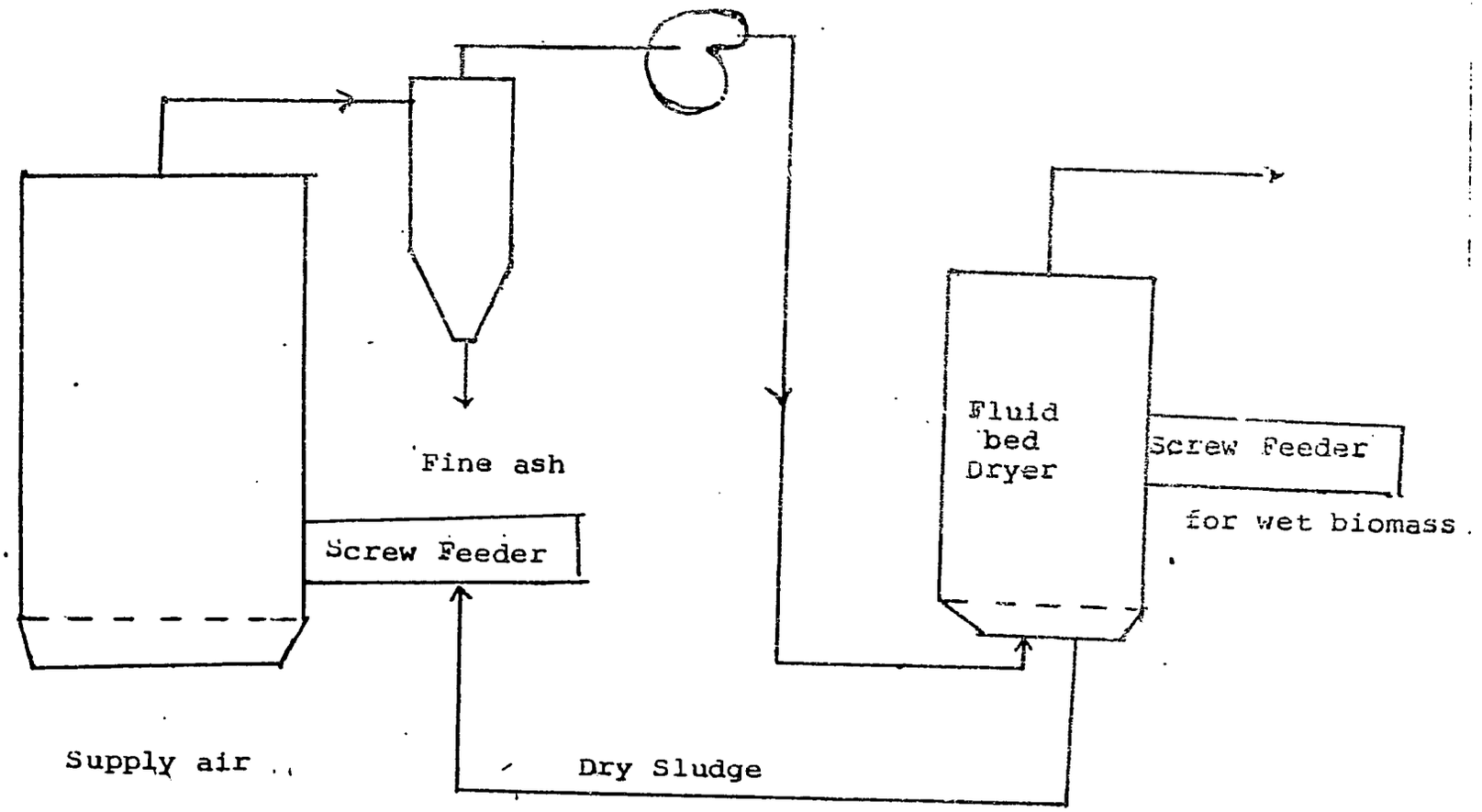

Fig. 5 : Schematics of proposed fluid bed gasification-cum-dryer system.

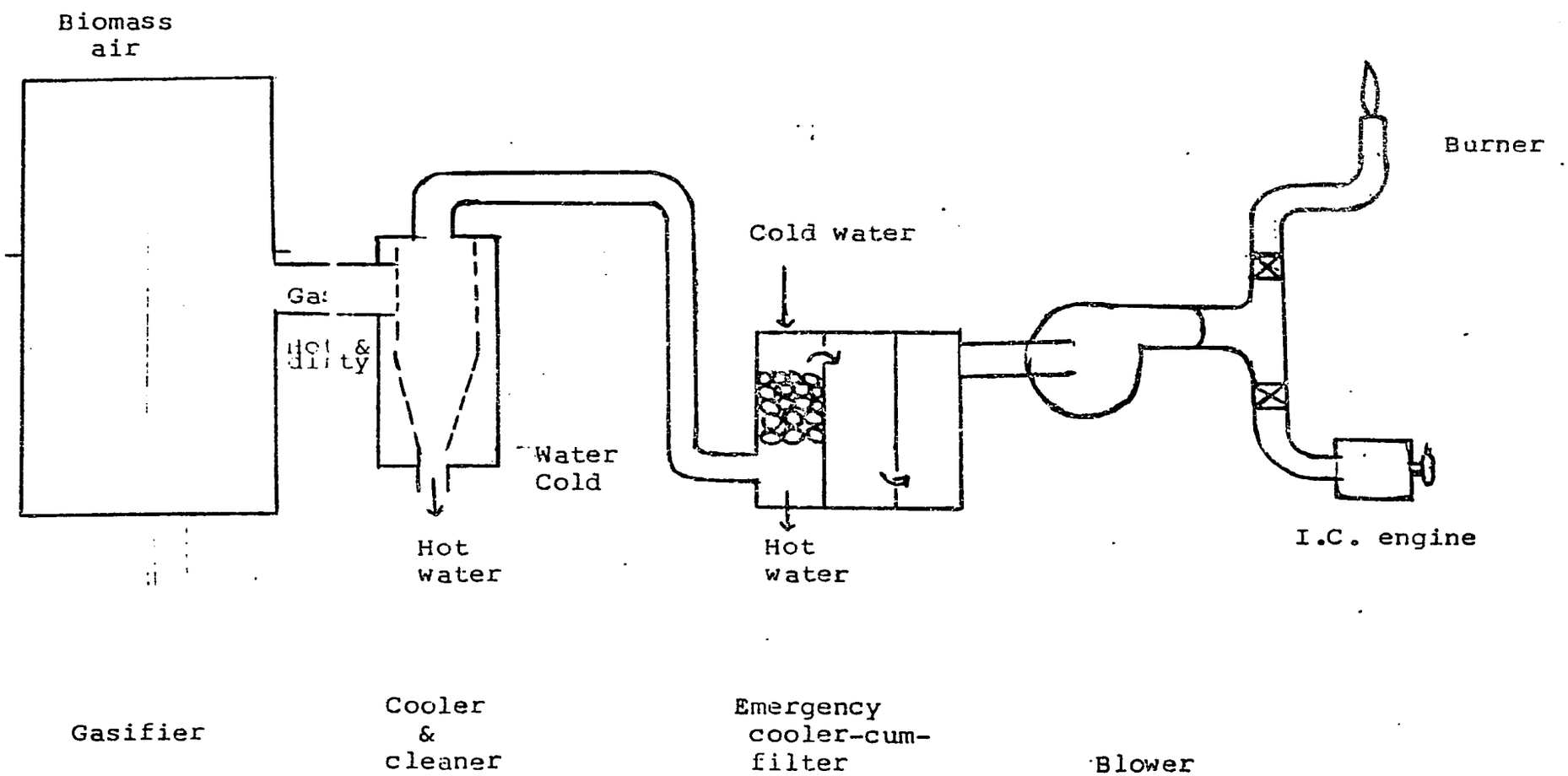

Fig. 6 Schematic representation of biomass gasification system at TCRDC.

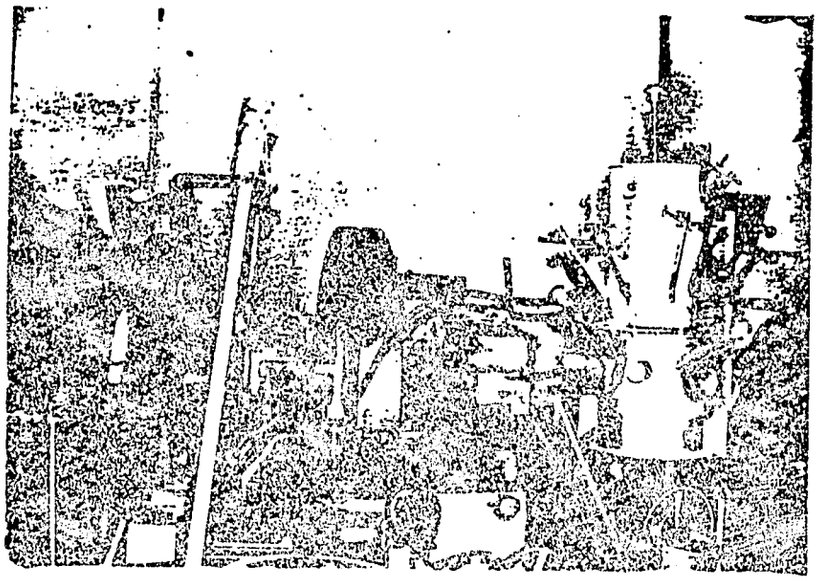

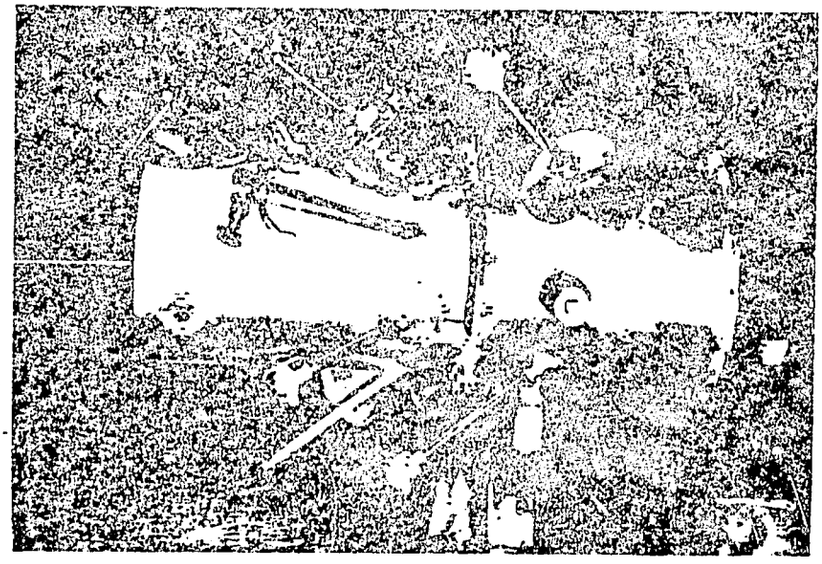

Fig. 7 : Pilot Plant Unit under testing.

APPENDIX - 1

Availability of Pulp & Paper Mills waste at BILT

BILT is utilising various types of raw material for paper production. Hence the waste biomass production is also of various types. The quantities produced is as follow.

(1) Bark = approx. 200 MT per month (2400 MT per year) presently BILT is selling this bark in market. The sales price is Rs.65/- per MT.

(2) Wood dust + Bamboo dust = approx. 12 MT per month (144 MT per year)

(3) Wheat straw = Approx. 4.5 MT /day (seasonal for approx. 100 days) 4500 MT total.

(4) Baggasse pith - seasonal

(5) Sludge = 35 MT per day will be available after commissioning of waste treatment plant. The organic matter in sludge is approx. 54%. Total sludge will be available 10500 MT (on the basis of 300 days operation of waste treatment plant)

In addition to above mentioned material, a huge amount of Biomass, (Agro residues) and urban waste is available around Yamuna Nagar.

APPENDIX - 2

Preliminary economics

On the basis of various experiments conducted at TCRDC and energy survey made for unit Shree Gopal, a plan was formulated to replace the entire quantity of coal being used for lime kiln, a brief economics is presented in following pages. For the calculation of economics a simple method was used, depreciation and various Govt. incentives available were also not considered.

1 Capacity of lime kiln and coal requirement : The present production of lime is 30 MT per day. A new unit of 30 MT per day capacity is also under installation. The present coal consumption is approximately 10 MT per day. The average calorific value of coal, presently consumed is in the range of 4500 - 5200 K Cal/Kg and the approximate cost of coal is approximately Rs.550/- MT.

2 Total requirement of Biomass per day to replace present consumption of coal used in lime kiln : The present consumption of coal is approximately 10 MT of calorific value of 4500 - 5200 K Cal/Kg. Thus, the total energy generated per day = 4.5×10^7 K Cal (1.35×10^{10} K Cal per year).

To replace this energy approximately 4.1×10^4 m^3 of gas per day (1.23×10^7 NM^3 per year) of calorific value of approximately 1100 K Cal/NM^3 is required.

Hence the biomass required is approximately 20.5 MT (Normally wood gives 2.5 - 2.7 NM^3 of gas per Kg of wood. Sue, here 2 NM^3 of gas per Kg of biomass is considered because available biomass contains high ash).

The above mentioned study indicates that the available biomass is sufficient to replace present consumption of coal, and will also be sufficient to offer expanded capacity of kiln.

Estimated capital cost of Gasifier system

		Rs.
(1)	Fuel Handling system	
	* Storage	25,000
	* Fuel Hoppers	25,000
	* Conveyors	25,000
	* Gasifier (3 Nos. 1.5×10^6 K Cal /hr)	6,00,000
(2)	Gas pipelines	30,000
(3)	Kiln modification (New low Calorific value burners)	50,000
(4)	Control equipment	50,000
(5)	Miscellaneous equipment	1,00,000
(6)	Pelletising machine	10,00,000
(7)	Miscellaneous fabrication	30,000
	Construction, erection @ 30% of 1-7 pilot plant study	5,80,000
	Detailed design	50,000
	Total	27,65,000

*One gasifier unit is stand by unit.

Operational Cost

1.	Salary		
(a)	Engineer (B.E.)	One	24,000
(b)	Supervisor	Three	54,000
(c)	Workers	Eight	96,000
2.	Power approx. 125 KWh @ Rs.50/- KWH		3,60,000
	(100 KWH for Briquetting m/c 25 KWH for gasifier)		
3.	Fuel (Biomass) handling cost (@ Rs.10 per MT)		60,000
4.	Travelling etc.		50,000
5.	Maintenance @ 5%		1,35,000
6.	Miscellaneous expenditure		1,00,000
	Total		8,79,000
		Say	8,80,000

Income from present sales

Present sales price of bark = Rs.65 per MT

Total Bark 200 MT /month

2400 MT /year = Rs.1,56,000

Pay Back Period

(a)	Investment	27,65,000
(b)	Present expenditure on coal Rs.550/- per MT & 10 MT coal /day for 300 days in a year	16,50,000
(c)	Operating expenditure per year	8,80,000
(d)	Saving	16,50,000
		- 8,80,000
		7,70,000 per year

Pay Back Period = 3.6 years.

STUDIES ON BIOMASS CHARACTERIZATION

N. Anuradha
Siddhartha Gaur
S.S. Sambi
T.R. Rao
P.V.R. Iyer
P.D. Grover

Department of Chemical Engineering
Indian Institute of Technology
New Delhi, India

STUDIES ON BIOMASS CHARACTERISATION

N.ANURADHA, SIDDHARTHA GAUR, S.S. SAMBI, T.R.RAO, P.V.R.IYER, P.D. GROVER

(Department of Chemical Engineering)

I.I.T. Delhi

Presented at Third Annual Workshop on Biomass and Coal Conversion Programs of the USAID/GOI Alternative Energy Resources Development Project, held at Hotel Maurya Sheraton, from Dec. 5- 7, 1985

Introduction

Rapid depletion of the limited fossil fuel reserves lead to an extensive search for alternative sources of energy, viz. Hydel, nuclear, solar and bio energy. India being an agricultural base country, the availability of substantial amounts of agricultural as well as forest waste material, has attracted considerable attention for developing various technologies for utilizing them as a source of energy. Gas ification technology gained prominence in a view to replace diesel and petrol used by farmers for pumping water.

Any biomass (agro waste) material can be used to generate producer gas which subsequently can be used for I.C. engine operation. The utilization of direct biomass in agricultural wastes,etc. for running large capacity engines more than 100 Hp poses less problems compared to the operation of small capacity engines, i.e. 5 Hp which are mainly used by farmers. This is because firstly, wide variations in the types of fuel and their low bulk density makes it difficult to feed these into the gasification unit, secondly, the high volatiles present in them results in tar etc. requiring elaborate clean up. Modifying the raw biomass fuel into a regular sized feed by partially charring and briquetting them into pellets, makes it very convenient to use and also highly reduces tar formation,etc. Charring and briquetting the agro waste, results in certain energy loss, but, still it is more attractive because of clean and easy operation, and less handling and storage problems,etc. For efficient use of these biomass materials and/or their charred pellets for gasification, a knowledge about their properties, characteristics and their behaviour under various reaction atmospheres is very important.

In the present work four abundantly available agro waste materials viz. corn cobs, groundnut shells, pine needles, cotton stalk have been selected for studying their properties. The above materials are only a few among the many agrowaste materials suitable for gasification.

Sample preparation:

Raw biomass materials are directly used for studying their properties. The charring of these materials is carried out in small reactor vessels under controlled conditions. Chars of different qualities are prepared by varying the charring temperature. All the samples are ground and screened to a proper size for testing purposes.

Experimental Set Up and Procedure

The apparatus consists of various gas supply cylinders, flow meters and a Stanton Red Craft Thermobalance. A weighed amount of the sample is taken in a platinum crucible and kept on the rise rod of the thermobalance and then the furnace is lowered on to the sample. The st. steel tube enclosing the sample is first flushed with an inert gas for 10-15 min. and then the desired gas is allowed to flow through the tube at a prefixed flow rate and the furnace is switched on. The weight loss and temperature of the sample are continuously recorded on the chart paper. The conversions etc. are calculated for the weight loss vs. time or temperature curves.

Results and Discussion

1. Proximate analys_s: This is carried out for various samples in the thermobalance. The samples are gradually heated in an

inert atmosphere until the moisture and the volatile matter are driven off. When there is no further loss indicated, the inert gas is switched off and air is introduced and the heating is continued. The weight cones due to moisture, volatile meter and fixed carbon are obtained from the chart. Figure 9 shows a typical result of the proximate analysis of the sample Raw Pine needle. Figures 1-4 shows proximate analysis results of various biomass fuels both raw and their chars obtained at different charring temperatures. It is seen that for cotton stalk, pine needs, ground nut shell, the trends in F.C., vol., yield are similar whereas in case of corn cob there is a no change in charring characteristics in the temperature range of 400 - 500°C, and the volatile matter is relatively higher.

Pyrolysis:

The results of pyrolysis of various biomass materials are shown in the Fig.(5) in the form of plot between wt.loss/°C vs. temperature. It can be seen from the figure that the maximum rate of pyrolysis lies in the range of 300 - 400 with the exception of ground nut lying in the higher temperature range 500 - 600.

Steam Gasification:

Steam gasification of various bio materials and their chars are carried out with 3:5::N_2:H_2O. The results in the form of plots between % wt.loss/°C vs. temperature are shown in Figs.6-8. From Fig.(6) it is seen that introduction of steam, lowers the temperature of devolatilisation for these materials. The gasification reactor for the raw biomass materials begins at temp. of 700°C and becomes rapid at 900°C. Figs.7 - 8 shows typical

typical results obtained with chars prepared at 400°C and 600°C. Fig.(7) shows significant devolatalization reaction with chars prepared at 400°C compared to the chars (Fig.8) prepared at 600°C. It is also seen that the gasification reactor in both the cases begins at around 700°C and attains a maximum rate around 900°C.

G.N.S.

It is clear from Fig.(6) that raw GNS has a much higher rate of reaction with steam than the other raw biomass.

C-CO_2 reactions

Results of the reaction between CO_2 and various biomass materials and their chars are shown in Fig.10-12. From these figures, it is seen that the reaction rate suddenly reaches a maximum value and then onwards gradually decreases with increase in temperature. The temperatures at which the maximum rates occur gradually increases from raw biomass materials to chars prepared at higher temperatures. Similarly the magnitude of the reaction rates are maximum for raw biomass materials and decreases gradually for chars prepared at higher temperatures. Fig.(13) shows the results of the reaction between wood charcoal and CO_2. The behaviour is very similar to the biomass chars prepared at 600°C except that the maximum reaction rate occurs at relatively lower temperature for the wood charcoal.

Determination of Activation energy

The activation energy for the above reactions carried out under non isothermal conditions are calculated by the method suggested by Coats and Redfern . Typical results are shown in Figures (14) and the activation energies are tabulated in

Table (1). It is observed that in case of raw pine needles, cotton stalk, groundnut shells, there is a distinct change in the slopes of the Arrhenius plot indicating a change in reactor mechanisms from low temperature.

From the results given in table, it is evident that the activation energies are higher for raw materials and the value decreases with increase in charring temperature.

Conclusions:

From the above studies the following conclusions can be drawn.

1. The optimum charring temperature range for the four biomass studies are:

   Corn cob - 300 - 400 ^{o}C

   Cotton stalk - 250 - 350 ^{o}C

   G.N.S - 400 - 500 ^{o}C

   Pine needle - 350 - 450 ^{o}C

2. From the different results shown in Figs.(6-13), it is seen that the groundnut material behaviour differs slightly from the rest.

3. The reaction rates are higher with steam compared to carbon dioxide.

4. The reactivity is also higher with the raw biomass compared to the charred ones.

5. The activation energies also are higher for the raw biomass compared to the charred materials.

To summarise, it is apparent from the above studies that the raw biomass is a better fuel compared to their charred

material. However, as mentioned above, charring is essential for clean and trouble free operation of the gasifier engine system. Optimum conditions must be selected for producing better chars with high reactivity. It can be said that any agro wastes having low ash and moisture content, and non slogging characteristics after charring at optimum conditions can be effectively utilized for gasification.

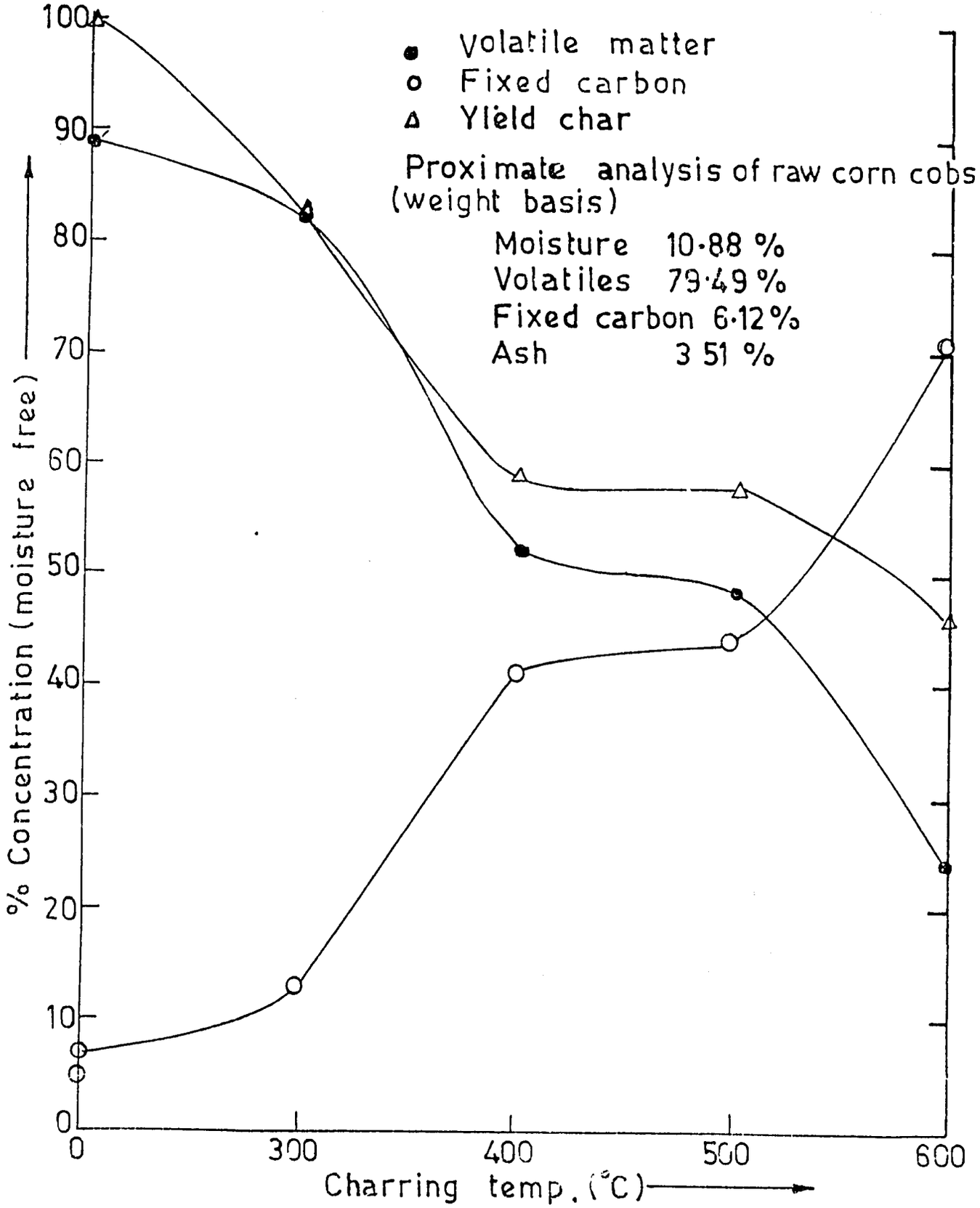
Volatile matter
Fixed carbon
Yield char
Proximate analysis of raw corn cobs (weight basis)
Moisture 10·88 %
Volatiles 79·49 %
Fixed carbon 6·12 %
Ash 3 51 %
% Concentration (moisture free)
Charring temp. (°C)
0
10
20
30
40
50
60
70
80
90
100
0
300
400
500
600

FIG. 1.

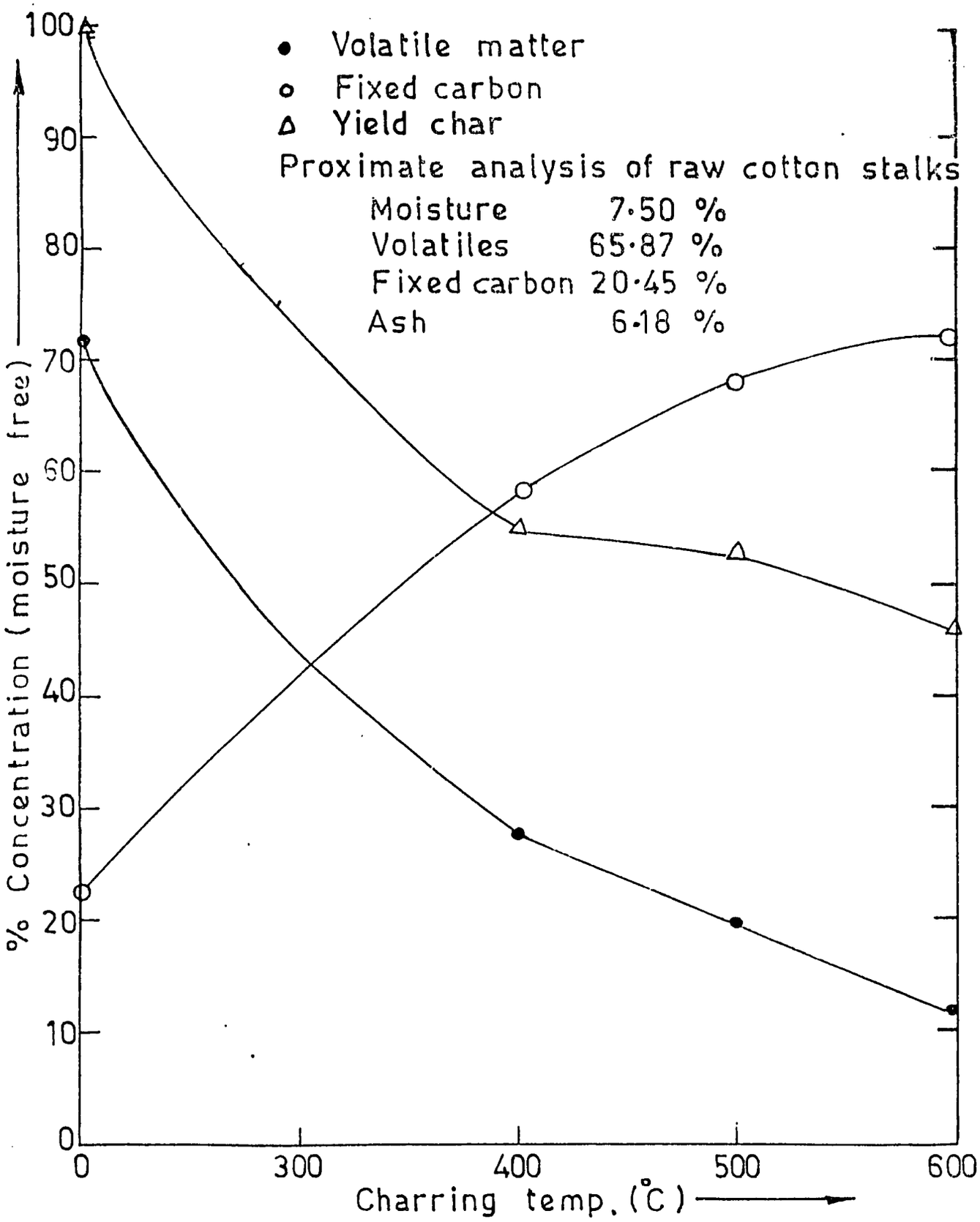
Volatile matter
Fixed carbon
Yield char
Proximate analysis of raw cotton stalks
Moisture 7·50 %
Volatiles 65·87 %
Fixed carbon 20·45 %
Ash 6·18 %
% Concentration (moisture free)
Charring temp. (°C)
0
10
20
30
40
50
60
70
80
90
100
0
300
400
500
600

FIG. 2.

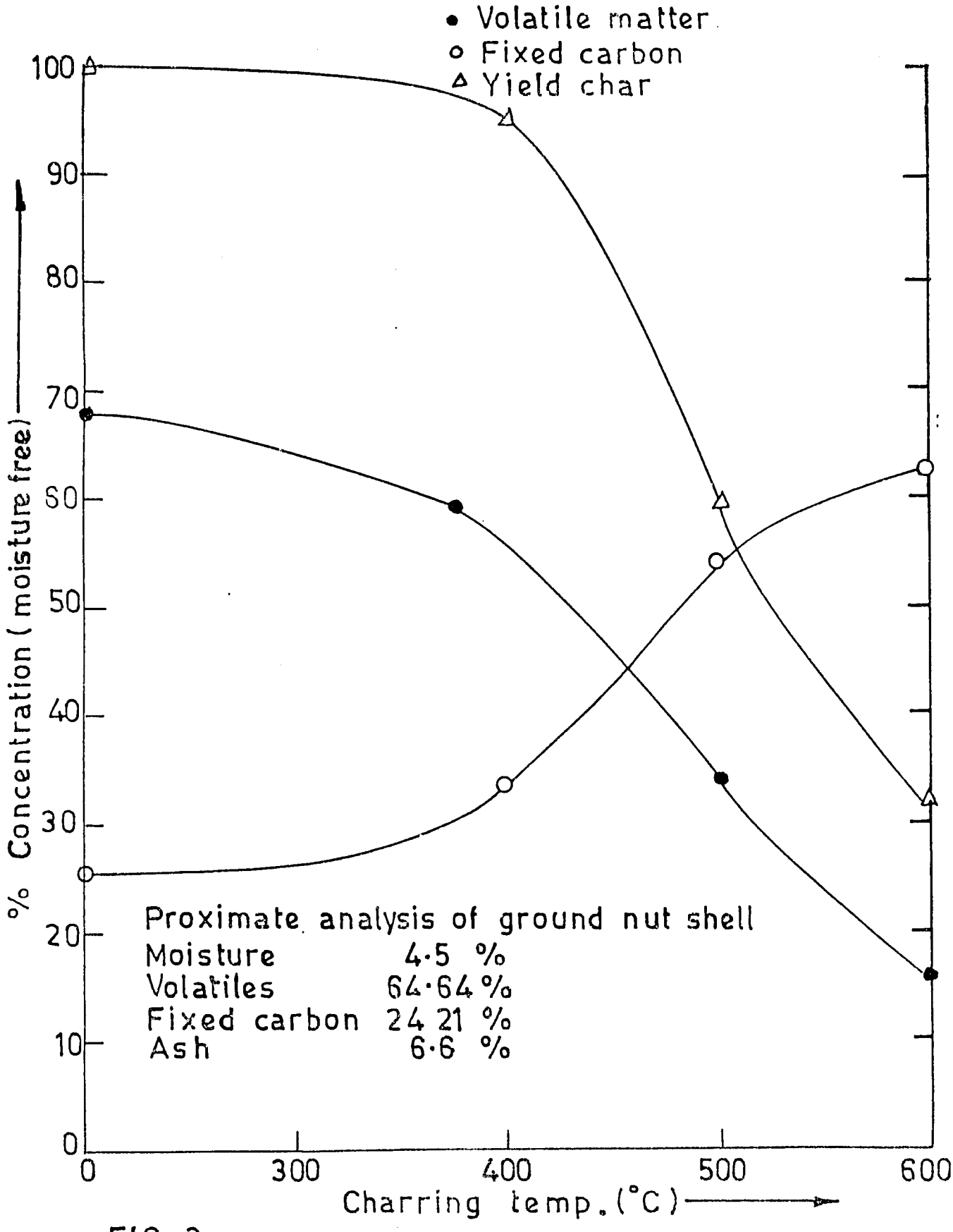
• Volatile matter
o Fixed carbon
Δ Yield char
% Concentration (moisture free)
100
90
80
70
60
50
40
30
20
10
0
0
300
400
500
600
Charring temp. (°C)
Proximate analysis of ground nut shell
Moisture 4·5 %
Volatiles 64·64 %
Fixed carbon 24 21 %
Ash 6·6 %

FIG. 3 .

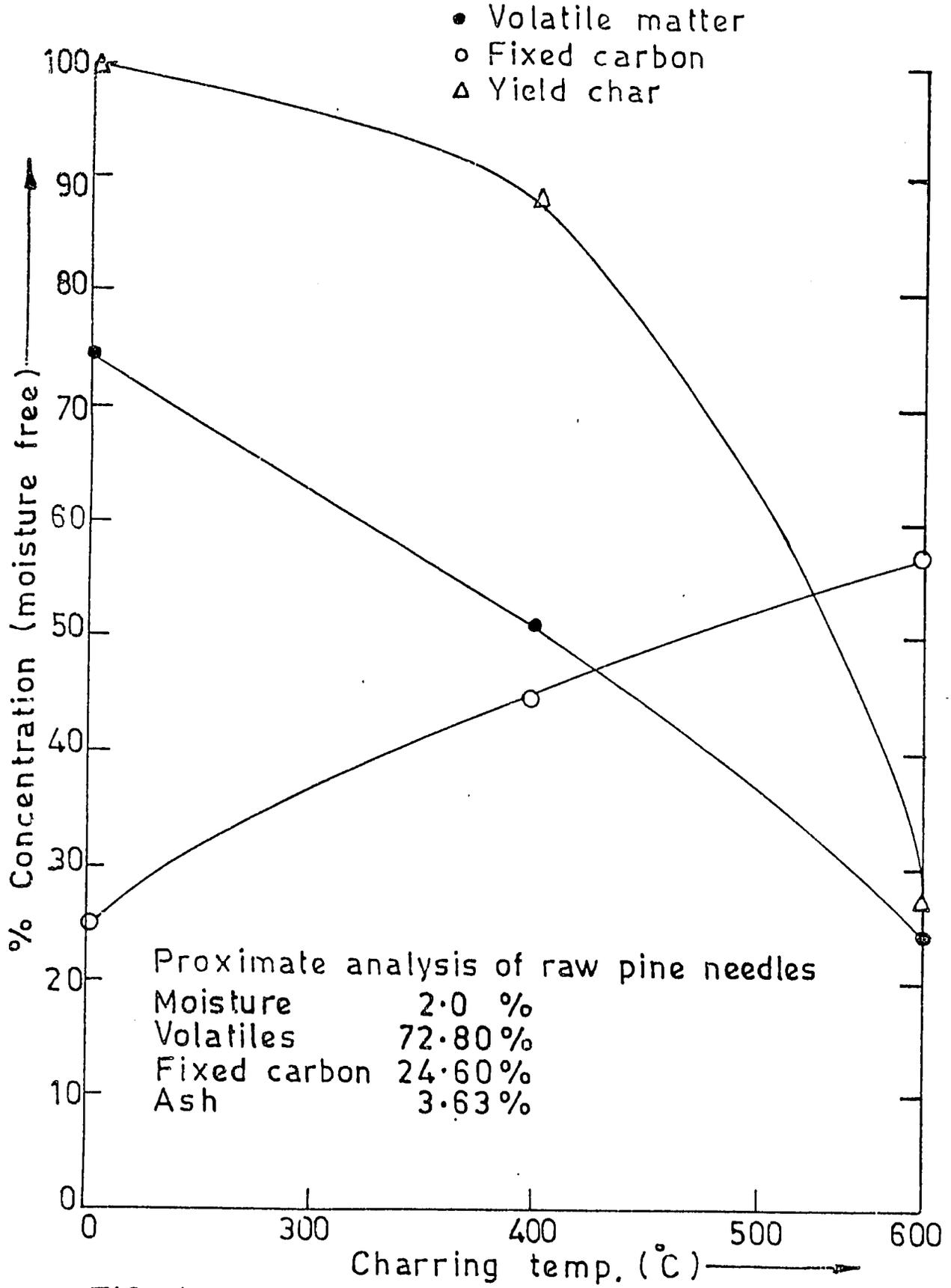
• Volatile matter
o Fixed carbon
Δ Yield char
% Concentration (moisture free)
100
90
80
70
60
50
40
30
20
10
0
0
300
400
500
600
Charring temp. (°C)
Proximate analysis of raw pine needles
Moisture 2·0 %
Volatiles 72·80 %
Fixed carbon 24·60 %
Ash 3·63 %

FIG. 4.

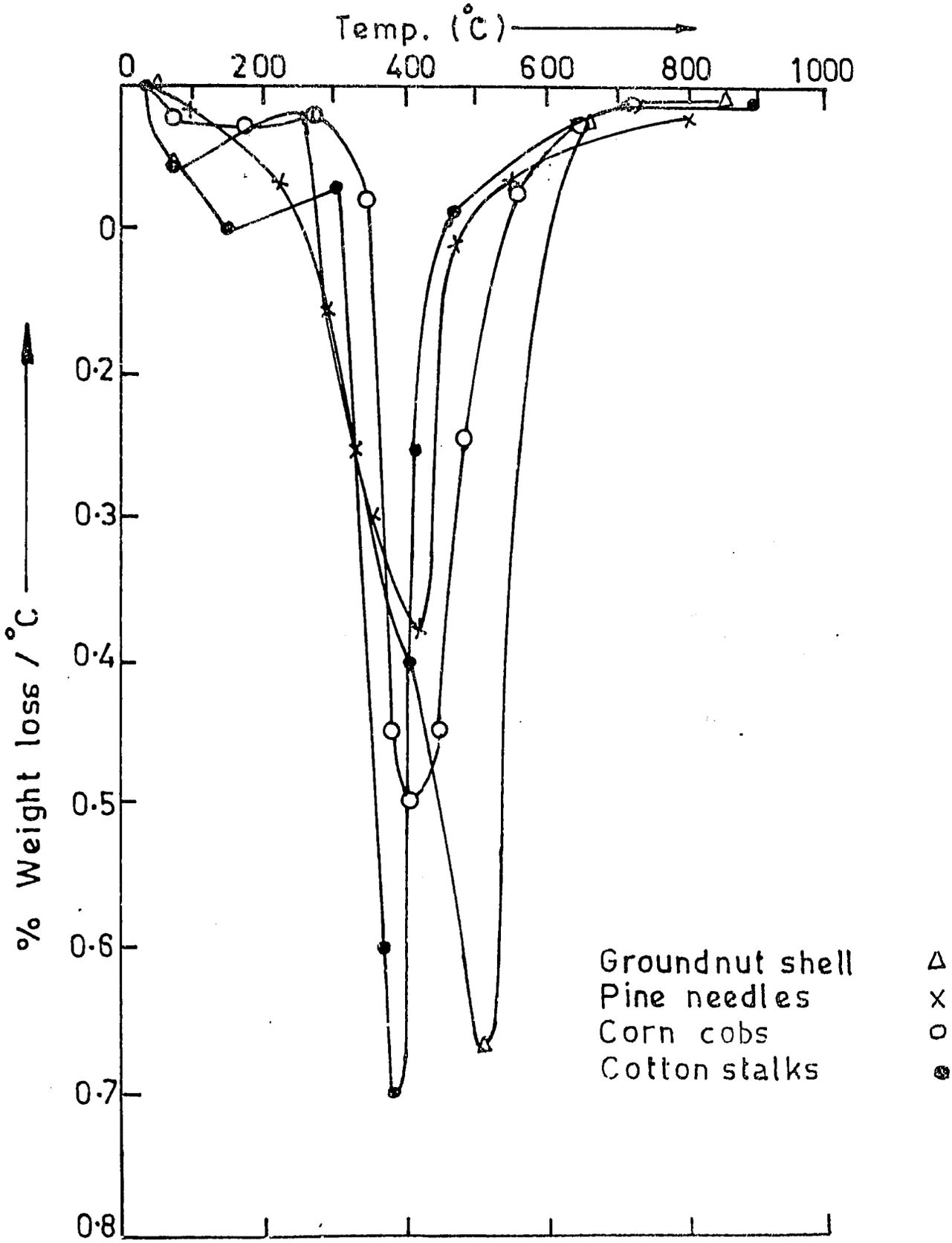

FIG.5. PYROLYSIS OF RAW BIOMASS FUELS

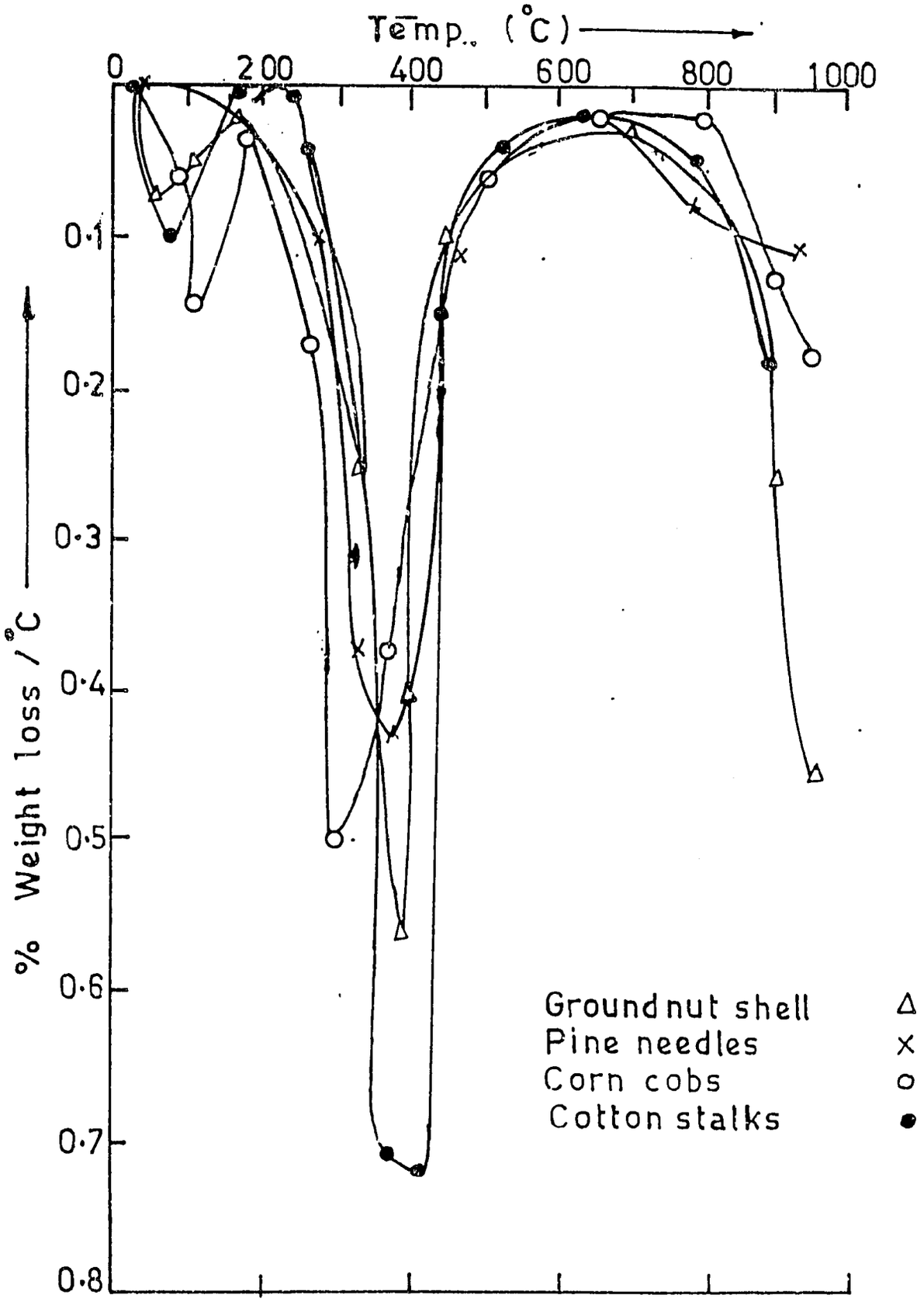

FIG.6. STEAM GASIFICATION OF RAW BIOMASS FUELS

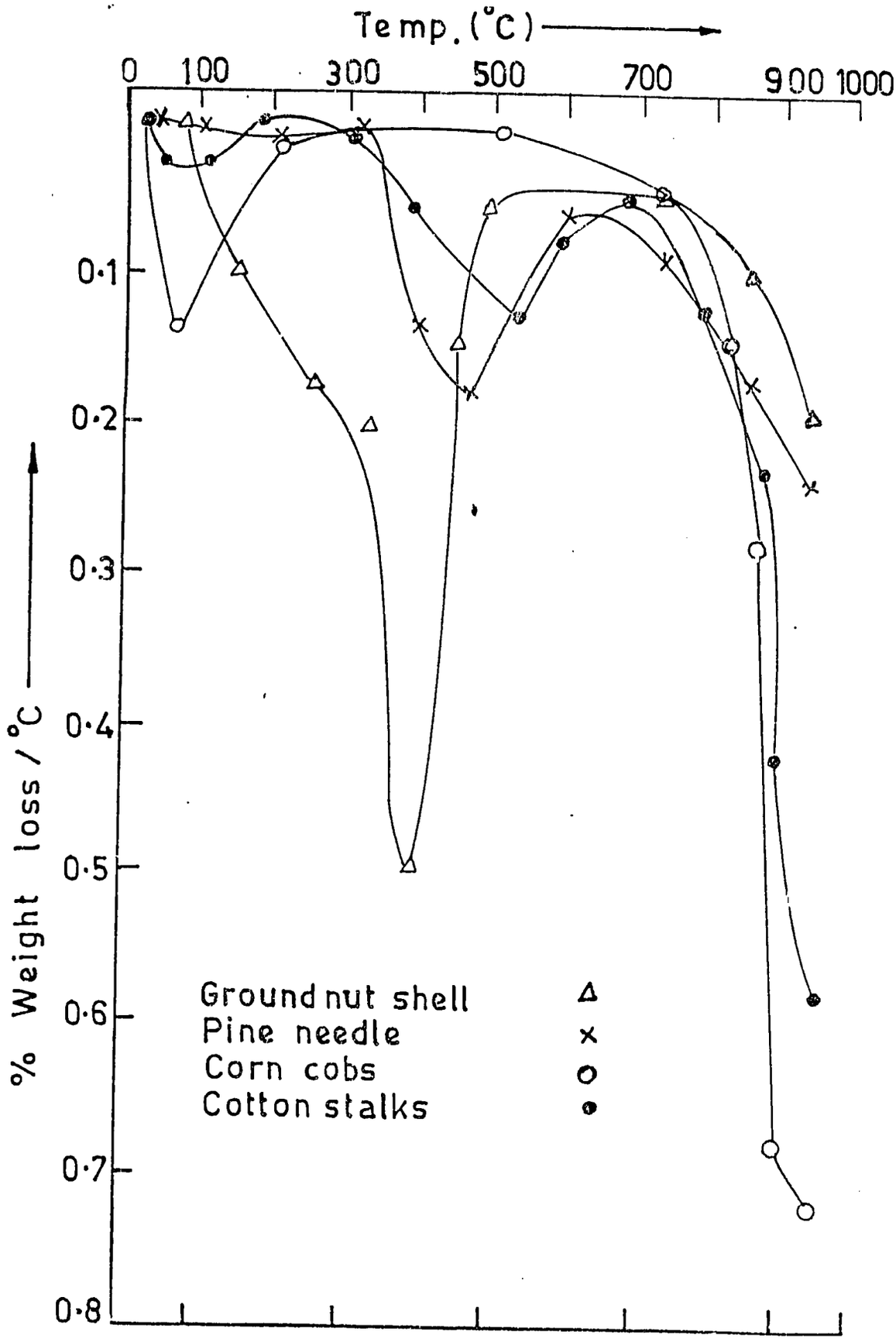

FIG. 7. STEAM GASIFICATION OF BIOMASS FUELS CHARRED AT 400 °C.

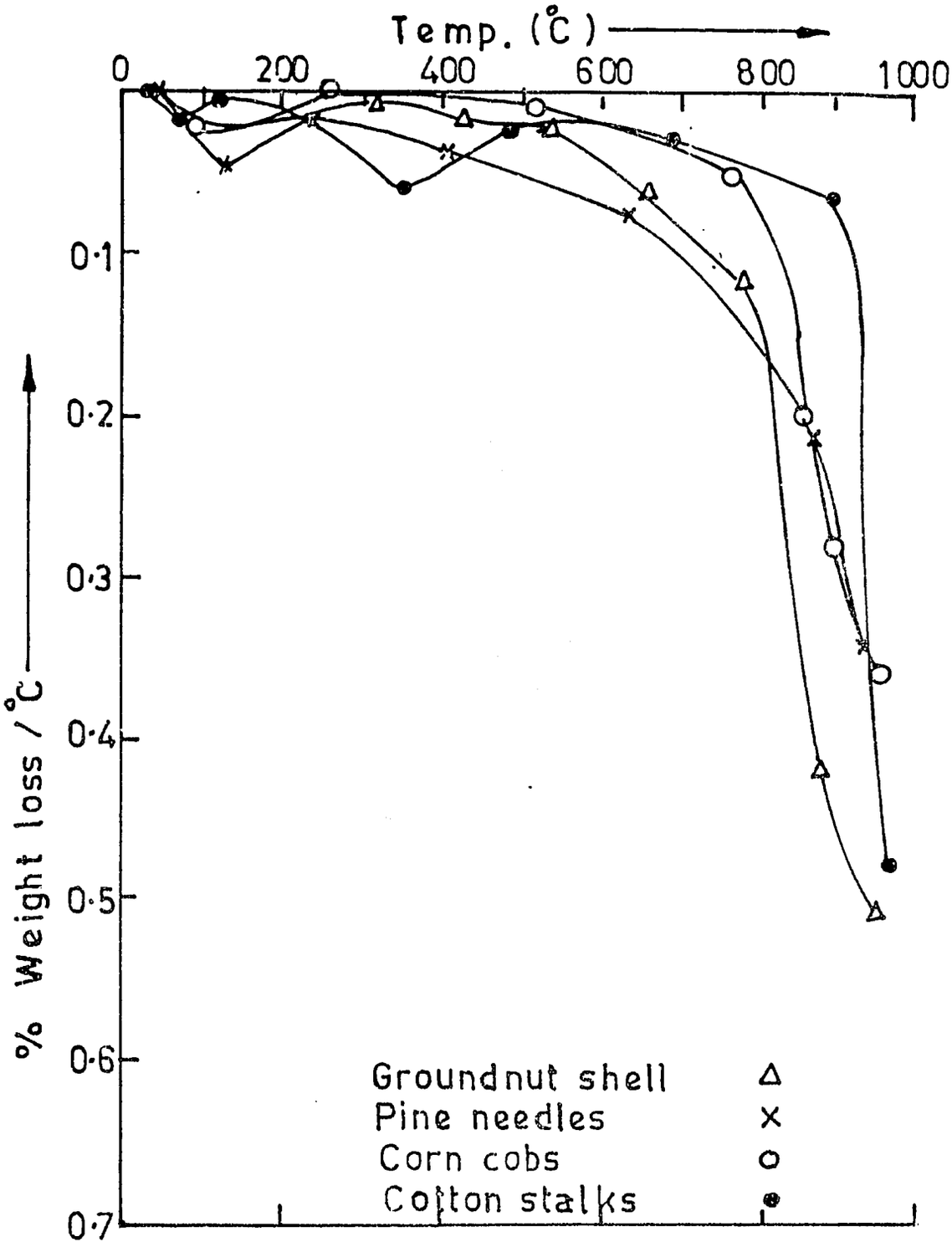

FIG. 8. STEAM GASIFICATION OF BIOMASS FUELS CHARRED AT 660°C

PROXIMATE ANALYSIS OF RAW PINE NEEDLES

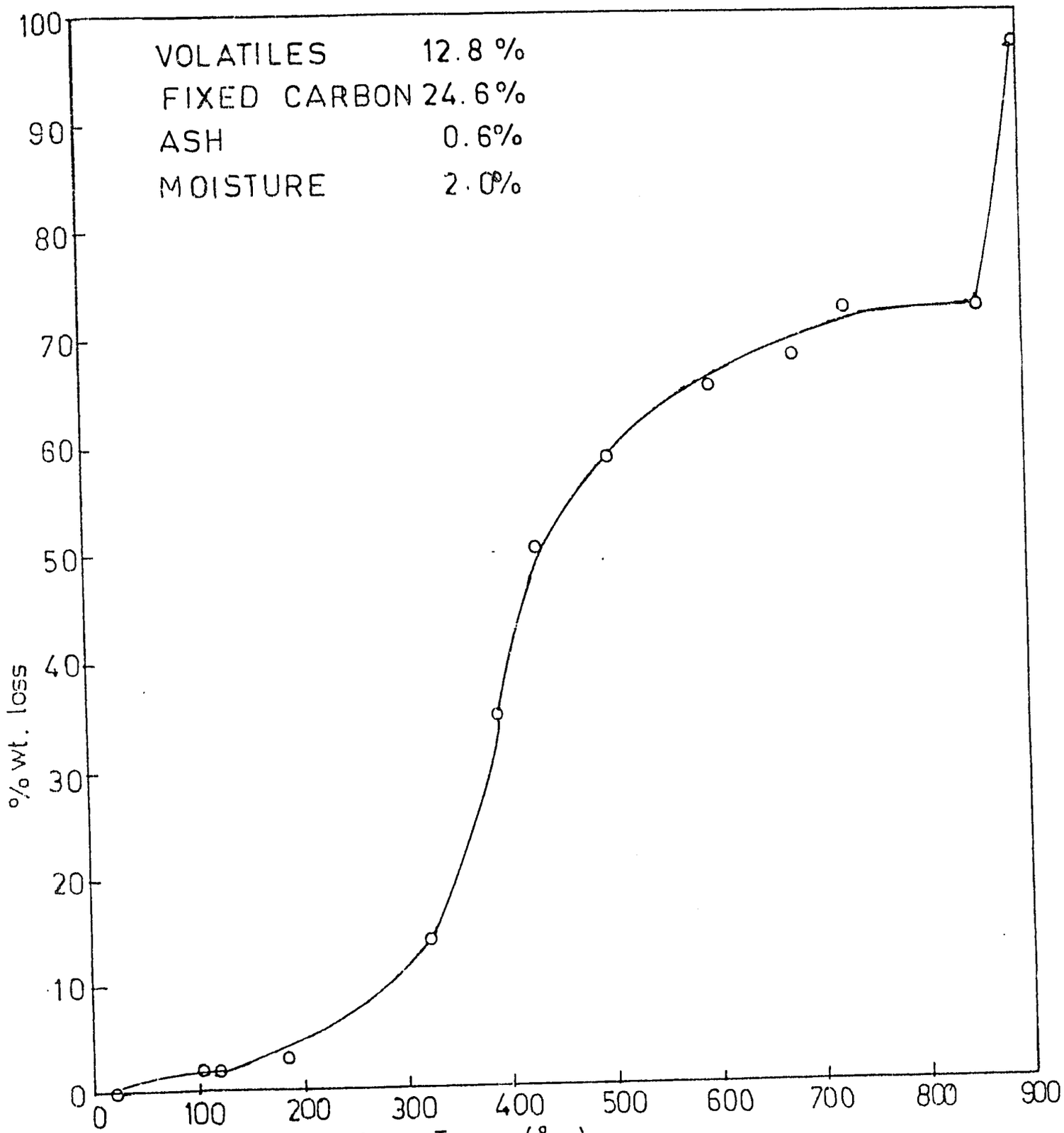

9.

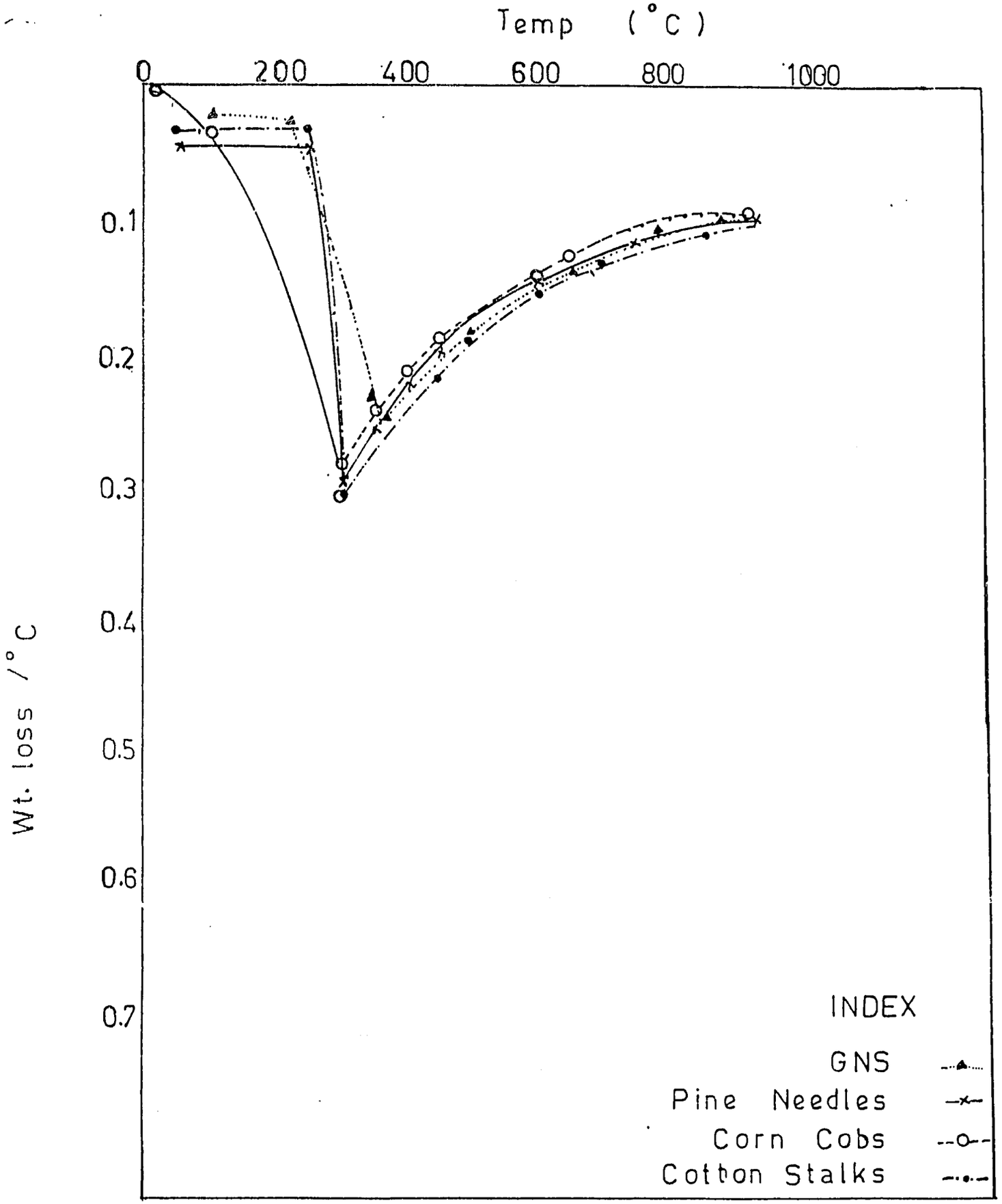

10. $C-CO_2$ REACTION OF RAW BIOMASS

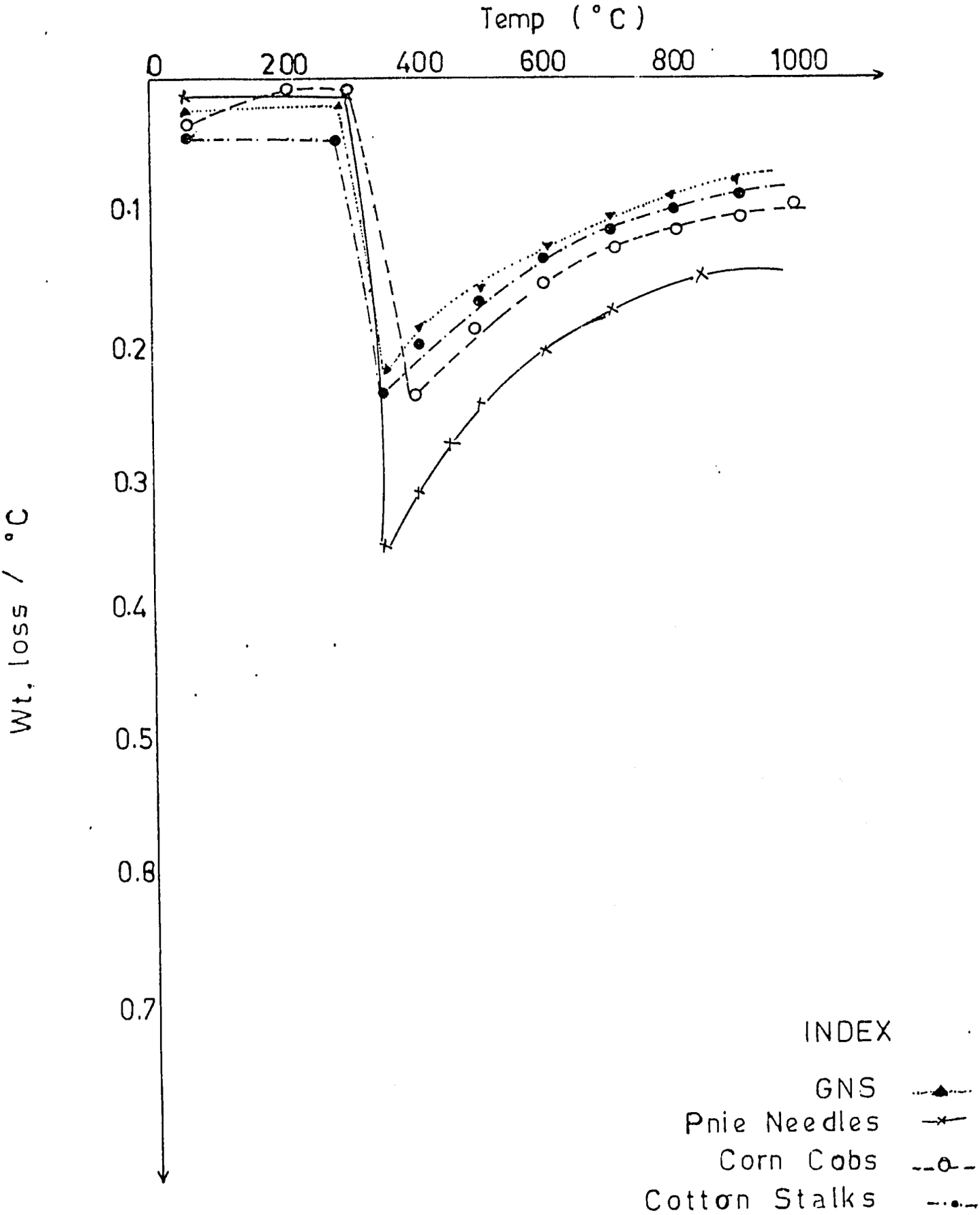

11. C – CO_2 REACTION OF BIOMASS CHAR (400 °C)

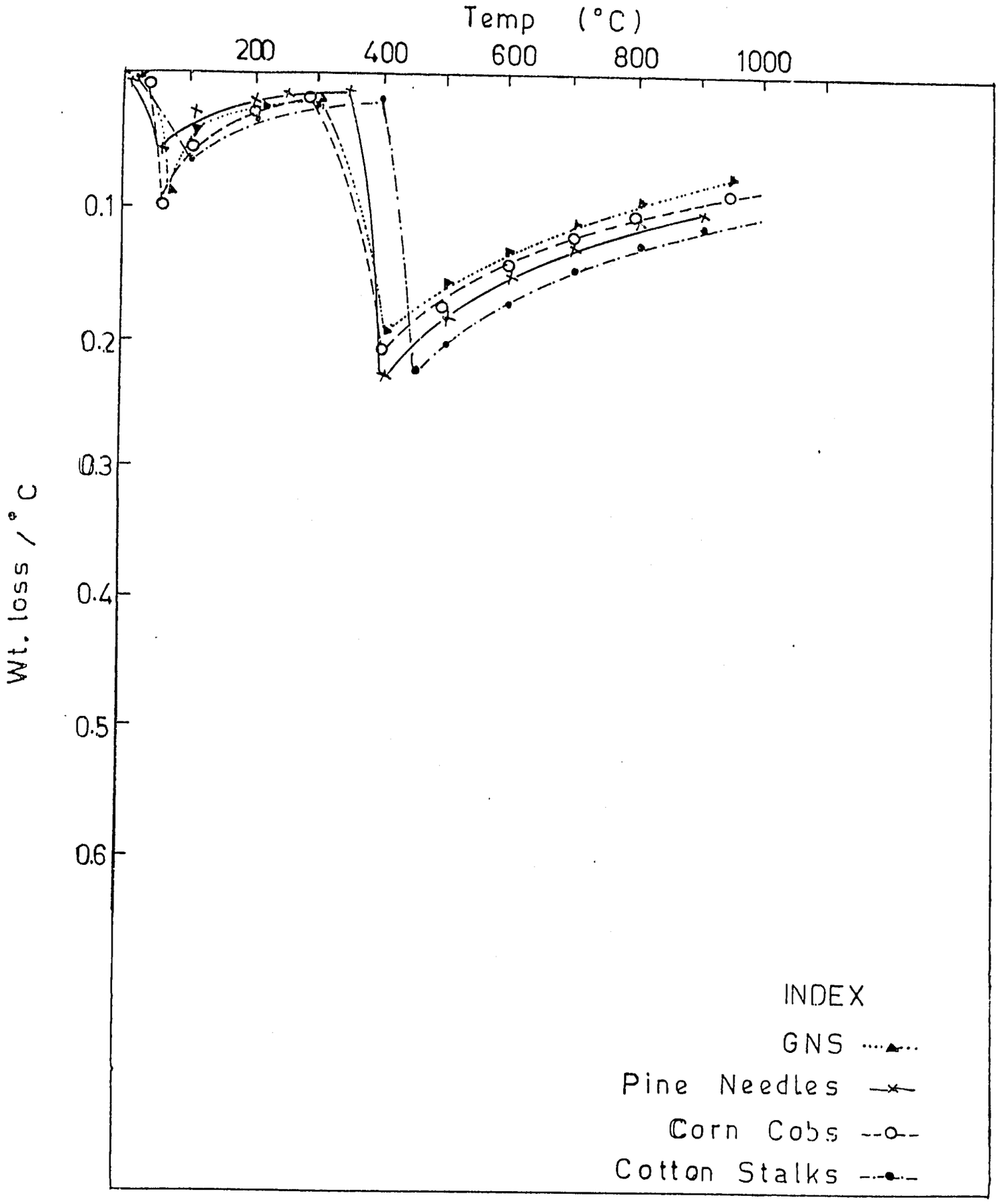

12. C – CO_2 REACTION OF BIOMASS CHAR (600 °C)

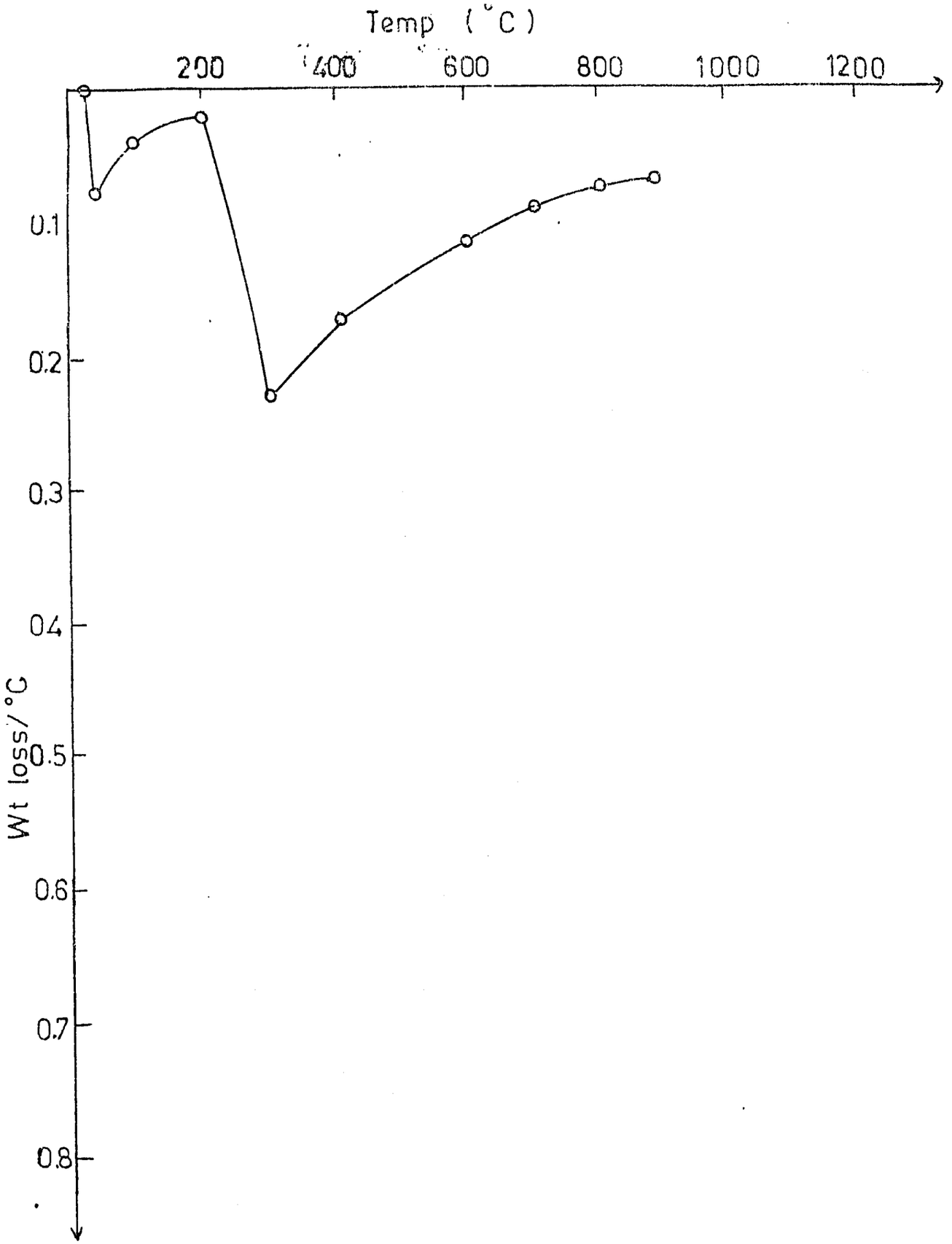

13. C-CO_2 REACTION FOR WOOD CHARCOAL

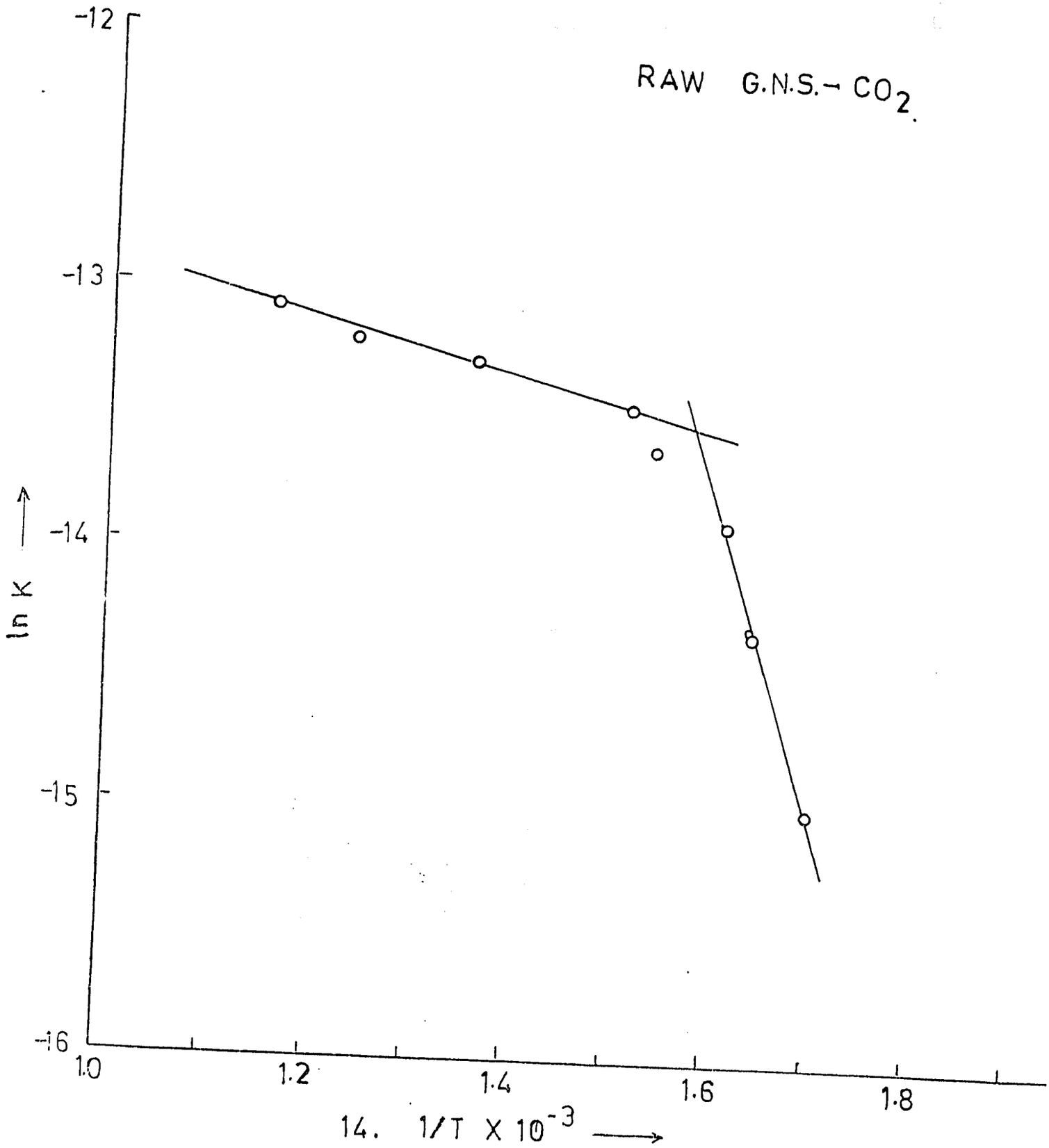
RAW G.N.S.- CO_2.
-12
-13
-14
-15
-16
ln K
1.0
1.2
1.4
1.6
1.8
14. 1/T X 10^{-3}

ECONOMICS OF BIOMASS GASIFICATION TECHNOLOGY

T.K. Moulick

(Paper unavailable at time of publication)

PROGRESS OF ONGOING PROJECT

K.V. Gopalkrishna

(Paper unavailable at time of publication)

TAR PRODUCTION DURING GASIFICATION

P.P. Parikh
P. Arikkat
A.G. Bhave
Uma Ramaswamy

Indian Institute of Technology
Bombay, India

TAR IN PRODUCER GAS WHY AND HOW MUCH.?

*PARIKH P.P.
Professor

*ARIKKAT PAUL.
Research Engr.

*BHAVE A.G.
Research Engr.

*RAMASWAMY UMA
Research Asst.

CONCERN ABOUT PRESENCE OF TAR IS DUE TO

* ENGINE PERFORMANCE IMPAIRMENT
* LUB.OIL CONTAMINATION
* INCREASED ENGINE MAINTENANCE
* REDUCED ENGINE LIFE
* EXHAUST EMISSIONS

ENGINE PERFORMANCE IMPAIRMENT

* CONDENSATION IN INLET CHANNEL ON VALVE & VALVE-STEM ETC.
  - VALVE STICKING
  - LOSS OF COMPRESSION
  - LOSS OF POWER
  - STOPPAGE OF ENGINE

* DEPOSIT FORMATION ON COMBUSTION CHAMBER WALLS, PISTON TOP, VALVES, NOZZLE TIP
  - CHANGING THE CHARACTERISTICS OF SYSTEM

* CORROSIVE AND ABRASIVE WEAR
  - LOSS OF COMPRESSION
  - LOSS OF POWER AND EFFICIENCY

LUBOIL CONTAMINATION

- PHENOLIC COMPOUNDS
- LOSS OF PROPERTIES
- INCREASED WEAR
- INCREASED LUB-OIL CONSUMPTION RATES
- DECREASE IN OIL CHANGE PERIOD
- INCREASED EXPENSES

INCREASED- MAINTENANCE

- FREQUENT CHANGES OF LUB-OIL
- INCREASED WEAR
  * BEARINGS
  * PISTON & LINER
- NOZZLE CLEANING
- DECARBONISATION OF CYLINDER HEAD VALVES, PISTON CROWN ETC.

EMISSIONS

* EXHAUST

  - MORE PARTICULATES
  - HEAVY HC

* CRANK-CASE

* SYSTEM

  - WHEN ENGINE IS STOPPED

ISSUES INVOLVED

- CAUSES OF PRESENCE OF TAR AND INFLUENCE OF DESIGN AND OPERATING CONDITIONS ON TAR QUANTITY

- ASSESSMENT OF POSSIBLE MINIMUM LEVEL OF TAR IN GAS

- ASSESSMENT OF TAR-TOLERANCE OF I.C. ENGINES

- TAR REMOVAL FROM GAS

- EFFECTIVE & ACCURATE METHOD OF TAR MEASUREMENT

WHY TAR ?

- BIOMASS GASIFICATION CONSISTS OF

  * DRYING
  * PYROLYSIS
  * OXIDATION
  * REDUCTION

- PYROLYSIS

  RELEASE OF VOLATILES

  - UPTO 340°C NON-TARRY PYROLYSIS CONDENSIBLES
  - AT $>$ 340°C TARRY PRODUCTS

TAR IS PRODUCED IN SECONDARY PYROLYSIS ZONE

GAS & CONDENSIBLE PYROLYSIS PRODUCTS PASS THROUGH HIGH TEMPERATURE OXIDATION ZONE

* TARS SHOULD GET

  - CRACKED
  - BURNED
  - GASIFIED

  IN OXIDATION ZONE AND IN HOTTEST LAYERS OF REDUCTION ZONE

* SUCCESSFUL TAR CRACKING IN OXIDATION ZONE REQUIRES

  - HIGH TEMPERATURE UNIFORMITY
    I.E. NO DARK ZONES
  - ADEQUATE RESIDENCE TIME

TEMPERATURE AND UNIFORMITY DEPENDS UPON

* DESIGN OF OXIDATION ZONE
  - SIZE AND GEOMETRY OF ZONE
  - LOCATION OF AIR TUYERS
  - NO. OF TUYERS
  - VELOCITY OF AIR THROUGH TUYERS

* CONSISTENCY OF BIOMASS FLOW RATES TO THE ZONE

* GAS FLOW RATES
  I.E. ENGINE LOAD

* BIOMASS MATERIAL PROPERTIES
  - COMPOSITION
  - MOISTURE CONTENT

HOW MUCH TAR ?

THEORETICALLY IT SHOULD BE ZERO TAR

PRACTICALLY TAR-FREE GAS IS A MYTH.

PRACTICAL APPROCH IS TO

- DETERMINE TAR TOLERANCE OF I.C. ENGINES
- DESIGN AND DEVELOP
  POST GASIFICATION TAR-REMOVAL SYSTEMS TO MEET
  ENGINE REQUIREMENTS.

TWO IMPORTANT POINTS :

HOW TO MEASURE TAR ?

WHAT IS TAR ?

APPLICATION-SPECIFIC DEFINITION OF TAR

LITERATURE ON TAR

MEASUREMENT OF TAR	ANALYSIS OF TAR
THREE TYPE OF METHODS	300 CONSTITUENT COMPOUNDS HAVE BEEN IDENTIFIED

13

TAR MEASUREMENT METHODS

COLLECTION OF ALL CONDENSIBLES AND PARTICULATES IN CHILL CHAMBERS AT $0^{o}C$.

PARTICULATE AND SEPARATION BY SOLVENT WASHING

TAR ESTIMATION BY SOLVENT EVAPORATION.

[DA SILVA, HUMBOLD WEDAG]

* DA SILVA OVEN HEATED THE CONDENSIBLES FOR 30 hrs. RESIDUE WAS CALLED TAR

TAR MEASUREMENT METHODS

COLLECTION OF ALL CONDENSIBLES AND PARTICULATES ON FILTER ELEMENTS AT 100 - 110°C

CHILLING THE POST FILTER FLOW TO 0°C

PARTICULATE SEPARATION USING A SOLVENT FOR TAR

TAR ESTIMATION BY :

SOLVENT EVAPORATION

SOLVENTS USED - ACETONE, DI-CHLORO METHANE AND BENZOL

OR

GREY SCALE METHOD (TIPI)

[TIPI, THT, UNDP/WORLD BANK, HEDDEN]

- METHODS ARE SIMPLE
- REASONABLY ACCURATE
- SETUP REQUIRED IS SIMPLE
- SUITABLE FOR FIELD MONITORING

TAR MEASUREMENT METHODS

ISOKINETIC SAMPLING

COLLECTION OF PARTICULATES ON FILTER AT 200°C.
PARTICULATE DETERMINATION BY WEIGHT DIFFERENCE
CHILLING OF POST FILTER GASES IN IMPINGERS AT 0°C.
COLLECTION OF CONDENSIBLES BY WASHING THE IMPINGER TRAIN BY A SOLVENT DETERMINATION OF TAR BY SOLVENT EVAPORATION.

[TECHWEST ENT., ENFOR]

ANALYSIS OF TAR

* CONSTITUENT COMPONENT IDENTIFICATION AND QUANTIFICATION
* ELEMENTAL ANALYSIS
* CALORIFIC VALUE

CONDENSATE FROM GAS

- WATER AND WATER SOLUB--LE ORGANICS
- WATER INSOLUBLE TAR
- PARTICULATES

ESTIMATION OF WATER CONTENT BY KARL-FISCHER TITRATION

ESTIMATION OF WATER SOLUBLE ORGANICS BY CHROMATOGRAPHIC SEPARATION (THOSE HAVING B P $\leqslant$ 100°C)

TAR (HEAVY HYDRO CARBONS B P $\geqslant$ 180°C)

EXPECTED COMPOUNDS ARE :

PHENOLS	ANTHRACENE
CRESOLS	BENZOPYRENE
XYLENOLS	PYRENE
PHENANTHRENE	FLUORANTHENE ....

METHODS OF ANALYSIS OF TAR

CONSTITUENT COMPOUND IDENTIFICATION

AND QUSNTITATIVE ESTIMATION

THREE ANALYTIC METHODS ARE USED

* CAPILLARY COLUMN GAS/LIQUID CHROMATOGRAPHY FOR IDENTIFICATION AND QUANTIFICATION

* MASS SPACTROMETRY FOR IDENTIFICATION AND GAS CHROMATOGRAPHY FOR QUANTIFICATION

* F T I R FOR IDENTIFICATION AND GAS CHROMATOGRAPHY FOR QUANTIFICATION

IN ALL THE THREE METHODS IT IS REQUIRED TO

- CLEAN THE SAMPLE OF PARTICULATES
- DISSOLVE IT IN A SOLVENT
- SAMPLE SOLUTION INJECTION IN THE EQUIPMENT

F T I R| G C TECHNIQUE IS STATED TO BE EASY AND ACCURATE

QUESTIONS AND ANSWERS - BIOMASS CONVERSION, AFTERNOON SESSION, DECEMBER 6, 1986

P.P. Parikh - IIT-Bombay

Q. What is the efficiency reduction as a function of the load?

A. If the mixture goes below the lower inflamability limit, that is when the problems start. Don't go below 40%, if 50% is the excess air. In that range, the efficiency really drops, and drops drastically. I won't be able to give you the figures, I don't have them handy. Certainly between 40 and 90 for 50% there is no problem of efficiency.

Q. I understand that you have internal combustion engines working on natural gas elsewhere in the world. You also mentioned methane, which is also a natural gas, at the end of your talk. How is the operating experience of natural gas driven engines tied in with your chart? Secondly, as we heard from Professor Mathur, injecting producer gas has severe environmental problems. Would biogas have the same type of environmental problems?

A. No, I think the environmental problems come from carbon monoxide emissions. Obviously biogas doesn't have a problem. As far as methane engines are concerned, most of the ones that are being used are spark ignition engines. So dual fuel operations with methane have rarely been used, so I will not be able to compare what I am trying to predict here and what has been the experience. There are methane engines working on our offshore ONGC platforms and they seem to be working beautifully with no problems, but they are desinged for it. When we are talking of the existing engines, the problems are of a different nature.

Q. Have dual fuel engines been tried with spark ignition?

A. In certain laboratories, with spark ignition, especially when there are starting problems. But dual fuel is not being used continuously. The engine is started on a given fuel for which the engine is designed and then it is run on another fuel.

Q. In the USA, the technology exists for using a teflon coating on the engine for lubrication, while the engine has been running. I understand that it has been approved by the Federal Aviation Authority in America and that the engine has been coated with teflon. You can drain out all of the lubricant, and the engine will be finished in half an hour. You can strip the engine and see that there has been no damage to the engine. Now, the cost is about $32, equal to about 400 rupees. It might be worthwhile to coat the engine that way in India as well. I don't know if there have been

any studies done on this, but certainly teflon is the slipperiest material available and it might sort out the problem of sticking piston rings, and other things.

A. I'm not aware if any thing is being done in India. I know about substances like ceramic coatings being tried, but that is for a different purpose all together. Not for lubrication.

Q. Have you had any problems with spark ignition engines and producer gas?

A. Dr. Vimal recently sent one gasifier and spark ignition engine to my lab. It has been running on full load for the last eight days. The only real limitation I have is the starting problem.

C. Most of the engines in the States are spark ignited engines, so we have a lot of experience in producer gas from sizes going up to 200 to 300 kw. I think there are no problems as long as the gas is clean and cool.

Q. Would you say that it is impossible to have a spark ignition engine?

A. In a diesel engine you have to make major changes. The spark plug must be incorporated. If you change the compression ratio, you can certainly run the engine on spark ignition.

Q. What if you don't know the structure of the engine?

A. It's for existing engines, without major modifications. I am talking of major engines. If you want to have spark ignition engines, I am not saying that it is impossible. It is certainly a possibility, but it does require a lot of modifications in the existing engines, or development of new engines.

Q. When your diesel is 17-20% do you require a change in the compression ratio of the engine?

A. No.

Q. There will be no de-rating from 17-20%, also?

A. It will depend on the gas quality.

Q. What is the minimum calorific value of the gases, or the total mixtures that you use?

A. For these calculations, the calorific value has been assumed to be 100 kcals per cubic meter.

Q. That is the minimum?

A. Yes.

C. I would like to make two comments. One about the diesel engine and another about the spark ignition engine. Mrs. Parikh has brought out the various aspects of operating the existing diesel engines. I want to add our experience in this. We can have dual fuel operation, and pilot injection. So long as the substitution of producer gas is up to about 70 or 75%, you have about 30% energy supplied by it. Diesel oil can get the same power and the same efficiency. In this way you have reduced the smoke. But if you go to pilot injection, where you keep a greater proportion of energy supplied by producer gas, with hardly 10 to 30% energy supplied by diesel oil. Then there is a rapid de-rating of the engine, and loss of efficiency. There will be 15-25% power loss. Therefore we should keep in mind that we may claim to have 90% replacement, at the cost of power, and at the cost of efficiency. The efficiency is drastically reduced.

The second comment I wanted to make was we did operate a spark ignition engine for a long time on producer gas. We found that in the case of a spark ignition engine, there was reduction in power and also a reduction in efficiency.

A. Spark ignition basically means zero excessive air. So what ever is represented on the chart for zero excess air, it is roughly a 50% power drop at the same rpm. Because of the flame velocity, you can't even release the rpm, so it is going to be even further. In fact, if you take an automotive engine, the power that you finally get as a spark ignition engine, it will be at just about 20-25%. You can't even go to 3000 rpm -- it won't burn.

C. I think this has been very well pointed out by Mrs. Parikh. As long as the speed is around 1500 rpm or so, diesel gas substitution is all right. A question was raised about injection timing. Injection timing has an influence at rpm where you can play with injection timing, and there is still some power loss. The rpm are around 1500, so if it is below 1200, it has no effect. You cannot play with it. This is what we have experienced. But the broad principles are that if you go for too much producer gas substitution, you will have drastic reduction in power efficiency; therefore, when you quote the percent substitution without quoting the efficiency in power output, it is very misleading.

A. Everything has been written, I think, on these charts; power output, et cetera, and, as I said, these are the assumptions made.

Q. Can Mr. Abu Talib tell us what is happening in other small countries, if you have some reports.

A. I think Virgil was in the Philippines recently. When we are talking about charcoal and dual fuel operation, in most of the gasifiers that I have

seen the replacement has been around 50%. They have had problems with the charcoal cost being very high. The way they are making the charcoal, there has been no quality control. So there have been operational problems. There were spark ignited units in Indonesia. These were the German Imburg Units. They operated for a while, and I think the fuel moisture was very high in the cleanup. So the engines were pretty gummed up. The only success story I know of is in Brazil. They have a very organized fuel production and distribution system. In other words, Brazil produces a lot of charcoal for a steel industry, and with the scraps of charcoal that are left over, entrepeneurs have gotten into the business of using that charcoal, either by pelletizing the left over charcoal then selling it to the owners of the gasifiers. But they are making more money selling the charcoal that has been left over. It has already been subsidized by the steel industry. Those are the only successful gasifiers in developing countries that I am aware of. Brazil is the only example. There are a lot of thermal gasifiers and a lot of power gasifiers. This is a secondary operation. They were not producing charcoal just for the gasifiers. They were producing the charcoal for the steel industry, and the left over was being used for the gasifiers. They control the specifications. Most of the other countries' operations have been very mixed. Gasifiers donated by the French, the Germans; they operated as long as the engineers were they. Once they were left out, the operation ceased. Virgil Flanigan may be able to add something more. He was in the Philippines last year.

C. The Philippine operation was very difficult at best. I think if you started analyzing the cost of the charcoal and the savings, you quickly realize that it was very hard to operate the system with any gain or savings. Not only did we quickly realize that, but the farmer also quickly realized that he really wasn't saving any money by using a charcoal gasifier. Also, it was quite apparent that there was a capability of operating differently from place to place. There was a set of tuyeres, and there was an adjustment capability where you could run with three tuyeres or two tuyeres, or a top tuyere or not a top tuyere, and needless to say, every place we went was operated a little bit differently. None of them operated like the manual said they should have been operated. Gas quality was a big problem. The gas substitution they talked about was about 70% replacement, but they probably got 40% replacement. Also, the engines were all 50 horsepower -- much larger than what we are talking about here -- four cylinder, I think, at 2400 rpm. I would have to check that. Then you look at the gas cleanup equipment which was a complicated system even though they were burning charcoal. It had a lot of engineering things we could discuss. There were real problems with the gas systems in the Philippines.

C. I think the Missouri gasifier is too complicated for the India situation because cleanup is very cumbersome. So, the reason the Missouri gasifier was given was not because we were trying to get the design that was suitable for India, it was a need at the time for both teams to have a common denominator in terms of the gas quality. The Missouri gasifier was never intended to be applied in an Indian village, and it may not be suitable. I don't think it is suitable. One more comment; most of my experience has been that no biomass, particularly gasification, was economically viable unless it was an integrated process. For example, a

rice mill has a waste available to it. Then you put in a co-generation plant, and the cost of the raw material is nothing. Those are the successful plants. A pulp and paper mill, for example, has the bark and the waste available so that the boilers and the co-generation are there -- those are the successful, economically viable processes. If you are trying to design a project based on forestry or plantation wastes, or trying to chip nice quality wood, I don't think any project will be economically viable. It has been proven in the Philippines and other countries. The only successful biomass projects have to be integrated operations. Alone, the biomass projects are not economically viable today.

N. Anuradha - IIT-New Delhi

Q. There is data available which says you can char at various temperatures. Suppose you char isothermally at 300°C for a long duration. Again, there will be an end product. Then you do it at higher temperatures, isothermally, for a long duration. At lower temperatures, the statement is that you get higher fraction of char - as much as 50%. Your experiments were essentially time dependant using TGA as a heating rate. It doesn't reveal this feature. Suppose I do char using one of these techniques, using isothermal charring and these temperatures? Please comment.

A. We have yet to study the different atmospheres, and I had said that we have yet to study at steam, and other atmospheres. I suppose I just forgot to tell you that we haven't studied at isothermal conditions. It is not that our research is over; we are still doing it. We are going to study isothermal conditions also.

Q. Why are you concentrating on just steam gasification?

A. We can have any atmosphere other than steam, and carbon dioxide for gasification purposes.

Q. You have said that in your gasifier, biomass material and air both come from the same opening at the top. How do you feed the biomass into it?

A. We feed it manually.

Q. Continuously?

A. Yes.

Q. What is the periodic interval which you feed the biomass?

A. Every 5 to 10 minutes. We have already designed a small hopper which will be connected to the engine in order to feed it according to that rate, periodically, and automatically.

Q. How do you ignite the biomass material?

A. We start it with a small amount of wood, put a burning cloth in, start the blower, and it starts.

Q. The length of the tube, you mentioned, was 2.5 m.

A. No, it is around 70 cm. We might reduce it further, to almost zero.

Q. Because sugarcane is a very seasonal byproduct, how long will you be able to use it for the gasifier? The farmer may need some alternate energy resources. The gasifier should be set so that various biomass products could be used, at various points in time.

A. Yes, up to now, all of our technology and experience has come from the second world war. This technology consists of an extremely fuel-specific and engine-specific gasifier. I think the system that we have now, which is a throatless system, may be ameanable to use with various biomass. We have tried the sugarcane leaves very successfully. We have had partial success with 60% sugarcane leaves and 40% wood. But after an hour and a half we have had some choking of the bed; we are trying to remedy that. Because sugarcane leaves are very dry, they can be stored for long periods; that could be very beneficial to the farmers.

Q. Could you use pre-briquetted sugarcane leaves?

A. Yes. Actually, we almost set up a factory for briquetting sugarcane leaves. We tried to get the technology from overseas, but they had technology for gas only. We wanted to see if they could briquette sugarcane leaves, but they were not able to give a guarantee that it would work. I must add that within a matter of a month or two we will have put this on the canal, and then we will get a lot of field experience in that.

Q. Did you try to find out what the angle of internal friction is with the shorter leaves?

A. We found the angle to be 60°.

Q. What is the diameter for non-arching flow in the wind? What diameter are you using.

A. We are in the process of modelling, and right now we have a pretty good model. Because we have enough experience, we were able to come to an optimum. We have gone from 15 cm directly to 46 cm.

Q. Since the ash content is 1%, how does the clinker problem, and other problems compare? Also, what about efficiencies?

A. We have found that this tar-laden water is an excellent weed killer. We have a half acre plot of tomatoes which we are testing this on, but we do not have all the answers yet. It has 200 different components, and a few of the components are the same as in the existing weed killers.

Q. Do you think the farmers will accept this system?

A. As long as the farmer can keep getting diesel, it is difficult for me to think that a farmer will go through such trouble for maintenance. I will give you a simple example. We have taken a small village which was totally barren, I think around 130 acres of land, which a farmer was growing. It was full of wealth, but they did not have the means to pump water. Now they have a diesel pump set and every day the man goes to get diesel. His problem can be solved if I put in a gasifier. Instead of going to get diesel everyday, he will go once a week. He may be in the right frame of mind to accept the idea; this is just a hunch, but it might work.

C. In the morning session, Dr. Vimal said the limiting factors are social factors. There are pockets of miles and miles of land mass where, for the next 10 - 20 years, neither diesel nor any other technology will reach. We can afford the risk of lower efficiency, higher cost, and all that. It is on those points that we should make it a viable test.

H.S. Mukunda - IISC-Bangalore

C. I just wanted to let you know that we are also running our gasifier without any vibration. This becomes even more pronounced if you increase the power. At 2.6 kw we get a problem after four hours, but at higher kw we have no problem.

A. It is nice to know that. Thank you.

Q. What is the wood consumption you are getting, per kw?

A. We are getting about 1.1 kg per kw, or close to that; that is running it at about 2.5 kg per hour. We can run it for about 2½ hours with an 8 kg load.

Q. The engine has remained as it is -- no changes in compression ratio?

A. Yes, in the first 50 hours of running, due to the practical operation problems, but the point is there is no considerable reduction in performance.

Q. I find it interesting that you have carried out experiments on the measurement of the tar and the dust. What is the range that you have found with the various kinds of materials, and what are the materials you have tried?

A. We have used only a particular type of wood. We have't used any other wood yet, so I won't be able to say anything on performance on other kinds of wood. The numbers I have given have been for a long time average of about 100 hours.

Q. One other point that is common to all of the gasifier problems; the water which comes out after cleaning the cooling system is a very huge quantity. Its effect may not be a concern in some of your experiments, because you have a dry system. Could you tell us something about this dry system?

A. What you saw was a flat-plate heat exchanger. Let me show you this sketch. We decided that if you had to go to operating, generating, and so on, we wouldn't have a continuous source of water. Therefore, we should design something which was dry. This system is simply a plate that is 600 mm in length, 50 mm thick, and about 1.2 meters high. It could be best described as convective cooling which can be augmented with the following idea: We put a small cloth around it, dipping in water. Some amount of water goes up and cools the entire surface. The inlet temperature is about 350°C -- it varies from about 200-250°C -- and the outlet temperature is less than 45°C. It goes through the filter, here, which reduces it here to about 40°C. The entire gasifier is made of about 8 mm thick stainless steel. It is very important to make it out of stainless steel because corosion can be a very serious problem. Some amount will produce products like formic

acids, which will come and deposit, and cause corosion. Other than that there really isn't much more to say about it.

Q. Doesn't the water get heated over the course of time?

A. Even after 20 hours of operation it doesn't happen, there is a very simple solution. There is a very small drain where we can pour water into this about once every two or three hours, it doesn't make a significant impact.

Q. The cost seems very reasonable at about 1000 rupees per 5 kw. Please tell us something more about the operational cost?

A. The operational cost is near zero because of depreciation and other noncash deduction. This particular system is designed to run completely on wood gas, between an average of 60 and 65% of the normal level, which is stated at 2.2 to 3.2 kw. This is the kind of power which it is designed to provide. Most of this is contracted out. These costs are not inhouse fabrica- tion costs. The gasifier is contracted, so are most of the elements. Of the two units which we have made, this one for 10,000 rupees includes a 15% the profit for the man who makes it.

Q. But on a commercial scale, won't the price come down?

A. The point is that when one is costing raw material, there are many variations that are possible. The man who uses it may have his own form. In this case, it is zero cost.

C. We have talked quite a bit about gasification on one end, and utilization of coal on the other end. There are two problems that concern the area where I work. We don't have the traditional coal, but we do have lignite. What is feasible for utilizing lignite in what may be called a commercially exploitable state or it might be in smaller requirements. The second is there are a lot of problems in gasification; there is tar, and there are engine problems. As a mechanical engineer, unfortunately I did my specialization from Michigan in internal combustion, but I still have some sort of an idea what an engine is. The possiblity of using a turbine in a closed circuit, I am only fantasizing how it can be put into use, has to be worked out. There can be fluid which can be heated by any means. You can use solar, biogas, or flue gases from the burning of biomass. Power which can be between 15 to 25 kw which, I presume, is adequate to meet the rural demand on a noncentralized basis. I would very much like to see if some work could be taken up on those lines.

A. There have been four points made: The first point is the use of lignite as a commercial exploitation. The second is the problem of tar and other engine problems. The third is why isn't it in a close circuit itself? We are already looking for the resources to be exploited, so we welcome this proposal. Any feasible project proposal you would like DNES to consider, we would welcome it. We would like to take them up. The presentation that Dr. Parikh gave was a good overview of these three aspects. She raised the fundamental point: What is tar? We have to define that part. The second part is the different methods of estimating the tar because some are very complex, and some are very simple, so we have to utilize a method that is so simple that it can be an integral part of the complete system wherever there is gasification work. Also, about the engine problem, Dr. Mathur and Dr. Parikh also have given a good overview. The quantity and quality of a gas into the engine has to be properly monitored. The beauty of this program is that it is a very well conceived program because there are three component parts to it. One is about the processing of the biomass to get a consistent quality producer gas that is to be fed into the engine system. But again, I think we should go back to what the requirements of a good engine are and how this quality of gas should be produced. One other point which has been raised is this gasifier system is very selective as far as the biomass is concerned. The physical and chemical characteristics of the biomass has to be determined in a very analytical way. This is the first part of the project; the second part is the engine system, and the third part would be the extension. That is the demonstration and one component cannot be overlooked. So, what we have been emphasizing again and again is the interlinking of these three components. In its practical way, good work has been done, and I will complement the US team which has been able to bring the complete vision of this whole program. I think it has been a very well conceived program. The workshops have been able to highlight and bring the type of awareness

that we want. I think by the next workshop we will be able to coordinate the efforts of all three groups in such a way that we develop a good delivery system. Already in addition to this program, here at a national level also, we have initiated about seven or eight projects in an other program which have been characterized by the efforts of last year. Now we are going one step further, to production activities in this area so that many private firms are taking an interest in the commercial manufacturer of these gasifiers. In phase of the program we may have to plan for better coordination between the private sector. The problem of tar and other Indian problems have been very well taken care of in our discussions. We are now taking very concrete steps, as I discussed with Mr. Dayal, and each component we will have to taken as a separate project and then thrashed out. For example, the tar problem, the soot, the cooling system, or cleaning system; each has to be taken up in a separate way and discussions need to be organized. The third aspect of running a closed system, DNES is open to ideas. As you know, DNES is committed to seeing that any idea which is really worthwhile matures. So any one who has a proposal, you are welcome to contact DNES and we will see that any such proposal gets good footing on the ground.

A. Regarding the use of lignite, there is already a planning commission group working on identification of where there are pockets of lignites available in several areas. The problem is they are available in small quantities in many places. Still, they have not decided to what extent it is exploitable. Regarding the lignite we have tested in our fluidized combustion boiler, we have presented papers in other sessions. If we eliminate the small deposits, and even if we can put a 10, 15, 30 MW station which can be fueled for 25-30 years, it is feasible. As far as technology of the combustion of lignite, down to the calorific value of 1800, 1900 kilocalories, it is possible, and we have done that. It is only a question of coming up with a concrete commercial proposal which the electricity board will be to undertake.

C. From the session on the biomass gasifier, one thing was very clear. The gasifier, right from the biomass itself, needs a systematic and thorough analysis, rather than having it at sporadic centers. Having come up with some results, we should have some viable model which would reach the users. For that purpose, I suggest that we have a coordinated project on gasifier systems, identifying certain viable centers whose specific tasks are well defined. This type of work will be very useful so that we get something in a very short time.

A. I do appreciate the idea. I think that the type of discussion that we had this morning and afternoon has really convinced us that it is not a system that can be taken up in isolation, but an integrated view that has to be taken up. Not only that, but specific projects have to be given to some of the centers we work with and then integrate the information. We appreciate your idea of an integrated project on biomass gasification.

Q. Somebody asked me yesterday whether this workshop could be held in the US. Because you have had three in India, they asked if it is possible to have a workshop in the US. I would like to get DNES' and the audience's view on this. If we would be able to attract people from India who want to come to this workshop, would it be possible to have it in the US next year?

A. I personally think that we would have too limited an audience on the Indian side. That is my concern. This is the Indian program and if only a few could participate, it would not be worthwhile.

C. If the organizations can pay for the travel, and you can take care of the local hospitality, and internal travel, it may be possible that each organization would send a couple of representatives for discussions. If the money from AID for this workshop, particularly for travel, could be spent on local hospitality for the people coming from India, it would be much easier. The travel from India to New York and back, we can pay in Indian rupees because we won't have to pay the foreign exchange. For many organizations that may be a problem.

C. You make a good point. In the present program, 17 people will have visited the US extensively. They will go through a dozen or half a dozen laboratories. Perhaps, we may be able double that number of people, so there is an opportunity for maybe 30 people to visit individual laboratories of their preference. I think that would be possible. What do you think?

A. I agree with you on both aspects. Firstly, as you have stated, it would provide an opportunity for some of them to visit some of the places where there is activity. But Dr. Abbi has also pointed out that if we could work out a system by which this link could be developed by the various organizations, this proposition may be a feasible one.

C. Maybe we could think of both approaches on a small scale, and take advantage of both ways of doing it. We certainly shall consider this, if this is the feeling of the group. I think the training programs we have instituted has been very, very successful because people get to see many laboratories.

C. Additional exposure is always welcome because it is an education. I think it will help, but we have to see the other feasibility aspects.

Q. I see we have made considerable progress in many projects, but the original objectives have not been acheived. You said the whole program is ending June 30. What happens then? Are we supposed to continue on our own?

A. That is what it appears to be. It has to come to an end. All of the equipment promised to you will be delivered to you. As a matter of fact, we are adding to your laboratory. Your laboratory in the Hot Gas Cleanup

will get additional equipment.

Q. Will the program be monitored?

A. That is unknown at this time. Take a guess! We are trying to continue this effort but whoever manages it, well, that is to be decided by others.

C. At the present time, DNES and USAID are working very closely together to extend and expand the existing program considerably. It has not been finalized, but hopefully it will take place fairly soon. There may be a substantial expansion to this program, according to Maheshwar Dayal.

C. I would like to make a small suggestion. If the papers that were presented had been circulated earlier, it would have been more interesting.

A. That is always a difficult thing, but what we are offering instead, is the proceedings containing all the papers, the questions, and the responses that have been made. These will be out soon after we return home. So everyone who has attended this meeting will get a copy of the proceedings.

Q. We had been talking of integrated systems. It has been pointed out that charcoal in gasifiers may have been useful in many places. This is not a viable proposition. The success story given to us was our project and maybe one or two other places. Now, some of us who have been deep in biomass plantation, and biomass promotion work, have all of a sudden been harping on one operation and technical aspect. We can think of large scale biomass plantations and energy plantations. Think of metro plants. Charcoal is produced as a byproduct. Is it not time that you and me take off on a bigger and bolder project? For that purpose, for the few projects we have going on in some places, we would very much wish, request, and expect some feedback, or some other indication, that the project is continuing in this country. As an offshoot for your next term after June, could this be taken into account, not just gasifiers, but a total project where even the training could be taken care of?

A. At the outset, I do appreciate the initiative taken by US team to create the type of awareness this project should have. I do feel, and hope, that in some form or another, this project will be continued and the association that we have made will be examined. The proposal you made is already under consideration of the government.

C. Apart from the proceedings, could I suggest a panel of experts from different areas, sit together and review the presentations made during this workshop, and prepare a consolidated, very short, very concise report on the different technologies and their status worldwide.

A. That is an interesting point, and I think we should consider that.

C. If that is all, we shall close the session. I would like to thank all the session chairpeople who put a strong effort in making this a successful meeting. I thank you all. We'll see you in November 1986, God willing, for the fourth annual workshop. Dinner is at 7:30, right here.

C. On behalf of the government of India, thank you very much Dr. Bienstock, and his team for making this program a grand success in the country. I personally think this is a great idea -- this India and US collaboration -- and I expect that it will grow in time and both countries will profit by it.

APPENDIX 1: LIST OF ATTENDEES

Y. P. Abbi
Deputy General Manager
Bharat Heavy Electricals Ltd.
18-20 Kasturba Gandhi Marg
New Delhi, 110001
India

I. S. Anand
Deputy Chief (DGS)
REC Ltd.
DDA Building, Nehru Place
New Delhi, 100019
India

N. Anuradha
Department of Chemical Engineering
Indian Institute of Technology - Delhi
New Delhi, 100016
India

Paul Arikkat
Mechanical Engineering Department
Indian Institute of Technology
Bombay, 400076
India

S. Bajpai
Delhi Gliding Club
Safdarjung Airport
New Delhi,
India

Balasubramaniam
Vice President - Technical
Hindustan Brown Boveri, Ltd.
Baroda
Gujrat State,
India

Bibek Bandyopadhyay
DNES
CGO Complex, Block 14
Lodi Road
New Delhi, 110003
India

B. B. Bansal
Head, Heat, Power, Refrigeration
Engineering Division
Central Mech. Eng. Res. Inst.
Durgapur, 713209
India

T. J. Bhaduri
338 Aravali Apartments
Alaknanda (NCC)
New Delhi, 100019
India

A. K. Bhat
C-7/232 S. D. Area
New Delhi, 16
India

H. Bhatter
Solar Sciences Consultancy, Ltd.
29 Sadhna Enclave
New Delhi, 110017
India

A. G. Bhave
Research Engineer
Department of Mechanical Engineering
Indian Institute of Technology - Bombay
Bombay, 400076
India

Daniel Bienstock
U.S. Department of Energy
Pittsburgh Energy Technology Center
P.O. Box 10940
Pittsburgh, PA 15236
USA

G. S. Bindra
Bharat Heavy Electricals, Ltd.
Vikram Towers
16 Rajindra Place
New Delhi, 110008
India

S. K. Bose
Director
Coal India, Ltd.
10 Netaji Subhas Road
Calcutta 1,
India

M. Chakraborty
Central Fuel Research Institute
P.O. FRI
Dhanbad, 828108
India

A. K. Chakravarti
Central Fuel Research Institute
P.O. FRI
Dhanbad, 828108
India

Shankar Chakravarti
Coal R&D
Bharat Heavy Electricals, Ltd.
R&D Division
Vikas Nagar Hyderabad, 500593
India

S. Chandrasekaran
IPPD
Bharat Heavy Electricals, Ltd.
Tiruchirapalli
Tamil Nadu, 620014
India

P. Chaturvedi
General Secretary
Indian Association for the Advancement of Science
New Delhi,
India

V. K. Chaudhary
Commandant
Indo-Tibetan Border Police
Goverment of India
New Delhi,
India

Dipak B. R. Chaudhuri
Editor, URJA
P.O. 3008
G-82 Sujan Singh Park
New Delhi, 110003
India

A. B. Datte
C.M.E.R.I.
Durgapur-9,
India

D. Daugherty
Tennessee Valley Authority
1020 Chestnut Street
Chattanooga, TN 30401

Maheshwar Dayal
Secretary, DNES
Block No. 14, C.G.O. Complex
Lodi Road
New Delhi,
India

A. S. Dighe
Tata Electric Power
Bombay House
Bombay,
India

A. K. Drona
Department of Mechanical Engineering
College of Agricultural Engineering and Technology
Pant Nagar, 263145
India

M. B. Durgaprasad
Jyoti Solar Energy Institute
P.O. Box 20
Vallabh Vidyanagar, 388120
India

M. K. Dutta
The CESC Ldt.
Victoria House
Calcutta - 1,
India

Clarence Eich
Foster-Wheeler Corporation
110 S. Orange Avenue
Livingston, NJ 07039

R. R. Engineer
Industrial Boilers Pvt. Ltd.
79/80 Satkar
Nehru Place
New Delhi 19,
India

V. J. Flanigan
GROW
University of Missouri
221 Engineering Research Laboratory
Rolla, MO 65401

K. Gadgil
Center for Energy Studies
Indian Institute of Technology
Delhi, 110016
India

S. Gaur
Department of Chemical Engineering
Indian Institute of Technology
Hauz Khas
New Delhi, 110016
India

K. L. Goel
DNES
Block No. 14, C.G.O. Complex
Lodi Road
New Delhi,
India

M. W. Goklany
Chairman, Desein Private, Ltd.
Desein House
Greater Kailash 2
New Delhi, 110848
India

Raj Gopal
Westinghouse Nuclear Center
P.O. Box 355
Pittsburgh, PA 15230

Richard Grieve
Stone & Webster Engineering Corp.
Plant Services Dept.
245 Summer Street
Boston, MA 02107

R. Haque
Director
Central Fuel Research Institute
P.O. FRI
Dhanbad, Bihar, 834001
India

S. B. Hukkeri
Head, Agro-Energy Research Center
Indian Agricultural Research Institute
New Delhi,
India

M. Irani
41 Vernon Drive
Pittsburgh, PA 15228

P. V. R. Iyer
Indian Institute of Technology
Hauz Khas
New Delhi, 110016
India

B. Jagganna
DNES
Block M, C.G.O. Complex
Lodi Road
New Delhi 3,
India

S. K. Jain
101/2 Hospital Road
Jaiu 302001
Rajasthan,
India

S. P. Jaura
Honorary Exec. Vice Pres.
Indo-US Council
P.O. Box 4008
New Delhi, 110017
India

David J. Jhirad
Sr. Energy Advisor
USAID/Office of Energy
Washington, DC 20523

John Kadyszewski
Office of Energy
SA-18, Room 508
USAID
Washington, DC 20523

S. K. Kar
Transcon International
Gagantara Building
13 Camac Street, 2nd Floor
Calcutta, 700017
India

Radha P. Krishnan
Oak Ridge National Lab
P.O. Box Y
Building 9108, Mail Stop 1
Oak Ridge, TN 37830

A. S. Lamba
Deputy Manager
Bharat Heavy Electricals, Ltd.
18-20 Kasturba Gandhi Marg
New Delhi, 110001
India

B. E. Limzerwala
Jt. Chief Inspector of Steam Boilers
Government of Maharashtra
Bombay,
India

R. C. Maheshwari
CIAE
Bhopal
Madhya Pradesh,
India

K. M. V. Malarkkan
Bharat Heavy Electricals, Ltd.
Tiruchirapalli
Tamil Nadu, 620014
India

K. T. U. Malliah
GM/Industrial Power Products Div.
Bharat Heavy Electricals, Ltd.
Tiruchirapalli
Tamil Nadu, 620014
India

K. N. Mallick
Synthetic Fuel Pvt. Ltd.
75/C Kankerbag
Patna 20,
India

B. P. Mani
Department of Chemical Engineering
Indian Institute of Technology
Delhi,
India

S. C. Marathe
Burns & Roe, Inc.
800 Kinderkamak Road
Oradell, NJ 07649

A. N. Mathur
Research Engineer
Renewable Energy Scheme
CTAE Sukhadia University
Udaipur, Rajastan State, 313001
India

H. B. Mathur
Mechanical Engineering Department
Indian Institute of Technology
Hauz Khas
New Delhi, 100016
India

J. R. Meena
DNES
Block No. 14, CGO Complex
Lodi Road
New Delhi, 110003
India

M. C. Misra
FRAS
Itavnoa
Lucknow, U.P.,
India

P. Misra
Deputy Director
National Productivity Council
Lodi Road
New Dehli 3,
India

Ved Mitra
Principal Scientific Officer
DNES
Block No. 14, CGO Complex, Lodi Road
New Delhi, 110003
India

K. N. Nag
Vice Chancellor
Sukhadia University
Udaipur, Rajastan,
India

Padmanahman
Energy Specialist
USAID
American Embassy
New Delhi 21.,
India

K. Pal
Department of Mechanical Engineering
Indian Institute of Technology
Hauz Khas
New Delhi, 110016
India

M. S. Pancholi
Generating Station
Sabarmat, Ahmedabad
Gujarat State, 380005
India

J. D. Pandya
Tata Energy Research Institute
90 Jor Bagh
New Delhi, 110003
India

R. N. Pandya
Jyoti Solar Energy Institute
Vallabh Vidyanagar, 388120
India

P. P. Parikh
Indian Institute of Technology
Bombay, 400076
India

L. A. Patel
Manager, R&D
Gujarat Agro Industries Corp. Ltd.
Khet Udyhog Bhawan, Navrangpura
Ahemdabad, 380055
India

S. B. Patil
GEDA
B.N. Chambers, 3rd Floor
R.C. Dutt Road
Baroda, Gujarat State, 390005
India

S. Paul
Chief Executive
India House Development
134 G Palam Colony
New Delhi 45.,
India

K. D. Peterson
Int'l. Business Development Manager
Bechtel Power Corporation
12440 E. Imperial Highway
Norwalk, CA 90650

A. Powell
Coal Liquids
Plainview Point, Suite 100
10509 Timberwood Circle
Louisville, KY 40223

Om Prakash
Resident Representative
The Ahmedabad Electricity Co. Ltd.
34/16 West Patel Nagar
New Delhi, 110008
India

S. Rajaram
Bharat Heavy Electricals Ltd.
Energy Systems Group
Tiruchirapalli
Tamil Nadu, 620014
India

Anil K. Rajvanshi
Director, Energy Division
Nimbkar Agricultural Research Institute
Phaltan 415523
Dist. Satara, Maharashtra,
India

N. N. Ramakrishnan
Group Head, Coal R&D
Bharat Heavy Electricals Ltd.
Vikasnagar
Hyderabad, 500593
India

R. S. Rangan
Coal R&D
Bharat Heavy Electricals, Ltd.
Corporate R&D Division
Vikasnagar, Hyderabad, 500593
India

D. Subba Rao
Department of Chemical Engineering
Indian Institute of Technology
Hauz Khas
New Delhi, 110016
India

K. P. M. Rao
Hindustan Dorr-Oliver, Ltd.
Link Road, Chakala
Andheri (East)
Bombay, 400099
India

T. R. Rao
Dept. of Chemical Engineering
Indian Institute of Technology
Hauz Khas
New Delhi, 110016
India

T. R. K. Rao
Hindustan Dorr-Oliver
Dorr Oliver House
Chakala Andheri (East)
Bombay, 400099
India

A. Raza
DNES
Block No. 14, C.G.O. Complex
Lodi Road
New Delhi, 110003
India

B. K. Saha
Jt. Secretary
Advisory Board on Energy
Sardar Patel Bhavan
New Delhi, 110001
India

P. N. Sahagal
Head, Dept. of Chemical Engineering
Indian Institute of Technology
Hauz Khas
New Delhi, 110016
India

Jagdish K. Saluja
Viking Energy Corporation
Suite 203
121 N. Highland Avenue
Pittsburgh, PA 15206

S. Saluja
Deputy Secretary
DNES
Block No. 14, CGO Complex, Lodi Road
New Delhi, 110003
India

S. S. Sambi
Department of Chemical Engineering
Indian Institute of Technology
Hauz Khas
New Delhi, 110016
India

A. S. Sandhu
Bechtel Corporation
Engineers Constructors
50 Beale Street, P.O. Box 3965
San Francisco, CA 94119

M. K. Saraswat
Bengal Synpyrot
1/1 Vansittart Row
Calcutta, 700001
India

M. K. Sarkar
Department of Chemical Engineering
Indian Institute of Technology
Hauz Khas
New Delhi, 110016
India

P. Saxena
Sr. Scientific Officer
DNES
Block No. 14, CGO Complex, Lodi Road
New Delhi, 110003
India

P. Sengupta
Jt. Secretary
Advisory Board on Energy
Sardar Patel Bhavan
New Delhi, 110001
India

K. T. Shah
Tata Electric Power
Bombay House
Bombay, 400001
India

N. Shankar
Divisional Manager
Larsen & Toubro Ltd.
L&T House, Ballard Estate
Bombay, 400038
India

S. Shanmugam
Bharat Heavy Electricals, Ltd.
Tiruchirapalli
Tamil Nadu, 620014
India

Anil Sharma
121 CSIR
Rafi Marg
New Delhi, 110001
India

H. L. Sharma
Principal Scientific Officer
DNES
Block No. 14, CGO Complex, Lodi Road
New Delhi, 110003
India

P. V. L. N. Sharma
Energy Systems Group
Bharat Heavy Electricals, Ltd.
Tiruchirapalli
Tamil Nadu, 620014
India

R. D. Sharma
Jr. Analyst
DNES
Block No. 14, CGO Complex, Lodi Road
New Delhi, 110003
India

Nishant Shastri
F-1 Rajauri Garden
New Delhi 27,
India

V. N. Shenoy
V.P. AIEI & Managing Director
Hindustan Brown Boveri, Ltd.
Brown Boveri House, Race Course Rd., PB No. 284
Baroda, 390001
India

A. R. Shukla
DNES
Block No. 14, CGO Complex
Lodi Road
New Delhi, 110003
India

P. R. Shulka
Indian Institute of Management
Ahmedabad, 380015
India

M. Singh
Central Dairy Farm
Aligarh U.P.,
India

N. P. Singh
SSO-I
DNES
Block No. 14, CGO Complex, Lodi Rd.
New Delhi, 110003
India

K. R. Smith
East-West Center
Honolulu, HI 96484

M. K. Sridhar
Director Technical
BHEL Corporate Office
18-20 Kasturba Gandhi Marg
New Delhi, 110001
India

D. K. Srivastava
Synthetic Fuel Pvt. Ltd.
75-C Kankerbag
Patna 20,
India

V. K. Srivastava
Department of Chemical Engineering
Indian Institute of Engineering
New Delhi, 110016
India

S. N. Srivasthava
Jr. Commissioner (AI)
Department of Agriculture
Ministry of Agriculture
Krishi Bhavan, New Delhi,
India

James Sullivan
USAID
SA-18, Room 508
Washington, DC 20523

s. Sundararajan
Bharat Heavy Electricals
Tiruchirapalli
Tamil Nadu, 620014
India

Diana L. Swain
USAID
West Building
American Embassy
New Delhi, 110021
India

MANAGER
USAID
Site

K. R. Swaminathan
Head, Agro-Energy Department
College of Agricultural Engineering
Tamil Nadu Agricultural University
Coimbatore, 641003
India

V. M. K. Swamy
SICO, Ltd.
410 Pragati Towers
Rajindra Place
New Delhi, 110008
India

Abu Talib
Energy Resource & Environ. Sys. Div.
The Mitre Corporation
1820 Dolly Madison Blvd.
McLean, VA 22102

S. G. Tapaswi
Tata Consulting Engineers
414 Sawarkar Marg
Prabha Devi
Bombay, 400025
India

Krishan Tarneja
Westinghouse Electric Corporation
Lodi Hotel
New Delhi,
India

S. Umamaheswaran
Deputy Manager
Bharat Heavy Electricals, Ltd.
Tiruchirappalli
Tamil Nadu, 620014
India

R. Vaidyeswaran
Deputy Director
Regional Research Laboratory
Hyderabad, 500009
India

S. Varadarajan
Director General
Council of Scientific & Industrial Research
Rafi Marg
New Delhi, 110001
India

R. Vasudevan
GM/Specialist, Energy Systems Group
Bharat Heavy Electricals, Ltd.
Tiruchirapalli
Tamil Nadu, 620014
India

O. P. Vimal
DNES
Block No. 14, CGO Complex
Lodi Road
New Delhi, 110003
India

G. Viswanathan
Bharat Heavy Electricals, Ltd.
Energy Systems Group
Tiruchirapalli
Tamil Nadu, 620014
India

Jerome Weingart
Renewable Energy Technology & Policy
200 Center Street
Suite 418
Berkely, CA 94704

P. J. Zachariah
Technical Advisor
Eicher Goodearch Ltd.
Plot No. 8, Sector 4
Ballabyarh, Haryana, 121004
India