GPO ARW-611 17
93630 10
LW = 52812

EVALUATION OF INTERNATIONAL PHOTOVOLTAIC PROJECTS

-INTERIM REPORT-

OCTOBER 1985

Prepared for:

SANDIA NATIONAL LABORATORIES
Albuquerque, NM
Under Subcontract No. 21-3488

Prepared by:

MERIDIAN CORPORATION
Falls Church, VA

This report was prepared as an account of work sponsored by an agency of the United States Government. Neither the United States Government nor any agency thereof, nor any of their employees, nor any of their contractors, subcontractors, or their employees, makes any warranty, express or implied, or assumes any legal liability or responsibility for the accuracy, completeness, or usefulness of any information, apparatus, product, or process disclosed, or represents that its use would not infringe privately owned rights. Reference herein to any specific commercial product, process, or service by trade name, trademark, manufacturer, or otherwise, does not necessarily constitute or imply its endorsement, recommendation, or favoring by the United States Government, any agency thereof or any of their contractors or subcontractors. The views and opinions expressed herein do not necessarily state or reflect those of the United States Government, any agency thereof or any of their contractors or subcontractors.

FOREWORD

This draft report presents the findings of an evaluation of stand-alone photovoltaic (PV) projects that have been installed in developing countries over the past several years. Key technical, institutional and financial factors that impact the performance of these systems have been determined. A set of application criteria are proposed for each of the following PV applications: pumping, agri-processing, communications, refrigeration, lighting, and village electrification.

This draft is intended to serve as a basis for a round table meeting of project participants, to take place in November 1985 in Washington, D.C. The objectives of the meeting are to: (1) review and verify the results presented in the draft report; (2) obtain recommendations on the application of PV in the developing world; and (3) discuss the future of PV in terms of technological breakthroughs, economics and market acceptance. Following the round table meeting, a final report will be developed to incorporate comments and suggested revisions.

TABLE OF CONTENTS

EXECUTIVE SUMMARY

1.0 INTRODUCTION
1.1 Background..... 1-1
1.2 Purpose and Objectives..... 1-2
1.3 Approach..... 1-3
1.4 Project Evaluation Criteria..... 1-5
1.5 PV Project Experience..... 1-6
1.6 Report Structure..... 1-7

2.0 PUMPING
2.1 Application Description..... 2-3
2.2 Current Designs and Costs..... 2-6
2.3 Comparative Costs..... 2-9
2.4 Key Factors..... 2-13
2.5 Review and Significant Projects..... 2-19
2.6 Pumping References..... 2-27

3.0 AGRICULTURAL PRODUCT PROCESSING
3.1 Application Description..... 3-3
3.2 Current Designs and Costs..... 3-5
3.3 Comparative Costs..... 3-8
3.4 Key Factors..... 3-11
3.5 Review of Significant Projects..... 3-14
3.6 Agri-Processing References..... 3-16

4.0 COMMUNICATIONS
4.1 Application Description..... 4-2
4.2 Current Designs and Costs..... 4-5
4.3 Comparative Costs..... 4-6
4.4 Key Factors..... 4-9
4.5 Review of Significant Projects..... 4-11
4.6 Communications References..... 4-16

5.0 REFRIGERATION AND MEDICAL SYSTEMS
5.1 Application Description..... 5-3
5.2 Current Designs and Costs..... 5-5
5.3 Comparative Costs..... 5-11
5.4 Key Factors..... 5-14
5.5 Review of Significant Projects..... 5-17
5.6 Refrigeration and Medical System References..... 5-26

6.0 LIGHTING
6.1 Application Description..... 6-3
6.2 Current Designs and Costs..... 6-5
6.3 Comparative Costs..... 6-7
6.4 Key Factors..... 6-11
6.5 Review of Significant Projects..... 6-13
6.6 Lighting References..... 6-20

7.0 VILLAGE ELECTRIFICATION
7.1 Application Description..... 7-2
7.2 Current Designs and Costs..... 7-4
7.3 Comparative Costs..... 7-6
7.4 Key Factors..... 7-8
7.5 Review of Significant Projects..... 7-11
7.6 Village Electrification References..... 7-17

APPENDIX A: Summary of Questionnaire Responses
APPENDIX B: Other Bibliographic Sources

EXECUTIVE SUMMARY

INTRODUCTION

BACKGROUND

Photovoltaic (PV) systems have been installed in developing countries over the past 10 years to supply power for communications, lighting, refrigeration, water pumping and other basic development needs. During this period, a number of projects and development programs have been undertaken to demonstrate and evaluate the viability of photovoltaic systems as a remote energy technology option for developing country applications.

This draft report presents the overall findings associated with these systems. In addition, a set of definitive applications criteria is proposed for the use of photovoltaics in developing countries as a remote energy technology for pumping, agri-processing, communications, medical refrigeration, lighting and village electrification. This evaluation is based on a review of the experience associated with over 450 systems in 35 countries (a partial listing of these systems is included in Appendix A). Information has been collected from published reports and articles, questionnaires, and interviews with key experts around the world who have had significant developing country experience in the application of photovoltaics. Site visits were not within the scope of this evaluation.

This work has been performed for Sandia National Laboratories (SNLA), located in Albuquerque, New Mexico, and has been supported by the U.S. Agency for International Development (USAID) and the U.S. Department of Energy (USDOE).

The report has been prepared by Meridian Corporation with the sub-contracted support of IT Power, Inc., who performed a specific evaluation of PV-powered refrigeration systems.

APPROACH

The overall study approach consists of four primary activities. First, the technical, institutional and financial performance experiences gained from the operation of photovoltaic systems in developing countries were summarized. Key factors that may impact the performance of PV systems were determined from this summary. Next, current designs and costs were obtained, since past projects may not accurately represent current technology. Then, comparative analyses of conventional energy sources were performed. Lastly, the viability of PV for the reviewed applications was considered, and a set of application criteria was proposed. These criteria specify conditions, based on life-cycle costs in developing countries that indicate when PV will be a viable option costs compared with conventional energy technologies. A life-cycle cost approach was chosen to account for technical performance over the life of each alternative system.

The applications chosen for review in the initial phase of this study were selected based on the number of systems installed, the amount of performance data available, and their likely potential for financial viability. Particular attention was given to water pumping and agricultural product processing applications because they represent "productive end-uses" of energy. That is, they produce a quantifiable product with potential commercial value. Project experience was evaluated, and key factors were determined for each application. These factors are the technical, institutional, and financial factors that are most likely to have an impact on the reliable and cost-effective operation of a system. The viability of PV for all applications was considered compared to the costs of conventional energy sources (e.g., diesel generators and kerosene).

DATA COLLECTION RESULTS

Project experience was obtained from three principal sources: reports and articles; interviews; and questionnaires. Project reports by NASA-Lewis

Research Center (NASA-LeRC) were particularly important to the evaluation of refrigeration, grain grinding, and village electrification applications. The 1983 UNDP/World Bank report on small-scale solar-powered pumping systems provided a substantial amount of background information to the PV pumping evaluation. Also, a publication by Intermediate Technology Power, Ltd. (IT Power), in association with Sir William Halcrow and Partners, Handbook on Solar Water Pumping, was a principal reference. Significant interviews were conducted with: Anthony Ratajczak and Richard DeLombard of NASA-LeRC; Terrence Hart, N'To Diarra, and Richard Campbell for their experience at the Mali Solar Energy Laboratory; Bernard McNelis and Anthony Derrick of IT Power; and Douglas Danley of Science Applications International Corporation and Richard McGowan of Associates in Rural Development for their independently-conducted work in Botswana.

Questionnaire responses emphasized positive and negative aspects of each application. Approximately 30 responses were detailed enough to provide valuable comments (these comments are tabulated in the applications sections of this report). Particularly pertinent information was obtained from Papua New Guinea, Belize, Ecuador, and several international manufacturers and dealers of PV and PV-related equipment. Exhibit E-1 indicates the volume of system experience represented in this report.

EXHIBIT E-1 PV SYSTEMS EXPERIENCE

(Reports, Questionnaires, Interviews)

	Number of Systems	Number of Countries
Pumping	> 140	8
Agri-Processing	1	1
Communications	40	6
Village Electrification	>1000[b]	10
Refrigeration	178	38
Lighting	> 77[a]	11

a) Does not include system experience in Papua New Guinea (PNG) because no numbers were provided.

b) Includes 22 household systems in Zaire and more than 1000 systems in French Polynesia.

OVERALL TECHNICAL, INSTITUTIONAL AND FINANCIAL FINDINGS

The evaluation of photovoltaic systems in each application area indicated a number of significant common findings. These common findings were that compared to conventional energy sources, photovoltaic systems provide power more reliably and offer the least-cost alternative for small, continuous, loads.

TECHNICAL

Photovoltaic Arrays

The evaluation of photovoltaic arrays considered the reliability and performance of photovoltaic modules and array wiring. Overall, experience was reported across all applications that the arrays are highly reliable. Data collected by NASA Lewis Research Center on 58 systems installed worldwide between 1979 and 1984 (totalling 77.1 kW and representing 735 system-months of operating history) confirm the overall reliability of arrays. Questionnaire responses consistently support this field experience.

Available reliability data have not been sufficient to distinguish whether the primary cause of array failures have been module failures or array wiring failures. However, questionnaire responses have indicated that since the modules appear to perform within manufacturers' specifications, attention should be directed towards improving the ability of array wiring to withstand extreme moisture conditions.

Power Conditioning Equipment

Comments from the questionnaires support the fact that early systems (1975-1982) had problems with power controllers. Since that time, improved and lower-cost equipment has been used successfully throughout the world. Neverthe-

less, the critical importance of voltage regulators, battery charge controllers, and maximum-power-tracking electronics requires that these components receive careful examination. These components should be chosen based on their demonstrated field experience and the availability and cost of replacement parts. Therefore, power conditioning equipment performance has been designated as a key factor in PV system applications.

End-Use Devices

The performance of pumps, refrigerators, lights, and other end-use devices has been the most common source of problems in PV-powered systems. Many of the problems have related to quality control and improper application and/or misuse, rather than serious design flaws. Also, failures have rarely been related to PV as a power source, but they reflect generic operating experience with the load equipment under developing country conditions. Over the last three years, new products with better performance and durability have become available. Proper selection and support of these load devices enables quality systems to be obtained in all application areas.

INSTITUTIONAL

There are two overriding institutional factors in the application of PV in developing countries:

(1) Technical expertise in the specification and application of systems,

(2) Management of technical support and procurement of spare parts for operating systems.

Technical expertise and, more generally, application experience with PV systems in a particular country, is the most important institutional factor relative to the viability of photovoltaic applications in developing countries. For example, pumping and refrigeration systems, more than any other applications, require knowledge of available equipment, its field performance record, and the characte · of the solar resource and the load. PV, unlike diesel or kerosene

energy sources, is site- and load-dependent. Project experience shows that few developing countries have the experience to perform resource and load assessments, write system specifications, issue tenders and make component or system choices. These activities should be performed by in-country engineering personnel since they will have the most direct access to the best information relative to the site and operating environment of a system. These institutional barriers are being resolved as technical assistance and training are provided in-country personnel to assist their management of an increasing number of installed systems.

The management of technical support and procurement of spare parts is important for the long-term reliable operation of a PV system. Although PV systems require less support than other remote power technologies, responsive technical assistance with correct replacement parts is vital to any significant application of PV in developing countries.

FINANCIAL

Current designs of PV systems in each application were compared with a conventional alternative to determine the least-cost solution. For a given financing rate and term, the comparison considered the average capital cost and annual operation and maintenance cost. The results of the comparison were used to identify when PV systems provided a viable, least-cost, application. Overall PV systems were found to provide the least-cost alternative for low loads in each application. Results of each comparison are shown in Exhibit E-2.

Current PV pumping systems compared with diesel systems, showed that PV systems provide the least-cost alternative at loads below 1400 m4, delivering water at a cost of $0.006/m4. Current PV agricultural processing systems compared with diesel systems, showed that PV systems provide the least-cost alternative at loads below 2.0 kWh/day, processing grain at a cost of $1.10/kg. Current PV

EXHIBIT E-2 Comparison of PV Systems and Conventional Alternatives

APPLI-CATION	PHOTOVOLTAIC SYSTEM Capital Cost ($/Wp)	Annual O & M Cost	Least-Cost Alternative Load	Cost	CONVENTIONAL SYSTEM Capital Cost	Annual O&M Cost	Fuel Type and Cost	FINANCING Rate (Pct)	Term (Yrs)
Pumping	$12	$ 80	1400 m4	$0.006/ m4	$1200/ kW	$400[1]	Diesel $3.00/gal	10	20
Agricul. Process.	$17	$200	2.5 kWh/day	$1.10/ kg	$1800/ kW	$300[1]	Diesel $3.00/gal	10	20
Communi-cations	$11	$100	2.5 kWh/day	$1.00/ kWh	$1200/ kW	$200[1]	Diesel $3.00/gal	10	20
Refrig-eration	$11	$150	16,000 doses	$0.05/ dose	$ 400 each	$853[2]	Kerosene $1.67/gal	10	15
Lighting	$16	$ 15	1000 lumens	$0.13/ lumen	$ 50 each	$175[2]	Kerosene $1.67/gal	10	5
Village Elect.	$15	$ 60	2.5 kWh/day	$1.50/ kWh	$1200/ kWh	$400[1]	Diesel $3.00/gal	10	10

1. Exclusive of fuel and labor costs.
2. Includes fuel costs, but not labor costs.

communications systems compared with diesel systems, showed that PV systems offer the least-cost alternative for loads below 2.5 kWh/day, delivering power at $1.00/kWh. Current PV refrigerators compared with kerosene units, showed that PV systems offer the least-cost alternative for more than 16,000 annual doses, supplying vaccines at $0.05/dose. Current PV lighting systems compared with kerosene units, showed that PV systems offer the least-cost alternative for loads below 1000 lumens, delivering lighting at a cost of $0.13/lumen. Current PV village electrification systems compared with diesel systems, showed that PV systems offer the least-cost alternative for loads below 2.5 kWh/day, delivering power at $1.50/kWh.

APPLICATION KEY FACTORS AND FINDINGS

Based on the information collected from the reviewed projects, key performance factors have been identified. These factors are specific to each application. They are the technical, institutional and financial factors most likely to negatively impact the application of PV in developing countries. In addition, findings on the viability of PV in each application area were obtained. These are summarized for each application and form the basic input to the proposed application criteria provided in the concluding part of this summary.

PUMPING

PV-powered pumping is likely to be less costly than diesel-powered pumping for applications that have a volume-head product (the volume of water to be pumped times the vertical distance it must be raised) less than 1000 m^4. In some locations and under certain conditions, PV has been shown to be the least-cost technology up to equivalent energy demands of 3000 m^4.

This conclusion shows a much higher range of applicability for PV pumping than previous studies have indicated. For example, PV pumping experts agree that the findings of the UNDP/World Bank report of June 1983, Small Scale Solar-Powered Pumping Systems, by Sir William Halcrow and Partners in association with IT Power, Ltd., are now conservative. That report stated that PV pumping systems were viable up to hydraulic energy demands equivalent to 250 m^4 for rural water supply and up to 150 m^4 for irrigation applications.

EXHIBIT E-3 Key Factors for Pumping

1. The performance of subsystems (pumps, motors, and power conditioning equipment) will most likely have an impact on the reliable operation of the system.

2. The availability and proper use of accurate solar and water resource data is vital to achieving predicted successful performance.

3. The involvement of the end-user and the availability of technical support is necessary for the acceptance and success of these systems.

4. Financing is a significant impediment to the application of pumping systems in developing countries.

AGRICULTURAL PRODUCT PROCESSING

The use of PV as a remote power source for agri-processing (i.e., grinding, cutting, drying, etc.) is technically and institutionally viable. Comparative analyses to diesel systems show that PV can be financially viable for regular energy demands of less than 6 kWh/day, where the agri-processing operation is carried out year-round in order to maximize the use of produced energy. This latter parameter may weigh a decision in favor of diesel or gasoline for most applications.

EXHIBIT E-4 Key Factors for Agri-Processing

1. Agri-processing equipment should be carefully selected to ensure product quality, production rate, and process efficiency.

2. The control systems must be simple and reliable.

3. Local management of the system and production facility is key to successful application.

4. The availability of technical support and replacement parts is vital to successful operation, especially during seasonal periods of peak demand.

5. The high capital costs of stand-alone PV power systems necessitate full use of available power. The continuous availability of feedstock is critical to least-cost operation.

COMMUNICATIONS

PV communications systems are technically, institutionally and financially viable for small one- and two-module systems and for larger remote telecommunication systems. PV is likely to be the least-cost energy source for single-system energy demands of less than 2.5 kWh/day and for remote commercial applications up to 10 kWh/day.

EXHIBIT E-5 Key Factors for Communications

1. The reliability of voltage regulators, battery charge controllers and related electronic components is less than PV array reliability.

2. Battery life influences the life-cycle cost significantly. Simple maintenance and an awareness of state-of-charge and electrolyte levels by the user are important.

3. Financing of systems where they are competitive with conventional remote power systems is the limiting factor for increasing the number of applications.

REFRIGERATION

There are no significant technical barriers to the application of PV refrigeration systems, if care is exercised in the sizing and selection of the equipment. Cost analysis work in The Gambia shows that PV and kerosene refrigerators are comparable in cost on an annualized basis. PV refrigerators, however, are more cost-effective because of their higher reliability. This results in more efficient use of vaccines and thus a lower cost/dose, taking into consideration vaccine program overhead costs. Since the refrigerator cost/dose is small compared with overhead cost/dose, use of the more efficient PV vaccine refrigerator is often justified.

EXHIBIT E-6 Key Factors for Refrigeration

1. The accuracy of array and battery sizing is the key technical factor.

2. Proper use of the system, and hence user training, has been determined to be important to system performance. Close coordination of applications with in-country health organizations is the principal means of dealing with this issue.

3. The cost-effectiveness of PV compared to kerosene refrigerators is most apparent when considering total cost/dose including program overhead.

LIGHTING

The application of PV for individual lighting needs is technically, institutionally and financially viable compared with kerosene lamps, which are widely used throughout the developing world. PV lighting systems are competitive with kerosene lamps when PV systems can be financed at 10% for 5 years and kerosene costs at the village level are $0.75/liter or more. In addition, PV lighting provides at least 5 times the quantity of light as does a typical kerosene lamp. Based on reports from Papua New Guinea (1980) and Zimbabwe (1984), paybacks on PV lighting systems range from 2 to 7 years.

EXHIBIT E-7 Key Factors for Lighting

1. The reliability and efficiency of the DC ballasts for fluorescent tube fixtures is an important factor in lighting systems.

2. The availability of spare parts, especially light bulbs or tubes, is vital to system operation.

3. The ability of consumers to secure financing for the purchase of individual lighting systems is a main impediment to the widespread use of PV lighting systems.

VILLAGE ELECTRIFICATION

The use of PV for village electrification using small individual systems appears to be completely viable. This statement is based, in particular, on the successful application of over 1000 systems in French Polynesia, policy decisions in Fiji, and more than 2000 systems in Spain representing approximately 1 MW of installed PV power.

EXHIBIT E-8 Key Factors for Village Electrification

1. Failures of power conditioning equipment (e.g., inverters in AC systems) have been significant.

2. The choice of small individual systems (30-1000 watts) versus larger centralized systems (primarily AC) appears to depend on the capability of institutional support.

3. Widespread use of PV for village electrification is most dependent on the comparative costs and availability of conventional remote energy sources (i.e., diesel, gasoline, kerosene, and primary batteries) and the full use of the available power.

Financial analysis comparisons with diesel systems show that for areas with good insolation levels and for diesel capital costs of $1500 or more, PV systems are competitive for average loads of up to 2.5 kWh/day.

APPLICATION CRITERIA

The costs of currently available PV systems for the applications evaluated were examined and compared with the conventional energy alternative. Diesel engines were the alternative for pumping, agri-processing, communications, and village electrification; kerosene refrigerators were the alternative for refrigeration; while kerosene lamps were the alternative for lighting. These cost analyses have been combined with the key technical and institutional factors to develop a set of specific applications criteria. The criteria, provided in Exhibit E-9, are intended to answer the basic question of whether PV should be considered as an energy source for a given energy demand.

These criteria are general and are intended to help developing country and donor agency personnel. They are provided for each major application area of PV and cover general technical, institutional, and financial considerations. If a considered application appears viable, it should be investigated by contacting industry, application experts and knowledgeable program/project personnel to perform a specific technical, institutional and financial analysis.

EXHIBIT E-9 Application Viability for PV in Developing Countries

APPLICATION	VIABILITY CRITERIA
PUMPING	• The volume of water to be pumped times the vertical distance it must be raised is less than 1000 m4 (for certain remote applications with good solar resources, energy demands up to 3000 m4 have been shown to be cost-competitive with diesel). • There is a high demand for water by the immediate user(s), and basic mechanical and electrical skills necessary for water pumping exist nearby, or can be contacted easily from the site. • Financing or funding is available to permit the capital cost of PV to be carried over at least 10 years.
AGRI-PROCESSING	• The daily energy demand is less than 6 kWh/day, and the average solar resource is at least 5 kWh/m^2-day. • There is a regular supply, year-round, of agricultural product to be processed. • There exists a local organization to manage and operate the agri-processing facility, and they can perform basic mechanical repairs. • The cost of diesel at the processing location is more than $0.80 per liter, and 10-year financing is available.
COMMUNICATIONS	• The daily energy demand is less than 2.5 kWh/day for single dedicated use systems or less than 10 kWh/day for remote commercial communication power needs. • Radio equipment has a proven record in the environment. • Financing is available for at least 5-year periods.
REFRIGERATION	• The solar resource is known to average at least 5 kWh/m^2-day throughout the year at an inclination equal to the latitude of the site. • There is an ongoing vaccination program that requires a "cold chain" for vaccines. • The cost of kerosene is more than $0.70/liter, and more than 10% of the vaccines are damaged over a program period because of the failure of (the) existing (kerosene) refrigerator(s) to maintain required temperatures.
LIGHTING	• The solar resource is equal to at least 5 kWh/m^2-day throughout the year at an inclination equal to the latitude of the site. • The existing demand for lighting is met by kerosene, and users are willing to pay more for better quality lighting. • The costs of kerosene at the village are at least $0.75/liter, usage is above 90 liters per year/family, and 5-year financing at 10% is available.
VILLAGE ELECTRIFICATION	• The solar resource is equal to at least 5 kWh/m2-day at an inclination equal to the latitude of the site, and total daily load is below 2.5 kWh/day. • Users are satisfied with individual power systems and are likely to accept limited energy use when required. • The capital costs for a small home diesel generator are above $1500 and the cost of diesel fuel is more than $0.40/liter. Financing at 10% for 10 years is available.

REMAINING WORK

The intent of this report is to summarize the status of study findings regarding key performance factors, current designs and costs, as well as comparing PV applications with conventional alternatives. A set of application viability criteria are also proposed to aid developing country and donor agency decision-makers. The next step in the study will be a review of study findings and proposed criteria by industry, applications experts and donor agency officials at a Round Table Meeting. Following the meeting, comments received will be incorporated into the final report.

SECTION 1.0

INTRODUCTION

1.1 BACKGROUND

In the past ten years, photovoltaic (PV) systems have been installed in developing countries for communications, lighting, refrigeration, water pumping, and other basic needs. Application projects and programs have been undertaken to test, evaluate and demonstrate the performance of PV as a remote energy technology for the developing world. Efforts have concentrated on evaluating the technical and institutional merits of photovoltaic systems. Principally, these projects have been sponsored by governments, donor agencies, and non-profit organizations. Today, partly as a result of this field "development" work, there are two basic perceptions about the viability of PV for remote energy supply: the first is that PV systems are reliable; the second is that they are too expensive. Both statements are correct, but only in given contexts. There are applications where PV has been observed to be technically and financially competitive with conventional remote power sources.

A strong demand exists for a comprehensive and objective evaluation of the viability of PV for various applications in developing countries. However, until now, no attempt had been made to systematically collect and analyze the performance data and experience associated with such systems. This report presents initial findings and conclusions of such an evaluation being conducted for Sandia National Laboratories, under the auspices of the U.S. Agency for International Development (USAID) and the U.S. Department of Energy (USDOE).

1.2 PURPOSE AND OBJECTIVES

The purpose of this study is to provide a clear indication of the viability of PV systems for various developing country applications.

This work has been based on achieving the following objectives:

- Collecting and evaluating PV project performance data and experience and identifying key technical, institutional, and financial factors that contribute to PV system performance.
- Obtaining current PV system technical and cost data for similar applications.
- Performing comparative cost analyses to conventional alternatives.
- Developing a set of criteria for the application of PV for developing countries.

1.3 APPROACH

This work began by considering the type of PV applications to be evaluated. The general criteria used to select the applications were the number of systems installed, the availability of data and the potential for economic viability. In this regard, special attention has been given to pumping and agricultural product processing because these are "productive end-uses," or those where the potential exists for generating income from products of the system in order to pay for the system. The comparative cost to conventional alternatives is used to determine the viability of PV for each application. Only PV stand-alone systems were considered. A "PV system" is defined to include the array, power conditioning components (controller, inverter, switches. etc.), storage (principally battery) and end-use devices such as a water pump, refrigerator, lights, radio, grain mill, etc.

The study is being conducted with the understanding that field performance data are limited and what little exist are of questionable accuracy. It is also understood that past projects are not completely representative of current system designs and costs, in that certain design and cost improvements may have been realized since system installation. Therefore, the study incorporates these design improvements and past field experience, in order to estimate current system performance.

Performance information has been collected from three principal sources: 1) project reports and articles; 2) end-users and/or participating in-country personnel; and 3) manufacturers and other key individuals. Questionnaires were sent to over 300 organizations and individuals with emphasis on obtaining field performance data and end-user perceptions about the viability of PV. From this information, key factors of performance have been established. Key factors are those technical, institutional, or financial aspects of a PV

application that are likely to have a negative impact on the reliable and cost-effective operation of a system. Based on past project experience, current system designs and costs for each of the major application areas were conceptualized as "point" designs. Lastly, criteria for application viability were established based on the comparative cost and performance of other remote energy energy technologies.

1.4 PROJECT EVALUATION CRITERIA

Projects have been evaluated on three basic performance factors: technical, institutional, and financial. PV systems are considered viable if they are more reliable, simpler to operate, and cheaper in life-cycle cost than the most common alternative. Exhibit 1-1 details these criteria.

EXHIBIT 1-1 PROJECT EVALUATION CRITERIA

RELIABLE PERFORMANCE (TECHNICAL)	SIMPLE OPERATION (INSTITUTIONAL)	COST COMPETITIVE (FINANCIAL)
• Operating reliability • Meets demand • Ease of operation, maintenance, and repair	• Demand exists for specific product/service • Operator skill level matches that required • Existence and performance of technical and administrative support	• Capital cost • O & M cost • Production • Life-cycle cost/benefit • Competitive with conventional technology cost/benefit

1.5 PV PROJECT EXPERIENCE

The experience associated with approximately 450 systems has been incorporated into this study. From these, 29 specific projects were selected for detailed review based on their representative nature, the amount of available data, or their importance to understanding the key factors of PV system performance in particular applications. Performance summaries and lessons learned for these projects are provided in this document. In some cases, a "project" consists of many similar systems (e.g., the NASA-Lewis refrigerator field tests total 29 systems, but they are treated as one project).

Project experience attests to the reliability and performance of PV to the extent it is a determining factor in the successful operation of a system. Degradation, delamination, corrosion, oxidation, module breakage, and dust accumulation have not posed significant problems, indicating that current modules have been improved. The reputation of PV in both reliability and performance under a variety of conditions is justified. The performance of the photovoltaic array, as a separate component of the systems, is not regarded as a key factor since it is unlikely to negatively affect system performance. By array performance, reference is made to the operating efficiency of the array over a range of insolation and temperature.

1.6 REPORT STRUCTURE

The remainder of this report is organized by each application under examination. Each chapter includes an application description, current designs and costs, comparative costs, key factors that impact system performance and the detailed reviews of specific projects. The appendix provides summary information regarding the questionnaires that have been received to date.

SECTION 2.0

PUMPING

Water is a basic development need for a large proportion of the world's rural population. The majority of this population lives in remote sunny areas with relatively shallow water resources. They need potable water for human and animal consumption and for irrigation. The development and application of photovoltaic water pumping systems have been supported by many donor agencies and governments as a technology with a strong potential for meeting these needs. A review of the experience with more than 140 pumping systems indicates that this potential is being realized.

Project experience has been reviewed to determine the key factors that most influence the performance, and ultimately the viability, of PV water pumping systems. The key technical factors have been found to be (1) the reliable performance of the subsystems, such as the power control units, regulators, pumps and motors and (2) the availability and proper use of accurate solar and water resource data. Historically, there have been very few PV module-related failures. Early systems exhibited some subsystem quality control problems, poor environmental protection, and some misapplication problems. Electronic and pump component design improvements have occurred in the last several years. Several field-proven systems are now available. The most significant technical factor is the quality of site-specific solar and water resource data. Individual systems have exhibited poor performance resulting from errors in these basic data. As experience with systems accrues in a country or region, solar and water resource information will be better understood.

The key institutional factors are the involvement of the end-user and the availability of technical support. The simplicity of PV and the standard technology of pumps has been shown to be easily understood by involved users

and host-country technical organizations. Institutional barriers are primarily a function of lack of experience. As such, they are being resolved as the number of systems installed in a country increases.

The most critical factor to the current application of PV for pumping systems is financing. The high capital costs of PV have been referenced in many questionnaires. Cost-competitive applications will need financing to permit realization.

The results of this review indicate that PV water pumping systems are reliable and likely to be cost-competitive to diesel for low-flow and low-head applications where the product of volume and head is less than 1000 m^4. However, project experience has indicated viability in certain locations where demand is as high as 3000 m^4. The major impediments to the widespread application of PV water pumping systems are awareness of the technology, application experience, and financing.

2.1 APPLICATION DESCRIPTION

A photovoltaic-powered water pumping system consists of three basic components: the PV array, which converts solar energy to electricity, the pump, and the drive motor. These components are designed to operate together to maximize the overall operating efficiency of the system. A controller is often used to regulate and condition power and to protect individual components. Energy storage, most commonly thought of in the form of batteries, is seldom considered for PV water pumping systems because of the losses in efficiency and higher system costs. Water storage is usually the best means of energy storage for periods of low insolation and high peak demands.

The design of a system and choice of components is determined as a function of the solar and water resource and the demand for water. In general, well depth and water demand determine pump and motor choice. Array size and power conditioning requirements follow from total energy demand, motor design, and solar resource. There are four basic types of pumping systems. They are depicted in Exhibit 2-1.

Photovoltaic water pumping systems like those depicted in Exhibit 2-1 have been developed and field-tested for the past 10 years. Estimates are that approximately 1200 are installed worldwide. A benchmark study was performed for the UNDP and World Bank on PV pumping systems from 1979 through 1982. The study [Ref. 1], which is reviewed in this report, concluded that PV pumping is cost-competitive to conventional fuels for low-flow and low-head conditions. Two important field-based demonstration projects in Mali and Botswana are to be concluded in 1985. These two projects represent over 6 years of field test experience with over 100 PV pumping systems. Final project reports on this work, expected in the fall of 1985, will provide more detailed findings and background. The Mali and Botswana experiences have been reviewed through interviews conducted

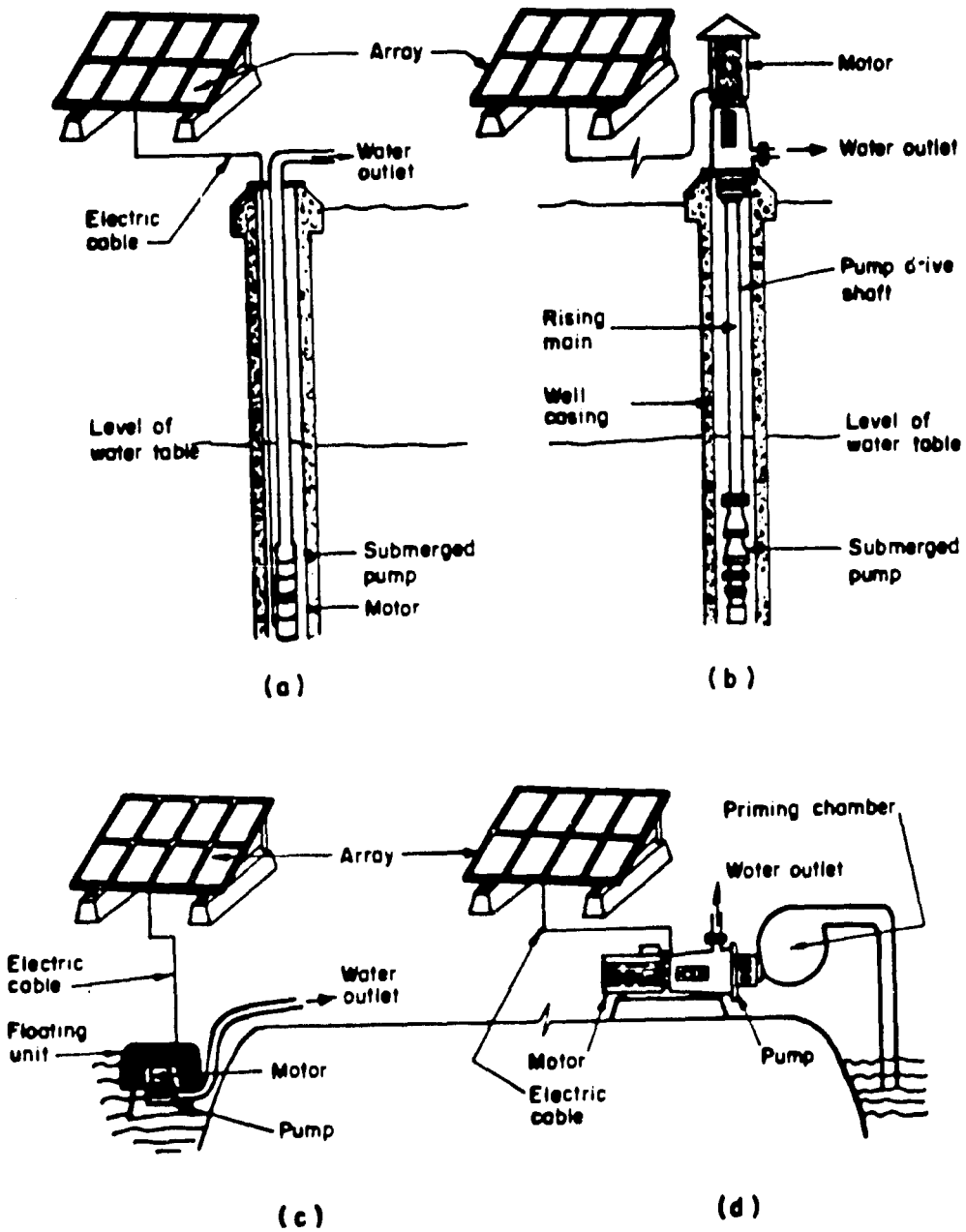

a. Submerged motor/pumps with centrifugal pumps, often consisting of several impellers and therefore termed "multi-stage."

b. A submerged pump with surface-mounted motor. Figure b shows a centrifugal pump, although this could equally be a positive displacement pump, in the form of a reciprocating piston pump or progressive cavity pump.

c. Floating motor/pump units with centrifugal pumps.

d. Surface mounted pumps with a self-priming tank. Positive displacement pumps have better self-priming characteristics than centrifugal pumps.

EXHIBIT 2-1 [Ref. 2]

with key engineering managers from these projects.

2.2 CURRENT DESIGNS AND COSTS

PV-powered pumping system technology has improved significantly since the extensive work by Sir William Halcrow & Partners and Intermediate Power Technology in 1983 [Ref. 3, 4]. Efforts have concentrated on simplifying components, increasing reliability and reducing costs. For many pumping applications, these endeavors have been quite successful.

Improved power conditioning has achieved better matching of the array and pump/motor operating characteristics. Battery use has been limited to only those installations where pumps require high surge currents to start. Experience, thus far, has shown that low-head applications are the most reliable and cost-effective applications of photovoltaic pumping systems. Some small pump systems have adopted DC brushless motors, either surface-mounted or floating, driving single-stage centrifugal pumps. The effort to develop larger, submersible DC brushless motors for larger-head applications has had limited success. Thus, for large-head applications, manufacturers have turned to synchronous AC motors driven by DC-to-AC inverters, achieving a very good record of reliability and performance.

The prices of PV pumping systems have dropped dramatically from about $30/Wp in 1978 to as low as $12/Wp for systems procured in Mali in 1983 [Ref. 5]. Exhibit 2-2 is a selection of PV pumping system specifications and costs that were obtained during the course of this study.

EXHIBIT 2-2 PV Pumping System Prices[1] [Ref. 6, 7, 8, 9]

Performance Requirement (volume head)	Pump/Motor Type	Array Size (Peak Watts)	Insolation (kWh/m/day)	Costs ($)	Costs ($/Wp)	Specific Capital Cost (SCC)[2]
230 m^3/day, 2 meters	Centrifugal, Single-Stage, DC Brushless	516	6	7100	13.7	1550
13 m^3/day, 3 meters	Centrifugal, Single-Stage, DC Brushless, Floating	85	6	1000	11.8	2612
76 m^3/day, 11 meters	Centrifugal, DC Motor Drive, Surface Mounted	770	5	9000	11.7	1097
70 m^3/day, 27 meters	Centrifugal, Multi-Stage, AC Submersible	1500	-	20000	13.3	1078
30 m^3/day, 65 meters	Centrifugal, Multi-Stage, AC Submersible	1500	-	20000	13.3	1045
25 m^3/day, 34 meters	Jackpump DC driven	800	-	11000	13.8	1318
				Average	12.9	1450

1. Based on system prices from 1983 to 1985.
2. Specific Capital Cost = (system cost)/(pqVH)

There are two useful parameters to consider when evaluating the cost of PV water pumping: (1) the high capital costs required for purchasing the system and (2) the life-cycle costs. The Handbook on Solar Water Pumping [Ref. 10] uses a Specific Capital Cost (SCC) value as an indication of the purchase costs and a Unit Water Cost (UWC) for the life-cycle cost of pumped water.

$$SCC = \frac{C}{\rho g V H}$$, where

C = installed cost of the system

ρ = density of water

g = gravitational constant

V = average volume of water pumped per day

H = average head

The SCC results in a cost per unit of hydraulic energy. It is dependent on the cost of the PV array, the insolation at the particular site, and the demand characteristics. It is a useful factor for comparing the capital costs at one site with another and for comparing PV against other power sources for pumping applications. In a similar manner, a UWC value ($\$/m^3$) can be produced as a function of insolation and assumed life-cycle cost parameters.

2.3 COMPARATIVE COSTS

The costs of PV-powered water pumping have been compared to diesel-powered water pumping for various loads and equipment costs (using a 10% discount rate and 0% inflation). Exhibit 2-3 details the parameters used to generate the curves in Exhibit 2-4.

Exhibit 2-4 can be used to determine actual water cost, in terms of $\$/m^3$, by multiplying the UWC ($\$/m^4$) by the head associated with the given application. The graphs show that beyond a hydraulic energy requirement (the volume-head product) of 600 m^4, the UWC for PV systems becomes independent of the load. At very low loads, both PV and diesel pumping costs rise because the financing costs must be recovered over a relatively smaller amount of delivered water. However, PV costs increase at a slower rate than diesel costs because PV, unlike diesels, can be procured in very small and specific power capacities.

It is apparent that at low hydraulic energy demands, below 800 m^4, the capital cost of both PV and diesel equipment is a determining factor in the choice between PV and diesel. Unfortunately, very little field data is available on the price of small diesel engines and pumps. Data collected during the course of this study in response to the questionnaires is provided in Exhibit 2-5. The table shows that there is a wide variation in diesel costs from one country to another. The lack of any diesel data on units less than 3 kW corresponds to the limited commercial availability of small-sized diesels.

Using cost assumptions of $1000 and $3000 (low and high, respectively) for diesel pumping systems and current PV system prices of $12/Wp, a cross-over between diesel and PV occurs at demands of approximately 1000 m^4. Below this demand level, PV will most likely be the least-cost technology. Above 1000 m^4 demand, diesel will most likely be the least-cost technology. It is important to note that independent, field-based, cost analyses of PV versus diesels performed

EXHIBIT 2-3 Cost and Performance Parameters for Pumping Systems

PV System

	Cost ($/Wp) Projected[1]	Average[2]	High[3]	Life (Years)	O&M[4] ($/Year)
PV Array	6	8	10	20	50
Pump/Motor[5]	2	3	4	7	30
Installation	1	1	1		
Total	9	12	15		

1. Target cost achievable within the next 2 years.
2. Based on no batteries, minimal instrumentation and no well contruction costs.
3. Based on small volume orders.
4. O&M is irrespective of labor.
5. 40% efficiency based on UNDP testing results ranging from 25% to 45%.

Diesel System [Ref. 11]

	Cost Low	High	Life (Years)	O&M[1] ($/Year) Low	High
2.5-kW Diesel[2] ($) (Incl. pump, diesel and installation)	1000	3000	7[3]	200	400
Fuel ($/gal)	1.50	3.00			

1. O&M is irrespecti of labor
2. Operating efficiency is 6% for low case and 9% for high case.
3. Life of the diesel and pump.

EXHIBIT 2-4

COMPARATIVE UNIT WATER COSTS

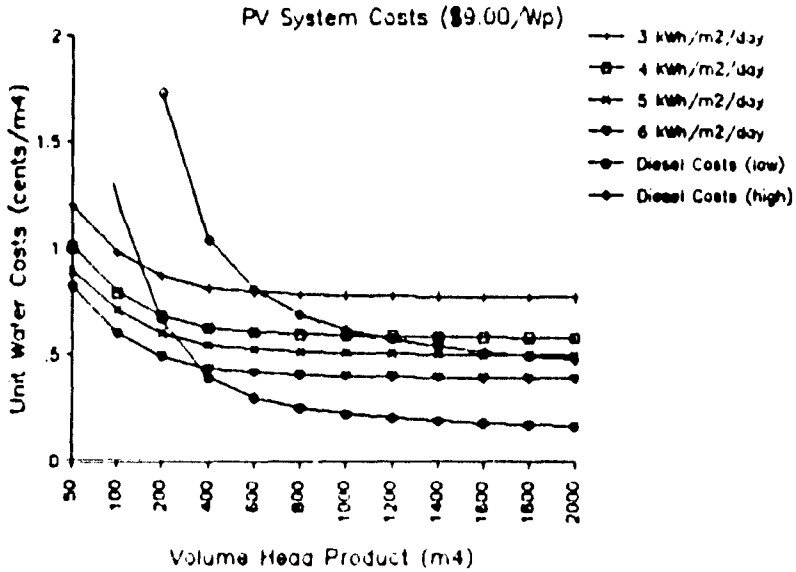

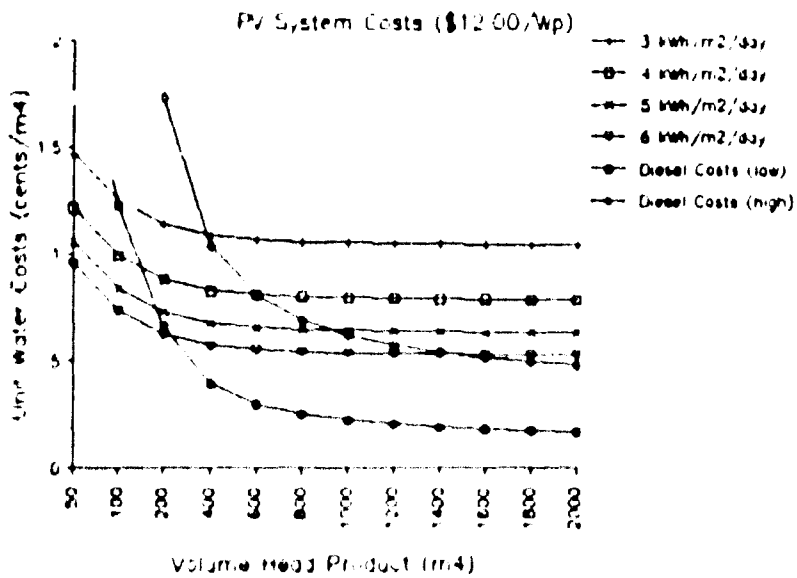

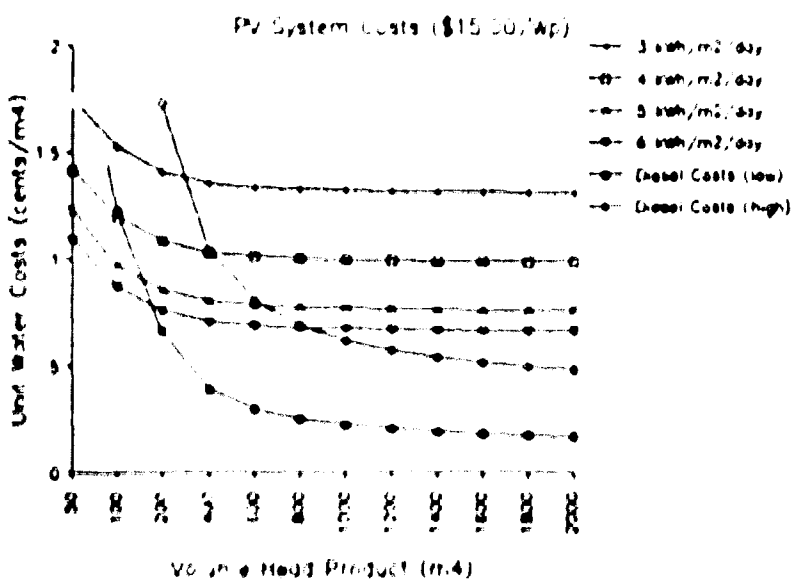

EXHIBIT 2-5 Diesel Engine Prices As Recieved From Questionnaires

Location	Capital Cost ($)	Size (kW)	Cost ($/kW)
Antigua	2960	7.5	395
Belize	5000	4	1250
Botswana	1170	3.4	344
Djibouti	1525	4	381
Lesotho	900	6	150
Lesotho	6000	20	300
Lesotho	2510	10	251
Senegal	1710	7.5	228
Zaire	3000	4	750
Zimbabwe	4700	7.5	627

by McGowan in Yemen [Ref. 12] and Danley in Botswana [Ref. 13], showed PV to be the least-cost pumping energy technology for demands of 2500 m^4 and 3000 m^4, respectively. These results serve to emphasize how parameters such as insolation, diesel engine costs, diesel fuel costs (including transportation charges), and maintenance and repair costs are highly country- and site-specific.

In summary, PV pumping is likely to be less costly than diesel-powered pumping when the hydraulic energy demand is below 1000 m^4. In some locations and under certain conditions, PV has been shown to be the least-cost technology up to equivalent energy demands of 3000 m^4.

2.4 KEY FACTORS

The performance of PV water pumping systems is dependent primarily on the reliable function of the equipment and the cost of the delivered water. Many PV-powered pumps have performed well in the field. Common to these systems has been the use of field-proven pumps, simple controls (if any), and the active involvement of the user. However, there have been many other PV pumping systems where problems have been experienced. Based on the experience with PV pumping systems over the past years, certain key technical, institutional and financial factors that are most likely to have a negative impact on the cost-effective operation of PV water pumping systems have emerged. They are as follows:

- Reliability and performance of subsystems, principally of the control electronics and pumps
- Solar and water resource character - determines ability to design a system to meet demand
- User participation and expectations
- Communications and management infrastructure to provide technical support and spare parts
- Cost and availability of conventional fuels or electricity

2.4.1 Reliability and Performance of Subsystems

Pumps and Motors

Although most pump/motors used in PV applications have been custom-designed to be used in conjunction with PV, these components have been the major source of failures. Bearings, seals, running dry, overloading, drive shaft vibration (submerged centrifugal or progressive cavity), impeller clogging, broken push rods, packings, and gland seals are the most common failures. Most can be attributed to any or all of the following:

- Insufficient well yield
- Quality control of the equipment or installation
- Misapplication of pump

These problems are not indicative of significant PV pumping technology problems. Rather, they are typical of standard pump operating experience [Ref. 14]. Field experience shows that with technical supervision during application and installation, pump/motor sets will generally perform to user satisfaction.

Actual performance, on the other hand, often has not met manufacturers' claims. In some cases, pump performances have been observed to be from 10 to 20 percent below manufacturers' pump curves, according to recent experience in Mali and Botswana [Ref. 15, 16]. The specific reason for this is not known at this time, but sources indicate it will be discussed in their documentation that is scheduled to be completed this fall. These performance findings are not unique to PV pumps and generally typify field performances of commercial pumps powered by conventional power sources.

Low-head centrifugal pumps (Exhibit 2-1 c or d) that are directly connected to the array have performed well. Jackpumps, on the other hand, require some form of power conditioning to match the array to the motor. Comments have been made that sophisticated electronics are too high of a reliability risk and too costly to warrant wide usage [Ref. 17]. However, an investigation by Danley [Ref. 18] showed that a maximum power tracker is economically justified on a life-cycle cost analysis using a positive displacement pump. Reliability data are, nevertheless, presently insufficient to draw any conclusions. Jackpumps and other positive displacement pumps such as gear-type or progressive cavity compete favorably on a technical basis with submersibles in deep-well applications because of high efficiencies.

The most significant technical development for PV pumping systems has been the development of high efficiency DC brushless motors. These motors use DC power direct from the array and have no maintenance associated with them since they have no brushes.

DC brushless motors are becoming more available (in larger sizes), reliable, and cost-competitive. DC brushless motors are electronically commutated and at least two manufacturers offer low-head, low-flow PV pumping systems (300 m^4 at $12 to 14 per Wp). The use of DC brushless pumps should continue to increase over time.

Two significiant factors contributing to common pump failures are overloading and "running dry." The first condition is caused by sediment in the water or other restrictions that increase the load on the motor. It has resulted in broken components, overheating, and motor burnout. Increasingly, manufacturers are providing overload and high temperature protection on pump motors.

Pumps that lose suction may overspeed or overheat. For directly coupled arrays and pumps, the highest demand generally occurs at solar noon. Well capacity must be capable of matching this regulated demand. Low water level protection is a method of protection against this condition; however, this feature has not been commonly offered with pumping systems. Accurate and PV-specific well yield tests should be performed where the systems are designed to operate near well peak yield rates. Protection against low water level should be considered.

2.4.2 Solar and Water Resource Character

Pump performance is heavily dependent on the character of the solar and water resources. The relation between solar insolation, the dynamic and static water levels of the well, and the water demand determines the cost and production of a pumping system. This cost is most often dictated by the required array size.

Array sizing is a function of accurate solar data. It represents a key factor in the viability of PV pumping systems. Erroneous estimates of insolation have resulted in underpowered or overpowered systems. This fact has caused some systems fail to meet the demand or to be excessively (and unnecessarily)

costly. Relative to PV system cost, solar and water resource evaluation is almost always justified.

Predicting the performance of a PV pumping system and evaluating manufacturers claims are difficult tasks. Performance claims are best evaluated against actual country-specific operating data. For example, in Mali, a considerable amount of PV pumping performance data has been collected that now serves as a performance data base to specify and evaluate systems.

2.4.3 User Participation and Expectations

The involvement of the end-user has proven to be an important factor in the maintenance, troubleshooting, and water management of the system. Feelings of ownership and responsibility are key to successful systems. "Experience shows that the more the local community can be involved in the installation and running of a system, the more committed it is likely to become to the project's success." [Ref. 19] The users expectations are also a key factor in the success or failure of a system. For example, the use of drip irrigation versus flood irrigation requires the user to adjust to new irrigation methods along with a new technology. The distinction between the two often is not understood by the user (the fact that water is dripping and not flooding is perceived to be a failure of the PV, not an alternate irrigation method). The effective management of PV energy requires the user to understand the limits of its supply. The use of pumped water for irrigation or village water supply is a socio-political issue for any installation.

2.4.4 Management and Communications Infrastructure

The ownership and organization of a new facility requires cooperation. Especially in communities with little history of "managing communal projects sufficient time should be allowed to work out a scheme that will assist the community to deal with issues of implementation and management." [Ref. 20]

It has been observed that PV pumping systems suffer under the same infrastructure problems as do other remote power technologies. Management of technical support and spare parts is the most key factor to successful continued operation of remote power systems. Under equally poor infrastructure, PV systems are most likely to be more reliable because of the small amount of maintenance required and the reliability of PV arrays [Ref. 21]. In the development and testing world in which PV pumping systems presently exist, the most reliable systems have been those placed under the responsibility and funding of renewable energy laboratories or universities.

Communications from site to technical support are crucial. Incorrect, inadequate and unresponsive technical support, resulting from poor communication between system suppliers and the user or field technicians has resulted in downtimes of more than one year.

2.4.5 Costs and Availability of Conventional Energy

PV pumping systems have been installed for two principal reasons: (1) testing and evaluation, and (2) the unavailability or the cost of competing energy. Most performance information is available on those systems used within labs or testing facilities where the cost-effectiveness of the system was not a key factor in the purchase decision. Funding in these cases was obtained from government sponsorship, grants or donations. Many other applications have occurred because PV was the least expensive option, within the user's life-cycle perspective or because the supply of fuels is unreliable. However, performance data does not exist on such systems as to the amount of water delivered under a certain range of conditions.

As stated earlier, final reports from Mali and Botswana are expected to be out in Fall 1985, and from these, performance predictions of pumping systems may be more accurately determined. At this time, a 15 percent performance reduction

estimate is proposed to be applied to estimating output of current systems under a specified set of conditions.

Financial comparisons of PV systems with diesel are understandably site-specific. In Botswana [Ref. 22], in areas with hydraulic energy requirements as high as 3000 m^4, PV has been evaluated to be the least-cost alternative. The study was based on field operating experience with diesel and PV pumping systems. In other circumstances, PV is the only reasonable power available, as in the Somalia famine relief refugee camps [Ref. 23].

Pertaining to comparative costs, a report by Sir William Halcrow and Partners [Ref. 24] states that "the important point is to recognise the true value of recurrent costs, the problems they impose on aid recipients and their impact on the success or failure of a project.... Solar energy may offer the best option provided that efficiently managed credit is available to defray the capital costs of this technology." A final important point is made pertaining to the impact of potentially lower future costs for PV systems. As the cost differentials between PV and other energy technologies decrease, the field experience of their social impacts will be an increasingly decisive aspect of technology appraisal.

There is general agreement that the UNDP/World Bank report of 1983 is now conservative in its range of economic viability for PV pumping. Estimates by Richard McGowan of Associates in Rural Development [Ref. 25] are that PV should be considered when demand is any amount less than 1000 m^4 (e.g., 35 m^3/day at 35 meters head). Bernard McNelis of IT Power, in a recent briefing to the World Bank [Ref. 26], stated that photovoltaic pumping systems are economically attractive up to about 2 kW. This translates to a hydraulic energy demand of about 1700 m^4. It should be noted that this will most likely apply in low-head (less than 5 meter) applications.

2.5 REVIEW OF SIGNIFICANT PROJECTS

This review of the field performance of PV water pumping system is based principally on the project reports and interviews with key personnel on the performance of pumping systems in Mali, Botswana, India, Egypt and the significant pumping evaluation work performed for the UNDP and USAID. It is also based on comments received in the questionnaires on 29 pumping systems in 16 countries.

The following pumping projects have been reviewed in detail for this report:

- UNDP Pump Tests
- Mali Solar Energy Lab
- Sadat City, Egypt--Desert Development Project
- Botswana PV vs. Diesel Study
- Remote Village Pumping System in India
- Mali Aqua Viva Program
- Questionnaire Responses

2.5.1 UNDP Pump Tests [Ref. 27, 28]

A major pumping evaluation was performed from 1980 to 1983 on photovoltaic pumping systems by Sir William Halcrow and Partners with Intermediate Technology Limited. The study, which was funded by the UNDP, also resulted in a 1984 publication Handbook on Solar Water Pumping, which describes the technology, its application, and its economic viability. The following quote is taken from this handbook, based on installed system costs of $15 to $23 per Wp.

> "As a general approximation it can be shown that solar pumping systems for irrigation are beginning to become cost competitive compared to diesel pumps in situations where the peak daily water requirements are less than about 150 m^4 (for example 30 m^3/day through a head of 5m) and where the minimum monthly average solar irradiation is greater than about 15 MJ/m^2 per day [4.2 kWh/m^2-day]. For windy locations where the minimum monthly average wind speed is greater than 3 m/s a windpump would be a cheaper option.
>
> "Similarly for rural water supply applications solar pumping systems are becoming cost competitive compared to diesel pumps where the average daily water requirements are less than about 250 m^4 (for example 25 m^3/day through a head of 10m) and where the

monthly average solar irradiation is greater than 10 MJ/m^2 per day [2.8 kWh/m^2-day]. Windpumps are generally cost competitive at locations with minimum monthly average wind speeds greater than 2.5 m/s."

2.5.2 Mali Solar Energy Lab [Ref. 29, 30, 31]

During the past five years, a subtantial amount of field work has been performed by the Mali Solar Energy Lab and related organizations in Mali. Over 80 photovoltaic pumps have been installed in Mali. Unfortunately, few publicly disseminated reports have come out of the lab. An interview was conducted with N'To Diarra, the former head of the PV research group at the lab.

Mali experience has concentrated on centrifugal pumping systems, both low- and medium-head. No jackpumps have been evaluated according to Mr. Diarra.

There have been very few problems with PV arrays. Most performance difficulties have come from the pumps and electronics. In multi-stage vertical turbine pumps, vibration in the connecting drive shaft (surface-mounted motor and submerged pump--Exhibit 2-1b) has caused at least one broken shaft. For shallow well applications, centrifugal pumps are preferred since they provide the best electrical match to the array. Direct electrical coupling is desired in order to avoid sophisticated electronics. Data on the peak yield of the well and low-level water controls are two of the most important system design requirements.

Maintenance and technical support is most hampered by inadequate and unresponsive communications from the site to the manufacturer. Emphasis must be placed on training engineers in PV pumping system technology to perform troubleshooting, repair, and maintenance management.

There have been no user rejections of the systems. Demand is usually more than supply and this fact tends to lead to user dissatisfaction. Furthermore, because of the common failure to perform a "full system design," which incorporates sanitation considerations, users perceive problems with storage tanks, distribution systems and runoff systems as being failures of the PV system.

On performance and costs, a 1983 tender attracted bids of US $10 to $12 per Wp CIF Bamako. This included array, pump, structure, and wiring for an installation to produce 30 meters head at flows of 20 to 30 m^3/day. This results in a specific capital cost of $0.016 to $0.013 per m^4 at volume-head products of 600 m^4 to 900 m^4. This is more than twice the upper limit of the "viable" range specified by Halcrow; however, Mr. Diarra indicated that the decision to install pumping systems was of a political nature to show "real development." The choice of PV was necessary because of the unavailability of any other fuel.

2.5.3 Sadat City, Egypt - Desert Development Project [Ref. 32, 33, 34, 35]

The Desert Development Demonstration and Training Program utilizes an 8 feddan area (10 acres) for renewable energy/agricultural development work. The site has been entirely powered by a 10-kWp and a 3-kWp photovoltaic array since 1981. The 10-kWp array supplies 220-volt, 50-Hz power through a NOVA inverter to the headquarters building and an AC submersible pump at 43 meters of head. It includes 88.8 kWh of Exide battery storage. The 3-kWp system provides power exclusively to a positive displacement deep-well pump with DC motor and a booster pump for irrigation.

The array has performed reliably with average daily conversion efficiency of 7.22 percent. The deep-well AC submersible pump has also performed well. The positive displacement screw pump has run reliably without failure since mid-1984. Prior to that, excessive mechanical vibrations in the drive shaft of the pump prevented continuous operation and resulted in a number of pump failures. Additional drive shaft stabilizing bearings were added and the pump operates with an average of 60% efficiency. Significant experience was also obtained with the battery systems. Mr. Fadel Assabghy, who is responsible for the PV power systems at Sadat City, has indicated that battery maintenance must be tended to with unfailing regularity.

2.5.4 Botswana [Ref. 36, 37]

A study was performed, based on actual field data, on the question of the economics of PV versus diesel for water supply in rural Botswana. It was based on more than 3 years of actual field experience in the maintenance and operation of diesel-powered water supply systems.

Fuel usage, the cost of regular maintenance, the initial costs of the system and the replacement of individual components were considered. The study compared a 6-kW single-cylinder diesel engine and rotary screw pump with a photovoltaic power system and permanent magnet DC motor powering the same pump. The study found that "there are no significant mechanical obstacles to the introduction of PV water pumping into the country....The one question...is cost." [Ref. 14]

The study points out that a significant technical consideration for the application of PV is the borehole peak yield character. In a typical application, a maximum demand of 2 to 6 m^3/hr will occur at solar noon on clear days. Borehole yield tests often indicate that this rate is higher than the well recovery rate, and thus the well would dry out. Well peak yields may in fact be a significant limiting factor to the applications of PV systems.

Another pertinent design factor is the use of existing pumps and wells to capitalize on any equipment infrastructure. The design effort to do so, however, requires good communication between the equipment suppliers and the field.

A "continuous discounting" life-cycle cost analysis, based on a 2 percent real discount rate and a 20-year life, showed that PV is economically competitive with diesel engine systems at the present time. Diesel costs ranged from \$0.216/m^3 for 1300 m^3 hydraulic daily energy demand to \$0.561/m^3 for 3000 m^3 hydraulic daily energy demand. Comparative costs for PV were \$0.099/m^3 and \$0.372/m^3 respectively. The report also states that "all of the unit costs [PV] except for the desert village [3000 m^3] were below the current price charged for water and

there are no associated labor costs." [Ref. 15] This covered an analysis of borehole volume-head products of 150 m^4 to 1368 m^4. PV initial capital costs for the system were \$13 to \$14 per Wp for 150 m^4 to \$11 to \$12/Wp for 3000 m^4. (This range of economic competitiveness is significantly higher than any previously reported work and it may be due in part to the use of existing pumps and infrastructure to design, produce and install the systems.)

2.5.5 Remote Village in India [Ref. 38]

The installation of a photovoltaic pumping system (from 1979-1982) in a rural Indian village raised many important socio-economic issues. These involved bureaucratic and administrative problems, villager integral participation, and the ownership and management of facility and water.

The choice of the PV system was based on the past experience and technical limits of other water pumping technologies. Two villages in the area had diesels, but high incidence of breakdown and irregular fuel availability outweighed the value of the amount of pumped water. Bullocks could not be used because the water depth was 15 meters. Biogas would require cattle to be coralled to collect manure and the resulting questions of energy ownership and distribution were severe.

The system was installed following a long and difficult bureaucratic and administrative struggle. Transport of the equipment, customs, drilling of the well, testing of the yield, and well casing were a few of the tasks that progressed slowly. On one occasion, management problems and tribe rivalry resulted in violence. The following conclusions were reached

> "Such a project could never be successful without the close following and constant pressure of people alien to the village but fully accepted by it.... A solar water management committee came into being by consensus for the best and fairest distribution of solar water and has managed to satisfy contradictory needs"

At the published time of this article, the system had provided irrigation for one successful winter crop.

2.5.6 Mali Aqua Viva Program [Ref. 39]

In May 1974 the Mali Aqua Viva program started in an effort to provide some forage for animals and water supply for the local minister. In 1984, over 900 manual pumps, 4 diesels, and 30 PV-powered pumps were installed and operating. The thirty pumps deliver more than 800 m^3 per day from a depth of 20 meters. The peak installed capacity of PV power is over 48 kW. The following table gives the type and number of the installed systems:

30 pumps	39.0 kW
Hospital Power	8.6
4 Refrigerators	0.6
Classroom Lighting	0.2
Religious Mission Lighting	0.1
Total	48.5 kW

Based on the operating experience with the pumping systems it has been calculated that the cost of water from the PV pumps for one year was 3.1 Ff/m^3 (0.34 \$/m^3) compared to the manual pumps (foot operated) of 1.42 Ff/m^3 (0.16 \$/m^3). The cost of the solar pump was six times that of the manual pump. However, the volume of water produced was not comparable. The PV system produced 30 m^3/day and the foot pump 6 to 8 m^3/day; therefore, more foot pump installations would be necessary. Also no cost was associate with the manual pumping labor.

The most important information to come out of this work thus far has been the cost of infrastructure, on a unit pump basis, for operation and maintenance. For the PV pumping systems, 4870 Ff/year/pump (536 \$/year/pump) was the cost of maintenance and operation for 30 pumps. The costs are expected to be able to be reduced to 3000 Ff/year/pump (330 \$/year/pump), which is six times more than manual pump, but also yields six times the volume of water. Therefore, the indication is that per equal volume of water, PV and manual pump systems require the same cost level of supporting infrastructure.

Comparisons to diesel were performed. The results were that at the size of a 5.2-kW system, PV water pumped from 10 meters depth costs 0.65 Ff/m^3 (0.07 \$/m^3) at a rate of 350 m^3 per day while diesel-pumped water costs 0.50 Ff/m^3 (0.06 \$/m^3) at a rate of 50 m^3/hr. The level of maintenance was not included in the comparison.

2.5.7 Questionnaire Responses

Questionnaire responses provided little field operating data on systems such as amount of water pumped and insolation over a given period. Manufacturers performance claims were often referenced.

Exhibit 2-6 presents the comments received from the questionnaires that pertain to PV systems and components for the three areas of evaluation. Based on the small sample size and specific nature of the comments, the only valid information that can be understood is the number and nature of comments in one area compared to another. On this basis, one can see that respondents mentioned the reliability of PV more often than any other comment. The majority of negative technical comments were related to controls, regulators, and inverters--in other words, the electronics. Other comments were seen to reinforce what were already perceived to be key factors. These are technical and management support for repairs, procurement of spare parts, and operator training.

EXHIBIT 2-6 Questionnaire Comments Pumping Systems

	Reliability: PV	Reliability: Controller	Reliability: Pump	Implementation: Maintenance and Repair	Implementation: Management	Implementation: Financial
Pump Questionnaire						
[illegible]	• [illegible]		• [illegible]	• Full local participation		
[illegible]	• PV panels [illegible]	• Dry controller out of service	• Problems with pump control components		• Potential problems with jurisdiction and responsibility	
[illegible]	• Good reliability			• Trained technicians available		• Smaller systems are more competitive
[illegible]	• Systems extremely reliable			• Installation by local engineers		
[illegible]	• Good reliability			• Conventional design, installation started and done by Indonesia personnel		• Maintenance cost lower than conventional technologies
				• Operation by villagers		• High capital cost
[illegible]	• No problems with solar panels		• Problems with pump bearings	• Trained technicians available	• Problem with transport and access to remote sites	
[illegible]	• Pump is very reliable	• Surface power controller and inverter are less reliable	• Dry pump is not working	• Maintenance & Repair centers available	• Problems often administrative and logistical	
				• Sufficient training facility		
[illegible]	• Works very well		• Only a carbon brush pump replaced	• Almost all activities performed by in-country personnel		• No operating costs
						• PV system cost is greater than diesel pump cost by more than 50%
[illegible]	• Performed exceedingly well			• No breakdowns or technical difficulties		
				• Only maintenance is periodic cleaning of panels		
				• Government does not have technical, commercial, nor conceptual background to operate PV systems		
[illegible]	• No problem with PV pump					• Competitive with diesel systems (4-year payback)
Project Questionnaire						
[illegible]	• Maintenance free PV modules		• Surface centrifugal pumps are most reliable	• Minimal technical expertise required		
			• Moving parts are protected and accessible			
[illegible]	• No problems with modules	• Dry controller initially underrated	• Dry motor replaced because of calcium deposits	• No components locally available		• No systems locally financed
	• Occasional modules	• Problems with pump controllers	• Pump output less than projected	• No local technical expertise		
[illegible]	• Operating performance very good	• Inverters cost are too [illegible]		• Installation material not thoroughly read		• High initial cost
		• Dry inverter failed when user applied excessive voltage		• Modules are not cleaned regularly		
[illegible]	• Performance and reliability of PV modules is excellent			• No operational repair capability	• Problems with good servicing and spare parts	
				• Special training program available		
[illegible]	• [illegible] modules detected	• [illegible]	• No mechanical difficulties	• Installation and operation no problem with instruction manual	• Spare pumps/modules available in Bali/Kupang	
	• Performance of all modules is excellent		• Few moving parts			
			• Low level maintenance	• Repairs easily made, even in the field		
			• Early pumps had no over temperature or over speed cutouts. Failures due to clogged impellers and dry wells resulted			
[illegible]	• No problems with PV pump			• Local participation in system installation and start-up		
[illegible]	• PV modules reliability excellent			• Technical support by distributors		

[illegible] = positive description • negative description

[illegible] are relative to other systems as referenced in Questionnaire (QNCT) response

2.6 PUMPING REFERENCES

1. Sir William Halcrow & Partners and Intermediate Technology Power Limited; Small-Scale Solar Powered Pumping Systems: The Technology, Its Economics and Advancement-Main Report; UNDP Project GLO/80/003 executed by the World Bank; Swindon, United Kingdom; 1983.

2. Intermediate Technology Power Limited and Sir William Halcrow & Partners; Handbook on Solar Water Pumping; UNDP Project GLO/80/003 executed for the World Bank; Swindon, United Kingdom. February 1984.

3. Ibid.

4. Sir William Halcrow & Partners and Intermediate Technology Power Limited; Small-Scale Solar Powered Pumping Systems: The Technology, Its Economics and Advancement-Main Report; UNDP Project GLO/80/003 executed by the World Bank; Swindon, United Kingdom; 1983.

5. Diarra, N'To; former Head of the PV Research Group of the Mali Solar Energy Laboratory; interviewed on April 30, 1985.

6. Solar Electric International Inc., Pump model SEI 43 MS, May 1985.

7. Solar Electric International Inc., Low-cost PV pump system demonstrated at 6th European Photovoltaic Solar Energy Conference, April 1985.

8. A.Y. McDonald Mfg. Co. pump system, referenced by Scott Faiia, Assistant Director, CARE-Haiti, in comments about 3 solar pumping systems installed in 1983.

9. Jacuzzi, Grundfos and TriSolar pump systems, referenced by N'To Diarra, formerly of Mali Solar Energy Lab, as 1983 procurements.

10. Intermediate Technology Power Limited and Sir William Halcrow & Partners; Handbook on Solar Water Pumping; UNDP Project GLO/80/003 executed for the World Bank; Swindon, United Kingdom. February 1984.

11. Diesel system cost range based on reports by D. Danley [See Ref. 22], R. McGowen [See Ref. 14], and IT Power and Sir William Halcrow & Partners [See Ref. 2]; a verbal quotation from Alban Engine Company (May 1985); and questionnaire responses.

12. McGowan, Richard and Burrill, George; "Current Developments in Photovoltaic Irrigation in the Developing World"; Associates in Rural Development, Inc.; 1985.

13. Danley, Douglas R.; Photovoltaics vs. Diesel: A Grounded Economic Study of Water Pumping Options for Botswana; Massachusetts Institute of Technology; Cambridge, Massachusetts; 1984.

14. McGowan, Richard and Burrill, George; "Current Developments in Photovoltaic Irrigation in the Developing World"; Associates in Rural Development, Inc.; 1985.

15. Hart, Terence; Project Engineer and Chief of Party of Renewable Energy Project at the Mali Solar Energy Laboratory; interviewed in London in April 1985.

16. McGowan, Richard; Senior Engineer, Associates in Rural Development; interviewed in July 1985.

17. Diarra, N'To; former Head of the PV Research Group of the Mali Solar Energy Laboratory; interviewed on April 30, 1985.

18. Danley, Douglas R.; Design and Evaluation of a Positive Displacement Photovoltaic Water Pumping System for Botswana; Massachusetts Institute of Technology, Cambridge, Massachusetts; 1984.

19. Sir William Halcrow & Partners; "Technology Appraisal for Rural Water Supply - Socio-Economic Aspects of Solar Pumping"; Swindon, United Kingdom.

20. Ibid.

21. McGowan, Richard and Burrill, George, "Current Developments in Photovoltaic Irrigation in the Developing World;" Associates in Rural Development Inc; 1985.

22. Danley, Douglas R.; Photovoltaics vs. Diesel: A Grounded Economic Study of Water Pumping Options for Botswana; Massachusetts Institute of Technology; Cambridge, Massachusetts; 1984.

23. Matlin, Ron; Briefing to the World Bank; June 13, 1985.

24. Sir William Halcrow & Partners "Technology Appraisal for Rural Water Supply - Socio-Economic Aspects of Solar Water Pumping"; Swindon, United Kingdom.

25. McGowan, Richard; Senior Engineer, Associates in Rural Development; interviewed in July 1985.

26. McNelis, Bernard; "Photovoltaic Systems--Costs and Economics"; Briefing to the World Bank; June 13, 1985.

27. Sir William Halcrow & Partners and Intermediate Technology Power Limited; Small-Scale Solar Powered Pumping Systems: The Technology, Its Economics and Advancement - Main Report; UNDP Project GLO/80/003 executed by the World Bank; Swindon, United Kingdom; 1983.

28. Intermediate Technology Power Limited and Sir William Halcrow & Partners; Handbook on Solar Water Pumping; UNDP Project GLO/80/003 executed for the World Bank; Swindon, United Kingdom; February 1984.

29. Hart, Terence; Project Engineer and Chief of Party of Renewable Energy Project at the Mali Solar Energy Laboratory; interviewed in London in April 1985.

30. Diarra, N'To; former Head of the PV Research Group of the Mali Solar Energy Laboratory; interviewed on April 30, 1985.

31. Campbell, Richard; PV Instrumentation Consultant of the Mali Solar Energy Laboratory; interviewed multiple times from February to June 1985.

32. Assabghy, Fadel; "Applications of Renewable Energy Technologies for Desert Development"; The American University in Cairo.

33. Assabghy, Fadel; interviewed during site visit of Sadat City; May 1985.

34. Assabghy, Fadel and Derrick, Anthony; "Experiences with a Deep Well Solar Powered Irrigation System for Desert Development"; Energy for Rural and Island Communities III: Proceedings of the Third International Conference Held at Inverness, Scotland; September 1983.

35. Lesnick, Peggy, "Residential Photovoltaic Applications in Egypt--A Successful Integration of Tradition and High Technology"; Photovoltaics, The Solar Electric Magazine; July/August 1983.

36. Danley, Douglas R.; Photovoltaics vs. Diesel: A Grounded Economic Study of Water Pumping Options for Botswana; Massachusetts Institute of Technology; Cambridge, Massachusetts, 1984.

37. Danley, Douglas R.; The OTSE VDC Solar Borehole: A Case Study in Decentralized System Design; Reston, Virginia; 1984.

38. Amado, P. and Blamont, D.; "Implementation of a Solar Pump in a Remote Village in India: Economical and Socio-Cultural Consequences. Three Years of Working Experience"; Energy for Rural and Island Communities III: Proceedings of the Third International Conference Held at Inverness, Scotland; September 1983.

39. Chevillard, N.; "Evaluation du Programme Energie Solaire de Mali Aqua Viva"; Afrique Industrie; March 1985.

SECTION 3.0

AGRICULTURAL PRODUCT PROCESSING

Developing remote energy sources suitable for processing agricultural products (agri-processing) has been given a high priority by donor agencies and development organizations because agri-processing constitutes a "productive end-use" of energy (i.e., a quantifiable product is produced that may have commercial value). Photovoltaics as a power source for agri-processing has been successfully demonstrated over the past 6 years with the operation of the Bourkina Fasso (formerly Upper Volta) PV grain mill and water pump.

The key factors in the applications of PV-powered agri-processing equipment have been determined on the basis of the Bourkina Fasso project. Reliance on this one project experience is possible only because of the quality and comprehensiveness of the technical and institutional information produced by the managing contractor, NASA-Lewis Research Center in Cleveland, Ohio.

The Bourkina Fasso system achieved an average availability of over 93% for four years of operation. The support by NASA-Lewis undoubtedly contributed to this fact. Technical difficulties occurred with the PV array and control components. Since current technology has been improved in these areas, it is expected that PV systems used for powering DC motor-driven agri-processing equipment will exhibit equally high reliability, even given a lower quality of technical support.

Local management of the operation and maintenance and the existence of technical support for trouble-shooting and procurement of repair parts were the most key institutional factors.

Finally, the high cost and capital-intensive nature of PV appears to be a significant impediment to the application of PV-powered agri-processing equipment. Life-cycle cost calculations, using energy and grain production

data from Bourkina Fasso, suggest that systems of that size will only be cost-competitive with diesel-powered mills if they are fully utilized throughout the day and year. In addition, the inherent and demonstrated reliability of a PV-powered agri-processing system may be offset by the cyclical nature of loading (i.e. grain availability). A more detailed investigation is currently being conducted by the Mali Solar Energy Lab (MSEL) using a PV grain grinding system design that is based on the experience in Bourkina Fasso. A report on that project is expected to be produced by the MSEL in the fall of 1985.

3.1 APPLICATION DESCRIPTION

For purposes of this evaluation, agri-processing is defined as a mechanized rural operation for processing agricultural product or crop residue into productive and potentially commerical forms. It includes grain grinding and the drying and cutting of harvested crops and crop residues. Any agri-processing equipment that uses, or that can be adapted to use, an electric motor (mechanical or manual drive) can be powered by PV. Thus far, PV has been demonstrated only as a power source for grain milling. In this application it replaces the manual labor or the fuel associated with diesel-driven grain mills.

The design and operation of a PV-powered agri-processing system is similar to a battery charging system. The same basic components can be applied to any motor-driven, stationary, agricultural implement.

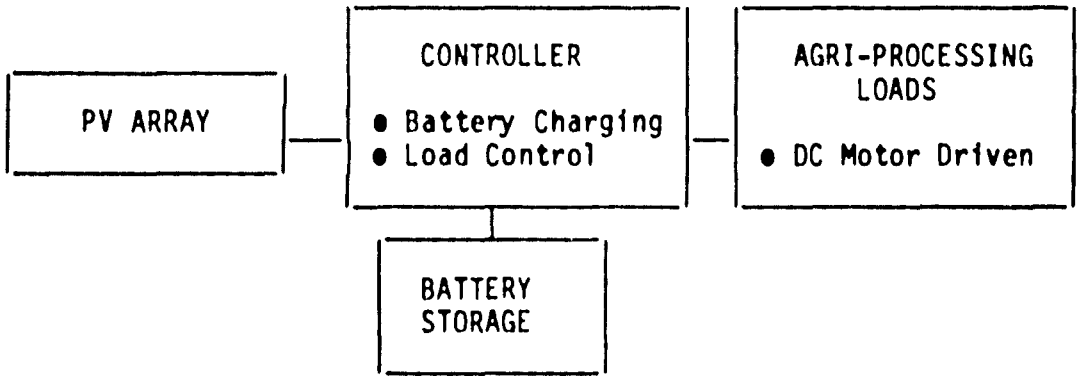

EXHIBIT 3-1 Basic Components of a PV-Powered Agri-Processing Power System

Exhibit 3-1 outlines the basic components of an agri-processing system. The PV power system consists of a PV array, batteries, controls and instrumentation. The array is sized to supply the predicted load, which is a function of the agricultural process, the desired product quality and the availability of product for processing. Batteries are a necessary component in order to maintain motor speed, provide for load surges, and permit operation for four to five hours during periods of poor insolation. The control system regulates

the system voltage and the battery charge, and it may control load voltage to maximize operating efficiency of the agri-processing equipment. The rate of processing (e.g., grinding), and hence the motor loading, is primarily controlled by the operator through observing a simple ammeter.

The basic PV power system design shown in Exhibit 3-1 can be applied to drive any agri-processing equipment that uses, or can be modified to use, a DC motor (the cost and relatively low reliability record of stand-alone inverters dictates the need for DC drive motors).

3.2 CURRENT DESIGNS AND COSTS

There are no commercially available, off-the-shelf, PV-powered grain-milling systems being marketed today. However, grain mills, diesel and gasoline engines and hand-operated mills have been sold in the developing world for many years. Standard burr and hammer grain mills were used in Tangaye. They were belt driven by a DC motor that used a two-stage motor starter. The DC motor was driven by the PV/battery power system.

Small PV/battery DC power systems have been used successfully in navigation, communication and other small electric load applications for over 10 years. These systems are suitable for driving any equipment that can be operated by a DC motor. The principle components are as follows:

- PV array as the power source
- Control system for battery charge and load control
- Battery system to provide better motor speed, control of load surges, and minimal energy storage

The battery system should be sized large enough to balance energy supply and demand, support starting surge currents and provide 4 to 5 hours of energy storage. In terms of storage capacity, it is important to recognize that the storage system consists of not only the batteries but also the processed commodity (e.g., ground grain). Effort should be made to keep battery size to a minimum and grain storage to a maximum in order to keep system costs down.

It was suggested by NASA-Lewis engineers that speed control of a grain mill through a solid-state electronic controller may be worth considering in order to optimize operating efficiency of the mill. At a minimum, the control system should be of proven design and should provide for identification of battery condition and load current(s).

The technical viability of small PV power systems suitable for operating agri-processing equipment has been demonstrated. The cost of the system is dependent on the cost of delivered energy in $/kWh and the efficiency of the mill. Data from the Tangaye system are provided in Exhibit 3-2. They have been used to indicate a system size and average milling efficiency. Using this information, the $/kWh and $/kg of grain have been determined.

Based on the data provided in Exhibit 3-3, current milling costs for a PV-powered grain mill are $0.06/kg in areas with an average solar insolation of 6 kWh/m^2-day, assuming installed PV power system costs of $13/Wp and average daily production of over 100 kg/day.

EXHIBIT 3-2 Operating Data for the Tangaye System [Ref. 1, 2]

Date	Hammermill Data	
September 1979 March 1981 (1.8-kWp Array)	Total Running Hours	1639 hours
	Rated Current	21 amps
	Actual Average Current	14.4 amps
	Total Amp-hours Used	23,649 amp-hours
	Total Energy Used	2,838 kwh
	Total Grain Ground	48,861 kg
	Grain Grinding Rate	30.2 kg/hr
	Average Operating Efficiency	17.2 kg/kWh
	Average Energy Use/Day	5.2 kWh/day
May 1981 - June 1983 (Array size doubled to 3.6 kWp to meet demand; also, the hammermill was changed)	Total Running Hours	5021 hours
	Motor Current	13.1 amps
	Total Amp-hours Used	65707 amp-hours
	Total Energy Used	7885 kWh
	Total Grain Ground (reported)	74,820 kg
	Total Grain Ground (estimated)	111,094 kg
	Grain Grinding Rate	22.13 kg/hr
	Average Operating Efficiency	14.09 kg/kWh
	Average Energy Use/Day	10.4 kWh/day

3.3 COMPARATIVE COSTS

Exhibit 3-3 provides the assumptions used for the comparative-cost analysis between PV and diesel. These parameters are used to construct Exhibits 3-4 and 3-5. Exhibit 3-4 compares the energy costs, in $/kWh, annualized over the life of the equipment, of PV and diesel power system options for daily energy demand levels representative of Tangaye. Under the most optimum PV cost and the worst diesel cost scenario, a PV-powered system is competative with diesel when energy demand is below 6 kWh/day. As a reference point, the average energy demand for the Tangaye system was 5 kWh/day.

This cost analysis for PV and diesel assumes full use of the equipment. This assumption is critical for a PV system because its costs are independent of whether it is operating. Therefore, it must be fully utilized to compensate for the high initial capital costs. Diesel power system costs, on the other hand, are mostly dependent on the cost of diesel fuel and maintenance, which are functions of operating time. For agri-processing applications, the design for full usage of a power system may not be practical. This fact would sway a decision in favor of diesel under most circumstances.

Exhibit 3-5 uses the power system costs from Exhibit 3-4 and the milling efficiency of Tangaye to calculate a grain milling cost. There is a slight difference in the cost of grain mills for the PV and diesel systems. A diesel-powered grain mill would most likely be driven directly from the engine and, therefore, would not require the DC electric motor and controls associated with PV-powered mill.

EXHIBIT 3-3 Cost Analysis Assumptions for Grain Milling

Array Size and Battery Capacity

	Load (kWh/day)					
	2	4	6	8	10	12
Array Size (Wp)[1]						
3 kWh/m^2-day	810	1630	2440	3260	4070	4890
4 kWh/m^2-day	610	1220	1830	2440	3060	3670
5 kWh/m^2-day	490	980	1470	1960	2440	2930
6 kWh/m^2-day	410	810	1220	1630	2040	2440
Battery Capacity (kWh)	6	8	12	16	20	24

1. Array size estimated using 90% power tracking efficiency and 50% of the produced energy passing through the batteries, which are 80% efficient.

PV System Data

	Cost	Life (Years)
PV Array ($/Wp)	10	20
Battery ($/kWh)	100	10
Grain Mill ($)[1]	2000	10
Installation & Warranty ($/Wp)	2	
O&M Power System ($/year)[2]	100	
O&M Grain Mill ($/year)[2]	100	

1. Grain mill efficiency of 17 kg/kWh.
2. O&M is irrespective of labor.

Diesel System Data (2.5-kW diesel) [Ref. 3]

	Low Cost	High Cost	Life (Years)
Diesel Engine ($)	1000	3000	7
Grain Mill ($)[1, 2]	1500	1500	7
Fuel ($/gal)	1.50	3.00	
Operating Efficiency	0.20	0.15	
O&M Diesel ($/year)[3]	200	400	
O&M Grain Mill ($/year)[3]	100	100	

1. Grain mill efficiency of 17 kg/kWh.
2. Assumes diesel engine directly drives grain mill, resulting in lower cost for mill.
3. O&M is irrespective of labor.

EXHIBIT 3-4

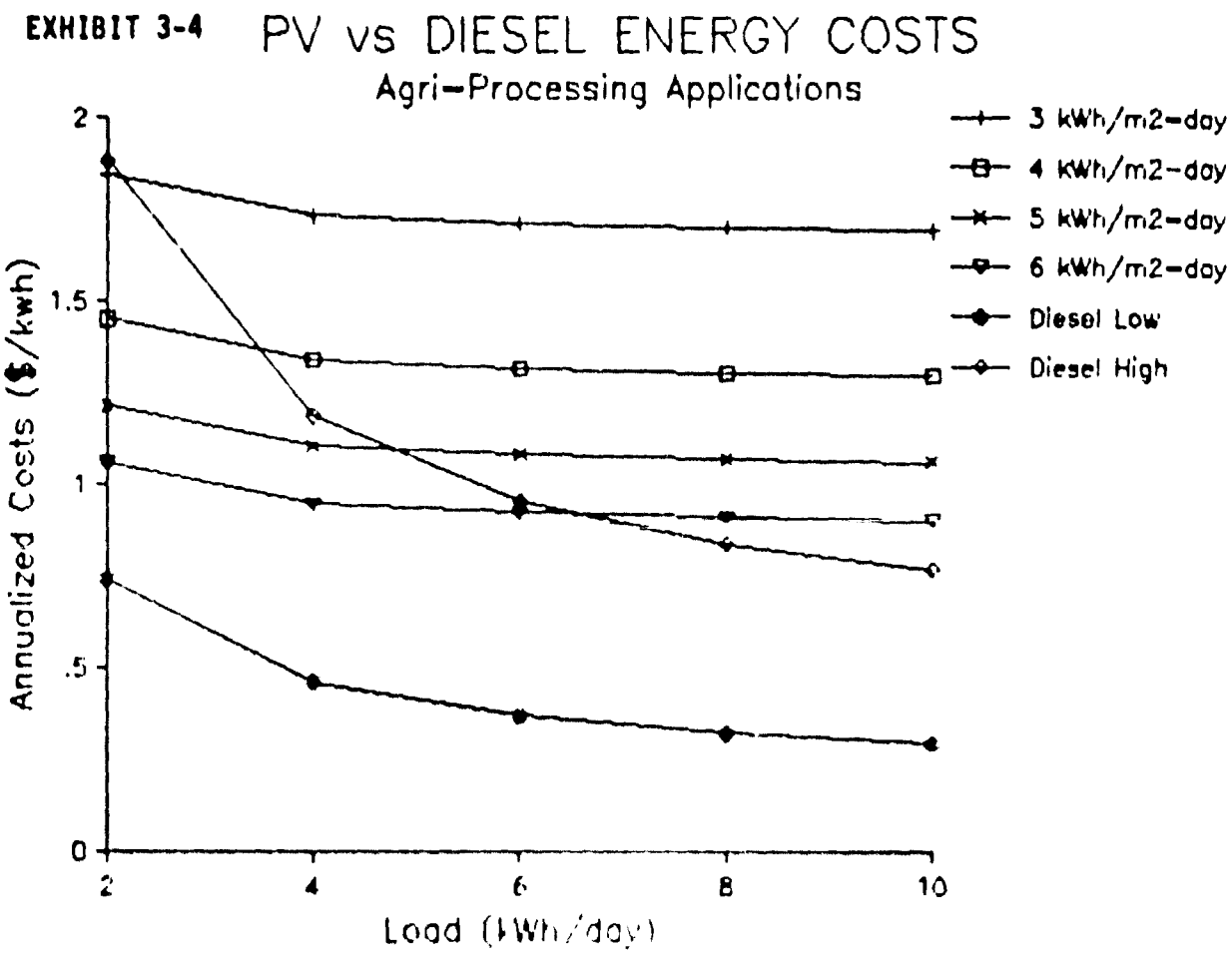

EXHIBIT 3-5

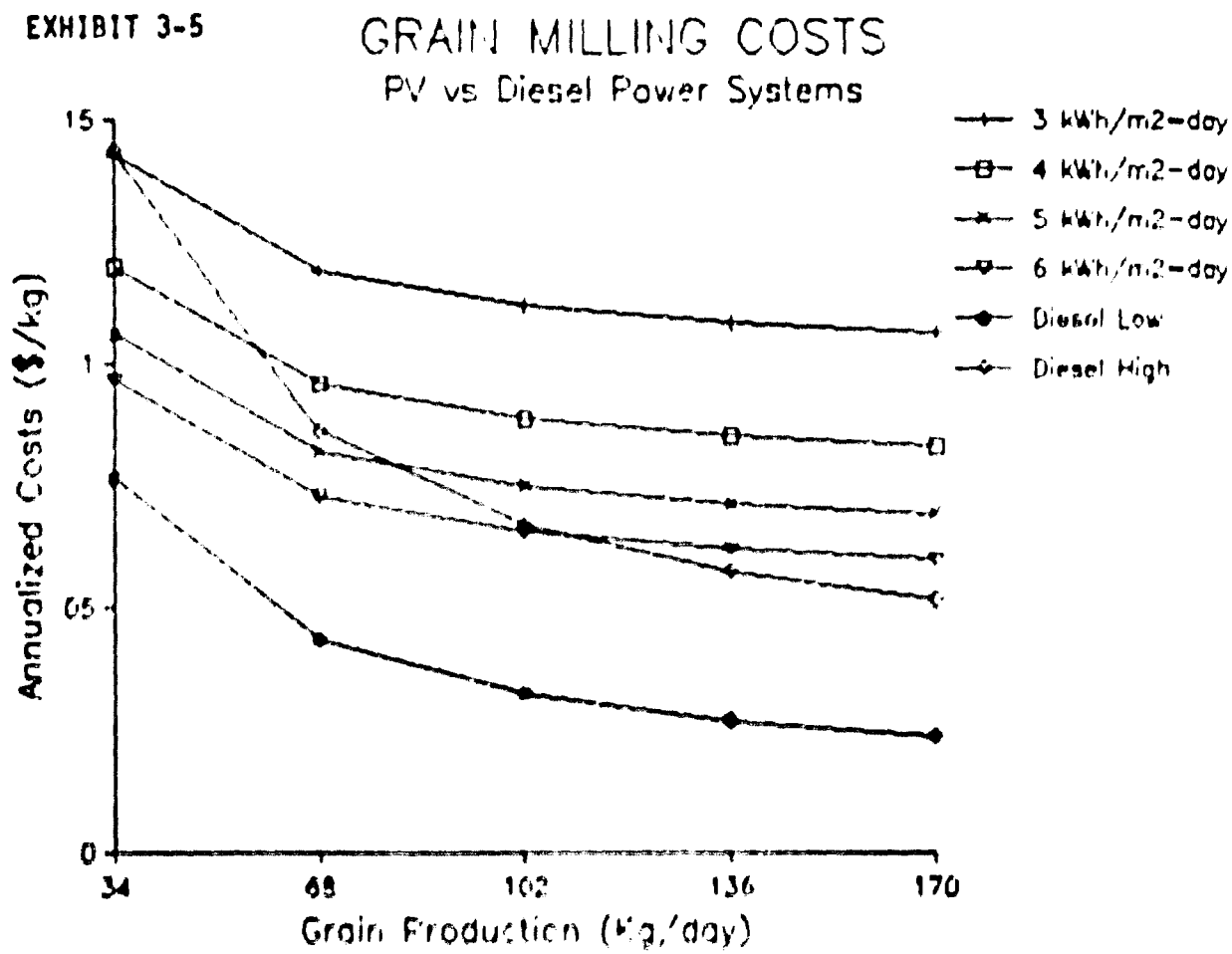

3.4 KEY FACTORS

The key factors for using PV as a power source for processing agricultural product are largely based on the results of one project--the photovoltaic-powered grain mill and water pump in Tangaye, Bourkina Fasso. Reliance on this one project for the identification of key factors for PV-powered agri-processing applications is made possible only by the quality and comprehensiveness of the technical and institutional information generated by the project.

Project searches and questionnaire responses identified only one other PV-powered grain mill project. Located at the Mali Solar Energy Lab, it will be installed in 1985 and has been designed based on the experiences in Tangaye.

The key factors that may adversely affect the viability of PV for agricultural processing are as follows:

- Agri-processing equipment selection
- Complexity of the power and load control system
- Management of the PV system
- Infrastructure
- Capital Costs

3.4.1 Agri-Processing Equipment Selection

The choice of agri-processing equipment must be carefully considered to ensure the appropriate product quality, production rate and process efficiency. At Tangaye, the grinding mill was changed twice--once for fineness and once for production and grinding efficiency. Since process efficiency directly affects the energy demand on the power system, the choice of equipment influences PV system design user satisfaction and eventually end-product unit cost.

3.4.2 Complexity of the Power and Load Control System

It was observed in Tangaye that the complexity of the original control system intimidated the technical support staffs of the in-country participating institutions. It is important to simplify the controls and instrumentation for PV-powered agri-processing equipment. Simplified control systems, from the user's perspective, have been developed and proven to be reliable and cost-effective in the field.

Only the basic levels of power conditioning and system control are necessary. These levels are voltage regulation and battery charge protection. Similarly, instrumentation should be limited to system voltage and array and load current meters. Experience in Tangaye showed that operators are able to manage the operation of the system, conserving energy when necessary and increasing use when permissable. Operators also self-regulate the load (current demand of the mill motor) to prevent overload.

3.4.3 Management of the PV System

The most important factor that can be identified as contributing to the success of the system is the effectiveness of local management in operating the system. The Tangaye system was established to capitalize on the existing positive practices of cooperative management in the village. The successful local management of the Tangaye system resulted in a sense of "ownership." Genuine interest and concern for the success of the project was exhibited. Wherever possible, local forms of management should be evaluated and used with the application of PV-powered agri-processing systems.

3.4.4 Infrastructure

Management of technical support and procurement of repair parts is a weak link in all technology applications in remote areas of developing countries. This includes the quality of "site to support" communications, operating and

repair manuals, the time and cost involved in procuring parts, and technical training. These real factors of system performance must be considered prior to the application of PV for grain grinding, thrashing, cutting or any other agri-processing work.

3.4.5 Capital Costs

The high cost of PV and battery technology appears to preclude the commercial application of PV for most agri-processing applications. This conclusion is based mainly on the mismatch between the seasonal nature of agri-processing loads and the need for full utilization of the PV power to offset high initial capital costs. However, if an agri-processing system exists that is fully utilized throughout the day and year, PV power can be more cost-effective than diesel.

3.5 REVIEW OF SIGNIFICANT PROJECTS

As noted, only one significant project has been evaluated. Questionnaire responses did not identify any similar agri-processing applications, although some are believed to exist in India.

3.5.1 Bourkina Fasso [Ref. 4, 5, 6, 7, 8, 9]

Bourkina Fasso (formerly Upper Volta) is the site of the first stand-alone PV system project managed by NASA-Lewis under contract to USAID. It consists of a 3.6-kW array, 540 Ah of battery storage, a water pump and grain mill. Installed in 1979, NASA-Lewis has monitored the system closely and made several design and equipment changes. The array has been doubled in size to provide greater milling capability. The controller that NASA-Lewis designed and built was changed to a commercial solid state "black box" version to improve reliability and user satisfaction. The grinding mill was changed from a burr to a hammer and then again to another hammer mill to meet the demands for fineness of grind, equipment durability, and efficiency of the milling process. Over 90% performance reliability for the first four years has made it a success in the eyes of the villagers. Proceeds from milling are enough to pay an operator and generate capital for maintenance and special operational support.

Historic problems were with module thermal stress failures, the controller, the grain mill (fast wearing of burr mill plates because very fine grind was desired), and the pump. The controller was designed by NASA. The designated governmental institution for technical support was "intimidated" by its complexity. The controller was changed to a commercial voltage regulator/controller. One isolated pump system failure occurred when the jackpump pushrod bent on a downstroke in the shallow well. Use of the system has been successfully managed through a grain mill cooperative established specifically for that reason. The village, which was dispersed, is now centralized around the service

points of water pumping and grain milling. Building an attitude of "community mill ownership" was important to the success of the system.

The development of the system has been continuous over the past five years. Efficiency improvements may yet be made by using a voltage regulator for the mill to control speed and thus operate the mill at its optimum grinding rate.

3.6 AGRI-PROCESSING REFERENCES

1. Martz, James E.; Ratajczak, Anthony F.; and DeLombard, Richard; Operational Performance of the Photovoltaic-Powered Grain Mill and Water Pump at Tangaye, Upper Volta; NASA Technical Memorandum 82767; February 1982.

2. Martz, James E. and Roberts, Allen F.; Operational Performance of the Photovoltaic-Powered Grain Mill and Water Pump at Tangaye, Burkina Faso (Formerly Upper Volta); NASA Technical Memorandum 86970; March 1985.

3. Diesel system cost range based on reports by D. Danley, R. McGowen, and IT Power and Sir William Halcrow & Partners; a verbal quotation from Alban Engine Company; and questionnaire responses. (See Section 2.6 for detailed citations)

4. Martz, James E. and Roberts, Allen F.; Operational Performance of the Photovoltaic-Powered Grain Mill and Water Pump at Tangaye, Burkina Faso (Formerly Upper Volta); NASA Technical Memorandum 86970; March 1985.

5. Martz, James E.; Ratajczak, Anthony F.; and DeLombard, Richard; Operational Performance of the Photovoltaic-Powered Grain Mill and Water Pump at Tangaye, Upper Volta; NASA Technical Memorandum 82767; February 1982.

6. Roberts, Allen F., "An Update of the Socio-Economic Impact Research on the Tangaye (Upper Volta) Solar Energy Demonstration"; University of Michigan; August 1982.

7. Martz, James E. and Ratajczak, Anthony F.; Design Description of the Tangaye Village Photovoltaic Power System; NASA Technical Memorandum 82917; June 1982.

8. Bifano, William J.; Ratajczak, Anthony F; and Martz, James E; A Photovoltaic Power System in the Remote African Village of Tangaye, Upper Volta; NASA Technical Memorandum 79318; November/December 1979.

9. Ratajczak, Anthony; DeLombard, Richard; and Martz, James; NASA-Lewis Research Center; Interviewed on March 21, 1985 in Cleveland, Ohio.

SECTION 4.0

COMMUNICATIONS

PV-powered communication systems have a proven record of technical and financial success in the developing world. The application ranges from relatively large telecommunication systems operated by government or private companies to small, one module, one battery VHF radio systems used in health program radio networks. Information on over 40 systems in more than 7 countries has been reviewed to determine the key factors of performance. In general, there are no technical or institutional barriers to the widespread use of PV for remote communication systems. The general awareness and increased use of PV for commercial, governmental and private telecommunications indicate a high degree of viability for many applications in developing countries.

The key technical factors were observed to be the reliability of voltage regulators and battery charge controllers; the durability of radios and radio equipment; and the life of the batteries. Improvements in electronic controls (i.e., environmental protection by encapsulation) have occurred in the last two years so that proven and guaranteed equipment is now available. Battery life, which is dependent on proper charge regulation and user maintenance, can greatly affect the life-cycle cost of a system. There are no institutional barriers for small systems because of their simplicity and reliability. Larger, more complex systems are generally handled by in-country telecommunication companies and organizations experienced in power electronics. The reliability (i.e., frequency of repair) has been very low in these larger systems as well.

The initial capital cost of PV communication systems is the key factor that currently limits widespread applications. A recent evaluation showed that PV is financially competitive with conventional remote power systems up to 500 watts continuous load.

4.1 APPLICATION DESCRIPTION

Communication systems in developing countries have traditionally been powered by grid electricity, stand-alone generators, and/or batteries. Problems of unreliable supply, poor quality and the high cost of these energy sources have restricted the operation of small systems and severely impacted the performance and expansion of telecommunication networks in developing countries. Photovoltaics is often regarded as the best and most cost-effective energy supply for remote communications. It is estimated that the total number of new PV communication installations is approaching 10,000 per year worldwide [Ref. 1].

Photovoltaics has had more commercial success in communications-related applications than in any other remote power application. A typical example is in Guyana, South America. Although some repeater stations have both grid and diesel power, the poor quality of the grid and the unreliable supply of diesel fuel have resulted in the use of PV. Also in Guyana, a two-way radio network has been established to link remote health centers throughout the country. The costs and logistics of transporting diesel fuel to operate small engines for charging the radio batteries had been determined to be the highest cost of operating the radio [Ref. 2]. PV has been used for several years with no major problems. Similar situations exist worldwide.

There are three general kinds of communication applications in developing countries that have been powered by photovoltaics.

(1) Two-way Radios (VHF, UHF, mobile radios)

- Health care, rural commerce, political organization, and social interaction

(2) Televisions

- Education, entertainment

(3) Repeater Stations, Telephone Exchanges, and Satellite Earth Stations

- Telecommunications departments, commercial companies

A photovoltaic power system for each of these applications operates as a simple battery charging system. The basic components are the PV array, battery storage, and power controls. The complexity of power control may vary from no control at all, as with some single-module and small-load systems, to controls that optimize system performance by controlling individual components. Remote telemetry may also be part of a system, permitting remote control and monitoring.

Some telecommunication applications are hybrid systems of PV, diesel, and/or wind power technologies. The technical advantages of hybrid systems are the ability to reduce the amount of effective battery capacity required and to operate equipment at its optimal loading (i.e., diesel at its peak, full-load efficiency at infrequent, but regular, intervals). This reduces both maintenance and fuel requirements. The relative size of the PV array, battery and diesel is dependent on the cost of the PV, fuel and batteries and on the character of the loads.

A generic system configuration is shown in Exhibit 4-1.

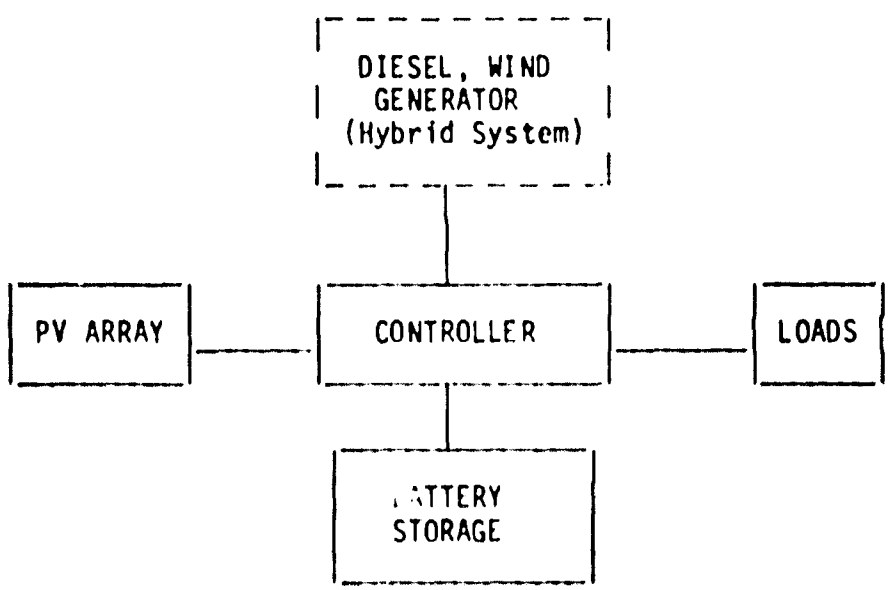

EXHIBIT 4-1 Basic PV Communication Power System

A recent evaluation by an established PV systems company showed that for continuous loads of less than 500 watts, PV alone is the least-cost choice [Ref. 3]. From approximately 500 watts to 700 watts, a hybrid of PV and diesel (assuming minimal wind potential) offers the best performance. These ranges depend on the capital and operating costs of PV and diesel systems.

4.2 CURRENT DESIGNS AND COSTS

The design of a PV system dedicated to operating a radio, television or commercial communication load is straight forward. Exhibit 4-1 shows the basic components. For continuous loads below 300-500 watts, a system would consist of the PV module(s), controls and battery storage. Above that range, a PV-diesel hybrid system should be considered, as a function of cost and the required reliability for the load.

All equipment components should have a demonstrated record of performance in the environment in which they will operate. The two most important components in this respect are the electronic controls and the batteries. System controls (i.e. electronic controls) should provide fail-safe protection of the battery against overcharge and extreme discharge. In order to minimize maintenance and contamination, the battery should be either sealed or designed for low water usage.

The cost of small PV-powered systems (DC) is approximately $15 per peak watt. It is estimated that volume orders would provide quotes of $13/Wp. For daily energy loads above 2 kWh/day, the cost of PV-produced energy will range from $1 to $2/kWh, depending on the solar resource. For loads below 2 kWh/day, the cost of PV energy does not vary substantially, for PV systems can be designed to meet exact load requirements. On the other hand, diesel engines, which are only available in discreet sizes, are not commercially produced in small-capacity sizes.

4.3 COMPARATIVE COSTS

The costs for energy produced by diesel or gasoline engines for low-load applications is highly site- and country-specific. To a large degree, the costs depend on the capital cost of small diesel engines. In addition, the remoteness of the site (and, therefore, the price of diesel fuel and associated maintenance) and the daily energy demands of the load significantly impact operating costs.

Exhibit 4-2, developed from PV and diesel system data provided in Exhibit 4-3, can be used to estimate the cost of delivered energy from PV systems for small communication loads. It can be stated that for daily energy loads up to 2.5 kWh/day, a PV-powered system will likely deliver energy for less cost than a diesel (where the capital cost for a diesel is between $1000 and $3000, and fuel costs are $1.50/gallon or more). In extremely remote locations, PV is commonly replacing primary batteries and diesel generators for commercial communication loads up to 10 kWh/day.

In summary, for small communication and education requirements (such as radios and televisions), PV is likely to be the least-cost remote energy source for daily loads less than 2.5 kWh/day. For remote commercial communication applications, PV should be considered for loads up to 10 kWh/day.

EXHIBIT 4-2

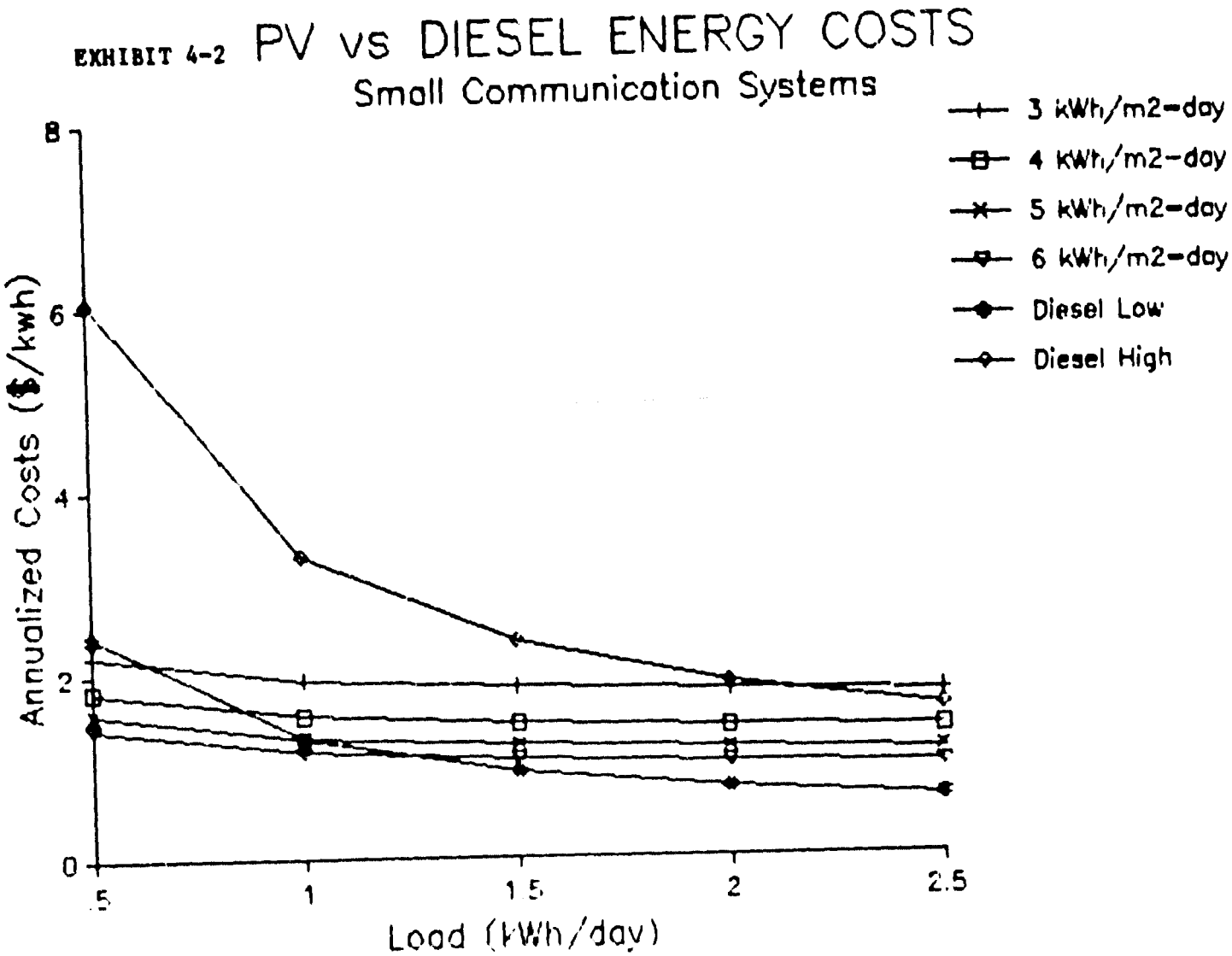
PV vs DIESEL ENERGY COSTS
Small Communication Systems
3 kWh/m2-day
4 kWh/m2-day
5 kWh/m2-day
6 kWh/m2-day
Diesel Low
Diesel High
Annualized Costs ($/kwh)
8
6
4
2
0
.5
1
1.5
2
2.5
Load (kWh/day)

EXHIBIT 4-3 Cost Analysis Assumptions for Communication Systems

Array Size and Battery Capacity

	Load (kWh/day)					
	0.5	1.0	1.5	2.0	2.5	3.0
Array Size (Wp)[1]						
3 kWh/m^2-day	0.20	0.41	0.61	0.81	1.0	1.2
4 kWh/m^2-day	0.15	0.31	0.46	0.61	0.76	0.92
5 kWh/m^2-day	0.12	0.24	0.37	0.49	0.61	0.73
6 kWh/m^2-day	0.10	0.20	0.31	0.41	0.51	0.61
Battery Capacity (kWh)	1	2	3	4	5	6

1. Array size estimated using 90% power tracking efficiency and 50% of the produced energy passing through the batteries, which are 80% efficient.

PV System Data

	Cost	Life (Years)
PV Array ($/Wp)	10	20
Battery ($/kWh)	100	10
Installation & Warranty ($/Wp)	2	
O&M Power System ($/year)[1]	100	

1. O&M is irrespective of labor.

Diesel System Data (2.5 kW Diesel) [Ref.4]

	Low Cost	High Cost	Life (Years)
Diesel Engine ($)	1000	3000	7
Fuel ($/gal)	1.5	3.0	
Operating Efficiency	0.2	0.5	
O&M Diesel ($/year)[1]	200	400	

1. O&M is irrespective of labor.

4.4 KEY FACTORS

The key factors that affect the performance of PV for communication systems are related only to technical and cost issues. No significant user-related problems have been experienced with PV-powered communication systems. Maintenance is limited to checking and adjusting battery electrolyte level in vented batteries. In fact, most remote telecommunication systems have been designed to be unattended.

In general, it has been found that the performance of remote PV-powered communications systems, as compared to other remote energy technologies, has been reliable and cost-effective. There have been isolated failures of voltage regulators, control electronics, and radios, but the failure rate of these components is not significant. The general awareness and increased usage of PV for commercial and government-operated telecommunication networks indicate the overall viability of PV for communications. The factors that are most likely to impede the application of PV for communications are as follows:

- Voltage regulator/battery charge controller reliability
- Radio equipment durability
- Battery life
- Financing of systems

4.4.1 Voltage Regulator/Battery Charge Controller Reliability

Statistical data on the number of failures of charge controllers and voltage regulators is unavailable. However, based on experiences with early solid-state charge controllers and isolated reports, if there are failures, they are most likely to be in the voltage regulator or charge controller. The trend by manufacturers to encapsulate electronic components suggests that environmental conditions (e.g., humidity) have been the principal cause of the failures that have occurred.

4.4.2 Radio (Video) Equipment Durability

Similarly to voltage regulators and charge controllers, radios and other load devices must be capable of operating under site-specific environmental conditions. Maintaining a clean operating environment is not often possible in remote areas of developing countries.

4.4.3 Battery Life

The life of a battery has significant impact on the life-cycle cost of a communication system. Battery life is dependent on temperature, the number of cycles and the number of deep discharges. Since batteries are the only component requiring maintenance, user awareness of the state-of-charge and electrolyte level is important to ensure maximum battery life. Comparative cost analyses must include battery replacement costs during the life of a system.

4.4.4 Financing of Systems

The most important factor that impedes the application of PV communication systems is the high initial cost. The cost of powering a radio by PV is often less than by diesel or primary batteries, since fuel supply or battery replacement in remote areas is both costly and unreliable. Nevertheless, government and private company budget procedures are not oriented to capitalizing long-term (20-year) operating expenses in order to purchase PV for communication power requirements. Therefore, financing mechanisms for commercial systems are necessary. For small systems, the comparative costs are often so much less than replacing batteries or running gasoline or diesel generators that 1- to 3-year paybacks may permit users to purchase systems directly.

4.5 REVIEW OF SIGNIFICANT PROJECTS

The following communication projects have been reviewed in detail for this report:

- Micro-Wave Telecommunications in Papua New Guinea
- Telecommunications Systems in Austrailia
- Niger PV-Powered Televisions
- Tunisia Relay Power Systems
- Gabon Telecommunications Relay
- NASA-Lewis PV Medical System Radios
- Health Care Communication Systems
- Questionnaire Responses

4.5.1 Micro-Wave Telecommunications in Papua New Guinea [Ref. 5]

In Papua New Guinea (PNG), repeaters are located primarily on mountain tops and are accessible only by helicopter. Traditionally, repeaters in PNG have been powered by primary batteries. Primary batteries must be replaced on a regular basis, disposed, and imported (i.e., supply is subject to political and economic policies of foreign countries).

On June 13, 1976, a PV-powered repeater system was commissioned on Mt. Namshamati. The PV powers a microwave repeater that carries both domestic and international traffic and that is a vital link in the Trans-PNG Telecommunication Network.

The system consists of nine, 12-V, 1.65-A, 26-W modules (Solar Power Corp.), three in series. Because of the required reliability, the system was oversized by 50 percent (i.e., only 6 modules were really needed). The batteries are nickel-cadmium with a total of 240 A-h capacity. To operate at the nominal voltage of 36 V, 28 cells were connected in series and float charged at 41 V.

Performance as of October 1978 was as follows:

- system functions well except for one failure in the voltage regulator
- dust accumulation on the array is minimal
- water consumption by the batteries is negligible
- maintenance was non-existent

There are no institutional difficulties, as the management of parts and technical personnel is performed by a skilled, established organization. Maintenance and repair frequency have been reduced considerably compared to conventional systems.

Cost analyses of PV systems (at a price of $26 per Wp) versus primary batteries showed a one and a half to two-year payback in 1978. High costs for maintenance in primary battery systems and for transport to the site makes the choice of PV inevitable.

Six more PV-powered telecommunication routes were to have been installed by 1981:

(1) Boroko-Lae
(2) Lae-Goroka-Madang
(3) Goroka-Mt. Hagen-Wewak
(4) Lae-Raboul
(5) Boroko-Altoan
(6) Boroko-Mt. Hagern

4.5.2 Telecommunications Systems in Australia [Ref. 6]

Although Australia is not a developing country, its experience with PV-powered communications systems in remote sites are still applicable to this study.

Telecom Australia has been installing systems of up to 2000 Wp (300 W continuous) in rural and remote areas of Australia since the 1970s. On the order of 75 to 100 PV-powered repeaters are currently installed. Plans for 1100 more in the next few years are in progress.

Of the major systems installed, there have been no system failures. Telecom Australia has been obtaining "gratifying results" for over 10 years.

PV has been proven "extremely reliable and economical for telecommunications loads in the range of 1-300 watts continuous." For systems greater than 300 W, they plan to use hybrid systems of PV and wind or diesel (a demonstration project is underway).

4.5.3 Niger PV-Powered Televisions [Ref. 7]

In Niger, more than 1000 PV-powered television sets have been installed. PV technology was chosen because it is compatible with rural village conditions--isolated villages and precarious roads. The televisions serve as a valuable educational tool. The systems have been successful and the program is continually expanding.

4.5.4 Gabon Telecommunications Relay [Ref. 8]

A 650-Watt PV unit powers a relay station in Gabon. Installed in 1981, it has taken the place of either a kerosene turbogenerator or gasoline thermogenerator. In 1982, the conclusion of the French program SEMI was that this power level represents the upper limits of use in isolated villages. It is a pilot system still in the R&D stages. The costs of the system were two times that of a comparable thermogenerator. The system has run satisfactorily since its installation.

4.5.5 NASA-Lewis PV Medical System Radios [Ref. 9]

Radios were installed as part of the loads in five remote medical systems in Guyana, Ecuador, Kenya, and Zimbabwe. The radios were STONER VHF radios. They were designed to be powered from a 12-volt source. Each radio has a bipolar antenna. The radios performed without difficulty and provided good communications across distances of more than 200 km. However, a problem was experienced in Kenya where two radios were installed 30 km apart at two medical health centers--in Kibwezi and Ikutha, Kenya. The radio frequencies were found to be in error and not matched to each other. After the radios had been returned

to Nairobi and the antenna positions had been changed, the quality of the transmission only improved a small amount. The conclusion was that interference from the terrain and other local transmissions were at fault.

4.5.6 Health Care Communication Systems [Ref. 10]

The importance of two-way radio communications to medical programs can be described using examples from the Africa Medical Research Foundation and Guyana. The benefits and problems associated with maintaining a rural health communication system are explained at length in Reference 9. Comments relative to the power system are as follows:

> "Power supplies are a persistent technical problem. In locations with an existing power source (perhaps a town power supply or a generator for a hospital), voltage regulators may be needed to prevent damage from power surges. If voltage is much below specified output, it may not be possible to use local power to run the radio or recharge its batteries."
>
> "A common self-contained power source for two-way radios is a standard 12-volt DC automobile storage battery, recharged by a small diesel generator that must be properly cleaned and maintained. The costs and logistics of transporting diesel oil to remote locations--often it must be flown in--can make this one of the highest costs of operating a radio system. In contrast, solar panels can serve as the recharging source and can eliminate the need for generators and fuel. Although at present [1980] their capital cost is higher, they are becoming less expensive, and they require little maintenance until replacement is necessary. Field tests do not indicate any major problems with solar panels, but none have been in use long enough for definitive evaluation."

4.5.7 Questionnaire Responses

A summary of questionnaire responses are provided in Exhibit 4-4. Comments on cost are consistent with other references reviewed for this study--PV is less costly than conventional alternatives.

EXHIBIT 4-4 Questionnaire Comments Communications Systems

	TECHNICAL			INSTITUTIONAL		
	PV	CONTROL/ELECTRONICS	BATTERIES	OPERATION/MAINTENANCE & REPAIR	MANAGEMENT	COST
Belize (Robert Wirelait & Assoc.)	• Reliability exceptionally good				Isolated instances of deterioration of steel mounting equipment	o PV is viable - present equipment for communication and transportation systems are inadequate and outdated
Djibouti (ITERRIT/TITA)	o PV is well suited for communication field					o PVs are least-cost energy source for remote communications applications • Government budget can't afford PV systems because of high cost
Dominican Republic (CORTEL)	100% reliability-No service interruption since installation			o Very low maintenance cost		o PV is currently viable only where commercial power is not available • Intial installation cost extremely high
Dominican Republic (Direccion General de Telecomm.)	• 100% excellent performance	• Only problems detected were at block circut relay				
Lesotho (ATS)	• Systems are very reliable		o Good PV potential to charge batteries as throw-away dry cells are bought in large quantities in Lesotho	o Performance is good		o PV systems are cost effective in remote areas for low power applications
Lesotho (Swedish Telecomm. Int'l)	• Excellent reliability • Vandalism damage(rocks) • with full moon and cloudless sky the sr sy powers the 2nd way repeater			o Japanese engineer will assist and train during first yr. Local staff to operate and maintain system		o For low load telecom. purposes PV is cheaper per watt basis compared to diesel generators in both investment maintenance and fuel costs
Solarex Pty. Ltd.	• PV systems are very reliable	• Faulty installation and wire sizing • Defective regulator • Regulator failure after lightning strike • Typhoon damaged antenna		• Regulator repair is troublesome in remote areas -- Technical expertise is not available	• Delays in procurement of replacements	
United Nations	• Reliability has been good					

GEY = positive deviation • negative deviation

4.6 COMMUNICATIONS REFERENCES

1. U.S. Department of Energy; "Photovoltaics: Electricity from Sunlight"; DOE/NBMCE-1075; September 1984.

2. Goldschmidt, Douglas; Hudson, Heather E.; and Lynn, Wilma; "Two-Way Radio Helps Deliver Primary Health Care"; Development Communications Report; Clearinghouse on Development Communication; Washington, D.C.; October 1980.

3. Finch, G.A. and MacDonald; "The New with the Old--Photovoltaic and Conventional Cogeneration System"; Solapak Ltd. and Hawker Siddley Power Plant; Presented at the Sixth European Photovoltaic Solar Energy Conference; April 1985.

4. Diesel system cost range based on reports by D. Danley, R. McGowen, and IT Power and Sir William Halcrow & Partners; a verbal quotation from Alban Engine Corporation; and questionnaire responses. (See Section 2.6 for detailed citations)

5. Suarez, A.M.; "Solar Power for Papua New Guinea Microwave Telecommunication Networks"; Department of Public Utilities, Papua New Guinea; Presented at the International Telephone Energy Conference; Washington, D.C.; October 1978.

6. Moon, S.C.; Telecom Australia; Letter and documentation of PV communication systems. March 27, 1985.

7. Chevillard, N.; "L'Industrie Solaire Francaise en Afrique"; Afrique Industrie; March 1985.

8. Ibid.

9. Slominiski, L.T.; "Unresolved Equipment Problem Report--Kenyan and Zimbabwean Installations"; Development Sciences, Inc.; June 1983.

10. Goldschmidt, Douglas; Hudson, Heather E.; and Lynn, Wilma; "Two-Way Radio Helps Deliver Primary Health Care"; Development Communication Report; Clearinghouse on Development Communication; Washington, D.C.; October 1980.

SECTION 5.0

REFRIGERATION AND MEDICAL SYSTEMS

Refrigeration is a vital component of health care in the developing world for storing vaccines and producing ice in hospitals and health centers. Generally, there is no electricity in rural areas where these hospitals and health centers are located, or at best, fuel and power supplies are erratic and unreliable. Photovoltaic-powered refrigerators have often been claimed to offer better performance, lower running costs, better reliability and longer working life than kerosene or bottled gas refrigeration. In the past seven years, the USAID, the World Health Organization (WHO), the Center for Disease Control (CDC) and other government and health agencies have sponsored PV refrigerator development, principally through demonstration projects. Over 600 systems have been installed worldwide to date.

A review of significant PV refrigeration projects, representing over 175 installations in 38 countries has been performed. It shows that the technology has only recently matured. Early systems experienced some reliability problems, primarily with the refrigerator unit and controls. Photovoltaic array sizes and battery capacities were found to be insufficient under actual field conditions due to sizing errors and/or overloading of the system by the user. System reliability averaged about 80 percent. Systems that have been installed recently are being found to be more reliable, particularly those from suppliers that have had previous experience. The key factors that may have an adverse impact on the performance of PV systems have been determined to be accurate array and battery sizing; user training; close coordination with the end-user organization; and the comparative cost of PV refrigerators to kerosene-powered refrigerators. The most significant finding of this evaluation work is that there are no significant technical barriers to the application of PV

refrigerators. In addition, in a recent financial comparison in The Gambia, PV refrigerators were found to be competitive with kerosene-powered refrigerators.

The performance of PV refrigerators is therefore dependent on the use of proven equipment that is suitably matched to the location and more importantly, on the user's understanding of the operation (i.e., proper loading) of the system.

5.1 APPLICATION DESCRIPTION

PV refrigeration systems consist of a PV array, voltage regulator, small set of batteries and a refrigerator unit. Exhibit 5-1 shows a schematic of a typical system.

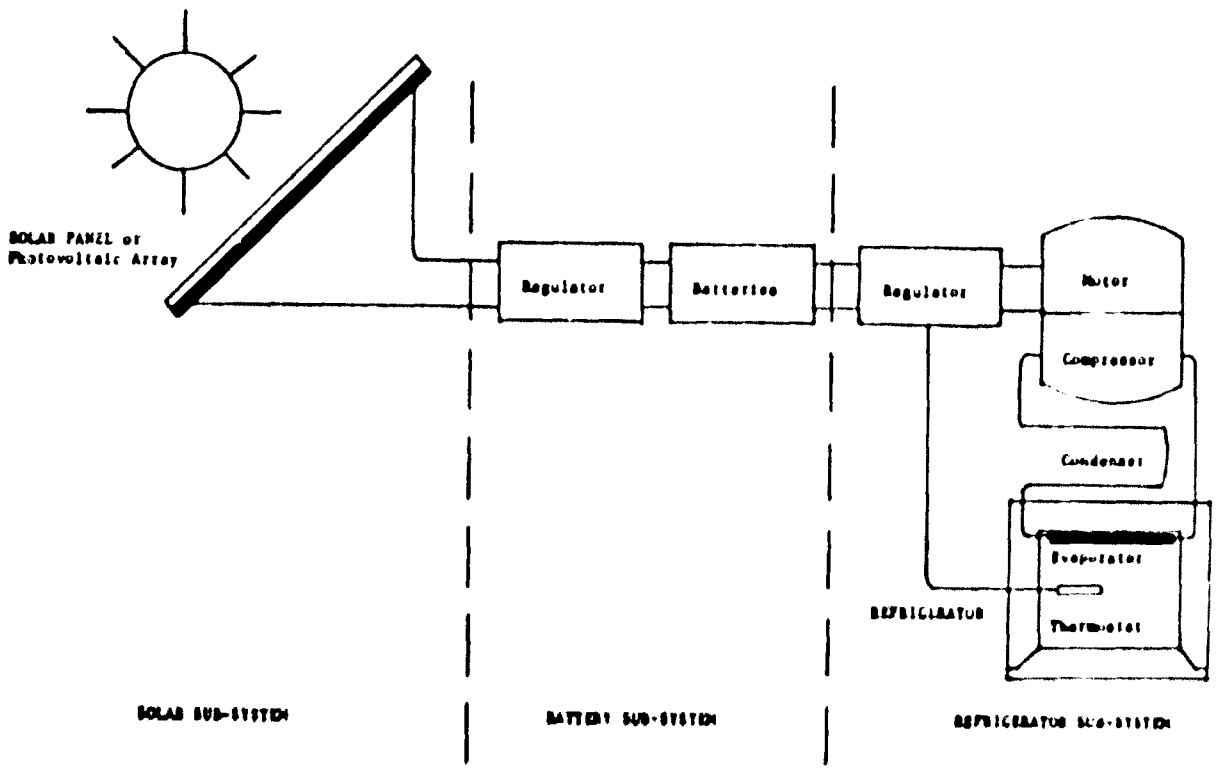

Exhibit 5-1 Schematic of a Solar-Powered Refrigerator (Source: IT Power)

Currently, only photovoltaic compression refrigerators are commercially available as suitable for vaccine storage. A typical system has a refrigerator/freezer compartment with a usable vaccine storage capacity of approximately 30 liters and an ice-pack freezing capacity of 1 to 2 kg per day to permit daily transport of vaccines to remote clinics. The energy consumption of the unit is approximately 400 to 1000 W-h per day. The refrigerator

powered by a 12- or 24-VDC motor/compressor unit from batteries. The photovoltaic array, normally with a peak power of 100 W to 400 W, charges the battery via a regulator. Refrigerator/freezer cabinets cost $1000 to $3000 per unit, and total system costs are typically $2000 to $5000 FOB, or about $15 to $30 per Wp FOB.

Photovoltaic refrigeration systems are often part of larger PV-powered medical systems. For example, the NASA-Lewis Research Center, under contract to USAID, managed the application of 5 remote PV medical power systems in 1983. These consisted of the PV array, batteries, refrigerators, electrochemical sterilizer, lights and radio. This project and similar projects have been evaluated in this section of the report with emphasis placed on the performance of the refrigerator.

5.2 CURRENT DESIGNS AND COSTS

Significant design parameters for PV-powered refrigerators are the size and use of the refrigerator, as they relate most directly to the energy demand on the PV/battery power system. Refrigerator capacities vary widely, from 3.6 to 200 liters.

The need for solar refrigerators is greatest at peripheral health centers serving populations of 20,000 to 100,000. The quantity of packed vaccines needed to fully immunize 150 infants and their mothers is approximately 4 liters [Ref. 1].

There is no agreement, however, on the best size for a PV vaccine refrigerator. Opinions differ on the quantity and volume of other biologicals that might be stored in the health center refrigerator and many people believe that a larger cabinet will have a wider market. It is also important for the system to have the capacity to freeze ice packs, which are used when transporting vaccines from the health center to the field for immunization. The ice production capacity is the significant load on the system. As such, it will influence the PV array size, and hence the system cost, significantly.

In 1981, the WHO issued an outline specification for photovoltaic-powered refrigerators. The minimum requirements are summarized in Exhibit 5-2.

Exhibit 5-2 WHO 1981 Outline Specification for Photovoltaic Refrigerators [Ref. 2]

Net Vaccine Capacity	30-40 litres (top opening)
Ice-Making Performance:	Minimum 1 kg/24 hrs in +32° ambient
Refrigerator Performance:	No part of the vaccine storage area to exceed +8°C or drop below -3°C in: (a) +43°C ambient temp (b) +32°C ambient temp (c) +43°C day time/+15°C nighttime cycle.
Hold-Over Time:	More than 6 hours below +10°C when power cut out in +43°C outside temp
External Casing:	Non-corrodable
Minimum Battery Maintenance Interval:	One year
Insulation:	Rigid polyurethane

The basic performance requirements have been modified over the past years as a result of field experience. The requirements are currently under review, but can be summarized as follows [Ref. 3]:

1. The system should be sized to enable continuous operation of the refrigerator and freezer (loaded and including ice-pack freezing) during the lowest periods of insolation in the year.

2. The design of the system should permit a minimum of five days continuous operation when the battery is fully charged and no sun is available. The refrigerator and the freezer should be maintained at +32°C throughout the test and for a minimum of 12 hours before the test.

3. Refrigerator/Freezer. In continuous ambient temperatures of 20°C, 32°C and 43°C, the internal temperature of the refrigerator, when stabilized, should not exceed the range +0° to +8°C. This range should be maintained when, in an ambient temperature of +32°C the maximum recommended load of ice packs containing water at +32°C is inserted in the freezer and frozen solid without adjustment of the thermostat. The recommended load of ice packs should freeze in less than 12 hours and will weigh at least 1 kg without the material of the pack.

4. Photovoltaic Array. Modules should meet the latest applicable specifications laid down by the Jet Propulsion Laboratory (USA) or CEC (Joint Research Center, Ispra, Italy). Array structures should be designed to withstand wind loads of +200 kg/m² and should be provided with fixings for either ground or roof mounting. Appropriate photovoltaic-type sealed connectors, incorporating [illegible] relief [illegible] for the [illegible] cable, [illegible] be less than [illegible] systems and less than 40 meters long for 24-volt systems.

5. Battery Set. The batteries should be sealed or non-liquid electrolyte deep discharge type (minimum 1000 cycles to 50% discharge). Automotive batteries are specifically unacceptable for this application. The batteries should be housed within the refrigerator/freezer cabinet or in a cabinet separate from the refrigerator. In either case, they should be lockable.

6. Voltage Regulator. One should be provided. It should meet the charge/temperature requirements of the selected battery and should cut off the loads when the battery has reached a state-of-charge that can be repeated to a minimum of 1,000 cycles. The load should be automatically reconnected when the system voltage recovers. The circuit boards should be tropicalized, and the regulator housing should be sealed.

7. Instrumentation. An LED alarm should be installed to warn that power to the compressor has been cut by the regulator. An expanded scale voltmeter or an LED alarm should be installed to warn the user when the battery is in an unusually low state-of-charge to give adequate advance warning. The warning should be clearly marked "DO NOT FREEZE ICE PACKS" in the appropriate local language. If an external reading thermometer is provided for the refrigerator, it should be marked clearly in green between 0°C and +8°C.

   A thermostat or a defrost switch should be provided, but no other power switches should be installed.

   Circuit breakers or cartridge fuse holders should be fitted; a polyethylene bag holding 10 spare fuses should be supplied, and special attention should be given to corrosion of fuse mountings.

A summary of the characteristics of the principal PV-powered refrigerators currently available is given in Exhibit 5-3. It should be appreciated that there are many other 12-volt DC-powered refrigerators available and in use for leisure applications such as for RV's and boats. However, these have been designed for low initial capital cost, without consideration of energy consumption or internal temperature variation. Such systems, although easily adaptable to PV, are not suitable for vaccine storage. Refrigerators designed for PV power but not for vaccine storage include those of Arctic Cold and Sun Frost.

The WHO-EPI publishes product information sheets. Inclusion of a product in effect means that based on the information and experience available to WHO-EPI, the product is considered suitable for the cold chain. Institutional purchasers generally select equipment from these sheets.

Exhibit 1-8 Relevant Photovoltaic Refrigerators Commercially Available for Vaccine Storage*

MANUFACTURER	CONTACT OR MANUFACTURER	MODEL	REFRIGERATOR VOLUME (liters)	FREEZER VOLUME (liters)	INSULATION TYPE	COMPRESSOR(S) MODEL	INSULATION TYPE	THERMOSTAT TYPE	SYSTEM VOLTAGE	WEIGHT (excl. BATTERIES	ENERGY CONSUMPTION (Wh/day)	HOLD OVER TIME (hours)	ICE PACK FREEZING (Kg/no. of hours)
[illegible]	[illegible]	[illegible]	70	6	[illegible]	DANFOSS	POLYURETHANE	MECHANICAL	12	65	590	4.0	1.6/24
[illegible]	[illegible]	[illegible]	60	NIL	[illegible]	DANFOSS	POLYURETHANE	MECHANICAL	12	65	520*	4.0	NIL
[illegible]	[illegible]	[illegible]	36	2.8	[illegible]	DANFOSS	POLYURETHANE (110mm)	MECHANICAL	12	48	320	6.0	1.6/24
[illegible]	[illegible]	[illegible]	55	20	[illegible] BOARD	DANFOSS	POLYURETHANE (150mm)	MECHANICAL	12		260*	N/K	1.0*
[illegible]	[illegible]	[illegible]	100	14	[illegible] BOARD	DANFOSS	POLYURETHANE (150mm)	MECHANICAL	12	60	650	N/K	1.0*
[illegible]	[illegible]*	75	75	NIL	[illegible]	N/K	POLYURETHANE	MECHANICAL	12	11	360*	N/K	NIL
[illegible]	[illegible]*	75	75	NIL	[illegible]	N/K	POLYURETHANE	MECHANICAL	12	72	450*	N/K	NIL
[illegible]	[illegible]	[illegible]	37	37	[illegible]	N/K	POLYURETHANE	MECHANICAL	24	58	1040	4.0	2.1/9
[illegible]	[illegible]	[illegible]	110	0	N/K	N/K	POLYURETHANE	MECHANICAL	24	115	N/K	N/K	1.0 MAX
[illegible]	[illegible]	[illegible]	95	20	[illegible]	DANFOSS	POLYURETHANE	MECHANICAL	12	55	750	N/K	2/5/24
[illegible]	[illegible]	[illegible]	100	23	[illegible]	DANFOSS (2)	POLYURETHANE	ELECTRONIC (2)	12	77	720	3.0	3.3/24
[illegible]	[illegible]	[illegible]	60	NIL	DANFOSS	DANFOSS	POLYURETHANE (110mm)	N/K	24	N/K	N/K	N/K	NIL
[illegible]	[illegible]	[illegible]	100	N/K	N/K	N/K		N/K	N/K	N/K	N/K	N/K	N/K

* Manufacturer's data
N/K = Not known

The 1985 edition of the product information sheets will include the solar-powered refrigerators listed in Exhibit 5-4. Non-inclusion of a refrigerator system supplier should be considered significant. It is recommended that for vaccine storage, only the systems listed in Exhibit 5-4 should be used until others have independently been observed to pass the criteria and the laboratory test protocol of WHO, and have had satisfactory field trial experience.

Laboratory testing continues in Cali, Colombia on behalf of WHO and it is foreseen that a number of models presently being tested there will be included in any revised WHO product information sheet.

Exhibit 5-4 Solar Refrigerators Approved for the WHO/EPI Cold Chain

System Supplier	Refrigerator/freezer
Arco Solar (USA)	Polar Products RR2
BP Solar (UK)	LEC EV
Leroy Somer (France)	Leroy Somer 40
Polar Products (USA)	Polar Products RR2
Solarex (USA)	(a) Polar Products RR2
	(b) Marvel 4RTD
Solavolt (USA)	(a) Marvel 4RTD
	(b) Polar Products RR2

The availability (i.e. reliability of the refrigerator) is as important in the economics of refrigeration for vaccine storage as the capital cost of the system. System capital costs are dependent upon location, as the photovoltaic array size required is dependent upon the site insolation, ambient temperature, and system use.

During the course of this study all the known suppliers of photovoltaic refrigerators for vaccine storage were contacted for up to date price information.

However, such price information is, in many cases, unreal when it is known that there is no immediate sale prospect. The most real cost information is that from actual tenders. Exhibit 5-5 summarizes the cost data from the tenders for the supply of solar refrigerators for an area of the South Pacific. These costs are mainly for European-manufactured equipment. However, US-manufactured equipment is within the same range [Ref. 4]. Two situations were considered:

Specification A: a requirement for 15 to 30 liters of vaccine refrigeration, given a worst month solar irradiation of 14 $MJ/m^2/day$.

Specification B: a requirement for 60 to 100 liters of vaccine refrigeration plus ice production, given a worst month solar irradiation of 16 $MJ/m^2/day$.

Exhibit 5-5 Current Photovoltaic Refrigerator Costs (April 1985) [Ref. 5] (From Tenders)

SPECIFICATION	A	B
Refrigerator Size (Liters)	15-30	60-100
Freezer Requirement (kg/day)	NIL	1
Worst Month Insolation ($MJ/m^2/day$)	14	16
TENDERS:		
Array Power Range (Wp)	108-297	180-594
Battery Capacity Range (Ah)	100-456	420-912
F.O.B. Unit Cost ($)	1500-5500	1800-10,500
Typical Unit Cost ($)	3000	4000
F.O.B. Unit Cost ($/WP)	9-25	11-25
CIF Cost ($/Wp) (incl. monitoring instruments)	10-40	11-30

5.3 COMPARATIVE COSTS

The main motivation for the procurement of PV refrigerators is generally to overcome the widespread problems of fuel shortages and distribution difficulties associated with maintaining kerosene-fueled vaccine refrigerators in remote and sometimes inaccessible locations. Hence, a photovoltaic refrigerator competes directly with kerosene refrigerators in the market. At present, there are no other realistic options for remote clinics (available diesel generators are grossly oversized, and wind-powered refrigerators, although technically feasible, are not commercially available).

It is important for potential users to ensure that investment in photovoltaic vaccine refrigerators represents a sensible use of development funds when compared with the costs of an existing kerosene-fueled system. Therefore, it is essential to be able to present a rational analysis of the economics of switching to solar. The WHO/EPI program is not an "economic activity," and it is not possible to carry out a cost-benefit analysis. The only meaningful quantifiable results relate to the relative costs of the option and also their likely influence on the achievement of immunization program goals [Ref. 6]. This latter point is particularly important since the fixed overheads for any immunization program are generally large compared with direct vaccine refrigeration costs. It is only upon taking these costs into consideration that the financial benefits of PV refrigerators become apparent.

An analysis relating to an actual immunization program in the Republic of the Gambia has been used as an example. Refrigerator performance in this example is based on climatic data from the Gambia. Although the data used were from a particular site, the results are considered widely applicable. Variations in location will result in sizing changes. However, these changes are considered minor when compared to the size of the program overhead and the improvement in pro-

ductivity to be expected.

It is assumed, on the basis of data recently collected [Ref. 7], that:

(a) The overhead cost of the vaccination program is between $8000 per refrigerator (low-cost case) and $16,000 (high-cost case).

(b) The kerosene refrigerator is 85% reliable; (i.e., 15% of the vacines are lost). The capital cost is based on an Electrolux model RAK660. ($348 f.o.b). The kerosene refrigerator consumes 6 liters of fuel per day at a cost of $0.77/liter. Delivery of the kerosene costs $0.44/liter. The annual cost of spare parts is $136.

(c) The PV refrigerator is between 90% (high-cost case) and 100% (low-cost case) reliable (i.e., 0 to 10% of the vaccines are lost). This assumption is based on the fact that early installations have been 95-99% reliable. The energy consumption of the refrigerator is 0.5 to 1 kWh per day and it requires a 200-300 Wp PV array plus a 6-10 kWh battery bank. The low-cost case is based on a PV module cost of $5/Wp; a battery cost of $180/kWh; a BOS cost of $1.25/Wp and a refrigerator cabinet cost of $500. The high-cost case is based on a PV module cost of $7/Wp; a battery cost of $240/kWh; a BOS cost of $2.5/Wp; and a refrigerator cabinet cost of $900. In both cases, system integration, shipping and installation is another 21%.

(d) On the basis of 1983 figures, 19666 vaccines are delivered to each refrigerator. 15% (2,950) are broken on arrival, and a further percentage are lost due to the unreliability of the refrigerator (b and c above).

On the basis of these assumptions, Exhibit 5-6 shows the resulting unit dose costs that are calculated using a 10% discount rate over a 15-year period. It can been seen that:

(a) The overhead cost per dose is reduced by 6 to 7 cents by using a PV refrigerator because of the better reliability. Thus, the overhead finance is used more effectively.

(b) The refrigerator cost per dose is small compared with the overhead cost per dose and not significantly different between kerosene and solar for both low-cost and high-cost cases.

(c) The overall cost per dose is cheaper for the PV refrigerator, even where the PV refrigerator capital cost is high. It is important to note that periods when vaccinations cannot take place result in incompleted, and hence ineffective, courses of vaccinations. This effect is difficult to quantify but favors a refrigerator with high reliability.

EXHIBIT 5-6 Summary of Comparative Costs for Kerosene and Solar Refrigerators (based on actual data in the Gambia) [Ref. 8]

Assumptions

	Low Cost Case		High Cost Case	
	Kerosene	Solar	Kerosene	Solar
Installed Capital Cost ($)	400	3,424	400	8,856
Recurrent Costs ($ pa)	853	150	853	150
Availability (%)	85	100	85	90
Program Overhead Cost per Refrigerator ($)	8,000	8,000	16,000	16,000

Results

Useful Dose per Annum	14,208	16,716	14,208	15,044
Annualized Cost for Refrigerator ($)	913	564	913	1,478
Refrigerator Cost/Dose ($)	0.06	0.05	0.06	0.08
Overhead Cost/Dose ($)	0.56	0.48	1.13	1.06
Total Cost/Dose ($)	0.62	0.53	1.19	1.14

In conclusion, PV-powered vaccine refrigeration is technically more reliable than kerosene-powered vaccination refrigerators and under certain conditions less costly on a cost/dose basis.

5.4 KEY FACTORS

The most significant finding is that there are no significant technical barriers to the application of PV refrigerators. Based on recent financial comparison in The Gambia [Ref. 9], PV refrigerators were found to be financially competitive with kerosene-powered refrigerators on a cost-per-dose basis. The following are the key factors of performance:

- Accurate array and battery sizing
- User training and support
- Close coordination with the end-use organization
- Cost-competitiveness with kerosene

5.4.1 Accurate Array and Battery Sizing

The most significant information generated by the NASA and WHO field-trial programs is the number of systems that have experienced times when the refrigerator internal temperature was outside the required limit. Reasons for unsatisfactory performance include inadequate array/battery sizing and incorrect estimation of the load. These errors result in costly systems due to overdesign or in systems with poor performance due to underdesign.

IT Power recently evaluated the tenders submitted for the supply of 23 solar refrigerators/freezers for the Pacific Islands on behalf of the South Pacific Bureau for Economic Cooperation (SPEC). Sizing calculations performed by IT Power demonstrated that some suppliers had tendered with photovoltaic array sizes/battery capacities that would have been inadequate. It is often not understood that the solar regime in some countries can vary considerably according to topography.

Specific operating experience with a number of units in a given environment provides valuable design information for future applications. Thus,

systems installed by suppliers with previous experience are found to be more accurate in the sizing and estimation of loads.

5.4.2 User Training and Support

User training in both the capabilities of the system and how to obtain the best results has been shown to be inadequate. A number of users have been placing large amounts of warm material into the solar refrigerator at the end of the day, causing the internal temperature to rise above the acceptable limit. Although design modifications of the refrigerator compartments may be made in order to restrict their use to only vaccine vials, user training is the most critical aspect in dealing with misuse.

Indications from the field are that improved user training in maintenance and trouble-shooting, coupled with adequate documentation and spare parts, could have reduced the "down-time" of a number of installations. Back-up and support has varied from project to project, but there have been examples of users having to wait for instruction manuals after the installation of the solar refrigerator and waiting long periods for spare parts.

5.4.3 Close Coordination with the End-User Organization

The importance of working with appropriate host-country organizations and implementation agencies should be recognized. In this respect, the WHO/EPI field trials, which involved working with donor agencies, regional offices and local health authorities, provide an excellent network for reporting field data. Similarly, the NASA-Lewis program identified appropriate host-country organizations in their field trials sponsored by the Center for Disease Control and AID.

A number of lesser projects, however, have failed in meeting their objectives because the responsible agencies in the field have not been familiar

with the end-use. Often there is a tendency to work with academic or energy-related organizations rather than those familiar with rural health care.

5.4.4 Cost-Competitiveness with Kerosene

Very little work has been undertaken to compare the cost of solar refrigerators with conventional kerosene units. Most work has concentrated on the technical and institutional performance of PV refrigerators. As products have been refined and positive experience accrues with PV refrigerators, the comparative costs of PV and kerosene refrigerators will be a key factor in the decision to use PV-powered refrigerators. Realistic and responsible comparative analyses must be developed.

The pre-investment study [Ref. 10] on photovoltaic application for The Gambia used field experience and data for kerosene and photovoltaic refrigerators. The study shows that photovoltaic refrigerators could effectively reduce the cost per dose of refrigerated vaccine if photovoltaic refrigerators are substituted for kerosene refrigerators. Based on this analysis and on the technical performance of recent systems, it appears that photovoltaic refrigeration should be considered a viable option for vaccine refrigeration in developing countries.

5.5 REVIEW OF SIGNIFICANT PROJECTS

Project reviews incorporate the experience associated with more than 170 systems in 38 countries. The most significant work to date has been that performed under the direction of the World Health Organization and by NASA. The formal development and field demonstration programs conducted by these organizations have led to increased operating knowledge and subsequently improved system designs. Most recently, a significant cost analysis project was conducted in The Gambia on the competitiveness of PV with kerosene. That work is detailed in this section. Other work has been done by UNDP, UNICEF, AFME (France), GTZ (Germany), ODA (UK), Oxfam, ICRC and SWASO. However, the collection of detailed information on these projects is difficult as many are using a single or few refrigerators. Many of these projects are not being monitored, and there is little information available.

In the near future two additional projects should provide well-founded and statistically significant operating data on PV refrigerators. Projects are currently underway to install 100 systems in Zaire and 20 in the South Pacific, both funded by the European Development Fund. Because these have not yet been documented, they have not been summarized in this report. The separately bound report by IT Power does contain details of these projects.

The following refrigeration and medical system projects have been reviewed in detail for this report:

- NASA-LeRC 35 R/F Systems
- NASA-LeRC Medical Systems
- World Health Organization (WHO) Field Trials
- Senegal Medical Systems
- Immunization Program in The Gambia
- Questionnaire Responses

5.5.1 NASA-Lewis 35 R/F Systems [Ref. 11, 12, 13, 14, 15, 16, 17, 18]

PV-powered refrigerators for vaccine storage were installed by NASA-Lewis at 35 sites around the world from 1981 to 1983. The packaged systems included a PV array (160 to 363 Wp), R/F, and battery bank. Each R/F was instrumented with a thermograph and alarm to indicate internal compartment temperatures.

From October 1981 to July 1984 the refrigerator/freezers in the NASA trials accumulated almost 500 system months of operation. The refrigerator/freezers are reported to have operated correctly (i.e., maintaining internal temperatures within the required temperature range) for slightly more than 80 percent of the time. Although this is not an acceptable level of reliability for vaccine refrigeration, it is comparable with that of kerosene refrigerators. More significantly, all of the problems experienced are believed to be avoidable in future installations.

Systems in the Dominican Republic, The Gambia, Guyana, India, Mali and Thailand have experienced times when the internal refrigerator temperature was outside the required limit. Reasons cited for inadequate performance include:

- defective components (e.g., temperature controllers, thermostatically controlled air doors, voltage regulators)
- incorrect setting of the thermostat
- excessive amounts of warm material (e.g., food and drinks) being put in the refrigerator
- array shadowing

Exhibit 5-7 details component reliability in the NASA field tests. Of the various component failures encountered, none occurred consistently across the systems, and most were not considered serious. From a NASA-Lewis report, "...there have been no known PV system problems.... The R/F have been relatively problem free with no compressor problems.... A few problems [have

occurred] with compressor electronic control modules (ECM)....Instrumentation has been a major problem." In particular, instrumentation problems were encountered with the pyranometers and amp-hour meters--instruments that have been used successfully in many other projects.

	SPC/ADLER BARBER	SOLAVOLT/ MARVEL	SOLAVOLT/ POLAR PRODUCTS
SYSTEMS INSTALLED	19	5	5
SYSTEMS REPORTING	19	2	2
PHOTOVOLTAIC MODULE	1 - Ivory Coast (remained functional)		
VOLTAGE REGULATOR	1 - Indonesia	1 - St. Vincent (before installation)	
CABLE CONNECTOR	1 - Indonesia 1 - Guyana 1 - Ivory Coast		
BATTERIES	Minor corrosion experienced		
ELECTRONIC CONTROL UNIT	Fuse blown - Indonesia Fuse blown - Guyana ECU failure - Ivory Coast	1 - Jordan	
COMPRESSOR	NIL		
REFRIGERANT LOOP	1 unit received low on freon in Maldives		
FAN	1 - Ivory Coast	1 - Honduras (before installation)	
AIR DOOR	NIL	1 - Thailand	
THERMOSTAT/ALARM	1 - Alarm incorrectly wired by SPC delivered to Ecuador	1 - Honduras (before installation)	

EXHIBIT 5-7 NASA-LEWIS FIELD TRIALS - COMPONENT RELIABILITY

The systems operate with little operator support. Misuses of R/F (e.g., for cold drinks, meat storage, etc.) has been observed on several systems. The thermograph incriminates the user. Some R/F have yet to be used for vaccines because the health programs or the vaccines themselves are not available.

The cost of current PV R/F systems ranges from $3500-6500 and is dependent on the location, system design and supply point of the R/F. World Health Organization specifications of 100-liter capacity are being modified for specific requests. Designs can currently be obtained that limit access to the cold space for anything other than vaccine viles. ECM failures are not substantial enough to consider reliability a serious concern.

5.5.2 NASA-Lewis Medical Systems [Ref. 19, 20]

Included among the 35 NASA LeRC R/F systems were five stand-alone PV-powered medical systems installed in four countries--Guyana, Ecuador, Kenya (2), and Zimbabwe. The 1.5-kW PV systems were designed to supply power for R/F, lights, sterilizer, and radio. All materials and load devices, excluding concrete and fencing, were supplied as a package. Ecuador's system was 3 kW and included a dental drill and inverter. Guyana's system included a water pump. The systems were heavily instrumented to produce detailed data on load use, resource availability, and equipment performance.

All five systems have functioned reliably regarding array, battery, and control function. However, the systems have produced little useful data due to instrumentation failures. The automatic data acquisition systems were customized for the project. Some electronic "logic card" problems were experienced with the controller. The sterilizer (electrochemical) failed to perform properly in all the systems. Subsequent analysis has shown that electrochemical technology does not meet medical sterilization specifications. (Since sterilization is as important as vaccine refrigeration for rural health care, other sterilizer technologies,

such as electric steam heat, are being investigated.) Several flourescent light ballasts and R/F fuses have blown. Spare light tubes are not available beyond those supplied with the system. One R/F has had an electronic control module (ECM) failure. Radio performance in Kenya has been poor because of terrain and other radio interference.

No problems have arisen with respect to the acceptance and use of the systems. However, Guyana has yet to place vaccines in the R/F. Difficult battery access resulted in acid spillage in Guyana. Maintenance and technical support in Ecuador was not continued because the trained technicians left their positions or the support organization went on strike. In addition, the electric grid has reached the village and the health center is no longer dependent on PV. Plans have been made to move the system to the Galapagos Islands. One system in Kibwezi, Kenya was installed next to a 20-kW diesel engine that has since broken down. Passive interest in the PV system has changed to active support as dependency has switched.

Design of these basic systems today would replace the electrochemical sterilizer with a steam/pressure sterilizer, omit the instrumentation, and use a state-of-the-art controller. With total loads of 1.5 to 2 kW, the current price for such a system, including end-use components, would be $25,000-30,000 installed.

5.5.3 World Health Organization (WHO) Field Trails [Ref. 21, 22, 23, 24]

The WHO Expanded Program on Immunization has sponsored laboratory tests (1980-1983) and field trials (installed in 1983 and 1984) of PV-powered refrigerators for vaccines. A total of twenty field trials were initiated in Ghana, Kenya, Tanzania, Columbia, Yemen Arab Republic, India, the Philippines and the South Pacific Islands.

Based on laboratory tests and initial field trial results, four refrigerator models have been approved by WHO for vaccines (Polar Products RR2,

LEC EV570, Frigesol 4C and Marvel 4 RTD). Others tested by WHO were rejected based on characteristics such as high energy consumption, lack of ice-making capability and unacceptable holdover time.

Technical problems encountered with the field trials include improper sizing of the array/battery and instrumentation failures. A number of systems in the Philippines have undersized arrays. There is also concern over the array/battery sizing of six systems in India and one in Yemen Arab Republic. WHO has found that energy consumption in the field does not match that anticipated based on laboratory tests. Discrepencies are most likely due to the fact that their strictly controlled laboratory tests did not account for misuse of equipment in the field.

5.5.4 Senegal Medical Systems [Ref. 25]

A 670-Wp medical power system was installed at Mt. Rolland in the Theis region of Senegal in 1982. The system provides for loads up to 56 watts. The PV system competes against the following alternatives to supply basic medical service power:

- The use of gas or butane for refrigerators and lighting (reliability of these refrigerators had been poor)
- The supply of distilled water with medical supplies obtained from administrative headquarters
- Ironing of laundry with charcoal-heated irons
- Microscope work during the daytime with sun reflection lights
- Human-powered water pumping
- Little or no ventilation

The PV system provides lighting, improved ventilation with the use of fans, and high-quality power for use with laboratory instruments. Overall it made a decisive improvement in health service effectiveness. Each dispensary deals with 10,000 inhabitants, providing 100 to 150 consultations per day.

The system costs 200,000 Ff (US$20,000--1985 conversion). The system is experimental and the price includes R&D work. The system was oversized; 430 Wp would have supplied the load. Oversizing was the result of a load overestimate.

5.5.5 The Gambia [Ref. 26]

An analysis relating to an actual immunization program in the Republic of The Gambia, is given by way of example in Exhibit 5-8. The analysis assumes that the solar vaccine refrigerator will be 90-100% reliable, compared with kerosene refrigerators being only 85% reliable (i.e., 90-100% of the vaccines stored are usable from solar refrigerators but only 85% from kerosene units). This assumption is based on the field experience in The Gambia and the experience with other PV refrigeration systems around the world.

The methodology used for the financial analysis entails calculating life-cycle costs for each option by taking the summed present values of their respective cash flows. These are annualized to obtain relative annual running costs, discounted to the present using a 10 percent discount rate.

The total program overhead is $400,000 or approximately $14,000 per health center. For the purposes of analysis, both a low program overhead and a high overhead have been used for comparison. These are $8,000 and $16,000 respectively. Similarly, for the solar refrigerator a high-cost and low-cost case are considered as given in Exhibit 5-8.

It was assumed in the analysis that (on the basis of 1983 figures) 14,208 doses per refrigerator per year would be administered using kerosene, while 15,044 to 16,716 would be administered from the same supply of vaccines if solar refrigerators were used. These figures reflect 85%, 90% and 100% refrigerator availability (for kerosene, solar high, and solar low, respectively). It can be seen from Exhibit 5-8 that the program overhead per dose ranges from

$0.98 with a kerosene refrigerator down to $0.93 to $0.84 using more reliable solar units. Of course, this is not a cost-saving as such, but it does draw attention to the substantial overhead involved in giving a vaccination over and above the costs of the refrigerator and its operation and maintenance. A small increase in refrigeration costs could be acceptable if it allows significantly better use to be made of a relatively expensive infrastructure. Therefore, the benefit consists of improved cost-effectiveness rather than reduced costs.

	Kerosene	Solar Low	Solar High
Capital cost (installed)	$ 400	3,424	8,856
Recurrent costs	$ 853	50	150
Annualized life-cycle costs	$ 913	564	1,478
Availability (assumed)	% 85	100	90
Doses per annum per 'fridge	14,208	16,716	15,044
Refrigerator direct cost/dose	$ 0.06	0.05	0.08

Program o'head/fridge:	LOW $8,000			HIGH $16,000		
	Kerosene	Solar Low	Solar High	Kerosene	Solar Low	Solar High
Program o'head/dose	$0.56	0.48	0.53	1.13	0.96	1.06
Direct cost/dose	$0.06	0.04	0.10	0.06	0.04	0.10
Total cost per dose	$0.62	0.52	0.63	1.19	1.00	1.16

EXHIBIT 5-8 Summary of Comparative Costs for Kerosene and Solar Refrigerators (based on actual data in The Gambia)

5.5.6 Questionnaire Responses

Questionnaire responses show a concentration of negative remarks on refrigeration controls and infrastructure support, both for health vaccine and technical support for the system. Exhibit 5-9 is a tabulation of comments.

EXHIBIT 5-9 Questionnaire Comments Refrigeration Systems

	TECHNICAL					INSTITUTIONAL		
	PV	BATTERIES	CONTROLS	RF	OTHER	OPERATION/MAINTENANCE AND REPAIR	MANAGEMENT	COST
Botswana (BHET)				• Reliability problems with fridges			• Clinics seem reluctant to abandon old fridges	
Dominican Republic (Regional Office of Health 1)	• System has worked well	• Battery for the controls was replaced		• Replacement of worn out fan motor brushes not available locally	• Thermostat is damaged	• Maintenance support by AID discontinued • Users have indifferent attitude towards system		
Ecuador (IME)						o Local participation 100% in installation start-up and maintenance	o Some local participation in design and manufacture	o PV is only economically and socially profitable alternative in some locations
Indonesia	• Good reliability					o Good institutional capability		• High capital cost
Kenya (AMREF)	• Very reliable				• Sterilizer does not work	o Little maintenance required • Few local technicians	• No spares available	
Liberia (USAID) [1]			• Voltage regulator inoperable	• Compressor inoperable		o Local engineer is making repairs	• System was in storage for two years	
Mali (LESC)				• Problems with fridge fuses				
Zaire (Samuelo Mem. Hospital)					• No refrigerant left - not replaced as yet		• Refrigerator was lost in transport	o PV systems are viable due to lack of kerosene
Zaire (USAID)		• One battery out of six stolen in transit	• Fuses and wiring to electric module burnt after 1-1/2 years • Spare electronic module left by SPC technician was wrong model	• Three out of ten refrigerators completely broken down • Four other units do not maintain sufficiently cool temperatures	• Scaffolding to support solar modules stolen • Fan cooling the compressor in one broken-down unit consumed too much energy	o Technician from local electrical construction firm available to perform routine maintenance for first 1-1/2 years • Technician moved - no assistance available o Solar equipment available locally	• Health workers require more training and monitoring	
Zimbabwe (Ministry of Energy)	• No problems with PV array	• No problems with batteries	• Electronic module/ compressor malfunction		• Sterilizer never worked • Data collection instrumentation never worked	o Repairs made by suppliers (covered by guarantee)		

KEY: • positive denotation • negative denotation

1. Equipment environmental damage due to exceptionally long storage near ocean.

5.6 REFRIGERATION REFERENCES

1. Dierolf, Carlos F.; Lloyd, John; and Karrasco, Peter; "PV Refrigeration Systems for Vaccine Storage"; Pan American Health Organization and World Health Organization.

2. World Health Organization; "Solar Refrigerators for Vaccine Storage and Icemaking."

3. Intermediate Technology Power, Inc.; "Photovoltaic Powered Refrigerators - Second Draft"; August 1985.

4. Ibid.

5. Ibid.

6. Dierolf, Carlos F.; Lloyd, John; and Karrasco, Peter; "PV Refrigeration Systems for Vaccine Storage"; Pan American Health Organization and World Health Organization.

7. Intermediate Technology Power, Inc.; "Photovoltaic Powered Refrigerators - Second Draft"; August 1985.

8. Ibid.

9. UNDP/World Bank; "Pre-Investment Report on Solar Photovoltaic Applications in the Health and Telecommunications Sectors (The Gambia)";j March 1985.

10. Ibid.

11. Intermediate Technology Power, Inc.; "Photovoltaic Powered Refrigerators - Second Draft"; August 1985.

12. Bifano, William J.; DeLombard, Richard; Ratajczak, Anthony F.; and Scudder, Larry R.; "Status of DOE and AID Stand-Alone Photovoltaic System Field Tests"; NASA-Lewis Research Center; Presented at the Seventeenth IEEE Photovoltaic Specialists Conference; May 1984.

13. Hein, Gerald F.; "Design, Installation and Operating Experience of 20 Photovoltaic Medical Refrigerator Systems on Four Continents"; Solar Power Corporation; Presented at the IEEE Photovoltaic Specialists Conference; 1982.

14. Lerner, Terry; "Fridges to Fight Childhood Disease"; Solar Age; April 1983.

15. Ratajczak, Anthony; Memorandum to USAID Site Managers; June 11, 1984.

16. Darkazalli, Ghazi and Hein, Gerald; Solar Photovoltaic Powered Refrigerators/Freezers for Medical Use in Remote Geographic Locations; NASA CR-168268; October 1983.

17. Kaszeta, William J.; Qualification Testing of Solar Photovotlaic Powered Refrigerator Freezers for Medical Use in Remote Geographic Locations; NASA CR-168181; December 1982.

18. Ratajczak, Anthony, F.; DeLombard, Richard; Martz, James; Interviews conducted at NASA-Lewis Research Center; Cleveland, Ohio; March 21, 1985.

19. Gibson, Roy; Solarex Corporation; Rockville, Maryland, Interview conducted February 1985.

20. Slominski, Lawrence, T.; Discussions on Field Experience with Five Medical Systems, 1985.

21. World Health Organization; "Solar Refrigerators for Vaccine Storage and Icemaking."

22. McNelis, B. and Lloyd, J.S.; "Evaluation of Solar Refrigerators for Use in the Vaccine Cold Chain;" Presented at Solar Energy for Developing Countries: Refrigeration and Water Pumping; Conference organized by the U.K. section of ISES; January 1982.

23. Dierolf, Carlos F.; Lloyd, John; and Karrasco, Peter; "PV Refrigeration Systems for Vaccine Storage"; Pan American Health Organization and World Health Organization.

24. Intermediate Technology Power, Inc.; "Photovoltaic Powered Refrigerators - Second Draft"; August 1985.

25. Chevillard, N., "Rentabilite et Limites du Solaire", Afrique Industrie, March 1985.

26. UNDP/World Bank; "Pre-Investment Report on Solar Photovoltaic Applications in the Health and Telecommunications Sectors (The Gambia)"; March 1985.

SECTION 6.0

LIGHTING

Photovoltaics for individual and community lighting applications is emerging as a very significant application for PV in the developing world. The demand for lighting in rural areas of developing countries is commonly supplied by kerosene, paraffin, or candles. Lighting from these fuel sources is of poor quality and is expensive. A kerosene lamp provides one-eighth the light of a 20-watt flourescent tube. In Papua New Guinea a typical household will spend over $200 per year to operate two kerosene lamps. Due to these high prices, the market for single module PV lighting kits is estimated to be 15 MW in Papua New Guinea alone. Thus, PV-powered lighting systems appear to have a high potential of being viable for widespread application based on their comparative quality, reliability, and cost.

The review of PV lighting as a viable application for PV in developing countries has been based on projects referenced in the questionnaires (77 systems in 8 countries), and on the significant and detailed work performed in Papua New Guinea and Zimbabwe. In addition, small PV lighting system experience is perhaps most prevalent throughout the South Pacific and more specifically in Fiji and French Polynesia. Significant work in these countries is discussed in Section 7.0, Village Electrification.

The key factors in the use of PV lighting systems have been determined to be (1) the reliability of charge controllers and DC ballasts (2) the availability of spare parts and (3) the ability of consumers to secure financing for the purchase of individual lighting systems.

The conclusions of these evaluations show that PV lighting for individual homes is technically reliable and cost-competitive with lighting from kerosene lamps. Paybacks between 2 and 7 years have been reported in separate

studies conducted in Papua New Guinea and Zimbabwe. The only barrier to the widespread application and private sale of systems appears to be financing.

6.1 APPLICATION DESCRIPTION

Over the past 5 years, PV-powered lighting systems have become readily available. Systems have been designed for two basic applications: area lighting and individual use lighting. Area lighting systems are used for community lighting, street lights, and security lighting purposes. These systems consist of a PV module; battery; simple voltage regulator; timing controls; and an efficient fluorescent, low-pressure sodium or mercury vapor lamp. Several companies offer complete self-contained units equipped with light poles and a weatherproof container for the battery and controls. Exhibit 6-1 is a diagram of a typical system. The costs range from $1,000 to $2,500 depending on the supplier and the lighting level. The lamp pole represents a significant portion of the cost of a system. Therefore, some manufacturers supply only the PV, lamp, and related electrical equipment, permitting the user to supply the pole and in some cases the battery.

The second basic application for PV-powered lighting is individual use lighting. These are typically one-to-two module systems operating two-to-four 20-40 watt fluorescent lights in a private household or community building. Such systems may be portable. This type of lighting has usually been combined with other end-use devices such as refrigerators and radios and operated from one PV/battery power system. The performance and viability of dedicated PV lighting systems is similar to the performance of these components in combined systems.

Most PV equipment companies today offer small PV lighting systems. A typical layout is shown in Exhibit 6-2. In general, a system consists of the PV module(s), simple voltage regulator and controller for battery protection, and DC fluorescent lamp(s). The cost of a small two-lamp (20 watts each) system is approximately $300 to $500 in a developing country.

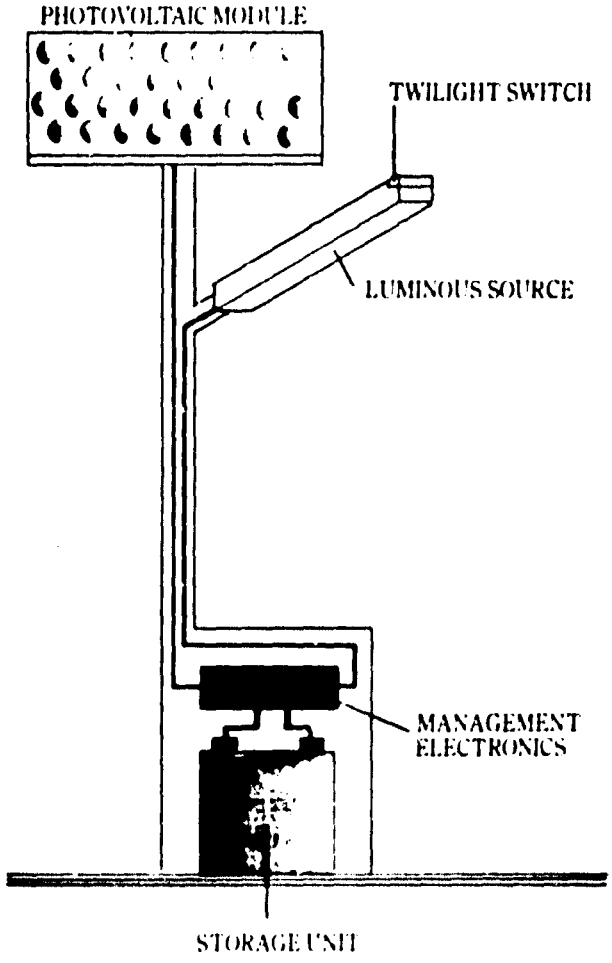

EXHIBIT 6-1 Area Lighting System

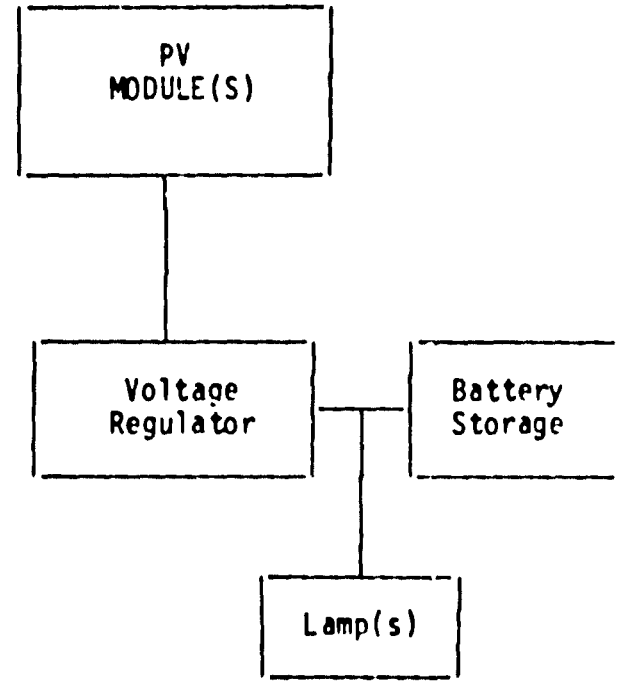

EXHIBIT 6-2 Individual Lighting

Common to both area lighting and individual lighting systems is the use of gas vapor lights (i.e., fluorescent). The performance of these lights is important to the efficient and reliable operation of the system. Fluorescent lamps require a high-frequency electric charge to excite the gas molecules. After this "starting" charge the lamp requires a relatively lower power and frequency to produce light. This function is performed by a "ballast." The difference between an AC and a DC flourescent light is merely the ballast. Therefore, in order to maintain the same size tube and save on fixture costs, developing countries may simply purchase the DC ballast and convert their own AC fixtures.

6.2 CURRENT DESIGNS AND COSTS

Currently available lighting systems consist of small systems for home, medical services, and rural businesses. Area lighting systems are also offered for roadway, security, and community lighting. A typical dedicated home lighting system, comparable to kerosene lighting practices used throughout developing countries, is detailed in Exhibit 6-3.

EXHIBIT 6-3 Dedicated PV Lighting System [Ref. 1]

Specifications	Life (Years)	Guaranty (Years)	Price ($)
1 PV Module - 40 Watts, nominal	>15	10	$ 300
1 Battery - 100 Amp-hour capacity	5	3	70
2 Fluoresent Lights - 20 and 7 watt	1.5	1	70
Charge Controls	5	1	50
Packaging, Handling, Freight, Profit			10
		Total	600

Such a system would provide from 144 to 192 watt-hours/day of useful lighting energy in a solar regime of 4.5 to 6.0 kWh/day (battery and system conversion efficiency of 80%). A typical usage pattern would be for the 20-watt lamp to be used 3 to 5 hours per night for general activities (e.g., cooking, reading, working) and the 7-watt lamp to be used 8 to 12 hours for night lighting and security. Approximately three days of storage would be available.

An important design aspect of small lighting systems is portability. In rural houses in developing countries, kerosene lamps are used both inside and outside, for a variety of purposes. The cost of the lamp plus its low lighting level requires that it be portable so that its light can be dedicated and

concentrated. In Papua New Guinea, a fluorescent lantern using a nickel-cadmium battery has been developed and tested to compete with kerosene lamps.

Area lighting units powered by PV are also available from several manufacturers. Generally, these units use high-efficiency lamps such as low-pressure sodium vapor (LPSV) or mercury halide lamps. Exhibit 6-1 shows a typical design. Units that cost $1000 will provide adequate area illumination for vehicular traffic, security, and general purpose community activities. However, LPSV lamps create a yellow cast, which may deter widespread acceptance for community activity lighting.

PV-powered area lighting systems are a relatively new product. As such, they do not directly replace a specific product. Therefore, comparative cost analysis is not possible. The systems are most applicable for security, safety, and community lighting needs where the cost of extending conventional power lines or operating a dedicated generator may be relatively high.

6.3 COMPARATIVE COSTS

Conventional lighting practices in developing country villages involves the use of kerosene-fueled lamps. Lighting is used for evening activities such as cooking, reading, simple work, or social relaxation. During the night, a lamp is kept lighted for security and safety. A typical household may have a pressure lamp (Coleman Variety) and one or more "hurricane" lamps (a wick lamp with from 0.5 to 1 liter capacity, most commonly made in Korea or China). The costs of lighting, for an average family, may range from $50 to 250 per year depending on the price of kerosene, their usage, and the costs of lamps and repair parts. The costs of kerosene lighting, over a range usage levels and kerosene prices, has been compared to the costs of a small PV lighting system designed to satisfy similar lighting practices and demands. The results indicate that when a PV lighting system can be financed for approximately 5 years at 10% per year, the required annual payment will be less than the annual costs for kerosene lighting.

Kerosene lighting costs for Papua New Guinea, were studied in detail in 1980 by Kipa Maleva [Ref. 2]. The lighting practices for rural village houses described by Maleva are considered to be similar to kerosene lighting practices in the developing world. He found that, in a rural village, a typical household (4 adults and 6 children) uses one pressurized lamp and one hurricane lamp. At village prices for kerosene of $0.80/liter, which Maleva notes was twice the price for kerosene offered at service stations in Port Moresby, monthly weighted expenditures of 28 households averaged $9.69, or slightly more than 12 liters per month. Capital and replacement parts for lamps averaged $4.90 per month or 50% of the monthly kerosene costs. Using this data, families were spending an average amount of $175/year on kerosene lighting.

As an initial comparison, the capital cost of a 40-Wp PV lighting system including two lamp replacements during the first years is $620. Using a 10 percent discount rate, 5-year financing period and no salvage value for the PV module, the resulting yearly payments of $164 would be less than the yearly costs of kerosene lighting. In actuality, the module would most likely retain a value tied to the current costs of new modules. A more accurate financing period might be 10 years; however it is not felt that loans would be made for that time span by commercial lenders.

The above comparison is limited because it is based on one level of kerosene usage and cost, and it does not consider fuel cost changes or the quality and amount of lighting provided. A more useful comparison is possible by considering the yearly costs of kerosene lighting over a range of usage levels (25 to 150 liters/year) and prices ($0.20 to 1.00/liter). The costs of lamps and repair parts are estimated to be 50% of the cost of kerosene on an annual basis. The lighting level provided by a pressurized kerosene lamp is estimated to be 200 lumens (A lumen is a standard measure of lighting intensity). A kerosene hurricane lamp is estimated to provide from 80 to 100 lumens of light. For a general indication, a 20-watt fluorescent lamp produces on the order of 5 times the amount of light as a pressurized kerosene lamp. At prices for kerosene above $0.75 per liter, the payback for a PV system to operate a 20-watt fluorescent light for comparable periods is less than five years.

Exhibits 6-4 and 6-5 have been constructed to permit rough comparisons between the cost of kerosene lighting to PV-powered lighting. Exhibit 6-4 is used to determine the annualized cost of kerosene lighting as a function of kerosene price and consumption level. The price of kerosene represents a levelized price over the period of analysis, which, in this case, is five years. Using an estimated consumption level, an annualized cost for kerosene lighting

EXHIBIT 6-4 ANNUAL KEROSENE COSTS

(5 YEAR LEVELIZED ANNUAL COSTS)

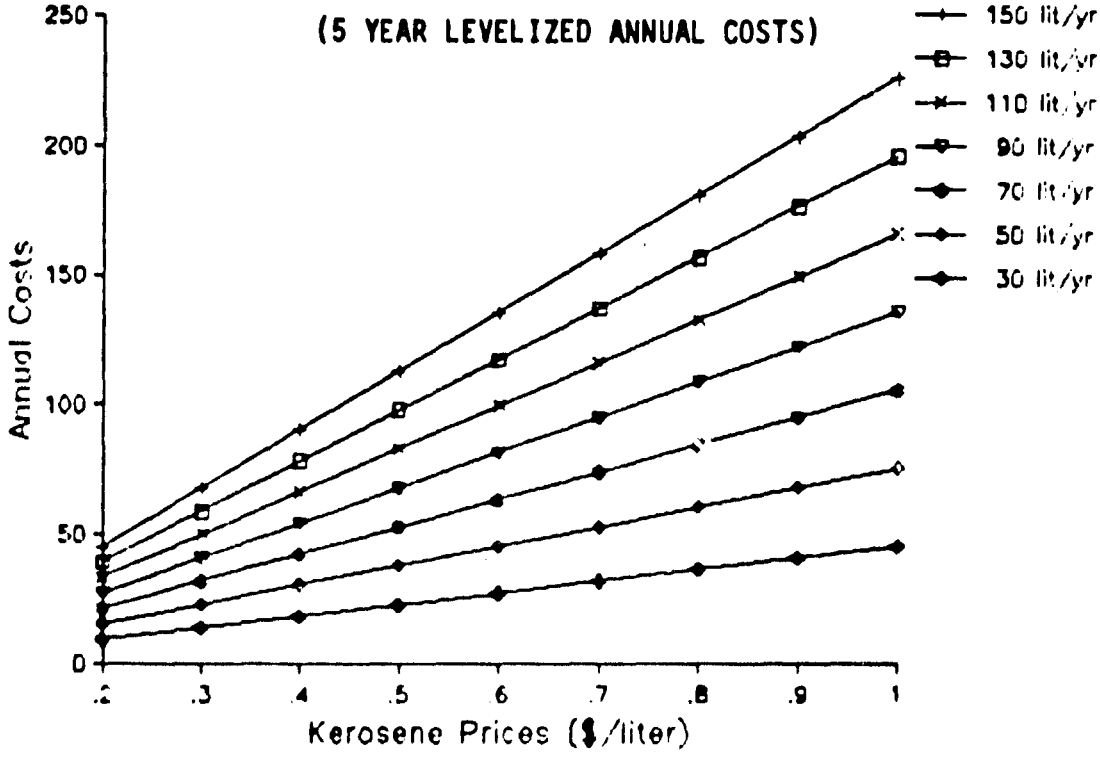

EXHIBIT 6-5 PV SYSTEM COSTS

(30 to 50 Wp, for Nominal 220 Wh/day)

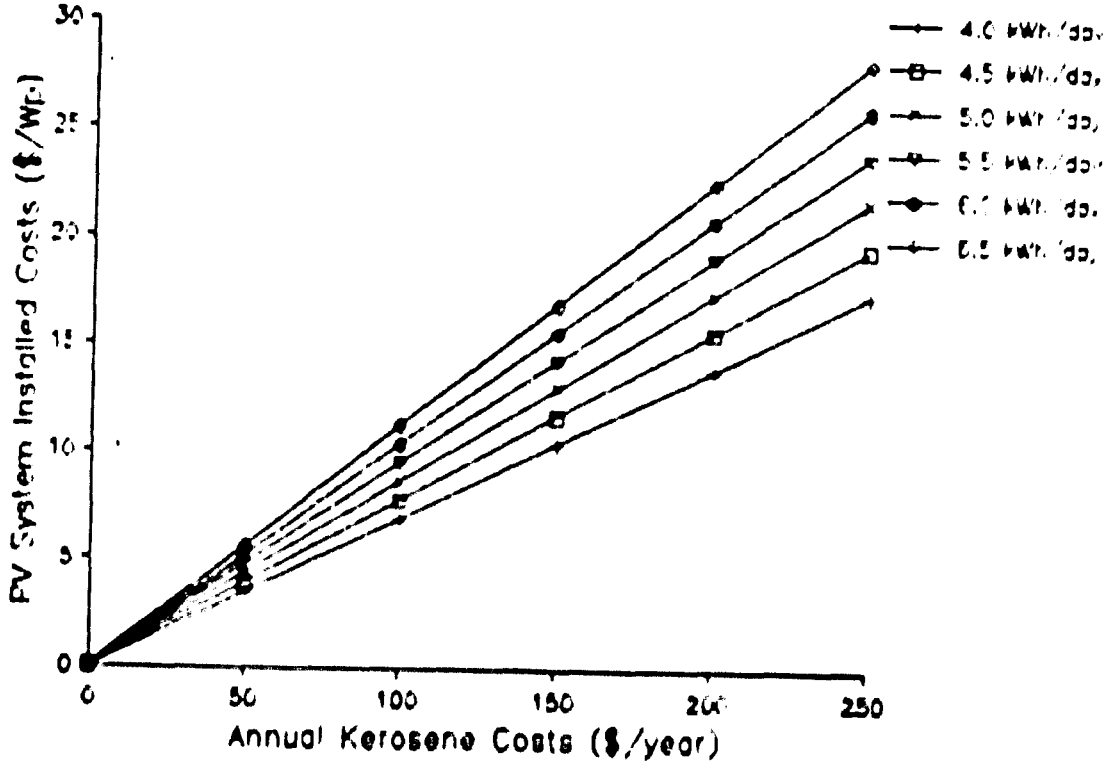

can be calculated. If this cost were applied as an annual payment for a PV system, supplying the same demand, the maximum affordable cost for a PV system could be determined. Exhibit 6-5 uses the annual cost for kerosene to provide the maximum permitted cost of a PV system, as a function of insolation, the financing period and the interest rate. If PV systems can be installed for less than this maximum cost, shorter-term or higher-rate financing can be used or a larger system can be purchased without exceeding the equivalent annual kerosene expenditures. Similar graphs can be constructed using different financing plans and relationships between kerosene price and annualized cost.

In summary, it is apparent that on the basis of existing data on kerosene lighting practices and the associated costs, PV lighting systems are competitive with financing periods of 5 years and interest rates of 10%, where kerosene costs at the village level are $0.75/liter. The degree of competitiveness is a function of kerosene costs, PV system costs, and financing. Each of these factors are highly country- and site-specific. This evaluation shows that PV lighting should be seriously considered on the basis of cost and quality of life benifits.

6.4 KEY FACTORS

The key factors that affect the performance of PV lighting systems are as follows:

- Reliability of charge controllers and DC ballasts
- Spare parts availability and distribution
- Customer financing

6.4.1 The Reliability of Charge Controllers and DC Ballasts

Experience in Papua New Guinea [Ref. 3, 4, 5] is typical of isolated failures experienced with early solid state charge controllers, especially with those installed in tropical environments. Current charge controllers are highly reliable devices, based on number of units installed and the low reported failure rate. Careful attention must be given to the selection of controllers that have had proven records in the environment in which they will be used.

The reliability and efficiency of ballasts used in PV flourescent light systems is an important performance aspect, as the cost of a of DC ballast may represent up to 75% the cost of the fixture. The life and performance of DC ballasts used to operate fluorescent tubes appears to be less than 5 years, based on approximately 60 DC fluorescent fixtures installed as part of the five NASA-Lewis PV Medical Systems [Ref. 6, 7]. A DC ballast manufacturer claims a ballast life of 7 to 10 years. Warranties are valid for one year. Because of the relatively high replacement costs, durability testing under field conditions appears to be warranted. In addition, the development of efficient ballasts for high-pressure vapor lamps is needed and justified according to a report from Mobil Solar Corporation [Ref. 8].

6.4.2 Spare Parts Availability and Distribution

The institutional factor that has the greatest impact on the performance of PV lighting systems is the supply of spare bulbs and ballasts. Cost and in-

frequency of failure preclude a user from stocking his own replacement parts. An infrastructure of spare parts and repair technician support is required for widespread application.

6.4.3 Customer Financing

PV lighting was determined to be cost-competitive with kerosene in Papua New Guinea in 1980 [Ref. 9]. The economic conditions that are necessary for PV lighting exist in many countries. The main deterrent to the growth of PV lighting, however, is consumer financing. At least two governments, French Polynesia and Spain, have established policies for remote rural electrification that subsidize PV lighting and other small power systems either through low-interest loans or direct subsidy.

6.5 REVIEW OF SIGNIFICANT PROJECTS

The following lighting projects have been reviewed in detail for this report:

- Papua New Guinea Lighting Systems
- PV Versus Kerosene Lighting - Papua New Guinea
- Zimbabwe Lighting Systems
- Mali School Lighting
- Questionnaire Responses

6.5.1 Papua New Guinea [Ref. 10]

The field operating experience with PV systems in rural applications in Papua New Guinea has provided important technical and economic conclusions. Charge controllers were found to be complex in circuit design and operation and were unreliable. In 1980, full "tropicalized" charge controllers were made available and have since been proven reliable. A policy has been adopted for village and government patrol post lighting to use 12-volt DC PV lighting systems. The reasons were for safety and reliability. As to the quality of lighting, a 20-watt fluorescent provides a light intensity of 100 lux at one meter below the lamp. A kerosene pressure lamp provides 12 lux, measured one meter below the lamp and outside the lamp's shadow. In addition to these obvious improvements in quality, the high costs of kerosene (about 1 $/liter) result in paybacks of from two-to-four years for simple PV lighting kits.

A number of PV systems have been installed in Papua New Guinea for communications, lighting, water pumping, and medical refrigeration. The total installed capacity in 1982 was approximately 50 kW. Over half of the amount was for telecommunications systems. The remaining systems were for mission radios and lights, mobile radios, village water pumping, and village house lighting. The potential for village house lighting systems over the next 10 years was estimated

at 500,000 single module units (35 watts), or 17.5 megawatts.

In related work, the Appropriate Technology Development Institute of the University of Technology in Lae, Papua New Guinea has started testing fluorescent tube "lanterns" powered by rechargable Ni-Cad batteries. The lanterns are designed to look like their kerosene counterparts but to be charged with PV. A photo is provided in Exhibit 6-3.

6.5.2 PV Versus Kerosene Lighting - Papua New Guinea [Ref. 11]

A survey was conducted among thirty village houses to assess the cost components of kerosene-fueled lighting as experienced in rural villages. The cost and performance of a comparable PV lighting system was analyzed over a five-year period.

A typical household was found to use two kerosene powered lights, a hurricane lamp and a pressurized lamp. The cost of operating these lamps was found to be 196 Kina (1981 prices) for the first year. A five-year expenditure of 817 Kina could be anticipated, using a 10% discount rate.

The comparative PV system was a single ARCO panel (ASI 16-2000), a Delco 2000 battery, a regulator and two 20-watt fluorescent lamps. It was capable of delivering 160 watt-hours/day. The array was guaranteed for five years and the batteries for three years. The installed cost of the PV system in 1981 was 655 Kina.

The following excerpts were taken directly from the reference:

> "...the PVC kit is less expensive to operate over a 5-year period. It would take under five years to recover its cost through savings on kerosene lighting. Undoubtedly this may be too long a period for a villager to pay for a commodity which does not in return derive an income for him, with unknown performance and reliability. However costs alone should not be used to determine the favourability of either of the lighting systems. Hence other comparative criteria are taken into account.
>
> "Quality of Lighting
> ...with the PVC lighting quality at least five time better than the kerosene light there is reason to pay extra money....

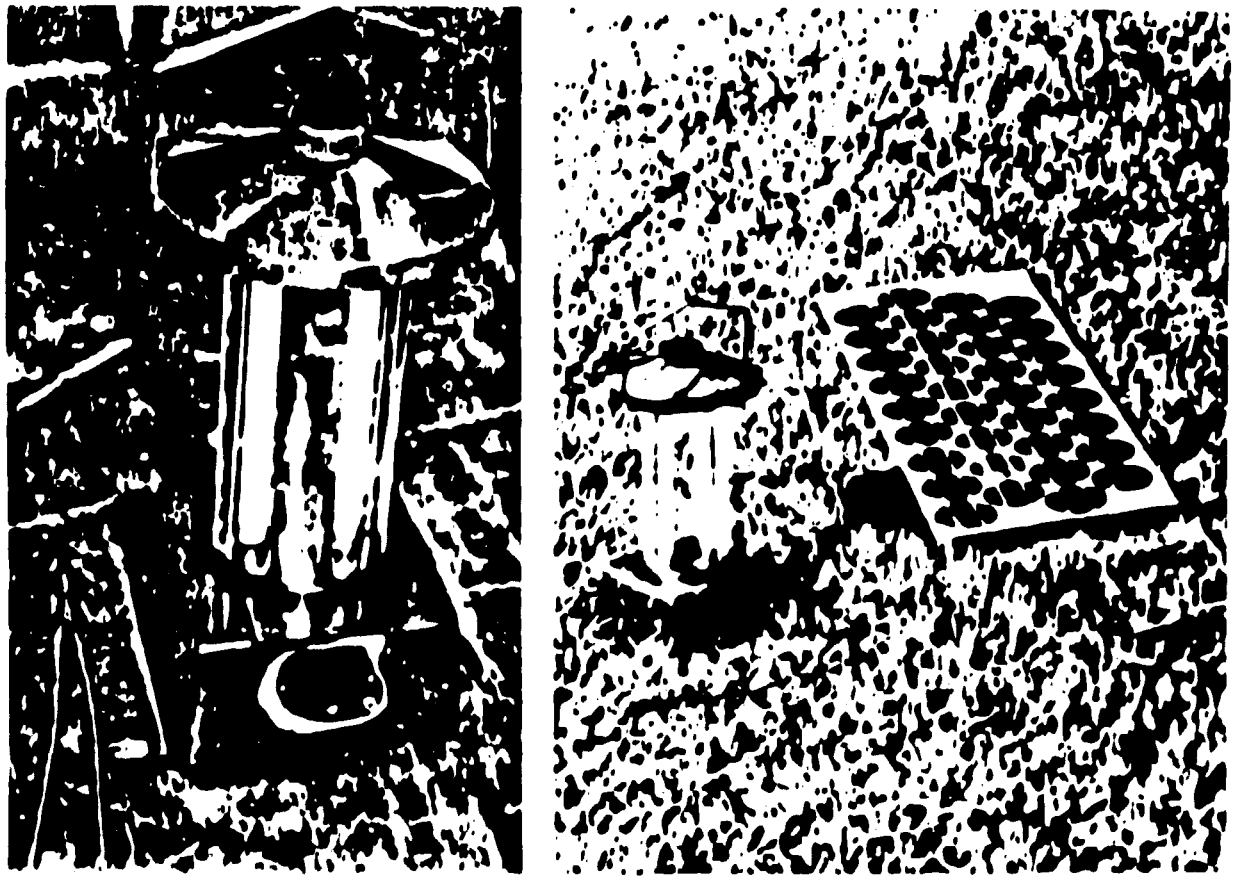

EXHIBIT 6-6 Portable PV-Powered Lantern

"Initial Lighting and Convenience
...the PVC kit merely provides light at the flick of the switch. For the kerosene pressure lamp it takes at least five minutes to refuel the tank, clean the glass and then to actually light it....

"...the costs and benefits are compared [and] it is clear that benefits out-weigh the costs. Thus from a national point of view, the replacement of kerosene lighting of the type described with a PVC kit and hurricane lighting is worthwhile, although the high capital requirement for the PVC kit makes it unlikely that many people will take up the PVC option."

The reference suggests that the government should finance and encourage lending institutions in Papua New Guinea to provide loan opportunities to customers willing to purchase PV kits.

6.5.3 Zimbabwe [Ref. 12]

A 1983 report by PTA Consulting Services of Harare, Zimbabwe was provided by a representative of the Ministry of Energy as an example of the only "serious" work done on the question of the economic viability of PV for water pumping and lighting.

A comparison is made of lighting by candles, gas, or paraffin to a single PV module, battery and two fluorescent lamps (40 watts each). The cost to a family for conventional lighting were between $24 and $144 per year depending on the affluence of the residents. The capital cost of the PV system was $660. Portability of the lamps was stressed as an important design parameter. Six-to-seven year payback periods were noted. Another comparison was made between a 500-watt petrol generator and PV system to supply equal amounts of lighting. The capital cost of $2000 for the PV system was compared to the $550 initial cost and $975 annual running cost of a petrol generator. Payback of less than two years was calculated.

The report does not provide sufficient detail for an analytical critique. However, it is probable that the operating assumptions used for the petrol generator relate more to actual conditions than to ideal.

6.5.4 Mali School Lighting [Ref. 13]

In November 1980, a classroom received fluorescent lighting for use for evening classes. The competing alternative is gas lamps. PV has performed well and with little maintenance; however, the reference stated that despite the risks of bottled gas, the use of PV could only be regarded as an interesting experience. The conclusion reached was that the use of PV cannot be developed further unless there is a substantial reduction in the cost of systems and/or a substantial increase in the budget devoted to rural education.

6.5.5 Traffic Lighting - United Arab Emirates [Ref. 14]

Twenty-one PV-powered street lights and a high-mast, traffic-circle light were installed in June 1983 in Dubai, United Arab Emirates by Mobil Solar Energy Corporation. Each street light consisted of a 20-watt fluorescent tube, two 35-watt modules and a 12-VDC ballast. The high mast light consists of eight 400-W, high-pressure sodium vapor (HPS) lamps powered by a 15-kW array.

During the design of the street lights, five commercially available tubes were tested. The test results showed large differences in efficiency (lumens per watt). The most efficient ballast was chosen. The customer has been pleasantly suprised at the illumination delivered by the 20-W fluorescent systems. The light level is sufficient to read a newspaper while standing on the roadway, 18 feet beneath the lamps. Through the first 10 months of operation, the street lighting performed reliably.

There were initial problems with the HPS light because of the inherent difficulty with operating HPS lamps with modified square-wave inverters. The solution was to use a ferroresonant inverter at 77% efficiency compared to a 90% efficienct, modified square-wave inverter. Development of high-efficiency, high-power, DC ballasts for these lamps was mentioned as vital to optimizing these PV lighting systems.

6.5.6 Questionnaire Responses

Comments from the questionnaires received indicate "negative" comments related most to lamp failures and "positive" remarks concentrated on the cost-competitiveness with kerosene and on the unavailability of other sources of lighting fuel. In general, comments were positive, and lamp failures did not appear to significantly impact the perception that PV-powered lamps are technically and economically viable. Exhibit 6-7 tabulates the comments from the questionnaires.

EXHIBIT 6-7 Questionnaire Comments Lighting Systems

	TECHNICAL			INSTITUTIONAL			
	PV	CONTROL ELECTRONICS	BATTERIES	LAMPS	OPERATION/MAINTENANCE & REPAIR	MANAGEMENT	COST
Belize (Belize Electric & Power)	• Reliability exceptionally good			• Problems in navigational light systems with blue droppings • Problems associated with anticipating meeting rods	• Understanding of limits of PV systems is lacking • Operators are competent		• Systems are privately owned • Restrictive lending/borrowing conditions exist
Botswana (BNPT)	• PV panels seem reliable			• Problems with outdoor lights	• Substantial local participation with installation & start up	• Potential administrative problems with jurisdiction and responsibility	
Indonesia (Dev't. Official)	• Good reliability • All PV systems are running well				• No special maintenance is needed except for batteries • No problems with in-country institutional capability • Conceptual design, installation, and start up done by Indonesian personnel • Operated by villagers		• Lower maintenance cost than conventional energy technologies • High capital cost
Mali (LPMS)			• User problems with battery discharge	• Problems with replacing fluorescent tubes		• Problems with transport and access to remote sites	
Thailand (MEA)			• Problems due to battery life	• Fluorescent lamp in durability problems	• Almost all activities performed by in-country personnel - no problems with capability	• Plans to test acceptance	• PV lighting is competitive with conventional technologies
Yemen Arab Republic	• Some problem with user acceptance due to belief in mountain areas that solar panels account lighting • Excess does provide light	• Difficulties with voltage regulators	• Difficulties with battery protectors		• Requires monthly on-site check-up and monitoring due to faulty battery protectors • Government does not have technical, commercial, nor conceptual background to maintain PV systems		
Zaire (Danish Maternal Hospital)	• System has worked well	• No presence of voltage regulator in system	• Replaced one battery	• Replacements obtained	• Small maternity lighting systems still received		• PV systems are viable due to absence of conventional energy sources
Zimbabwe (Ministry of Energy)	• No problem with PV array			• Defective ballast	• Problems with meeting user demand for extra lights		• Competitive with conventional systems (6-yr payback)
Solar Electric International	• Excellent performance			• 12-V fluorescent lights are extremely reliable			• Kerosene supply is not reliable - PV is most viable

KEY: ○ positive deviation ● negative deviation

114

6.6 LIGHTING REFERENCES

1. Kinnell, G.H.; "Solar Photovoltaic Systems in the Development of Papua New Guinea"; Department of Minerals and Energy, Papua New Guinea; Presented at the Fourth European Solar Photovoltaic Energy Conference; May 1982.

2. Maleva, Kipa; "Feasibility Assessment for Photovoltaic Cells Replacing Kerosene Lighting in Papuan Villages (Gaire Village - Central Province)"; Department of Minerals and Energy, Papua New Guinea; Report No. 7/81.

3. Kinnell, G.H.; "Solar Photovoltaic Systems in the Development of Papua New Guinea"; Department of Minerals and Energy, Papua New Guinea; Presented at the Fourth European Solar Photovoltaic Energy Conference; May 1982.

4. Robinson, Paul; "Waritsian Photovoltaic Scheme"; Department of Electrical and Communication Engineering, University of Technology, Papua New Guinea; Departmental Report No. 13/81.

5. Maleva, Kipa; "Feasibility Assessment for Photovoltaic Cells Replacing Kerosene Lighting in Papuan Villages (Gaire Village - Central Province)"; Department of Minerals and Energy, Papua New Guinea; Report No. 7/81.

6. Ratajczak, Anthony; DeLombard, Richard; Interviews conducted at NASA-Lewis Research Center; March 1985.

7. Slominiski, L.T.; Personal installation experience in five PV medical systems.

8. Ellis, M.F.; "Jebel Ali Hotel PV Lighting Systems"; Mobil Solar Energy Corporation; Presented at the Seventeenth IEEE Photovoltaic Specialists Conference; May 1984.

9. Maleva, Kipa; "Feasibility Assessment for Photovoltaic Cells Replacing Kerosene Lighting in Papuan Villages (Gaire Village - Central Province)"; Department of Minerals and Energy, Papua New Guinea; Report No. 7/81.

10. Kinnell, G.H.; "Solar Photovoltaic Systems in the Development of Papua New Guinea"; Department of Minerals and Energy, Papua New Guinea; Presented at the Fourth European Photovoltaic Solar Energy Conference; May 1982.

11. Maleva, Kipa; "Feasibility Assessment for Photovoltaic Cells Replacing Kerosene Lighting in Papuan Villages (Gaire Village - Central Province)"; Department of Minerals and Energy, Papua New Guinea; Report No. 7/81.

12. PTA Consulting Services; "A Study of Solar Voltaic Power in the Field of Rural Development in Zimbabwe"; Harare, Zimbabwe; March 1983.

13. Chevillard, N.; "Rentabilite et Limites du Solaire"; Afrique Industrie; March 1985.

SECTION 7.0

VILLAGE ELECTRIFICATION

Village electrification has been considered an important potential application for PV because of the number of unelectrified remote villages in the developing world. A number of projects have been implemented, ranging from a few hundred watts to over 25 kilowatts. Two basic types of systems have been demonstrated: 1) a "centralized" system (generally AC) providing service to an entire community, and 2) smaller individual household systems (generally DC) that are dedicated to end-use applications such as lighting kits, water pumps, radios, television and radio power. A review of several of these projects, as well as comments received on 33 systems in 7 countries through questionnaires, indicates that the individual, dedicated end-use systems have better performance records and acceptance than centralized systems, especially those that provide AC power.

The key factors that affect the viability of PV power for village electrification have been determined to be: 1) reliable operation of power conditioning equipment (primarily the inverter, but including DC voltage regulators and battery charge controllers); 2) the choice of electrification strategies (centralized versus decentralized); and 3) the comparative costs of conventional and remote power technologies.

The preliminary conclusions, based on the success and acceptance of PV in French Polynesia, Fiji, and Spain with small-scale lighting, communication and refrigeration systems, are that small PV systems are technically, institutionally and most likely financially viable for rural community electrification plans. The experience thus far of the Gabon and the Utirik systems support these technical conclusions. On the other hand, larger centralized AC systems do not appear to offer the same degree of viability due to the requirement for an existing infrastructure to manage the power facility, collect revenue, and trouble-shoot inverters.

7.1 APPLICATION DESCRIPTION

Village electrification systems power a variety of end-use components such as pumps, refrigerators and communication equipment. As such, village electrification systems incorporate both the positive and negative aspects of the individual applications. The distinction between a village electrification system and one that provides, for example, only lighting and pumping lies mainly in the administrative infrastructure that surrounds the system. For example, village electrification systems generally involve distribution, metering and billing systems and/or wide-scale electrification of a single community.

The viability of PV village electrification is being debated in the larger context of rural electrification. In particular, two strategies are receiving the most attention--one centralized system for an entire village versus many small individual household systems [Ref. 1]. The centralized systems have been more widely publicized, as typically they have been significant projects of development organizations.

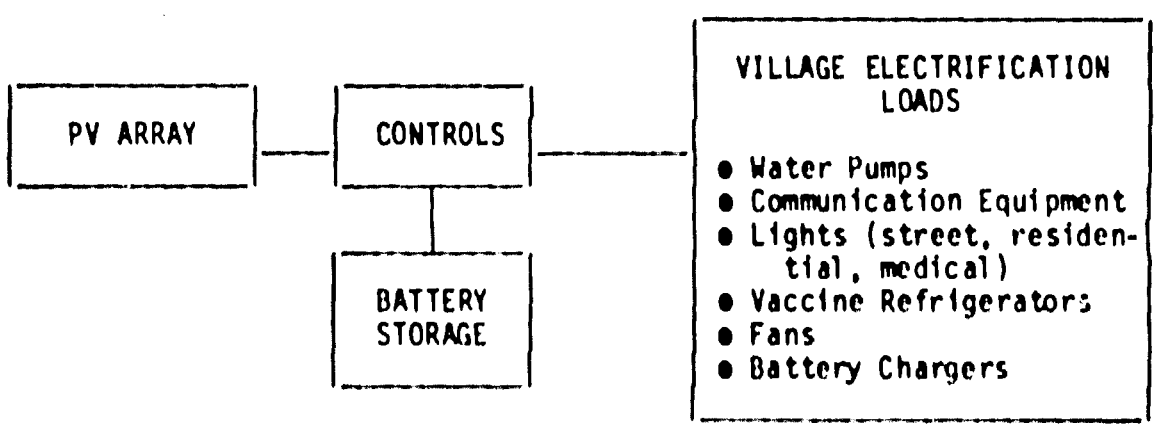

EXHIBIT 7-1 Basic Components of a PV-Powered Village Electrification System

Exhibit 7-1 is a schematic of a village electrification system that is typical of both the centralized and dispersed systems. The difference between

the two system types is in the magnitude of the array, the use of DC versus AC loads (and hence the need for an inverter and its added complexity), instrumentation, battery storage and loads.

7.2 CURRENT DESIGNS AND COSTS

There are no commercially marketed PV-powered "village electrification" systems. A series of demonstration projects form the foundation for considering current designs for village electrification systems. Experience from past photovoltaic projects points to decentralized DC power systems rather than more centralized AC power systems for rural electrification. The technical and institutional factors surrounding this issue are discussed in other sections of this chapter. It is perhaps sufficient to state that DC/AC inverters have had a miserable performance record in developing countries and that the infrastructure to centrally manage a remote village power system does not exist at this time. A typical list of loads is provided in Exhibit 7-2, referenced from a report by Michael Starr that discusses the economic performance of small decentralized power systems for rural electrification.

EXHIBIT 7-2 Typical Electric Loads for Rural Households [Ref. 2]

Load	Power (W)	Duration (hrs/day)	Energy (Wh/day)
Lights 3 x 20 =	60	5	300
Fans 2 x 60 =	120	8	960
Television	60	4	240
Radio/cassette	10	5	50
Total	250		1550

A PV system to provide these loads would need to produce approximately 2 kWh/day, accounting for control, battery, and related losses and inefficiencies. A nominal PV array size to supply 2 kWh/day in a 6 kWh/m^2-day solar resource would be approximately 350 Wp. Battery storage capacity of 2 days and maximum depth-of-discharge limited to 50% is equivalent to 6.2 kWh of storage (1.55 kWh/day x 2 days ÷ 50% DOD). This corresponds to evening operation and minimal backup during periods of low insolation. Presumably, individual households would accept

some periods of energy conservation compared with the costs associated with higher system availability.

The installed price for such a system in 1985 is approximately $15/Wp, including loads. It is estimated that, for volume orders, a price of $13/Wp could be obtained, assuming user installation under minimal supervision. This would represent a capital cost outlay of $4550. Assuming the consumer puts down 10%, and obtains financing for the remaining portion at 10% interest for 10 years (note that the modules are the highest cost item and have a guarrantee of 10 years), the annual payment would be $666 or $55/month. In addition to the loan payment, a monthly charge of $5 is applied to cover normal load maintenance (light bulb replacement) and labor for inspecting and cleaning the system. The total cost of energy would be $1.30/kWh. Although this is high, comparative costs for diesel-generated electricity from a 2.5-kW diesel are in the same range (See Section 7.3).

7.3 COMPARATIVE COSTS

Diesel costs are summarized in Exhibit 7-3. Exhibit 7-4 has been developed based on these costs and on the PV system design and financing plan described in Section 7.2.

Exhibit 7-3 Diesel Costs (2.5-kW diesel; 7-year life) [Ref. 3]

	Low Cost	High Cost
Capital Cost ($)	1000	3000
Fuel Cost ($/gal)	1.50	3.00
Operating Efficiency	0.20	0.15
O & M ($/year)	200	400

For the PV system, the life of the batteries is 10 years--equal to the PV array. It is conceivable that a financing program could be designed to permit the PV array costs to be carried over a longer period (e.g., 20 years) while the BOS, including the battery, be financed over 10 years. The purpose of such a scheme would be to lower the consumer's monthly payments.

An examination of Exhibit 7-4 shows that for good solar resource areas and for diesel capital costs above $1500, PV power systems are competitive with diesels for loads up to 2.5 kWh/day. Comparisons to gasoline engines, which are available in smaller power ratings than diesels, would show the cut-off for PV cost-competitiveness to be at lower daily energy loads, owing to the reduced capital costs for the gasoline engine.

In summary, it appears from this rough analysis and from the experience worldwide, that small decentralized PV power systems are becomming a marketable commodity for rural populations.

EXHIBIT 7-4

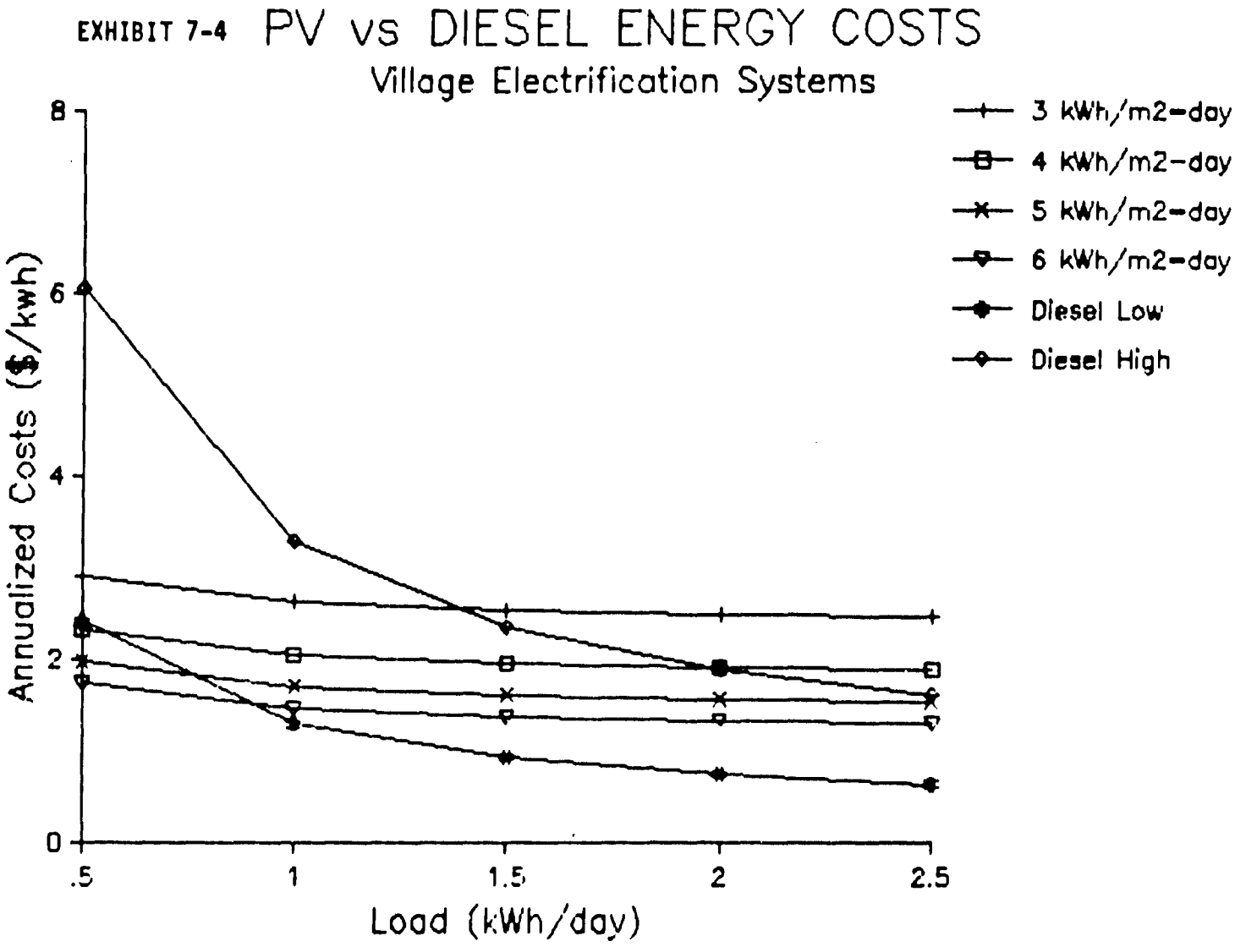
PV vs DIESEL ENERGY COSTS
Village Electrification Systems
3 kWh/m2-day
4 kWh/m2-day
5 kWh/m2-day
6 kWh/m2-day
Diesel Low
Diesel High
Annualized Costs ($/kwh)
8
6
4
2
0
.5
1
1.5
2
2.5
Load (kWh/day)

7.4 KEY FACTORS

The following items represent the most significant factors in the performance and viability of PV for village electrification today.

- Power conditioning reliability
- Small decentralized versus larger centralized systems
- Comparative costs of conventional technologies

7.4.1 Power Conditioning Reliability

The most significant technical factors have been the reliability and complexity of the power conditioning subsystems, not the performance of the PV. Failures in inverters and, to a lesser extent, in battery charge regulators have been a problem in several systems. Some problems have been related to quality control and most likely would have been discovered had "burn-in" testing been performed. Other problems have been related to environmental factors (e.g., heat and humidity) or user operating errors. For all inverters and controllers, only proven equipment should be selected. Factory testing should be included as part of the purchase specifications. Referring to operator errors, complex operating procedures and oversophistication of meters and diagrams associated with inverters and controllers placed in developing countries have been a problem. Although state-of-the-art equipment is moving toward more simple design, there is still room for improvement. As for the technical performance of the end-use components, refer to the chapters on the other applications.

7.4.2 Small Decentralized Versus Larger Centralized Systems

The decision to procure one centralized system or many dispersed systems is a key policy issue [Ref. 4]. Traditionally, centralized systems have been preferred by funding organizations since their performance is more easily monitored. However, some governments, such as Papua New Guinea and French Polynesia, have made commitments to promote small individual systems. These

small systems do not require a distribution system throughout the village; they do not need metering systems; system failures impact one household, not the entire community (failures are more common in central systems as a result of overloading due to unauthorized connections); and they can be mounted on roofs, rather than dedicating valuable land to a large system. The management of power is much more complex in a centralized system, as the interests of the entire community must be integrated. However, centralized systems develop a sense of community. With either type system, an infrastructure must be developed to support the repair and supply of spare parts. Either type of system would require some administrative support--a billing system in the case of the centralized system or a financing program in the case of individual systems involving subsidies such as those typically provided for other energy technologies.

7.4.3 Comparative Costs of Conventional Technologies

Comparative life-cycle cost analyses of PV-powered systems to conventional power have most commonly been performed for larger systems. Most reports find that diesel remains the competitive choice. Capacity factors, administrative costs, technical support and billing efficiency are a few of the serious issues that influence village electrification costs for both energy technologies. On the other hand, small decentralized systems, as analyzed in Section 7.3, may provide service at a lower cost than diesel or PV central systems, due to the virtual absence of the issues mentioned above. The centralized systems have lower initial capital costs than the dispersed systems. However, it appears that over the lifetime of the systems, once administrative and operational problems are factored in, the individual systems cost less [Ref. 5].

The success and acceptance of small PV systems in Fiji, French Polynesia, Papua New Guinea and Spain for DC lighting, communications, and refrigeration

viable for rural communities. Furthermore, a significant part of the purchase and operating costs associated with these systems is covered by the users themselves.

7.5 REVIEW OF SIGNIFICANT PROJECTS

Village electrification projects at the following locations have been reviewed in detail for this report:

- Tunisia
- Gabon and the Marshall Islands
- Basaisa Village - Egypt
- Charsarati, West Bengal, India
- Niaga Wolof Energy Centre - Senegal
- French Polynesia

7.5.1 Tunisia [Ref. 6, 7, 8]

A village electrification project of PV, wind, and solar heating has been operating since February 1983. The PV system consists of a 29-kW, 220-volt, 50-Hz system to serve public and commercial sectors of a village of 120 persons. Additionally, a 1.4-kW remote farm system for lighting, R/F, TV and radio and two 1.4-kW drip irrigation systems were installed. Operation and evaluation is the responsibility of the Societe Tunisienne de L'Electricite et du Gas (STEG). There is very little instrumentation on the system, although there are kilowatt-hour meters on the system and for individual users. Users are billed for specific consumption. Project participants believe that STEG has been recording basic production data.

There have been inverter failures. Some array wiring has deteriorated due to abrasion and sunlight damage. It is suggested that the wrong wire sheathing was specified or procured.

7.5.2 Gabon and the Marshall Islands [Ref. 9, 10, 11, 12]

Significant village electrification projects have been performed by NASA-Lewis Research Center over the last two years. These are a 27-kWp system in Tunisia (see previous project review), an 8-kWp, 120-VDC system in the Marshall

Islands on Utirik Atoll, and a series of 17 separate community service DC systems in Gabon for water pumping (0.7 - 3.2 kWp), education (560 Wp), community light (80 Wp), and a health dispensary (640 Wp). The Utirik Atoll system and the Gabon systems became operational only recently--in 1984 and 1985, respectively. So far, both PV systems have had 100 percent availability. Minor problems have occurred with control systems in Gabon and with street light inverter ballasts in the Utirik system. The Gabon system is heavily instrumented, and collected data over the next few years will provide a valuable indicator of that system's overall performance.

7.5.3 Basaisa Village - Egypt [Ref. 13, 14, 15]

A PV village electrification system was introduced in Basaisa in November 1977 under the sponsorship of the American University in Cairo and the National Science Foundation. The initial 33-Wp system powered a 12-inch screen black and white television, a 12-V radio cassette recorder and a 12-V manual slide projector. The storage system consisted of a 12-V car battery. In December 1978, another 33 Wp was added to power a 12-V loudspeaker and a 12-V, 60-W emergency light. In 1981, solar pumps were added for irrigation.

The village has established a community cooperative, community club, technical center and community clinic. A fee is charged for membership in the cooperative or club. Members of the cooperative may use the community AV, emergency light and irrigation pumps. Members of the club may use the TV, AV equipment and light. The technical center uses the AV equipment and pumps. The clinic uses the light. Members of the cooperative and club must pay rent for the pumps and AV equipment during times of use.

As of September 1983, the system was operating satisfactorily. The initial pump that was used in the system was not designed well for the given application--low lift pumping. However, a new pump was developed and was in

use as of September 1983. Operation and maintenance activities include cleaning the array every two weeks and monitoring battery state-of-charge with a multimeter and hydrometer.

Operation, maintenance and repair is performed by volunteers in the community. In the case of system breakdowns, the villagers first attempt to correct the situation themselves; the project team only intervenes if the villagers cannot fix the system. The energy cooperative not only provides for the basic energy needs of the community but it also establishes an educational atmosphere and a type of community spirit. There has not been much conflict over the use (and scheduling of the use) of the various equipment. Some farmers still prefer using their animals to carry water for irrigation rather than the PV-powered pumps.

7.5.4 Charsarati, West Bengal, India [Ref. 16]

In December 1980, a 200-Wp PV system was installed to power a community center. One of the main functions of the center is to provide adult education. The loads for this system include a 65-W television, two 40-W fluorescent lamps and one 20-W fluorescent lamp. A DC-DC converter (24-110V) is used for the television, and an inverter (24VDC-150VAC) is used for the lamps. Storage consists of two 12-V, 120-Ah lead-acid batteries. In October 1981, a 300-Wp water pumping system was installed for irrigation. The pump is a DC centrifugal rated at 96 V and 400 W. A maximum power point tracker and five 42-V, 60-Ah lead-acid batteries are included in the system. This project was originated and is administered by the University of Kalyani. All modules were supplied by CEL.

As of 1984, the system seemed to be operating smoothly. The principal investigator of PV projects at the University of Kalyani feels PV systems have been proven technically feasible in India. In this project, some modules failed after three years due to cracking of cell interconnections. Motor-pump

set problems were encountered, mainly with the carbon seals and commutators.

In 1984, the community center was economically viable. BOS costs (per peak watt) are less in India than in the U.S., due to cheap labor. The cheaper BOS costs allow for the use of low efficiency (5%) solar cells.

This project has generated "tremendous enthusiasm," even attracting people from neighboring villages in the evenings. The villagers manage security, operation and maintenance on a cooperative basis. There have been problems when modules have failed in that they could (as of 1984) only be replaced by physically taking them physically to CEL.

7.5.5 Niaga Wolof Energy Centre - Senegal [Ref. 17]

Niaga Wolof is a village of 1500 inhabitants. In February 1983, a PV-Wind hybrid system (5 kW PV; 4.5 kW Wind) began powering a public lighting system. In April 1983, a water pump (20 to 25 m^3/day) was connected to the system. The system was officially considered operational in January 1984, after 9 months of preliminary tests. By January 1984, the system also powered two refrigerators and two fluorescent tubes. The system is intended to also eventually supply residential lighting, a communal TV, carpentry and sewing equipment, a grain mill and an ice maker.

As of October 1984, no problems with the PV portion of the system had been reported. According to the reference, the system has "confirmed the reliability of photovoltaic solar energy." The system has also demonstrated that a full-time system operator is not necessary and that periodic inspections suffice.

The cost-competitiveness of this system versus diesel has not been determined yet since the grid is still undergoing expansion and more accurate instrumentation is needed.

The system is located near Dakar and is thus close to technical support. Users of the system are billed according to an established tariff structure.

Residences are billed at the cheapest rate. A tourist center in the village is charged a higher rate.

7.5.6 French Polynesia [Ref. 18, 19]

The activity in PV applications in French Polynesia is significant. Over 1000 home power systems have been installed to provide lighting, television, and fans for individual houses. The efforts are supported by the French Atomic Energy Commission (CEA), the French Agency for Energy Management (AFME) and the Government of French Polynesia. The program in which systems are being provided is similar to that practiced worldwide for rural electrification--subsidization. Studies as long ago as 1980 showed that it would be more cost-effective to support the introduction of PV power systems than to extend the grid.

A typical system consists of three 13-watt lights, an 80-watt television, fan, and small refrigerator. The cost of the system is approximately 17,600 Ff ($2000), including taxes. The modules are 50 percent subsidized by the program. End-users can pay the balance up-front or over a five-year period at 9 percent interest. The conclusions of the recent work are that PV is economically justified where the user is more than 200 meters from the grid. By 1982, 50 kW (representing 300 huts) had been installed under this program. Another 120 kW were expected in 1983, representing 25 percent of French PV production at that time. The South Pacific Commission was encouraged by this program and has proposed the development of such a rural electrification scheme throughout the South Pacific.

7.5.7 Questionnaire Responses

Comments in the questionnaires reflect the reliability of photovoltaic arrays and the problems associated with inverters. Exhibit 7-5 tabulates responses under each area of evaluation and denotes them as being positive or negative.

EXHIBIT 7-5 Questionnaire Comments Village Electrification Systems

	TECHNICAL				INSTITUTIONAL		
	PV	BATTERIES	POWER CONTROL UNITS	END-USE DEVICES	OPERATION/MAINTENANCE & REPAIR	MANAGEMENT	COST
Belize (Robert Wheldall & Assoc.)	⊕ Reliability exceptionally good						⊕ Competitive life time costs at low power levels (lighting and T.V.)
Botswana (SIERRA/WITAU)[1]	⊕ Good reliability		● Inverter problems		● Limited repair expertise with inverter		
Lesotho (Senekane's Solar Systems)	⊕ Reliability generally excellent - PV is better than estimated		● Worst problems are with electromechanical load shedding type regulators -- Best regulator is educated consumer	● Users lack understanding of end-use energy consumption and how this affects system sizing and behavior ⊕ Excellent light made locally	⊕ Virtually no maintenance ⊕ Trained local staff	⊕ No unsolvable problems to date	⊕ Cost of getting to remote locations is a problem ⊕ Small systems are very viable ● No data on life-cycle cost
Senegal (SIERER)	⊕ PV array is very reliable						
Kyocera International	⊕ Performance and reliability of PV modules is excellent	⊕ Performance and reliability of batteries is excellent			● Problems with good servicing and spare parts		
Matours Leroy Somer			● Problems occurred with inverter, back-up generating set measurement system (data logging)		● Impossible to repair a PWM inverter locally		
Senegal (not indicated)	⊕ In good functioning order ⊕ System performance satisfactory	● Two battery elements exploded	● Problem with power cord of inverter		⊕ Installation done by Senegalese organization SINAES[2] ⊕ SENELEC responsible for use and maintenance ⊕ Maintenance only consists of cleaning modules & equalizing charge of batteries every 4 months ⊕ No problems with in-country institutional capability	⊕ No problem with acceptance	⊕ No operating costs (i.e., no operator is required)
Solarex Pty. Ltd.	⊕ PV systems are very reliable	● Electrolyte replacement is required in the battery bank after 2 yrs. in operation. ● Battery is weakest portion of PV system	● Minor problem developed in the inverter working voltage supply due to heat and humidity	⊕ End-use devices powered satisfactorily since installation	● Repairing inverters is a problem in remote areas -- technical expertise is not available ● Problems with replacement delays		● Initial cost and rates of return on investment are still unacceptable
Sollec International	⊕ PV module reliability has been excellent		● Over heated charge controller resulted when array performed better than the designed output ● Problems with defective charge regulators			● Fence needed around array to prevent unqualified persons from damaging equipment	
United Nations	⊕ Reliability has been good						

KEY: ⊕ positive demotation ● negative demotation

1. Building power system (5.3 kW)

2. Industrial Society for Application of Solar Energy (SINAES)

7.6 VILLAGE ELECTRIFICATION REFERENCES

1. Starr, Michael R.; "Photovoltaic Prospects for Rural Electrification"; Oxon, United Kingdom; Presented at INTERSOL 85; June 1985.

2. Ibid.

3. Detailed system cost range based on reports by D. Danley, R. McGowen, and IT Power and Sir William Halcrow & Partners; a verbal quotation from Alban Engine Company; and questionnaire responses. (See Section 2.6 for detailed citations)

4. Starr, Michael R.; "Photovoltaic Prospects for Rural Electrification"; Oxon, United Kingdom; Presented at INTERSOL 85; June 1985.

5. Darkazalli, Ghazi; Scudder, Larry; and Rangarajan, Anand; "Design and Installation of 3 Photovoltaic Village Power Systems in Tunisia"; Solar Power Corporation, NASA Lewis Research Center and TriSolar Corporation.

6. Darkazalli, Ghazi; "Village Power in Tunisia"; Photovoltaics International; June/July 1983.

7. Bifano, William J.; DeLombard, Richard; Ratajczak, Anthony F.; and Scudder, Larry R.; "Status of DOE and AID Stand-Alone Photovoltaic System Field Tests"; Presented at the Seventeenth IEEE Photovoltaic Specialists Conference; May 1984.

8. Ratajczak, Anthony; "NASA/LeRC International Photovoltaic Systems Summary"; Briefing to the World Bank; June 13, 1985.

9. Kaszeta, William J. and Ratajczak, Anthony F.; "Experience with a Village Power Project in the Republic of Gabon"; Solavolt International and NASA-Lewis Research Center; Presented at INTERSOL 85; June 1985.

10. Rosenblum, Louis; "Photovoltaic Power Systems for Rural Development in Gabon"; Presented to the President of the Republic of Gabon; February 1980.

11. Hughes Aircraft Company; "Village Electrification of the Utirik Atoll in the Marshall Islands."

12. Arafa, S.; "Communal Solar Photovoltaic Systems for Rural Areas"; Energy for Rural and Island Communities III - Proceedings of the Third International Conference Held at Inverness, Scotland; September 1983.

13. Arafa, Salah; "Solar Cells Application in Egypt's Rural Areas"; The American University in Cairo; Presented at the 1st International Photovoltaic Science and Engineering Conference; Kobe, Japan; November 1984.

14. Lesnick, Peggy; "Residential Applications in Egypt -- A Successful Integration of Tradition and High Technology"; Photovoltaics, The Solar Electric Magazine; July/August 1983.

15. Saha, P. and Basu, P.; "A Report on the Project Entitled Photovoltaic Solar Electric Power System for Rural Development at University of Kalyani, West Bengal"; University of Kalyani, West Bengal, India; Presented at the National Solar Energy Convention 1984.

16. Ministry for Scientific and Technical Research, Republic of Senegal; Agence Francaise pour la Maitrise de l'Energie; United Nations Environment Programme, Nairobi; "The Niaga Wolof Energy Centre"; October 1984.

17. Malbranche, Philippe; Agence Francaise pour la Maitrise de l'Energie; conversations during INTERSOL 85; June 1985.

18. Jourde, Patrick; "French Polynesia Already in Solar Age"; GIE Soler; Presented at the Sixth European Photovoltaic Solar Energy Conference; April 1985.

APPENDIX A
SUMMARY OF QUESTIONNAIRE RESPONSES

APPENDIX A
SUMMARY OF QUESTIONNAIRE RESPONSES

This appendix includes statistical information on the questionnaires (Exhibit A-1); copies of the two questionnaires that were distributed; a Questionnaire Summary Response Table (Exhibit A-2); a listing of all projects referred to in the questionnaires; and a reference list of the persons or organizations who responded to the questionnaires.

Questionnaires were sent to over 300 individuals, organizations, and government agencies for the purpose of collecting PV project field performance experience. Two similar questionnaries, labled "Project Field Questionnaire" and "Project Questionnaire," were sent to two basic participant groups: end-users and manufacturers. The end-user group included USAID Missions. Missions were requested to distribute the questionnaire to pertinent host-country individuals, organizations, and government agencies that may have direct field experience with photovoltaic applications.

The "field" questionnaire concentrated on questions pertaining to user acceptance, institutional performance, and incountry costs for conventional fuels. It was also directly sent to specific key individuals and organizations in developing countries who had been identified as having significant field experience.

The "project" questionnaire was directed at manufacturers in both developed and less developed countries in order to solicit field experience an current cost information on PV systems.

Exhibit A-1 details response statistics as of September 30, 1985. The USAID Mission response, if considered separately, was 40%.

Exhibit A-1 Questionnaire Statistics

	Field Questionnaire	Project Questionnaire
# Sent	162	141
# Undeliverable	0	6
Effective # Sent	162	135
# Answered Through Interview	1	2
# Returned	36	22
Effective # Returned (% of eff. # sent)	37 (23)	24 (18)

PV PROJECT FIELD QUESTIONNAIRE

To the person filling out this questionnaire: please provide the following information.

Your Name _____

Mailing Address _____

_____

_____

Telephone No. (if available) _____

Telex No. (if available) _____

Position _____

Role with Respect to PV System or Project _____

_____

Please fill in the following questionnaire to the best of your ability, or pass it to the appropriate individual. If you feel you cannot answer a question please write in "Do Not Know" or "DNK"

I. PROJECT DESCRIPTIONS

Please provide a simple description of photovoltaic projects in your country. Describe PV systems which represent the general design and observed performance of systems in each of these application areas: water pumping, grain grinding, refrigeration (vaccines), communication, lighting, village electrification, and water desalinization and purification. Explain the purpose of the system (such as demonstration, R&D, training, commercially viable, etc.). Where possible, reference or provide reports on specific projects.

1. Project Title/Location _____

   Application _____

   Purpose _____

   Sponsoring/Funding Agency _____

   In-Country Participating Agency _____

   Installation Date _____ Equipment Supplier _____
   PV Array Size _____ Watts

   Current Status of System: Working _____ Not Working _____

   Explain: _____

   _____

2. Project Title/Location _____

   Application _____

   Purpose _____

   Sponsoring/Funding Agency _____

   In-Country Participating Agency _____

   Installation Date _____ Equipment Supplier _____
   PV Array Size _____ Watts

   Current Status of System: Working _____ Not Working _____

   Explain: _____

   _____

3. Project Title/Location _____

Application _____

Purpose _____

Sponsoring/Funding Agency _____

In-Country Participating Agency _____

Installation Date _____ Equipment Supplier _____
PV Array Size _____ Watts

Current Status of System: Working _____ Not Working _____

Explain: _____

_____

4. Project Title/Location _____

Application _____

Purpose _____

Sponsoring/Funding Agency _____

In-Country Participating Agency _____

Installation Date _____ Equipment Supplier _____
PV Array Size _____ Watts

Current Status of System: Working _____ Not Working _____

Explain: _____

_____

5. Project Title/Location _____

Application _____

Purpose _____

Sponsoring/Funding Agency _____

In-Country Participating Agency _____

Installation Date _____ Equipment Supplier _____
PV Array Size _____ Watts

Current Status of System: Working _____ Not Working _____

Explain: _____

_____

II. PERFORMANCE OF SYSTEMS

A. Technical

What has been the observed technical performance of photovoltaic energy systems installed in your country? Consider and describe experiences in each major application area. Where possible, explain both problems and positive experiences with systems and individual components such as PV array, batteries, controls, instrumentation, and loads (pumps, refrigerator, lights, grain mills, radios, etc.). Use additional paper if necessary.

1. Reliability _____

_____

_____

_____

2. Operating Performance (If possible provide specific performance data such as amount of water pumped and head, grain ground, number of vaccinations, etc. for example systems.) _____

_____

_____

_____

3. Maintenance and Repair _____

_____

_____

_____

4. Have any problems emerged with user acceptance of PV systems? _____

_____

_____

5. Have any problems been experienced that relate to in-country institutional capability (technical and administrative) to operate and repair remote photovoltaic systems? _____

_____

_____

B. Financial

To the extent possible, please provide the financial data specified below. Use any recognized currency and provide currency year (for example, 1980 dollars). Please be as detailed as possible and identify those numbers that are estimates. When data is not available in the units indicated, please provide any relevant information. For example, "Currently a Honda 400 Generator Model MD-4 is $900.00" or "10 liters of diesel fuel cost 12 Zimbabwe dollars in Harare in May 1984" or "40 Watt PV modules in Gaborone are $396.00 (U.S.)."

1. If available, what is the current commercial capital cost of PV power in your country? (Modules, packaged system costs, by application, etc.) Use recent projects (within the last year) as examples if necessary _____

_____

_____

2. What operating costs are associated with PV systems (number of persons, capability and pay, rate, hours/months in operation or support)? _____

_____

_____

3. What is the monetary value of the following products in rural areas of the country?

   - o Water (from what depth?) _____.
   - o Ground grain (what grain? grinding costs only.) _____
   - o Electricity (from what source? organization?) _____

4. Comparative energy costs in rural locations (circle correct units)

   Electricity _____ per kilowatt-hour

   Diesel Fuel _____ per liter or gallon

   Kerosene Fuel _____ per liter or gallon

   Gasoline Fuel _____ per liter or gallon

   Wood _____ per pound or kilogram

   Human Labor _____ per day or hour (indicate type of work)

   Animal Labor _____ per day or hour (indicate type of work)

5. Capital costs and expected lifetime for other technologies:

Diesel Engines: Cost _____ Size _____ Expected Lifetime _____

Gasoline Engines: Cost _____ Size _____ Expected Lifetime _____

Portable Generator: Cost _____ Size _____ Expected Lifetime _____

Kerosene Lamps: Cost _____ Size _____ Expected Lifetime _____

Refrigeration (kerosene): Cost _____ Size _____ Expected Lifetime _____

Water Pumps: Cost _____ Size _____ Expected Lifetime _____

6. How does PV compare on a life-cycle cost basis to other remote energy technologies in use in your country? (Provide portions of recent energy/economic analyses. Where such data are not available, perception and justification are requested.) _____

_____

_____

_____

C. Institutional

1. How have local communities received the installation and use of PV systems?

_____

_____

_____

2. To what extent have in-country personnel and local operating staff participated in the conceptual design, installation and start-up of PV systems?

_____

_____

_____

3. Based on the observed or perceived technical, institutional, and cost performance of PV energy systems, what is the current viability of PV for remote energy supply in each area of application in your country?

_____

_____

_____

D. General Comments

_____

_____

_____

_____

_____

_____

_____

_____

Your cooperation and assistance in filling out this questionnaire is greatly appreciated. Please indicate below if you wish to receive a summary of the resulting report and to whom it should be addressed.

Yes _____ No _____

Address _____

_____

_____

_____

PV PROJECT QUESTIONNAIRE

To the person filling out this questionnaire: please provide the following information.

Your Name _____

Mailing Address _____

_____

_____

Telephone No. (if available) _____

Telex No. (if available) _____

Title/Position _____

Role with Respect to Specific PV Systems or Projects

1. _____
2. _____
3. _____
4. _____
5. _____
6. _____

Please fill in the following questionnaire to the best of your ability, or pass it to the appropriate individual.

I. PROJECT DESCRIPTIONS

Please provide a description of significant photovoltaic projects with which you or your company have had direct field experience. Select and describe PV systems which represent the general design and field performance of systems in each of these application areas: water pumping, grain grinding, refrigeration (vaccines), communication, lighting, village electrification, and water desalinization and purification. Explain the purpose of the system or project (such as demonstration, R&D, training, commercially viable, etc.), and where possible, reference or provide reports and contacts for specific projects.

1. Project Title/Location _____

   Application _____

   Purpose _____

   Sponsoring/Funding Agency _____

   In-Country Participating Agency _____

   Installation Date _____ Equipment Supplier _____
   PV Array Size _____ Watts

   Current Status of System: Working _____ Not Working _____

   Performance Details: _____

   _____

   _____

2. Project Title/Location _____

   Application _____

   Purpose _____

   Sponsoring/Funding Agency _____

   In-Country Participating Agency _____

   Installation Date _____ Equipment Supplier _____
   PV Array Size _____ Watts

   Current Status of System: Working _____ Not Working _____

   Performance Details: _____

   _____

   _____

3. Project Title/Location _____

Application _____

Purpose _____

Sponsoring/Funding Agency _____

In-Country Participating Agency _____

Installation Date _____ Equipment Supplier _____
PV Array Size _____ Watts

Current Status of System: Working _____ Not Working _____

Performance Details: _____

_____

_____

_____

4. Project Title/Location _____

Application _____

Purpose _____

Sponsoring/Funding Agency _____

In-Country Participating Agency _____

Installation Date _____ Equipment Supplier _____
PV Array Size _____ Watts

Current Status of System: Working _____ Not Working _____

Performance Details: _____

_____

_____

_____

5. Project Title/Location _____

Application _____

Purpose _____

Sponsoring/Funding Agency _____

In-Country Participating Agency _____

Installation Date _____ Equipment Supplier _____
PV Array Size _____ Watts

Current Status of System: Working _____ Not Working _____

Performance Details: _____

_____

_____

_____

6. Project Title/Location _____

Application _____

Purpose _____

Sponsoring/Funding Agency _____

In-Country Participating Agency _____

Installation Date _____ Equipment Supplier _____
PV Array Size _____ Watts

Current Status of System: Working _____ Not Working _____

Performance Details: _____

_____

_____

_____

II. PERFORMANCE OF SYSTEMS

A. Technical

In general, what has been the technical performance of PV systems in developing countries? Consider and describe experiences in each of the major application areas as identified in Part I. Where possible, explain both problems and positive experiences with systems and individual components such as PV array, batteries, controls, inverters, instrumentation, and loads (pumps, refrigerators, lights, grain mills, radios, etc.) according to the technical criteria listed below. Use additional paper if necessary.

1. Reliability _____

_____

_____

_____

_____

_____

2. Operating Performance (Provide specific performance data where possible, such as amount of water pumped and head, grain ground, number of vaccinations, referencing systems described in Section I). _____

_____

_____

_____

_____

_____

3. Maintenance and Repair _____

_____

_____

_____

_____

_____

B. Institutional

1. Have any problems emerged with user or community acceptance of PV systems?

_____

_____

2. Have any problems been experienced that relate to in-country institutional capability (technical and administrative) to operate and repair remote photovoltaic systems? _____

_____

_____

3. To what extent have in-country personnel and local operating staff participated in the conceptual design, installation and start-up of PV systems?

_____

_____

_____

4. Describe any other institutional or user related aspects which were significant to PV system overall performance.

_____

_____

_____

C. Financial (Current System Costs and Performance)

The financial performance of PV systems is principally a function of the installed capital costs and the amount of product produced (life-cycle costing factors being held constant). The changing nature of the world wide PV industry precludes using past system performance as completely representative of current system performance. Therefore financial evaluations of PV systems will be considered using current system designs, equipment, and costs. Judgements on performance and reliability will be based on past system experience and the reasonable impact of any design changes proposed. With this background and based on your experience in the design, application, and/or operation of PV systems and their current costs, please answer the following questions as completely as possible. Please provide cost/performance information on PV systems for each major application area as provided in Section I. Where this is not possible, please provide current component costs.

1. For similar applications as those detailed in Section I, what design changes if any would you make to the systems? What equipment choices would be different?

2. Based on 1., what is the current capital cost (including spares) of such a "point" designed system? ("Point" design refers to a specific insolation and load character) Provide recent installed cost/performance quotes if possible for similar systems, representative of typical application environments in developing countries.

3. What is the expected output of the system in an average solar insolation of a 5 $KWh/m^2/day$, specified in KWhrs/day, gallons or cubic meters of water pumped per day (state average head), or kilograms of grain ground per day (state fineness)?

EXHIBIT A-2 Questionnaire Summary Response Table

RESPONDENTS	NO KNOWLEDGE OF PV PROJECTS	DID NOT RESPOND: UNABLE	DID NOT RESPOND: WOULD NOT	NUMBER OF PROJECTS REFERENCED (SYSTEM)[a]: COMMUNICATIONS	LIGHTING	PUMPING	REFRIGERATION	VILLAGE ELECTRIFICATION	OTHER
• USAID MISSIONS									
(Responses deferred to)									
Antigua						1			
Belize (local PV rep)				2(5)	1(60)				Navigation (1)
Botswana (DHET)					6	5	3		
Burundi (health officer, AID)							1(10)		
Costa Rica	X								
Djibouti				1		2		1[b]	Science Lab Equipment
Dominican Republic (gov. officials)				3			1		
Ecuador (gov. officials)							2		
Guatemala			X						
Guinea	X								
Haiti						4			
Indonesia (gov. officials)					6	2	1		
Kenya (AMREF)							1		
Lesotho				6	1	1		2(22)[c]	
Liberia							1		
Malawi		X							
Mali (CLESO)					1	1(>80)	1		Grain Mill
Nigeria					1				
Paraguay	X								
Portugal	X								
Senegal (Research Eng.)					1	2	1	2	
Thailand (gov. official)				1(52)	2	2			
Uganda	X								
Yemen A.R. (AID/Peace Corps)					1	3			
Zaire				1	1		2(11)		
Zimbabwe						3	2		
• ORGANIZATIONS									
Associates in Rural Development						5			
Caribbean Agricultural R&D Institute						1			
Danish International Dev. Agency		X							
NASA LeRC[f]				1	5	6	28	3	Grain Mill & Water Pumping (1) Rural Clinics (9)
Research Triangle						2[d]			
United Nations				1				3	Desalination
• MANUFACTURERS									
A.Y. McDonald						3(21)			
ARCO Solar Inc.				2(7)	2			1	Power for R&D facility (2)
Grundfos Int'l						3			
Kyocera Int'l					3	4		3	
Motors Leroy Sumer								1[e]	
Solar Electric Int'l					2	3	1		
Solar Voltaics						5			
Solarex Pty. Ltd.				4(23)	1		1	1(2)	
Solec Int'l						1	1		
Sunmatt									Battery Charges Filmstrip Projectors
TOTALS	5	2	1	22(100)	34(93)	59 (>156)	48(65)	17(38)	

a. Projects may include reference to many systems, as in the case of Mali or Belize. Where the number of systems are not given, it was either not provided or unclear as to the number were than ten systems (ranges of systems also were provided).

b. 5.3 kW building power system.

c. 24 household systems powering lights, radio, TV and/or refrigeration; 8 shop systems powering tools registers, lighting, radio and/or stereo equipment.

d. R&D, Demonstration, Training projects in Malawi late 1985.

e. 40 kWp power plant in Corolico, Peru.

f. Data-base managed applications of rural systems; some were referenced in counts response.

QUESTIONNAIRE PROJECT LISTING

REFERENCE NUMBER/ PROJECT NUMBER	PROJECT TITLE/ LOCATION	APPLICATION/ PURPOSE	SYSTEM SPEC	IN-STALLA-TION DATE	FUNDING AGENCY	IN-COUNTRY PARTICIPATING AGENCY
1/1	Solar Photovoltaic Pumping System/ Diamonds Estate, Antigua, W.I.	Irrigation/Demonstration of Technology	1200 W ARCO	'82	USAID, Caribbean Development Bank	CARDI, Ministry of Agriculture
2/1	Navigational Aids/ Belize	Coastal Navigational Beacons/To assist in coastal navigation and channel marking	40 W ARCO	--	Originally British, currently none	Belize Ports Authority
2/2	Communications/Belize	Telecommunications in Rural Areas/To power telecommunication systems	40-80 W ARCO	--	--	Belize Telecommunications Authority
2/3	Communications/Belize	Radio Communication in Rural Areas/Powering radio communication systems for missionaries	40-80 W ARCO	DNK	Catholic, Baptist, and other religious groups	--
2/4	Residential Lighting/ Belize	Providing Low Level Electrical Power in Rural Areas/Single family electrification in rural areas	40-400 W ARCO	--	None	Individuals

REFERENCE NUMBER/ PROJECT NUMBER	PROJECT TITLE/ LOCATION	APPLICATION/ PURPOSE	SYSTEM SPEC	IN-STALLA-TION DATE	FUNDING AGENCY	IN-COUNTRY PARTICIPATING AGENCY
3/1	Botswana Renewable Energy Technology (BRET)/Moduidi, Botswana	Water Pumping/R&D Training	1,376 W ARCO, Jacuzzi	Sep '84	USAID	Ministry of Mineral Resources and Water Affairs (MMRWA)
3/2	BRET/Mahalapye, Botswana	Water Pumping/R&D Training	516 W ARCO, Jacuzzi	Sep '84	USAID	MMRWA
3/3	BRET/Malapowalsajang, Botswana	Water Pumping/R&D Training	1,376 W ARCO, Jacuzzi	Jul '82	USAID	MMRWA
3/4	BRET/Otse, Botswana	Water Pumping/R&D Training	420 W ARCO, Honeywell, Mono	Jan '82	USAID	MMRWA
3/5	BRET/Mathubudulewane, Botswana	Water Pumping/R&D Training	1,548 W ARCO, Mono Honeywell, Boss	Dec '82	USAID	MMRWA
3/6	BRET/Shoshong, Botswana	Refrigeration and Lighting/R&D, determine if viable	280 W ARCO, Marval, Comlite	Mid '84	USAID	MMRWA
3/7	BRET/Leutswaletau, Botswana	Refrigeration and Lighting/R&D, determine if viable	70 W ARCO, Polar Products, Comlite	Mid '84	USAID	MMRWA
3/8	BRET/Malowle, Botswana	Refrigeration and Lighting/R&D, determine if viable	420 W ARCO, Polar Products, Comlite	Mid '84	USAID	MMRWA

REFERENCE NUMBER/ PROJECT NUMBER	PROJECT TITLE/ LOCATION	APPLICATION/ PURPOSE	SYSTEM SPEC	IN-STALLA-TION DATE	FUNDING AGENCY	IN-COUNTRY PARTICIPATING AGENCY
3/9	BRET/Dodi, Botswana	School Lighting, Village Development/ R&D, determine if worthwhile	86 W Comlite, ARCO	Mid '84	USAID	MMRWA
3/10	BRET/Princess Marina Hospital, Botswana	Outdoor Lighting/Test, Demonstration	43 W REC Special-ties, ARCO	Jan '85	USAID	MMRWA
3/11	BRET/DEE Offices, Botswana	Outdoor Lighting/Test, Demonstration	43 W REC Special-ties, ARCO	Jan '85	USAID	MMRWA
4/1	Expanded Program of Immunization/Burundi	Solar Refrigeration/ Vaccine Storage	4 panels	before Jun '85	USAID	Ministry of Health

REFERENCE NUMBER/ PROJECT NUMBER	PROJECT TITLE/ LOCATION	APPLICATION/ PURPOSE	SYSTEM SPEC	IN-STALLA-TION DATE	FUNDING AGENCY	IN-COUNTRY PARTICIPATING AGENCY
5/1	ISERST/VITA Building Project/Djibouti	Lighting, Refrigeration/To demonstrate the feasibility of PV power in Djibouti	5300 W ARCO	June'84	VITA	--
5/2	ISERST/VITA Solar Pumps, Djibouti	Water Pumping/ Agriculture	300 W Solar Electronic Int.	July'84	VITA	--
5/3	R.T.D. Project/ Ali-Sabieh, Djibouti	F.M. Radio Transmitter/Radio for the rural community	600 W AEG Telefunken	Jan.'83	G.T.Z.	G.T.Z. (German Aid)
5/4	High School/Djibouti	Measure power loads equipment and lighting/Instructions and aid for students	420 W ARCO	April '84	--	Minister of Education
5/5	Agriculture/Atar, Djibouti	Water pumping/Pump water for drip irrigation	-- Solar Force	'82	F.A.C.	--
6/1	Solar Panel System/ Tierra Nueva, RPTR, Dominican Republic	Powering 71F2 Microwave Radio/To supply at a reasonable cost, continuous and reliable energy.	1,200 W ARCO	Oct 11, '83	CODETEL	--
6/2	700F1 Solar Repeater/ Loma Grande, Sanchez, Dominican Republic	Powering 700F1 Solar Repeater/To supply at a reasonable cost, continuous and reliable energy.	20 W GTE Lenkurt	Feb 5, '85	CODETEL	--

REFERENCE NUMBER/ PROJECT NUMBER	PROJECT TITLE/ LOCATION	APPLICATION/ PURPOSE	SYSTEM SPEC	IN-STALLA-TION DATE	FUNDING AGENCY	IN-COUNTRY PARTICIPATING AGENCY
7/1	Rural Telecom Project 30-M/Dominican Republic	Communication/Provide service to villages where electrification is not available, commercially viable	35 W Sharp Through Fujitsu, Ltd.	'82	Japan and Dominican Republic Governments/OECF	Nissho Iwai Corporation
8/1	Refrigeration System -- Freezer activated with solar system/Dominican Republic	Refrigeration of Vaccines/R&D	265 W Solar Power	Aug 8 '82	AID	Secretary of Public Health - COENER
9/1	Demonstration in Rural Health (Pedro Vincent Maldonado Systems)/Ecuador	Refrigeration for Vaccines, Lighting and others/Demonstration	3000 W Solarex	March '83	The Ecuadorian State, AID/NASA	INE Eduadorian Institute of Sanitary Works (IEOSS)
9/2	Demonstration in Rural Health/ Cabos, Ecuador	Refrigeration for Vaccines/Demonstration	300 W Solar Power	Nov '81	The Ecuadorian State, AID/NASA	INE IEOSS

REFERENCE NUMBER/ PROJECT NUMBER	PROJECT TITLE/ LOCATION	APPLICATION/ PURPOSE	SYSTEM SPEC	IN-STALLA-TION DATE	FUNDING AGENCY	IN-COUNTRY PARTICIPATING AGENCY
10/1	Mauge water System/ Haiti	Water Pumping/Village drinking water supply	770 W A.Y. McDonald	Dec. '83	USAID, CARE	USAID, CARE
10/2	Bois Mauge water System/Haiti	Water Pumping/Village drinking water supply	770 W A.Y. McDonald	Dec. '83	USAID, CARE	USAID, CARE
10/3	Bale de Menne water System/Haiti	Water Pumping/Village drinking water supply	770 W A.Y. McDonald	Feb. '83	USAID, CARE	USAID, CARE
10/4	Baudin-Jean Denis water System (2 units)/Haiti	Water Pumping/Village drinking water supply	1120 W each A.Y. McDonald	May '83	USAID, CARE	USAID, CARE
11/1	Kitwani Rural Health Centre/Kenya	Refrigeration and Lighting/Demonstration	2 kW NASA	Apr '83	USAID	Ministry of Energy
12/1	ATS Khubetsoana workshop, Maseru, Lesotho	Communication/Demonstration of PV power uses	33 W DMX equipment supplier	DMX	USAID	Lesotho Government
12/2	ATS Maleflibane workshop/Molchotlong, Lesotho	Communication and Lighting/Demonstration of PV power uses	33 W DMX equipment supplier	DMX	USAID	Lesotho Government

REFERENCE NUMBER/ PROJECT NUMBER	PROJECT TITLE/ LOCATION	APPLICATION/ PURPOSE	SYSTEM SPEC	IN-STALLA-TION DATE	FUNDING AGENCY	IN-COUNTRY PARTICIPATING AGENCY
12/1	Twelve Installations/ Lesotho	Household systems for lights, radio and some TV	8 @ 35 W 3 @ 70 W 1 @ 10 W	'84-'85	By Homeowners	--
12/2	Eight Installations/ Lesotho	Shops for cash registers, lighting, radio (Two-way) or Hi-Fi sets.	6 @ 70 W 2 @ 35 W (Most are 24 V systems)	'84-'85	By Shop Keeper	--
12/3	Six Installations/ Lesotho	Two Households with additional refrigeration Two primary 2-way radio communications One water pumping One Repeater Station	140 W 35 and 70 W 60 W 20 W	'84-'85	Self-Funded except 2-way Radio by Government	
14/--	[No specific projects were referenced] Lesotho	- charging source for DC plant - repeater stations - telecommunications purposes	-	-	-	-
15/1	Prototype Clinics/ Liberia	Refrigerator/Vaccine Storage	DWK W NASA	Oct. 11, '85	USAID/NASA	Ministry of Health and Social Welfare

REFERENCE NUMBER/ PROJECT NUMBER	PROJECT TITLE/ LOCATION	APPLICATION/ PURPOSE	SYSTEM SPEC	IN-STALLA-TION DATE	FUNDING AGENCY	IN-COUNTRY PARTICIPATING AGENCY
16/1	Renewable Energy Project/Mali	Water Pumping Systems/ Water Supplies to rural areas (human plus animal use)	1,300-2,600 w panel-Solarex pumps-Guinard	'81/'82	USAID	LESO
16/2	Renewable Energy Project/Mali	PV Lighting Systems/ Night-time illumination for Maternity Centres, Hospitals	80-160 w Solarex, ARCO	'82/'83	USAID	LESO
16/3	Renewable Energy Project/Mali	PV Refrigerators/ Storage of vaccines, medicines	160-200 w ARCO, Solar Products	'82/'84	USAID	LESO
16/4	PV Grain Mill/Mali	Grain Grinding, Milling/testing task of milling by women in village context	2.44 kW PV Array-NASA Lewis, Mill-Jacobson	May '85	USAID	LESO
17/1	Personal Use/Niger State, Nigeria	Lighting, Refrigeration, and Ventilation/ Evaluation of PV systems for national and expatriate use.	780 w ARCO	June'84	personal	--

REFERENCE NUMBER/ PROJECT NUMBER	PROJECT TITLE/ LOCATION	APPLICATION/ PURPOSE	SYSTEM SPEC	INSTALLATION DATE	FUNDING AGENCY	IN-COUNTRY PARTICIPATING AGENCY
04/1	Affiviam/Senegal	Water Pumping for Irrigation/Commercially viable	600 w	Mar '80	F.E.D.	Centre d'Animateurs Ruraux
04/2	Wilinaudiaw/Senegal	Water Pumping/ Commercially viable	2,600 w	Feb '80	F.E.D.	Caritas
04/3	Mont Rolland/Senegal	Lighting/R&D	768 w	Apr '80	Ministir Francais de L'Industrie	Mission Catholique de Mont-Rolland
04/4	Mont Rolland/Senegal	Refrigeration (vaccines)/R&D	384 w	Apr '80	Ministere Francais de l'Industrie	Mission Catolique de Mont-Rolland
04/5	Village Artif/Senegal	(village) Rural Electrification/ R&D	5,280 w	Nov '82	PNUD-AFME	SENELEC
04/6	(vaccines)/Senegal	Water Pumping				
09/1	Mnuse Mwe hospital/ Kayenga, Zaire	Communication -- S/W radio/intermission contact -- no telephones	48 w (6 panels each 24 cells)	Photo-watt (now sold out)	Personal and Methodist Church	--
09/2	Same system/Zaire	Refrigeration (vaccines)			Personal and Methodist Church	--
09/3	Same system/Zaire	Lighting/working lights in seven rooms			Personal and Methodist Church	--

REFERENCE NUMBER/ PROJECT NUMBER	PROJECT TITLE/ LOCATION	APPLICATION/ PURPOSE	SYSTEM SPEC	IN-STALLA-TION DATE	FUNDING AGENCY	IN-COUNTRY PARTICIPATING AGENCY
ZW/[illegible]	Medical Refrigeration/ Chikwaka, Zimbabwe	Vaccine Refrigeration, Lighting, Medical Sterilization/ Demonstration	2,800 w Solarex	May '83	USAID	Government of Zimbabwe (Health & Energy Ministry)
ZW/[illegible]	Medical Refrigeration/ Chiota, Zimbabwe	Vaccine Refrigeration/ Demonstration	850 w Solar Power Corporation	Feb '83	USAID	Government of Zimbabwe (Health & Energy Minstry)
ZW/[illegible]	Cranborne Solar water Pump/Harare, Zimbabwe	Water Pumping/ Demonstration	900 w Solar Force, Pompes Guinard	Nov '81	French Government	Government of Zimbabwe, Solamatics
ZW/[illegible]	Zhuta Solar Pump/ Chiweshe, Zimbabwe	Water Pumping/ Demonstration	1,300 w Solar Force, Pompes Guinard	Jun '82	French Government	Government of Zimbabwe, Solamatics
ZW/[illegible]	Kat Sander Village Solar Project/Matabo, Zimbabwe	Water Pumping and Lighting/Demonstration	462 w ARCO	'83	Private Company William Smith & Gourock	--

REFERENCE NUMBER/ PROJECT NUMBER	PROJECT TITLE/ LOCATION	APPLICATION/ PURPOSE	SYSTEM SPEC	IN-STALLA-TION DATE	FUNDING AGENCY	IN-COUNTRY PARTICIPATING AGENCY
21/1	Village Water Supplies/Haiti	PV Water Pumping for Potable Water/ Commercially viable demo.	4 kW	early '83	CARE/AID	CARE/AID Port au Prince
21/2	Irrigation/Sudan	PV Water Pumping for Crops/Commericially viable irrigation demo.	1680 W	mid '84	Private with UNDP overview	UNDP (United Nations Development Programmes)
21/3	PV Irrigation Pumping/U. of California - Davis	PV Water Pumping for Irrigation/Demo. for flood & sprinkler irrigation	3000 W	Aug '83	U. of California Davis/California Energy Comm.	Calif. Energy Commission
21/4	PV Village & Livestock Pumping/ Mexico	PV Water Pumping for Potable Water/Commer. viable package systems.	630 W	Nov '81	Private	Private
21/5	Living Snowfence/ Wyoming	PV Water Pumping for Drip Irrigation/ Demo. of DC deep well submersible pump	1100 W	mid '84	Wyoming Dept. of Highways	--
21/6	Various demos. in 15 countries	PV Water Pumping/ Potable water, small irrigation	0.5 - 3 kW	since '81	Mostly Private	--

REFERENCE NUMBER/ PROJECT NUMBER	PROJECT TITLE/ LOCATION	APPLICATION/ PURPOSE	SYSTEM SPEC	IN-STALLA-TION DATE	FUNDING AGENCY	IN-COUNTRY PARTICIPATING AGENCY
22/1	Botswana Renewable Energy Project/Otse, Botswana	Water Pumping/Drinking and irrigation water supply	280 W Blue Sky	Oct., '82	USAID	MMRWA
22/2	Botswana Renewable Energy Project/ Mahalapye, Botswana	Water Pumping/Drinking and irrigation water supply	516 W ARCO, Jucuzzi	June, '84	USAID	MMRWA
22/3	Botswana Renewable Energy Project/ Molepowaba Long, Botswana	Water Pumping/Drinking and irrigation water supply	1376 W ARCO, Jucuzzi	July, '84	USAID	MMRWA
22/4	Botswana Renewable Energy Project/ Mochudi, Botswana	Water Pumping/Drinking and irrigation water supply	1376 W ARCO, Jucuzzi	July, '84	USAID	MMRWA
22/5	Botswana Renewable Energy Project/ Mathubudukwane, Botswana	Water Pumping/Drinking and irrigation water supply	1548 W Mono, Boss, Honeywell	Aug., '84	USAID	MMRWA
22/6	Botswana	Various	--	--	--	--
23/1	Izimbaya, Tanzania	Water Pumping/Supply to clinic	1400 W	Apr '85	--	M/W Diocese
23/2	Merti, Kenya	Water Pumping/Supply to Mission Station	1400 W	Oct '84	CIDA (Canada)	Merti Mission
23/3	Ilpartimaro, Kenya	Water Pumping/Cattle watering and supply to cattle dip	1400 W	Mar '85	DANIDA	Rural Development Fund

REFERENCE NUMBER/ PROJECT NUMBER	PROJECT TITLE/ LOCATION	APPLICATION/ PURPOSE	SYSTEM SPEC	IN-STALLA-TION DATE	FUNDING AGENCY	IN-COUNTRY PARTICIPATING AGENCY
24/1	Shikoku Electric Power Company, Ltd. Japan	1 MW Grid System/ Utility Power PV System	300 kW	1982 on	Japanese Special Development Fund	NEDO
24/2	Kankoi Project/ Pakistan	Village Electrification/Lighting and Water Pumping	5.2 kW	'82	Kyocera Corporation Donation Program	--
24/3	Village Power System/ Sri-Lanka	Village Electrification/Lighting	4.4 kW	'84	Japanese AID Program	--
24/4	Well Pumping System/ Senegal	Water Pumping/Drinking water supply	6.0 kW	'84	Japanese AID Program	--
24/5	Well Pumping System/ Sudan	Water Pumping/Drining water supply	4 kW	'84	Brigeston Corp.	N.W.A.
24/6	Village Power/Pakistan	Village Electrification/Lighting and Water Pumping	120 kW	'83 on	Pakistan Government	--
25/1	Paomia, Ronducinai, Corsica, France	Paomia PV Plant/ Powering a village	44,064 W Solar Force, Leroy Somer	Jul '83	EEC, EDF, AFME	--

REFERENCE NUMBER/ PROJECT NUMBER	PROJECT TITLE/ LOCATION	APPLICATION/ PURPOSE	SYSTEM SPEC	IN-STALLA-TION DATE	FUNDING AGENCY	IN-COUNTRY PARTICIPATING AGENCY
26/1	PV Pumping, CRAFA/ Taroudant, Morocco	Water pumping for irrigation for an Agricultural Training Center/Demonstration of PV pumping	7 kW Solar Engineering Services	Jun '85	USAID/Rabat, Morocco	CDER/CRAFA, Morocco
26/2	Ecole Des Mines/ Marrakech, Morocco	Water pumping for irrigation at a technical school/Research and testing of modules and pumps, and irrigation	4,320 W Solar Engineering Services	Nov '85	USAID/Rabat, Morocco	CDER/Ecole des Mines Marrakech
27/1	UNDP Project GLO/80/003/UK	Water Pumping/Testing for Phase II	351 W SEI	Oct '82	World Bank	Sir William Halcrow & Partners
27/2	SEI 43 LS/Egypt Basaisa Village, near Cairo	Water pumping (water is being sold to field owners to pay for system)/Irrigation	480 W SEI	Mar '84	--	American University in Cairo
27/3	Shirati Irrigation Scheme/Tanzania	Water Pumping/Plot Irrigation	280 SEI W S250 System	Sep '81	Mennonite Central Committee	--
27/4	Katilu Health Centre/ Kenya	Lighting and Refrigeration to replace diesel generator	930 W Arco, Polar Products, Fisher Karpark	Oct '84	NORAD	NORAD
27/5	Magumu Church/Tanzania	Lighting	640 W Arco, REC, FKI	May '85	Mary Knoll Fathers	Mary Knoll Fathers

REFERENCE NUMBER/ PROJECT NUMBER	PROJECT TITLE/ LOCATION	APPLICATION/ PURPOSE	SYSTEM SPEC	IN-STALLA-TION DATE	FUNDING AGENCY	IN-COUNTRY PARTICIPATING AGENCY
28/1	Solarhouse "Lanser-wiese"/Salzburg, Austria	Household Electrification Demo., R&D, Commercial viable	1728 W AEG-Telefunken VARTHA, Solar Voltaic (SV)	Jan '84	Government of Salzburg (Province)	Through Solar Voltaics
28/2	Sunwind Pump/ "University of Vienna"	Solar/Wind Water Pumping/R&D	264 W Helios Techn., SV, University Vienna	Nov '83	Solar Voltaics Company	Through Solar Voltaics
28/3	Sun pump/Argentina	Solar Water Pumping/ Demo.	520 W Siemens, Grundfos	Nov '83	Solar Voltaics Company	Agro Solar, Mr. Gold (agent)
28/4	Solar-Osmotic-Irrig.-System (Agronet; Old Version)/Mexico, Venezuela, Brazil, Argentina, USA (AZ), Peru, Chile	Irrigation/Demo., R&D	Each 9 or 18 W Solavolt, AGE, SV	Nov '83 Jun '84	Solar Voltaics Company	7 different agents
28/5	Solar-Osmotic-Irr.-Syst (New Version)/ Volders, Austria	Irrigation/R&D	163 W ARPE-PLAST, Sr., Helios Techn.	Mar '85	Solar Voltaics Company	ARPE-PLAST, Austria
28/6	Sunpump/Dominican Republic	Solar Water Pumping/ R&D, Demo., Training, Comm. viable	840 W Zontec, Grundfos	May '85	INDOTEC*, Santa Domingo	Sir William Halcrow & Partners, G.B.

*Dominican Institute of Industrial Technology

REFERENCE NUMBER/ PROJECT NUMBER	PROJECT TITLE/ LOCATION	APPLICATION/ PURPOSE	SYSTEM SPEC	IN-STALLA-TION DATE	FUNDING AGENCY	IN-COUNTRY PARTICIPATING AGENCY
29/1	Central Communications Inc. Repeaters (5 systems)/Phillippines	Communications Repeater Stations Power Supply/To provide reliable power supply	5-330 W Solarex	Jun '82	United Planters Coconut Bank	Central Communications, Inc.
29/2	MHS Solar Powered Repeaters (5 systems)/ Phillippines	Communications/To provide reliable power supply in remote mountain tops	5-120 W Solarex	Jun '83	Ministry of Human Settlements	Ministry of Human Settlements
29/3	Northern Samar Rural Integrated Devt. Project/ Mt. Adga, Calbayog, Samar, Phillippines	Communications/To provide reliable power to a repeater station	560 W Solarex	Sep '81	Australian Devt. Assistance Bureau	Northern Samar Rural Integrated Devt. Project Office
29/4	National Irrigation Administration Microsiesmic and Flood Warning System (12 systems) Magat Dam. Isabela, Phillippines	Telemetry, Communications/To supply power to remote areas where equipment is located.	2 x 384 W Microsiesmic stations 10 x 84 W Siren flood warning systems Solarex	Mar '82	World Bank Loan	National Irrigation Administration
29/5	Eliseo Lizada's Lighting/TV System/ Pillila, Rizal, Phillippines	Lighting/Replacement of 600 W gasoline generator to avoid noise and air pollution.	42 W Solarex	Sep '82	Mr. Eliseo Lizada	Mr. Eliseo Lizada

REFERENCE NUMBER/ PROJECT NUMBER	PROJECT TITLE/ LOCATION	APPLICATION/ PURPOSE	SYSTEM SPEC	IN-STALLA-TION DATE	FUNDING AGENCY	IN-COUNTRY PARTICIPATING AGENCY
29/6	WHO Solar Refrigerator	Refrigeration (Vaccines)/Testing Demo. solar refrigerators	528 W Solarex	Jun '84	World Health Organization Manila Office	Bureau of Energy Devt. Ministry of Energy, PNOC
29/7	Pilot Solar Pump Plant and Photovoltaic Field Laboratory	Village Electrification and several small applications/R&D, Demonstration, Testing	13 kW village electrification 7 kW small applications AEG, Telefunken	Feb '83	Germany Ministry of Economic Cooperation	Bureau of Energy Development Ministry of Energy, PNOC-ERDC (Phil. National Oil Co.-Energy Research & Development Center)
30/1	Gokal Pumping System/ Karachi, Pakistan	Water pumping/Farm Irrigation	400 W	Mar '83	None	None
30/2	Refrigeration System/ Nairobi, Kenya	Refrigeration/ Vaccines, other medical	140 W	Aug '83	None	None
30/3	Tosco Project/ Bakersfield, California, USA	Cathodic Protection/ Protection of underground pipelines	790 W	Mar '83	None	None
30/4	Twenty-nine Palms Project/Twenty-nine Palms, California, USA	Military "Village" Electrification/ Lighting, Refrigeration, Communications etc.	11 KW	Oct '82	U.S. Government	U.S. Naval Weapons
30/5	Edwards Project/ Eastern Nevada, USA	Communication/Microwave repeaters on remote hilltops	4,168 W	Oct '81	U.S. Government	U.S. Air Force
30/6	Luminol Light/Various locations	Outdoor Lighting/High efficiency outdoor space lighting	66 W	various	None	None

REFERENCE NUMBER/ PROJECT NUMBER	PROJECT TITLE/ LOCATION	APPLICATION/ PURPOSE	SYSTEM SPEC	IN-STALLA-TION DATE	FUNDING AGENCY	IN-COUNTRY PARTICIPATING AGENCY
31/1	Medical Solar Chargers/Zimbabwe	Set of 100 small (Sun-Watt #F-2) PV battery chargers/To recharge 2V 5AHr lead-acid gel-cell batteries for remote medical clinic.	2 W [$11/W]	Oct '83	Prolea Medical Services	same
31/2	Filmstrip Projection kits/Shipped worldwide	PV modules to recharge 12V battery pack for slide projectors/ Educational tool for remote areas of 3rd world.	5 W [$20/W]	Dec '84 to present	World Neighbors	varies

REFERENCE NUMBER/ PROJECT NUMBER	PROJECT TITLE/ LOCATION	APPLICATION/ PURPOSE	SYSTEM SPEC	IN-STALLA-TION DATE	FUNDING AGENCY	IN-COUNTRY PARTICIPATING AGENCY
32/1	Rural Energy Centres/ Mehrarahmat, Khan, NWFP, Pakistan	Village Lighting, Fans, Pumping/ Demonstration	20 kW Solarforce	Dec '84	UNDP/UNDTCD	Director General Energy Resources
32/2	Rural Energy Centres/ Malmara, Sind, Pakistan	Village Lighting, Fans, Pumping/ Demonstration	10 kW ARCO	For May '85	--	--
32/3	Rural Energy Centres/ Khuzdara, Baluchistan Pakistan	Village Lighting, Fans, Pumping/ Demonstration	5 kW	For May '85	UNDP/UNDTCD	DGER
32/4	Prototypes in Renewable Energy/Abu Ghosam, Red Sea Governorate, Egypt	Vapour Compression Desalination of Seawater/Demonstration	8 kW AEG TELEFUNKEN	For Jun '85	UNDP/UNDTCD	Ministry Electricity and Energy
32/5	Prototypes in Renewable Energy/Egypt	Solar HF Telecommunication/Demonstration	1040 W BP Solar	Sep '83	UNDP/UNDTCD	Ministry Electricity and Energy
32/6	Plus solar projects in Maldives, Gambia, Mongolia, PDR Yemen, Seychelles.					

REFERENCE NUMBER/ PROJECT NO.	PROJECT TITLE/ LOCATION	APPLICATION/ PURPOSE	SYSTEM SPEC	INSTALLATION DATE	FUNDING AGENCY	IN-COUNTRY PARTICIPATING AGENCY
II/1	Photovoltaic Solar Cells/Mengala, North Lampung, Indonesia	Lighting and Television/ Demonstration, field test, social acceptance test	35 W Tideland-MG-600	May '82	Directorate General for Electric Power	Directorate General for Electric Power
II/2	Photovoltaic Solar Cells/Rompin, Pagar Alam, Indonesia	Refrigeration, lighting and television for Remote Hospital/Demonstration, field test, social acceptance test	80 W ARCO M-51	September '83	Directorate General for Electric Power	Directorate General for Electric Power
II/3	Photovoltaic Solar Cells/Pelat, Lampung Province, Sumatra, Indonesia	Lighting and Television/ Demonstration, field test, social acceptance test	37 W ARCO ASI 16-2000	April '82	Directorate General for Electric Power	Directorate General for Electric Power
II/4	Photovoltaic Solar Cells/Cibinong, Cianjur, West Java, Indonesia	Water Pumping for drinking water/Demonstration, field test, social acceptance test	31 W ARCO ASI 16-2000	April '82	Directorate General for Electric Power	Directorate General for Electric Power
II/5	Photovoltaic Solar Cells/ Pilangkenceng, Madiun, East Java, Indonesia	Lighting and Television/ Demonstration, field test, social acceptance test	80 W ARCO M51	January '84	Directorate General for Electric Power	Directorate General for Electric Power

[illegible] NUMBER / PROJECT NO.	PROJECT TITLE / LOCATION	APPLICATION / PURPOSE	SYSTEM SIZE	INSTALLATION DATE	FUNDING AGENCY	IN-COUNTRY PARTICIPATING AGENCY
33/76	Photovoltaic Solar Cells/Lahaman, Kalimantan, Indonesia	Lighting and Television, Demonstration, field test, social acceptance test	37 w Philips RP 8-87-C	June 1981	Directorate General for Electric Power	Directorate General for Electric Power
33/77	Photovoltaic Solar Cells/Bowelali, Center of Java, Indonesia	Lighting and Television, Demonstration, field test, social acceptance test	33.5 w Solarindo CSG-8331	February 1984	Directorate General for Electric Power	Directorate General for Electric Power
33/78	Photovoltaic Solar Cells/Majalengka, West Java, Indonesia	Lighting and Television, Demonstration, field test, social acceptance test	33.5 w Solarindo CSG-8331	February 1984	Directorate General for Electric Power	Directorate General for Electric Power
33/79	Photovoltaic Solar Cells/Jecamp, Central Java, Indonesia	Water Pumping for Drinking Water Demonstration, field test, social acceptance test	33.5 w Solarindo CSG-8331	February 1984	Directorate General for Electric Power	Directorate General for Electric Power

REFERENCE NUMBER/ PROJECT NO.	PROJECT TITLE/ LOCATION	APPLICATION/ PURPOSE	SYSTEM SIZE	INSTALLATION DATE	FUNDING AGENCY	IN-COUNTRY PARTICIPATING AGENCY
34/1	Center for Experimental Rural Energy/ Wiang Kalai, Lampang	Village Electrification/ Demonstration	5 kW Photowall Aerowatt, Oldham, Fatelley	November 1982	FNEM (UNIF), French Agency for Energy Management (AFME)	Senelec
35/1	Water Lifting Project/Tam Tha Kham, Lamphun Province, Thailand	Water Pumping/Village water supply	220 W Solavolt Cell	December 1982	USAID	National Energy Administration (NEA)
35/2	Water Lifting Project/Thailand	Water Pumping/Irrigation	8880 W 8900	Planned	USAID	NEA
35/3	NEA Solar Cell Project/Khao Krom, Petchaburi Province, Thailand	Lighting, Audio Visual Aids/ Lighting, TV-Video	345 W Thai Solar Co. Ltd.	February 1985	Thai Government	NEA
35/4	NEA Solar Cell Project/Thailand	Lighting/Domestic Lighting	40 @ 10 W	Planned	Thai Government	NEA
35/5	PA Telecommunication Project/52 stations, Thailand	Telecommunication/Power station for remote telecommunication stations	46,910 W (13.7kW/ Installation, avg.)	1984 - 1986	World Bank	Telephone Organization of Thailand

REFERENCE NUMBER/ PROJECT NO.	PROJECT TITLE/ LOCATION	APPLICATION/ PURPOSE	SYSTEM SIZE	INSTALLATION DATE	FUNDING AGENCY	IN-COUNTRY PARTICIPATING AGENCY
[illegible]	The Ahmadia Water Pumping System/Yemen Arab Republic (Y.A.R.)	Water Pumping/Village potable water supply	1440 W Grundfos	June '83	(USAID)	Confederation of Yemeni Development Association (CYDA)
[illegible]	Matrabah Village Water System/ Y.A.R.	Water Pumping/Village potable water supply	540 W Grundfos	May '84	American Peace Corps	CYDA
[illegible]	Jebah Nopeah PV Project/Jurah Village, Y.A.R.	Lighting/Lighting for a school and a health clinic	3 @ 230 W Ahmo Rahman Wowman Trading (ARCO Dist.)	February '84	American Peace Corps	CYDA
[illegible]	Mutna Water Pumping System/ Y.A.R.	Water Pumping/Tree Irrigation	540 W Grundfos	January '85	American Peace Corps	CYDA

[illegible] NUMBER/ PROJECT NO.	PROJECT TITLE/ LOCATION	APPLICATION/ PURPOSE	SYSTEM SPEC	INSTALLATION DATE	FUNDING AGENCY	IN-COUNTRY PARTICIPATING AGENCY
[illegible]	Photovoltaic Project at Chonga Mission/Kimpese, Zaire	Refrigerator, freezer to assess the effect of PV equipment on rural health care	350 w Solar Power Corp.	February '82	NASA	
[illegible]	Integrated Health Project (660-0093) 5 stations near Kalambulu, Zaire	Refrigerator, freezer/ Rural health centers	B P 265 w Solar Power Corp.		Salvation Army	
[illegible]	[illegible] Tracker Zaire	Two-Axis Flat-Plate PV Tracker to supply power to [illegible] facilities/Research and Development	10 kw ARCO	May '84		
[illegible]	King Saud University/Riyadh, Saudi Arabia	Two-Axis Mirror Enhanced PV Tracker/Research and Development	5 kw ARCO	To be installed	Saudi Arabia	None
[illegible]	King Abdulaziz International Airport/Jeddah, Saudi Arabia	Lighting/To have a stand-alone, autonomous lighting system for the parking lot	58 kw ARCO	June '82	K.A.I. Airport Authority	K.A.I. Airport Authority

REFERENCE NUMBER/ PROJECT NO.	PROJECT TITLE/ LOCATION	APPLICATION/ PURPOSE	SYSTEM SPEC	INSTALLATION DATE	FUNDING AGENCY	IN-COUNTRY PARTICIPATING AGENCY
40/1	IMSS/Mexico City, Mexico	Remote Clinic/DC lighting and communications	140 W ARCO	'82	IMSS (Mexican Social Security)	ARCO Solar, Inc.
40/2	AC Remote Electrification/ Sadat City, Egypt	Power to Lab Facility and Water Pumping/Sacredrip irrigation project. Move people out of populated areas between Cairo and Alexandria into desert	13.5 kW ARCO	'82	American University at Cairo	Egyptian Government
40/3	Microwave Repeater/Atachama Desert, Chile	PV Power to 6 Repeater Stations/Replace diesel generators and frequent maintenance	5.25 kW ARCO, Italtel	'84	Itallel	Antel-Uriguay, and ARCO Solar, Inc.
40/4	Radio Telephone/ Papua New Guinea	Telephone Communications/ Link outer villages to world	80 W ARCO	'79	Post telephone and telegraph	Papua New Guinea Government

REFERENCE NUMBER/ PROJECT NO.	PROJECT TITLE/ LOCATION	APPLICATION/ PURPOSE	SYSTEM SPEC	INSTALLATION DATE	FUNDING AGENCY	IN-COUNTRY PARTICIPATING AGENCY
41/1	PV-Powered Water Pump and Grain Grinding System/ Tangaye, Burkina Faso	Water Pumping (Potable Water) and Grain Grinding/ Support Study of "socio-economic effects of reducing time required by women to draw water and grind cereal grain	1.8 kW (increased to 3.6 kW in '81)	March '79	USAID	USAID
41/2	Tunisia Renewable Energy Project/ Tunisia	- Village Power - Water Pumping - Farm House Power	- 29 kW - 2@1.4 kW - 1.4 kW Solar Power Corp., and Tri-Solar Corp.	February '83	USAID/Tunisia	Societe Tunisienne de l' Electricite et du Gaz (STEG)
41/3	Medical Systems in Developing Countries/Guyana (1), Ecuador (1), Kenya (2), Zimbabwe (1) Gabon (4)	Rural Clinic Systems/ Demonstrate use of PV to meet electrical needs of rural health facilities	1.4 kW each except Ecuador which is 2.8 kW Solarex	February - June '83	USAID	Ministries of Health

REFERENCE NUMBER/ PROJECT NO.	PROJECT TITLE/ LOCATION	APPLICATION/ PURPOSE	SYSTEM SPEC	INSTALLATION DATE	FUNDING AGENCY	IN-COUNTRY PARTICIPATING AGENCY
41/4	PV-Powered Vaccine Storage Refrigerator-Freezers	Refrigerator, Freezer Vaccine Storage/Field test PV-powered refrigerator for vaccine storage				
	Pucara, Peru		248 W Solar Power Corp. (SPC), Adler-Barbour (AB)	October '82	CDC	
	Bocas Del Palo, Columbia		284 W SPC, AB	August '82	AID	
	Las Tablas, Dominican Republic		284 W SPC, AB	August '82	AID	
	Tierra Blanca, Guatemala		248 W SPC, AB	October '82	AID	
	Guaimaca, Honduras		200 W Solavolt Int'l., AB	January '84	AID	
	Anse-A-Veau, Haiti		284 W SPC, AB	September '82	AID	

REFERENCE NUMBER/ PROJECT NO.	PROJECT TITLE/ LOCATION	APPLICATION/ PURPOSE	SYSTEM SPEC	INSTALLATION DATE	FUNDING AGENCY	IN-COUNTRY PARTICIPATING AGENCY
41/4 (cont'd)	Schepmoed, Guyana		284 W SPC, AB	September '82	AID	
	Comuna Cobos, Ecuador		284 SPC, AB	September '82	AID	
	New Sandy Bay, St. Vincent & the Grenadines		200 W SVI, Marvel (M)	January '84	AID	
	Canouan, St. Vincent & the Grenadines		160 W SVI, Polar Products (PP)	January '84	AID	
	Waramuri, Guyana*		Solarex (SX), AB	February '83	AID	
	Pedro Vicente Maldonado/Ecuador*		SX, AB	February '83	AID	
	Kaur, Gambia Gunjar, Gambia		2 @ 320W SPC, AB	January '83	CDC	
	Niofouin and Zaranou, Ivory Coast		2 @ 355 W SPC, AB	February '83	CDC	

* R/F is part of larger clinic system

REFERENCE NUMBER/ PROJECT NO.	PROJECT TITLE/ LOCATION	APPLICATION/ PURPOSE	SYSTEM SPEC	INSTALLATION DATE	FUNDING AGENCY	IN-COUNTRY PARTICIPATING AGENCY
41/4 (cont'd)	Menne, Ivory Coast		280 W SVI, PP	February '84	CDC	
	Orodara, Burkina Faso		200 W SVI, PP	February '84	AID	
	Sechn, Liberia		390 W SPC, AB	October '84	AID	
	Kionzo, Liberia		355 W SPC, AB	February '83	AID	
	Chiota, Zimbabwe		284 W SPC, AB	February '83	AID	
	Ouelessebougou, Mali		200 W SVI, PP	February '84	AID	
	Kibwezi and Ikutha, Kenya*		SX, AB	May '83	AID	
	Chikwakwa, Zimbabwe*		SX, AB	May '83	AID	
	Mowagar, Jordan		160 W SVI, M	June '84	AID	

* R/F is part of larger clinic system

REFERENCE NUMBER/ PROJECT NO.	PROJECT TITLE/ LOCATION	APPLICATION/ PURPOSE	SYSTEM SPEC	INSTALLATION DATE	FUNDING AGENCY	IN-COUNTRY PARTICIPATING AGENCY
41/4 (cont'd)	Es-Smirat and Bir Amama, Tunisia		2 @ 240 W SVI, PP, M	February '84	AID	
	Bouaboute, Morocco		355 W SPC, AB	October '83	AID	
	Hammam Biadha, Tunisia*		SPC, AB	January '83	AID	
	Kuluduffushi, Maldives		284 W SPC, AB	May '82	AID	
	Bhoorbaral, India		355 W SPC, AB	October '81	AID	
	Cibung Bulangand Batujaya, Indonesia		2 @ 320 W SPC, AB	April '82	AID	
	Tambon Tha Thong, Thailand		200 W SVI, M	November '83	AID	

* R/F is part of larger clinic system

REFERENCE LIST PROJECTS:

1. ANTIQUA, Caribbean Agricultural Research and Development Institute (CARDI). Laxman Singh, Technical Coordinator.

2. BELIZE, Robert Nicolait & Associates Ltd. Robert Nicolait, President.

3. BOTSWANA, Botswana Renewable Energy Technology (BRET). Jonathan Hodgkin, Engineer.

4. BURUNDI/USAID. Health/Pop Officer, Project Manager.

5. DJIBOUTI, Republic of, ISERST/VITA. Abdoulkarim Moussa, Technician.

6. DOMINICAN REPUBLIC, CODETEL. Rafael L. Zorilla, Gerente Mant. Sist. Transmision.

7. DOMINICAN REPUBLIC, Direccion General de Telecomns. Bartolome Rosario, Rural Telecommunication Project Chief.

8. DOMINICAN REPUBLIC, Oficina Regional de Salud 1. Ing. Hanna Elias, Regional Engineer.

9. ECUADOR/USAID, Instituto Nacional de Energia (INE). Victor Castellanos, Consultant, Solar Energy Unit.

10. HAITI/USAID, Foundation CARE. A. Scott Faiia, Assistant Director.

11. KENYA, AMREF. Dr. Sam Kazibwe and Dr. Christopher Wood, Senior Medical Officer.

12. LESOTHO, Appropriate Technology Section (ATS), Ministry of Co-ops & Rural Development. B. Kanetsi, Acting Head of Section.

13. LESOTHO, Senakangoeli Solar Systems. Gary Klein, President.

14. LESOTHO, Swedish Telecomns. International. John Blaxland, Project Manager.

15. LIBERIA/USAID. Robert C. Braden, Liberia Civil Engineering Advisor.

16. MALI/USAID, LESO. Cheickna Traore, Director, LESO.

17. NIGERIA. Lary van Zee, Church and Community Developer.

18. SENEGAL, C.E.R.E.R. Ibrahima Lo, Engineer.

19. ZAIRE, Republic of. Pauline Chambers, M.D., Medical Director Samuleb Memorial Hospital.

20. ZIMBABWE, Ministry of Energy. C. Mzezewa, Research Officer.

REFERENCE LIST PROJECTS:

(CONTINUED)

21. A.Y. McDonald Mfg. Co., Iowa, USA. John Eckel, Manager of Energy Products.

22. Associates in Rural Development, Inc. (ARD), Vermont, USA. Richard McGowan, Senior Engineer.

23. GRUNDFOS International a/s, Denmark. Michael Arbon, Product Line Manager, Solar Pumping Systems.

24. Kyocera International, Inc., Japan. Koreyuki Taketani, General Manager, Sakura Plant.

25. Moteurs Leroy Somer, France. Dominique Mercier, Engineer.

26. Research Triangle Institute, North Carolina, USA. Alan Wyatt, Technology Specialist.

27. Solar Electric International Inc., Malta. John M. Williams, Managing Director.

28. Solar Voltaics, Austria. Lennart Muigg, Ing., Managing Director.

29. Solarex Pty. Ltd., Phillippines. Efren B. Katague, Manager.

30. Solec International, Inc., California, USA. Gregory S. Glenn, Design & Sales Engineer.

31. SunWatt Corporation, Indiana, USA. Richard J. Komp, Vice President, R&D.

32. United Nations, New York, USA. Derek Lovejoy, Interregional Advisor Renewable Energy.

33. INDONESIA, Directorate General for Electric Power and New Energy. Endro Utomo Notodisuryo, Head, Sub Directorate of Rural Energy Development.

34. SENEGAL. [Not indicated].

35. THAILAND, National Energy Administration. Sompongse Chantavorapap, Director, Energy Research and Development Division.

36. YEMEN ARAB REPUBLIC. Mark K. Leverson, Coordinator of Solar Energy Projects.

37. ZAIRE/USAID. Debra A. Rectenwald, Mission Evaluation Officer.

38. ARCO SOLAR Inc., California, USA. Michael Curley, Manager, Field Operations.

39. ARCO SOLAR Inc., California, USA. Gary J. Shushnar, Manager, System Design.

40. ARCO SOLAR Inc., California, USA. Gary Zahnstecher, Engineer

41. NASA Lewis Research Center, Ohio, USA. Anthony F. Ratajczak, Head, Solar Energy Project Office.

APPENDIX B
OTHER BIBLIOGRAPHIC SOURCES

APPENDIX B
OTHER BIBLIOGRAPHIC SOURCES

Arbon, Michael; Grundfos International; Copenhagen, Denmark; series of correspondences February to April 1985.

Bocar, Sada Sy; Interview on SINAES a Daguerre's experience in Senegal; Held at Sixth European Photovoltaic Solar Energy Conference; April 1985.

Basu, P.; Mukhopadhyay; Banerjee, S., Das, S.; and Saha, H.; "Field Trial of Rural Solar Photovoltaic System"; University of Kalyani, W. Bengal, India; Presented at the Fourth European Photovoltaic Solar Energy Conference; May 1982.

Battacharya, T.K.; "Solar Photovoltaic Electricity: Will it Reach our Homes?"; Central Electronics Limited, India; 1985.

Cabraal, Anil and Delansanta, David; Application of Photovoltaic Electric Power to the Rural Education/Communication Needs of Developing Countries; NASA Contractor Report 167894; July 1982.

Danley, Douglas R., Science Applications International Inc.; Interview conducted in March 1985.

DeLombard, Richard; Photovoltaic Power System for Satellite Earth Stations in Remote Areas: Project Status and Design Description; NASA Technical Memorandum 83789; November 1984.

Faninger, G.; Groier, G.; Heindl, W.; and Rummich, E.; "Photovoltaische Stromerzeugung: Technische und Wirtschaftliche Moglichkeiten in Osterreich"; Austria Solar and Space Agency; November 1984.

Farm Machinery Institute, Pakistan Agricultural Research Council; "Feasibility of SEI-250 Portable Solar Powered Lift Pump"; Islamabad, Pakistan.

Goodman, James; Solar Electric International; Kathmandu, Nepal; Correspondence; February 1985.

Hansen, L.V. and McCormish, J.; "Telecommunication and Photovoltaics Converging Technology"; Solapak Limited and Telectron Limited; Presented at the Sixth European Photovoltaic Solar Energy Conference; April 1985.

Hoffman, G.; Notzold, H.; Ohrt, U.; Driesen, H.; Nasution, S.H.; "Photovoltaic Power Systems and Their Use within the Project Solar Village Indonesia"; Presented at the Fifth European Photovoltaic Solar Energy Conference; October 1983.

Jankura, Paul; former Peace Corps Energy Program Manager; interview conducted in May 1985.

Maass, Karl; AEG-Telefunken; Interview conducted at INTERSOL 85 Conference on June 26, 1985.

Madhab, Jayanta; Energy Advisor, Asian Development Bank; Manila, Philippines; correspondence; March 1985.

Maurer, F.; "Report on the Promotion of Solar-Electricity in Bhutan"; Helvetas (Swiss Association for Technical Assistance); Thimphu, Bhutan; June 1984.

Matlin, R.W.; Design Optimization and Performance of a Photovoltaic Microirrigation System for Use in Developing Countries; Massaschusetts Institute of Technology; Lexington, Massachusetts; COO/4090-33; July 1979.

Matlin, Ron; TriSolar Corporation; Bedford, Massachusetts; Discussions during PV Annual Meeting; March 1985.

Mouhoub, A. and Benmalek, M.; "Installation et Evaluation d'un Systeme Simple de Pompage Photovoltaique dans un Village Algerien"; Centre des Sciences et de la Technologie Nucleaires, Alger Gare, Algerie; Presented at the Fourth European Photovoltaic Solar Energy Conference; May 1982.

NASA-Lewis Research Center; Implementation Plan for Guyana Rural Health Photovoltaic Demonstration Project; Photovoltaic Development and Support Program; May 1981.

Pallett, R.G. and Brabben, T.E.; "Application and Experience of Photovoltaic Pumps for Irrigation in Pakistan"; Hydraulic Research Station Limited, Oxon, United Kingdom; Presented at Fourth European Photovoltaic Solar Energy Conference; May 1982.

Patil, Pandit B. and Mubayi, Vinad; Water Pumping in Developing Countries; Brookhaven National Laboratory, Upton, New York; DE82-005238; August 1981.

Ratajczak, Anthony F.; Photovoltaic-Powered Vaccine Refrigerator-Freezer Systems Field Test Results; NASA-Lewis Research Center; Cleveland, Ohio; NASA TM-86972; August 1985.

Scudder, Larry; NASA-Lewis Research Center; discussion in April 1985.

Simon, Fred; Conceptual Design of PV Medical Systems for Rural Health Applications; USAID Photovoltaic Development and Support Project; March 1981.

Smith, Douglas V.; Photovoltaic Power in Less Developed Countries; Massachusetts Institute of Technology; Lexington, Massachusetts; COO-4094-1; March 1977.

Smith, Douglas V. and Allison, Steven V.; Micro Irrigation with Photovoltaics; Massachusetts Institute of Technology; Cambridge, Massachusetts; MIT-EL-78-006; April 1978.

Starr, Michael R.; "Photovoltaics for Rural Electrification-Economic Aspects"; Oxon, United Kingdom; Presented at the Sixth European Photovoltaic Solar Energy Conference; April 1985.

Varadarajan, M.; "M. Varadarajan on PV Micro-Irrigation in India"; World Solar Markets; Business Publishers, Inc.; Silver Spring, Maryland; July 1984.

Waddington, D. and Herlevich, A.; Evaluation of Pumps and Motors for Photovoltaic Water Pumping Systems; Solar Energy Research Institute; Golden, Colorado; DE82-019163; June 1982.

Wallace, Ned; Survey Report on the Use of Photovoltaic Energy for Rural Health Services in Developing Countries; Prepared for NASA-Lewis Research Center; April 1981.