DETAILED ENGINEERING DESIGN OF PUSKESMAS' WATSAN FACILITIES

PHASE I (4 UNITS)

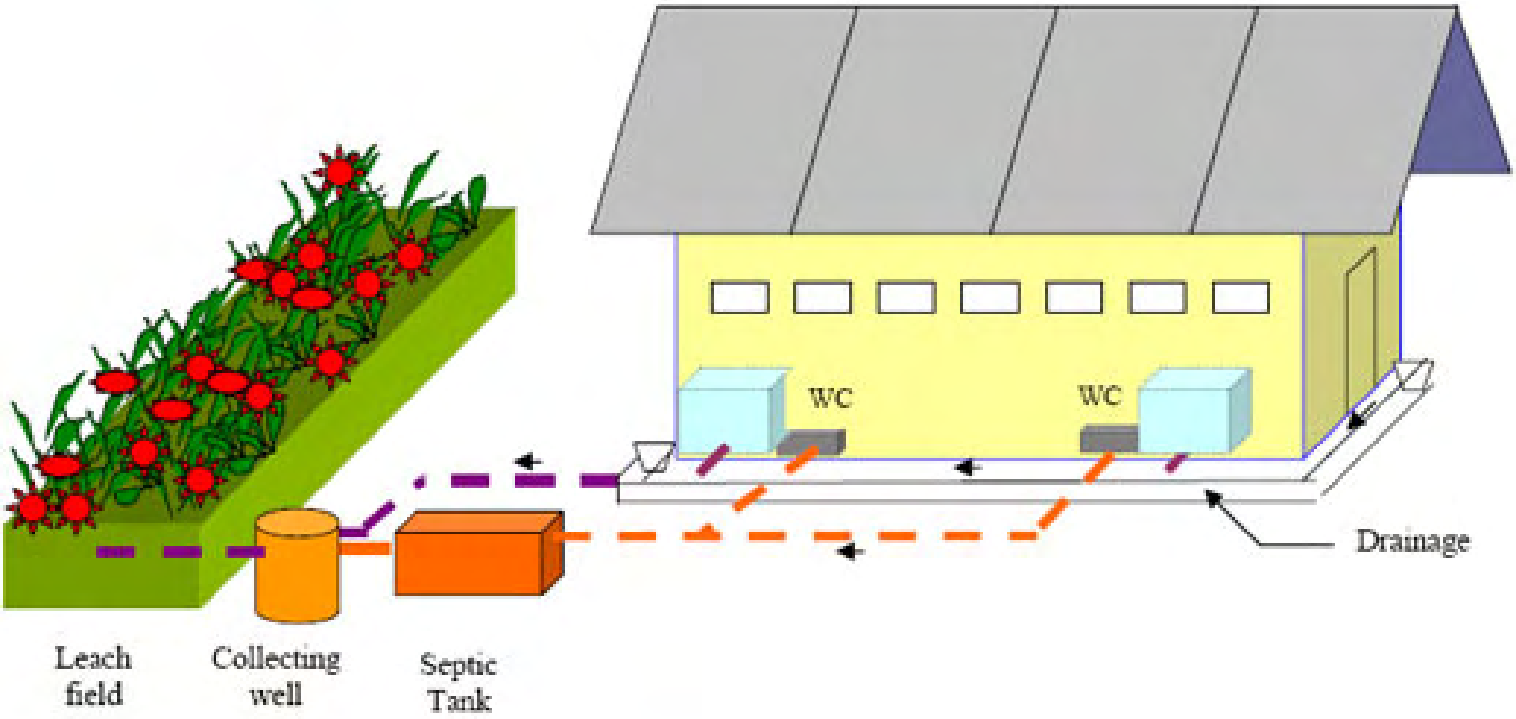

DECEMBER 2005

This publication was produced by Development Alternatives, Inc. for the United States Agency for International Development under Contract No. 497-M-00-05-00005-00

Illustration credit: Ridwan Habibie, ESP Banda Aceh/NAD.

A drawing draft of the sanitation system in local puskesmas.

DETAILED ENGINEERING DESIGN OF PUSKESMAS' WATSAN FACILITIES

PHASE I (4 UNITS)

Title:	***Detailed Engineering Design* of Puskesmas' Watsan Facilities Phase I (4 Units)**
Program, activity, or project number:	**Environmental Services Program, DAI Project Number: 5300201.**
Strategic objective number:	**SO No. 2, Higher Quality Basic Human Services Utilized (BHS).**
Sponsoring USAID office and contract number:	**USAID/Indonesia, Contract number: 497-M-00-05-00005-00.**
Contractor name:	**DAI.**
Date of publication:	**December 2005.**

DAFTAR ISI
TABLE OF CONTENTS

(BAHASA INDONESIA)

1. LINGKUP PEKERJAAN 1

2. LOKASI 1

3. KRITERIA DISAIN 1

3.1. SISTEM PENYEDIAAN AIR BERSIH 1
A. Konsumsi Air 1
B. Sumber Air 2
C. Reservoir 2
D. Sistem Perpompaan 2
E. Pipa air bersih 3
3.2. SISTEM SANITASI 3
A. Tangki septik 3
B. Sumur pengumpul 3
C. Bidang resapan 3
D. Waste water pipe 4
3.3. DRAINASE LINGKUNGAN 4
3.4. PERSAMPAHAN 4

4. KEBUTUHAN FASILITAS WATSAN 4

5. SKEMA SISTEM 5

5.1. SISTEM PENYEDIAAN AIR BERSIH 5
5.2. SISTEM SANITASI 5

6. BIAYA KONSTRUKSI 5

7. LAMPIRAN 6

(ENGLISH)

1. SCOPE OF WORK 1

2. LOCATION 1

3. DESIGN CRITERIA 1

3.1. WATER SUPPLY SYSTEMS 1
A. Water Consumptions 1
B. Source of water 2
C. Reservoir 2
D. Pumping Systems 2
E. Water supply pipe 3
3.2. SANITATION SYSTEMS 3
A. Septic Tank 3
B. Collecting well 3
C. Leach Field 3
D. Waste water pipe 4
3.3. ON SITE DRAINAGE SYSTEM 4
3.4. SOLID WASTE SYSTEM 4

4. NEEDS OF WATSAN FACILITIES 4

5. SYSTEMS DRAWING 5

5.1. WATER SUPPLY SYSTEMS 5
5.2. SANITATION SYSTEMS 5

6. CONSTRUCTION BUDGET 5

7. ATTACHMENTS 6

DED FASILITAS WATSAN PUSKESMAS TAHAP I (4 UNIT)

1. LINGKUP PEKERJAAN

Penyusunan DED fasilitas WATSAN di 4 Puskesmas (Tahap I), meliputi :

1. Sistem Penyediaan Air Bersih : Sumber air baku (PDAM atau sumur bor), ground reservoir/roof tank, pipa d an pompa.
2. Sistim Sanitasi : tangki septik, sumur pengumpul, bidang resapan, termasuk perpipaan air kotor
3. Drainase lingkungan
4. Sampah domestic dan sampah medik : Bak sampah dan tempat sampah

2. LOKASI

1. Polindes Nusa, Kecamatan Lhoknga, Kabupaten Aceh Besar
2. Polindes Lamateuk, Kecamatan Lhoknga, Kabupaten Aceh Besar
3. Polindes Lamgaboh, Kecamatan Lhoknga, Kabupaten Aceh Besar
4. Puskesmas Mibo, Kecamatan Banda Raya, Kota Banda Aceh

3. KRITERIA DISAIN

3.1. SISTEM PENYEDIAAN AIR BERSIH

A. KONSUMSI AIR

- Perkiraan konsumsi air untuk Puskesmas adalah 30 L/karyawan/hari. Untuk Puskesmas yang melayani rawat inap, konsumsi air ditambahkan dengan 30 L/bed/hari
- Kebutuhan air rata-rata adalah kebutuhan air harian ditambah dengan kehilangan air

DED OF WATSAN FACILITIES AT PUSKESMAS PHASE I (4 UNITS)

1. SCOPE OF WORK

Preparation DED of WATSAN facilities for 4 units of Puskesmas should include:

1. *Water supply systems: Sources of water (PDAM or bored well), ground reservoir/roof tank, pipe and pumping system.*
2. *Sanitation systems : Septic tank, collecting well, leach field, including waste water collecting pipe*
3. *On site drainage*
4. *Medical and solid waste facilities: Big trash bins & small dust bins.*

2. LOCATION

1. *Polindes Nusa, Kecamatan Lhoknga, Kabupaten Aceh Besar*
2. *Polindes Lamateuk, Kecamatan Lhoknga, Kabupaten Aceh Besar*
3. *Polindes Lamgaboh, Kecamatan Lhoknga, Kabupaten Aceh Besar*
4. *Puskesmas Mibo, Kecamatan Banda Raya, Kota Banda Aceh*

3. DESIGN CRITERIA

3.1. WATER SUPPLY SYSTEMS

A. WATER CONSUMPTIONS

- *Water consumption at the Puskesmas is estimated at 30 L/staff/day, while inpatients would require as much as 30 L/bed/day equals to daily water consumption plus water losses;*
- *Average water consumption equals to daily water consumption plus water losses;*

- Kehilangan air adalah jumlah kehilangan air di jaringan pipa distribusi, operasional dan pemeliharaan sistem. (*10% dari kebutuhan harian*)
- Kebutuhan harian maksimum (max-day) adalah 1,5 x kebutuhan air rata-rata
- Kebutuhan jam puncak adalah 1,75 x kebutuhan harian rata-rata

B. SUMBER AIR

- Sumber air berasal dari PDAM, bila tidak memungkinkan, berasal dari sumur bor
- Suplai air harus kontinyu dengan kualitas dan kuantitas air yang sesuai

C. RESERVOIR

- Reservoir harus dapat menyimpan air sebagai cadangan untuk fluktuasi penggunaan air setiap hari
- Asumsi kapasitas reservoir adalah 1 x kebutuhan harian maksimum
- Konstruksi ground reservoir terbuat dari beton bertulang
- Roof tank terdiri dari tangki air PVC dan dilengkapi dengan tower
- Konstruksi tower terbuat dari rangkaian besi siku L 5x5 cm

D. SISTEM PERPOMPAAN

- Suplai air membutuhkan sistem perpompaan bila tidak dapat dilakukan dengan cara gravitasi
- Kapasitas dan total head pompa disesuaikan dengan perencanaan

- *Water losses equals to water loss at distribution pipe plus water loss at water supply maintenance system (10 % of daily water consumptions);*
- *Maximum day consumptions (max-day) is 1,5 x daily consumptions;*
- *Peak hour consumptions is 1,75 x daily consumptions .*

B. SOURCE OF WATER

- *The source of water comes from PDAM, but if it is also possible to obtain water from bored well;*
- *Water supply must be continuous with good quality and quantity.*

C. RESERVOIR

- *The reservoir must contain a certain amount of water as a reserve to fluctuating daily consumption of wate;r*
- *Capacity assumption of the reservoir is 1 x maximum day consumptions;*
- *Construction of ground reservoir is made of reinforced concrete*
- *Roof tank is made of PVC water tank with tower construction;*
- *Tower construction is made of a series of L-steel 5 x 5 cm.*

D. PUMPING SYSTEMS

- *Water supply would need a pumping system, should a "gravity supply system" is not available;*
- *Capacity and total head of the pumping set must be in accordance with pumping system design*

E. PIPA AIR BERSIH

- Jenis pipa adalah PVC S-10, klas AW, diameter ½ inchi
- Pengadaan dan pemasangan pipa sesuai dengan ketentuan teknis dan termasuk dengan accesoriesnya

3.2. SISTEM SANITASI

A. TANGKI SEPTIK

- Tangki septik berfungsi untuk menurunkan kandungan BOD yang terkandung dalam air buangan
- Tipe tangki septik adalah persegi panjang : lebar = 2 : 1, panjang minimum 0,75 m, kedalaman air minimum 1 m, ketinggian konstruksi maksimum 2 m
- Konstruksi tangki septik terbuat dari beton bertulang
- Tangki septik dilengkapi dengan manhole dan pipa vent

B. SUMUR PENGUMPUL

- Fungsi sumur pengumpul adalah sebagai penampung air kotor dari out flow tangki septik, kamar mandi, wastafel dan air hujan
- Konstruksi sumur pengumpul terbuat dari buis beton diameter 0,8 m, kedalaman minimal 1 m
- Sumur pengumpul dilengkapi dengan manhole dan pipa vent

C. BIDANG RESAPAN

- Tipe bidang resapan adalah galian persegi panjang
- Dimensi galian disesuaikan dengan daya peresapan tanah

E. WATER SUPPLY PIPE

- *Type of pipe is PVC S-10, AW class, with 0.5 inch diameter;*
- *Pipe supply and material installation must be in accordance with technical requirements, including their accessories.*

3.2. SANITATION SYSTEMS

A. SEPTIC TANK

- *The function of the septic tank is to reduce the content of BOD in waste water*
- *The dimension of the septic tank is rectangular, which width is 2 : 1, minimum length is 0.75 m, minimum water depth is 1 m and maximum height is 2 m;*
- *The septic tank is made of reinforced concrete;*
- *The septic tank is equipped with a manhole and vent system.*

B. COLLECTING WELL

- *The functions of collecting well are to collect waste water from the out flow of a septic tank, bathrooms, wash basins and rain water;*
- *Construction of collecting well is made of pre-cast concrete caisson with 0,8 m diameter, and minimum depth of 1 m;*
- *Collecting well is equipped with manhole and vent system.*

C. LEACH FIELD

- *Type of leach field is a rectangular hole;*
- *Dimension of the hole is in accordance with infiltration range of the existing soil*

- Lebar minimum 0,5 m dan kedalaman minimum 0,45 m
- Kemiringan permukaan tanah dasar galian 0,2 %
- Media penimbun galian terdiri dari kerikil diameter 3 – 8 cm, lapisan atas ditutup dengan tanah
- Ketebalan masing-masing material timbunan sesuai dengan gambar perencanaan

- *Minimum width of the hole is 0,5 m and the minimum depth is 0,45 m;*
- *Slope of base soil surface is 0,2%;*
- *Fill material of the hole is gravel or split stone with 3 – 8 cm diameter, and the top layer is soil material*
- *The thickness of each filling material should be in accordance with detailed drawing.*

D. WASTE WATER PIPE

- Jenis pipa adalah PVC, Klas PV diameter 4 inchi
- Pengadaan dan pemasangan pipa sesuai dengan ketentuan teknis dan termasuk dengan accesoriesnya

D. WASTE WATER PIPE

- *Type of pipe is PVC, PV class with 4 inches diameter;*
- *Supplying and installation of pipe materials and their accessories must be in accordance with their technical requirements.*

3.3. DRAINASE LINGKUNGAN

- Konstruksi drainase terbuat dari pasangan batu dan saluran perpipaan
- Arah kemiringan saluran menuju sumur pengumpul atau sistem drainase kota

3.3. ON SITE DRAINAGE SYSTEM

- *Drainage construction consists of concrete brick and drainage pipe system;*
- *Direction of stream flow go in the direction of collecting well or out site drainage system*

3.4. PERSAMPAHAN

Peralatan persampahan terdiri dari bak sampah dari pasangan bata ukuran 80x100x80 cm dan tempat sampah terbuat dari fiber glass kapasitas 60 liter.

3.4. SOLID WASTE SYSTEM

Solid waste equipment consists of trash bin 80 x 100 x 80 cm made of concrete break and trash container made of fiber glass with 60 liters capacity.

4. KEBUTUHAN FASILITAS WATSAN

Kebutuhan fasilitas WATSAN untuk masing-masing Puskesmas dapat dilihat pada **Tabel 4.1.**

4. NEEDS OF WATSAN FACILITIES

*The needs of WATSAN facilities for the Puskesmas are available in **Table 4.1.***

5. SKEMA SISTEM

5.1. SISTEM PENYEDIAAN AIR BERSIH

Skematik sistem penyediaan air bersih Puskesmas dapat dilihat pada **Gambar 5.1** and **Gambar 5.2**.

5.2. SISTEM SANITASI

Skematik sistem sanitasi Puskesmas dapat dilihat pada **Gambar 5.3**.

6. BIAYA KONSTRUKSI

Biaya konstruksi fasilitas WATSAN untuk Puskesamas dapat dilihat pada Lampiran

5. SYSTEMS DRAWING

5.1. WATER SUPPLY SYSTEMS

*The details of Puskesmas water supply is available in **Figure 5.1** and **Figure 5.2**.*

5.2. SANITATION SYSTEMS

*The details of Puskesmas sanitation system is available in **Figure 5.3**.*

6. CONSTRUCTION BUDGET

Please see attachment section.

7. LAMPIRAN

1. Fasilitas Watsan
2. Skema Suplai Air
3. Skema Sanitasi
4. Rencana Anggaran Biaya (RAB)
   - Rekapitulasi Anggaran
   - Rincian Biaya Polindes Nusa
   - Rincian Biaya Polindes Lamateuk
   - Rincian Biaya Polindes Lamgaboh
   - Rincian Biaya Puskesmas Mibo
   - Analisa Harga Satuan
5. Gambar Teknis
6. Foto

7. ATTACHMENTS

1. *Watsan Facilities*
2. *Water Supply Scheme*
3. *Sanitation Scheme*
4. *Budget Construction*
   - *Budget Recapitulation*
   - *Detail Budget of Polindes Nusa*
   - *Detail Budget of Polindes Lamateuk*
   - *Detail Budget of Polindes Lamgaboh*
   - *Detail Budget of Puskesmas Mibo*
   - *Budget Details Analyze*
5. *Technical Drawing*
6. *Photos*

LAMPIRAN 1
TABLE : 4.1.
WATSAN FACILITIES NEEDS OF THE PUSKESMAS
PHASE 1 (4 UNITS)

No	me of Puskesmas	Water Supply System							Waste Water										Grey Water		Drainage		Solid Waste		
			Reservoir		Pump		Pipe		Septic Tank			Collecting well		Leach Field		Pipe									
		Sourches	Type	Quantity	Quantity L/Hour	Total Head (m)	Diameter (inchi)	Long (m)	Long (m)	Width (m)	Depth (m)	Diameter (mm)	Depth (m)	Long (m)	Width (m)	Depth (m)	Diameter (mm)	Long (m)	Diameter (mm)	Long (m)	Type	Long (m)	Bak Sampah	Medis (unit)	Domestik (unit)
1	Polindes Nusa	-	Ground reservoir	2 m3	10	30	0.5	30	1.6	0.8	1.3	0.8	1.0	2.0	0.8	1.0	PVC 100	20	PVC 100	10	concreate brick/pipe	41	1	2	2
			Roof tank	500 L																					
2	Polindes Lamateuk	Deep well	Roof tank	500 L	10	30	0.5	25	1.6	0.8	1.3	0.8	1.0	2.0	0.8	1.0	PVC 100	10	PVC 100	20	concreate brick/pipe	15	1	2	2
3	Polindes Lamgaboh	Deep well	Roof tank	500 L	10	30	0.5	20	1.6	0.8	1.3	0.8	1.0	2.0	0.8	1.0	PVC 100	10	PVC 100	12	concreate brick/pipe	15	1	2	2
4	Puskesmas Mibo	PDAM Connection	Ground reservoir	2 m3	56	30	0.5	15	1.6	0.8	1.3	0.8	1.0	2.0	0.8	1.0	PVC 100	10	PVC 100	0	concreate brick/pipe	16	1	2	2
			Roof tank	1000 L																					

LAMPIRAN 2: GAMBAR SISTEM SUPLAI AIR

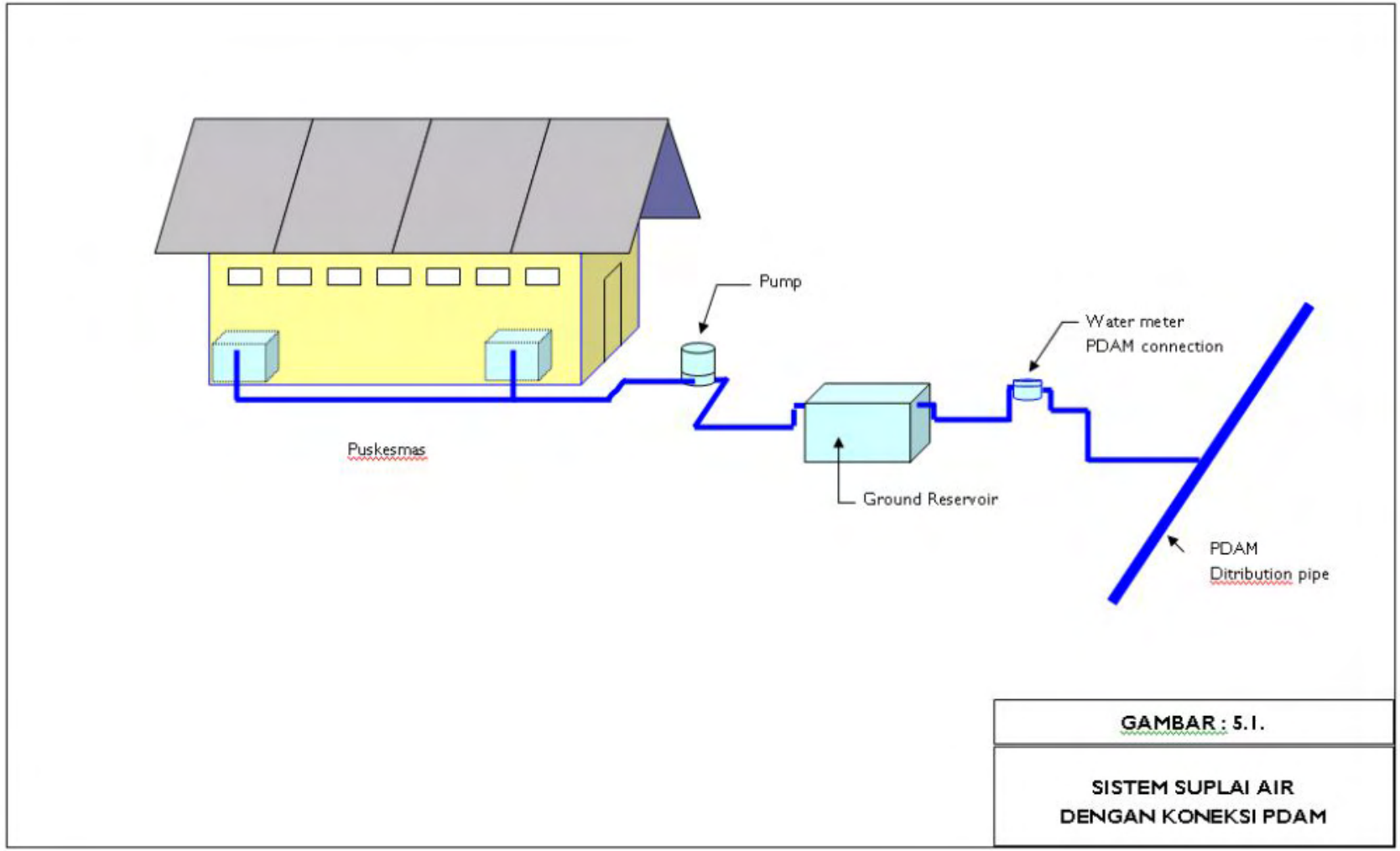

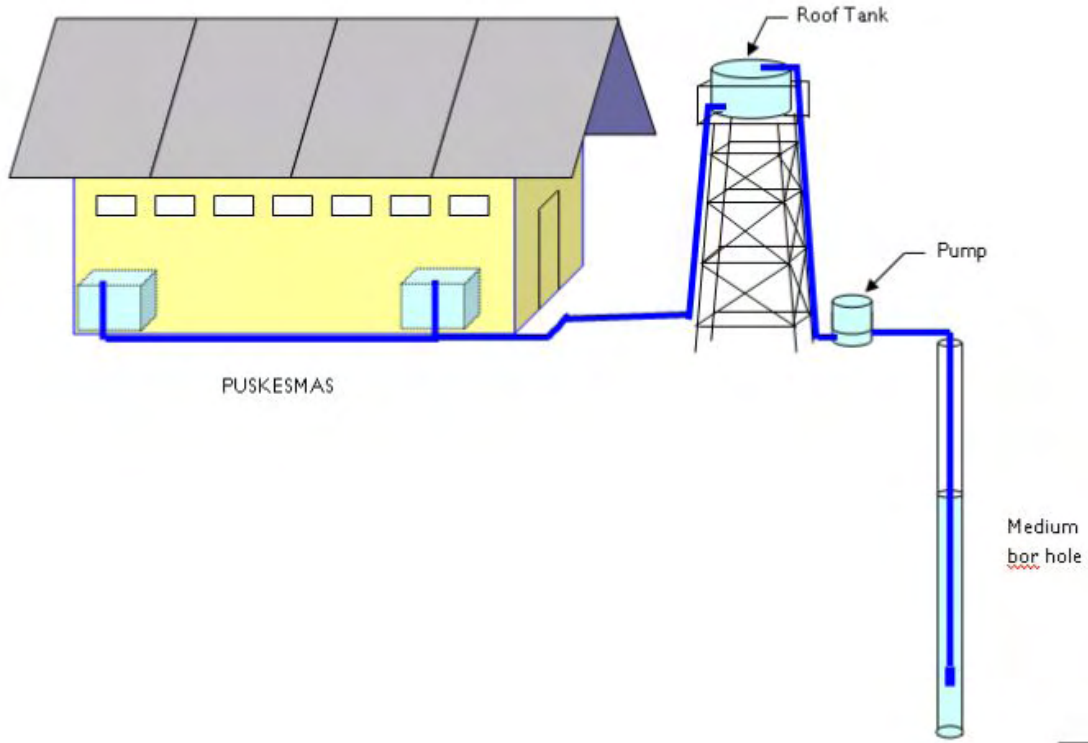

GAMBAR : 5.2.

SISTEM SUPLAI AIR
DARI SUMUR BOR

LAMPIRAN 3: SISTEM SANITASI PUSKESMAS

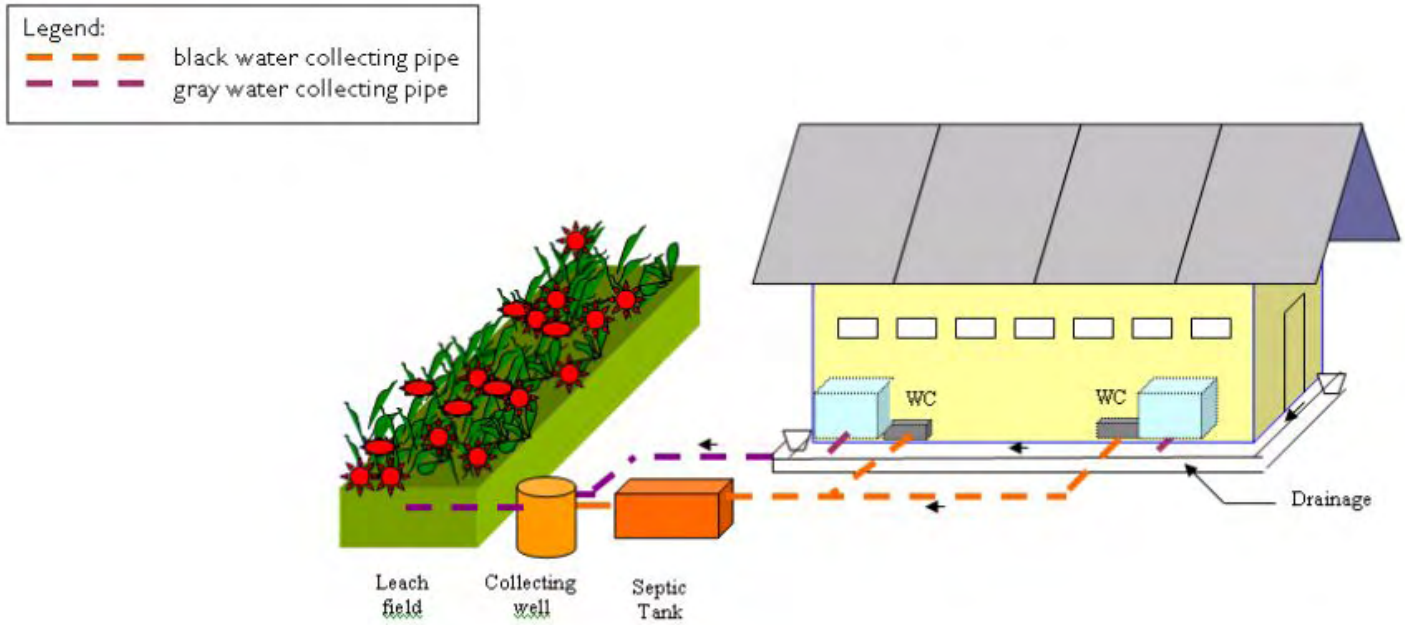

GAMBAR : 5.3.

SISTEM SANITASI PUSKESMAS

LAMPIRAN 5: DRAFT GAMBAR TEKNIK.

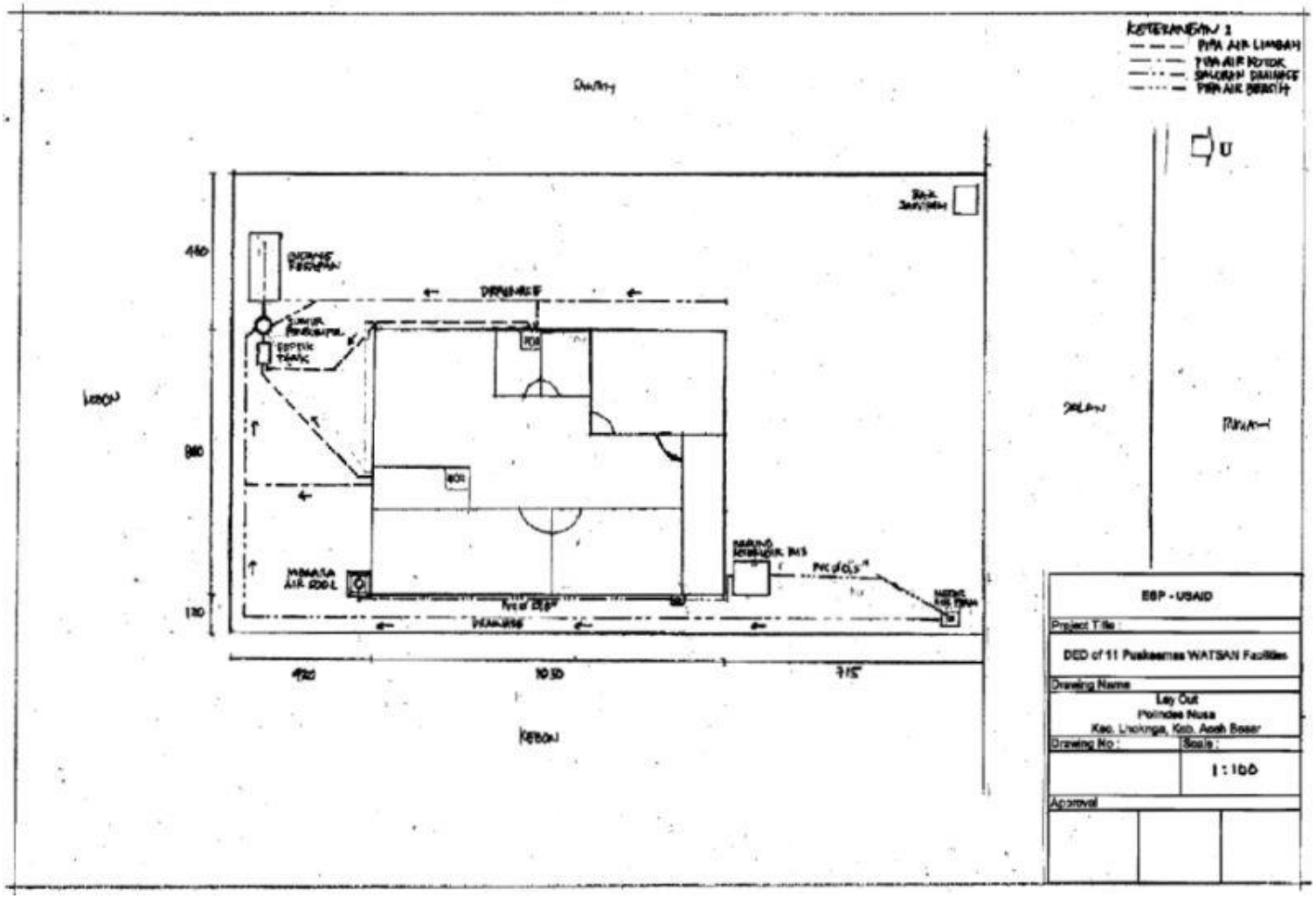

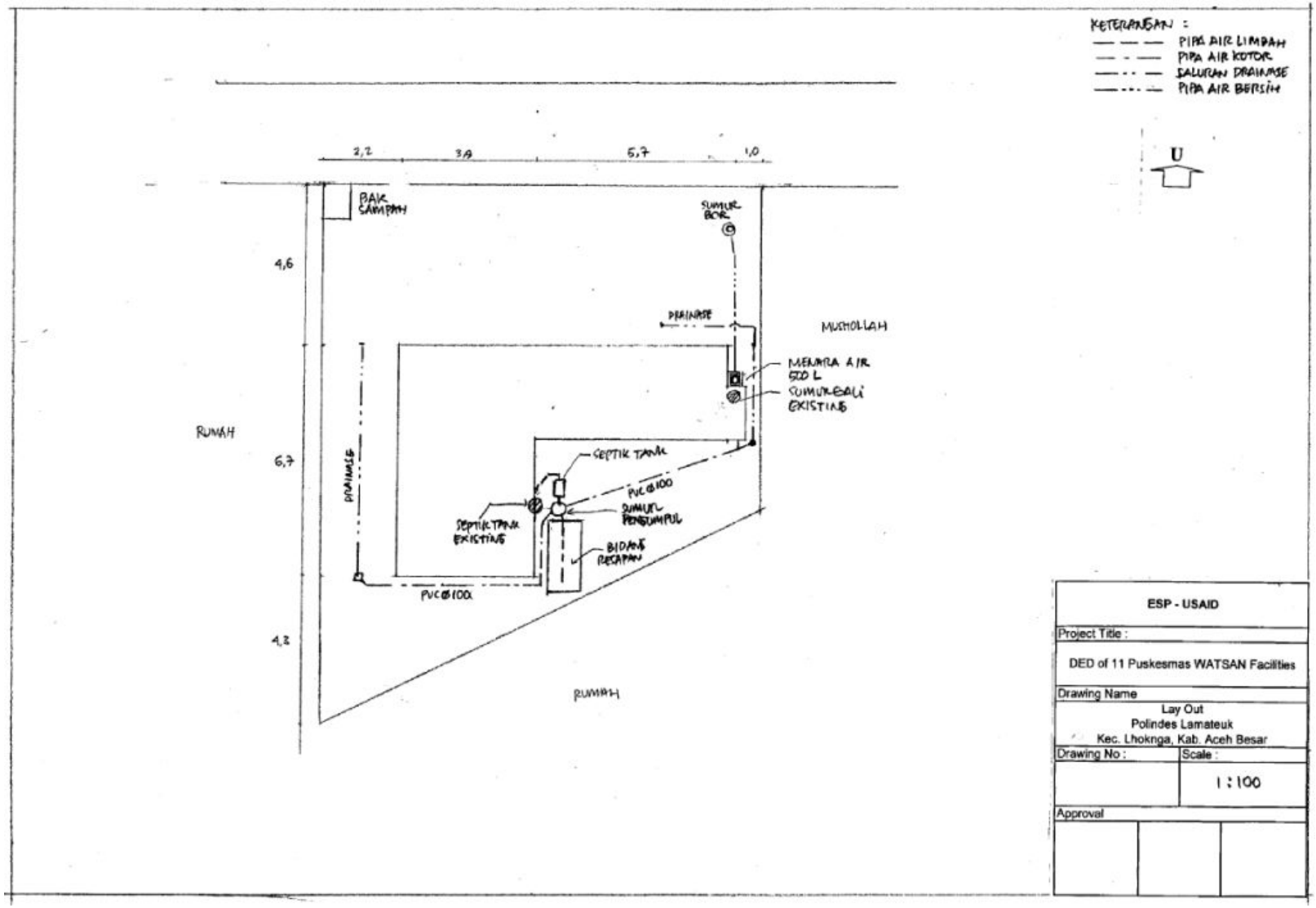
KETERANGAN :
PIPA AIR LIMBAH
PIPA AIR KOTOR
SALURAN DRAINASE
PIPA AIR BERSIH
U
2,2
3,9
5,7
1,0
4,6
6,7
4,2
BAK CAMPAH
SUMUR BOR
DRAINASE
MUSHOLLAH
MENARA AIR 500 L
SUMUR GALI EXISTING
RUMAH
SEPTIK TANK
PVC Ø100
SUMUR PENGUMPUL
SEPTIK TANK EXISTING
BIDANG RESAPAN
PVC Ø100
RUMAH
ESP - USAID
Project Title :
DED of 11 Puskesmas WATSAN Facilities
Drawing Name
Lay Out
Polindes Lamateuk
Kec. Lhoknga, Kab. Aceh Besar
Drawing No :
Scale :
1 : 100
Approval

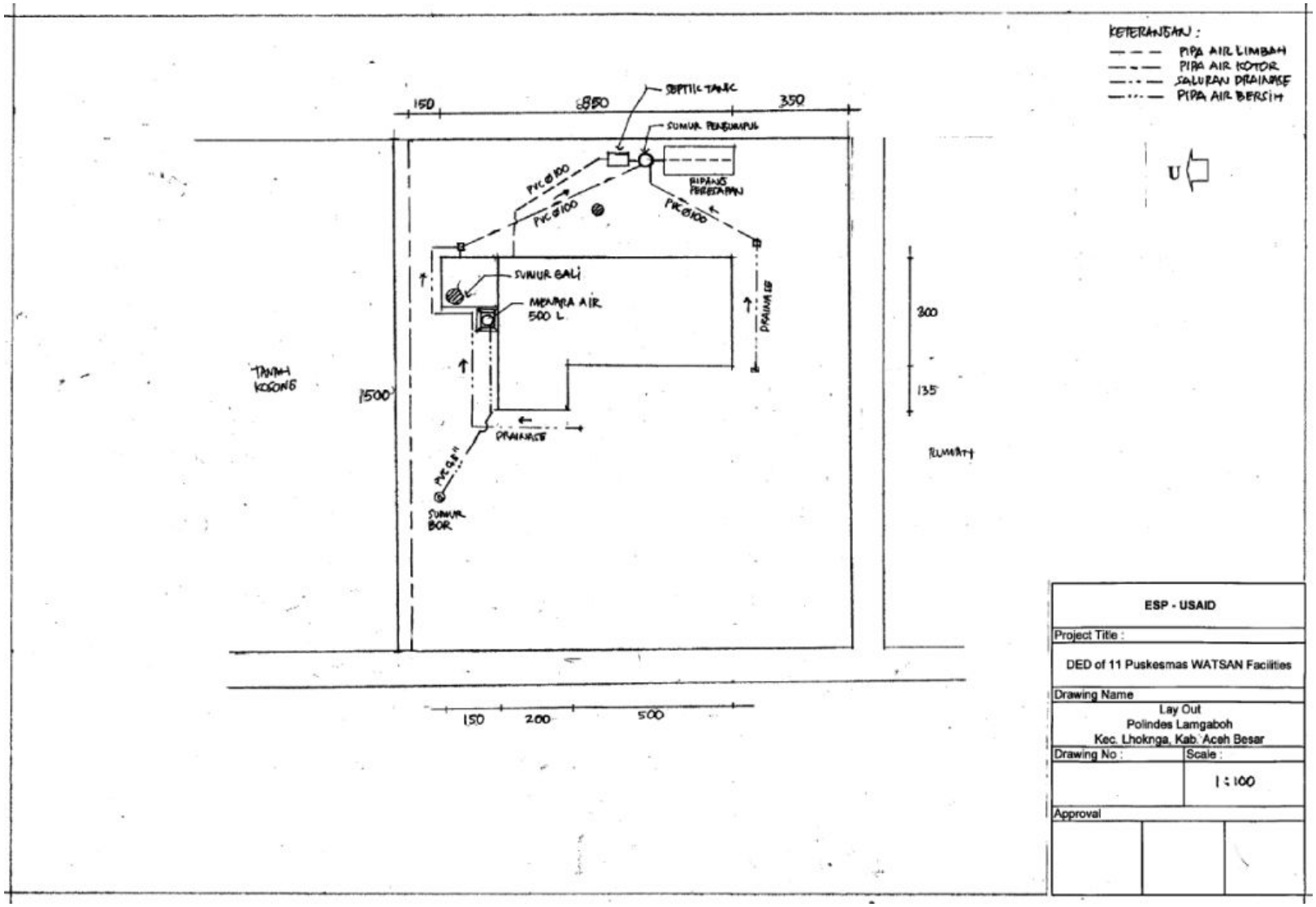
KETERANGAN :
PIPA AIR LIMBAH
PIPA AIR KOTOR
SALURAN DRAINASE
PIPA AIR BERSIH
U
150
850
350
SEPTIC TANK
SUMUR PENGUMPUL
PVC Ø100
BIDANG PERESAPAN
SUMUR GALI
MENARA AIR 500 L
DRAINASE
300
135
TANAH KOSONG
1500
DRAINASE
SUMUR BOR
RUMAH
150
200
500
ESP - USAID
Project Title :
DED of 11 Puskesmas WATSAN Facilities
Drawing Name
Lay Out
Polindes Lamgaboh
Kec. Lhoknga, Kab. Aceh Besar
Drawing No :
Scale :
1 : 100
Approval

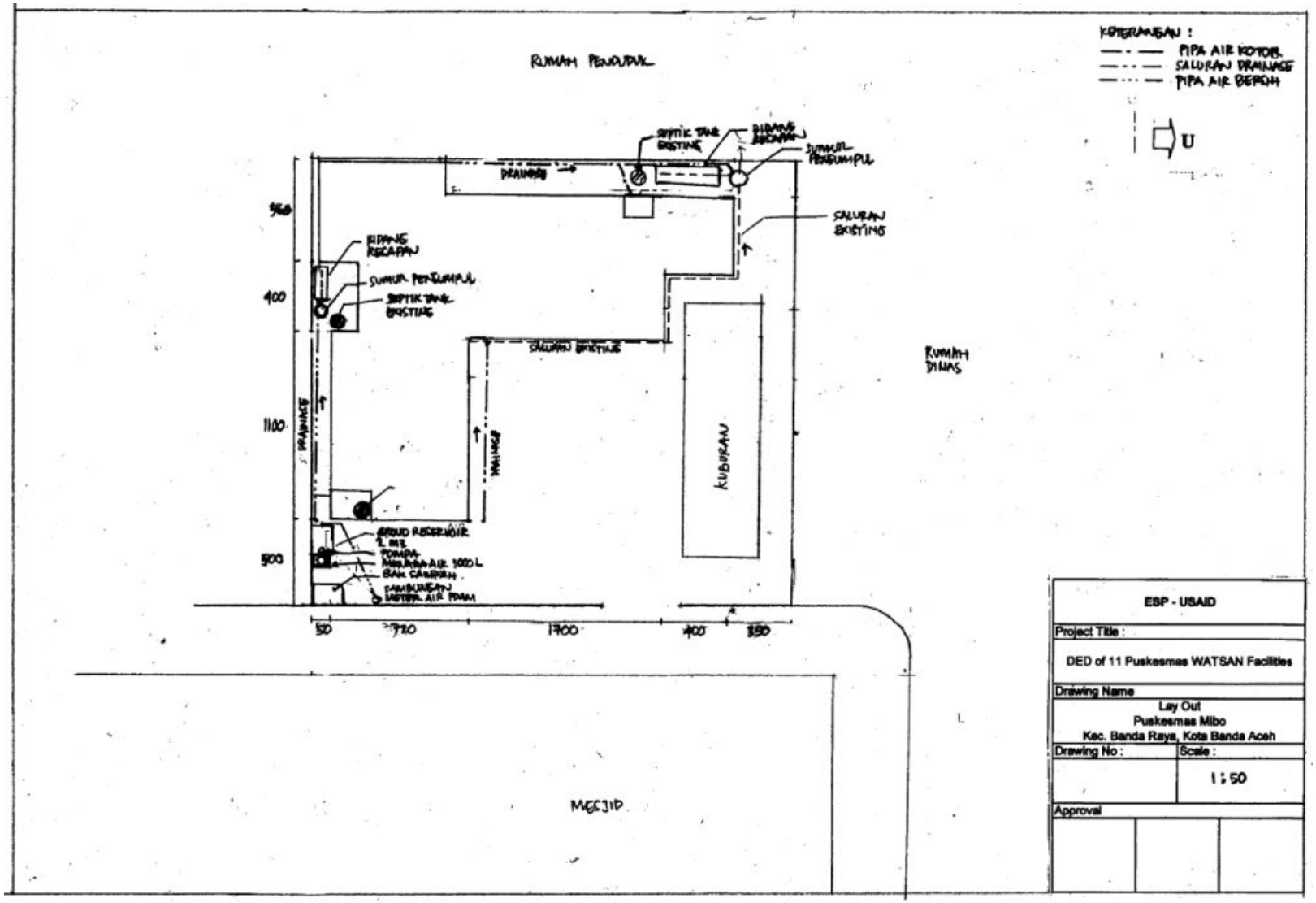
RUMAH PENDUDUK
KETERANGAN :
PIPA AIR KOTOR
SALURAN DRAINAGE
PIPA AIR BERSIH
U
SEPTIK TANK EKSISTING
BIDANG RESAPAN
SUMUR PENGUMPUL
DRAINASE
SALURAN EKSISTING
BIDANG RESAPAN
SUMUR PENGUMPUL
SEPTIK TANK EKSISTING
SALURAN EKSISTING
DRAINASE
DRAINASE
KUBURAN
RUMAH DINAS
GROUND RESERVOIR
POMPA
NAMPUNG AIR 1000 L
BAK CAMPURAN
SAMBUNGAN INSTALASI AIR TAMU
950
400
1100
500
50
720
1700
400
350
MESJID
ESP - USAID
Project Title :
DED of 11 Puskesmas WATSAN Facilities
Drawing Name
Lay Out
Puskesmas Mibo
Kec. Banda Raya, Kota Banda Aceh
Drawing No :
Scale :
1 : 50
Approval

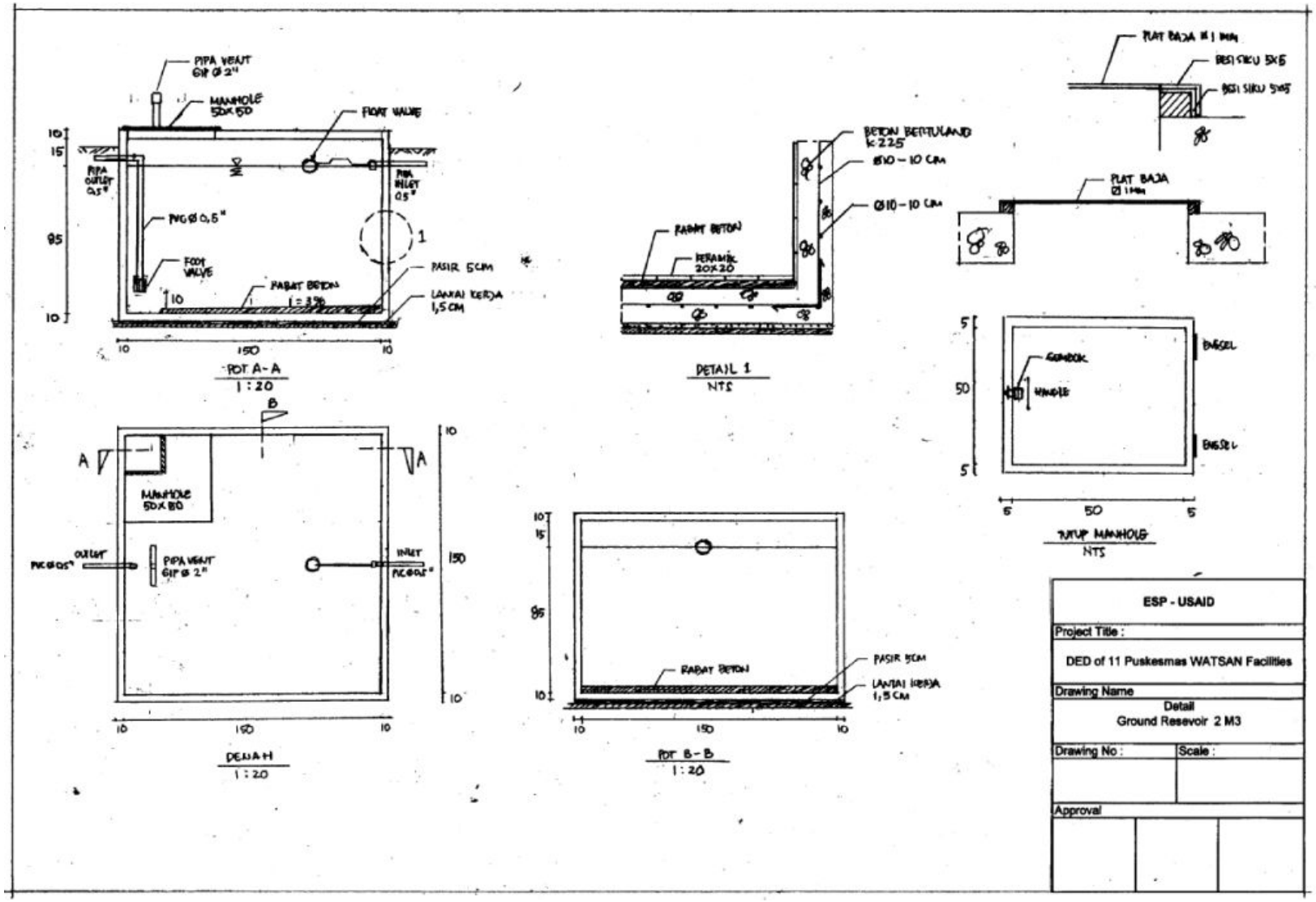
PIPA VENT GIP Ø 2"
MANHOLE 50X50
FLOAT VALVE
PIPA OUTLET 0,5"
PIPA INLET 0,5"
PVC Ø 0,5"
FOOT VALVE
PASIR 5CM
PASIRAT BETON
LANTAI KERJA 1,5 CM
POT A-A
1 : 20
BETON BERTULANG K 225
Ø10 - 10 CM
Ø10 - 10 CM
PASIRAT BETON
KERAMIK 20X20
DETAIL 1
NTS
PLAT BAJA
PLAT BAJA
GEMBOK
HANDLE
ENGSEL
ENGSEL
TUTUP MANHOLE
NTS
MANHOLE 50X50
OUTLET
PIPA VENT GIP Ø 2"
INLET
DENAH
1 : 20
PASIRAT BETON
PASIR 5CM
LANTAI KERJA 1,5 CM
POT B-B
1 : 20
ESP - USAID
Project Title :
DED of 11 Puskesmas WATSAN Facilities
Drawing Name
Detail
Ground Resevoir 2 M3
Drawing No :
Scale :
Approval

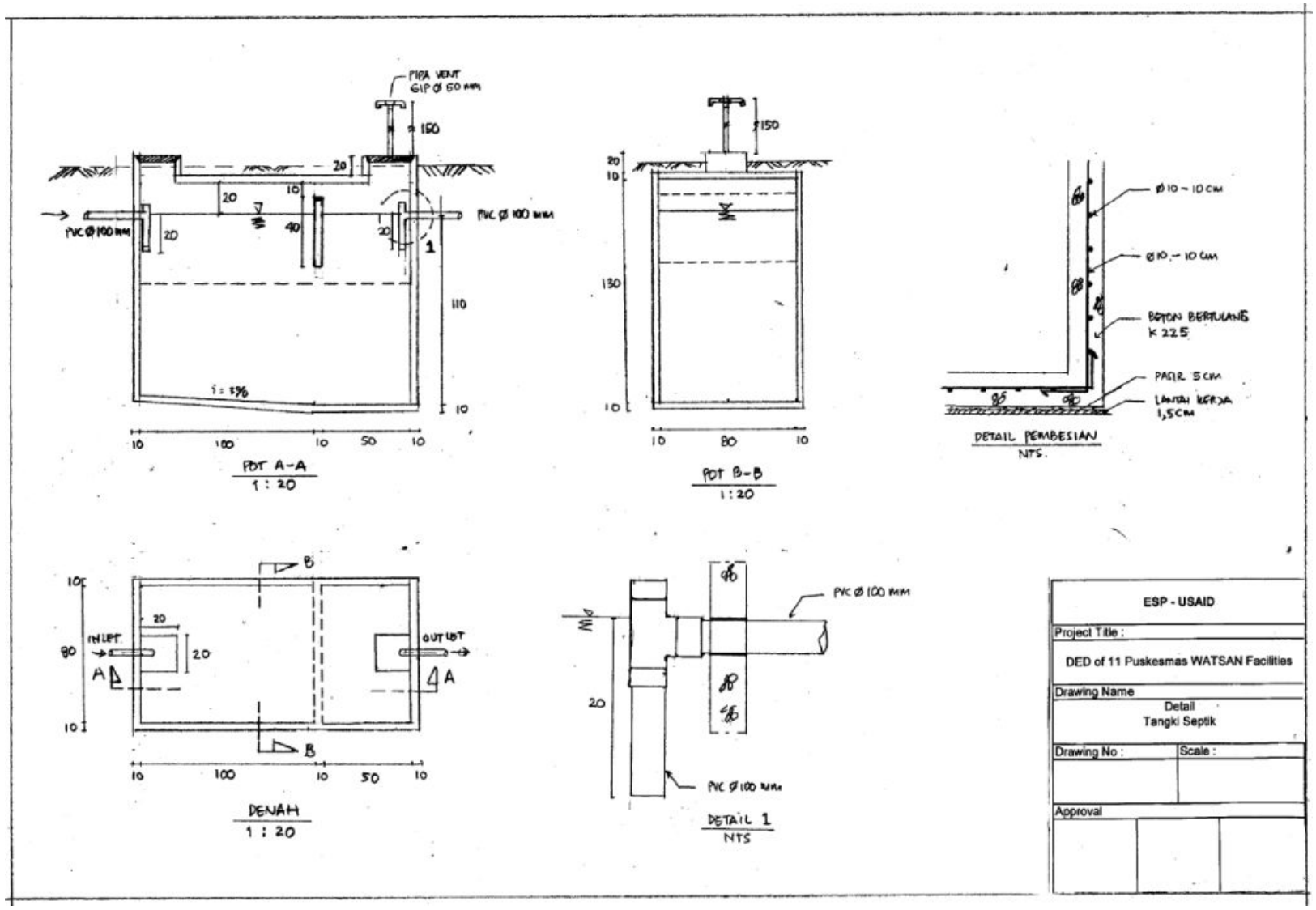
PIPA VENT GIP Ø 50 MM
150
PVC Ø 100 MM
PVC Ø 100 MM
20
10
40
110
i = 5%
10
100
50
POT A-A
1 : 20
130
80
POT B-B
1 : 20
Ø 10 – 10 CM
Ø 10 – 10 CM
BETON BERTULANG K 225
PASIR 5 CM
LANTAI KERJA 1,5 CM
DETAIL PEMBESIAN
NTS.
INLET
OUTLET
DENAH
1 : 20
PVC Ø 100 MM
PVC Ø 100 MM
DETAIL 1
NTS
ESP - USAID
Project Title :
DED of 11 Puskesmas WATSAN Facilities
Drawing Name
Detail
Tangki Septik
Drawing No :
Scale :
Approval

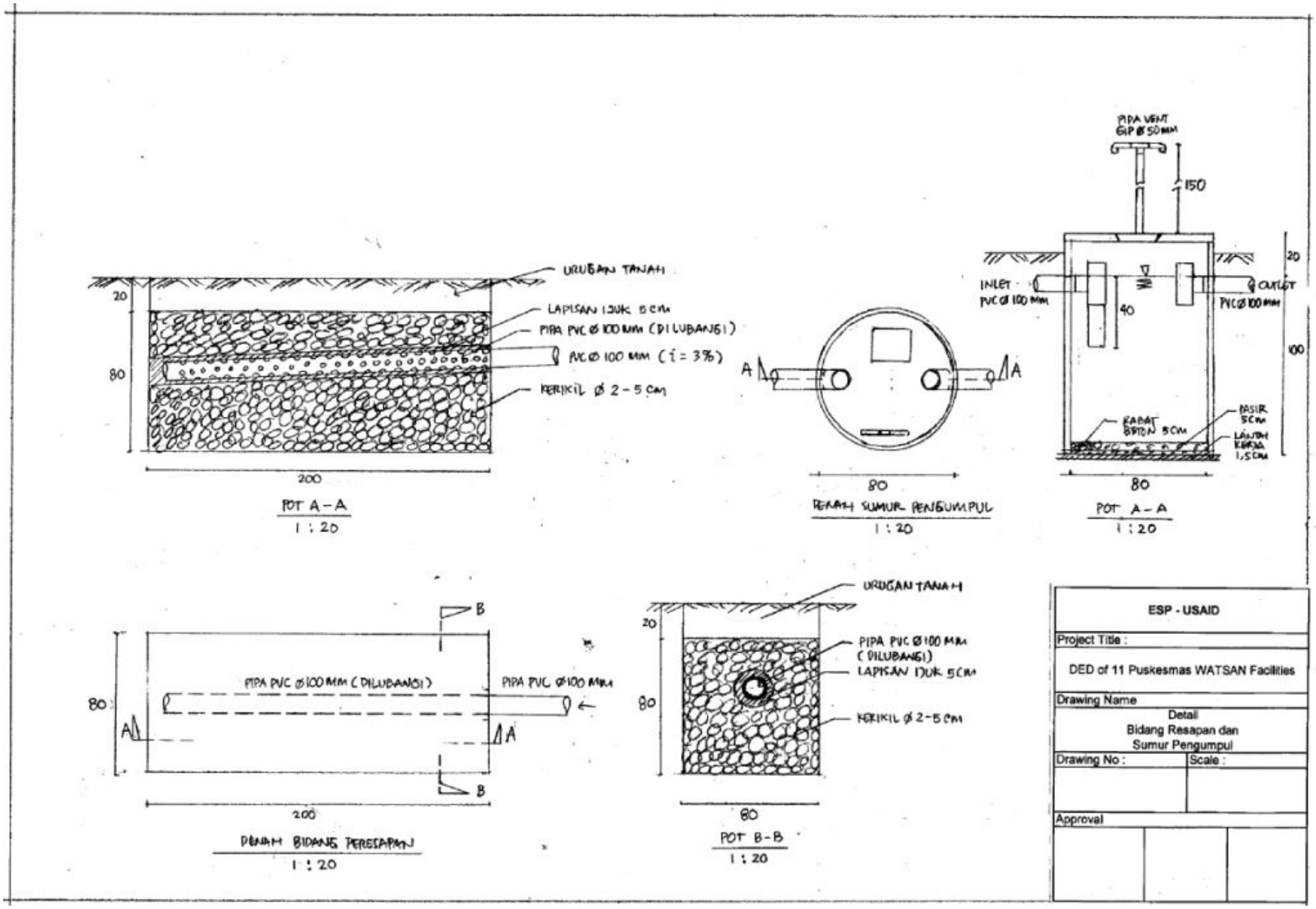
URUGAN TANAH
LAPISAN IJUK 5 CM
PIPA PVC Ø 100 MM (DILUBANGI)
PVC Ø 100 MM (i = 3%)
KERIKIL Ø 2 - 5 CM
20
80
200
POT A - A
1 : 20
PIPA VENT GIP Ø 50 MM
150
INLET PVC Ø 100 MM
OUTLET PVC Ø 100 MM
40
100
PASIR 5 CM
LANTAI KERJA 1,5 CM
80
POT A - A
1 : 20
80
DENAH SUMUR PENGUMPUL
1 : 20
PIPA PVC Ø 100 MM (DILUBANGI)
PIPA PVC Ø 100 MM
200
DENAH BIDANG PERESAPAN
1 : 20
PIPA PVC Ø 100 MM (DILUBANGI)
LAPISAN IJUK 5 CM
KERIKIL Ø 2-5 CM
80
POT B-B
1 : 20
ESP - USAID
Project Title :
DED of 11 Puskesmas WATSAN Facilities
Drawing Name
Detail
Bidang Resapan dan
Sumur Pengumpul
Drawing No :
Scale :
Approval

LAMPIRAN 6: FOTO-FOTO.

POLINDES NUSA

POLINDES LAMATEUK

POLINDES LAMGABOH

PUSKESMAS MIBO

ENVIRONMENTAL SERVICES PROGRAM
Ratu Plaza Building, 17th. Fl.
Jl. Jend. Sudirman No. 9
Jakarta 10270
Indonesia

Tel. +62-21-720-9594
Fax. +62-21-720-4546

www.esp.or.id