Contract Number: GBTI II Task Order No. EEM-I-07-07-00008-00

Contractor Name: Chemonics International, Inc.

USAID Technical Office: Office of Economic Opportunities USAID Pakistan

Date of Report: March 31, 2011

Document Title: Pakistan Dried Mango Industry Blue print for Success

Author's Name: Jim Krigbaum, CEO 2020 Development Co.
Beth Roberts, Consultant 2020DC
Melissa Krigbaum, Consultant 2020DC

SOW Title and Work Plan Action: USAID Pakistan FIRMS Project
USAID GBTI II IQC to #EEM-I-00-07-00008-00

The views expressed in this publication do not necessarily reflect the views of the United States Agency for International Development, the United States Government or Chemonics International Inc.

Data Page

Name of Component:	Potential for Dried Mango Industry in Pakistan with US Market Access and Linkages for Dried Mango
Author:	2020 Development Company LLC
Practice Area:	Economic Development

Abstract

Pakistan has significant potential to develop sustainable profitability as a global supplier of dried mangoes. In addition to developing sustainable exports, a viable dried mango industry in Pakistan will also have significant impact on small communities, families and producers in rural regions of the country. This report, in conjunction with earlier Firms/2020 DC reports ("US Dried Mango Market Analysis and FIRMS Approach" and "Dried mango market study results") form an industry wide blueprint for development of the Pakistani dried mango industry covering topics including global competition, identification of appropriate product for production and market linkages for exporters. In this report we recommend that USAID and other agencies and NGO's provide the visible hand of assistance to advance an industry to help minimize individual firm risk while developing sustainable business that has a positive impact beyond the sales that it generates.

This report recommends and outlines a strategy for assistance to Pakistani firms in the following areas – a) adoption of application of appropriate technology, b) securing processing equipment and c) marketing. Assistance in these areas will minimize the risk to individual firms that work to pioneer an industry which will have significant positive impact on the Pakistani economy, businesses, communities and individual families.

Abbreviations

SKU	Stock Keeping Units
VFF	Village, Family and Farm
USAID	US Agency International Development (USAID)
2020DC	2020 Development Company LLC
WFM	Whole Foods Markets
TJ's	Trader Joes

Table of Contents

Table of Figures 6
1.1 Executive Summary 7
2.1 Background 8
3.1 Industry structure 8
3.1.1 Dried mango production 8
3.2 Existing mango processors - overview 9
3.3 Fresh mango packers - overview 10
3.4 Village, farm or family (VFF) level - overview 11
4.0 Adoption of application appropriate product 17
5.0 Key to quality success 18
6.0 Product price survey 19
7.0 Analyze the production capacity and supply of Pakistan and price elasticity of raw materials 20
7. 1 Export Seasons of Mangoes from Key Selected Suppliers 23
8.0 Social benefits from increased dried mango production 23
8.1 Impact on women workers 23
8.2 Existing mango processors social benefits overview 25
8.3 Fresh mango packers social benefits overview 25
8.4 Village, farm or family (VFF) level social benefits overview 26
8.5 Process equipment requirements 26
9.0 Specific equipment 28
9.1 Equipment Summary 29
10.0 Necessary Training and standards 29
11.0 Summary of findings 30
12.0 Next steps and recommendations 31
12.1 Specific recommendations: 31
Appendices 33
Appendix A – Further links and research options 33
Additional research: 33
Appendix B SunSweet Standards 34
Appendix C Philippine process for handling dried fruit 35
Appendix D Philippine mango standards documents 36
Appendix E Improving the Operation of a Commercial Mango Dryer 37

Appendix F Drying Kinetics and Colour Change of Mango Slices as Affected by Drying Temperature and Time 38
Appendix G Technology International 39
Appendix H Example of Equipment Suppliers 40
Appendix I – Pakistan Agriculture & Biological Engineering Institute, NACRC, Islamabad 42
Appendix J - Basis Dried mango unit! 43
Appendix K - A Guide for the Construction of the dryit semi-continuous tray drier 44
Appendix L Practical Action Dryer – drawings 45
Appendix M – Mango Specifications 46
Appendix N Pakistan Dried Mango – Mongos from the Japan market 47
Appendix O GlobalG.A.P. Overview 52
Bibliography 53

Table of Figures

Figure 1 Eco Foods Dried mango in bag 8
Figure 2 Map of Pakistan with active areas in red 8
Figure 3Nawazabad Farms dryer 9
Figure 4 Agro Food Processing Multan 9
Figure 5 Agro Food Processing Multan 9
Figure 6 Circle of Driers - Albert Schweitzer 11
Figure 7 Dried white apricot and red apricot 11
Figure 8 Comparison of options 13
Figure 95 Bell Curve of demand for various drying formats 19
Figure 107 Empty shelf display for dried mangoes in Whole Foods - Bellevue WA. 22
Figure 211 Entrepreneur support 25

1.1 Executive Summary

Economic stability is critical for political and social stability. Therefore the U.S. Agency for International Development (USAID) works around the world to establish and support economic stability in developing countries. Building upon the principles of capitalism and mutually beneficial trade 2020 Development Company LLC (2020DC) has worked with a number of these projects and successfully achieved sustainable economic activity at the micro and macro level of economies. None of the efforts that 2020DC has been involved in to date have offered the scale of opportunity to achieve sustainable economic growth and the accompanying social and political benefits as much as our efforts on developing the dried mango business in Pakistan.

The global market for dried mangoes has been growing in recent years. The global supply has failed to keep pace with demand. Although global industry leaders of the Philippines and Thailand have been successful in establishing their export business, their production does not keep pace with demand. Other players in the global dried mango industry include Mexico, Peru, South Africa and even Burkina Faso; however the combined supply falls short of demand and major retailers like Whole Foods Markets (WF) often suffer from lack of supply to their stores.

Pakistan is the 5th largest mango producer in the world yet has not significantly entered the dried mango industry. This is a result of many factors including the lack of a domestic market for dried mangoes, lack of global export trade in mangoes and political instability.

Pakistan possesses the necessary resources to achieve success in the dried mango industry. Raw materials are abundant estimated at 180,000 tons annually (Valentine 2010). Labor is abundant, underutilized and less expensive than major competitors (Thailand and the Philippines). Entrepreneurs are well educated, have sufficient resources and are interested in developing new industries.

The Pakistan dried mango industry requires the visible hand of assistance to minimize a single company's exposure for being on the bleeding edge of the new industry development. Developed countries use universities, departments of agriculture and industry associations help develop an industry through funding research, extension and other business development support activities. In Pakistan these institutions exist, still, they lack the resources and global vision necessary to support a new industry. Therefore the role of assistance must come from agencies and organizations like USAID.

We recommend assistance by USAID and others in the following areas:

a) Adoption of application of appropriate technology
b) Securing processing equipment
c) Marketing – product definition, packaging and market linkages

Assistance (a) and (c) above is industry wide assistance which will assist the dried mango cluster in Pakistan. Assistance (b) is designed to help build a company, cooperative, village or family into the market leader which others will follow to achieve similar success.

If properly executed the assistance that USAID provides for the dried mango industry will accomplish many objectives of USAID more efficiently than other interventions and assistance. If the objectives of the program are to impact the greatest number of people in the economically challenged areas of the country, working with this program will be a cost efficient means of achieving this objective. We recommend involvement at the commercial level, packing house level and farm level. This three pronged approach allows for capitalization of various strengths while achieving the greatest positive impact to the widest number of individuals.

Rural poverty and the associated social and political implications that impact it are part of the impetus for USAID involvement in Pakistan. USAID's goals are to reduce rural poverty, improve the standards of living in rural areas and to promote communities and government stability. Developing a dried mango industry can impact producers from the developed south to the most remote areas in Pakistan to the north.

The technology for processing mangoes into dried mangoes is a relatively simply process. The primary focus is time and temperature and the technology that can be as basic as solar drying or as advanced as osmosis drying with sugar, ascorbic acid, sodium metabisulfite, irradiation and other technologies to preserve color and shelf life. This allows rural areas where lower levels of technology can be applied to produce an acceptable quality mango. While the quality of the product produced in 2010 by Eco foods and provided to 2020DC has a market in the USA, although that market is admittedly limited due to the relatively small niche of the product. In fact, the USA market for dried mangoes covers a wide range of products – all of which can be produced in Pakistan and sold into the global market.

Figure 1 Eco Foods Dried mango in bag

2.1 Background

This report is the fourth stage of a comprehensive study on the viability of establishing a dried mango industry in Pakistan. Earlier efforts in this area include 1) production feasibility study by Jim Valentine; 2) global market review and niche identification; 3) sample distribution and buyer/consumer response to samples produced in stage 1. This report incorporates the findings in the three earlier stages to build a blueprint for development of the dried mango industry in Pakistan.

Figure 2 Map of Pakistan with active areas in red

With the 5th largest fresh mango crop in the world Pakistan has significant potential for becoming a major player in the global dried mango industry. For the past year the USAID FIRMS project has been performing due diligence to determine the viability of a dried mango industry in Pakistan.

This document provides a blueprint for moving the concept of a Pakistani dried mango industry to the reality of achieving the greatest potential for the industry.

Commercial dried mango production with exports to Europe exists through the efforts of Nawazabad Farms of Karachi.

This operation is a joint venture with a German importer who helped supply the equipment and technology. Product from Nawazabad is said to be certified organic by Control Union - http://certification.controlunion.com/Default.aspx

3.1 Industry structure

3.1.1 Dried mango production

The fact that Pakistan currently has a limited no dried mango industry allows for the adoption of a strategy that defines current and forecasts future objectives of the industry without concerns about existing infrastructure or other impediments that may exist in a mature industry.

Dried mango production can take place in three unique sectors of the market.

1. Existing mango value added processors or other food processors
2. Fresh Mango packers – many of whom have already received assistance from USAID in the form of technological assistance and equipment acquisition.

3. Village, farm or family level.

Each of the levels mentioned above will require entrepreneurial involvement in order to energize the program and move it forward while providing a profit motivation to ensure the efficiency of the industry and a sustainable business. The industry is young with only one company currently producing dried mangoes – Nawazabad Farms. As Nawazabad Farms succeeds and other entrepreneurs enter the industry, a cluster will form behind the leaders and success will be driven by entrepreneurs pushing for profits. Without the visible hand of assistance to help clarify the opportunities and define the risk the industry would be slow in developing. In developed countries, universities and industry associations perform the role of research and development. In Pakistan and other developing countries this role is often picked up by the development industry. Items one tothree, while support is required to get them started entrepreneurs will ensure their long-term success. (See Entrepreneur sidebar on figure 21)

3.2 Existing mango processors - overview

The easiest sector to develop a basis for the dried mango industry is to work with an existing food processor. Pakistan has a sophisticated and advanced food processing, distribution and retailing industry. While in Pakistan in March of 2011 I had the pleasure to meet with two food processors that would have the ability to add dried mangoes to their processing line and product mix.

Figure 3Nawazabad Farms dryer

Popular Foods in Karachi is one of the three value added mango processors that I met with while in Pakistan. Being extensively involved in the processed (value-added) mango industry with annual usage of 5,000 metric tons of mangoes for production of puree, Juice and other food product Popular Foods is well suited for expanding their product mix to include dried mangoes. Working with an existing processor of value added mango products, like Popular Foods, eliminates the need for involvement in several areas of the business that will be required when working with companies that do not already have mango processing experience. For example the existing value added mango processors will require less support in the acquisition and handling of raw materials. Less assistance will be required in food technology and HACCP, GAP and other practices already in place at the food processors that have mango processing experience. The support provided to a company like Popular Foods could be limited to marketing support, including package design and market linkages. (Popular Foods produces more than 500 million aseptic juice packages during and processes mangoes for 3- 4 months during harvest.)

If Popular Foods can be confident in the market for dried processed mangoes they would require less assistance than the other demand chain options.

Figure 5 Agro Food Processing Multan

Agro Foods Processing Facilities in Multan is a joint venture between local mango growers and the national government. In 2010 they processed 11,000 MT of mangoes with 600 MT of those going into aseptically filled drums, of which they have sold 2,500 drums domestically and have remaining stock of 500 drums. They have the ability to process fruit puree and could accommodate dried mango production in their current facility. They operate as a

Figure 4 Agro Food Processing Multan

co-packer that produces product on behalf of their grower/members; however they do not get involved with the marketing of the finished goods. They have much of the infrastructure necessary to support a dried mango production facility.

Nestle, Shezan, National Foods, and Coca Cola are also involved with the mango juice industry and Nestle has had some discussions with the Pakistani Council of Scientific and Industrial Research (PCSIR) about dried fruit processing in the Northern regions of Pakistan. Discussions should be opened with Nestle, Coke and other mango processors to determine their interest level and requirements for entering the dried mango processing and marketing industry.

3.2.1 Possible USAID assistance at the food processor level

With any of the food processors mentioned above, or others with similar characteristics or resources, the involvement of USAID can be focused on providing technical assistance in processing and marketing. It is probably not necessary for the FIRMS project to be involved with financing equipment providing resources or coordination of procurement of raw materials.

3.3 Fresh mango packers - overview

The USAID FIRMS project is already working with fifteen (15) medium sized orchard owners to establish their on-farm fresh mango sorting and packing operations. It would be an easy horizontal extension for these packers to add drying capability to their existing operations. The addition of a drying operation at these farms would allow for leveraging of resources and would strengthen those companies with whom the project has already worked to build their business. The addition of drying would leverage labor, facility and relationships. However, the demand chain and marketing channels for fresh product and value added products are different and not necessarily complementary. These firms may not be able to export the dried mangoes directly, and seldom to the same buyers as their fresh buyers. Therefore, these companies may benefit from the services of an export trading company or food trader.

Developing mango packers into processors of dried mangoes requires more involvement and support than working with an existing value added processor. However, the size and existing infrastructure of with the orchards with packing houses provides for some economies of scale and familiarity which will allow for relatively rapid development of the operations.

The area where Mountain Fruit works produces the white apricot pictured above that could be processed in the same drying system as dried mangoes and the addition of another product to the dried fruit offerings of the company and its members would be synergistic with the dried mangoes.

3.3.1Possible USAID assistance at the packing house level

Making fresh packers successful in the value added mango processing will not be accomplished as easily as working with companies that are already producing value added mango products. Assistance to these growers/packers will require more extensive technology transfer, training, financial assistance and possible coordination of raw material supply to supplement their own orchards and current supply channels.

Fifteen (15) farms in Pakistan are receiving assistance through USAID (50/50 cost share) purchasing of the equipment for fresh mango sorting, grading, processing and packing. The equipment is manufactured by Technology International (TI) of

Faisalabad (www.TI.com.pk). TI is a manufacturer of industrial equipment including a wide range of autoclaves, which utilize sterilization and drying techniques similar to what would be required for mango drying technology. (For more details on TI see section 9.0)
The fresh fruit packers will require differing degrees of assistance in the following areas:

1. Technical assistance to identify the appropriate technology for their process
2. Financial assistance in the procurement of the equipment
3. Training for proper utilization of the equipment to produce the "right" product to meet the market demands.
4. Marketing assistance starting with product development, packaging and market linkages

Burkina Faso rural dried mangoes sold at Starbucks!

Cercle de Secheurs (CDS), or the Circle of Driers – works cooperatively with rural communities to produce dried mangoes that are currently sold at Starbucks!

3.4 Village, farm or family (VFF) level - overview

The development of a demand chain that starts with villages, farms and families would have the greatest impact on those who are at the lower rungs of the economic ladder and provide USAID support to those areas which are most in need. Through the implementation of a village/farm/family level drying system the economic impact of the global dried mango industry will provide sustainable income to rural farmers and farm families.

Figure 6 Circle of Driers - Albert Schweitzer

This effort would accomplish many USAID objectives at the most needed level. It is the effort which will require the most resources of time (labor), however, it may possibly not require more funding than the other options due to the small scale of the operations and they synergy of cooperation.

Under this program USAID would purchase portable dryers that would be moveable from village to village, farm to farm and family to family. A local entrepreneur would drive the program- many local businessmen discussed this as an option during my visit. In cooperation with local institutions, USAID and other organizations the entrepreneur would provide technical assistance to the processors and a market for their finished product. This type of operation has been successful in Burkina Faso – see text box to right.

Working with the Burkina Faso project is a UK based firm Tropical Whole Fruit. This company is currently working in Pakistan with their purchase of Hunza Mount apricot kernels through the Mountain Fruit project discussed below. They should be interested in adding Pakistani dried mangoes to their mix and could be big help in getting this project started and supported by demand. http://www.fmfoods.co.uk/tw/Products_Fruit.htm

Figure 7 Dried white apricot and red apricot

The equipment provided by USAID would be able to follow the harvest and would also be utilized at the local level for processing of other dried products. In fact the same drying equipment can be utilized for dried dates. In 2009 Pakistan exported USD 46.3 million in dried dates with more than 8,000 shipments per year of dried dates into the USA, placing Pakistan # 8 on the USA dried date supplier list, with an increase of nearly 1% in the last 12 months. (www.panjiva.com, 2011) Many other products can be produced with this equipment that can be marketed outside of Pakistan (like a dried white apricot) and others which could be sold domestically (like dried herbs, spices, other fruits and vegetables.)

The cooperation with local extension services provided would help strengthen these institutions and their extension efforts. The groups could include – Pakistan Council Scientific and Industrial Research (PCSIR), Bahauddin Zakariya University in Multan, the Pakistan Horticulture Development and Export Company in Lahore or the Ayub Agriculture Post-Harvest Research Center in Faisalabad.

The VFF program could also work in cooperation with a partner such as Mountain Fruits (pvt) limited. Mountain Fruit is active in the Fair Trade Federation (FTF) production of dried fruits in the northern areas of Pakistan. With the support of the Aga Khan Rural Support Program Mountain Fruit began in 2000 as a fruit drying training program for communities to improve traditional, unhygienic fruit drying system in the northern areas of Pakistan. This allows the disadvantaged, small farmers may organize themselves, produce a product that meetings international quality standard and should be able to sell it under Fair-trade mark to generate more income. They have developed a solar electric dryer for more efficient drying techniques than traditional solar drying. In 2008 the company has 4,500 contract small farmers organized in to 78 village organizations. USAID efforts could be utilized to support and expand this program or simply to work with its people to learn from their successes.
Assistance at the Village, Farm or Family level would require the following:

1. Identification of an Entrepreneur to cooperate with this program,
2. Possible cooperation with Mountain Fruit, Tropical Organic or others.
3. Identification of the appropriate technology for use at the VFF level
4. Financing of equipment – due to the low level of technology would not be a significant cost per unit
5. Technical assistance – train the trainer – on the technology for drying mangoes and other fruit
6. Marketing assistance to the Entrepreneur to ensure that he is going to have a market for the product.

Existing Food Processors

- Existing facilities and other resources
- Least technology assistance required
- Self financed
- Existing supply channel and domestic markets
- Export marketing assistance required
- Urban setting

Packing house dryers

- Facility exists but investment required to include value added processing
- Technology assistance required for production techniques
- Financial assistance required
- Supply and marketing assistance required
- Rural setting

Village, Farm, Family

- Greatest number of families impacted
- Investment in equipment required
- Entrepeneur required to coordinate quality and supply
- Greatest story for marketiung opportunities
- Possible cooperation with other NGO or agency

Figure 8 Comparison of options

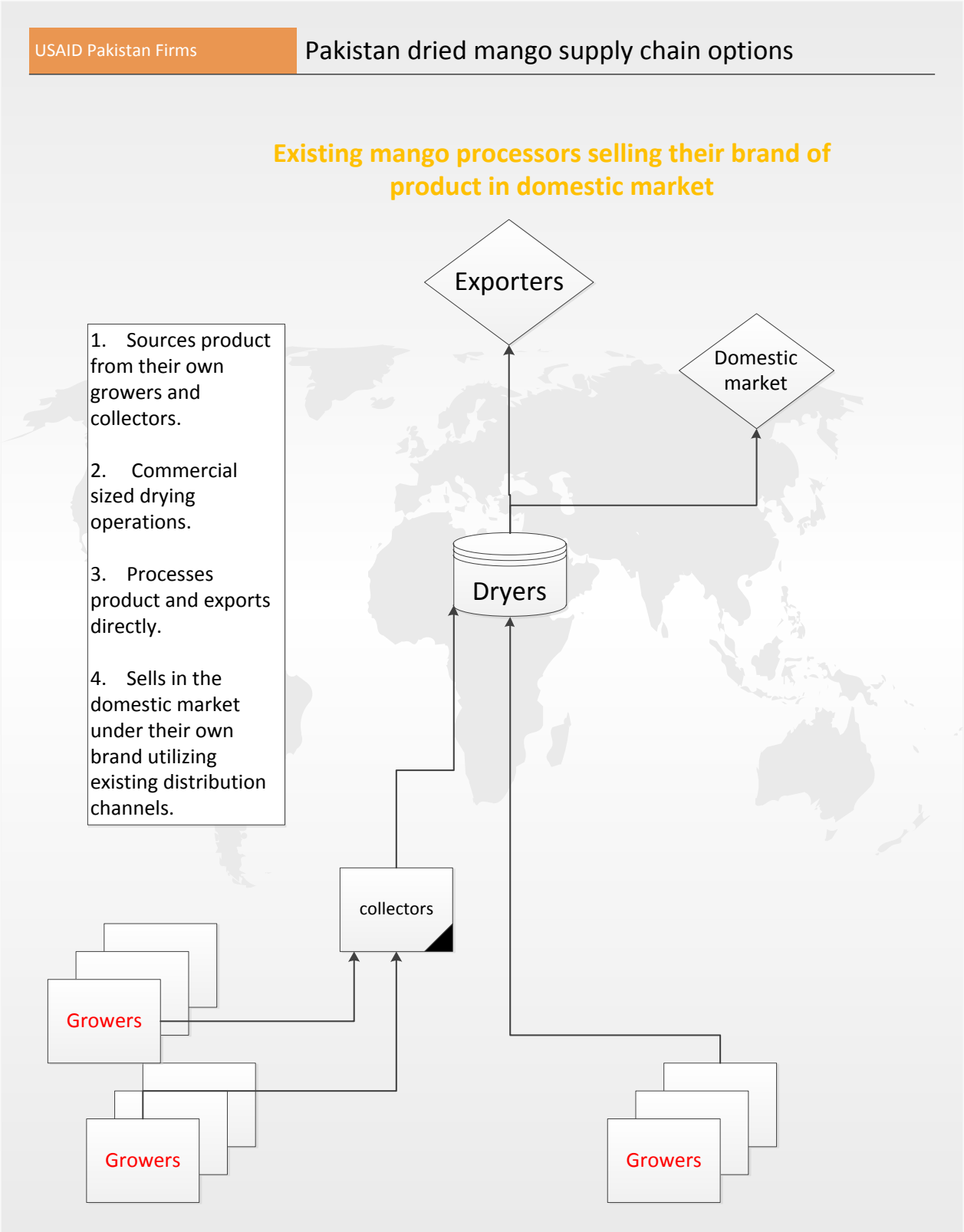

Figure 11 Supply Chain through existing processors

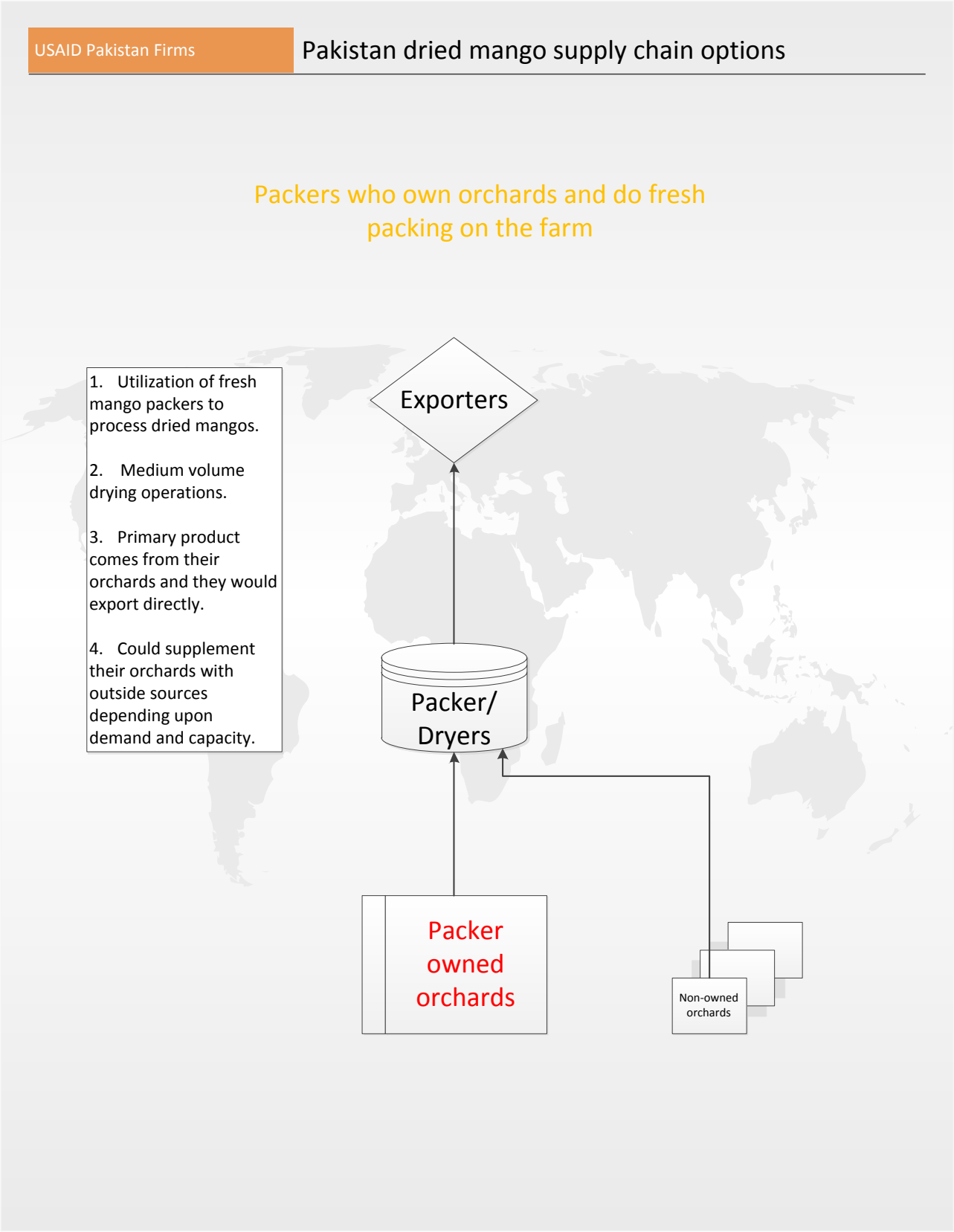

Figure 12 Supply Chain through packers

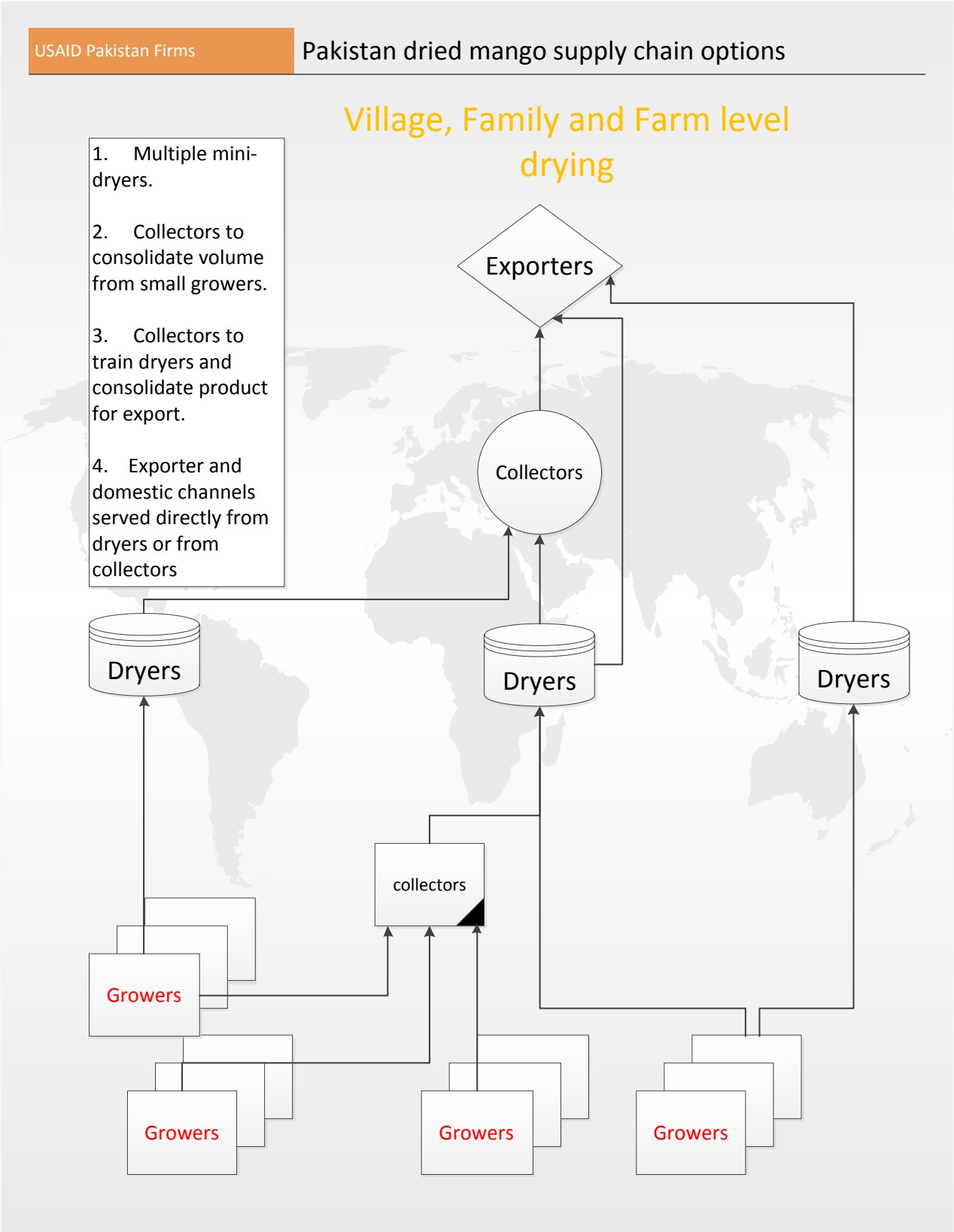

Figure 13 Supply Chain through VFF

4.0 Adoption of application appropriate product

The global market for dried mangoes varies from sugar and color infused to natural and organic product. The chart and table below reflects the price and quality relationship. Different levels of product are sold at different retailers to reflect their customer base. Pakistan has the potential to produce at all levels of dried mangoes. The technology for each production is similar with the primary variances being time and temperature. The natural characteristics of the fresh mango will impact the efficiency to produce the product and the quality of the finished product. Research and experimentation needs to occur to determine the best variety from the cost and marketing prospective.

There are several mango varieties available in Pakistan including:
1) Chanusa (Summer Bahisht)
2) Sindhri
3) Chaunsa White
4) Chaunsa Black
5)Dushari
6) Langra
7) Anwar Ratool
8) FajriEach variety has a different brix level, ranging from 11% in Dushari variety available in Sindh to 24% in Chaunsa. The brix level and the moisture will impact the efficiency of processing and quality of finished product. Through experimentation the processors will find that one variety may be best suited for production without preservatives and sugar while another variety may be better suited for production with these additives. There is a market for both options.

At this stage in the development of the Pakistani mango industry it is too early to determine which of these varieties will best produce the quality that the market desires and provide the best economic return to the demand chain. Tenure of availability of the various varieties will also be a concern as many varieties have only a 20 – 25 day window of harvest and market.

It is recommended that during the 2011 harvest packers work with each variety and maintain their own records on the characteristics of the fruit and the relationship to finished dried mangoes. They should include consideration of the following points;

1. Ease of handling
    a. Sorting
    b. Peeling
2. Efficiency of drying
3. Quality of final product
    a. Moisture
    b. Color
    c. Texture
    d. Flavor
4. Yields
5. Customer responses

These results should be gathered, reported and shared in a scientific manner in order to determine what works best for the overall production and returns.

5.0 Key to quality success

In order to be successful on a large scale it is important that Pakistani producers produce a product that is in the bulk of the market as outlined in the chart below.

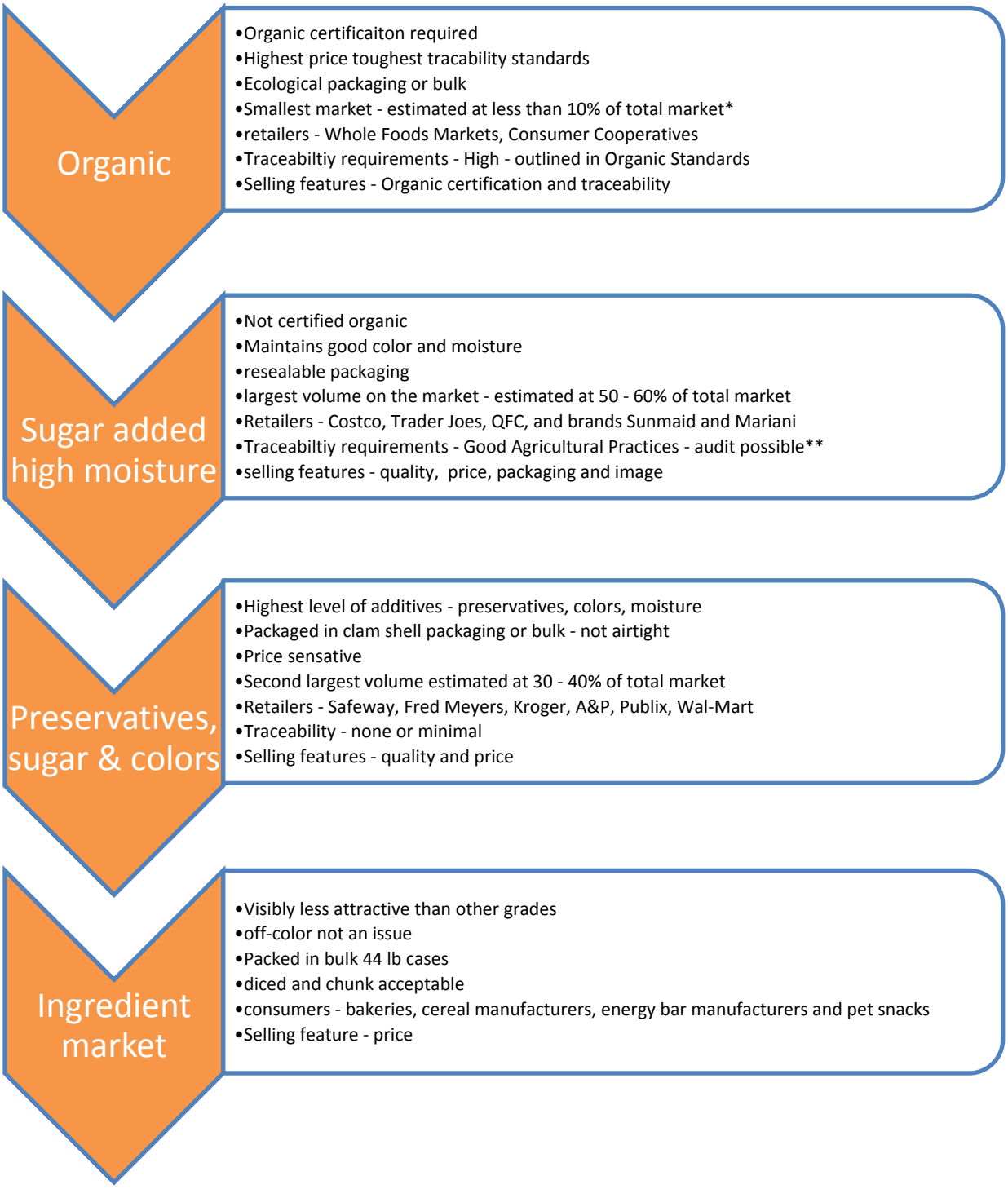

Figure 14 Keys to quality success

* Estimated market share based upon analysis of exporters, importers and associated quantity. For details on exporters and importers refer to report "US Dried Mango Market Analysis and FIRMS Approach" by 2020DC 2010

** For standards utilized by Appendix B and the Sunsweet Dryer Certification Guide, Appendix C Philippine process for handling dried fruit and Appendix D for the Philippine mango standards documents.

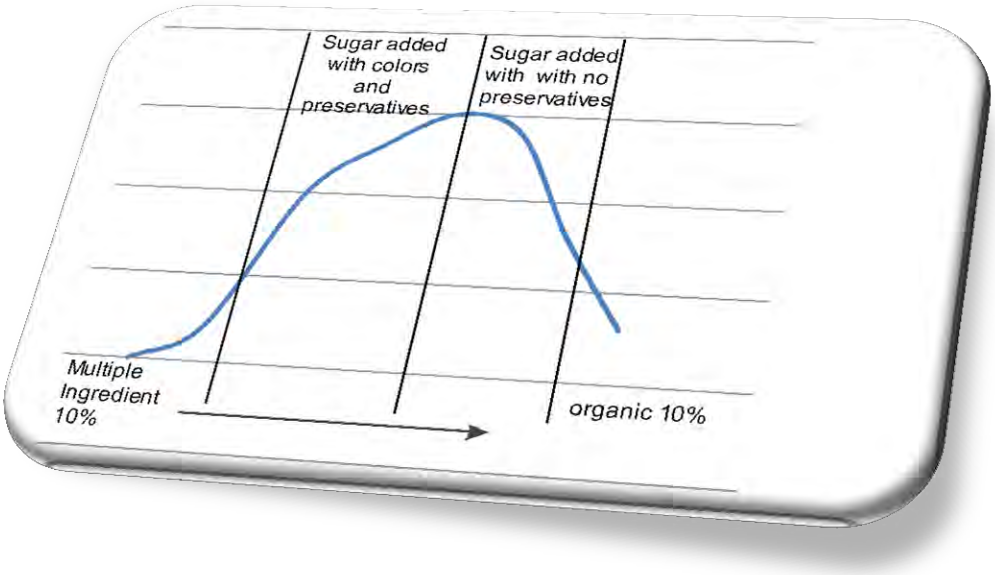

Figure 95 Bell Curve of demand for various drying formats

The above bell chart reflects how the market encompasses and moves from left to right in quality moving from the ingredient quality product as a small percentage of the market to the bulk of the market being sugar added with colors and preservatives moving further right and up in volume to sugar added no preservatives. At the lower right we can see organic product being a smaller yet significant part of the market.

Organic product sells at a significant premium in comparison to conventional. For example the Whole Foods Organic product sells at .9082 per oz. while their conventional product sells for .3119 per oz., which is in line with the price of Trader Joes Just Mango product. This is a premium of three to one for the Whole Foods products. Of interest, is the fact that the Whole Foods Organic product sells for less than the Mariani brand at Safeway and QFC. (Mariani owns their own mango packing facility in The Philippines.) This illustrates the value of the marketing done by Mariani and their brokers as Marini does not ship directly to most retailers.

6.0 Product price survey	Weight	Origin	Unit Price in USD	Per oz.
Safeway				
SunMaid Tropical Trio (Pineapple, Mango, Papaya)	7oz	Thailand	3.49	0.4986
Safeway	6oz	Philippines	3.99	0.665
Mariani	4oz	Philippines	3.99	0.9975

QFC				
Mariani Island Fruits (P, Mango, P)	6oz	Thailand	3.99	0.665
Mariani	4oz	Thailand	3.99	0.9975
Bare Fruit (Organic Bake-Dried Mangoes)	2.6oz	Mexico	3.29	1.2654
Trader Joe's				
Chile Spiced Mango	8oz	Not Given	1.99	0.2488
Just Mango	6oz	Mexico	2.09	0.3483
Freeze Dried Mango	1.7oz	Thailand	2.69	1.5824
Green Mango	6oz	Philippines	2.49	0.415
Fred Meyer				
Natural Choices (Bulk)	N/A	Thailand	5.29/lb	0.3306
Mariani	4oz	Thailand	3.49	0.8725
Mariani Island Fruits (P, Mango, P)	6oz	Thailand	3.49	0.5817
Costco				
Kirkland Dried Mangoes and Berries	22oz	Philippines, USA, China	8.79	0.3995
Philippine Brand	30oz	Philippines (Profood)	10.59	0.353
Kirkland Fruit and Nut Medley	56oz	Philippines, Thailand	11.79	0.2105
Whole Foods				
Funky Monkey MangOJ	1oz	Brazil	2.29	2.29
Florida's Natural Pocket Fruit Mix	1.75oz	China	1.69	0.9657
Whole Foods Organic	11oz	Not Given	9.99	0.9082
Whole Foods Tropical Fruit Mix	14oz	Not Given	5.99	0.4279
Bulk bin - low sugar	1lb	Not Given	4.99	0.3119
PCC				
PCC Slices	8oz	Thailand	3.09	0.3863
PCC Organic	4oz	Thailand	3.09	0.7725

7.0 Analyze the production capacity and supply of Pakistan and price elasticity of raw materials

Even if the industry is able to achieve extraordinary success in the production and marketing of dried mangoes securing raw materials for production of dried mangoes is not going to problematic in Pakistan for the foreseeable future. Pakistan produces 1.8 million tons of mangoes a year with an estimated 20 percent to 40 percent that do not reach the market. This waste in the supply chain is due to many factors including market glut, poor post-harvest handling and logistics.(Valentine, 2010)

What this means for the dried mango industry is that at a minimum there are 360,000 tons (20 percent of total harvest) available for processing into dried mangoes. Being processed on the farm or in the packing house eliminates logistics problems faced with getting fresh mangoes to the market. With a fresh to dried fruit ratio of tweleve to one (Valentine, 2010) this would provide 30,000 tons of product. In 2009 the

USA imported 5,420 tons of dried mangoes (Krigbaum, 2010). Therefore even if these numbers are inaccurate – which may be the case given the nature of the production and trade statistics as discussed in "U.S. Dried Mango Market Analysis and FIRMS Approach"– the unprocessed mangoes available for product exceeds existing total demand. The demand influences will not push the limits of supply.

Thailand is a "mature" market for exports of fresh and processed products. In Thailand the breakdown of export revenue breaks down as follows:

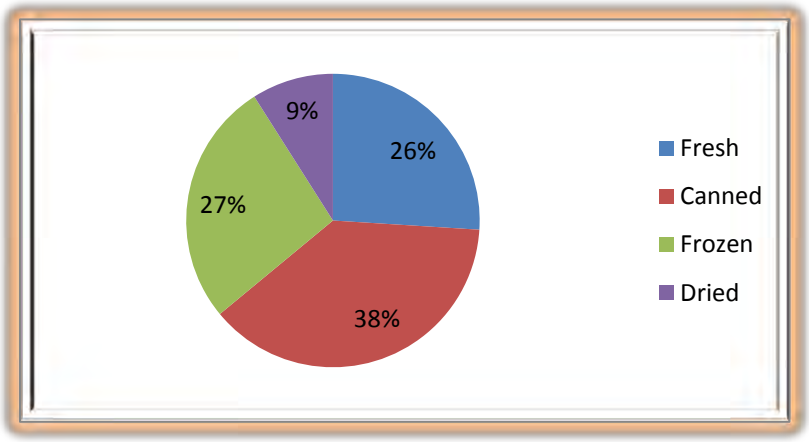

Figure 16 Pie chart of Thailand mango export volumes for various formats

(Postharvest Technology Research Institute (PHTRI) Chiang Mai University, January 2009)
Until 2002, fresh mangoes exports exceeded value added/processed mango exports in Thailand. In 2002 this changed as value added mango export value exceeded that of fresh mangoes. This was caused in part by the significant growth in dried mango exports.

As a leader in mango trade Thailand has diversified their exports to include dried mangoes in their portfolio of trade. This fact helps illustrate that attention should be paid to a diverse portfolio of products and the importance of a dried mango production strategy.

Drying mangoes can occur when product is at its peak season and fresh markets are unavailable due to the surplus of product – glut – on the market. The Chaunsa variety of mango is the most popular in Pakistan in the fresh market. Unfortunately the harvest window is only about thirty days, therefore, when it is available it is in a glut situation and when it is out of season it is not available. Converting a portion of the fresh mangoes in a glut market into dried mangoes will a) avoid waste of the surplus product and b) take some of the product off the market and adjust the supply. This shifts the supply to the left and brings a new equilibrium price on the supply/demand graph.

WITH GLUT Fresh Mango Market

Equation 1 - Reducing available fresh supply and resulting shift in price

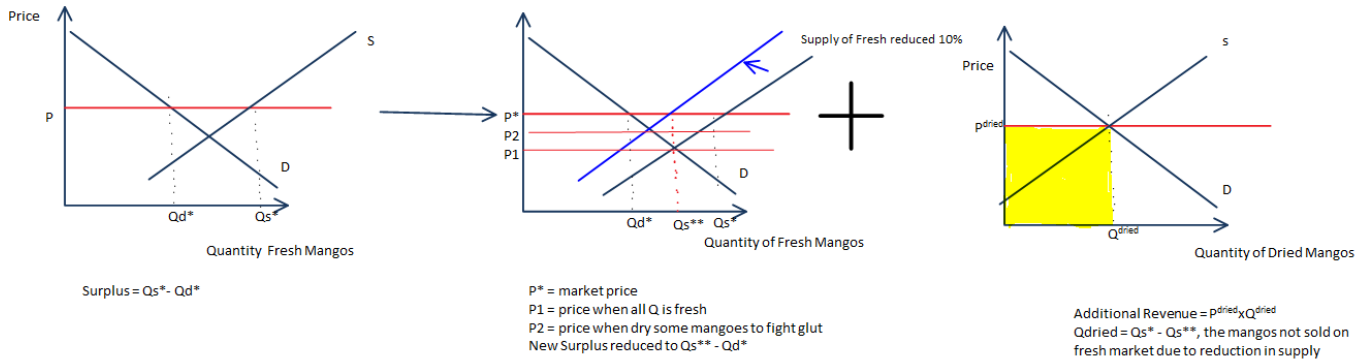

Drying mangoes and other value added mango products should be an integral part of the overall mango industry in Pakistan. This assignment was not to review the entire mango industry supply/demand chain (Puree, pulp, fresh, canned and dried)but to determine if there is sufficient raw materials to support thea dried mango industry. With the large size of the crop and significant waste at the farm and market level it is important that the industry work on alternative uses for their product to complement the fresh industry. Dried mangoes are a key to industry wide success and diversity in the mango sector.

Pakistani fresh mangoes have a window of opportunity in the global market. They compete with mangoes of other origins during their harvest. Importing nations have global options when securing their fresh mangoes. Pakistan has to compete when they have product available and due to limited shelf life unsold product is wasted product. Fresh mangoes are shipped all year round from different origins which are competing in a market during their window of opportunity. At that stage it is a price market with the best available price getting the business. For example, Cote d' Ivoirehas a very similar production window to Pakistan's. If they have a bumper crop they will have lower prices and therefore beat out Pakistan on the market.

On the other hand, dried mangoes ship year-round yet retailers in the United States cannot procure sufficient quantities of dried mangoes to meet their needs.

Figure 107 Empty shelf display for dried mangoes in Whole Foods - Bellevue WA.

7. 1 Export Seasons of Mangoes from Key Selected Suppliers

(Postharvest Technology Research Institute (PHTRI) Chiang Mai University, January 2009)

8.0 Social benefits from increased dried mango production

The level of social benefits will depend upon which option or portfolio of options the project chooses to

Mango Supply	Jan	Feb	Mar	Apr	May	Jun	Jul	Aug	Sep	Oct	Nov	Dec
Brazil												
Mexico*												
Peru												
Costa Rica												
Ecuador												
Bukina Faso												
Cote d' Ivoire												
Mali												
South Africa												
India												
Pakistan												
Philippines												
Thailand												
Israel												
Egypt												

Figure 18 Global fresh mango harvest grid

pursue. The closer to the village, farm and family the project chooses to work, the more individuals the program supports. The larger the partner that the product works with the quicker the results and the better visibility the project receives. However, in this scenario a smaller the number of targeted families is affected.

8.1 Impact on women workers

Figure 19 Women leaders at FIRMS meeting

Much of the work done in the dried mango processing facility can be handled efficiently by women. The harvesting of mangoes is a job where strength of the worker is a prerequisite for success. Working with the mango drying operation is not as physically demanding work as harvesting as it requiring dexterity,

nimble hands and stamina to do the work on your feet for several hours. In the Burkina Faso project 80% of the workers on the program are women and they are exporting more than 200 MT of dried mangoes per year. While cultural differences may prevent this from occurring in Pakistan it is fully within the scope of this operation of a dried mango facility to have the majority of the workers women. (Center Ecologique Albert Schwertzer, 2009)

The mango peeling and slicing operation can be mechanized; however, Valentine estimated this cost to be in excess of $100,000 USD. (Valentine, 2010). In a country like Pakistan with low labor costs and high rate of unemployment, the use of labor would be less expensive than mechanizing.

Estimates on the yield efficiencies of mango peeling vary; however, it is universally accepted from a physical and capability standpoint that this can be accomplished without considerable strength. Available estimates on processing are as follows:

Table 1 Mango peeling

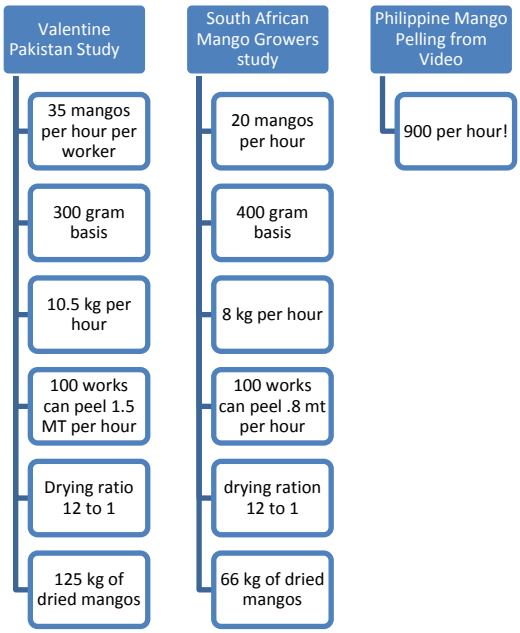

(Valentine, 2010)(South African Mango Growers Association, 2008)

Figure 20 Mango Peeling at Nawazabad Farm

The ProFoodsproduction line in the Philippines is videotaped on youtube.com reflectingthe production line peeling 21 mangoes in 1:20 seconds! That is nearly four seconds per mango, which would equate to 900 per hour! This video can be seen at http://youtu.be/M4n4WRFxDZg. While this cannot be expected the VFF level it should be achievable at the fruit processor and the packing house level with minimal mechanization (conveyor belt, gloves and sharp knives!) and still capitalizing on low labor rates. Additional views of the Profood processing plant can be found at http://youtu.be/_6zlEWP3wFA. If anything approaching the numbers from the Philippines can be achieved in Pakistan the cost of production at all levels decreases significantly!

It is recommended that during the first several years of processing that each packer keeps accurate records on the labor required to peel and slice the mangoes with particular attention to time and yields of each variety. This will help them identify the best variety for efficiency of peeling, slicing and drying.

No matter which of the three intervention options, the project decides to follow coordination and support from the following groups will be critical:

South Punjab Women's Chambers of Commerce and Industry (SPWCCI)
Sind Women's Chamber of Commerce and Industry (SWCCI)
Sind Mango Growers' Association
Multan Mango Growers' Association

In many developing economies finding entrepreneurs to support the BDS efforts is the toughest task. In 2020DC's experience with market linkage efforts we often find that we can plant the ideas and define the opportunities, yet fail to find local entrepreneurs to take the ideas and run forward with them to develop sustainable work.

In Pakistan we found many competent businessmen who are anxious to take the ideas we present and develop them into sustainable businesses.

For Example the early work done by Dr. Fayyaz Ahmad of Eco Foods, or the initial cost calculations prepared by Zhauzab Gardezi and the design work done by Technology International are critical pieces of the development puzzle which Pakistan has which helps to ensure success.

Figure 211 Entrepreneur support

8.2 Existing mango processors social benefits overview

While working with an existing food processor may be the most cost efficient and least expensive way for Pakistan to enter the dried mango market it will have the smallest impact on the lower economic levels of society. An existing packer will have much of the infrastructure in place and will have marginal investment in equipment and labor. They will, most likely, be located in an urban location and therefore involvement of women as workers will be limited to the norms of the urban environment.

Due to the economics of labor rates vs. equipment costs it is doubtful that an existing mango processor would make the investment to purchase machinery to mechanize the peeling and slicing process. Therefore, they will hire sufficient labor to support their production of dried mangoes. Given that their capacity will be greater than the other two options (packer processor and VFF) they will need to hire significant temporary labor to handle the peeling and slicing operations, or perhaps they will retain workers who would otherwise be idle at this time. This would accomplish the same labor benefits as hiring new workers.
\

8.3 Fresh mango packers social benefits overview

Operating the mango drying operation at the packer level provides a greater impact outside of urban areas and will have a greater impact on those with few economic options. The packing houses will employ local workers; many depend solely on the orchard for their livelihoods. If they are packing fresh and dried mangoes at the same time, which is most likely to happen, they will need additional workers rather than extending the employment of those that they currently hire for their harvest and fresh packing operation. The technology utilized at the packing house level is very likely to be less mechanized than that utilized at the food processor and, will therefore require more manual labor. The fresh mango packing plant will also require additional marketing staff to support the sales of dried mangoes. This will require a different skill set and different customers than those for the fresh product and therefore may also result in added employment at the management level.

8.4 Village, farm or family (VFF) level social benefits overview

Designed properly, this program could have a significant impact on citizens on the lowest rung of the economic ladder in Pakistan. As envisioned, the equipment would be able to move from around the country and thus would impact families in all regions of the country. As stated earlier, this equipment would not be exclusive to mangoes but could be utilized for other products including –white apricots (potentially for export) and other fruits and vegetables.

This equipment would allow for small farmers that produce mangoes that do not have access to fresh markets to "preserve" their product through drying. Therefore, they would have a product that can be converted into cash rather than spoiling from lack of access to the market.

The VFF model would also advance the entire demand chain from exporter to grower and would allow for several intermediate value added steps and procedures to be performed by individuals along the demand chain. Many of these tasks can be performed by women while the men focus on more physically demanding work.

8.5 Process equipment requirements

The options for process equipment will depend on which production model is chosen by the project. Production of dried mangoes can be as simple as setting them in the sun (traditional method) to advanced multi-zone drying tunnels or chambers. Each style of drying lends itself well to a specific niche in the dried mango market. For example, a traditional dried product can be sold either at the high-end (certified organic and/or natural) or into the ingredient channel for use in energy bars, cereals or pet snacks. High end osmosis drying with sugar added is a more commercial operation and can be utilized to produce product for the mid-range (bulk of the market at the top of the bell curve figure 15 above).
The formula for osmosis style (sugar added) dried mangoes is simple and as follows:

Dried mango ingredients:
* Ten kilos fresh firm ripe mangoes
* One and a half kilo sugar
* Five grams of sodium metabisulfite

Procedure on how to make dried mango:

1. Weigh and wash fruits thoroughly.
2. Peel. Slice longitudinally. Separate choice cuts from chips.
3. Weigh mangoes slices.
4. Add 30 percent sugar. Allow to stand for four to six hours.
5. Drain. Add onepercent sodium metabisulfite to syrup.
6. Boil syrup. Add mango slices and boil for 3 minutes.
7. Let stand overnight. Drain. Collect syrup.
8. Wash mango slices with warm water. Drain.
9. Spread on trays and dry in solar drier for 16 hours.
10. Sweat for 12 hours. Sprinkle confectionaries sugar.
11. Pack in polyethylene/polypropylene bags.

(http://entrebankph.com/eleven-steps-to-make-dried-mango-osmosis-for-business/, 2011)

For sundried mangoes without sugar or metabisulfite the formula is simply – sunlight until the desired moisture and texture is achieved.

Figure 22 Dried mango process flow (Valentine, 2010)

· Most of the resources researched recommend pre-treatment of the food, such as blanching, (boiling/steaming).

· Wash fresh fruits and ripe vegetables thoroughly.

· Effective drying is accomplished with a combination of heat and air movement.

· Remove 80 percent to 90 percent of moisture from the food.

Typical drying times range from one to three days, again depending on sun, air movement, humidity, quantity, and type of food.

Once the drying process has started it should not be interrupted, do not allow to freeze.

Direct sunlight is not recommended.

Temperature ranges of 100 to 160 degrees F. (37.2 C to 71.2 C) will effectively kill bacteria and inactivate enzymes, although temperatures around 110 degrees F. (43.2 C) are recommended for solar dryers.

Too much heat especially early in the process will prevent complete drying.

Food should be cut into thin slices, less than 1/2" thick (1.25cm) and spread out on trays to allow free air movement.

Rotate trays 180 degrees daily for uniform drying. Move dryer food to bottom racks.

Safe tray materials include Stainless steel rack - wood slats - cheesecloth - Teflon - Teflon coated fiberglass - nylon - food grade plastics

Allow food to cool completely before storing.

(Whitfield, 2000)
The production flow of dried mangoes produced by Jim Valentine is as follows with further details found in his report *DRIED MANGO PRODUCTION* is found to the left.

A review of the flow-chart illustrates that the only equipment requirement, beyond transportation equipment, is in the drying step and packaging. Packaging can be reduced by shipping in bulk 20 kg. (44 lb.) boxes with poly lining. Many of the USA importers and retailers have packing operations where they pack to their standards, including foil and form and seal bags, and do mixed product or further value add operations. For example, the spiced mango sold by TJ's is imported in bulk, chili added in the USA and repacked for retail sale.

With the option to produce in bulk boxes we will not address retail packing in this report. This is also prudent considering that each retailer will have their own package requirements and few importers will work with a packer's brand – unless supported by significant marketing funds – which are not a logical move for a new to market producer like companies in Pakistan. From a marketing standpoint it will be prudent for Pakistan to work with either bulk product or the buyers' brand.

While the process is simple extensive research has been conducted in refining the dried mango process with particular attention to color and texture. Two reports in this area of particular interest are found in the appendix of this report –

IMPROVING THE OPERATION OF A COMMERCIAL MANGO DRYER by Donald G. Mercer PhD PEngDepartment of Food ScienceUniversity of Guelph, Guelph, Ontario, Canada and Robert Myhara PhD FIFST CSci, Norman Paterson School of International Affairs, Carleton University, Ottawa, Ontario, Canada(Appendix D)

DRYING KINETICS AND COLOUR CHANGE OF MANGO SLICES AS AFFECTED BY DRYING TEMPERATURE AND TIMEBY El-Amin Omda Mohamed Akoy, University of Zalingei, Department of Agricultural Engineering, Sudan, and Georg August Universit¨at Goettingen, Institute of Agricultural Engineering, Germany(Appendix F)

9.0 Specific equipment

There are a number of equipment options and each situation needs to be analyzed to identify the "right" piece of equipment for that application. All of these units can be produced in Pakistan either though license with global manufacturers or through reverse engineering. Visiting several organizations in Pakistan I was able to determine that local capability exists to develop the equipment to meet the needs of the various options. Care must be taken, however, to avoid 1) reinventing the wheel and 2) making it more complicated than it needs to be. Universities and technical institutions can tend to complicate issues which are rather straight forward.

Visiting the factory for Technology International in Faisalabad it is clear to see that they are competent to produce a wide range of mango drying machines. The critical points are uniform temperature and air circulation throughout the dryer. The more uniform the circulation is, the more uniform the product will be, and that will make it more acceptable to the market. With their experience in autoclaves, Technology International has the capability to produce the equipment which provides for sufficient air flow in the chamber.
Technology International had provided the drawings and specifications for a number of cabinet and tunnel dryers which can be produced at their facility and which would work at the various options. (See appendix G)There are others in Pakistan that have dried fruit experience and specifically dried mango experience. The Agricultural and Biological Engineering Institute, in cooperation with the Pakistan Horticulture Development and Export Company offer a Solar-cum-gas fired date dryer which would work equally as well for drying mangoes. (See appendix I)

Our research has also brought to several other companies and organizations that may be of value in working with in the development of a dryer strategy. S.I.S Engineering has done work in Africa on mango drying and therefore has specific mango drying experience in their corporate portfolio which the Karachi branch would be able to capitalize upon.

Karachi

S.I.S. Engineering Associates
Dehumidification
402, Mehdi Towers, 115-A, S.M.C.H.S., Shahrah-e-Faisal
Karachi
Pakistan
Tel: +92 21 4550331
+92 21 4550331
Fax: +92 21 4552407
E-mail: **mschapra@super.net.pk**
(be careful with their website if you search them on the web my virus protector found a Trojan and kept me off

9.1 Equipment Summary

There is no one-size-fits-all solution to the equipment utilized. We can go as complex as full automation (not recommended due to labor rates and project objectives) to rustic and rural.
The key is quality control and the production of the "appropriate product with the appropriate technology". In this report we have discussed several options for intervention and support. To support these options, we have outlined various equipment options in the appendix of this report. One thing we can be certain of is that it is not necessary to reinvent the wheel or the dryer in this case. While it will be important to have the Universities, PCSIR and research and development organizations involved it is not necessary for them to do research on what has already been proven and available through commercial channels, NGO's and other development organizations. The technology exists; it simply needs to be applied appropriately.

10.0 Necessary Training and standards

No matter which equipment is utilized it is critical that the appropriate training occur with respect to HACCP, GAP and quality control. Consistency of product is the most important thing, and luckily this is simply controlled by hiring more people, thus helping to achieve greater employment.

As an Appendix to this report we have included the following documents Sun Sweet Standards for processing dryers (Appendix B) and Appendix C Philippine process for handling dried fruit and Appendix D Philippine mango standards documents. These documents will help producers define the standards that other dried mango producers utilize for their operations and their quality standards.

2020DC or other technically oriented consulting companies with a market focus will be able to work with the Pakistani firms to adapt the standards to meet the local circumstances and the demands of the customers.

The nice thing about dried mangoes is that there is a market for all grades as different styles of dried mangoes appeal to different buyers – Organic buyers require natural product which is sundried or heat dried while Costco and bulk buyers work with osmosis sugar infused product.

The key is standardization so that everything from a single packer (collector) is uniform and offered to the "right" niche for that product. The standards should be quantified Appendix M which reflects the standards from Green Cell dried mangoes. A standard like this should be developed for each quality that the producers work with and this standard should be adhered to rigidly. While many different standards are acceptable variance from within a standard is not acceptable. A consultant team should be hired to help develop and train to the standards. This should be done with a combination of technical processing expertise and marketing expertise as the two should be considered together to ensure that what is market oriented is achievable and what is technical oriented is marketable.

11.0 Summary of findings

The chart below reflects the Pakistan dried mango situation versus the typical USAID supported product/project:

	Typical product development efforts	**Pakistan dried mangoes**
Supply / Demand situation	Surplus of supply thus trying to sell a product that is the "same" as others forcing you to compete on price only.	Global shortage of supply with major importers expressing a need for additional product.
Quality	Product is not capable of achieving global standards.	No hurdles have been identified from having the Pakistani dried mangoes meeting or exceeding global standards for quality
Price	Too high to be competitive due to many factors including freight and price/value relationships	Nothing indicates that Pakistan cannot be competitive on the price of the dried mangoes that they produce
Entrepreneurs available to capitalize upon the opportunities developed	Few entrepreneurs exist and those that do are not the target audience for development assistance due to their current economic position in the community.	Entrepreneurs exist with solid education, experience and resources capable of capitalizing upon the opportunities developed.
The target audience (the poor) ability to be involved with the value added aspects of production	The cost of adding value to most products is too high for the poor to be actively involved in processing and the profits of value add goes to the large players.	With the appropriate technology dried mangoes can be produced by people of all income and resource levels. Thus the impact on the poor is greater than in most value added products – including fresh mangoes which require considerable investment to achieve export quality and standards.

Women involvement	Often forced to meet project objectives	A natural extension of current activities and one where the skills of women are valued more than those of men (sorting).
ROI	Questionable due to issues discussed above	Unlimited due to issues discussed above.

With dried mangoes USAID has the potential to create a "new" industry, which:

a. does not compete with industries in the USA
b. complements the other objectives of USAID – helping women and the poor to a greater degree than other investments which do not allow for micro-production and processing opportunities
c. Will get Pakistani food processors exporting to the global market place (our friends in Japan are very interested in Pakistani dried mangoes as they are facing the same supply/demand issues that the USA buyers face.)
d. USAID supported products will end up at top USA retailers without displacing other origins.

In our opinion the USAID efforts in Pakistan on dried mangoes is in a unique position to achieve significant sustainable economic development in Pakistan.

12.0 Next steps and recommendations

The time for study is over. Sufficient information is available to justify Pakistani development of a dried mango industry. The commercial sector requires some assistance to minimize their risks and take the plunge into this new venture.

Interventions as outlined above include the following; many actions can run simultaneously in order to achieve exports in 2011:

1. business plan development and implementation
    a. partner selection
    b. equipment selection
    c. budget
    d. adoption of dried mango standards similar to those of the Philippines (Appendix ASFG)
    e. adoption of dryer certification program similar to that of Sun Sweet (Appendix SDF)

2. procurement of equipment
3. installation of equipment
4. Technical assistance on operation of equipment
5. Market development
    a. Development of product
    b. Development of package – bulk preferred
    c. Market linkages – building upon earlier work outlined in *US Dried Mango Market Analysis and FIRMS Approach* and *Dried mango market study results*

12.1 Specific recommendations:

2020DC is a firm believer in using the visible hand of development to develop a market leader and to let a cluster form behind them to duplicate their success. In this light we recommend that the project select one partner in each of the three options – processor, packer, VFF – and help them become the market leader. Then there will be a cluster of copy cats and carry along's to duplicate their efforts and develop an industry.

The project should choose to work with a major processor like Perfect Food Industries, http://www.perfectfood.com.pk/ Popular Foods, Nestle, Clover Pakistan Ltd, Noon Pakistan, Mitchell's Fruit Farms Ltd or other large food processing company to lead the commercial processing. In this case the primary support that the project needs to provide is in marketing assistance to provide the company with sufficient confidence in the demand for their product. They may also be required to provide some field extension or product sourcing efforts. This level of processor will probably not require technological assistance or financial assistance.

The project should choose one, or maybe two to help with economies of scale for sufficient product for export, fresh mango processors with whom they already have an existing relationship with to assist them in the entry into the dried mango industry. This assistance will be more extensive than that provided the major food processor as financial assistance may be required, however, the packing house should have a stake in the equipment. The building and other resources already exist so if they are to enter the business they should have an investment in the equipment.

The project should provide assistance in training on how to utilize the equipment and work with the Universities in recording the results for future reference and training. This group will also require assistance in marketing.

The third intervention is to work with the VFF effort. To do this it will be best if the project can learn from the efforts in Burkina Faso and cooperate with a group like Mountain Fruit or the Aga Khan Rural Support Program to synergize efforts. While this portion of the program will require the most time to develop it may be the most successful in reaching the poor. The costs may be less than the above two options as the drying equipment is not expensive and with proper entrepreneur support, which is abundant in Pakistan it can be a great global success – exceeding that of Burkino Faso and creating a great USAID success story.

Appendices

Appendix A – Further links and research options

Additional research:

Equipment
Solar Dryer Research
http://worldwidescience.org/wws/resultList/fullRecord:solar%2Btunnel%2Bdryer/#ResultList=0%7C0%7C_%7CRANK%7C0

Automatic mango peeler:

KINGSLINK INCORPORATED
P.O. Box 1221
La Jolla, CA 92038 U S A
Tel. +1.858.699.2651 +1.858.699.2651

Contact information

Tropical Whole Foods	http://www.fmfoods.co.uk/tw/who.htm
Mango Mountain	http://www.tve.org/ho/series5/source_to_sale_reports/report5.html

Pakistani Companies
Directory of Pakistan companies and credit references http://www.crmz.com/Directory/CountryPK.htm

Shezan Foods	http://www.shezan.biz
National Foods	http://nfoods.com/contents/products-home

Appendix B SunSweet Standards

Appendix C Philippine process for handling dried fruit

Appendix D Philippine mango standards documents

Appendix E *IMPROVING THE OPERATION OF A COMMERCIAL MANGO DRYER*

Appendix F Drying Kinetics and Colour Change of Mango Slices as Affected by Drying Temperature and Time

Appendix G Technology International

Appendix H Example of Equipment Suppliers

Excalibur Commercial 2 Zone Specification Sheet

"Front Profile/Closed"

"Front Profile/Open w/Racks"

"Rear Profile/Open"

	2 Zone International
Dimensions	70"H x 30"D x 30"W
• 148² Ft. Drying Capacity • 42 --100% Stainless Steel Drying Racks • Computerized Digital Readout with 999-hour Timer and 60-208◦ F Temperature Control with Automatic Cool Down& Shut Off. • Dual Zones w/Separate Temperature Controls • The Entire Cabinet, inside and out, *Constructed of High Quailty Stainless Steel* • Priced from $12,936.00 • 3 Year Warranty • ***NSF Approved*** ***Optional--Perforated Baking Pans***	Unit Takes 22 Standard Baking Pans 18" X 26" X 1" (Available as an Option)
Stainless Steel Racks	Includes- 42 Racks-- 100% Stainless Steel Trays
NSF Approved	**YES**
Drying Capacity Using Racks	136 ² Feet
Drying Capacity Using Optional Pans	71 ² Feet
Fan Blade Size	8 - 6.5" Aluminum
Motor Config./Speed	**8**- 1 Speed Motors
Cyclage	50Hz.
Amperage	23@208V - 20@240V
Voltage	*208/220-240V, 30Amp., 1Ph. w/Gnd.* ***(Requires 4 Wire 240V Connection)***

Wattage	4800 Watts
Breaker Suggested	30 Amp.Breaker
Temperature Range	80°F-200°F
Weight	300 Lb.
Wheels	4 Wheels (2 Front Locking)
Warranty	*3 Year* Warranty

The Excalibur Commercial 2 Zone Unit has a Unique Adjustable Sliding Dampener installed in both doors.
With proper use this dampener can be closed to retain moisture during the beginning of a drying process, Assisting in the maintaining of a "WET HEAT" environment which is optimal for the destruction of harmful bacteria.

Additional Information:

- The entire cabinet, inside and out, is *constructed of stainless steel*: *welded and finished* to strict NSF specifications to prevent food from getting caught between any seams.
- **Includes 42**-- 100% Stanless Steel Trays- Optional Perforated Standard 18" X 26" Baking Pans are available.
- Door, trays and tray supports, are removable for *easy* cleaning.
- Motors and fans are connected to a hinged back assembly, which can be opened, allowing *easy access when cleaning*.
- 2 Computerized Digital Readout, 99-hour Timer*, and 80°-200°F* Temperature Control with automatic shut off. This readout has adjustable: fan delay, alarm type and beeper cycle. User may also select the readout to display in Celsius or Fahrenheit.
- Avaiable in 60hz or 50hz
- 3 Year Limited Warranty. If the unit is modified in any way the warranty is void.

Assessories& Options- Available at Additional Cost

- ParaFlexx™ Non Stick drying sheets -$32 .00 per sheet
- Standard Perforated Pans- 18" X 26"

Shipping:

FREE SHIPPING- Until Jan 31, 2011*

This unit is shipped palletized and shrinked-wrapped via a trucking company.

If you place an order on our website - we will contact you to set up shipping arrangements.
ORDER NOW

To Receive a Custom Quote or

for more information please call us at 800-875-4254 800-875-4254 or
e-mail us at mail@excaliburdehydrator.com

* Free Shipping offer for Domestic orders only- international orders will receive a $500.00 credit towards shipping costs, all duties and taxes are the responsibility of the buyer
http://www.excaliburdehydrator.com/comercialun.htm

Appendix I – Pakistan Agriculture & Biological Engineering Institute, NACRC, Islamabad

SOLAR-CUM-GAS FIRED DATES DRYER

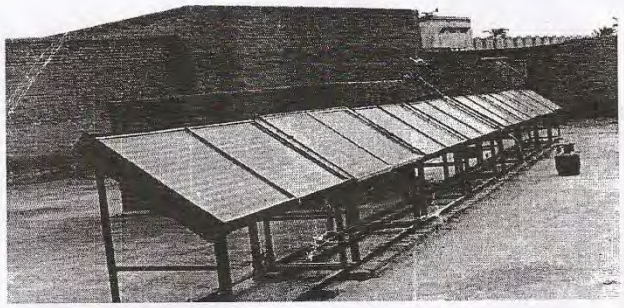

SALIENT FEATURES

- It dries about 500 kg of dates from 60% moisture content to 24% in 75 hrs.
- It protects dates against rain, insects, and other animals during the drying process.
- The dates dried with this dryer have long shelf life and are free from contamination and aflatoxins.
- Operating cost Rs. 15,600 per tone of dried dates.
- Value addition Rs. 52,500 per tone of dried dates
- Drying capacity is 4 tons/season

SALIENT FEATURES

SPECIFICATIONS OF A SINGLE MODULE

Length	2160 mm
Width	925 mm
Height	120 mm
Weight	82 kg
Gross areas of module	2 m^2
Effective area of one mod	1.81 m^2
Av. heat gen. capacity of one module (MJ/day)	18.6
No. of modules	8
Air flow rate	0.11 kg/s
Electricity consumption	24 kWh/ton
Gas consumed	1.0 kg/h
Av. temp. rise	24°C
Av. drying temp	60°C
Moisture take off	3.0 kg/h

AGRICULTURAL & BIOLOGICAL ENGINEERING INSTITUTE, NARC, ISLAMABAD

Appendix J - **Basis Dried mango unit!**

Made from two cardboard boxes, some clear plastic wrap, and a little tape. You can build a nearly free solar dehydrator. Set it on a stool or chair and face it's solar collector towards the sun, and you have a functional food preservation machine for little work and even less money.

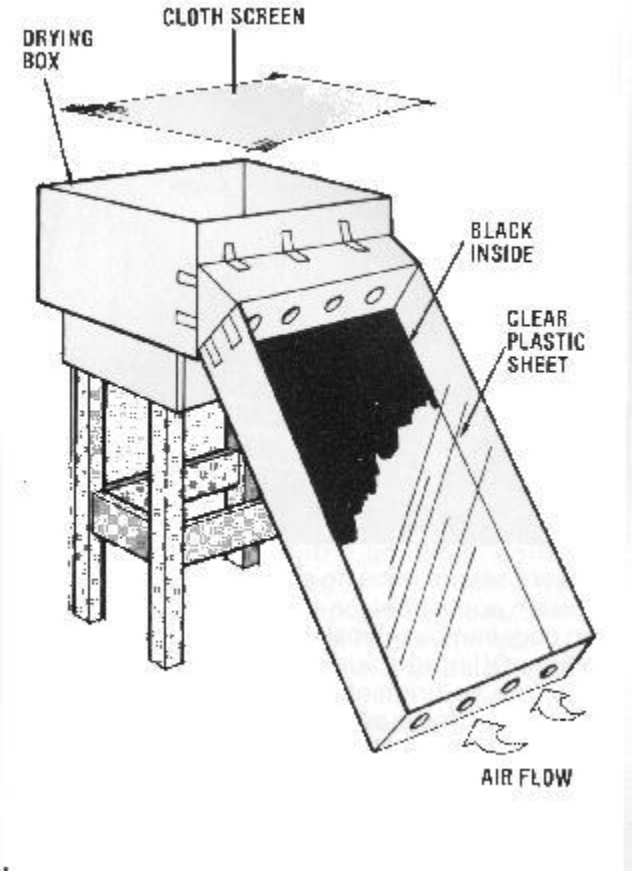

The above picture almost says it all. Using a long thin cardboard box for the collector and a taller, nearly square, cardboard box for the drying box. Boxes could be made to size by cutting and taping together small cardboard pieces. Line the bottom of the collector box with a black plastic garbage bag or paint the bottom with black, water based, poster paint, (lamp black or soot mixed with a little vegetable oil would work as well). ***If you use spray paint or other toxic paints, let the collector bake in the sun for a day or two before use.*** Cover the top of the collector with clear plastic wrap or window glass, etc. Tape it together as shown.

To increase the efficiency, you may want to cover the sides and bottom of both boxes with fiberglass or styrofoam insulation.

Drawing courtesy of: **Mother's Energy Efficiency Book** Copyright 1983 ISBN 0-938-43205-2

(http://www.jrwhipple.com/sr/soldehydrate.html, 2008)

Appendix K - A Guide for the Construction of the dryit semi-continuous tray drier

Appendix L Practical Action Dryer – drawings

Appendix M – Mango Specifications

Appendix N Pakistan Dried Mango – Mongos from the Japan market

Name: Dole Dried Mango

Package Weight:100g

Package Type: Resealable foil

Product Origin: Philippines

Ingredients: Mango, sugar, & sodium metabisulphite

Dist. By: Dole Food Company Inc.

Expiration:03/25/2012, best if consumed 2 days after opening, refrigerate

Name: j fruit – Dehydrate Mango

Package Weight:170g

Package Type: Resealable foil

Product Origin: Thailand

Ingredients: Mango

Dist. By:AIM Thai Intertrade CO.

Expiration: 09/02/2012

Name: 7D Dried Mangoes

Package Weight: 3.5oz

Package Type: Resealable foil

Product Origin: Philippines

Ingredients: Mangoes, sugar, sodium metabisulfite

Dist. By: Druity 7 CO, 7D Food International, Naspac Marketing PTE LTD, Aquarius Endeavors USA, J&L Trading Company, East Asia Traders SDN BHD, PJ Trade Korea Company

Expiration: None listed

Name: Dried Mango (unsweetened)

Package Weight:30 oz.
Package Type:clean and printed
Product Origin: Philippines
Ingredients: Mango
Dist. By: Profoods

Trader Joe's Dried Mango Label Information

Name: Freeze Dried Mango (unsweetened & unsulfured)
Package Weight:1.7oz
Package Type: Non-clear
Product Origin: Thailand
Ingredients: Mango
Dist. By: Trader Joe's
Expiration:06/26/2011

Name: Unsulfured &Sweetened Dried Mangoes
Package Weight:8oz
Package Type: Clear, re-sealable
Product Origin: Thailand
Ingredients: Sugar, Mango
Dist. By: Trader Joe's
Expiration:07/08/2011

Name: Just Mango Slices (unsulfured & unsweetened)
Package Weight: 6oz
Package Type: Clear, non-re-sealable
Product Origin: Mexico
Ingredients: Dried mangoes
Dist. By: Trader Joe's
Expiration:07/23/2011

Name: Soft & Juicy Mango
Package Weight: 6oz
Package Type: Clear, re-sealable
Product Origin: Thailand
Ingredients: Mango, sugar, glycerin, mango juice, sulfur dioxide
Dist. By: Trader Joe's
Expiration:05/26/2011

Name: Chile Spiced Mango (unsulfured & unsweetened)
Package Weight: 8oz
Package Type: Clear, re-sealable
Product Origin: Thailand
Ingredients: Mango, sugar, paprika, salt, citric acid, cayenne
Dist. By: Trader Joe's
Expiration:09/02/2011

Pakistan Dried Mango – Wal-Mart's Mango Label Information

Name: Mango
Package Weight: 8oz
Package Type: Clear re-sealable plastic box
Product Origin: Thailand
Ingredients: Mango, sugar, citric acid, sulfur dioxide, FD&C Yellow #6, #5.
Dist. By: Great Lakes International Trading Inc. Traverse City, MI 49685
Expiration:03/12/2012

Name: Dried Mangoes
Package Weight:7oz
Package Type: Clear resealable plastic box
Product Origin: Thailand
Ingredients: Mango, cane sugar, citric acid, calcium chloride, sulfur dioxide, yellow #6, yellow #5.
Dist. By: Waymouth Farms Inc.
New Hope, MN 55428
Expiration:06/27/11

Pakistan Dried Mango - QFC Mango Label Information

Name: Hawaii's Diamond Head Delights Mango Slices
Package Weight:8 oz.
Package Type:clear plastic, non-re-sealable bag
Product Origin: Thailand
Ingredients: **M**ango, low sugar
Dist. By: Nature's World LLC
Sumner, WA

Appendix O GlobalG.A.P. Overview

GLOBALG.A.P (formerly known as EUREPG.A.P) has established itself as a key reference for Good Agricultural Practices (G.A.P.) in the global market place, by translating consumer requirements into agricultural production in a rapidly growing list of countries – currently more than 100 on every continent.

GLOBALG.A.P is a pre-farm-gate standard, which means that the certificate covers the process of the certified product from farm inputs like feed or seedlings and all the farming activities until the product leaves the farm. GLOBALG.A.P is a business-to-business label and is therefore not directly visible to consumers.

GLOBALG.A.P consists of a set of normative documents. These documents cover the GLOBALG.A.P General Regulations, the GLOBALG.A.P Control Points and Compliance Criteria and the GLOBALG.A.P Checklist.

Membership - The partnership is open to any organization agreeing to the Terms of Reference. We commit to responding to consumer concerns on food safety, animal welfare, environmental protection and worker welfare by developing and adopting Farm Assurance Schemes that promote minimizing chemical inputs while maximizing commercial outputs. (this could be attractive to buyers – not organic but much healthier). The commit to communicating openly with consumers, producers, exporters, importers, and key stakeholders.

http://www.globalgap.org/cms/front_content.php?idcat=9

You can join by filling out the above, more importantly; you can go on and view membership organizations. Fees are high to join are premium supplier levels. By joining, it seems like you get to vote on standards, rules, and independent verification techniques and compliance.

Integrated Farm Assurance (IFA) is a single integrated standard with modular applications for different product groups, ranging from plant and livestock production to plant propagation materials and compound feed manufacturing

Mango Product number 68 in the Integrated Product List.

Global Gap is a business to business indicator and does not show up in final marketing to the consumer. (So marketing tool will only be useful to entice processors to include these crops in their products) The mark guarantees Best Practice along the whole production chain.

Any producer of agri products can be apply to become a member

Bibliography

(2008). *http://www.fairtrade-dryfruits.com.* Gilgit, Pakistan: http://www.fairtrade-dryfruits.com/products.htm.

www.panjiva.com. (2011, April 1). Retrieved April 1, 2011, from Panjiva: http://panjiva.com/trends/dates

Center Ecologique Albert Schwertzer. (2009). *Dried fruits and vegetables.* (http://www.ceas.ch/en/node/145, Ed.) Cote Neuchatel, Suisse: infoCces.ch.

http://entrebankph.com/eleven-steps-to-make-dried-mango-osmosis-for-business/. (2011). *Eleven Steps to Make Dried Mango (Osmosis) for Business.* Entrebankph.

http://www.jrwhipple.com/sr/soldehydrate.html. (2008). Solar hydration.

Jones, B. A. (n.d.). *Dry It - Semi-continuous Tray Dryer.* http://practicalaction.org/home?__utma=1.2088792366.1301385206.1301385206.1301544370.2&__utmb=1.20.10.1301544370&__utmc=1&__utmx=-&__utmz=1.1301385206.1.1.utmcsr=(direct)|utmccn=(direct)|utmcmd=(none)&__utmv=-&__utmk=92630301.

Krigbaum, J. (2010). *Pakistan Dried Mango sample feedback.* Pakistan : 2020DC / Chemonics / USAID.

Krigbaum, J. (2010). *US Dried Mango Market Analysis and FIRMS Approach.* USAID, Pakistan FIRMS. Pakistan: Chemonics / USAID.

Postharvest Technology Research Institute (PHTRI) Chiang Mai University. (January 2009). *Thai Mango's Value Chain Analysis and Supply Chain Management System to EU Markets.* Chiang Mai Thailand: European Commission's Asian Investment Program.

South African Mango Growers Association. (2008). *Mango Processing.* Tzaneen: South African Mango Growers Association.

Valentine, E. J. (2010). *Dried Mango Production.* USAID. Pakistan: Chemonics.

Dryer Certification Manual

This manual is provided to you because you have submitted an application indicating interest in dehydrating fruit that will be marketed under the Sunsweet brand. The information in this manual, once implemented, will become a path to the highest quality end product that Sunsweet will be able to claim as unique to their products. In this highly competitive global environment, raising the quality standard is one way to maintain a competitive advantage over the generic competition. This manual contains several sections, each designed to provide background information explaining why these standards are important. Each section also contains pertinent information regarding minimum acceptable standards as well as additional treatments that further enhance product quality. As a dehydrator operator, you will be charged with maintaining the minimum requirement in each area in order to keep a current certification to dry Sunsweet products. If you fail a Sunsweet audit inspection, you will have a short window of opportunity to correct the noted deficiencies in order to keep your certification. Failure to correct those deficiencies will cause the rejection of fruit dried at your facility, as well as loss of certification for that calendar year. You will find that the requirements contained in the manual are straightforward and all lead to higher quality products, greater food safety, less potential contamination, a traceable path to the source, and greater consumer confidence.

Please take the time to thoroughly read and understand the contents of this manual. Once you have an understanding of the standards, please move with the utmost speed to adopt the recommended minimums in each area. Audit inspections of drying facilities will commence with the beginning of the 2004 harvest and you should be prepared for the Sunsweet audit team. You should keep this manual as part of your permanent resource material so that you can refer to it when necessary and review it prior to the start of each harvest. Please note this manual does not supercede existing federal or state regulations. Sunsweet's Field staff and Quality Assurance personnel are available to answer your questions regarding the certification standards. Please call your Field Representative if you have questions about this program.

We would like to acknowledge the information provided by the DFA of California and Prune Marketing Committee in the creation of this manual.

Table of Contents

Table of Contents.....2

Good Manufacturing Practices.....3

Incoming Fruit Quality.....6

Fruit Containers.....7

Water Quality.....8

Drying Trays.....9

Tunnel Temperatures.....10

Moisture Levels.....11

Fruit Traceability.....12

Equipment Cleaning.....13

Trash Containment and Disposal.....15

Water Disposal.....17

Insect Control.....19

Rodent Control.....20

Fruit Storage.....22

Contaminated Fruit.....24

Restrooms.....25

Appendix A.....26

Appendix B.....29

Good Manufacturing Practices

Good Manufacturing Practice regulations (GMPs) are used by food manufacturers as they produce and test products that people consume. In the United States, the U.S. Food and Drug Administration (FDA) has issued these regulations as the *minimum requirements* to which manufacturers must adhere in order to ensure a modicum of food safety and manufacturing responsibility. In accordance with the Code of Federal Regulations, Title 21, Volume 2, Chapter 1, Part 110, Section 19a, *Exclusions*, as revised April 1, 1999, dehydrating facilities are NOT exempt from these regulations as the processes performed include cleaning, drying, and storing of processed commodities. As the products are further processed prior to distribution to the general public, Sunsweet suggests incorporating a modified current Good Manufacturing Practice (cGMP) policy into Dehydrator Standard Operating Procedures for the 2004 crop year. This modified program should include, at *minimum*, proper health, sanitation, personal property, and personal hygiene policies as defined below. A more comprehensive program which includes the additional recommendations is encouraged and may be implemented at the Dryer Manager's discretion.

Minimum standards

Health – 1) Any person who, by medical examination or supervisory observation, is shown to have, or appears to have an illness; open lesion including boils, sores, or infected wounds; or any other abnormal source of microbial contamination by which there is a reasonable possibility of food, food-contact surfaces, or food-storage materials becoming contaminated, shall be excluded from any operations which may be expected to result in such contamination until the condition is corrected. Personnel shall be instructed to report such health conditions to their supervisors. 2) *Gloves* are required whenever the employee has a non-infectious cut or wound. All cuts/wounds must be properly covered before putting on gloves or other designated protective gear. Remember, whatever can contaminate a human hand can also contaminate a disposable glove. Therefore, whenever hands should be washed, a new pair of disposable gloves should be worn. Never reuse or wash disposable gloves.

Personal Hygiene – 1) *Caps or bandannas* should be worn on the head at all times. 2) Facial hair is to be neatly trimmed and not exceptionally bushy. 3) Personal habits such as routine bathing and keeping fingernails short and clean are to be strictly maintained. 4) Always wash hands after each visit to the lunchroom or restroom; after touching human body parts; after coughing or sneezing, using a handkerchief or tissue, using tobacco, eating, or drinking; and after engaging in any activities that may contaminate hands (fixing machinery, handling chemicals, picking up dropped items, etc.). Hands must be washed

with warm water and soap. 5) *Eating, drinking, smoking, gum chewing, spitting, chewing of tooth-picks or tobacco, etc.,* in all processing, dehydrating, maintenance, and fruit storage areas is absolutely prohibited. 6) All employees will be required to wear clean, appropriate clothing for their work areas. 7) *Shoes* that provide non-slip footing on wet surfaces are recommended in the dipper area. Sandals, open-toed shoes, platform shoes, high-heels and shoes worn out to such an extent that they expose the sock or foot are prohibited in all areas.

Jewelry and Personal Property – 1) The wearing of rings (including channel or prong settings, stones, etc.), earrings (including clip-on or pierced), ornaments, or other type of jewelry is strictly prohibited in all areas. Exceptions will be made for rings that have a smooth and rounded surface that will not catch in machinery or equipment. 2) No clothing, jewelry, personal property (e.g., pouches), or personal protective gear shall be kept or stored in any area where any food product is handled except in designated areas specifically set aside for such storage.

GMP Sanitation Requirements - All employees are responsible for avoiding any possible product contamination and ensuring that all fruit processed represents the maximum quality attainable by following these practices:

1. Keep work areas clean and free of non-essential materials (rags, empty containers, string, tape, wood, cardboard, etc.)
2. Maintain a **glass-free** policy throughout the dipper, drying, and fruit storage areas.
3. Do not use trays, field bins, or portable bins for storing other items.
4. All lubricants in use should be properly labeled, handled and stored in a secure location when not in use.
5. Do not store any food or beverages, loose parts, tools, nuts, bolts, etc., on any machinery or in work stations.
6. Waste receptacles should be properly marked, emptied, and cleaned routinely.
7. Keep hoses coiled and all equipment and utensils properly stored when not in use.
8. High-traffic unpaved areas must be maintained to reduce the possibility of dust contamination.

Enforcement - All managers, supervisors, or leaders are responsible for assuring compliance by all personnel with all requirements of this policy. Responsibility for administering this policy shall be clearly assigned to competent supervisory personnel.

Additional Recommendations

Head Covering – All employees who work in processing, maintenance or other designated areas should wear an *OSHA approved "bump cap"*. A clean bump cap must be on upon entrance to areas where bump caps are required and may be removed ONLY after exiting the "bump cap" area. Bump caps must not be altered, painted, labeled, or modified in any way unless authorized.

Incoming Fruit Quality

The quality of incoming fresh fruit prior to dehydration can vary a great deal from grower to grower and day to day. Poor quality fresh fruit will NOT make good quality dried fruit. Fruit that is breaking down in the bins, has skin that slips off when squeezed, has a fermented odor, has abnormally low brix level, has skin breaks with mold present, or has live insect infestation is not conducive to a high quality consumer product. Deliveries with high levels of inferior fresh fruit should be rejected by the Dryer or at a minimum kept segregated for delivery as a manufacturing grade product. The flesh pressure and brix (sugar) level of the fresh fruit are attributes that contribute the most to final fruit quality.

Many growers begin their harvest each year by the calendar, not by the condition of the fruit. Every effort should be made by the Dryer personnel to schedule grower deliveries by the stage of fruit maturity of each grower. The grower will make more net income, his dry away will be lower, the undersize percentage will be reduced and the final product will be greatly improved. Harvest should begin in the orchard where the crop is the lightest which will then allow the heaviest cropped areas to mature further.

Minimum standards

- Any deliveries that are above six pounds pressure or below 16% brix should be discouraged and the grower instructed to delay harvest until proper maturity is reached.
- Fruit that arrives at the dehydrator with skins that slip, live insect infestation, or high percentage of live mold (excluding brown rot) should be IMMEDIATELY rejected by the Dryer operator.
- Dryer operators should contact the grower to inform them of any adverse fruit quality noted in deliveries as soon as possible.
- Once delivered to the dehydrator location, fruit should be dumped for drying no later than 24 hours after receipt of that fruit, preferably much sooner.

*-reading should be a composite sample of 10 pieces of fruit randomly selected.

Fruit Containers

Containers used to transport the fresh fruit to the dehydrator location (harvest bins, field bins) should be well maintained and have all broken or missing components repaired or replaced prior to use. These containers should always be cleaned each year prior to harvest. They should never be used to store **oils**, **greases, fertilizers, herbicides, pesticides** or any other compounds that you would not want to eat. Remember that the harvested fresh fruit comes in direct contact with the wood or plastic interior of the container and the fruit will pick up any contaminants from these containers.

Dried fruit containers are supplied to Dryers by the processor and therefore should be repaired and ready for use when they arrive. Even so, dryer operators and their personnel should make a habit of looking in those bins for foreign material prior to filling those bins with dried fruit. Those containers are stored at a variety of locations and are sometimes accessible to the public who may use them as a garbage container. They also may have some old crop fruit stuck in the bottom or corners of the bin that can contaminate the new crop fruit if not cleaned out prior to filling. Sunsweet containers, for both fresh and dried fruit, are for use only with Sunsweet Growers contracted fruit. Any misuse may result in the loss of the privilege of use.

Minimum standards

- Containers used to transport fresh fruit from the field MUST be thoroughly cleaned and repaired prior to use with new crop fruit.
- EACH dried fruit bin should be inspected for foreign material before being filled with new crop dried fruit. If that bin has any non-fruit material in it, it should be thoroughly cleaned before filling or exchanged for a clean container.

Additional recommendations

- Field containers will accumulate fruit syrup, dirt, weed seeds, leaves and other debris after several uses. It is recommended that after 4 uses, each bin is thoroughly sprayed out with water to keep from transferring box rot bacteria or other contaminants to the next bin load of fruit. Sprayers installed on bin dumpers that apply a rinsing spray to each bin as it is dumped are adequate for this purpose. Additional washing may be necessary more often later in the season.
- Badly damaged wooden bins should not be re-used until they are repaired. Contamination of the fruit and fruit damage is possible by wood splinters or metal parts of the broken bin such as post caps, screws, nails or rivets.

Water Quality

Water used in the washing of fresh fruit, machinery cleanup and bin or tray washing must be of good drinking quality and absent of unhealthy levels of toxins or heavy metals. Dipper tank water that is used over and over, without additions or replacement may impart foul odors and/or tastes on fruit as it is washed. The longer wash water is used without replacement, the higher the level of organic waste (prune skins, sugars, amino acids and dirt particles) becomes. Without proper water treatment and aeration, those organic wastes begin to decay and cause unpleasant odors. Most dehydrators are served by well water which in itself can be a cause of contamination, depending on the well.

Minimum standards

- Dipper tank water should be completely exchanged every four hours of run time, after processing 150 field bins, or at the end of the shift, whichever is latest.
- During the run, additional water should be added constantly to the tank at the rate of approximately 2 gallons per minute. This allows the non-stop dilution of the organic build-up in the dipper tank.
- Each Dryer MUST have their well or water supply system tested annually and possess a certificate showing that water to be absent of coliform bacteria. A copy of that certificate must be on file with Sunsweet before the audit will be scheduled. The test should be done by a laboratory facility that is certified to perform those tests. Those laboratories can also tell you how to treat your well so that your water supply will pass the necessary test.

Additional recommendations

- Once the water supply has received a clean certificate, make sure the well pump shaft packing is not leaking and the well casing seal is properly sealed to prevent re-contamination of the water supply. Water leaks at the well from pipe fittings, shaft packing and other sources are the most common method of re-contamination of domestic well water.
- Fresh fruit should not be left submerged in dipper tanks longer than is necessary to adequately rinse the fruit.

Drying Trays

Trays used in the drying of fresh plums receive heavy use during harvest and are constantly being wetted, filled, heated, flipped over and refilled. Each use deposits some amount of material on the trays that does not come off when the fruit load is removed. As this material builds up it can become a source of contamination for the next load of fruit placed on the tray and is also a favorite food source for insects and rodents. Because this material is naturally high in sugar, small amounts of moisture can cause the rapid growth of mold on trays. Good manufacturing practices dictate that trays be clean **before** placing fresh fruit on them to prevent contamination.

Minimum standards

- Trays must be free of loose foreign material and mold prior to use.
- Drying trays should be washed THOROUGHLY prior to the beginning of harvest. If trays have not been washed since the conclusion of last harvest, they will likely require two or more trips through the wash cycle to make them suitably clean.
- Trays should be washed with drinking quality water, applied under very high pressure (250-350 psi). The nozzles should be fan shaped and apply the thinnest stream of water possible at those pressures with the nozzles tilted to a 45 degree angle toward the moving tray.
    - Pre-soaking trays prior to the pressure sprayers can help loosen foreign material, but may also shorten the life of the trays.
    - Using hot water in the tray washing process can also help improve the cleaning.

Additional recommendations

- Washing trays after harvest and again before harvest has proven to reduce winter rodent and insect populations around dehydrators. It also reduces the amount of mold present in the spring that must be removed prior to use for fresh fruit.
- Scrubbing brushes, coupled with high pressure sprayers have been proven effective in adequately cleaning trays with fewer trips through the wash cycle and using substantially less water in the process.

Tunnel Temperatures

The maturity level of the fresh plums and the temperature at which they are dehydrated are the overriding factors in the final taste and flavor profile of the dried product. Early in the drying season fresh fruit can be exposed to higher temperatures without damage than later when fruit is at full, or past full maturity. Early season tunnel temperatures of 183 -188 degrees are not uncommon in the dehydration of fresh plums. The maturity of the fruit is constantly changing throughout the season and adjustments must be made in order to reduce adverse effects on final flavor profile. Each day, after drying begins, the threat of carmelization (burned sugar flavor) increases. Reducing drying time does not stop the occurrence of carmelization, only temperature reductions can accomplish that. Generally, carmelization will show up on the top tray of the stack first, and then move downward on the stack unless temperature corrections are made. There is NO known cure to remove a caramelized flavor from dried plums once it occurs. That fruit is then only suited for manufacturing purposes and badly caramelized fruit must be blended in with better fruit in order to temper the flavor of the juice or concentrate. Caramelized fruit can NOT be sorted out by machine or by hand. Therefore, once fruit has become caramelized, it stays in the mixture with the potential to degrade the final product.

Minimum standards

- Maximum tunnel temperatures should never exceed 190 degrees Fahrenheit, even during the early stages of the harvest.
- The top trays of the stacks should be visually inspected on a daily basis for the occurrence of caramelization. Fruit that has become caramelized is easy to spot, it has a very dull, dark color compared the normal shiny, black or reddish appearance of properly dried fruit. One taste will confirm the presence of caramelization.
    - Once it is spotted, reduce tunnel temperatures IMMEDIATELY by two to four degrees and monitor the effect of the reduction.
    - Continue to monitor and lower temperature as necessary throughout the harvest to keep the incidence of carmelization to a bare minimum.
    - REMEMBER, fast or cheap drying is not a bargain if consumers do not like the taste of the final product.

(Hint- the easiest way to check for caramelization is to walk the length of the tunnel roof looking down at the top trays that were just removed from the tunnels. The color differential of the fruit is very apparent from above.)

Moisture Levels

In order to properly store dried fruit and ensure the long term quality of the stored product, the fruit must be adequately dried and cured before shipment to the processor. Individual pieces of dried fruit can have wide variations in moisture content which is the reason for turning fruit from one bin to another to aid the curing process and allow for equilibration of the entire bin. Sunsweet has a maximum inbound moisture content of 21% that is STRICTLY enforced although other packers may have different tolerances. Some dehydrators make no effort to either monitor or test dried fruit for proper moisture levels. Improperly cured fruit leads to mold, box rot, insect infestation and possible rejection by the processor. Fruit that is properly dried retains its value based on size and quality while fruit that is improperly dried continually loses value and can result in economic loss to the grower.

It should be noted that all Sunsweet receiving locations have final authority to accept or reject based on moisture level. Member fruit that is found to be over moisture tolerance after receipt by Sunsweet may carry a handling fee of $100.00 per bin. The Sunsweet delivery deadline dictates that fruit is pulled at the proper moisture in order to not extend the curing process and risk the delivery window. REMEMBER, properly dried fruit is the key to a successful dryer operation, reduced insects and rodents, greater fruit value and happier customers.

Minimum standards

- All dried plums in storage bins MUST be turned AT LEAST ONCE to allow proper curing before shipping to the processor.
- Moisture level measurements to determine suitability for shipment should be done with an approved moisture meter (available through DFA) rather than the “feel” method so often used. Samples for moisture testing may also be taken to Sunsweet receiving stations, or any Sunsweet Dryer location for courtesy testing.
- Care should be taken in gathering a sample for testing. Fruit should be taken from the wet side of the dehy car with some fruit being picked from the top, middle and bottom of the stack of trays.
- Trays of fruit should NEVER be pulled from the tunnels with moistures greater than 24%. Fruit pulled below 24% will usually cure normally in storage bins with proper turning. Moisture levels consistently above 23% will require adjustments to either your tunnels or the fruit load on the drying trays.

Fruit Traceability

The identity and source of fruit deliveries needs to be maintained throughout the entire drying process and delivery to the processor. Consumer safety and future homeland security concerns make this tracking an important issue today that we have not had to deal with before. Some dehydrators spend very little time in the identification and segregation of growers' individual deliveries; this breakdown in identity can lead to mixing of growers fruit, cross contamination of lots, and potential economic impact on the growers involved if the fruit quality of the two is not equal. Every grower deserves to be paid accurately and fairly for the quality and quantity of fruit they deliver to the dryer, irrespective of whom else may be delivering to that dryer. In the event of contamination or consumer recall, it is CRITICAL that the source of that product can be traced back to the original grower. More and more of Sunsweet's customers each day are requesting traceability to the actual field of production.

Minimum standards

- All fruit on trays must identified prior to the drying process to ensure that it will be kept segregated from all other growers' lots through the entire process up to the handler. Dryers that have only one grower's fruit on site at any given time may not need to identify trays with unique designations.
- Stacks of trays MUST be marked with chalk using a distinguishing name, number or letter series that is unique to only that growers' lot. All Sunsweet growers have assigned codenames for this very purpose that could be used at all dryer locations.
- Dryer operators should NOT segregate growers' fruit only by staging in a particular area of the dryer or tunnels. Once fruit is dried, it is impossible to distinguish one lot from another without some sort of identity markings. Without proper identity segregation, any contamination traced back to a particular dryer, would indict all fruit handled there as potentially contaminated.

Additional recommendations

While marking trays with chalk works fairly well, there can be an issue of the chalk being accidentally washed off by an untimely rain shower or an errant water hose. A better method is to use code cards that can be stapled to each stack of trays for identification. These cards can be pre-printed or handwritten at the time of fruit handling and it takes only one card per car of trays. If cards are handwritten, be sure to use waterproof ink pens or markers. Black Sharpie markers work well for this purpose. To be 100% safe in maintaining fruit identity, Sunsweet Dryers uses both code cards and chalk marking in their operation.

Equipment Cleaning

The quality of finished product can be positively or negatively affected by the sanitation of the equipment used to convey, transport and process it. Dehydration equipment must be kept in a clean and sanitary condition. Dirty equipment may impart undesirable odors, tastes and/or bacteria that start, or speed up the degradation of finished products. Waste buildup on belts, conveyors, shaker beds, return elevators, etc. can lead to a lower quality finished product and consumer disappointment. Due to the naturally high sugar content in dried plums, certain bacteria, yeasts and molds can rapidly multiply with a minimum amount of moisture present. The sugar buildup on dehydration equipment must be frequently removed to maintain an acceptable sanitation level.

Minimum standards

- Equipment surfaces must be maintained to prevent a buildup of slime or waste materials. Dipping / traying equipment MUST be thoroughly cleaned at the end of each day's operation. Special attention should be paid to any surface that is expected to come into contact with fruit, either fresh or dried. This would include belts, conveyors, dip tanks and even floors. The following are acceptable methods of cleaning equipment:
    - High pressure, COLD or HOT water
    - Steam cleaning equipment

  Cleaning may be enhanced by the addition of a good quality food grade detergent.
- Dipper catwalks, railings, stairs and building supports and rafters should be free of any materials that may contaminate fruit during processing (oils, greases, cleaners, tools, and clothing).
- During cleanup, all belts, conveyors, etc. should be left running while applying the available cleaning method for several minutes to wash clean any accumulation on that equipment. Special care should be paid in completely cleaning all drums and rollers on belts and conveyors of the daily buildup of fruit paste/waste that accumulates on them.
- Documentation of cleanup procedures and training are required to be maintained by all facilities.
- All gearbox motors above any fresh or dried fruit must have a drip pan installed capable of holding all the fluid in the gearbox with a drain hose reaching the ground in an area that will not contaminate fruit.
    - Drip pans and hoses are required even if food grade gear lube is contained in the gearbox.

- In the event that it is not feasible to install drain hoses, drip pans must be designed in a manner that will allow easy access / removal for routine cleaning and the cleaning procedure must be documented.

Additional recommendations

- Prior to the start of harvest, any shed or building directly over dipping equipment or dried fruit storage should be rid of bats, birds, birds nest, spider webs and other foreign material.
- As floors and external surfaces of dipping equipment begin to build up with algae, dry granular chlorine can be used to reduce or rid those areas of algae.
- Liquid chlorine injectors also work well at levels of 0.2 – 0.5 PPM.
- If chlorine is used in processing, a suitable chlorine test kit must be on site along with written record of the test results to prove the proper use of chlorine. Extreme care must be used when handling chlorine products.
- All lubricants and greases used on equipment over the flow of fruit should be certified food grade.

Trash Containment and Disposal

Solid waste (leaves, sticks, dirt clods, tree limbs) is most effectively and economically separated and discarded in the orchard at the time of harvest. The disposal in the field actually makes everyone money, the grower enjoys a better dry away and pays less drying cost and the dehydrator operator has reduced handling and operational costs. With future penalties to growers with deliveries that are over tolerance in trash, it is critical to discard this solid waste as soon as possible in the harvesting operation. For any waste that is delivered to the dehydrator, it is also best to remove it as early in the drying operation as possible. Some dryer operators can dispose of this material on their own property by incorporating into the soil or burning once it is dry. These are both acceptable methods, provided the guidelines below are followed. Most dehydrators remove solid waste to county landfills or other approved disposal sites which is the preferred method.

Minimum standards

- Solid waste containment should be located on a concrete, or other hard, washable surface and be placed as far away as possible from fruit dipping and fruit storage areas.
- Solid waste containers should be dumped often, daily is preferred, but should not be held for longer than 48 hours without dumping. Any container not dumped within 48 hours, should be treated with an approved insecticide.
- Each time containers are removed for dumping, the containment area MUST be thoroughly washed down to eliminate sugar and juice buildup and subsequent infestations of flies, gnats and beetles.
- For dehydrators that are able to dispose of solid waste on their property, care must be exercised in choosing a disposal area that is as far as possible from the processing\drying facility, one-quarter mile minimum, one-half mile better.
    - Spreading the solid waste material as it is dumped will speed up the drying and substantially reduce odors, insect and rodent populations.
    - Growers who habitually deliver higher amounts of trash should be counseled and given every opportunity and incentive to improve their habits.

Additional recommendations

- At the conclusion of harvest, all solid waste containers should be dumped, thoroughly washed and treated with an approved insecticide prior to winter. The waste containment area should also receive a final thorough cleaning and insecticide treatment at the conclusion of harvest.

- Additional installations of fans, blowers, aspirators, etc. in the drying operation to treat the fruit before, or after drying, can greatly enhance the final quality of the product by applying an additional treatment prior to the fruit be put into storage bins and may help eliminate penalties to growers.

Water Disposal

In the normal drying and processing of dried plums a substantial amount of water is required in the various operations. In the drying function, a large amount of water is required for rinsing the fruit and separating any trash from the fruit as well as substantial water being used in equipment cleanup and sanitation. This process and wash water must be disposed of on a constant basis. Some dryers are connected to Municipal sewer systems which are very effective for water disposal. Other dryers send their process water to adjoining properties to be used for irrigation or simply allowed to evaporate. Process water applied to the landscape for evaporation will likely require permits from the State Water Quality Control Board and periodic inspections. This water is normally high in organic compounds and can become an odor and insect nuisance if not managed properly. The management of this processing water is a key ingredient in the overall sanitation of the drying operation and important in preventing complaints and abatement orders from the County and State.

Minimum standards

- Process water should never be transported by way of open ditch to the disposal area. An open ditch system has the potential for a wide variety of insect, sanitation, human health and safety issues that could become very serious. This water should be sent to disposal via enclosed piping, preferably underground.
- The water should be screened prior to disposal to remove as many solid particles as possible, which contribute the most to odors.
- The final disposal area should be as far as possible from the dryer. It should also not be located directly adjacent to any neighboring houses to prevent nuisance complaints.
    - These evaporation/percolation fields should NEVER be allowed to have standing water in them for more than 24 hours. Standing water will increase insects, especially mosquitoes, and will become anaerobic (without adequate oxygen), which dramatically increases odor.
    - Evaporation fields should be divided and the water application should be rotated every few days to get maximum use from the acreage, but not allow ponding of water to take place.

Additional recommendations

- There are some very effective odor-masking agents on the market today that can be applied pre-evaporation, or sprayed on or dripped into process water post-evaporation. These agents can be very effective in covering up the odor of process water disposal fields if applied correctly, but are usually quite costly.
- If this process water is used for irrigation, it is best to dilute it by 50% with fresh water in order to bring the ph closer to neutral.

Insect Control

The environment surrounding prune dehydrators is nearly the perfect situation for a variety of insects to survive, multiply and flourish. Warm temperatures, adequate moisture, ample waste material and the sweet smell of fruit sugar are a great combination for insect populations. Despite what some believe insects are not just a nuisance but can be a major source of damage to dried fruit. A large variety of insects are attracted to fresh and dried plums. Once they discover the stored fruit, if left uncontrolled, the populations can explode and create real damage to the final product. As mentioned in previous sections, the biggest allies to insect populations are mismanaged process water, improperly handled solid and household waste and incorrectly dried fruit (too wet). Fruit that is stored at a moisture level that is too high can begin to experience decay within several days and the slightest hint of decay will attract insect pests of dried fruit from far and wide. They will immediately begin feeding on the decaying fruit and will not be totally eliminated until that fruit is fumigated sometime in late October after damage has already occurred. House flies, yellow jackets, meat bees, fruit flies (Drosophila), mosquitoes, dried fruit beetles, Indian meal moths and carrion beetles are all fairly common pests that occur around the dehydrator environment.

Minimum standards

- Just prior to the beginning of harvest, all processing areas should receive an insecticide treatment to eliminate any pre-existing insect pests. This includes dipping areas, dried fruit storage areas, solid waste collection areas and any processing water storage or treatment area. Endure 35 WP is a good broad spectrum material that can be applied to the entire drying/processing area. Keep solid waste containers dumped frequently and keep container storage area clean and washed down. If solid waste containers will not be dumped within 48 hours, treat that container with an approved insecticide to keep insect populations in check.
- When working with insecticides, be sure to follow label directions.
- NEVER store insecticides on catwalks or ledges near fresh, or dried fruit and always leave those chemicals in their original containers.
- Manage processing water with the same enthusiasm as you do dipper crews and tunnels. Wash equipment frequently, keep dipper tank water fresh and do not allow pooling of water in any evaporation field area.
    - REMEMBER, solid waste and waste water are the two biggest culprits in the outbreak of unwanted insects.
- NEVER store high moisture (over 24%) fruit in storage bins. Leave it on trays for a few extra days to allow the moisture to drop before boxing that fruit.

Rodent Control

Rodents may be the most serious threat to sanitary final products, product contamination and the transmission of pathogenic organisms. Mice and rats have long been associated with unsanitary and undesirable conditions. They have no place near where food products, either raw or finished, are stored. Each year, Sunsweet receives deliveries that show positive signs of rodent activity in the bins of fruit. We need to do everything possible to keep them out of all drying/processing facilities and if failing that, keep them out of, and away from the fruit. Rodents are attracted to fruit as a source of nutrition and begin moving from fields and ditches into dehydrators when the food source at the dryer becomes more attractive than what is left in the field. Severe weather can also lead to an influx of rodents coming out of the fields to gain relief from the weather. Because some dried plums are sold as natural condition and actually get no more processing or treatment after the drying process, it is ABSOLUTELY necessary to keep rodents of all types away from dried fruit. The most important ingredient in eliminating rodent populations is good housekeeping. Stacks of pallets, bins, broken trays, weeds and surplus equipment all provide the kind of sanctuary necessary for rodents to survive and reproduce.

Minimum standards

- Bait stations should be numbered, anchored, and placed at fifty foot intervals around the exterior of warehouses and any fence lines within 100 feet of any fruit handling or storage areas.
- Bait stations should NEVER be used inside warehouses while product is being stored.
- Use only anti-coagulant type baits and change the bait if it becomes deteriorated due to age or weather.
    - Outdoor bait stations should use Generation place bait packs in dry weather and Talon Weather Blox bait during wet weather.
    - A popular style of bait station is Eaton's rat sized station with the plastic liner.
- Bait stations MUST be serviced on a year round schedule with bait stations being monitored monthly from November through July and monitored weekly from August through October.
- Enclosed warehouses should have glue boards around the inside walls every twenty feet as well as directly inside, both sides of each entrance.
- These glue traps should also be place in and around shop areas, lunch rooms and office buildings.
    - A good combination seems to be a mixture of <u>Catch Master glue boards for mice</u> and <u>Catch Master glue trays 48R</u> for rats.
- The record keeping part of this program is JUST as important as the actual monitoring and must include a *map* of the facility showing placement of bait stations **and** glue boards by number.

    - Inspection records MUST be logged by bait station number, the date serviced, indication of activity, and amount of bait used to refill.
    - Likewise, glue board activity must be monitored and logged. Glue traps should be dated when they are laid out and checked at least once per week. They should be replaced when they get enough debris stuck on the surface to reduce their ability to catch rodents.
- MSDS sheets MUST be maintained for all pesticides, glue boards and rodent bait.
- Eliminate the hiding, living and breeding areas of rodents, known as harborage areas, by removing trays, bins, pallets, stored equipment and any weeds and other debris that may be present. Rodents need places to hide where they feel safe and these piles of scrap materials are just what they like.
    - **A good housekeeping program will have more of a positive impact on rodent populations than anything else you may do**. As you accumulate broken trays and bins during harvest, store them as far away from fruit storage areas as possible. Once again, keep solid waste and household trash picked up and hauled off the premises on a frequent schedule.
- Dried fruit storage areas should have a fifty foot clear area on all sides with no harborage present.

Additional recommendations

Inspect all buildings and fruit storage warehouses for loose or missing siding, and gaps and spaces around doors and other entry points. Sealing these breaches is the best form of protection because it creates a physical barrier to rodent entry which is the only foolproof method known to man. Once the integrity of the walls and siding is corrected, sealing doors and entry ways allows you to close those points when you are not actively working in those buildings and keep out unwanted guests. It only takes a hole as big as the diameter of a wooden pencil to allow a house mouse to gain entry.

Fruit Storage

The storage of fruit after dehydration is a critical component in the final quality of that product. Fruit should not be stored for a prolonged period at dehydrator locations but should be sent to processors who have a more sanitary environment and the ability to fumigate fruit. Dried fruit is stored in a variety of ways throughout the industry including enclosed buildings, pole buildings and no buildings at all. Storage under any type of roof is generally better than no roof at all, to keep bird contamination to a minimum. Under roof storage also provides great piece of mind should a fall storm arrive prior to shipment of fruit to the processor. The prime consideration in dried fruit storage should ALWAYS be to eliminate, or minimize product contamination. Sanitary storage should be the goal of all dehydrators and processors. Many months of careful cultural work to grow a top quality product can all be quickly lost under poor storage conditions.

Minimum standards

- Fruit should be stored as far as possible from dusty orchards, busy roads or any other potential source of contamination.
- Storage buildings of any type, enclosed or pole sheds, MUST be thoroughly cleaned prior to the start of harvest.
    - All rafters and ledges under roof should be cleaned and made free of bird nests, spider webs and any accumulated dirt and dust.
- Storage buildings MUST have proper bait boxes outside and glue traps inside as defense against rodents.
- Any light fixtures under roof should have tube, or bulb guards to prevent glass contamination in fruit should a bulb break.
- Building walls and siding should be kept repaired and intact as a physical barrier against rodents.
- Walk-through and drive through doors of buildings should be repaired and usable so they may be closed during off hours and provide additional physical barriers to rodents, and primarily birds.
- Building roofs should also be kept functional to prevent moisture or dirt contamination of fruit.
- Outdoor storage should be maintained on concrete or other paved type surfaces.
    - Fruit should only be stored outdoors if indoor storage in not available and moved indoors or shipped to the processor as soon as possible.

Additional recommendations

Because few dehydrators can fumigate, any beetle or insect infestation in the stored fruit will continue to survive and propagate until the fruit is fumigated.

Pole sheds offer many advantage for storing and curing dried fruit. However, any fruit under pole sheds during inclement weather should be moved back from the edge towards the middle of the shed. Even the slightest wind will blow rain water one-third of the way across a tall pole shed.

Contaminated Fruit

In the course of drying and processing fruit, it is inevitable that some quantities of fruit will become damaged and/or contaminated. Fruit that becomes damaged (dropped to the ground, stepped on, and smashed) may end up being unsightly, but generally poses no real threat to consumers. Damaged fruit in large amounts can become costly to the grower in the form of hand sorting costs. Contamination however, is an entirely different situation. Fruit, fresh or dried, that falls to the ground does not necessarily become contaminated due to contacting the floor. Fruit on the ground in some cases comes into contact with non-food contaminants that can render the product unfit for consumption. There is a vast difference between picking up fruit off the ground and picking up fruit that is contaminated and should be discarded. Dryer operators and processors need to work hard at eliminating spillage, which in turn, would stop most all contamination of fruit. If spillage is kept at a minimum, any fruit discarded will be minimal and the corresponding economic impact will be minor.

Minimum standards

- Great care must be exercised in the training and supervision of employees who clean up spilled fruit to be certain they know what can be salvaged and what MUST be dumped. Emphasis in dehydrators should be placed on engineering and maintenance designed to eliminate ALL spillage.
    - Fruit that hits the floor and is immediately picked up should be returned to the lot unless that fruit has become contaminated.
    - Fruit spillage in Dryers that are operated by hydraulic systems should be discarded as there is no way to prevent contamination.
    - Damaged fruit, which is not contaminated should be picked up and placed in a central bin housing only damaged fruit. That fruit can be used by most processors for juice or manufacturing products. Placing it in a central bin also eliminates the danger of a grower being hit with hand sorting for damage not caused by them. If a dehydrator creates an inordinate amount of damaged fruit, or does a big volume of custom drying, they should create a central bin for each grower who delivers to them to hold that members damaged fruit.
- Fruit that somehow comes into contact with diesel, gasoline, hydraulic oil, motor oil, pesticides, herbicides, fungicides, rodent bait, or other non-food contaminants MUST be disposed of. That type of fruit should never be mixed with non-contaminated fruit or EVER delivered to the processor. A consumer complaint regarding dried plums that tested positive for any of these type contaminants could have DISASTROUS effects on the entire industry and its growers.

Restrooms

Common decency and State law require that employees working with food products have suitable restrooms with working toilets and hand washing facilities. Convenient, clean restrooms have proven to boost morale, help daily attendance and even improve production. The State of California has a complete list of restroom requirements for employees which can be accessed through the local County Health Department.

Minimum standards

- Employee restrooms should be clean and well lit.
- Wash water, soap, and disposable paper towels MUST be available for proper washing after restroom use.
- Suitable trash receptacles must also be provided for collection of the single use towels.
- Separate, lockable men's and women's restrooms must be available to service all employees, unless portable toilets designed for use by both sexes are made available.
- Restrooms should be located as to be convenient for employee access (on dryer property, not in orchard).
- Restrooms should be cleaned daily and care should be taken to keep foul odors to a minimum.
- Restroom design should be such that it will exclude flies and insects from entering.
- Any malfunction within restrooms MUST be corrected immediately.

Additional recommendations

If portable toilets are used at dehydrator locations, placement of those units in the shade will greatly improve their inside comfort and odor level. Most are made of poly plastic which becomes very hot inside when placed in direct sunlight. If portable toilets are used, hand washing facilities MUST still be provided.

Appendix A
GOOD MANUFACTURING PRACTICES (GMP)

Good Manufacturing Practice regulations (GMPs) are used by food manufacturers as they produce and test products that people consume. In the United States, the U.S. Food and Drug Administration (FDA) has issued these regulations as the minimum requirements to which manufacturers must adhere in order to ensure a modicum of food safety and manufacturing responsibility. In accordance with the Code of Federal Regulations, Title 21, Volume 2, Chapter 1, Part 110, Section 19a, Exclusions, as revised April 1, 1999, dehydrating facilities are NOT exempt from these regulations as the processes performed include cleaning, drying, and storing of processed commodities.

1. CLOTHING
    - I. All employees will be required to wear appropriate clean clothing in their work areas.

2. HEAD HAIR COVERING
    - I. All employees must wear proper head hair covering at all times. Proper head hair covering is defined as follows:
        - i. Caps: Baseball-styled hats that cover the entire head may be worn. Visor styled caps are not acceptable.
        - ii. Bandannas: Cloth bandannas, or cloth head coverings, may be worn over the head hair.
        - iii. Caps or bandannas must be worn on the head at all times while in the work and fruit storage areas and must cover all of the head hair area except for sideburn areas.
        - iv. The wearing of bobby pins, safety pins or other similar devices to secure caps or bandannas is strictly prohibited.

3. FACIAL HAIR
    - I. Mustaches shall be nearly trimmed and not be exceptionally bushy.

4. SHOES
    - I. Shoes that provide non-slip footing on wet surfaces are recommended in the dipper area. Sandals, open-toed shoes, platform shoes, high-heels and shoes worn out to such an extent that they expose the sock or foot are prohibited in all areas.

5. GLOVES
    - I. Gloves are provided by the Company and must be worn when working with processed fruit as follows:
        - i. Whenever the employee has a non-infectious cut or wound. The cut or wound must be properly covered before putting on gloves or other designated protective gear.

II. Whatever can contaminate a human hand can also contaminate a disposable glove. Therefore, whenever hands should be washed, a new pair of disposable gloves should be worn. Never reuse or wash disposable gloves.

6. JEWELRY AND PERSONAL PROPERTY

I. The wearing of rings (including channel or prong settings, stones, etc.), earrings (including clip-on or pierced), ornaments, or other type of jewelry are strictly prohibited in all manufacturing and maintenance areas. Exceptions will be made for rings that have a smooth and rounded surface that will not catch in machinery or equipment.

II. No clothing, jewelry, personal property (e.g., pouches), or personal protective gear shall be kept or stored in any area where any food product is processed or handled except in designated areas specifically set aside for such storage.

7. PERSONAL HYGIENE

I. Always wash hands:

i. Before and after food handling.

ii. Before and after each visit to the lunchroom or restroom.

iii. After touching human body parts.

iv. After coughing, sneezing, using a handkerchief or tissue, using tobacco, eating, or drinking.

v. After engaging in any activities that may contaminate hands (taking out the garbage, fixing machinery, handling chemicals, picking up dropped item, etc.)

vi. With warm water and soap. A brush can be helpful when cleaning hands.

II. Maintaining personal habits:

i. Bathing, washing, and restraining hair.

ii. Keeping fingernails short and clean.

iii. Nail polish or false nails are not allowed for employees who work with food.

iv. All employees are responsible for taking all precautions necessary to protect food and food-contact surfaces against any type of contamination.

III. All employees are responsible for reporting when sick to avoid spreading possible infections.

IV. Eating, drinking, smoking, gum chewing, spitting, chewing of tooth-picks or tobacco products, etc., in all processing, dehydrating, maintenance and fruit storage areas absolutely prohibited.

8. HEALTH

I. The Dryer Manager will determine necessary action on any reported health cases that may affect food, food packaging materials, and food contact surfaces.

II. Any person who, by medical examination or supervisory observation, is shown to have, or appears to have, an illness, open lesion, including boils, sores, or infected wounds, or any other abnormal source of microbial contamination by which there is a

reasonable possibility of food, food-contact surfaces, or food-packaging materials becoming contaminated, shall be excluded from any operations which may be expected to result in such contamination until the condition is corrected. Personnel shall be instructed to report such health conditions to their supervisors.

9. GMP SANITATION REQUIREMENTS

All employees are responsible for avoiding any possible product contamination and ensuring that all products produced represent the maximum quality attainable by following these practices:

I. Dehydrators:

i. Keep work areas and aisle ways clean and free of non-essential materials (rags, empty containers, string, tape, wood, cardboard, etc.).

ii. Maintain a **glass-free** policy throughout the dipper, drying, and fruit storage areas.

iii. Do not use trays, field bins or portable bins for storing other items.

iv. All lubricants in use should be properly labeled, handled and stored in a secure location when not in use.

v. Do not store any food or beverages, loose parts, tools, nuts, bolts, etc., on any machinery or in work stations.

vi. Waste receptacles should be properly marked, emptied, and cleaned routinely.

vii. Keep hoses coiled and all equipment and utensils properly stored when not in use.

viii. High-traffic unpaved areas must be maintained to reduce the possibility of dust contamination.

10. Enforcement

All managers, supervisors, or leaders are responsible for assuring compliance by all personnel with all requirements of this policy. Responsibility for administering this policy shall be clearly assigned to competent supervisory personnel.

I have received, read, and understand all the information contained within the Good Manufacturing Practices (GMP) guidelines and will comply with all items mentioned.

Employee's Name: _____

Employee's Signature: _____ Date: _____

Appendix B

Listed below you will find item descriptions along with some vendors names, addresses and phone who handle those items. This page is being provided for your use in sourcing some of the items listed in this manual. These vendors, listed below, are not the only ones who may handle these products, but are vendors who have handled and have sold to Sunsweet Dryers in the past. You are not required to purchase the items from only the vendors listed here.

Bait stations, bait, glue traps, insecticides

Cardinal Professional Products
10 North East St Suite 207
Woodland, Ca. 95776
1-800-548-2223

Cardinal Professional Products
8770 Highway 25
Hollister, Ca. 95204
1-800-548-2223

Food Grade Lubricants

Frontier Performance Lubricants
P.O. Box 1777
Lodi, Ca. 95241
1-800-807-4496

Applied Industrial Technologies
3076 Colusa Hwy
Yuba City, Ca. 95993
530-671-0700

Odor Masking Agents

Alco Products Inc.
13126 Saticoy St.
No. Hollywood, Ca.91605-3467
818-764-7700
530-347-1306 Local sales rep

Blue Stripe
19101 Kent Ave.
Lemoore, Ca. 93245
559-924-5025

Tough skin light bulbs and protective tube guards

Norcal Rexal Pacific
1003 Stabler Lane
P.O. Box 3235
Yuba City, Ca. 95992
530-671-1900

Orchard Supply Hardware
1262 Stabler Lane
Yuba City, Ca. 95993
530-751-1127

Food Grade Detergent

Zep Products
1-877-428-9937

Fruit pressure testers and refractometers

Bremers Ace Hardware
1012 Hazel St.
Gridley, Ca. 95948
530-846-3623

McMaster Carr
P.O. Box 54960
Los Angeles, Ca. 90054-0960
562-692-5911

Drop Box service (Solid waste containers)

Yuba Sutter Disposal
3001 N. Levee Rd.
Marysville, Ca. 95901
530-743-6933

Green Waste of Tehama County
530-527-4281

Water Testing Labratories

Monarch Labratories
563 E. Lindo Ave.
Chico, Ca. 95926
530-343-5818

Western Water Testing
610 C St.
Marysville, Ca. 95901
530-742-8378

Moisture Testing Machines

DFA of California
760 Stafford Way
Yuba City, Ca. 95991
530-673-6417

Granular Chlorine and Chlorine Test Kits

Wal Mart
Various locations

Any Pool Supply Store

Aspirators and Trash Removal Equipment

LMC Corp.
5300 Claus Rd.
Riverbank, Ca. 95367
1-800-562-72

Gene M. Jessee Inc.
1627 Nord Ave.
Chico, Ca. 95926
530-342-2909

FINAL DRAFT RECOMMENDED CODE OF PRACTICE FOR THE PROCESSING AND HANDLING OF DRIED TROPICAL FRUITS

1. SCOPE

This Code of Practice applies to dried tropical fruits such as mango, papaya, pineapple and jackfruit products that have been dried by natural or artificial means or a combination of both.

This code is concerned with the receipt of raw materials and ingredients, preparation and processing of other dried tropical fruit products as defined in this Code, in order to conform to the required standards stated in PNS/BFAD No.__:2007 Standards for Dried Mango Products andPNS/BFAD No. __:2007 Standards for Dried Tropical Fruits.

The mango (*Mangifera* spp.), papaya *(Carica* spp.), pineapple (*Ananas* spp.*)* and jackfruit (*Artocarpus* spp.), covered by this Code is dried to the extent that the greater part of the moisture has been removed, and in addition the fruit may be subjected to a safe and appropriate treatment in preparation and packing, to permit marketing in normal trade channels.

Dried tropical fruit products covered by this Code include, but are not limited to: dried mango, papaya, pineapple and jackfruit in slices, cubes, dices, chunks, chips, strips, bulbs and other styles according to the list of acceptable varieties established by the Authority of the consuming country.

Excluded in this Code are dried tropical fruit products dried exclusively by spray drying.

2. DEFINITION OF TERMS

For the purpose of this Code, the following definitions apply:

Container – any form of packaging material, which completely or partially encloses the food (including wrappers). A container may enclose the food as a single item or several units or types of prepackaged food when such is presented for sale to the consumer.

Current Good Manufacturing Practices (cGMP) – a quality assurance system aimed at ensuring that products are consistently manufactured, packed or repacked or held to a quality appropriate for the intended use. It is thus concerned with both manufacturing and quality control procedures.

Drying – the removal of water by natural means, i.e., by sun-drying.

Dehydration – the removal of moisture by artificial means and in some cases in combination with sun-drying sufficient to ensure quality and shelf life stability at ambient conditions.

Food – any substance, whether processed, semi-processed or raw, which is intended for human consumption, and includes drink, chewing gum and any substance which has been used in the manufacture, preparation or treatment of “food” but does not include cosmetics or tobacco or substances used only as drugs.

Food Additives – any substance the intended use of which results or may reasonably be expected to result, directly or indirectly, in its becoming a component or otherwise affecting the characteristics of any food (including any substance intended for use in producing, manufacturing, packing, processing, preparing, treating, packaging, transporting, or holding food; and including any source of radiation

intended for any such use), if such substance is not generally recognized, among experts qualified by scientific training and experience to evaluate its safety, as having been adequately shown through scientific procedures to be safe under the conditions of the intended use (R.A.3720, Food, Drug and Cosmetic Act).

Food Standard – a regulatory guideline that defines the identity of a given food product (i.e. its name and the ingredients used for its preparation) and specifies the minimum quality factors and, when necessary, the required fill of the container. It may also include specific labeling requirements other than or in addition to the labeling requirements generally applicable to all prepackaged foods.

Ingredient - any substance including food additive, used as a component in the manufacture or preparation of a food and present in the final product in its original or modified form.

Label – includes any tag, brand, mark, pictorial, or other descriptive script, written, printed, marked, embossed or impressed on, or attached to the container.

Labeling – any written, printed or graphic matter (1) upon any article or any of its container or wrappers and/or (2) accompanying the packaged food.

Lot – food produced during a period of time and under more or less the same manufacturing condition indicated by a specific code.

Moisture content - the percentage weight of water in relation to the dry weight of the product.

Packaging – the process of packing that is part of the production cycle applied to a bulk product to obtain the finished product. Any material, including painted material, employed in the packaging of a product including any outer packaging used for transportation of shipment. Packaging materials are referred to as primary or secondary according to whether or not they are intended to be in direct contact with the product.

Sweetening agent – one or more of the sugars, honey, high intensity sweeteners and artificial sweeteners.

Water Activity – the ratio of vapor pressure of water in the product to the water vapor pressure of pure water at the same temperature. It is also a measure of water available for the growth of microorganisms.

3. RAW MATERIALS, INGREDIENTS AND PACKAGING MATERIAL REQUIREMENTS

3.1 Raw materials and ingredients. Raw materials for processing shall not contain parasites, microorganisms, toxins, and decomposed or extraneous substances.

Tropical fruit (mango, papaya, pineapple, jackfruit). Fruit variety to be used for processing shall be prepared from sound, clean, mature fruit and is of a quality fit to be sold fresh for human consumption.

Sweetening agent. Sweetening agent or agents to be used shall conform to food standards required by the Bureau of Food and Drugs (BFAD), the Codex Alimentarius Commission and/or authority for these products.

Food additives. All additives shall conform to the food standards required by the BFAD and/or authority.

Water. Only clean, potable water (Annex A) shall be used for the preparation and for all the pretreatment and processing steps of beverage production. Non-potable water may be used only for operations not in direct contact with the food materials provided that this does not pose a hazard to health as determined and approved by the official agency having the jurisdiction over it.

3.2 **Packaging materials**. The packaging materials should be appropriate for the product to be packed and for the expected conditions of handling during distribution and storage. These should provide the products adequate protection from contamination and should be sufficiently durable to withstand mechanical, chemical and thermal stresses encountered during processing and normal distribution. All packaging materials must be clean and free from defects that may affect the product or package integrity. These shall be stored in a clean and sanitary manner.

4. HYGIENE

It is recommended that the product covered by the provisions of this code of practice be prepared and handled in accordance with the appropriate sections of the Recommended International Code of Practice – General Principles of Food Hygiene (CAC/RCP 1 – 1969, Rev 4 (2003)) and/or the BFAD A.O. No. 153 s. 2004 - Guidelines, Current Good Manufacturing Practices in Manufacturing, Packing, Repacking or Holding Food, covering the plant facilities and operations requirement including the construction and layout of processing plant, hygienic facilities, equipment, utensils and working surfaces.

5. PREPARATION AND PROCESSING

The preparation of dried tropical fruit products is described separately from the receipt of raw materials until the packing operations.

5.1 Preparation of Raw Materials

Tropical fruit (mango, papaya, pineapple, jackfruit)

Receipt of raw materials

Fruit shall only be accepted if it is sound and suitable for processing. Those that show signs of deterioration or damage specified in PNS/BAFPS 13:2004 for mango, PNS/BAFPS 33:2005 for papaya, PNS/BAFPS 09:2004 for pineapple shall not be used.

Inspection and sorting

The tropical fruit shall be inspected and sorted according to quality before processing (PNS/BAFPS 13:2004, PNS/BAFPS 33:2005 and PNS/BAFPS 09:2004). Sorting may be carried out on moving inspection belts or sorting tables.

Washing and/or sanitizing

Fruit is washed to remove dust, dirt, insect, mold spores, plant parts and filth that might contaminate or affect the color, aroma or flavor of the fruit. Washing with water must be accompanied with brushing, rubbing and forcing the water against the fruit and into crevices. Sanitizing agents may be used in the wash or rinse water.

Peeling and slicing or pureeing

The tropical fruit is peeled and sliced or pureed according to desired product form.

Addition of sugar

Sugar and other sweetening agents may be added to prepared tropical fruit. Depending on the method used, the fruit may be drained prior to drying.

Addition of other ingredients

Food additives and other components for the preparation of the intended dried products are added to the prepared tropical fruit.

Drying

Peeled and sliced or pureed tropical fruit, sweetened or unsweetened, is subjected to drying according to desired product form.

Other treatments

Other treatments may be done to the prepared tropical fruit pertaining to drying and adequate processing of the product.

Cooling

The dried tropical fruit products are cooled, sorted and graded.

5.2 Packing

Packing can be done either mechanically or manually. It is important to standardize filling for economic reasons. Gas packing or vacuum packing may be done.

5. 3 Closing or Sealing of Containers

Seams and other closures shall be sealed air-tight to meet the requirements of the processors.

The pouch seal area must be free of food material and wrinkles. Sealing temperature and pressure shall conform to the sealing equipment to be used.

5.4 Coding of Sealed Containers

Coding of sealed container shall be indelible with details of production date and time, batch code, product code, the product line in which product is packed, the manufacturing plant and other information necessary for product traceability. Where the container does not permit

the code to be embossed or inked, the label shall be legibly perforated or otherwise marked, and securely affixed to the product container.

5.5 Post-Process Container Handling

Pouches shall be handled singly rather than in bunches, and care must be exercised so as to prevent damage by roughened contact surfaces.

6. FOOD ADDITIVES

6.1 Food additives when used shall be in accordance with the regulations established by the Bureau of Food and Drugs (BFAD) (B.C. No.2006:016 . (Updated List of Food Additives), the Codex Alimentarius Commission and/or authority for these products.

The following food additives listed in, but not limited to, Table 1, may be used for the manufacture of dried tropical fruit products.

Table 1. Food Additives used for processing dried tropical fruit products

Food Additive	Maximum Level
Acidifying agent Any permissible acidifying agents as specified by BFAD	GMP
Antioxidants Ascorbic acid Sodium erythorbate	GMP
Humectants Any permissible humectants agents as specified by BFAD	GMP
Sulphites	3,000 mg/kg

6.2 **Others** - all others not included in the above list shall be allowed as carry-over, provided they are approved by the BFAD regulation and shall be in accordance to Section 5.2 of the “Principle Relating to the Carry-Over of Food Additives into Foods” (CAC/Vol. 1 1991).

7. LABELING

7.1 Each container shall be labeled and marked with the following information in accordance with BFAD's Labeling Regulation:

(a) The name of the product shall be "Dried Mango", "Dried Papaya", "Dried Pineapple" or "Dried Jackfruit". It shall have additional descriptor as to forms and styles or grading.

(b) Products using artificial sweetener/s shall have statement/s referring to its low and/or reduced caloric value and the possibility of hypersensitivity to some of its components.

(c) The complete list of ingredients and food additives used in the preparation of the product in descending order of proportion.

(d) The net quantity of content by weight in the metric system. Other systems of measurement required by importing countries shall appear in parenthesis after the metric system unit.

(e) The name and address of the manufacturer, packer and/or distributor of the food.

(f) Open date marking
The words "Best/"Consume Before" indicating end of period at which the product shall retain its optimum quality attributes at defined storage conditions.

(g) Lot or code number identifying product lot.

(h) The words "Product of the Philippines" or the country of origin if imported.

(i) Additional requirements
A pictorial representation of fruit(s) on the label should not mislead the consumer with respect to the fruit so illustrated.

7.2 Nutrition Labeling

Nutrition labeling shall conform to established regulations of BFAD.

8. QUALITY ASSURANCE

8.1 Inspection of Finished Products

All processed products shall be inspected before labelling and casing and defective products shall be withdrawn or rejected. The company must have an approved policy and procedures based on the BFAD A.O. No. 153 s. 2004 - Guidelines, Current Good Manufacturing Practices in Manufacturing, Packing, Repacking or Holding Food.

8.2 Record Keeping

Permanent and legible dated records of time, temperature code mark and other pertinent details shall be kept concerning each load. Such records are essential as a check on processing operations.

Written records of all container closure examinations shall specify the code lot, the date and time of container closure inspections, the measurements obtained and all the corrective actions taken.

Records shall be maintained identifying initial distribution of the finished product to facilitate, if necessary, the segregation of specific food lots that may have been contaminated or otherwise unfit for intended use.

All process deviations involving failure to satisfy the minimum requirements of the process shall be recorded detailing those deviations and the actions taken.

8.3 Hazard Analysis and Critical Control Points (HACCP)

HACCP plan must be developed for each product. Prior to the development of HACCP plan, establishments shall have developed, documented and implemented prerequisite programs based on BFAD's Current Good Manufacturing Practices (cGMP) and Hygiene Control.

Guidelines for the Application of the Hazard Analysis Critical Control Point (HACCP) System (CAC/GL 18-1993) present the recommended sequence and document formats for the application of the HACCP systems.

9. STORAGE AND TRANSPORT OF FINISHED PRODUCT

Storage and transport conditions of the finished product shall be such that the integrity of the product container, and the safety and quality of the product are not adversely affected.

Cases and cartons must be thoroughly dry. They must be of proper size so that the containers fit snugly and are not subject to damage from movement within the case. They must be strong enough to withstand normal transport.

Extreme temperature fluctuations during storage and transport of the product must be avoided to prevent product deterioration.

10. LABORATORY CONTROL PROCEDURES

Each food processing establishment shall have access to laboratory control of both the processes used and the finished products. All food ingredients and food products declared unfit for human consumption by the laboratory shall be rejected.

Representative samples for each lot or batch shall be taken to assess the safety and quality of the product.

Microbiological laboratory shall be separated from the processing area. No pathogens shall be handled within the premises of manufacturing plant.

Laboratory procedures for quality control of the processes and the product must follow recognized or standard methods for easy interpretation of results.

11. END PRODUCT SPECIFICATIONS

Appropriate methods shall be used for sampling analysis and determinations to meet the following specifications:

1. To the extent possible in good manufacturing practices, the products shall be free from any objectionable characteristics.

2. The product shall not contain any toxic substances originating from microorganisms and chemicals.
3. The product shall be free from chemical pollutants in amounts which may represent hazard to health.
4. The product shall comply with the requirements set forth by the Bureau of Food and Drugs and the Codex Alimentarius Commission on Pesticide Residues and Food Additives.

12. REFERENCES

A.O. No. 153 s. 2004. **Guidelines, Current Good Manufacturing Practice in Manufacturing, Packing, Repacking or Holding Food**. Bureau of Food and Drugs. Department of Health. Alabang, Muntinlupa City, Philippines.

Association of Analytical Chemists. **Official Methods of Analysis Manual**. 16th ed., 1995. AOAC International. 481 North Frederick Ave., Suite 500, Gaithersburg, MD 20877-2417. U.S.A.

B.C. No.016 s. 2006. **Updated List of Food Additives.** Bureau of Food and Drugs. Department of Health. Alabang, Muntinlupa City, Philippines.

FAO/WHO Codex Alimentarius Commission Manual. 1995. Codex Alimentarius Commission. Food and Agriculture Organization. Viale delle Terme di Caracalla, 00100 Rome, Italy.

Food, definition. ALINORM 04/27/41, para. 88 and Appendix VI. 2005. Codex Alimentarius Commission. Food and Agriculture Organization. Viale delle Terme di Caracalla, 00100 Rome, Italy.

Philippine National Standard No. 991:1993. **Agricultural and Other Food Products – Bottled Drinking Water Specifications**. Bureau of Product Standards. Department of Trade and Industry. Makati City, Philippines.

PNS/BAFPS 33:2005. **Fresh Fruits – Papaya-Grading and classification**. Bureau of Agriculture and Fisheries Product Standards. Department of Agriculture. Diliman, Quezon City, Philippines.

PNS/BAFPS 13:2004. **Fresh Fruits – Mango-Specifications**. Bureau of Agriculture and Fisheries Product Standards. Department of Agriculture. Diliman, Quezon City, Philippines.

PNS/BAFPS 09:2004. **Fresh Fruits – Pineapple-Specification**. Bureau of Agriculture and Fisheries Product Standards. Department of Agriculture. Diliman, Quezon City, Philippines.

R.A. 3720. **Food, Drugs and Cosmetic Act.** Bureau of Food and Drugs. Department of Health. Alabang, Muntinlupa City, Philippines.

Annex A

Standard Parameters and Values for Drinking Water

(Sec.2 **Philippine National Standards for Drinking Water**. Department of Health, Manila.)

Table A1. Standard values for bacteriological quality

Source and mode of supply	Bacteria	Standard value (no./100mL)
a. All drinking water supplies under all circumstances (Level I, II, III bottled water and emergency water supplies)	*E.coli* or thermotolerant (fecal) coliform bacteria	0
b. Treated water entering the distribution system	*E.coli* or thermotolerant (fecal) coliform bacteria	0
c. Treated water in the distribution system	*E.coli* or thermotolerant (fecal) coliform bacteria	0
	Total coliforms	Must not be detectable in any 100mL sample. In any case of large quantities where sufficient samples are examined, it must not be present in 95% of samples taken throughout any 12-month period.

Table A2. Standard values for physical and chemical quality: aesthetic quality

Constituent maximum or characteristics	Level (mgL)
Taste	Unobjectionable
Odor	Unobjectionable
Color	5 TCU
Turbidity	5 NTU
Aluminum	0.2
Chloride	250
Copper	1
Hardness	300 (as $CaCO_3$)
Hydrogen sulfide	0.05
Iron	1
Manganese	0.5
pH	6.5 – 8.5
Sodium	200
Sulfate	250
Total dissolved solids	500
Zinc	5

EVM/130807

FINAL DRAFT STANDARDS FOR DRIED MANGO PRODUCTS

1. SCOPE

This standard shall apply to dried mango of varieties conforming to the characteristics of *Mangifera* spp. treated or processed and packed in suitable containers.

2. DEFINITION OF TERMS

For the purpose of this standard, the following terms shall mean:

Container – any form of packaging material, which completely or partially encloses the food (including wrappers). A container may enclose the food as a single item or several units or types of prepackaged food when such is presented for sale to the consumer.

Current Good Manufacturing Practices (cGMP) – a quality assurance system aimed at ensuring that products are consistently manufactured, packed or repacked or held to a quality appropriate for the intended use. It is thus concerned with both manufacturing and quality control procedures.

Drying – the removal of water by natural means, i.e., by sun-drying.

Dehydration – the removal of moisture by artificial means and in some cases in combination with sun-drying sufficient to ensure quality and shelf life stability at ambient conditions.

Food – any substance, whether processed, semi-processed or raw, which is intended for human consumption, and includes drink, chewing gum and any substance which has been used in the manufacture,

preparation or treatment of “food” but does not include cosmetics or tobacco or substances used only as drugs.

Food Additives – any substance the intended use of which results or may reasonably be expected to result, directly or indirectly, in its becoming a component or otherwise affecting the characteristics of any food (including any substance intended for use in producing, manufacturing, packing, processing, preparing, treating, packaging, transporting, or holding food; and including any source of radiation intended for any such use), if such substance is not generally recognized, among experts qualified by scientific training and experience to evaluate its safety, as having been adequately shown through scientific procedures to be safe under the conditions of the intended use (R.A. 3720, Food, Drugs and Cosmetic Act).

Food Standard – a regulatory guideline that defines the identity of a given food product (i.e. its name and the ingredients used for its preparation) and specifies the minimum quality factors and, when necessary, the required fill of the container. It may also include specific labeling requirements other than or in addition to the labeling requirements generally applicable to all prepackaged foods.

Ingredient - any substance including food additive, used as a component in the manufacture or preparation of a food and present in the final product in its original or modified form.

Label – includes any tag, brand, mark, pictorial, or other descriptive script, written, printed, marked, embossed or impressed on, or attached to the container.

Labeling – any written, printed or graphic matter (1) upon any article or any of its container or wrappers and/or (2) accompanying the packaged food.

Lot – food produced during a period of time and under more or less the same manufacturing condition indicated by a specific code.

Moisture content - the percentage weight of water in relation to the dry weight of the product.

Packaging – the process of packing that is part of the production cycle applied to a bulk product to obtain the finished product. Any material, including painted material, employed in the packaging of a product including any outer packaging used for transportation of shipment. Packaging materials are referred to as primary or secondary according to whether or not they are intended to be in direct contact with the product.

Sweetening agent – includes one or more of the sugars, honey, high intensity sweeteners and artificial sweeteners.

Water Activity – the ratio of vapor pressure of water in the product to the water vapor pressure of pure water at the same temperature. It is also a measure of water available for the growth of microorganisms.

3. DESCRIPTION OF PRODUCTS

3.1 Product Definition

Dried mango is the product prepared from sound and mature ripe fruit of varieties of *Mangifera* spp. processed by drying either by the sun or other recognized methods of dehydration, with or without added sweetening agent and food additives.

3.2 Styles

The product may be presented in any one of the following dried forms:

(a) Halves

(b) Sliced

(c) Cubes/Diced

(d) Slabs - consisting of portions of sound, ripe mangoes of characteristic color, irregular in shape, size and thickness and excluding whole fruit.

(e) Chunks, chips and strips

(f) Other forms

3.3 Other Styles

Any other presentation of the product shall be permitted provided that the product:

(a) is sufficiently distinctive from other forms of presentation laid down in this standard such as mango leather, sheets or rolls

(b) meets all relevant requirements of this standard; and,

(c) is adequately described on the label to avoid confusing or misleading the consumer.

4. ESSENTIAL COMPOSITION AND QUALITY FACTORS

4.1 Raw materials

Mango

Fruit to be used shall be fresh, sound, clean and mature from any cultivated variety conforming to the characteristics of the fruits of *Mangifera* spp. of the *Mangiferae* family. It shall conform to specifications stated in PNS/BAFPS 13:2004 Fresh Fruit – Mango-Specifications.

4.2 Optional Ingredients

(a) **Sweetening agent** - one or more of the sugars, honey, high intensity sweeteners or artificial sweeteners.

(b) **Other ingredients** - all other ingredients to be used shall be of food grade quality and conform to all applicable food standards.

4.3 Quality Criteria

4.3.1 Maturity Characteristics

Mango shall show development characteristics of properly matured fruits, as indicated by proper color and texture for the varietal types defined in PNS/BAFPS 13:2004.

4.3.2 Moisture Content

The product shall have moisture content of not more than 15%.

4.3.3 Water Activity (a_W)

The product shall have a maximum water activity of 0.70 at 25 ˚C.

4.3.4 Sensory Properties

The product shall have the characteristic color, aroma, and flavor of mango. Dried mango halves, slices, cubes, slabs and leathers/rolls shall have a chewy texture. Mango flakes shall have a flaky, crispy texture. The dried products shall be free from any objectionable sensory characteristics.

4.3.5 Grading

The product shall be graded according to:

a) Premium – obtained from the thickest portion of the flesh ("cheek") on both sides cut parallel to the seed of the fruit

b) Regular – obtained from the remaining flesh after cutting the "cheeks" including the fibrous portions of the fruit

4.3.6 Types of Defects

(a) Foreign matter - The presence in the sample unit of any matter, which has not been derived from mango, does not pose a threat to human health and is readily recognized without magnification or is present at a level determined by magnification method or

any equivalent method that indicates non-compliance with good manufacturing practices and sanitation practices.

(b) Odor/flavor/color - A sample unit affected by objectionable odors or flavors indicative of decomposition and unacceptable color.

4.3.7 Classification of "Defectives"

A container that has any of the type of defects set in 4.3.6 shall be considered as "defective".

4.3.8 Lot Acceptance

A lot shall be considered as meeting the applicable quality requirements when the number of "defectives", as defined in sub-section 4.3.6, does not exceed the acceptance number of the appropriate sampling plan.

5. FOOD ADDITIVES

5.1 Food additives when used shall be in accordance with the regulations established by the Bureau of Food and Drugs (BFAD) (Bureau Circular No.2006-016, Updated List of Food Additives) and/or the Codex Alimentarius Commission.

The following food additives listed in, but not limited to, Table 1, may be used for the manufacture of dried mango products.

Table 1. Food Additives used for processing dried mango products

Food Additive	Maximum Level
Acidifying agent Any permissible acidifying agents as specified by BFAD	GMP
Antioxidants Ascorbic acid Sodium erythorbate	GMP
Humectants Any permissible humectants agents as specified by BFAD	GMP
Sulphites	3,000 mg/kg

5.2 **Others** - all others not included in the above list shall be allowed as carry-over, provided they are approved by the BFAD regulation and shall be in accordance to Section 5.2 of the "Principle Relating to the Carry-Over of Food Additives into Foods" (CAC/Vol. 1 1991).

6. HYGIENE

It is recommended that the product covered by the provisions of this standard be prepared and handled in accordance with the appropriate sections of the Recommended International Code of Practice – General Principles of Food Hygiene (CAC/RCP 1 – 1969, Rev. 4-2003) and/or the BFAD A.O. No. 153 s. 2004 - Guidelines, Current Good Manufacturing Practices in Manufacturing, Packing, Repacking or Holding Food and processed according to the Recommended Code of Practice for the Processing and Handling of Dried Tropical Fruits (PNS/BFAD No. ____:2007).

When tested by appropriate methods of sampling and examination, the product:

- shall be free from filth that may pose a hazard to health;
- shall be free from parasites which may represent a hazard to health;
- shall not contain any substance originating from microorganisms in amounts which may represent a hazard to health;
- shall be free from microorganisms capable of development under normal conditions of storage; and
- shall be free from container integrity defects which may compromise the hermetic seal.

7. LABELING

7.1 Each container shall be labeled and marked with the following information in accordance with BFAD's Labeling Regulation:

(a) The name of the product shall be “Dried Mango”. In addition, there shall appear on the label as part of the name or in close proximity to the name, any form of presentation listed in 3.2 or 3.3 and grading listed in 4.3.5.

(b) The complete list of ingredients and food additives used in the preparation of the product in descending order of proportion.

(c) Products using artificial sweetener/s shall have statement/s referring to its low and/or reduced caloric value and the possibility of hypersensitivity to some of its components.

(d) The net quantity of content by weight in the metric system. Other systems of measurement required by importing countries shall appear in parenthesis after the metric system unit.

(e) The name and address of the manufacturer, packer and/or distributor of the food.

(f) Open date marking

The words “Best/”Consume Before indicating end of period at which the product shall retain its optimum quality attributes at defined storage conditions.

(g) Lot or code number identifying product lot.

(h) The words “Product of the Philippines” or the country of origin if imported.

(i) Additional requirements

A pictorial representation of fruit(s) on the label should not mislead the consumer with respect to the fruit so illustrated.

7.2 Nutrition Labeling

Nutrition labeling shall conform to established regulations of BFAD.

8. METHODS OF ANALYSIS AND SAMPLING

8.1 Determination of Moisture Content (Vacuum Oven Method)

According to the AOAC Official Methods of Analysis, 16th ed., 1995. Method No. 934.06.

8.2 Determination of Water Activity

According to the AOAC Official Methods of Analysis, 16th ed., 1995. Method No. 978.18.

8.3 Method of Sampling

Sampling shall be in accordance with the FAO/WHO Codex Alimentarius Sampling Plans for Prepackaged Foods - CAC/RM 42-1969, Codex Alimentarius Volume 13, 1994.

9. REFERENCES

A.O. No. 153 s. 2004. **Guidelines, Current Good Manufacturing Practice in Manufacturing, Packing, Repacking or Holding Food**. Bureau of Food and Drugs. Department of Health. Alabang, Muntinlupa City, Philippines.

Association of Analytical Chemists. **Official Methods of Analysis Manual**. 16th ed., 1995. AOAC International. 481 North Frederick Ave., Suite 500, Gaithersburg, MD 20877-2417. U.S.A.

B.C. No.2006-016. **Updated List of Food Additives.** Bureau of Food and Drugs. Department of Health. Alabang, Muntinlupa City, Philippines.

FAO/WHO Codex Alimentarius Commission Manual. 1995. Codex Alimentarius Commission. Food and Agriculture Organization. Viale delle Terme di Caracalla, 00100 Rome, Italy.

Food, definition. ALINORM 04/27/41, para. 88 and Appendix VI. 2005. Codex Alimentarius Commission. Food and Agriculture Organization. Viale delle Terme di Caracalla, 00100 Rome, Italy.

Philippine National Standards No. 991:1993. **Agricultural and Other Food Products – Bottled Drinking Water Specifications**. Bureau of Product Standards. Department of Trade and Industry. Makati City, Philippines.

PNS/BAFPS 13:2004. **Philippine National Standard for Fresh Fruits – Mangoes – Specification**. Bureau of Agriculture and Fisheries

Product Standards. Department of Agriculture. Diliman, Quezon City, Philippines.

R.A. 3720. **Food, Drugs and Cosmetic Act.** Bureau of Food and Drugs. Department of Health. Alabang, Muntinlupa City, Philippines.

EVM/130807

Chapter 6 from Using Food Science and Technology to Improve Nutrition and Promote National Development, Robertson, G.L. & Lupien, J.R. (Eds), © International Union of Food Science & Technology (2008)

Improving the Operation of a Commercial Mango Dryer

Donald G. Mercer PhD PEng
Department of Food Science
University of Guelph
Guelph, Ontario, Canada
E-mail: dmercer@uoguelph.ca

Robert Myhara PhD FIFST CSci
Norman Paterson School of International Affairs
Carleton University
Ottawa, Ontario, Canada
E-mail: Rmyhara@connect.carleton.ca

ABSTRACT

Mangoes are an important commercial crop in many tropical countries. The drying of mangoes is an ideal value-added opportunity for processors in many developing countries because the processing requirements are relatively non-capital intensive. In addition, there is a ready market for the product both domestically and in the export trade. The regular export trade, dominated by a few countries in South East Asia, consists of mangoes dried with sulphites to stabilize color and with sugar added to improve product texture. Processors in Burkina Faso, West Africa have decided to focus their attentions on the organic market, since mangoes produced in this fashion can be sold at premium prices. The mangoes are usually dried near where they are grown in forced-air cabinet-type dryers fuelled by bottled gas or heated by solar radiation. Sensory quality is particularly difficult to control in this product since, without chemical stabilization or added sugar, colour changes (due to both enzymic and non-enzymic browning) and/or texture defects can occur. Careful control of temperature and humidity parameters as well as drying chamber design is critical to achieving optimal product quality. Dried mango can be used as an illustrative example of the impact of technology transfer on the improvement of small-scale food processors in developing countries. Operational problems that are typically encountered can prevent expansion and reduce profitability. Through technology transfer such problems can be overcome and economic viability achieved.

INTRODUCTION

In this case study, a representative food drying operation similar to many found in developing countries is considered. The fruit of the mango tree (*Mangifera* sp.) is a major commercial tropical tree fruit, grown in many countries of the world. Although the total production of mangoes in Africa is small in comparison to production in other areas of the world, the sale of fresh and dried mango represents an important domestic and export value-added opportunity.

Due to the perishable nature of fresh mangoes, their export to Europe and America from Africa represents a formidable challenge. Capital-intensive cold storage and refrigerated transportation requirements can easily be beyond the technical capabilities of processors in poorer African nations. Dried mangoes, however, are a less capital intensive value-added product that can be easily processed, stored and shipped.

World-wide, dried mango represents a multi-million dollar market. Aimed primarily at the American and Western European countries these dried mangoes, stabilized though the use of sulphites and added sugar, can be used as an ingredient in many products such as breakfast cereals and granola-type bars. Much of the production of dried mango for the above mentioned markets originates in Asian countries such as the Philippines and Thailand. African processors find it difficult to compete in this market with those countries.

Many African countries, however, have identified organically-grown and processed dried mangoes as a market in which they can compete, especially Europe. In Burkina Faso, the mango season begins in June, when especially certified growers (internationally certified by entities such as Eco-cert©) begin shipping their product, primarily from the South-West, to processors throughout the country. Although most mango dryers are centered around Bobo-Dioulasso, many processors also operate outside that area (e.g., Ouagadougou).

In Burkina Faso, processors can operate their businesses in cooperation with other similar processors as a kind of commodity-based cooperative or club (Fr. approche filière), or as an independent entity. The advantage of the filière approach is enhanced access to technical support from governments and Non-Governmental Organizations (NGOs). Mangoes are transported to the processing establishment where they are stored (some for final ripening), sorted and washed.

Washed mangoes enter the processing areas, where they peeled and sliced by hand into about 1cm thick slices. The slices are then arranged upon a drying frame that consists of a fine nylon mesh, placed over a large metal screen, which in turn is supported by a wooden frame (Figure 1). Frame size is about 0.75m by 1.0 m. The processing facility is certified organic by an internationally recognized certifier (Eco-cert©), and meets all of the sanitation and food safety requirements of that organization.

Figure 1: Mango slices being placed onto drying frames

Figure 2: Small production-scale cabinet dryers

Figure 2 shows the small production-scale cabinet dryers that use heated air as the drying medium. Each dryer chamber is about 0.75m wide and about 2.5 m tall. In a typical installation there are eight such chambers. The drying frames, containing the mango slices, are slid into an open chamber, each chamber holding about 20 frames. Once fully loaded, the doors of the dryer are closed and drying commences. After an appropriate time, the dried mango slices are removed from the dryer, cooled, inspected and placed into low density polyethylene plastic bags which are then heat-sealed and labelled.

DEFINING THE PROBLEM

The mangoes produced by these processors must meet organic standards. This means that sulphites or other types of preservatives cannot be used to control enzymic browning. Rather control of enzymic browning must be attained through careful control of product temperature and moisture content. In addition, since no sugar can be added, the texture of the product must be controlled through careful control of water activity (a_w). In an attempt to control enzymic browning, the processors start the drying process at very high temperatures (often as hot as 80°C). Theoretically, thermal denaturation of the intrinsic polyphenol oxidase should occur at this temperature. Drying temperatures are slowly reduced over an 8-12 hour period to about 65°C. There is no monitoring or control of product moisture content, or humidity of the drying air.

Even though the dryer is being supplied with high temperature air, drying of the mango slices is not uniform. When the drying chambers are opened after drying, some slices appear too dry and have inconsistent colour (too dark). The texture of the dry slices also appear to be inconsistent, with some too firm. Paradoxically, a portion of the mango slices appears to be too moist at the end of the run, with voids, or pockets of un-dried mango contained within a pocket of dried, firm mango. If dried mango slices are not quickly placed into heat-sealed plastic bags, they begin to noticeably darken within 2 days.

It would seem obvious that process control has not been achieved using the present regimen. Although denaturation of browning enzymes should occur at temperatures approximating 80°C, the actual temperature of the mango slices will be substantially lower. In this non-adiabatic process, water evaporation from the surfaces of the mango slices reduces internal temperatures. Consequently little control of enzymic browning can occur, resulting in the browning phenomenon seen when dried mangoes are exposed to the air. The texture of the mango slices appears be too dry and firm. Texture control of the product must be achieved through careful control of a_w, allowing the natural sugars present in the fruit to act as humectants. Additional textural defects appear from the effect of case-hardening, where too rapid evaporation of moisture from slice surfaces, hinders or blocks the migration of moisture from the slice interior to the surface. Indeed, some slices must then be placed back into the dryer and dried for several additional hours. Running the dryer with only a partial load of product creates an additional cost and reduces the number of batches that can be dried over the course of the mango processing season.

At these high drying temperatures and high air flow-rates, the problem of browning and non-uniform drying persists. Until the design of the existing dryers and the drying regimens change, very little can be done to significantly improve the quality and value-added opportunity of the product.

In addition to these problems with the mango drying, owner are faced with the seasonal nature of their business. Once the crop of mangoes is harvested and dried, the equipment sits idle until the next processing season begins. In order to maximize the use of their capital assets and spread fixed costs over a longer time period, owners would like to diversify the drying operation by drying other materials during the 'off-season'. However, due to the difficulties being experienced with the mangoes, this is not considered to be a viable option until the dryer problems are resolved.

DESCRIPTION OF THE CABINET DRYER

A schematic diagram of the cabinet dryer is shown in Figure 3. Dimensions of the dryer are not stated since this is meant to represent a generic unit rather than that of a specific operation. Air is drawn into the bottom of the cabinet dryer by fan, is heated by bottled gas, and forced into the drying chamber. Heated air is directed across a number of drying frames containing sliced mangoes in the first dryer section (section "A" in Figure 3). For clarity, only three frames are shown in each section of the dryer, although in actual dryers there are often more than this number. After reaching the downstream end of section "A", the air is directed upwards into section "B" which is separated from section "A" by strategically placed partial ply-wood partitions.

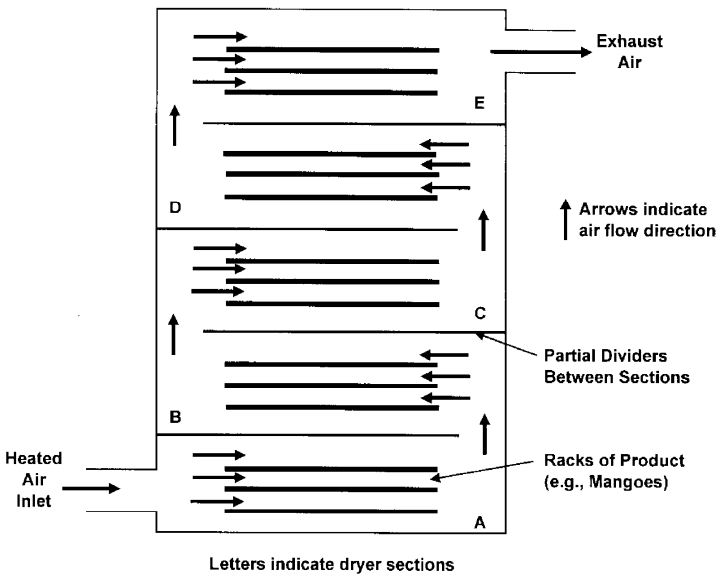

Figure 3: Schematic Diagram of a Production-Scale Cabinet Dryer

The air that has left section 'A' then reverses direction and passes across the frames of sliced mangoes located in section 'B'. At the end of section 'B', the air is once again directed upwards into the third section of the dryer, section 'C', where air flow is once again reversed. Air continues up in this serpentine way through sections 'D' and 'E', after which the air is exhausted into a plenum arrangement, combining the exhaust of two chambers at the top of the dryers and expelled through a common flue.

Temperature of the drying air can be monitored by three or four dial thermometers inserted through the walls of each section. There are no automated process controls on the drying units. Airflow is controlled by adjusting the speed of a motor on a fan that introduces the air into the first zone of the dryer. As with most dryers of this type, the fan is usually run at full speed to maintain maximum air flow to the dryer.

MANGO – COMPOSITION AND DRYING CONDITIONS

The fruit of the Mango tree (*Mangifera* sp.) grown in Burkina Faso are about 125 mm long and about 75 mm in width. The fruit consists of an inedible central flat seed surrounded by yellow flesh and an outer inedible skin. The edible flesh contains about 82% moisture. The main chemical constituents on a % dry weight basis (% d.b.) are shown in Table 1 (3).

The flesh contains about 70% sugar, mostly composed of sucrose, and a relatively large amount of fibre, reflecting the fibrous nature of the fruit. Mango is unlike fruits such as raisin or dates which contain large amounts of sugar, but relatively small amounts of fibre. The fibrous nature of the fruit

explains why dry mango tends to be somewhat firm in texture. Careful control of a_w is essential if the processor is to avoid an overly tough consistency. Figure 4 shows generic water sorption isotherms of mango fruit (3).

Table 1: Compositional Data for Selected Fruit Including Mango (% d.b.)

Fruit	Fru	Glu	Suc	NSP Ara	NSP Xyl	NSP Man	NSP Gal	NSP Glu	NSP Uronic acid	Protein	Ash
Raisin	51.16	43.14	0.00	0.20	0.10	0.00	0.00	0.90	1.10	3.05	2.32
Date	42.25	43.55	0.53	0.17	0.54	0.16	0.34	1.68	1.55	2.39	1.94
Pineapple	21.36	18.33	44.40	1.20	2.10	0.30	0.70	4.00	0.70	2.72	2.72
Mango	17.68	6.36	46.11	3.70	1.10	0.20	1.70	5.40	5.90	3.83	2.19

Fru = Fructose Glu = Glucose Suc = Sucrose Ara = Arabinose Xyl = Xylose
NSP = Non-starch Polysaccharides Man = Mannose Gal = Galactose

In general, dried fruit are considered shelf stable if the a_w is at 0.6 or below. For dried mangoes, the equilibrium moisture content (% d.b.) equivalent to an a_w of 0.6 is about 15% moisture. Careful monitoring of the mango slices as they are drying is essential to avoid over drying. Such over drying could lead to texture defects such as tough consistency.

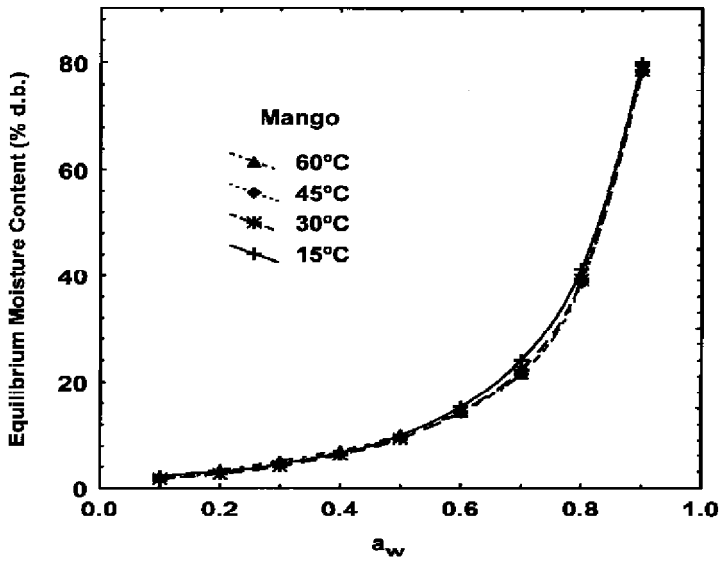

Figure 4: Water Sorption Isotherms of Mango (3)

PROBLEMS ENCOUNTERED DURING DRYING

Through experience, the dryer operators know approximately how long it takes to process an average load of mangoes. After drying for this amount of time, the dryer is shut down and opened to remove the racks of dried product. In general, the mango slices in section 'A' at the bottom of the dryer (Figure 3) are over-dried (i.e., their moisture content is below that considered acceptable) and they are darker in colour (probably due to Maillard reaction products) than those in section 'E' which is the last section of this particular dryer. The mango slices in section 'A' also have a less pliable texture (due to the extremely low a_w) than the softer slices in the final sections of the dryer. Not only is there variation in moisture content from the bottom to the top of the dryer, but moisture content variation also occurs within each section of the dryer. There are often regions along the centre of each rack where the mango slices are drier than those along the edges of the rack. Often, the mango slices on the bottom rack in sections 'B', 'C', 'D' and 'E' are not as dry as those on the upper racks in these sections.

Faced with the problems outlined above, processors may experience excessive rejection of product that fails to meet specifications for moisture, colour, and texture attributes. Mango slices with excessive moisture levels (especially those in section 'E') must receive additional drying which reduces the number of full loads of product that can be scheduled. Overly dry dark product cannot be sold at a premium price, and when possible is sold at a loss to recover some of the production costs. Hand sorting of mango slices from each dried batch to remove high moisture product for reprocessing and overly dried product adds to the labour costs.

In order to improve the operational efficiencies of the mango drying operation, the processor should conduct a thorough 'audit' of the drying process. This audit should consist of two tasks. The first task is to evaluate the drying protocols regarding drying times and temperatures. A flow-chart diagram of the process should be constructed which can outline where potential problems can be identified. Once the locations of the problems have been identified, protocols can be changed to address those problems. These protocols have a profound and direct effect upon the quality attributes of the product. The second task should be to assess the drying equipment itself, to better measure drying parameters and enhance drying efficiencies. Since airflow is one of the primary contributors to drying, along with time and temperature, it seems reasonable to begin by examining airflow patterns within the dryer. While pitot tubes or anemometers could be used to determine actual air velocities and pressure taps could be installed in the dryer to determine uneven pressure distribution, these devices are not really necessary for a basic examination of how the dryer is functioning.

In a developing world situation, it is important that this audit be carried out in as simple a fashion as possible, due to limitations in access to capital and technical expertise. The audit should not be an overly arduous task involving sophisticated analytical equipment.

TASK ONE - DRYING PROTOCOLS

Before making any modifications to the dryer or changing operating conditions, it is necessary to understand what happens to the mangoes during the drying process. In this way, conditions can be better matched to the needs of the product which is something often neglected in many drying processes.

By following a volume element of air through the dryer (as shown in Figure 3), a true appreciation of the process can be obtained. As a volume of air enters section 'A' of the dryer, it is at a high temperature (e.g., 80°C) and at low absolute moisture content. Its ability to remove moisture is high, and it readily takes up moisture from the surface of the mango slices located in section 'A'. The air will also be distributed in a relatively uniform manner due to the inherent design of the air inlet into this section. The relatively dry air absorbs moisture from the product, and its (the air) temperature decreases. As the moisture content of the mangoes decreases, their temperature comes into equilibrium with that of the air. This process continues in section 'A' as the air gains more moisture and loses more heat. It is important to realize that although the main purpose of the very high air temperature (besides removing moisture) is to denature the polyphenol oxidase, no such denaturation can occur, since its (the air) temperature is reduced well below that necessary for enzyme inactivation. As a result, enzymic browning can occur (2). Of perhaps more serious consequence, the high rate of moisture loss from the surface of the mango slices creates a surface layer of very dry mango. This surface layer, once formed, has a very limited ability for rehydration, and can prevent moisture from migrating from the interior of the mango slice to its surface. This phenomenon, known as case-hardening, can block further moisture loss and can lead to the development of interior pockets of moisture which are very hard to eliminate.

As the air continues on its journey, the combination of heat loss and increased level of saturation reduces the water removal capacity of the air as it enters section 'B'. In section 'B', the air will still have sufficient ability to remove water from the mangoes, but it will gain additional moisture and lose more heat as it does so. As the air enters section 'C', its water removal capacity will be further diminished and it will once more gain moisture and lose heat as it passes across the mango slices in this dryer section. By the time the air reaches sections 'D' and 'E' in the dryer, it will no longer be able

to remove moisture from the product at the same rate that it did when it entered section 'A' of the dryer.

If the dryer is operated to produce a satisfactory product moisture in the final section, product in the four previous sections will most likely be overly dried and be suffering other quality attribute problems such as off-colour development and textural defects. From this, it is evident that measures must be taken to ensure that product in each section of the dryer receives a uniformly distributed supply of air at a suitable temperature and initial moisture content to promote optimal quality attributes and efficient drying.

Psychrometric charts coupled with wet and dry bulb temperatures, or dry bulb temperatures and relative humidity readings, taken throughout the dryer can provide a more exact indication of what is occurring to the air as it passes through the various dryer sections. However, simply envisioning that the air is becoming more heavily loaded with moisture and is losing heat as it does so, points out the need for an alternate approach to the drying protocol and how air flow is managed in the dryer.

Figure 5 shows the effects of air velocity (at 50°C) on the water removal from mango slices in a laboratory-scale tray dryer (1). By plotting the moisture ratio (i.e., the dry basis moisture of the mango slices at time "t" divided by their initial dry basis moisture), drying test runs can be compared directly without the distraction of having different starting moistures. In these tests, observations were taken every fifteen minutes over the course of the dryer runs. By comparing the moisture ratios for the mango drying at 50°C with air velocities of 0.2 m/s and 0.5 m/s as shown in Figure 5, it can be seen that increasing the linear air velocity across the surface of the mango slices has a pronounced effect on the rate at which moisture is removed. This can be attributed, in part, to disruption of the stagnant boundary layer of air that impedes the removal of water from the saturated surface of the mango slices. With continuous removal of moisture from the product surface, drying efficiencies are enhanced.

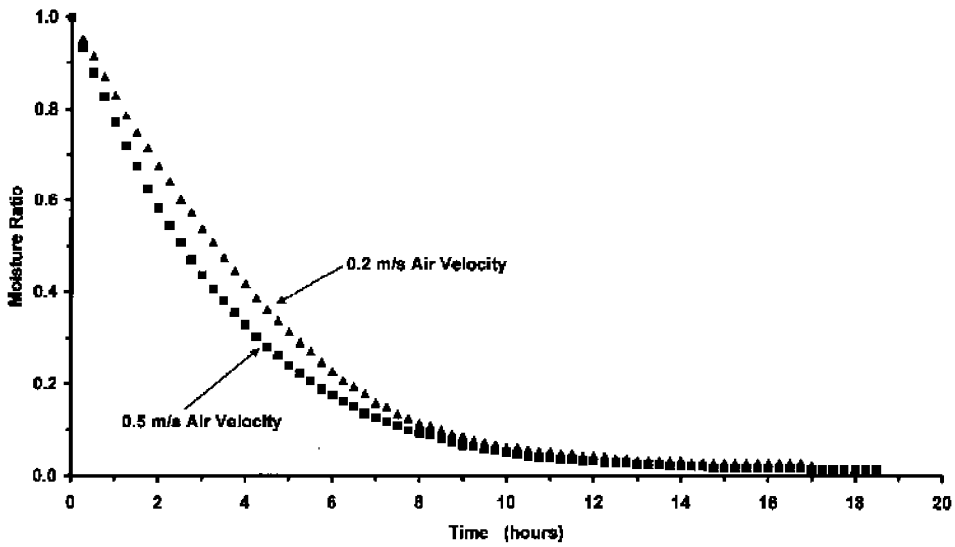

Figure 5: Moisture Ratios versus Drying Time for Mangoes in a Tray Dryer at 50ºC with 0.2 m/s and 0.5 m/s Air Velocities

Figure 6 shows how increasing the temperature with an air velocity of 0.5 m/s can add to the efficiency of water removal for the mangoes (1). Water removal rates during the first 2.5 hours for the drying runs reported in Figures 5 and 6 are presented in Table 2. These values were obtained from plots representing the initial constant rate drying period for mangoes (d.b. moisture versus time), which are not shown in this paper.

Table 2: Water Removal Rates of Mango Slices under Various Drying Conditions

Drying Conditions	Initial Water Removal Rates (g water/g dry solids/hour)
0.2 m/s Air Velocity at 50°C	0.73
0.5 m/s Air Velocity at 50°C	1.38
0.5 m/s Air Velocity at 55°C	1.46
0.5 m/s Air Velocity at 60°C	1.69

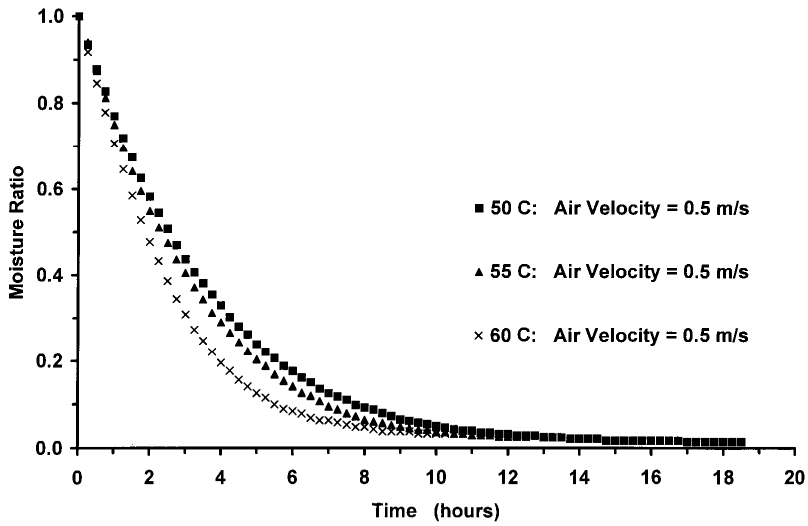

Figure 6: Moisture Ratios versus Drying Time for Mangoes in a Tray Dryer at Various Temperatures

Photographs of the mango slices at the start and end of a drying run appear as Figures 7 and 8, respectively. Figure 8a shows the dried mango slices on the metal rack inside the laboratory-scale tray dryer, while Figure 8b shows them after they have been removed from the dryer.

Figure 7: Mango Slices at Start of Drying on Rack in Tray Dryer

Figure 8a: Slices of Mango after Drying on Rack in Tray Dryer

Figure 8b: Slices of Mango after Drying in Tray Dryer (removed from dryer)

Using this information, it becomes quite obvious that drying efficiency increases with an increase in air velocity and temperature (for a given moisture content). In order to produce optimal drying conditions to achieve improved product quality, the drying protocol needs to be carefully monitored. The moisture content and temperature of the drying air need to be as constant as possible as it passes across the complete drying frame. The uniformity of the air distribution patterns must also be increased in order to maintain optimal air velocity.

With enhanced air distribution, the drying protocol should be altered to take advantage of these improvements. Initial drying air temperature should be reduced from the current 80°C to a more moderate 50°C. At the lower water removal rates, moisture from the mango slice interior will have time to migrate to the surface, where it can in turn evaporate. This lower initial water removal rate will avoid problems associated with case-hardening. As drying proceeds, the temperature of the drying air should be slowing increased, still allowing for the movement of water within the mango slices, but also compensating for the lower water moisture removal rates, the result of lowering a_w and increased water binding. Drying air (and mango slice) temperatures as high as 80°C could be tolerated in order to denature browning enzymes; as the product nears the monolayer moisture point. As the product approaches the monolayer moisture point, however, drying air temperature should again be reduced to more moderate temperatures (50°C) to reduce the production of Maillard reaction products (2).

TASK TWO - ASSESSMENT OF DRYING EQUIPMENT

Looking at Figure 3, it can be seen that air entering section 'A' of the dryer strikes a vertical wall at the end of the section and is then forced upwards into section 'B' where it strikes the bottom surface of the horizontal divider between the top of section 'B' and the bottom of section 'C. This flow pattern is repeated each time the air leaves one section of the dryer and enters the next section. The combination of two 90° turns for the air leaving one section and entering the next creates non-uniform air distribution patterns.

One potential way to create a more even air distribution pattern would be to install louvers at the downstream end of each section mounted at a 45° angle to deflect the air upwards into the next section. Similarly, louvers could be mounted at a 45° angle at the upstream end of the following sections to deflect horizontally across the racks of mango slices. In this way, the lower racks of product would receive more airflow than they did previously. Figure 9 shows how modifications could be made by installing louvers and deflectors to direct the air as it travels from one section of the dryer to the next.

By improving the air distribution pattern in the cabinet dryer used for the mangoes, higher linear velocities could be achieved to enhance water removal and drying uniformity. Increased turbulence across the surface of the racks can reduce the 'wall effects' noted in many dryers with poor airflow distribution. It may also be advisable to install several deflectors at the upstream end of each dryer section to deflect air towards the walls of the dryer and minimize side-to-side moisture variations.

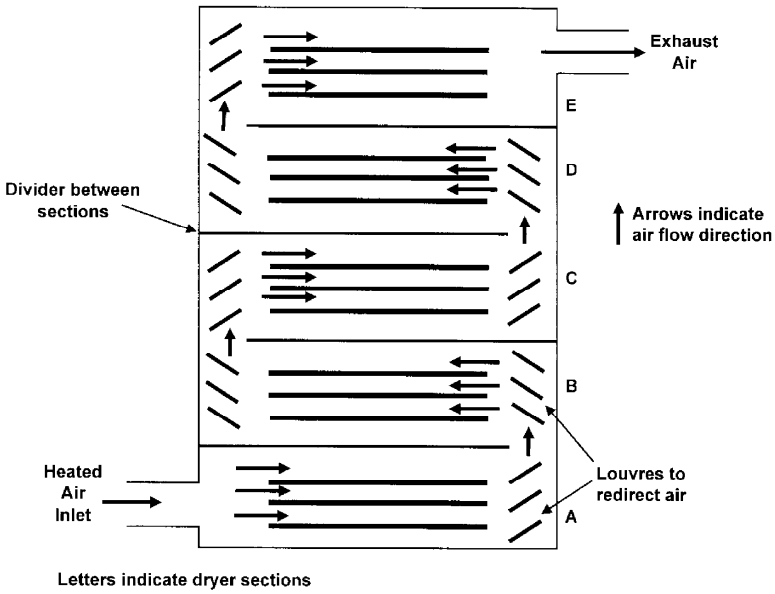

Figure 9: Schematic Diagram of Modified Production-Scale Cabinet Dryer (based on design presented in Figure 3)

There is one significant feature of the dryer design in Figure 3 and the improved design with louvers shown in Figure 9 that still needs to be addressed. Air passing over the mango slices in each dryer section travels to the next section where it is expected to remove water from the mango slices located there. 'Water removal capacity' is an effective manner in which to envision the ability of air to remove moisture from a product. To determine the water removal capacity of air, it is necessary to know how much water the air contains compared to how much water the air could hold if it was fully saturated at that temperature. Absolute moisture contents can be obtained from psychrometric charts, when the dry bulb temperature and wet bulb temperature or relative humidity of the air, are known.

The difference between the amount of water the air is holding and the amount of water it can hold when saturated (i.e., 100% relative humidity) can be described as its maximum water removal capacity.

Figure 10 shows a proposed re-designed cabinet dryer which addresses the problems experienced with the original dryer shown in Figures 3 and 9. Heated air is blown into a plenum that runs the full height of the cabinet dryer. Several entry points, instead of one single supply point, could enhance the uniformity of air distribution into the heated air plenum. Perforated panels form a wall between the heated air plenum and the five sections containing product to be dried. These panels consist of sheet metal or other appropriate matter with small holes (e.g., 2 cm diameter) drilled at regular intervals to provide an open area of approximately 30% to 40% of the total panel area. They act to create a back-pressure in the hot air supply plenum which then promotes uniform distribution of the air into the drying sections. In this way, all five sections of the dryer will receive a relatively uniform supply of heated air with enough water removal capacity to remove moisture from the mango slices. The velocity of the air will also be sufficient to sweep away the stagnant boundary layers that inhibit moisture removal. Once the air leaves each dryer section, it passes through a second set of perforated plates designed to maintain uniform air distribution inside the drying sections. The air then enters an exhaust plenum where it is directed out of the dryer. The exhaust air could then pass through a counter-current heat exchanger where its residual heat could be used to warm fresh incoming air. Optionally, a portion of the exhaust air could be mixed with fresh incoming air to recover some of the heat, providing the exhaust air's water content is not too high for this purpose.

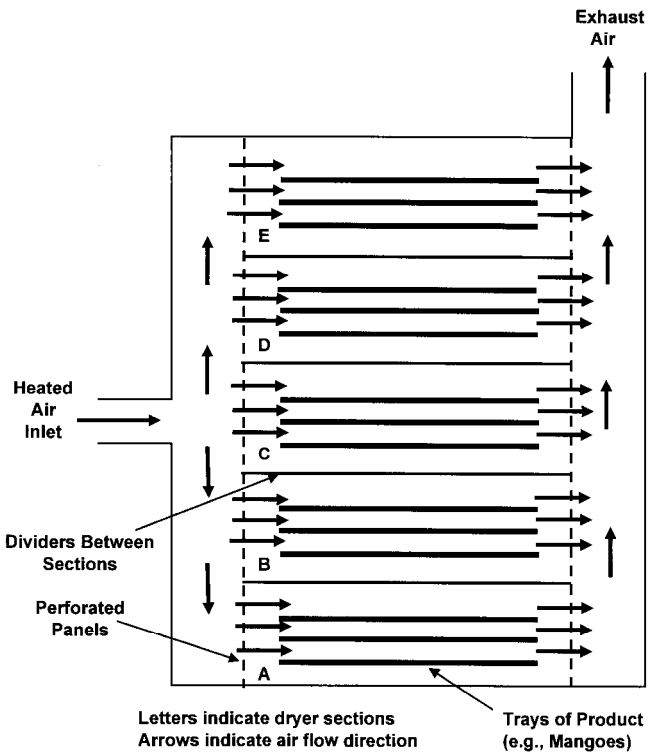

Figure 10: Schematic Diagram of Re-Designed Cabinet Dryer

For smaller dryer loads, sections of the dryer could be blocked off and only as many sections as required would need to be used. This further enhances the flexibility and efficiency of the dryer's operation.

ECONOMIC OPPORTUNITIES

By reassessing drying protocols and re-designing dryers, processors can reduce product variability, thereby lowering losses due to excessive rejection of product that fails to meet specifications for moisture, colour, and texture attributes. This would lead to improved efficiency and enhanced profitability. More runs could be conducted during the harvest season since there would be less need to re-dry mango slices from runs which previously contained overly moist product.

Increased flexibility and uniformity in dryer operation would allow processors to seek out alternate products to dry when mangoes are out of season. Other fruits and vegetables requiring different

drying conditions could be dried by altering drying protocols and dryer configurations to meet the different drying needs. Having the dryer in operation throughout the year would maximize the utilization of the business's capital assets and take advantage of a variety of opportunities.

When dryers are operated year-round, rural employment can become less seasonal and more sustainable. These benefits could then spread throughout the local community. With a larger industrial processing base, capacity expansion or additional diversification could be possible. This would further increase rural employment, providing economic benefits for all. By understanding the drying kinetics of each product being dried, process operating protocols could be modified to match air temperature to the drying needs of the product. During the initial and later stages of drying, lower temperatures may be required by the product. This would allow the dryer to be operated at lower temperatures for as much as half of the drying cycle, resulting in fuel savings and lowering production cost. Not only would this result in fuel cost savings, but over-drying and under-drying could be reduced thereby improving product quality, resulting in more saleable product per dryer run with subsequent improved profitability.

SUMMARY

Small and medium-scale businesses that produce value-added products provide opportunities for economic development in many developing countries. These businesses create jobs and provide much needed incomes for the urban and rural poor. These value-added products, produced from locally sourced raw materials, are not capital intensive, and take advantage of local labour markets, providing decent incomes for those that otherwise would continue to exist in impoverished conditions.

It is important for donor nations, in their official developmental assistance (ODA) programs, to support private sector entrepreneurs in the developing world. With such support, the entrepreneurs will be in a better position to identify markets and develop suitable processing technologies. Continued improvements in production processes can result in new and expanded markets, which in turn can enhance efficiencies and profitability.

Although technology transfer from developed nations is an essential part of any donor nation's ODA, it is important for them to understand the economic and infrastructural constraints found in the developing world. In environments which lack capital with poor infrastructure, optimization of relatively simple, straight-forward processes should be favoured. By examining the mango drying business from a fundamental perspective, basic changes can be recommended that have the potential to overcome most of the difficulties outlined in this case study. It is important, however, for developed countries to promote appropriate technologies: to do otherwise would be to chance disappointing results.

REFERENCES

1. Mercer, D.G., 2007. Unpublished data.

2. Devereau, A.D.; Myhara, R.; Anderson, C. Physical Factors in Post-Harvest Quality. In: Crop Post-Harvest: Science and Technology, Vol 1. Principles and Practice. Golob, P., Farrell, G., Orchard, J.E., Eds; Blackwell Science Ltd: London, United Kingdom, 2002; pp. 69-92.

3. Myhara, R.M.; Sablani, S.S. Unification of fruit moisture sorption isotherms using artificial neural networks. Drying Technology 2001, 19 (8), 1543-1554.

ACKNOWLEDGEMENT

The financial support of the Canadian International Development Agency (CIDA) for this project is gratefully acknowledged.

Drying Kinetics and Colour Change of Mango Slices as Affected by Drying Temperature and Time

El-Amin Omda Mohamed Akoy1, Dieter Von Hörsten2, Wolfgang Luecke2
1University of Zalingei, Department of Agricultural Engineering, Sudan, e-mail: aminoz71@yahoo.com
2Georg-August-Universit¨at Goettingen, Institute of Agricultural Engineering, Germany

Written for presentation at the
2008 Tropentag International Conference on
"Competition for Resources in a Changing World:
New Drive for Rural Development"
Hohenheim, Germany
7-9 October 2008

Abstract. Thin-layer drying behaviour of mango slices (var. Kent) was investigated in a laboratory scale dryer, using heated ambient air temperatures of 60, 70 and 80°C at a constant air velocity of 1.5m/s and 3mm slice thickness. Besides the effects of drying air temperature on the drying characteristics, drying time and quality of dried products were determined. Drying curves obtained from the experimental data were then fitted to three well-known semi-empirical thin-layer drying models (Lewis model, Page model and Henderson & Pabis model). Model constants and coefficients were determined by nonlinear regression method. All the models were compared according to statistical parameters. Among the drying models investigated, the Page model satisfactory described the drying behaviour of mango slices. The effective moisture diffusivity varied from 4.97×10^{-10} to10.83×10^{-10} m^2/s. Results indicated that drying took place in the falling rate period. The results have shown that, increasing air temperature causes shorter drying times. The combined effect of drying temperature and time on colour and re-hydration ratio were also evaluated. The colour was measured from the surface and expressed in the Hunter L*a*b* system. Moreover, the total colour change (ΔE), chroma (colour saturation), hue angle and browning index (BI) were determined. L* and b* parameters were found to decrease as affected by drying temperature and drying time, whereas a* parameter increases. Results also indicated that drying time has significant effect on colour change and rehydration ratio. The lowest total colour change and highest rehydration ratio were obtained at drying air temperature of 80C then 70 and finally 60C with drying time of 3,5 and 7 hours, respectively. In contrast to common practice, drying at elevated air temperature (80°C), instead of 60°C for a longer time, was optimal, since significant colour changes of mango slices were not observed. Moreover, at increased temperature, drying time was considerably shortened from about 7 h to 3h, resulting in significant extension of drying capacity.

Keywords: Colour change, drying models, mango slices, re-hydration ratio, thin-layer drying

Introduction

Mango (*Mangifera indica* L.) is one of the tropical and subtropical fruit of great importance for both economical and nutritional point of view. It is considered to be a good source of carbohydrates, vitamin C and very rich source of pro-vitamin A. In spite of its excellence, the perishable nature of this fruit and its short harvest season severely limit utilization. Drying may be an interesting method in order to prevent fresh fruit deterioration.

Drying is one of the most widely used primary methods of food preservation. The objective drying is the removal of water to the level at which microbial spoilage and deterioration reactions are greatly minimized (Akpinar and Bicer, 2004). It also provides longer shelf-life, smaller space for storage and lighter weight for transportation (Ertekin and Yaldiz, 2004). Sun drying is the most common method used to preserve agricultural products in tropical and subtropical countries. However, being unprotected from rain, wind-borne dirt and dust, infestation by insects, rodents and other animal, products may be seriously degraded to the extent that sometimes become inedible and the resulted loss of food quality in the dried products may have adverse economic effects on domestics and international markets. Therefore, the drying process of agricultural products should be undertaken in closed equipment (solar or industrial dryer) to improve the quality of the final product. The re-hydration capacity and colour characteristics were considered as the most important quality parameters for the dehydrated products. The re-hydration capacity is used to express ability of the dried material to absorb water.

The first quality judgment made by a consumer on a food at the point of sale is its visual appearance. Appearance analyses of foods are used in maintenance of food quality throughout and at the end of processing. Colour is one of the most important appearance attribute of food materials, since it influences consumer acceptability. Abnormal colours, especially those associated with deterioration in eating quality or with spoilage, cause the product to be rejected by the consumer (Avila and Silva, 1999). Therefore, the objectives of this study were:

1-To investigate the drying kinetics of mango fruit

2- To evaluate a suitable drying model for describing the drying process of mango fruit.

3- To determine the optimum drying temperature of mango fruit

4-To investigate the combined effect of drying temperature and time on colour change and re-hydration ratio

Materials and Methods

Raw Material

Fresh mangoes, var. “Kent”, from Mali, were purchased at the wholesale market in Goettingen, Germany. The mangoes were left for 5days for post harvest ripening at 25±2ºC and 50% relative humidity (Pott et al, 2005). Fresh fruits were washed, manually peeled using stainless steel knife and sliced using an electric food-slicer (Krups variotronic, Germany) at 3 mm thickness.

Drying experiments

Drying experiments were performed in a laboratory cross flow dryer, Heraeus (Schütt, UT 6120 type, Germany). This is consisted of heating unit, temperature control unit, drying chamber and centrifugal fan of constant air velocity of 1.5 m/s. The average initial moisture content of the mango fruit was 82.5±0.4 % (w.b.), as determined by convective air drying at 135°C for 2h (AOAC, 2000)

Prior to starting the experiments, the dryer was run idle for about half an hour to reach thermal stabilization. Then the samples were uniformly spread within the tray as single layer of 3mm thickness. A representative sample of sliced mango for moisture loss assessment was placed in circular wire mesh of 10cm diameter and placed on to the centre of the tray. For measuring the mass of sample at any time during experimentation, sample on circular wire mesh was taken out of drying chamber and weighed on the digital balance and placed back into the drying chamber every 30 min during drying. The digital top pan balance 600±0.001g, (Sartorius, Goettingen, Germany) was kept near to the drying unit and weight measurement process took less than 10 seconds time. The drying process was stopped when the moisture

content decreases to about 9±0.2 % (w.b). All the experiments were replicated two times at each air temperature and the average values were used for calculation.

Table.1.Slected drying models for describing mango slices drying data

Model name	Equation	References
Newton	MR= exp (-kt)	Lewis (1921
Henderson and Pabis	MR= a exp (-kt)	Henderson and Pabis (1961
Page	MR= exp ($-kt^n$)	Page (1949)

Non-linear regression analysis was used to evaluate the parameters of the selected models. The goodness of fit was determined using the four statistical parameters, i.e. coefficient of determination (R^2), the sum square error (SSE), The reduced chi-square (χ^2) and root mean square error (RMES). These parameters can be described in the following equations:

$$(SSE) = 1/N \Sigma^N_{i=1} (MR_{exp,i} - MR_{pred,i})^2 \quad (1)$$

$$(\chi 2) = \frac{\Sigma^N_{i=1} (MR_{exp,i} - MR_{pred,i})^2}{N-n} \quad (2)$$

$$(RMSE) = (1/N \Sigma^N_{i=1} (MR_{exp,i} - MR_{pred,i})^2)^{1/2} \quad (3)$$

Where:
exp. = Experimental data
pred. = Predicted data
N = Number of observations
n = Number of constants

Colour measurements

Colour parameters were measured with a Minolta CR-310 Chroma-meter (Minolta, Japan). The chroma meter consists of the respective measuring head and the data processor. The measuring head of the chroma meter CR-310 uses wide-area illumination and a 0° viewing angle and has 50 mm-diameter measuring area to average the reading. Hunter scale (L*, a*, b*) system was used. The Chroma meter was calibrated with a white standard tile with illuminant D_{65}(Y=94.3, x= .3156 and y= .3324) equivalent to HL system: HL = 97.10, a = -0.17 and b= 1.80. Calibration was made at each experiment. The parameter L* represents the brightness of the colour, a* the hue range of the colours red (+) and green (-) and b*hue range of colours yellow (+) and blue (-). Three measurements were made on the surface of sliced mango fresh and after drying and average values were made for calculation and each experiment was duplicated. From the colour values, total colour change (ΔE), chroma (C), hue angle (h) and browning index (BI) were calculated using equations described by Maskan (2001):

$$\Delta E = ((L_0-L)^2 + (a_0 - a)^2 + (b_0 - b)^2)^{1/2} \quad (4)$$

$$Chroma = (a^2 + b^2)^{1/2} \quad (5)$$

$$Hue\ angle = \tan^{-1}(b/a) \quad (6)$$

Where; subscript "0" refers to the colour reading of fresh mango slices. Fresh mango was used as a reference and a larger ΔE denotes greater colour change from the reference material (Maskan, 2001).

$$BI = [100(x-0.31)] / 0.17 \quad (7)$$

Where:

$$x = (a + 1.75L)/ (5.645L + a - 3.012b)$$

Re-hydration ratio (Reconstitution ratio)

Re-hydration ratio was determined according to the official method of AOAC (1984), 5g of dried sample was soaked for 30 and 60 minutes in 50 ml distilled water, filtered through filter paper and then the filtrates were weighed.

Re-hydration ratio (R/R) = W_2/W_1 (8)

Where: W_2 = weight of drained material, g

W_1 = weight of dried material, g

Results and discussion

Drying characteristics

The effect of three temperatures on the drying curves of mango slices are shown in Fig. 1. it can be observed that there is no constant rate drying period in the drying of mango slices, and all the drying process occurred in the falling rate period. This indicates that diffusion is the dominant physical mechanisms governing moisture movement in the samples. These results are in agreement with Goyal et al (2006) for mango fruit.

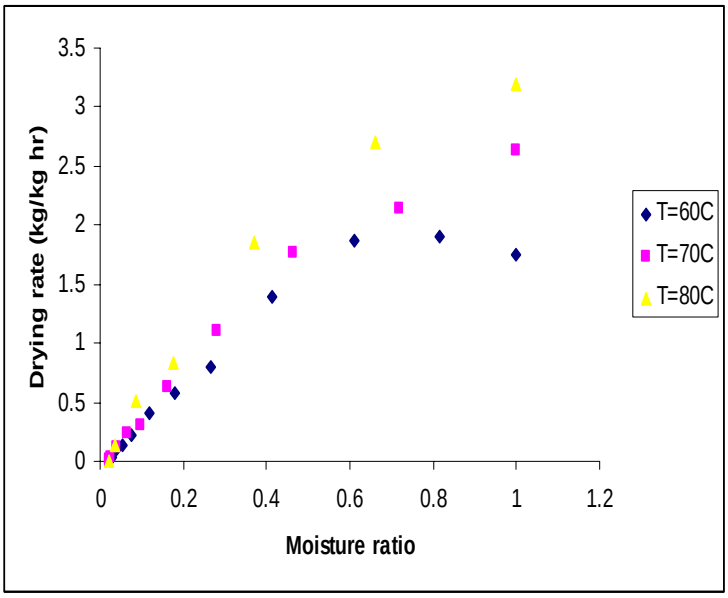

Fig. 1. Effect of drying air temperature and moisture ratio on the drying rate of mango slices.

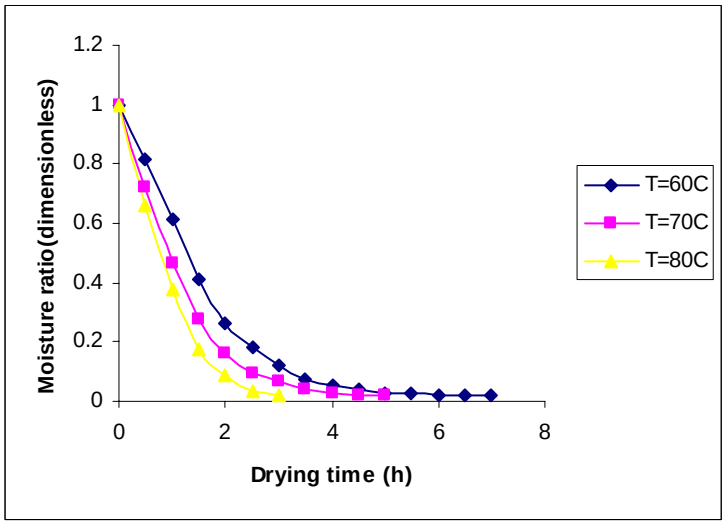

Fig. 2. Effect of drying air temperature and drying time on the moisture ratio of mango slices.

Combined effect of drying temperature and time on product colour

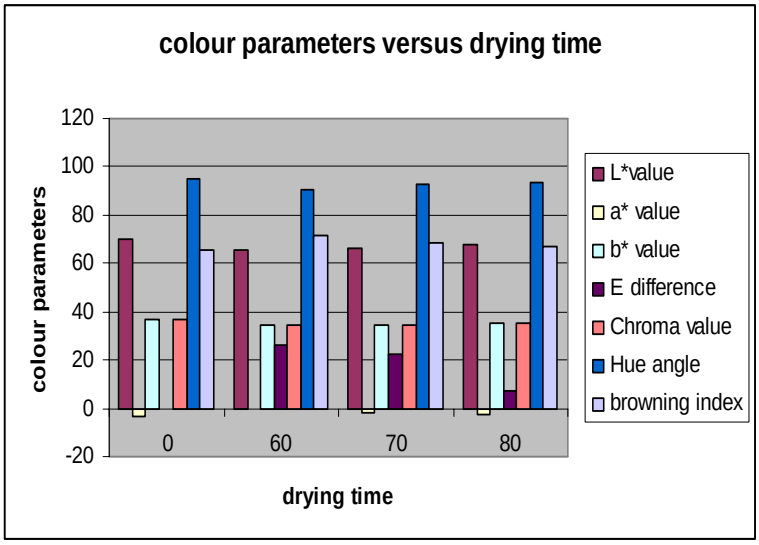

Fig.3. Colour parameters versus drying temperature

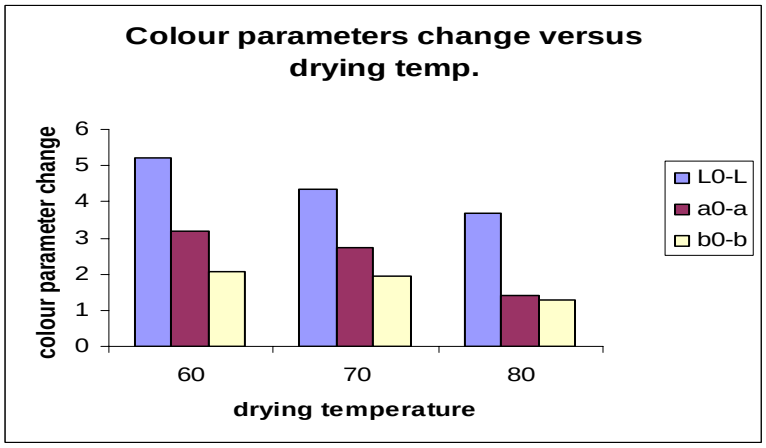

Fig.4. Colour parameters changes versus drying temperature

Re-hydration ratio of dried mango slices

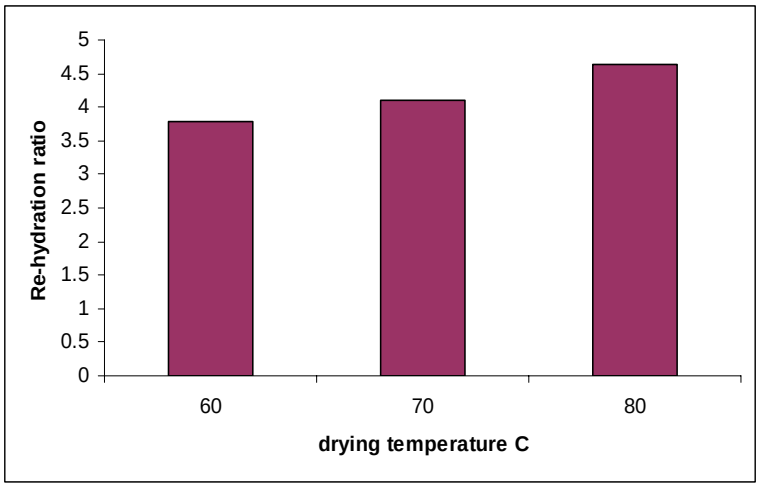

Fig.5. Combined effect of drying temperature and time on rehydration ratio of mango slices

Conclusions

The following conclusions can be drawn from this study**: -**

1- All the drying process of mango slices occurs in falling rate drying period.

2- The optimum drying temperature of mango slices is found to be 80ºC.

3- Drying time has significant effect on colour change of mango fruit

4- Page model was found to predict thin-layer drying characteristics of mango fruit well.

References

Akpinar, E. K., and Bicer, Y. (2004). Modelling of the drying of eggplants in thin-layers. International journal of food science and technology, 39:1-9.

AOAC (1984). Association of official analytical chemist. Official methods of analysis 14th ed. Washington. D.C.

AOAC. (2000). Official method of analysis. No.920.149149(c).17th ed. Horwitz, USA.

Avila, I.M.L.B. and Silva, C.L.M. (1999). Modeling kinetics of thermal degradation of colour in peach puree. Journal of food engineering, 39(2):161-166.

Ertekin, C. and Yaldiz, O. (2004). Drying of eggplant and selection of a suitable thin-layer drying model. Journal of food engineering, 63:349-359.

Goyal, R . K .; Kingsly, A. R. P.; Manikantan, M. R. and Ilyas, S. M. (2006). Thin-layer drying kinetics of raw mango slices. Biosystems enginerring, 95(1):43-49.

Henderson, S. M. and Pabis, S. (1961). Grain drying theory I: temperature effect on drying coefficient. J. Agric. Eng. Res. 6(3): 169-174.

Lewis, W.K.(1921). The rate of drying solid materials. J. of Industrial Eng., 13 (5): 427-432.

Maskan, M. (2001). Kinetics of colour change of kiwifruits during hot air and microwave drying. Journal of food engineering, 48:169-175.

Page, G. (1949). Factors influencing the maximum rates of air drying shelled corn in thin layers. Unpublished M.Sc. Thesis, Purdue University, Lafayette, IN

Pott, I.; Neidhart, S.; Muhlbauer, W. and Carle, R. (2005). Quality improvement of non-sulphited mango slices by drying at high temperatures. Innovative food science and emerging technologies, 6: 412-419.

SPECIFICATIONS OF TUNNEL DEHYDRATORS

1.

TUNNEL DEHYDRATOR

Model TI.TD.2500

-Capacity 2500 Kg

-No.of trolleys 7 No. 375 kg/trolley

-No. of trays 462 5 kg/tray

-Dimensiond

L : 3 M

W : 2.56 M

H : 3.12 M

-Power 27 KW

-Drying time 10 -20 Hr

-Drying Temp. 60 – 120 °C

Fruits. Apple,Mango etc

2

TUNNEL DEHYDRATOR

Model TI.TD.200

-Capacity 200 Kg

-No.of trolleys 4 No.

-No. of trays 20

-Dimensiond

L : 15 ft

W : 5 ft

H : 8 ft

-Power 20 KW

-Drying time 10 -20 Hr

-Drying Temp. 60 – 120 °C

Fruits. Apple,Mango etc

3.

TUNNEL DEHYDRATOR
Model TLTD.500

-Capacity 500 Kg
-No.of trolleys 20 No.
-No. of trays 50
-Dimensiond
L : 34 ft
W : 5 ft
H : 8 ft
-Power 28 KW
-Drying time 10 -20 Hr
-Drying Temp. 60 – 120 °C

Fruits. Apple,Mango etc

DESIGNED BY
TECHNOLOGY INTERNATIONAL
FAISALABAD
PH.041-2695716/2695761 FAX.041-2695724

TUNNEL DRYER

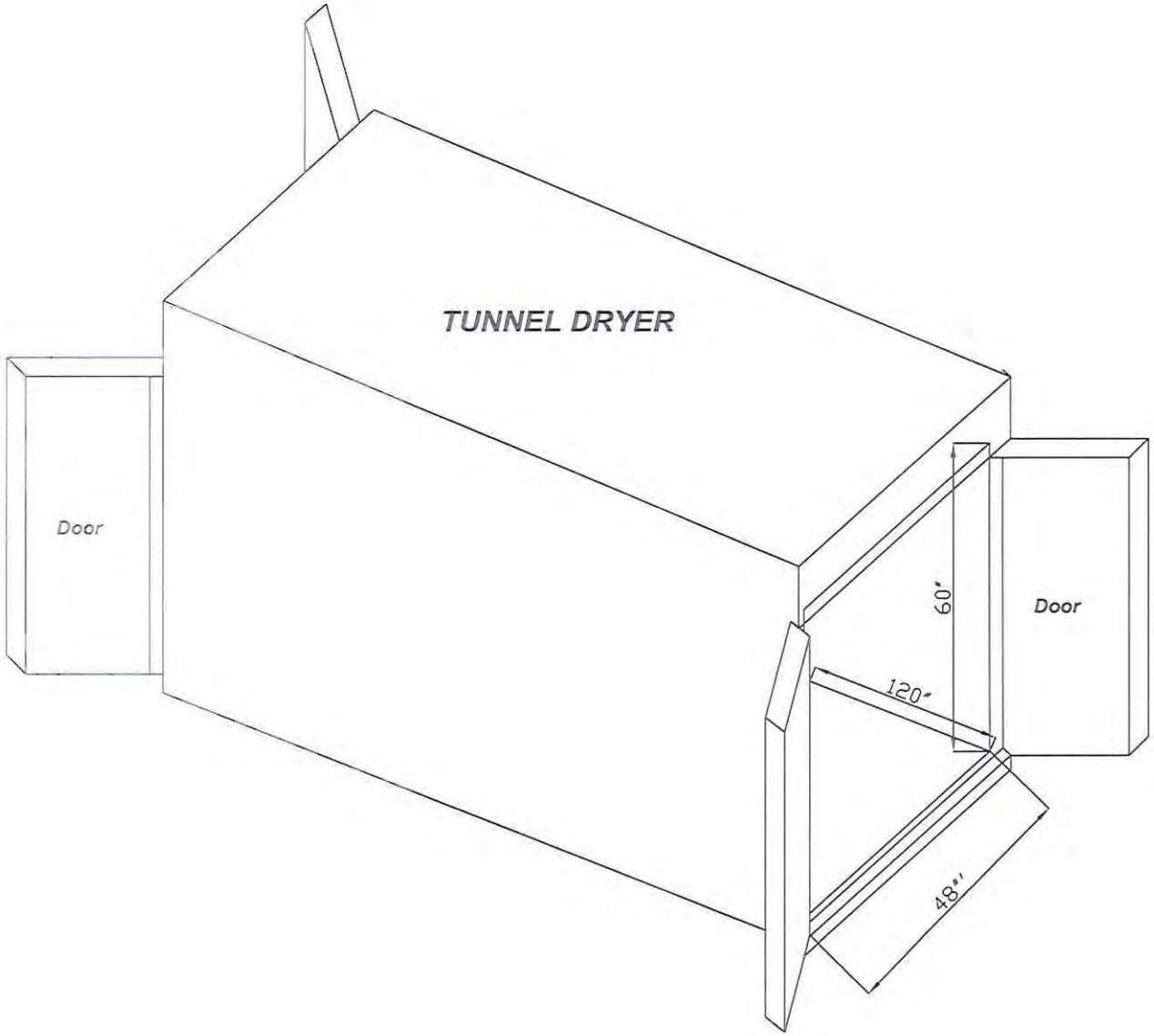

TROLLEY

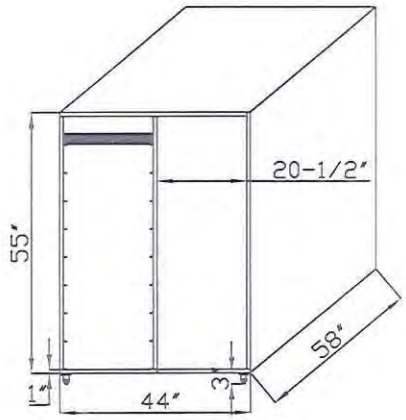

Chamber size ; W4' x H 5' x D 10
Outer size ; W 10' x H 10'-6" x D 6'-2"
Trolley size ; W 44" x H55' x D 58"
Number of Trolley = 02
Total Trays ; = 72 No.

DESIGNED BY
TECHNOLOGY INTERNATIONAL
FAISALABAD
PH.041-2695716/2695761 FAX.041-2695724

TUNNEL DRYER

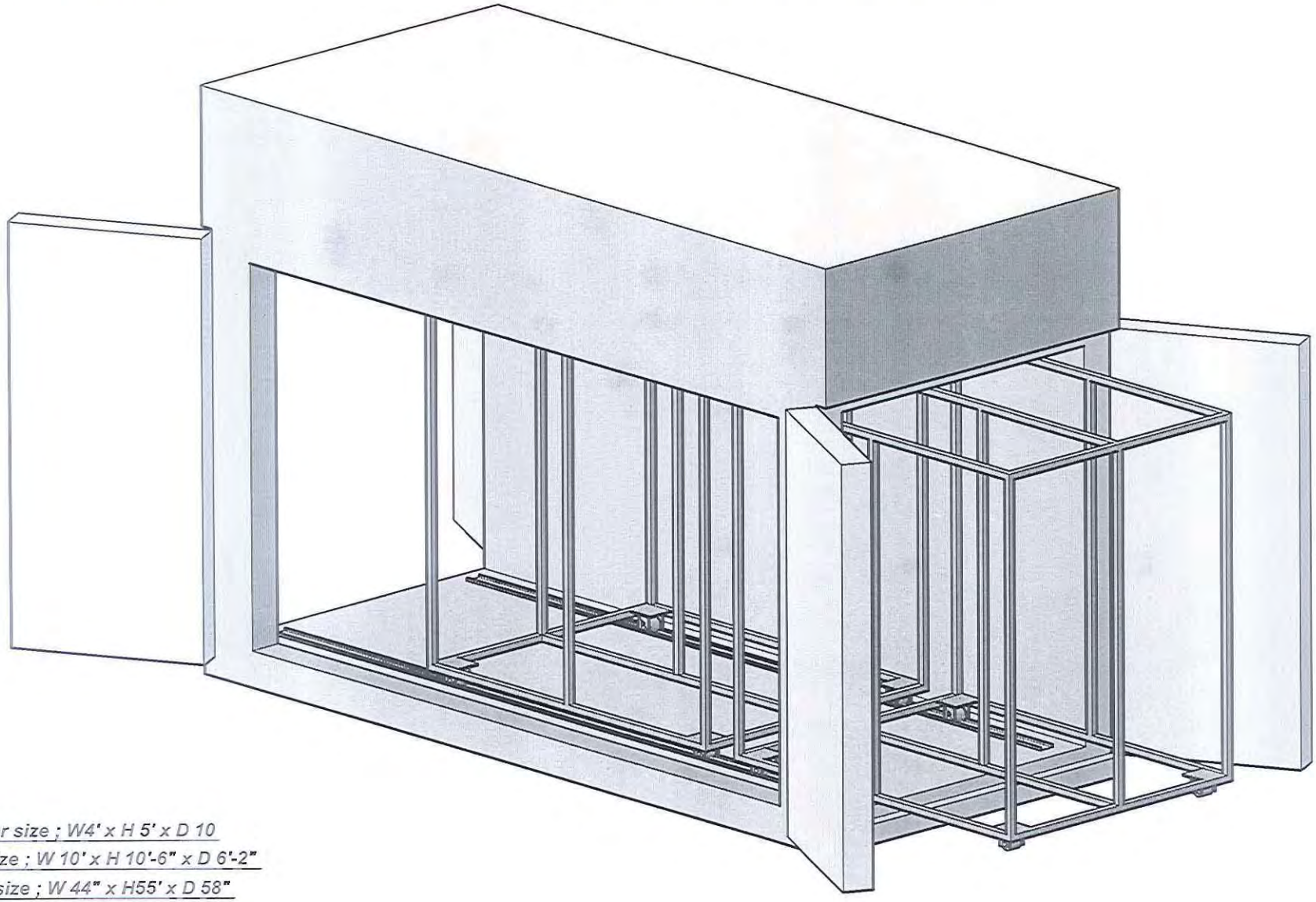

Chamber size ; W4' x H 5' x D 10
Outer size ; W 10' x H 10'-6" x D 6'-2"
Trolley size ; W 44" x H55' x D 58"
Number of Trolley = 02
Total Trays ; = 72 No.

DESIGNED BY
TECHNOLOGY INTERNATIONAL
FAISALABAD
PH.041-2695716/2695761 FAX,041-2695724

TUNNEL DRYER

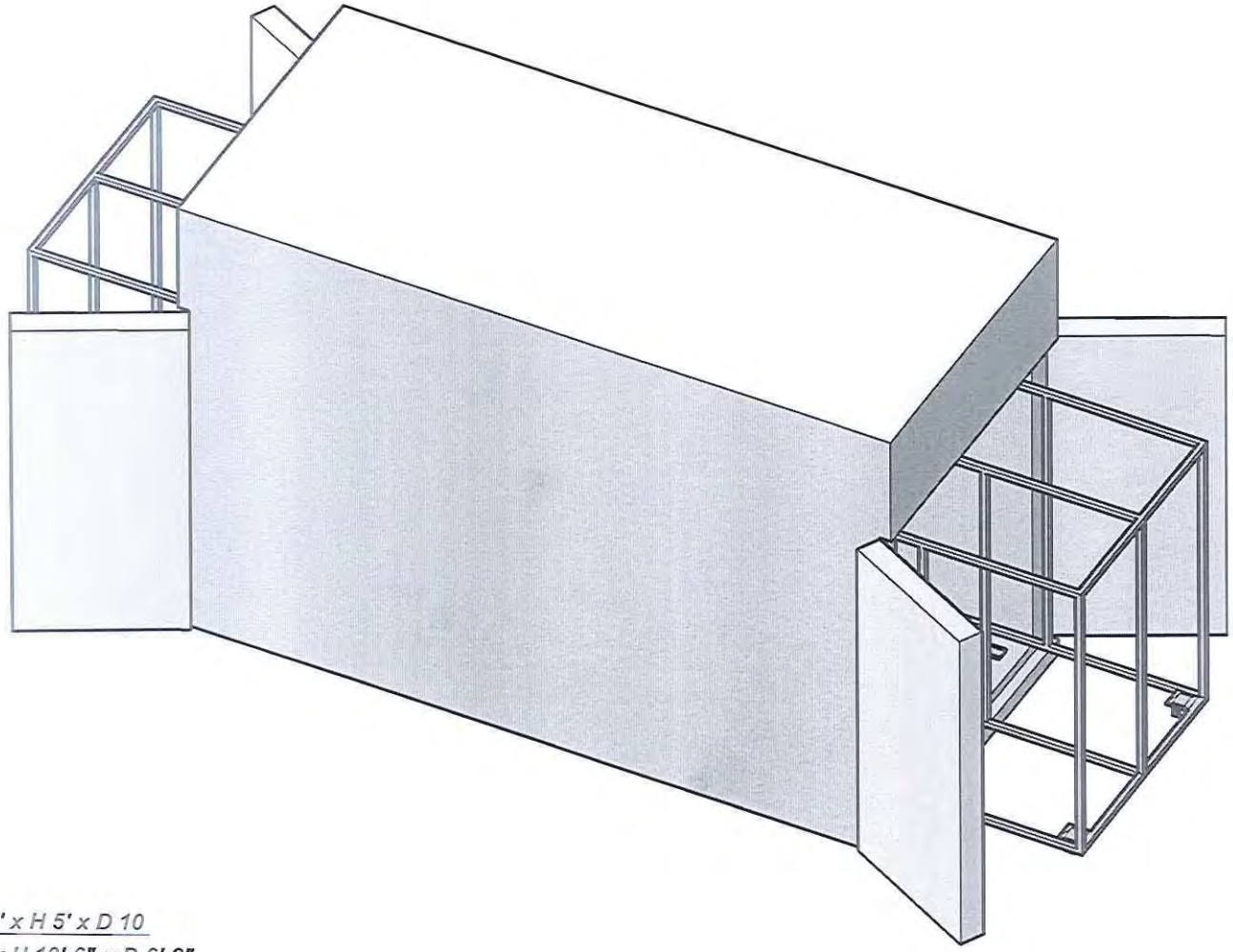

Chamber size ; W4' x H 5' x D 10
Outer size ; W 10' x H 10'-6" x D 6'-2"
Trolley size ; W 44" x H55' x D 58"
Number of Trolley = 02
Total Trays ; = 72 No.

DESIGNED BY
TECHNOLOGY INTERNATIONAL
FAISALABAD
PH.041-2695716/2695761 FAX.041-2695724

TUNNEL DRYER

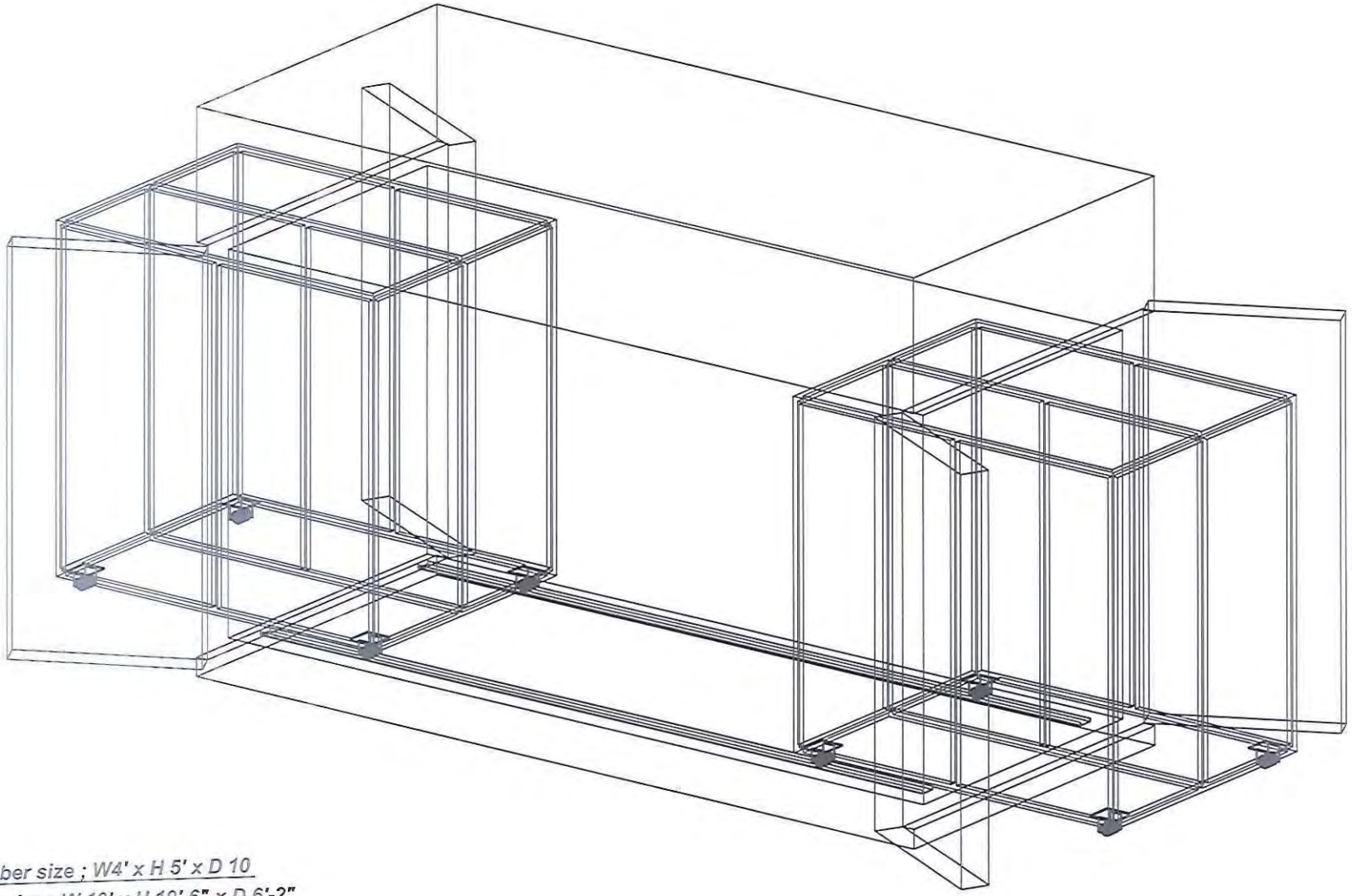

Chamber size ; W4' x H 5' x D 10
Outer size ; W 10' x H 10'-6" x D 6'-2"
Trolley size ; W 44" x H55' x D 58"
Number of Trolley = 02
Total Trays ; = 72 No.

SPECIFICATIONS OF CABINET DEYDRATOR AND OTHER DRYERS

CABINET HOT AIR DEHYDRATOR CABINET DRYER

FEATURES

- **Short dehydration times.**
- **Air flow adjustable**
- **Dustfree air supply in the chamber**
- **Automatic Exhaust.Automatic opening and Closing Machanism of shutters for the removal of Moisture.**
- **Sulphiting chamber built in for theFumigation of Chamber with Sulpher dioxide fumes.**
- **Display of Temperature and Humidity.**
-

TECHNICAL SPECIFICATIONS:

TEMPERATURE.

♦	Temperature range	: Amb. +5 to 150 °C.
♦	Temperature indication	: Thermostatic control of temp. With digital Display .
♦	Temperature accuracy	: ±1% of set value.

.AIR..

Air Flow	: 200 – 800 L.FT/Min
	: Variable and Adjustable
	: Flow indicator installed
Quality of Air	: Dust and particle free air .

♦	*CONSTRUCTION*	: **Triple walled body.**
♦	Inner chamber	: All Stainless Steel 304 L. Perforated.
♦	Milddle Wall	: Stainless Steel.
♦	Outer body	: It is also of Mild Steel.Powder coated.
♦	Tray supports	: Made of Stainless steel
♦	Insulation	: Insulation with high temp. Rock wool in order to save heat loss in the atmosphere and keep outer body cool

HUMIDITY

		: Digital display of Relative Humidity at front panel
♦	Gasket	: Door is sealed with high temp. silicon gasket.
♦	Blower Fan	: System is provided with fan air circulation. Circulation will be horizontal i.e. from

right to left. In this way uniform temp. can be obtained in the shortest possible time this will be of specially designed high temp. resistant.
Blower made of Stainless Steel.

- Timer : System has built in 9999 hour Digital timer Whole system is time controlled.
- Buzzer : A buzzer is sounded when set time period ends or Set Temperature is achieved.So that 2nd batch can be loaded and so on.
- Panel : All functions are controlled through front panel. It is fitted with actual temperature indication. Power ON/OFF. Temp. Regulator & Timer. buzzer.Humidity display.
- Power/Fuel : Gas operated.Installed with Heavy duty burners
  : Single phase .220 V.50 HZ
- Trolley system 4 No : Provided with mobile trolley system.
  : 4 No. Fitted with Heavy duty wheels and Railing in the Chamber.
  Material : Stainless Steel 304 L.

Trays : Size 24 x 30 Inches.
:Total No. of Trays 133 No.
:No.of trays Per trolley 33 34
:Material Stainless Steel. Perforated.

- Blowers : Heavy duty Stainless Steel.
- Filters : Polyurethane .0.5 Micron.
- Automation : Automatic control of Temperature and Humidity and Air .System is Programmable

ORDERING INFORMATION

CABINET HOT AIR DEHYDRATOR. Rs.31,75,000/-

CABINET DRYER.
MODEL: TI-CD-11.1000
With Temp.control.Air flow
And Humidity.Automatic.
Supplied with 133 S.S Trays

Capacity	: 1000 Kg. 1 Ton..
Chamber Dimension:	
W x H x D (Inches)	: 9 x 8 x 11.
No.of Trolleys	: 4-Nos.
Power	: 220 V. 50 Hz.Gas operated

DESIGNED BY
TECHNOLOGY INTERNATIONAL
FAISALABAD
PH.041-2695716/2695761 FAX.041-2695724

CABINET DRYER

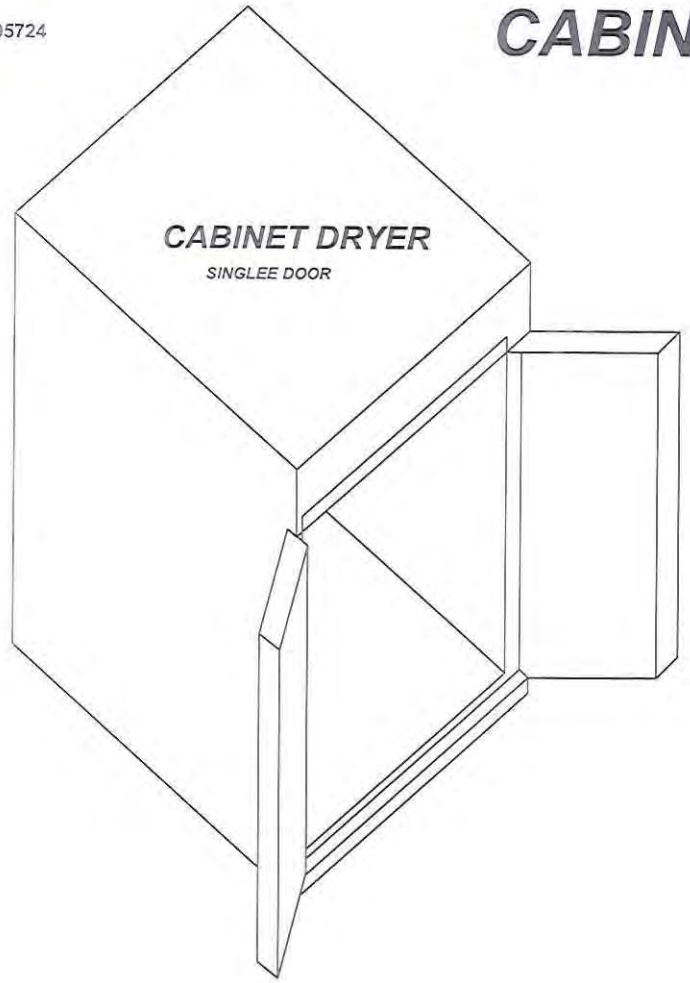

TROLLEY

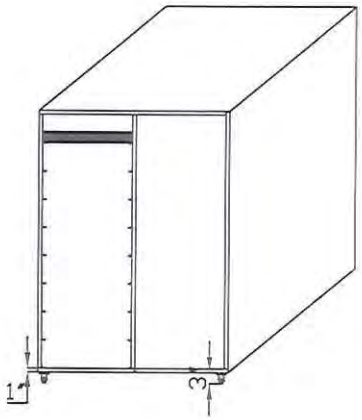

TRAY

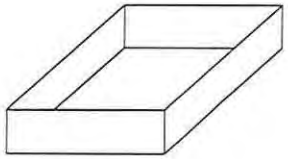

Total Vegetable ;Capesity Per Batch = 1000 Kgs

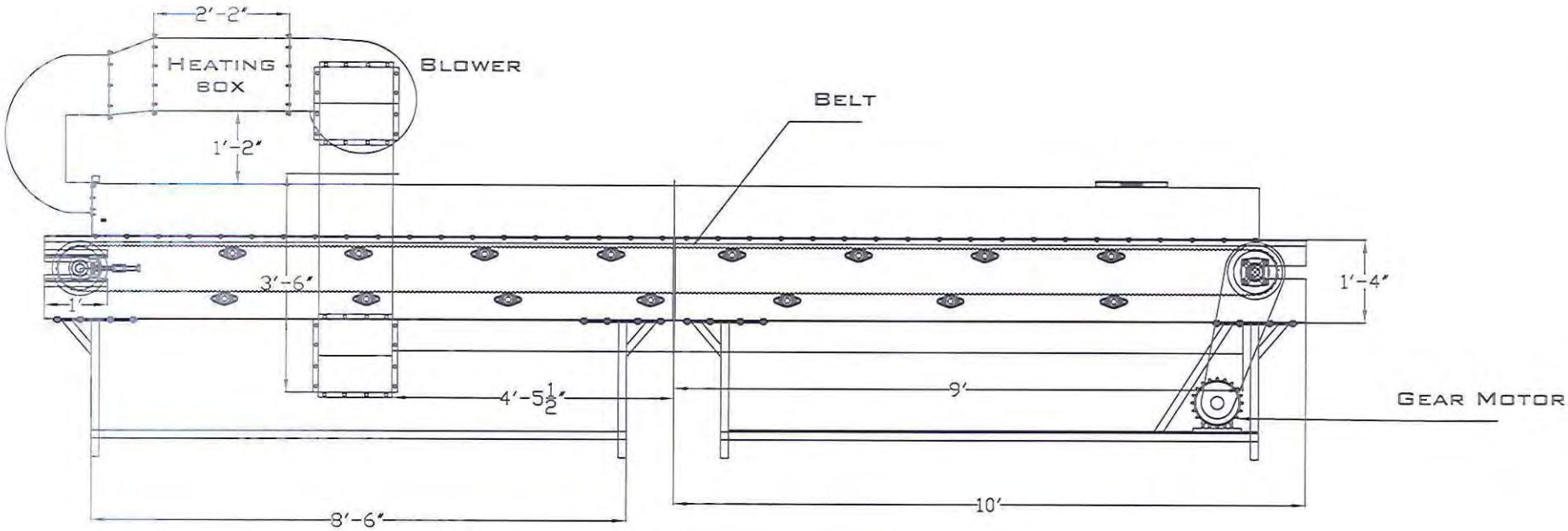

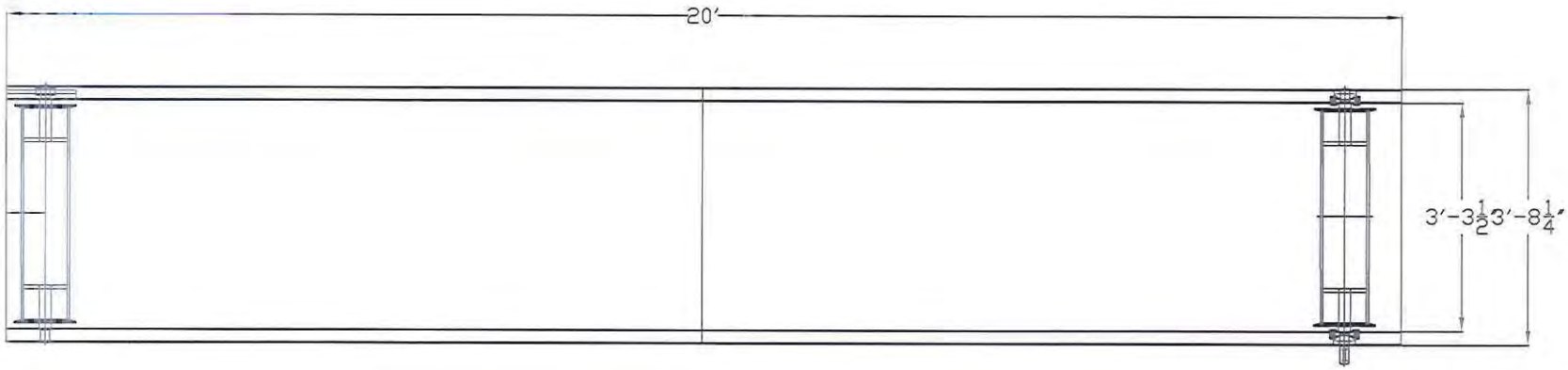

Drawn by	Faiz-Ur-Rehman	Date	03/03/2011	Sig.	
Checked by		Date	/ /	Sig.	
Drawing No. ;					
Scale					

CONTINUEOUS BELT DRYER

TECHNOLOGY INTERNATIONAL PAKISTAN
Ph; 041-2695716 / 2695761 Fax; 041-2695724

FRUIT CANDY PLANT

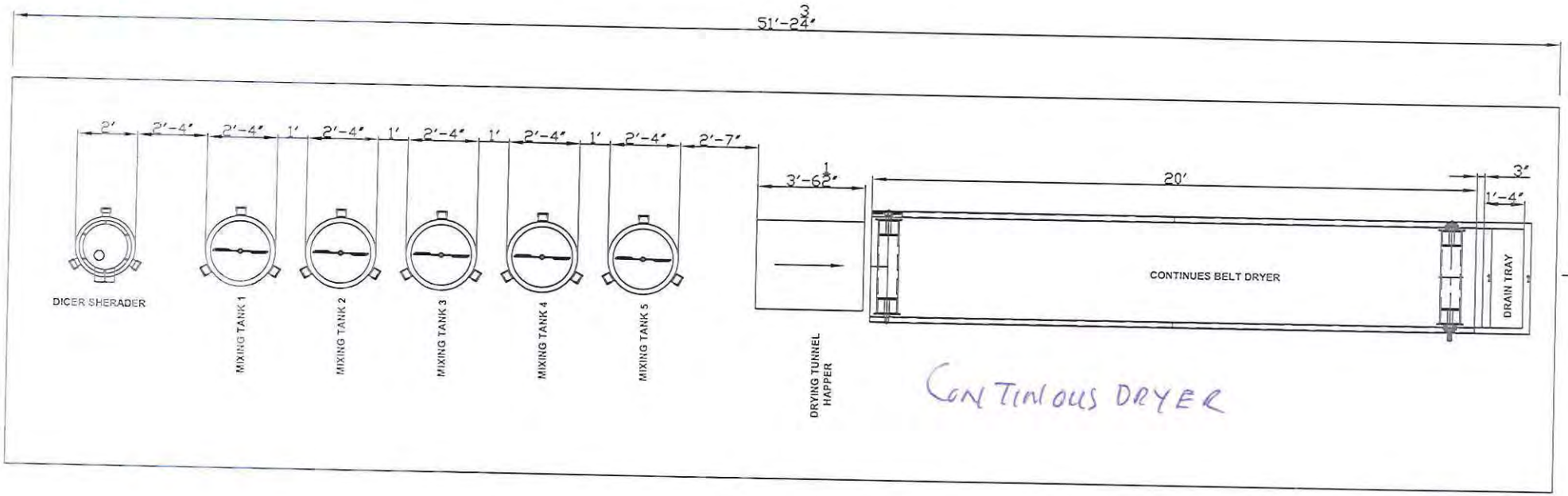

Drawn by	Faiz-Ur-Rehman.	Date	03/ 03 / 2011	Sig.	
Checked by	Ajaz Hussain Syed	Date	/ /	Sig.	
Drawing No.1		FRUIT CANDY			
Scale;					

FLOW DIAGRAM

TECHNOLOGY INTERNATIONAL

Ph ; 041-2695716 / 2695761

PRACTICAL ACTION
Technology challenging poverty

technical guide

A Guide for the Construction of the

DRY IT

SEMI - CONTINUOUS TRAY DRIER

By

B L Axtell & A J Jones

DRYIT – Semi Continuous Tray Drier

Preface

This manual is intended to assist engineering workshops that wish to construct a semi-continuous tray drier based on Practical Action's design.

Practical Action has found that this drying system conveniently fills a gap between solar (and assisted solar) dryers. These have a low throughput and are only suited to certain climates. The larger industrial equipment is being used in seven developing countries drying a diverse range of materials and Practical Action is currently pursuing a programme of greater dissemination in Latin America.

Construction plans are available from Practical Action and have been successfully used both in the UK and abroad. In some cases, however, workshops have had some difficulties, and so it was thought appropriate to also develop a step-by-step manual to guide engineers through the construction process.

The drier consists of a cabinet of trays, trays contain material to be dried, and the whole system is connected to a thermostatically controlled heat source. Most commonly the materials to be dried, are herbs, fruits or vegetables. However, the tray drier has also been used to dry colouring materials and textiles.

It is hoped that this manual is helpful for construction and Practical Action welcome comments or suggestions in regard to this manual. Drawings for a smaller tray drier (batch drier) and a case study book are now available.

B L Axtell and A J Jones originally prepared this manual in 1995, it was revised in January 2004. If you require further information you can contact:

Practical Action
The Schumacher Centre for Technology and Development
Bourton-on-Dunsmore
Rugby
Warwickshire
CV23 9QZ
United Kingdom
T +44 (0)1926 634400
F +44 (0)1926 634401
E infoserv@practicalaction.org.uk

Or visit the Practical Action website at www.practicalaction.org to see what other projects Practical Action works on.

Practical Action (formally known as The Intermediate Technology Development Group) was founded by the late Dr. E.F.Schumacher. Practical Action enables people in the Third World to develop using technologies and methods, which give them more control over their lives and which also, contribute to the long-term development of their communities.

technical guide

Check List

Fingers move smoothly together fully up and down.
Tray width = distance between fingers at lowest position minus 2 mm,
Doors open and close easily.
Tray lifting point reinforcements are recessed or ramped.
Tray dividers are approximately 20mm lower than tray outside walls.
Base, drying cabinet and doors are painted (no lead paint!) before cladding is fixed on.
All angle irons used are straight and square.
Washers and locking nuts are used in the lifting mechanism.
Any glue used is waterproof.

Tools

The following tools will be needed to make the Practical Action tray drier:

Tape Measure	Hacksaw	Arc Welder	File
Straight Edge	'G' Clamps	Hammer	Plane or rasp
Set Square	Locking Pliers	Spanners	Pencil
Spirit Level	Vice	Power Drill	
Scriber	Centre Punch	Drill Bits	
Cross Cut Saw	Chisel	Tennen saw	

An angle grinder may be needed (where suggested)

Contents **Page**

Glossary 1

Introduction 2

Description 3

Construction

General Assembly

Operation and Maintenance Heating

Glossary

MS -	mild steel
Hx. Hd.-	hexagon headed
St./St.-	steel
OD -	outside diameter
CSK -	Countersunk head
RD -	Dome headed (wood screw)

technical guide

Important Notice to Constructors

This manual is intended to be used with Practical Action's engineering drawings TD001 to TD102.These are available on the website to down load electronically, alternatively you can contact Practical Action and have them sent on electronically or on paper.

Most of the drier is made from mild steel angle, which should be as straight, flat and square as possible. The drier should be built on a horizontal, flat floor; otherwise fitting the trays will be very difficult.

Particular care must be given to ensuring parts are correctly positioned before they are welded.

Where materials are not available in the sizes specified in the manual and drawings, give serious thought to how substitution with material of a different size will affect the function of that part of the machine:

- Will this substitution alter other dimensions?
- Will the change weaken the finished machine?
- Will it make the machine less durable?

It is usually better to use a larger steel section than a smaller one.

Components, which slide together, should not be painted on the sliding surfaces but should be oiled as the unit is assembled.

Lead paint must not be used to paint any part of the drier, being a toxic substance it could contaminate food being dried.

On page 3 of this manual is a checklist, which should be read before and after completing the drier.

Introduction

This manual is designed primarily to aid the construction of the Practical Action Semi-continuous Tray Drier.

The machine is described in detail and its construction outlined.

This manual compliments the engineering drawings TD001 to TD102, which are essential if a drier is to be made.

The manual does not cover the heat source and ducting required for a complete drier, but this is discussed briefly.

The drier consists of a cabinet containing a stack of 15 trays, which hold the material to be dried. The cabinet is mounted on a base and has a lifting mechanism, (to lower/ lift the trays). This mechanism is mounted on a frame over the drying cabinet.

Semi-continuous operation is achieved by the use of the lifting mechanism. The mechanism allows a tray of dried product to be removed and replaced by one with fresh material, without interruption of the drying process. The drier is made from mild steel angle, plywood, steel plate and bar, and a small amount of hardwood for bearings. The trays are made of hardwood with nylon mesh bases and mild steel angle rein-forcers.

In this manual the drier has been divided into seven main areas. These are:

1.) The base
2.) The upper frame
3.) The drying cabinet
4.) The lifting mechanism
5.) The trays
6.) The cladding
7.) The drying cabinet doors

Areas 1 to 4 are shown in the exploded *diagram,* figure 1.

technical guide

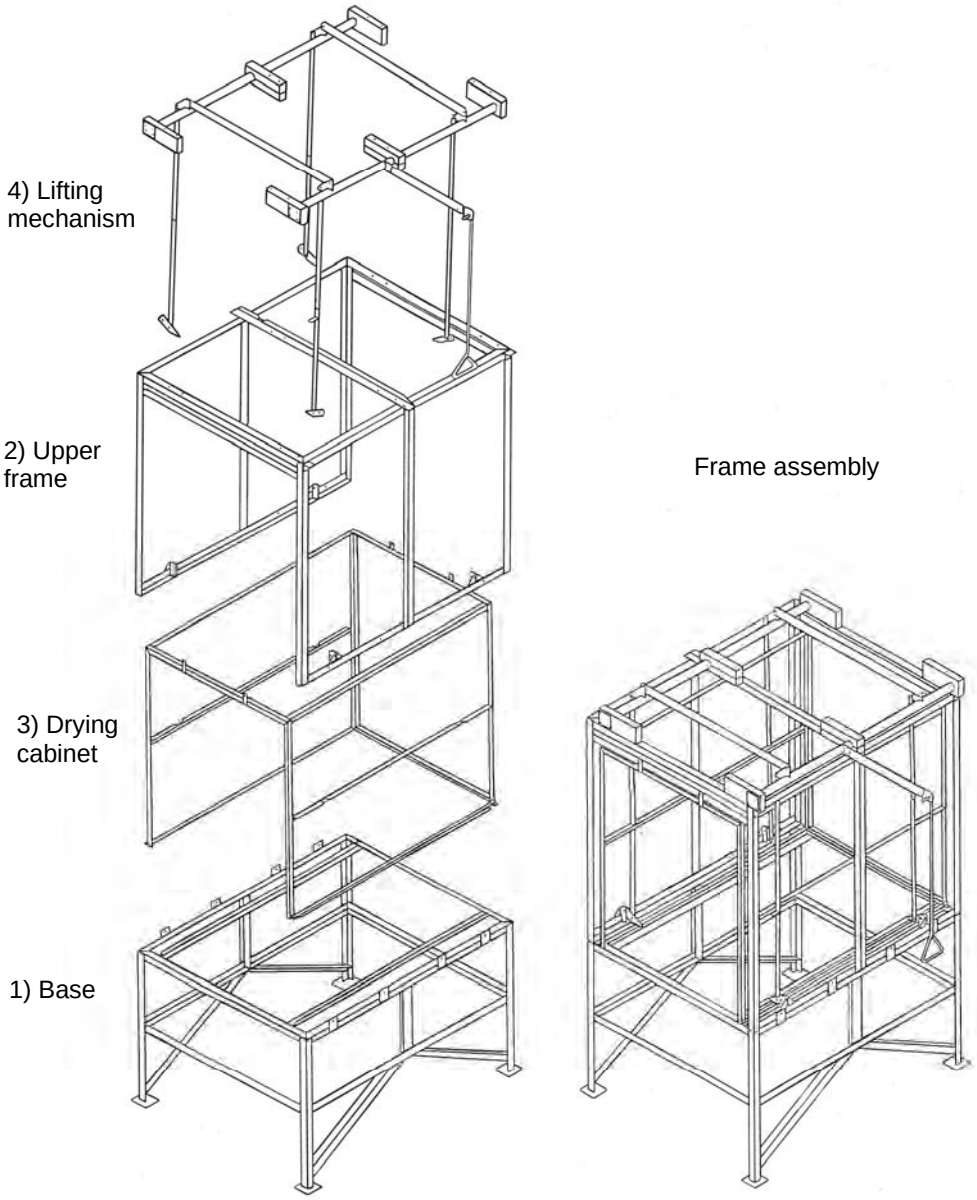

Figure 1: base, upper frame, drying cabinet and lifting/ mechanism

technical guide

The trays, cladding and doors are shown in the position on the completed drier in figure 2.

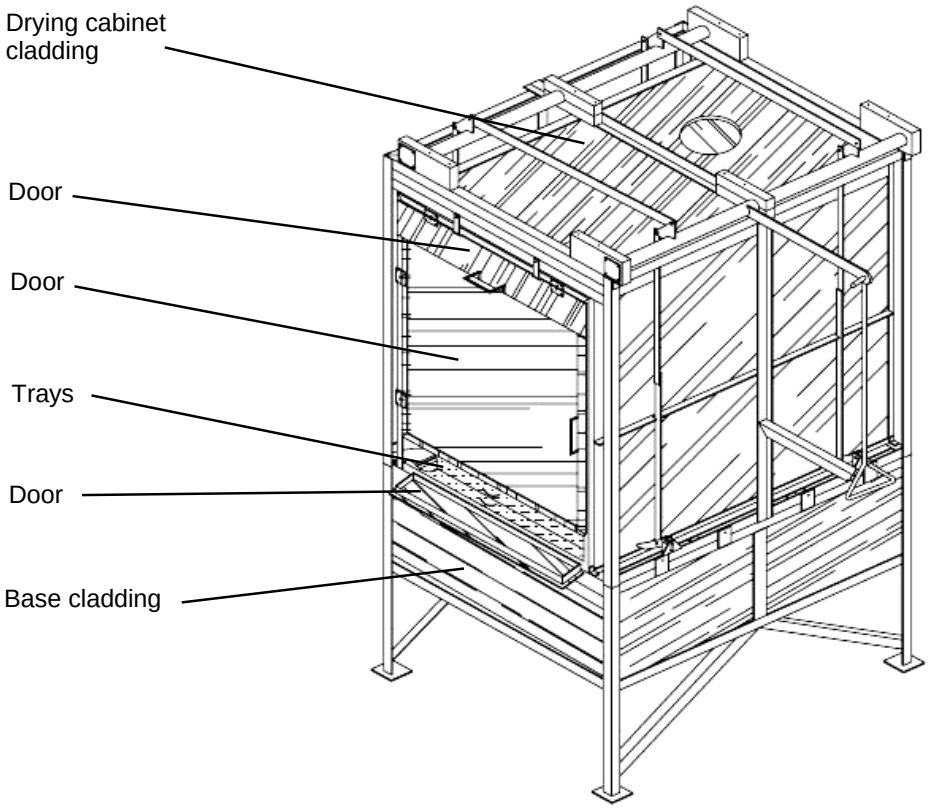

Figure 2: Cladding trays and doors

Construction Of Tray Drier

This section describes each major component together with a possible construction procedure.

Base Frame

See drawing TD001

The base is made from mild steel angle, steel bar and steel plate. It consists of two rectangles, 1110 x 1420 mm with four legs welded on the outside at the corners, bracing, feet and two tray supports.

Mild steel angle is usually manufactured with a radius on the inside corner. Therefore, for the legs to fit closely to the rectangles' outside corners, the corners must not be sharp. A way to avoid sharp corners is to use 'snub' ends, as shown in figure 4.

technical guide

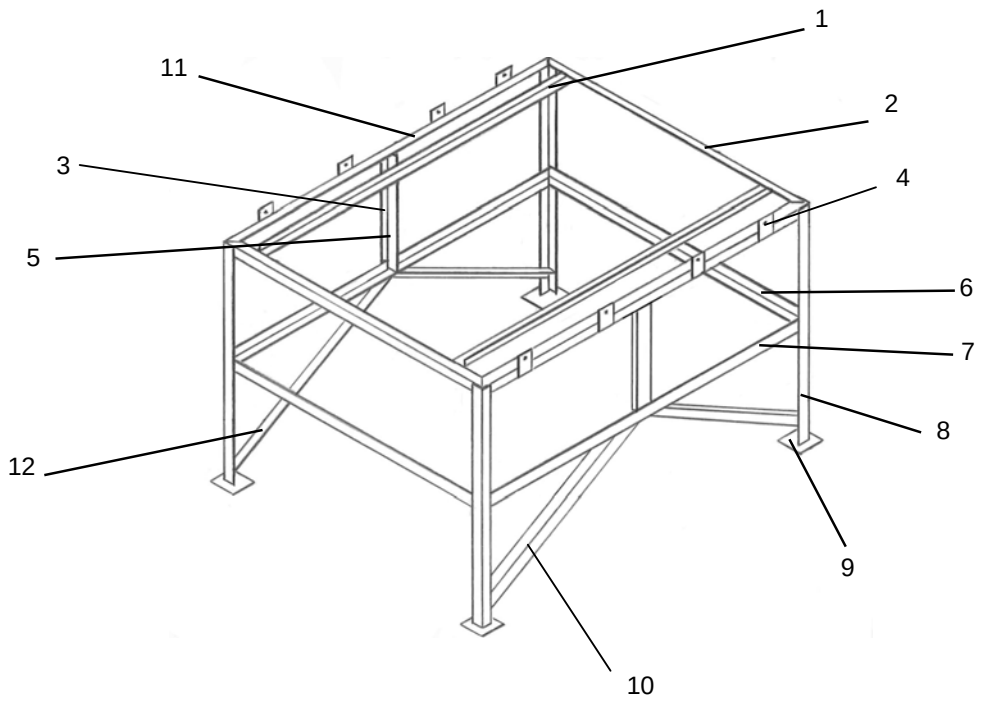

Figure 3: Base Frame

Part	Name	Qty	Dimensions	
1	Tray Support	2	40 x 40 x 6 x 1340	Long MS Angle
2	Top Beam	2	40 x 40 x 6 x 1098	Long MS Angle
3	Strap	2	6 x 60 st.bar x 1340	Long
4	Pad	8	64 (approx.) x 6 St. bar x 80	Long
5	Rib	2	60 x 50 st.bar x 441	Long
6	Bottom Beam	2	40 x 40 x 6 x 1098	Long MS Angle
7	Bottom Beam	2	40 x 40 x 6 x 1408	Long MS Angle
8	Leg	4	40 x 40 x 6 x 909	Long MS Angle
9	Foot	4	40 x 40x 6 st.plate	
10	LH Cross Tie	2	40 x 40 x 6 x 780	Long MS Angle
11	Top Beam	2	40 x 40 x 6 x 1408	Long MS Angle
12	RH Cross Tie	2	10 x 40 x 6 x 780	Long MS Angle

If snub ends are not used on the top and bottom beams', therefor lengths must be increased by 12 mm each, and the sharp corners ground off after the rectangles have been welded up.

Construction

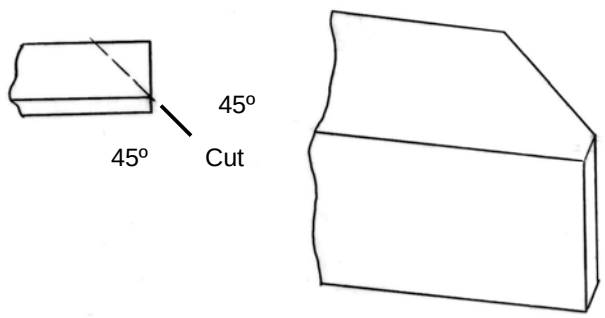

Figure 4: snub ends

1) Cut beams to length, with snub ends, as shown in figure 4.

2) Tack weld two long beams and two short beams together to form a 1420 x 1110 mm rectangle. Ensure the rectangle is flat and square (for flatness use flat surface or eye; for squareness equal diagonals) then fully weld. Repeat this with the bottom beams.

3) Cut four legs to size, clamp and weld a leg to each corner of the top rectangle ensuring each is set square to, and flush with, the top edge of the angle iron (see figure 5).

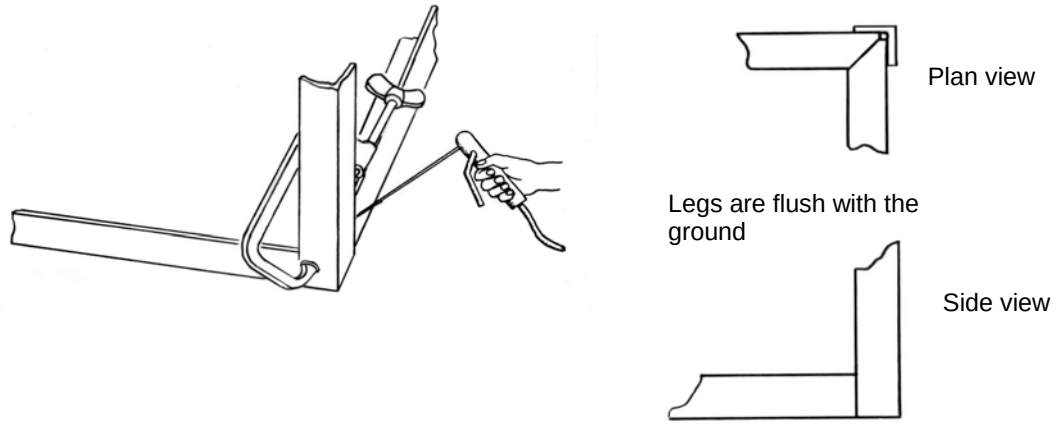

Figure 5: legs to corners

4) Clamp the lower rectangle in position and weld to the legs.

5) Cut the strap, ribs, cross ties, tray supports, pads and feet to size, drill the pad holes and weld them to the long top beams in the positions shown in engineering drawing TD 001.

Note that the tray supports are made from 50 x 25 x 6 mm angle. If this is not available, 25 x 25 x 6 mm or 50 x 50 x 6 mm mild steel angle can be modified accordingly. Also 3 and 5 form a 'T' piece, which would be replaced by two lengths of angle back to back.

6.) Mark the positions of the 4 x 8mm diameter (MB) holes (see TD 001) used for locating the tray compartment on the base but DO NOT drill them.

II Tray Compartment

The tray compartment is made entirely from 25 x 25 x 6 MS angle to drawing TD003

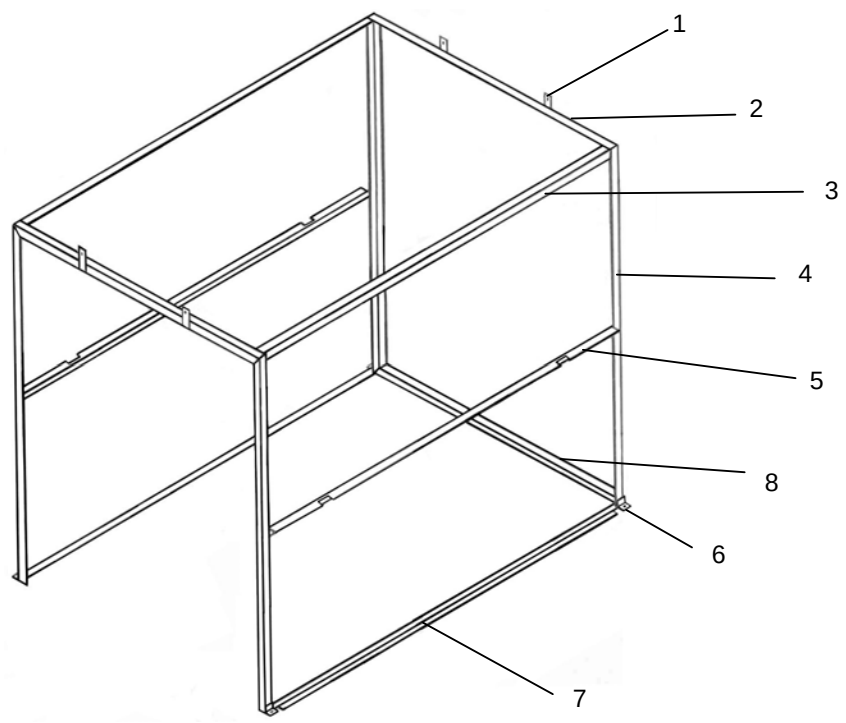

Figure 6: Tray Compartment

Part	Name	Qty	Dimension	
1	Pad	4	25 x 70 x 6 THK.MS	Flat
2	Top beam	2	25 x 25 x 6 MS angle x 942	Long
3	Top beam	2	25 x 25 x 6 MS angle x 1370	Long
4	Leg	4	25 x 25 x 6 MS angle x 1225	Long
5	Centre beam	2	25 x 25 x 6 MS angle x 1370	Long
6	Angle pad	4	25 x 25 x 6 MS angle x 25	Long
7	Bottom beam	2	25 x 25 x 6 MS angle x 1370	Long
8	Bottom beam	1	25 x 25 x 6 MS angle x 942	Long

Construction

1) Cut each part from 25 x 25 mild steel angle. The cutaways in the centre beams are for the rods connected to the lifting fingers.

2) Weld the two back legs (4) and the back top and bottom beams (2, 8) to form a flat, square rectangle with mitre joints at each corner. Weld the two front legs (4) to the front top beam to from a square, flat goal post arrangement with two mitre joints.

3) Parts 3, 5 and 7 are butt jointed to the rectangle and goal posts. Butt joints are used fr flush fitting cladding.

A detail of the mitre and butt joints are shown in figure 7

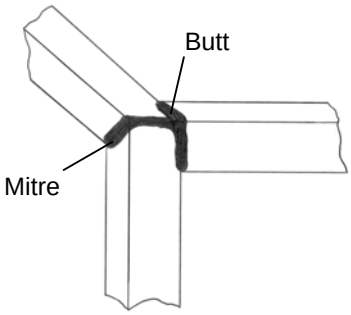

Figure 7: Mitre and butt joints

4) Weld the lower beams (7) tot the bottom of the legs as shown in figure 8

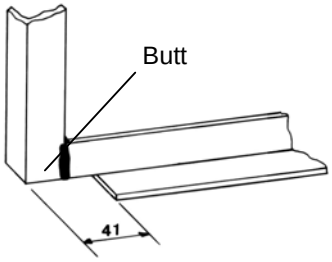

Figure 8: lower beam-ends are flush

5) Drill the angle pads then weld them in position, flush with the bottom of legs, as shown in figure

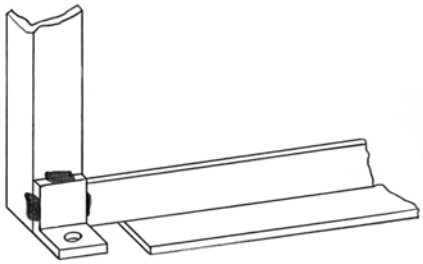

Figure 9: Angle pads
6) Mark and drill the upper pads then weld to the frame, in the position shown in TD003

Upper Frame

The upper frame supports the lifting mechanism and is made almost entirely from 40 x 40 x 6 mild steel angle.

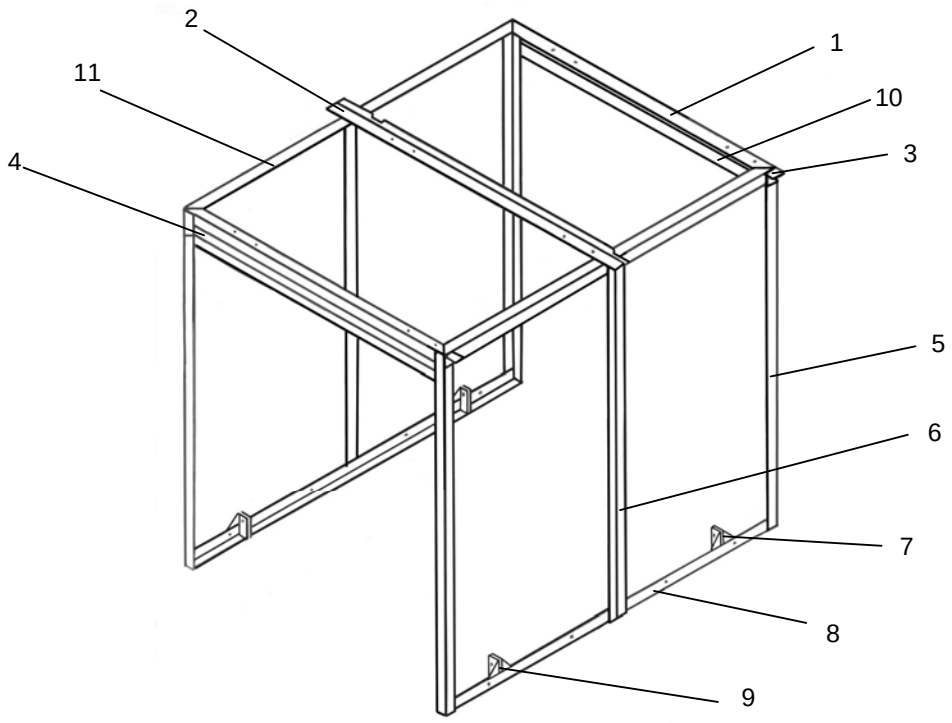

Figure 10: Upper frame

Part	Name	Qty	Dimensions (mm)
1	Short beam	2	40x40x6 MS Angle x 6548 long
2	Centre beam	1	40x40x6 MS Angle x 1150 long
3	Bearing block support	2	40x40x6 MS Angle x 40 long
4	Front centre support	1	40x40x6 MS Angle x 1098 long
5	Leg	4	40x40x6 MS Angle x 1350 long
6	Centre Legs (LHS & RHS)	2	40x40x6 MS Angle x 1350 long
7	Right finger support	4	40x40x6 MS Angle x 90 long
8	Bottom beam	2	40x40x6 MS Angle x 1110 long
9	Left finger support	4	40x40x6 MS Angle x 90 long
10	Top beam	2	40x40x6 MS Angle x 1408 long
11	Rear centre support	2	40x40x6 MS Angle x 1122 long

Construction

The upper frame can be divided into 3 sub assemblies – the top rectangle and two sides – and the following construction procedure can be used:

1) Cut the top beams (1 and 10) with snub ends (see figure 4, base)

2) Weld the rectangle (overall dimensions 1110 x 1420 mm)

3) Cut out and drill the finger supports (see TD002) and then weld them to the two bottom beams, as shown in figure 11. Minimise distortion by restraining the lower beam (with vice, clamp etc) during welding and cooling and by keeping the weld material uiaed to a minimum. Note that weld is not applied to the underside of the over hang. This area must be clear, for positioning of the base joining pads.

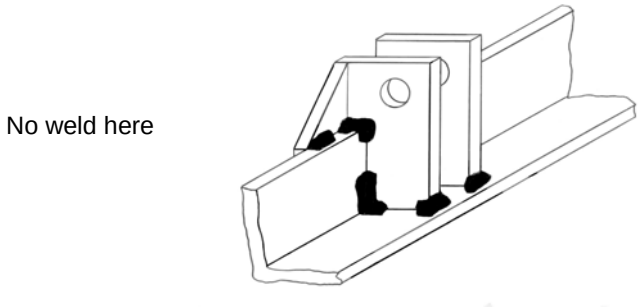

Figure 11: Finger supports

CORRECT POSITIONING OF THE SUPPORTS IS ESSENTIAL FOR CORRECT FUNCTIONING OF THE LIFTING FINGERS. THE POSITIONING AND DIMNENSIONS OF ALL MEMEMBERS ARE GIVEN IN TD 002.

4) Chamfer the ends of the lower beams to achieve a square, flush fit with the legs, as shown in figure 12.

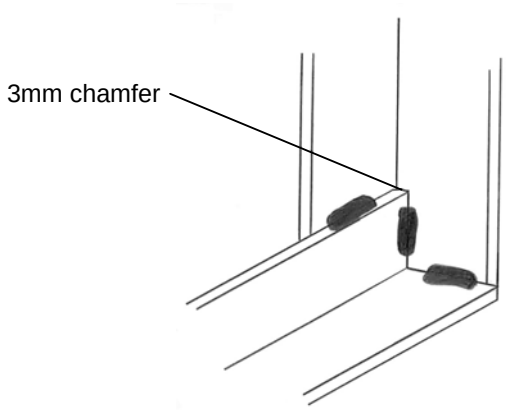

Figure 12: Chamfered end to lower beam

5) Weld two legs to each bottom beam, ensuring they are square

Now assemble these with the rectangle and add the centre beam, centre supports, centre legs and bearing block supports. Do not weld on the top side of the bearing supports as the bearing must sit flat. Note: the cut-outs in the centre beam are for the bearing shafts. Take care to ensure the frame is square and vertical before full welding.

DO NOT drill any holes apart from those in the finger supports at this stage. The hole positions shown in the drawing TD002 are theoretical and are actually located by marking through holes in other assemblies, as described in General Assembly

Lifting Mechanism

The lifting mechanism is the most critical part of the drier. It is mounted on the upper frame and enables the user to lift all the trays above the bottom one. This tray is then removed and the user drops the other trays down using the mechanism.

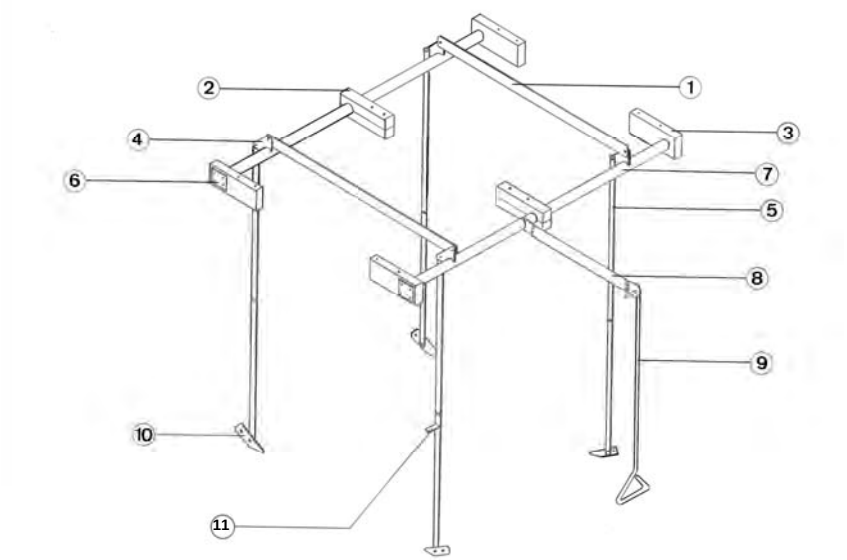

Figure 13: Lifting mechanism

Part	Name	Qty	Dimensions	DRG
1	Link	2	6 x 50 x 1030 long	TD006
2	Split bearing	2	250 x 40 x 96	TD010
3	Plain bearing	4	250 x 40 x 100	TD010
4	Cam	4	150 x 130 x 6 plate	TD014
5	Tie rod half	8	25 x 6 x 700 long	TD005
6	End plate	4	80 x 80 x 6	TD011
7	Bearing shaft	2	OD 42 x 5 x 1415	TD007
8	Operating lever	1	OD 42 x 5 x 620	TD008
9	Lever ext.	1	OD 16 x 1500	TD009
10	Lift finger	4	135 x 40 x 8	TD004
11	Stop bar	1	25 x 30 x 6	TD005
12	Handle hook	1	40 x 40 x 6 x 1300	TD017

Notes: The dimensions listed are overall dimensions of the material from which each component is manufactured.

12) The handle hook is not shown in figure 13

Construction

1.) Link

The two links, which connect the bearing shafts (via cams), are drilled and cut according to drawing TD 006.

2.) Split Bearings

The split bearings should be made from oil impregnated hardwood. For a circular-bearing surface it is necessary to drill the large hole after the two halves have been made, see drawing TD010.

Saw and plane each bearing block to size, clamp the halves together and then drill the 42 mm diameter bearing hole and 8 mm fixing holes.
Chamfer one edge for flush fitting to the top centre beam, 2.

3) Plain Bearing

Make to drawing from oil impregnated hardwood (TD 010)

4) Cams

The four cams convert the rotational movement of the bearing shafts to horizontal and vertical movement. It is important that these items are manufactured accurately to the drawing (TD 014).

5) Tie Rods

Each tie rod is made from two bars. Cut and drill these according to the TD 005 drawing. These are assembled in conjunction with the rest of the lifting mechanism as described in the general Assembly section.

6) Bearing End Plates

Make according to drawing TD011

7) Bearing Shafts

Make according to drawing TD 007 Note that the shafts' ends should be flat and square for smooth operation.

8) Operating Lever

This is made from similar tube to the bearing shafts. Once cut, each end is flattened and holes cut or drilled.

9) Operating lever extension and handle

This is cut and bent before the thread is cut according to the drawing. TD 009. The bends are made using a hammer and anvil/vice. Localised heating of the bar at the bends is recommended.

10) Fingers

For effective functioning the fingers need to have the same profile. To achieve this the manufacturing note on the engineering drawing (TD 004) must be followed.

11) Stop bar

The stop bar is cut according to the drawing and welded to the tie rods during assembly of the lifting mechanism. (See drawing TD 009).

12) Handle hook

Cut the MS angle and weld up according to the engineering/drawing.
In the assembly of the lifting gear various nuts and bolts are used. This are listed below and sketches of the fixing configurations given.

Name	Purpose	Qty	Dimensions and spec
Bolt	Connecting Finger-tie rod -cam/link	16	M12 x 40 Hx HG. St
Plain Washer	Use with above	44	Standard for M12
Locking Nut	Use with above	16	M12 Hx Hd. St
Locking Nut	For lever extension Fixing brg. blocks	1	M16 Hx. Hd. St
Bolt	Fixing brg. blocks	12	MS x 120 Hx Hd. St
Plain Nut	Fixing brg. blocks	12	MS Hx.
Plain Washer	Fixing brg. blocks	12	Standard for MS

Nuts bolts and washers –layout

1. Finger to finger support on upper frame

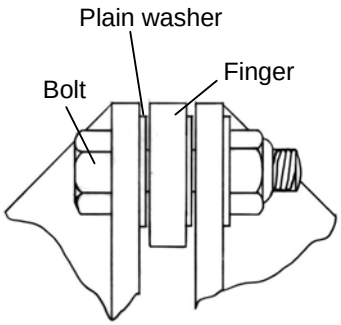

Figure 14: finger in support

2. Finger to tie rod.

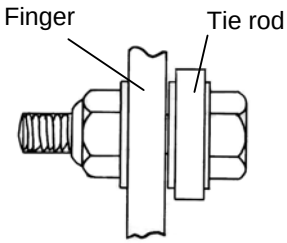

Figure 15: finger/tie rod

The tie rod/cam and cam/link connections are the same as that for the finger/tie rod.

Trays

The parts list for a tray is given on the engineering drawing TD 015.

The basic requirement of each tray is that it holds the material to be dried without damaging it whilst allowing maximum airflow through it. Also the tray should be, durable, cheap, easy to make, using locally available materials.

The trays are constructed of wood and each one has six sections: four with a mesh base and two open at one end. By positioning the open ends alternately in the stack of trays, the air is able to flow in a zigzag manner up through the stack.

To allow horizontal airflow in the tray stack (see figure 28) the internal partitions (dividers) must be approximately 20 mm lower than the outside walls of a tray.

For correct operation the overall width (to outside of corner reinforcers) of the trays must be 1 -2 mm less than the distance between the tips of the lifting fingers when they are at their lowest point.

Corner reinforcements at the lifting points protect the tray from being damaged by the lifting fingers. In the standard design these reinforcements protrude from the tray side, and tend to catch on the tray guides during batch unloading and loading. The design of the tray guides means that this is not a problem during normal operation.

To overcome this, the angle can be recessed, or fillets can be put in to 'ramp' the protrusions as shown in figure 16.

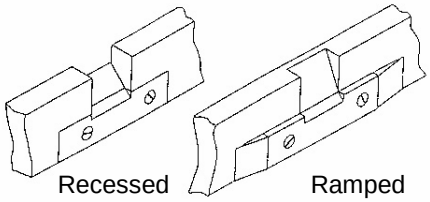

Figure 16: recessed and ramped

If the reinforcers are recessed care must be taken to increase the timber frame width and alter the cutaways.

If ramps are used they must be well fastened to the tray, e.g. pinned and glued, using waterproof glue.

The ends of the trays, which have the small, open compartments, should be clearly marked to avoid confusion. When operating the drier ensure that the trays are alternately positioned in the cabinet. This is best done by painting all these ends in colour so that when fully loaded the stack of trays will alternate -painted, unpainted, painted, unpainted. This will then facilitate zigzag airflow.

Bottom Tray Removal

This is a potentially dangerous operation. Never remove the bottom tray by hand. Always use some device. The most common one in use is a metal crook {see operation and maintenance).

Construction

1.) Cut, plane and sand wooden members according to drawing TD015. Note:
   (i) cutaways are different if corner reinforcements are recessed
   (ii) Internal partitions (dividers) are 19mm lower than outside wall

2.) Screw and glue the frame together, using water resistant glue

3.) Place the nylon gauze over the drying compartments and fix in position with the plywood (exterior grade) sandwich strips and nails

4.) Nail sandwich strips around vent end of tray

5.) Construct a long handled metal hook for tray removal

6.) Drill tray ends and attach a rope removal handle at each end

Cladding and Tray Guides

Exterior grade plywood cladding 12mm thick, is used on the base and drying cabinet to direct and contain the drying air.

The base and drying cabinet should be painted (no lead paint!) before the cladding is fixed in position.

The cladding must be measured and cut to size from the completed base and drying cabinet. Hence the dimensions given in the parts lists are approximate.

1.) Base Cladding

The completed base with cladding is shown in figure 17

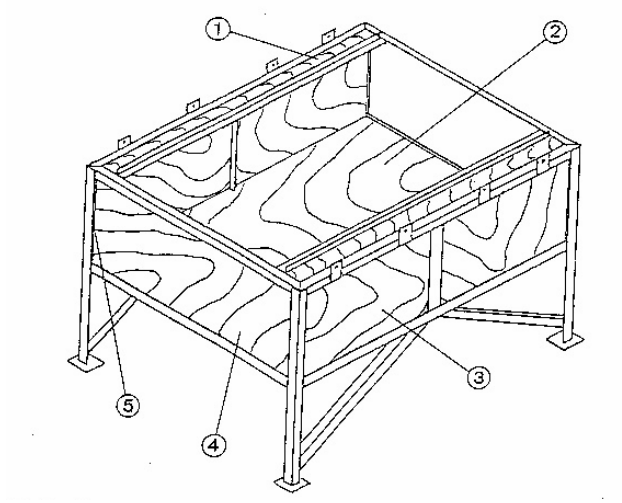

Figure 17: Base with cladding

Part	Name	Qty	Dimensions (mm)	Chamfer (3mm)
1	Top	2	1406 x 135 x 12	Long edge 1 side
2	Bottom	1	1406 x 1096 x 12	All edges 1 side
3	Side	4	700 x 429 x 12	Short edges 1 side
4	Front	1	429 x 1096 x 12	None
5	Fillet	6	385 x 40 x 6	None
-	Wood screws	100	No. 8 x 15	RD or CSK
-	Wood screws	20	No. 8 x 15	CSK

The 3mm chamfers are for flush fitting of the cladding in the corners of the angle iron.

These dimensions are based on the configuration shown in figure 18.

Wood screws can be used to hold fast the cladding. Only the free edges have to be fixed. Countersunk screws must be used to fix the side cladding of the tray guides.

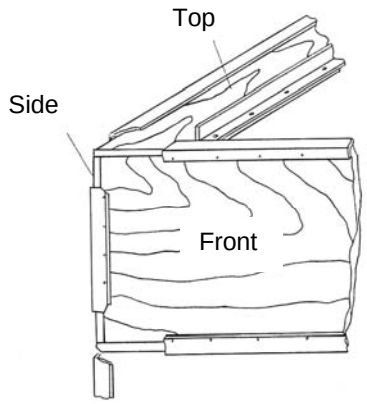

Figure 18: Cladding configuration

Construction

1.) Measure and cut along the cladding, noting the above

2.) Plane chamfers on the edges described in parts list above

3.) Drill the frame and fix the cladding using wood screws at 150mm centres, on the free edges.

2) Drying Cabinet Cladding

Description

The completed drying cabinet with cladding and tray guides in position shown below.

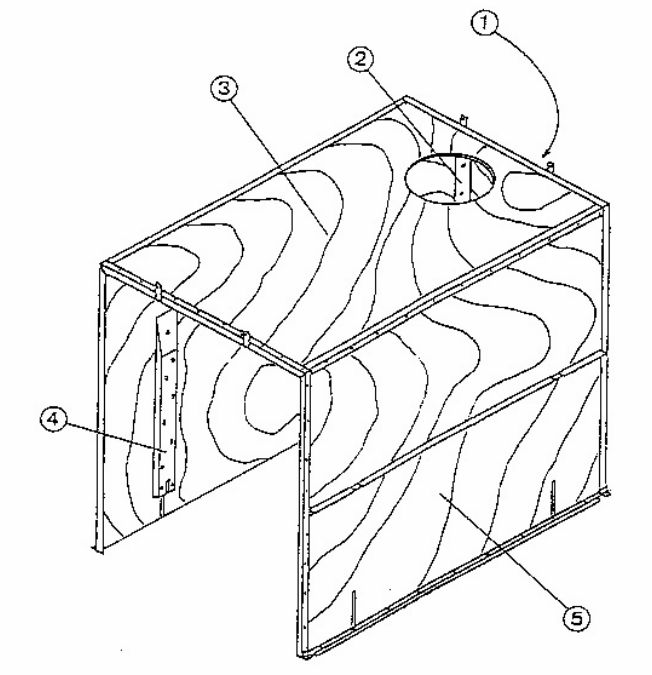

Figure 19 - drying cabinet with cladding and tray guides

Part	Name	Qty	Dimensions	Chamfers
1	Back	1	1201 x 906	I short edge 1 side
2	Back Tray guide	2	50 x 7 x 1150	None
3	Top	1	1408 x 930	4 edges of 1 side
4	Side tray	4	75 x 14 x 960	See TD016
5	Side	2	1408 x 1213	2 short edges 1 side 3
-	Woodscrews	100	No. 8 x 15	Long

Dimensions are based on the configuration shown in figure 20, which is a cutaway of the top left-hand corner at the back.

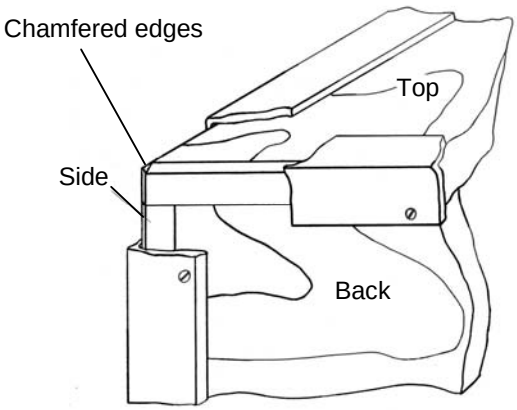

Figure 20: cladding configuration

A large hole is cut in the top of the cladding for the air exit. This should have a diameter of at least 300mm to avoid excessive backpressure. The hole is positioned centrally towards the back, as shown in figure 19.

To allow free vertical movement of the lifting fingers (see figure 31), slots are cut in the side cladding. The slots' positions are also shown in figure 19. Profiling of the bottom back corners of the side cladding is necessary to prevent leakage. This is shown in figure 21.

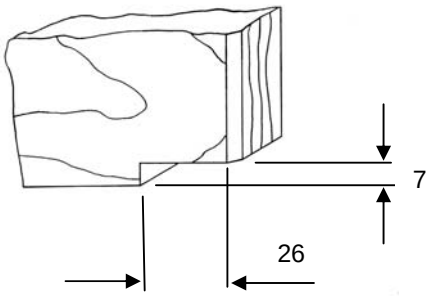

Figure 21: Profiling

Construction

Follow instructions for cladding the base. Note that the holes in the MS angle for fixing the cladding to the framework must be as close to the edge of the MS angle as possible.

Also see the section on Tray Guides as ideally the tray guide should be fitted to the cladding before fitting the frame.

Tray Guides

Tray Guides are needed to align the trays in the drying cabinet. This is to ensure that all the trays fall neatly when the bottom tray has been removed and that trays are then properly positioned for 'pick up' by the fingers.

The guides are fixed to the plywood cladding.

Two guides run down each side and they are positioned to line up with the corner reinforcements. These guides have full chamfers down each side to prevent trays from caching during loading.

There are two guides on the back cladding to line up the trays centrally over the base.

The guides are fixed to the cladding using wood screws:

Part	Name	Qty	Dimensions
-	Woodscrews	25	CSK GALV. ST. No 8 x 15 long
-	Woodscrews	40	CSK GALV. ST. No 10 x 25 long

They are shown in position in figure 19.

Construction

1.) Cut and plane the guides to dimensions shown I the engineering drawing TD016

2) Screw (using countersunk screws, galvanised if available) and glue (waterproof glue) the guides in position on the cladding side guides and top of finger slots in cladding lined up before the cladding is fitted to the drying cabinet.

Drying cabinet doors

There are three doors in the drying cabinet; two small doors for use in the semi continuous drying mode and a large door for bulk loading and unloading.

The doors consist of MS angle frames with plywood cladding. The cladding on the small doors' overhangs on three edges, to minimise air leakage. On the big door there is an edge strip which serves the same purpose. The cladding on the small doors must be chamfered, and 10mm from the angle corner, on the hinged edge, to allow opening of more than 90 degrees.

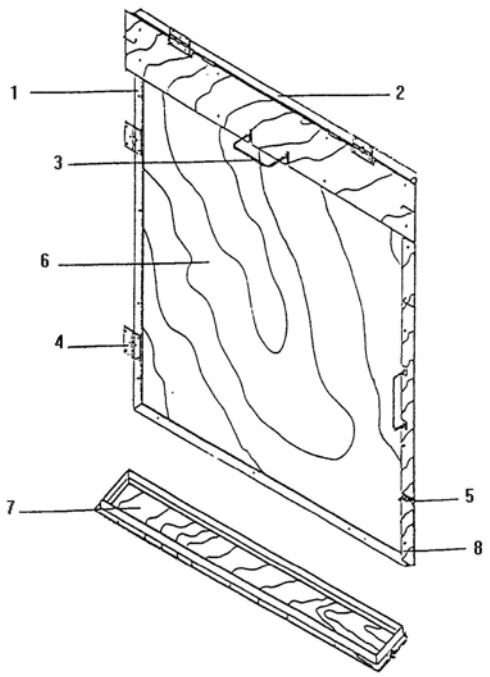

Figure 22: Drying cabinet doors

Part	Name	Quantity	Dimensions	Drawing
1	Large frame	1	25 x 25 x 6 x 3550 long	TD012
2	Small frame	2	25 x 25 x 6 x 2072 long	TD013
3	Handle	3	Diam. 6 x 250 long	TD012
4	Hinge	6	50 x 65 (approx)	TD101
5	Latch	6	60 long (approx)	TD101
6	Large clad	1	876 x 875 x 12	TD101
7	Small Clad	2	936 x 175 x 12	TD101
8	Edge strip	1	50 x 838 x 12	TD101
-	Woodscrews	70	No. 8 x 15 long	-
-	Woodscrews	7	No. 10 x 30 long	-

Construction

1. Make the doorframes from a single length of MS angle cut and bend, as shown in figure 23, or discrete lengths, welded together.

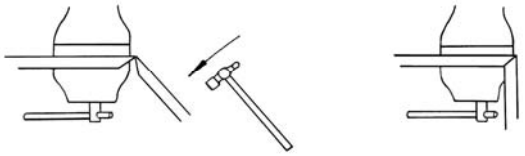

Figure 23: Bent mitre

2. Weld or bolt hinges, handles and latches to each door in the positions given in TD012 and TD013

Where suitable hinges and latches are not locally available they can be fabricated to the design shown in figure 24.

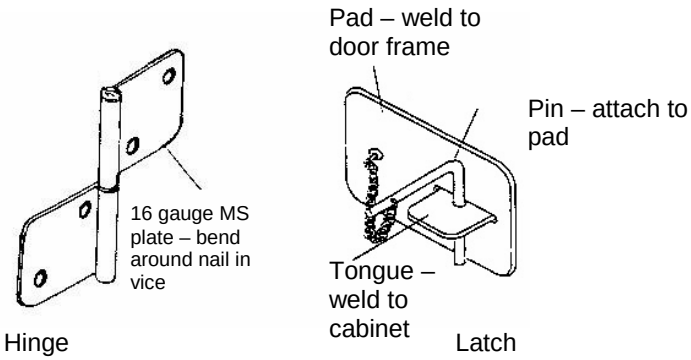

Figure 24: Hinges and latches

General assembly

This section deals with the assembly of the drier components. This assembly of the drier needs at least two people.

Follow these steps:

1.) Place the upper frame on top of the base (cladded) and line up the four legs with each other.

2.) Clamp the meeting faces together and drill the holes I the upper frame using those in the pads of the base for positioning.

3.) Put the nuts and bolts in place, tighten them and then remove the clamps

4.) Slide the drying cabinet (cladded) into position; the back and front of the cabinet should be flush with the edges of the base, and the sides should be equidistant from the base tray supports. Mark the positions of holes in the base through those in the angle pads.

5.) Drill the holes in the base and fit the nuts and bolts

6.) Drill the holes in the upper frame through those in the drying cabinet upper pads and fit nuts and bolts.

Set up the lifting mechanism by following the steps below:

7.) Bolt the four plain bearings tot the upper frame and place the lower halves of the split bearing sin position.

8.) Weld two cams to each bearing shaft in the positions shown in figure 25.

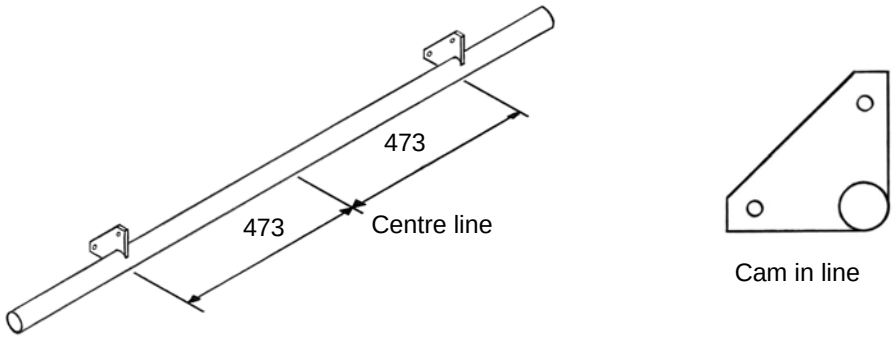

Figure 25: Cams on shaft

9.) Mount the bearing shaft in the bearing blocks. Fit the bearing end plates and bolt on the upper half of the left-hand split bearing.

10.) Bolt the links onto the upper holes of the cams and set the cams at approx 25 degrees as shown in figure 26.

technical guide

Cam

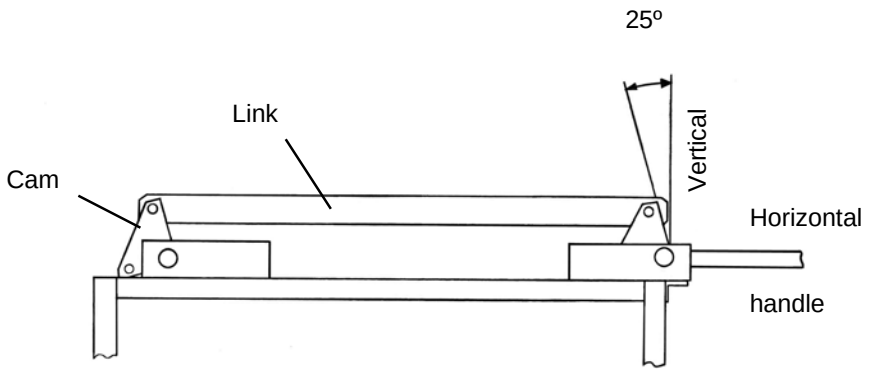

Figure 26: Set at 25 degrees

11.) Weld the operating lever to the right hand bearing shaft in a horizontal position. (see drawing TD102)

12.) Bolt the fingers in position (see figure 14 for fixing configuration) between the finger supports

13.) Connect the tope portion of the tie rods to the cams' lower holes, and the bottom portion to the fingers.

14.) With the finger – in their lowered position (i.e. resting on the tray support (base) and the operating lever horizontal, clamp the top and bottom portions of the tie rods together (See figure 27)

15.) Check the operation of the lifting mechanisms. All the fingers should move exactly together i.e. when one finger horizontal, all horizontal; when one finger raised fully, all raised fully. If all the fingers do not move together equally, then make small adjustments to the lengths of the tie rods. When all fingers are correctly positioned, weld top and bottom portions of the tie rods together.

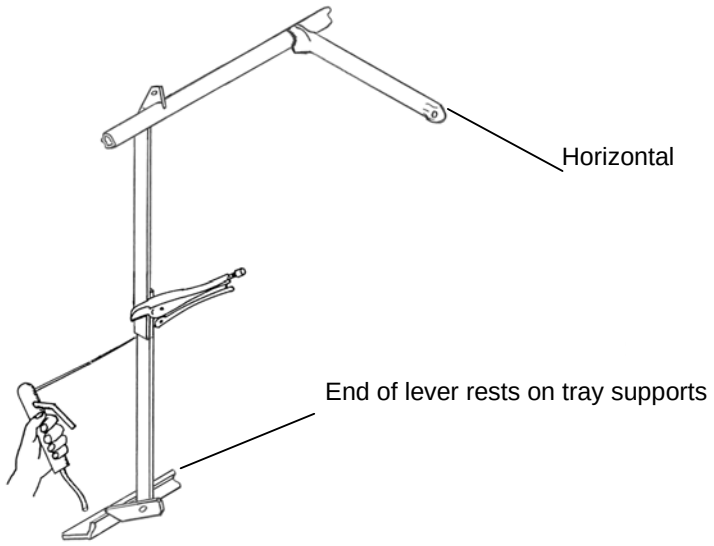

Figure 27: Welding and lifting mechanism

Stop bar and Handle Hook

Before fixing the positions of the stop bar and handle hook four trays are needed to take up any play in the lifting mechanism. Therefore, the section on tray construction must be followed before continuing.

The stop bar is welded to one tie rod assembly to prevent the fingers being raised too high, which would result in the mechanism jamming.

The handle hook is used to retain the handle of the lifting lever extension bar whilst the fingers are in their raised position, allowing the loading and unloading to be performed by one person.

To fix the position of the stop bar:

16.) Place four trays into the dryer.

17.) Fix the operating lever extension to the operating lever and pull down, to raise the second bottom tray and those above it by 25 mm. The fingers will now be in the fully raised position.

18.) Mark one of the tie rods where it passes through the slot in the horizontal beam of the tray cabinet.

19.) Lower the trays and weld on the stop bar at the position marked in stage 18.

Positioning the handle hook requires two people.

To fix the position of the handle hook:

20.) Remove the four trays. One person holds down the operating lever so that the stop bar is hard up against its stop. The other person places the hook on the upper frame centre support, so that the end is roughly in line with the handle (see figure 2) Put the back corner of the handle over the hook end and move the hook down the centre support until it holds the handle in position. Mark the holes in the hook upright through to the upper frame. Remove the handle hook, drill the holes and bolt the handle hook on.

21.) Fit the drying cabinet doors by welding or bolting the hinges in position.

22.) Fit door latches

The drier is now complete, ready to be connected to the heat or hot air source.

It is recommended, however, as it will operate under moist internal conditions that all cladding should be covered with at least two coats of good quality varnish.

Operation and Maintenance

Operation

What follows is a step-by-step description of the use of the drier.

1. Load 15 trays fully and evenly with the material to be dried.
2. Load the trays into the drier with the open ends alternating between back and front, with the bottom tray opening at the front, as shown in figure 28
3. Close the doors and start the blower
4. Now fill the spare tray with material be dried.
5. After the specified drying period for the particular product, pull down on the operating lever and put the handle under the handle hook.
6. Open the small lower door and remove the bottom tray using the long handled metal hook NOT by the tray wall.
7. Remove the lever from the handle hook and raise it in a controlled manner. There will be a bang as the trays fall past the lifting fingers.
8. Open the top door of the direr and carefully slide the filled spare tray in and close the top door.
9. Empty the removed tray of dry product and refill it with material to be dried.
10. Wait for the specified drying period and then remove the bottom tray as described in 4 and slide in full tray etc. etc.

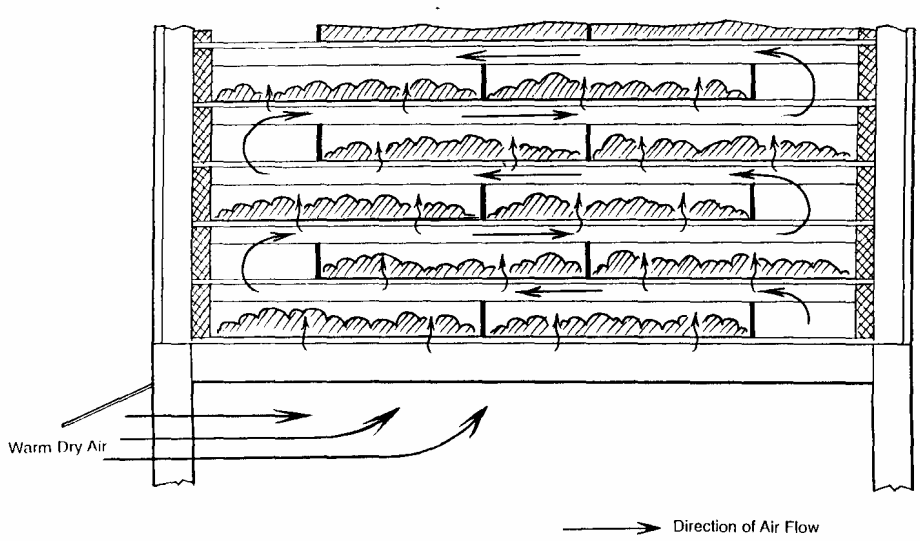

Figure 28: Alternating open ends and airflow

technical guide

The movement of the fingers during operation is shown in figure 29.

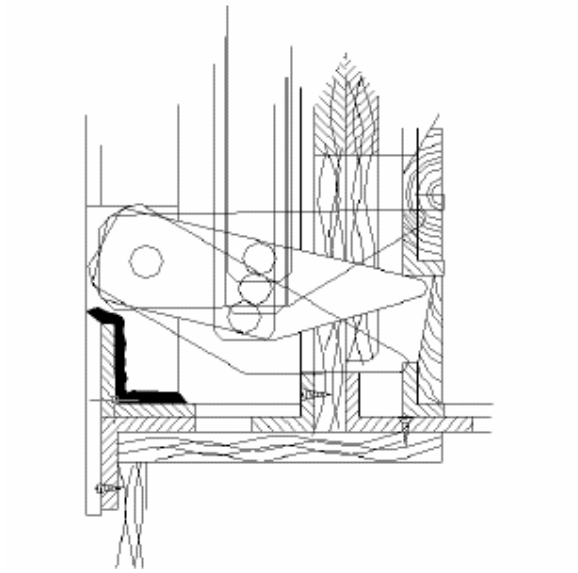

Figure 29: Lifting finger operation

Operational Safety

The drier is perfectly safe if the following simple rules adhered to:

1. Don't put fingers near moving parts
2. Always use the metal hook to remove the bottom tray. NEVER put hands in the gap between the trays

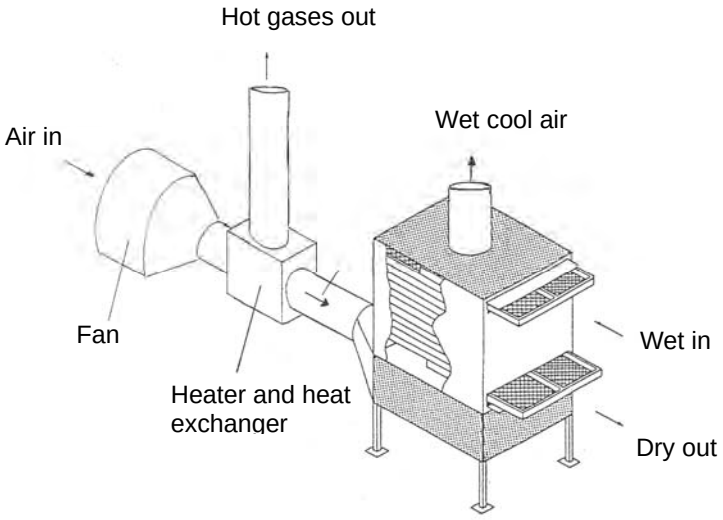

Figure 30: Dryer with heater

Maintenance

The drier requires very little routine maintenance

- oil moving parts monthly
- thoroughly clean monthly

Other maintenance will be of repair (e.g. tray mesh) and painting nature.

technical guide

Heating

For effective drying of the produce, warm (max 80 degree), dry, clean air has to be driven through the drier. Hence the drier can utilise any medium grade heat source combined with a heat exchanger and blower.

Most operational units outline an indirect (fuelled) thermostat heater blower, either diesel or gas fired. One model that has been found particularly appropriate is the Benson-Jetaire Zeta, with an output of 60KW (220,000BTU) and an airflow of about 1700 cfm.

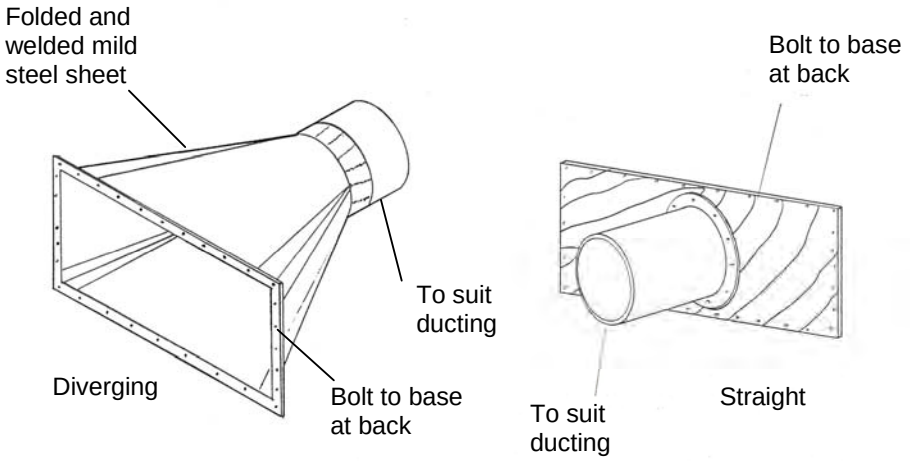

Figure 31: Diverging and straight connectors

Diverging connectors have been used in the past for their low-pressure loss. The alternative, straight through connector shown would be a lot cheaper, without significantly increasing pressure losses, but has not been tested.

Trouble Shooting

1. Difficulty with loading trays into cabinet

- Check dimensions of tray guides
- Is the angle iron ramped or recessed to the corners of the trays?

2. Tray not falling properly at top of stack

- Check tray guides, have tops of the tray guides been chamfered

3. Trays not falling cleanly at bottom of stack

- Check width of tray with the angle iron lengths attached. Is the tray width the distance between fingers lowered position minus 2mm

- Are all the fingers fully lowered when lifting handle is horizontal? (if not see below)

4. Unable to properly raise trays

a. Check that all fingers are fully lowered when lifting handle is horizontal. If not make necessary adjustments to length of tie rod and/ or stop mechanism

b. Check that all fingers move up together when handle is pulled down

- If not check the lifting mechanism for slack i.e. properly tightened nuts and bolts
- If the fingers are still not moving up together make adjustments to length of tie rods to ensure that when fingers are in the fully raised position the stack of trays can be lifted clearly and evenly (i.e. trays do not slip off end of finger)
- If the trays are still slipping off the fingers, Small adjustments can me made to the finger length by building up the tip with held?

5. Doors

- All doors should be open and closed easily. If during construction of frame the doors operate properly but once cladded the doors do not open or shut properly it may be that the inner frame has shifted out of square. It will be necessary to adjust the doors accordingly. A temporary measure is to correct the inner frame shape using a wedge of wood jammed between the inner and outer frames.

6. Heater Blower

- A manual is provided with the UK manufacture heater blower unit most commonly used with the Practical Action Tray Drier

Additional Points

A flue must be connected to the heater unit to take away exhaust gases. This should not contain any sharp bends (smaller than 45 degrees) as otherwise the efficiency of the burner is affected.

Operation at high altitude: At high altitudes there is less oxygen available for combustion and there is less weight of air per unit volume being forced through the drier. Unless adjustments are made to the burner - for example, smaller injector nozzle size and/ or increasing amount of air entering burner – then combustion efficiency will be poor.

DO NOT SCALE

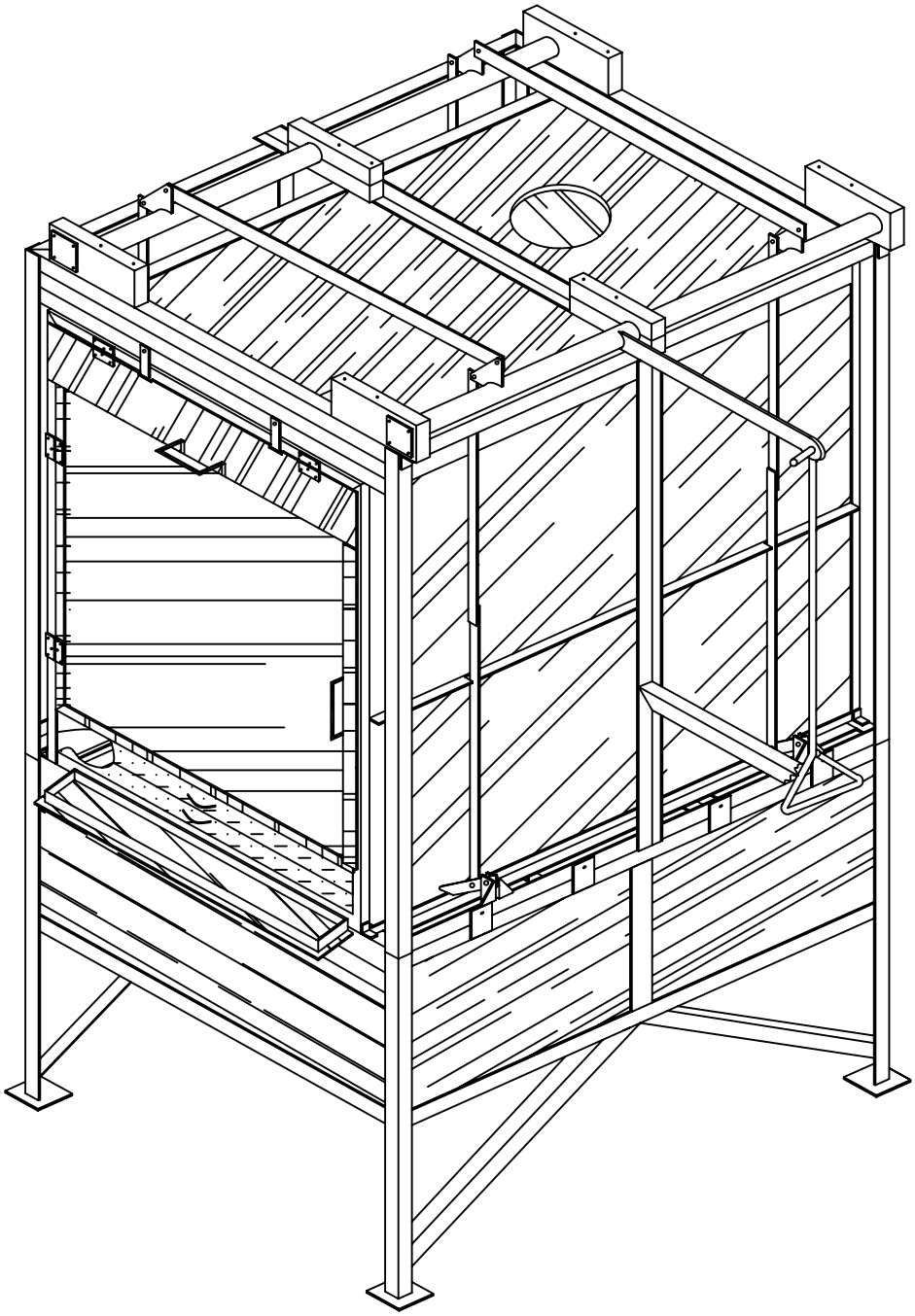

No.	Description	CHK	AP'D	DATE

REVISIONS

Practical Action
www.practicalaction.org
infoserv@practicalaction.org.uk

TITLE TRAY DRYER	DRAWN A.R	TRACE –	CHK –	NOT TO SCALE
DIMENSIONS IN MM	DRAWING No. TD101			

DO NOT SCALE

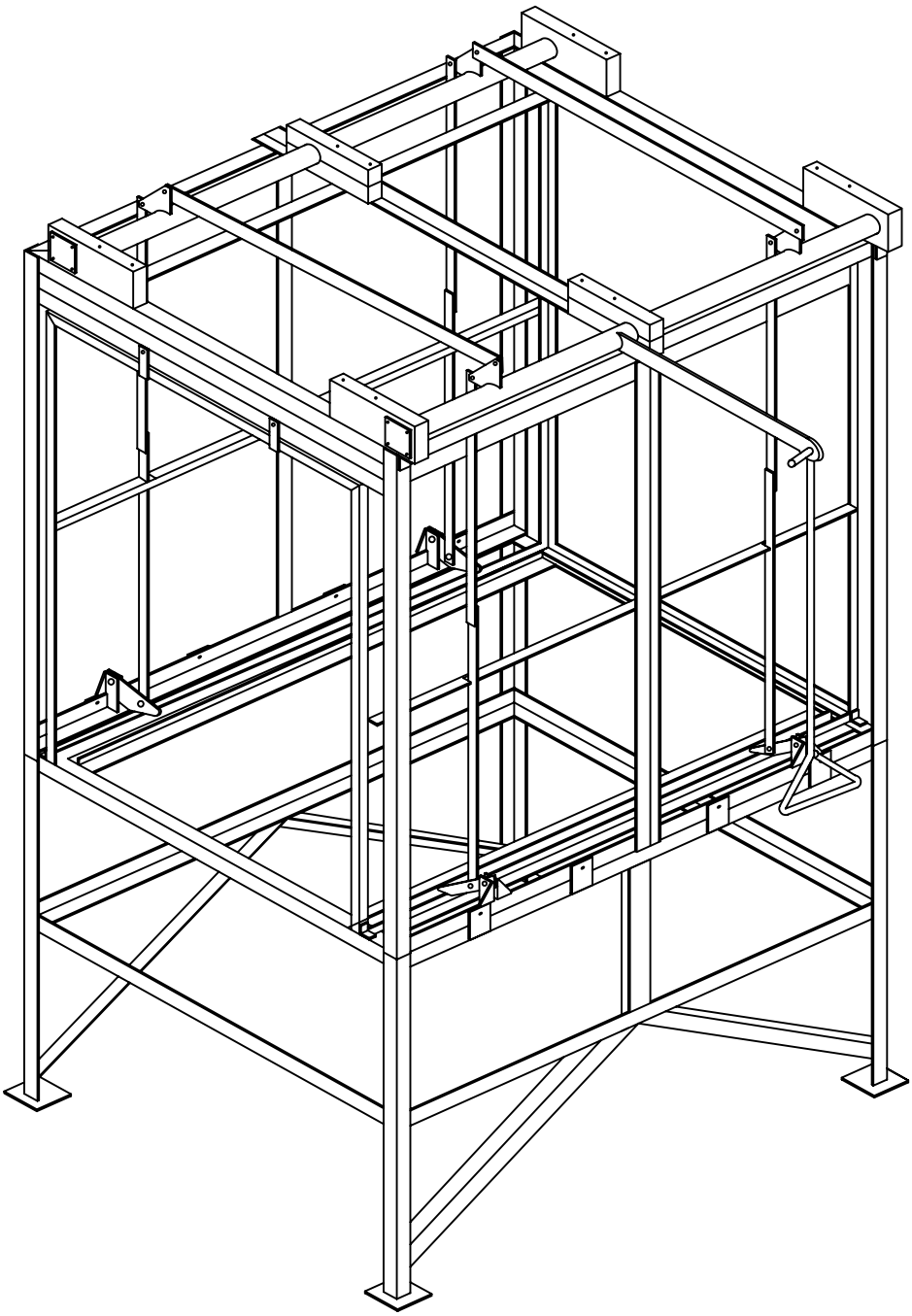

No.	Description	CHK	AP'D	DATE

REVISIONS

Practical Action www.practicalaction.org infoserv@practicalaction.org.uk	TITLE TRAY DRYER	DRAWN A.R	TRACE -	CHK -		NOT TO SCALE
	DIMENSIONS IN MM	DRAWING No. TD102				

DO NOT SCALE

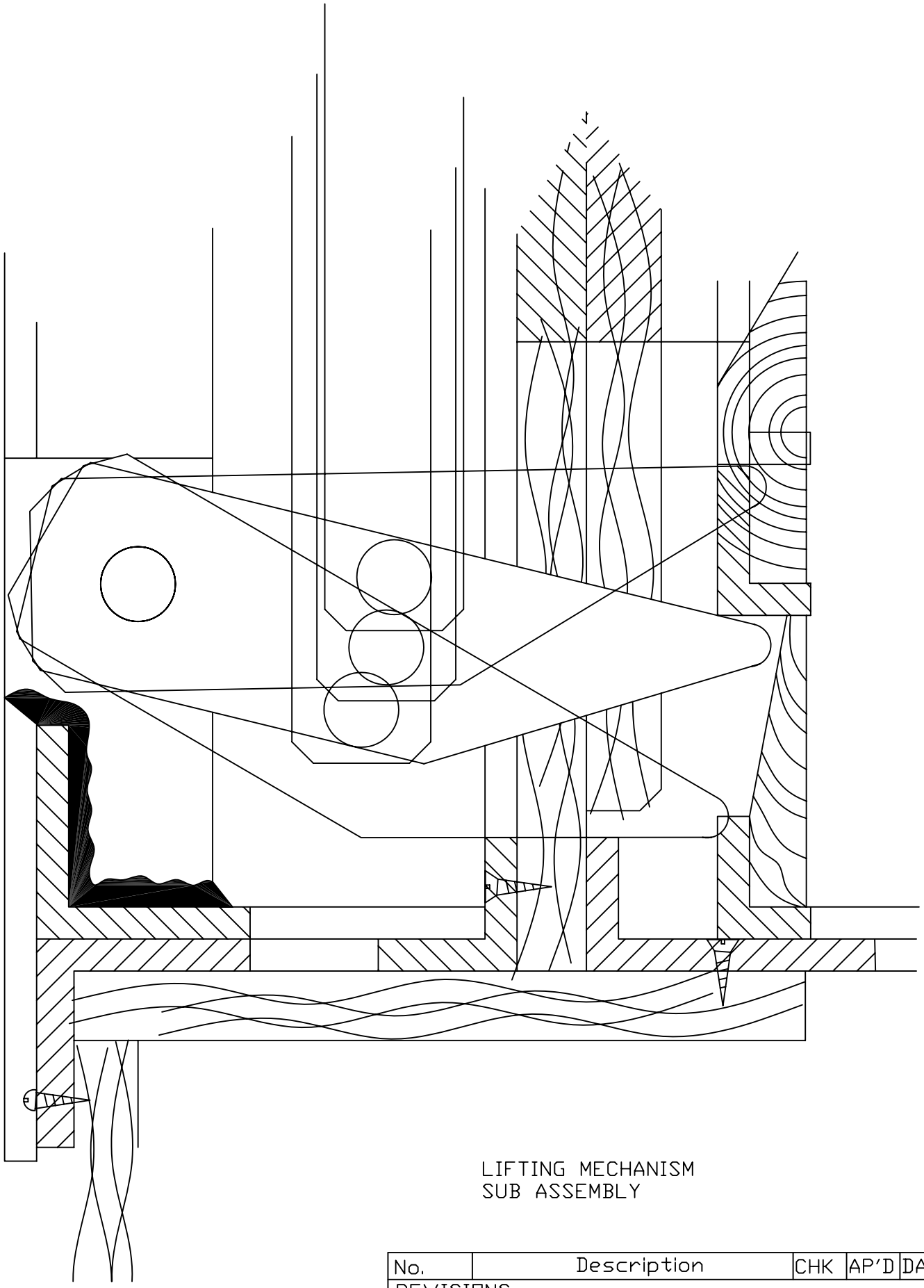

LIFTING MECHANISM
SUB ASSEMBLY

No.	Description	CHK	AP'D	DATE
REVISIONS				

Practical Action www.practicalaction.org infoserv@practicalaction.org.uk	TITLE TRAY DRYER	DRAWN A.R	TRACE -	CHK -		NOT TO SCALE
	DIMENSIONS IN MM	DRAWING No. TD103				

DO NOT SCALE

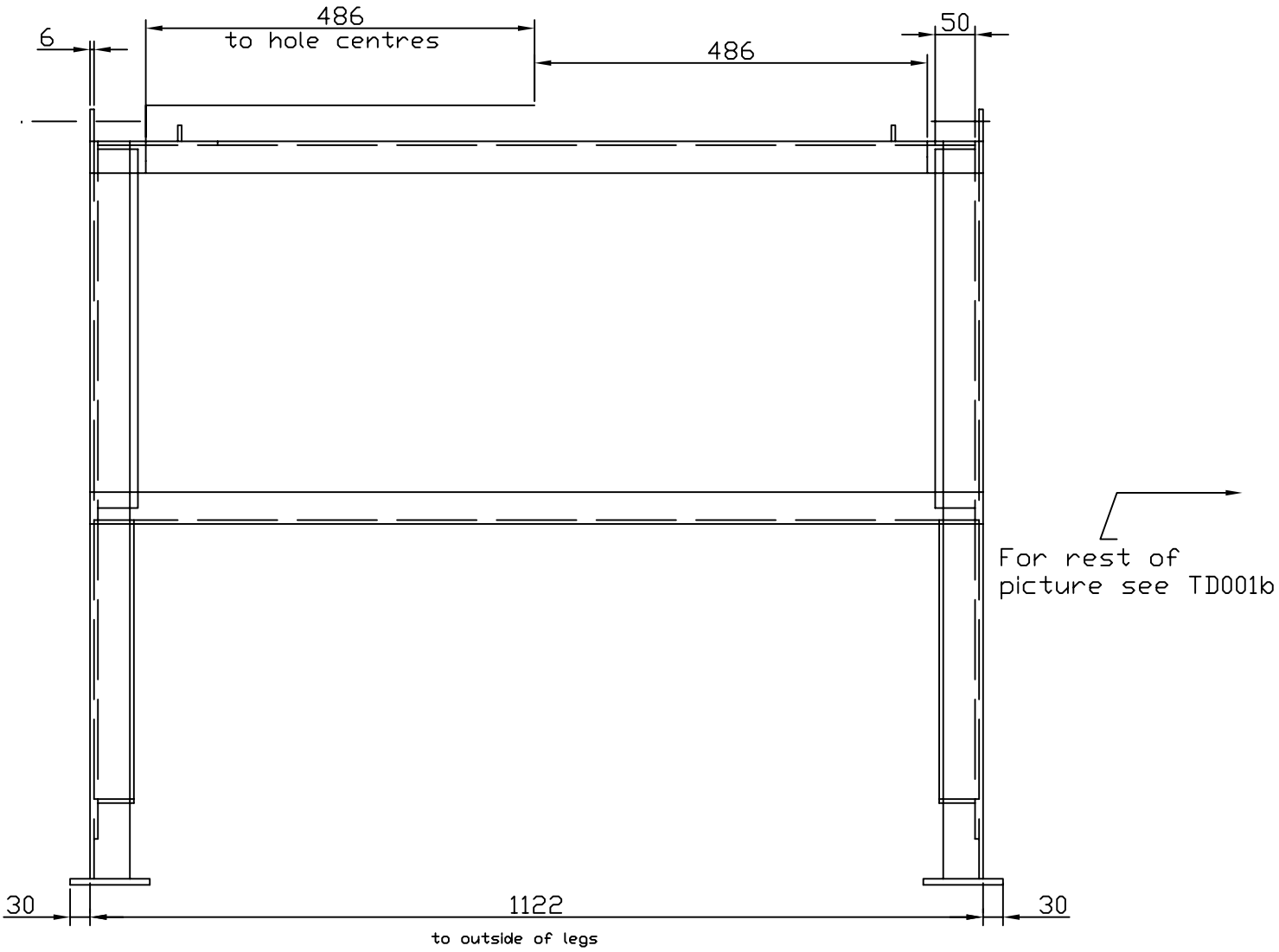

BASE - 1 OFF- MILD STEEL

(SEE DRAWING TD001-C FOR PLAN VIEW)

TD001	Side Elevation	-	-	-
No.	Description	CHK	AP'D	DATE
REVISIONS				

Practical Action www.practicalaction.org infoserv@practicalaction.org.uk	TITLE TRAY DRYER	DRAWN A.R	TRACE -	CHK -		NOT TO SCALE
	DIMENSIONS IN MM	DRAWING No. TD001a				

DO NOT SCALE

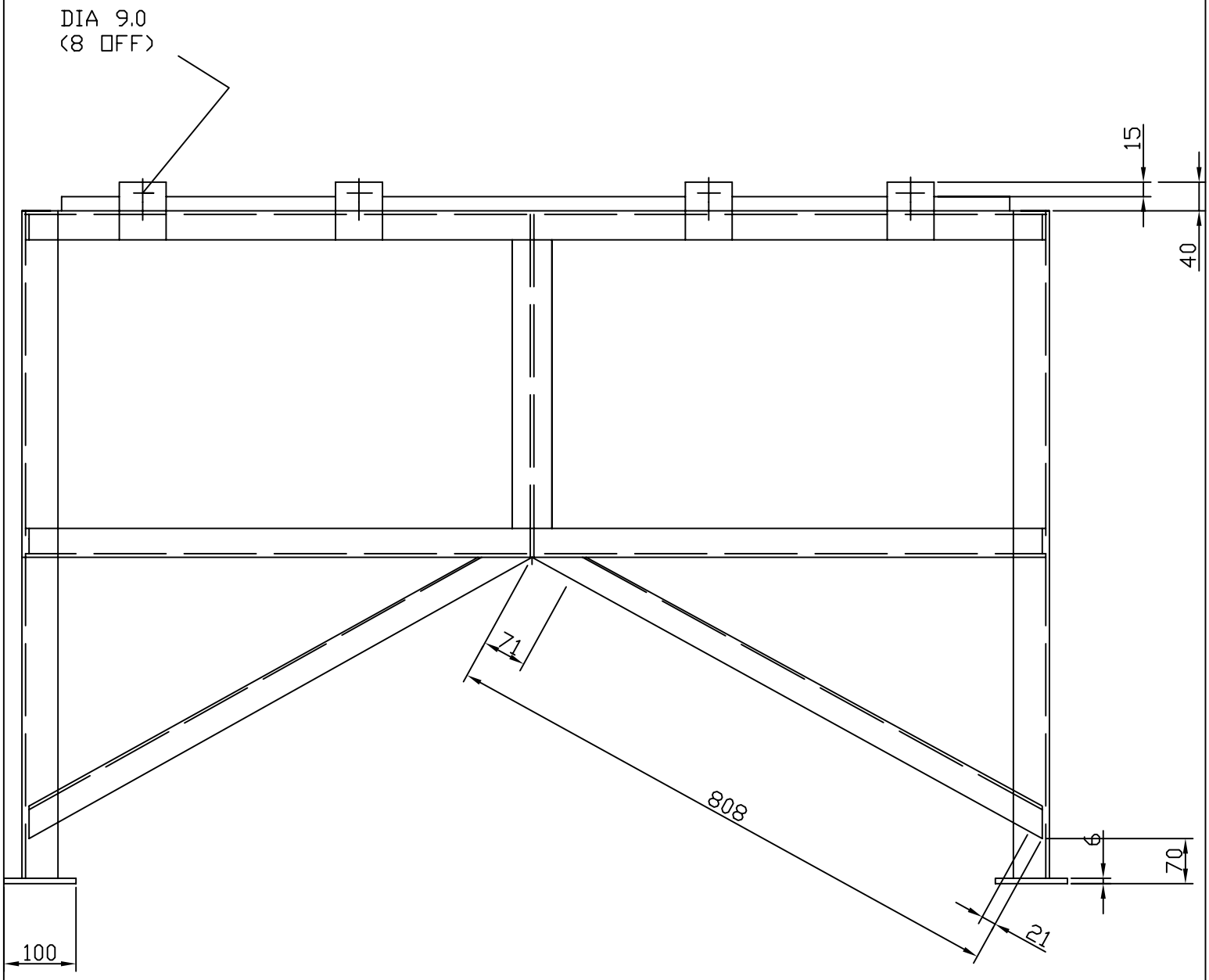

BASE - 1 OFF- MILD STEEL

(SEE DRAWING TD001-A FOR FRONT VIEW)

(SEE DRAWING TD001-C FOR PLAN VIEW)

TD001	Side Elevation	-	-	-
No.	Description	CHK	AP'D	DATE
REVISIONS				

Practical Action www.practicalaction.org infoserv@practicalaction.org.uk	TITLE TRAY DRYER	DRAWN A.R	TRACE -	CHK -		NOT TO SCALE
	DIMENSIONS IN MM	DRAWING No. TD001b				

DO NOT SCALE

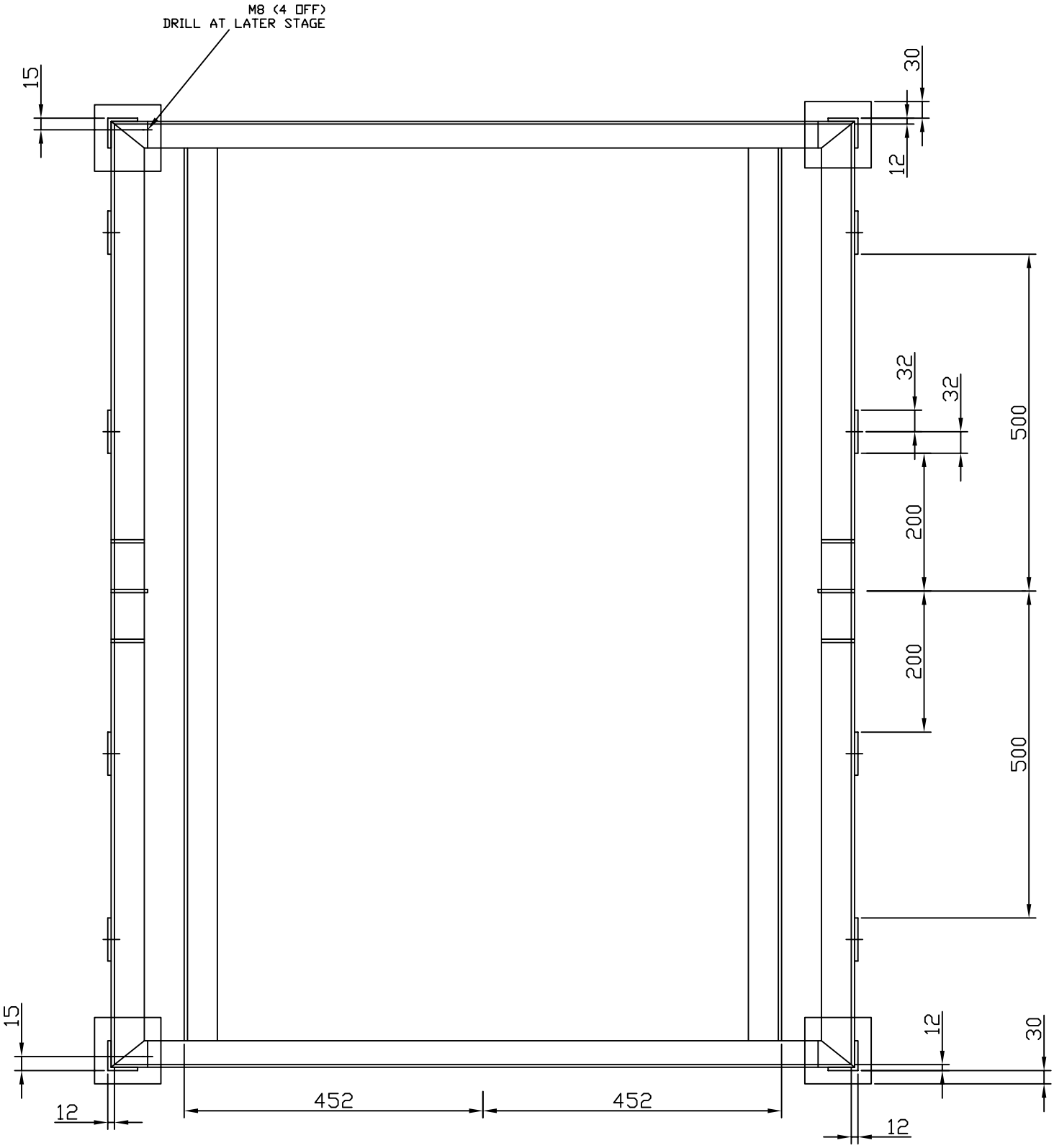

(SEE DRAWING TD001-A FOR FRONT VIEW)
(SEE DRAWING TD001-B FOR SIDE VIEW)

BASE - 1 OFF- MILD STEEL

TD001	Side Elevation	-	-	-
No.	Description	CHK	AP'D	DATE
REVISIONS				

Practical Action www.practicalaction.org infoserv@practicalaction.org.uk	TITLE TRAY DRYER	DRAWN A.R	TRACE -	CHK -		NOT TO SCALE
	DIMENSIONS IN MM	DRAWING No. TD001c				

DO NOT SCALE

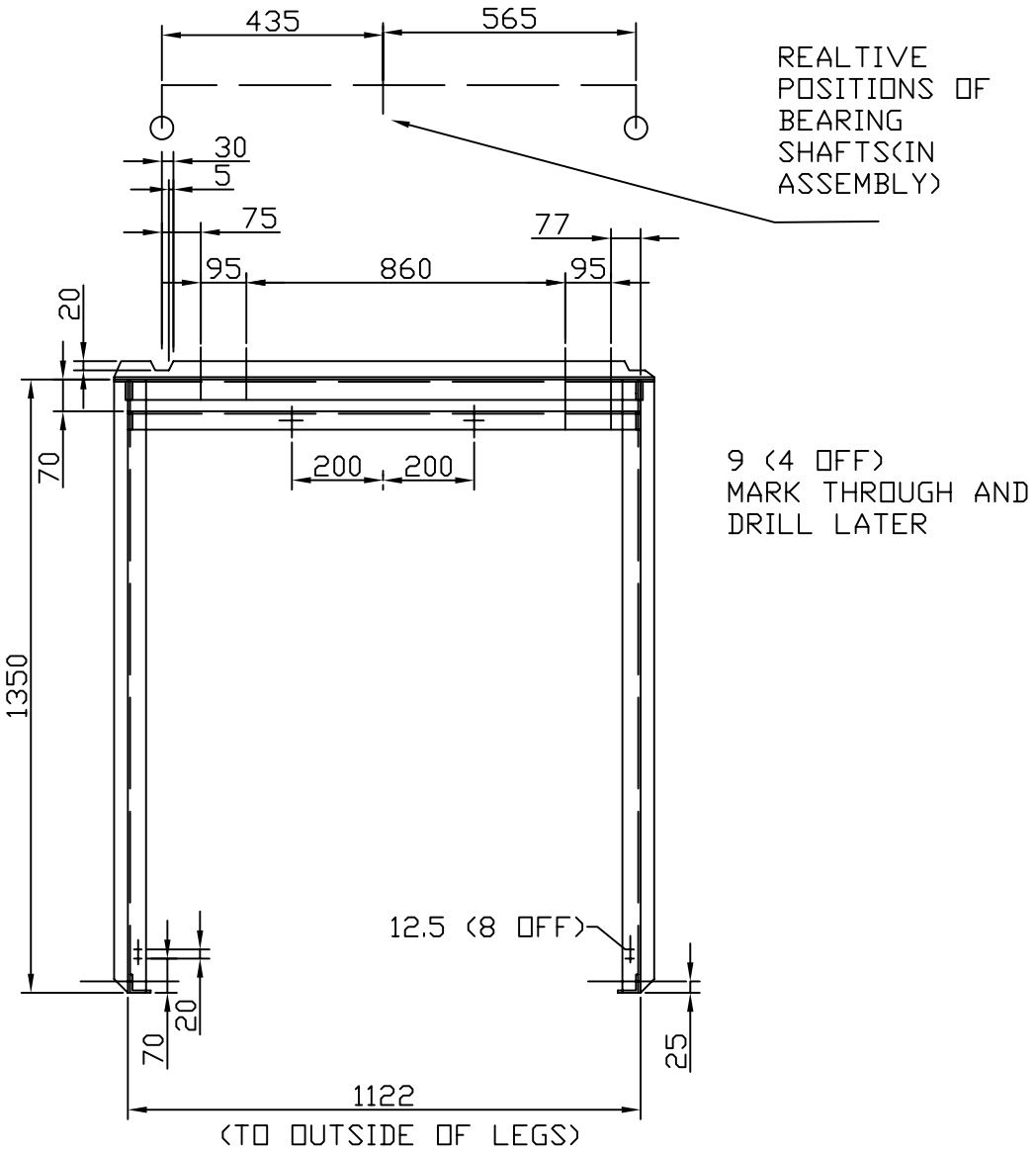

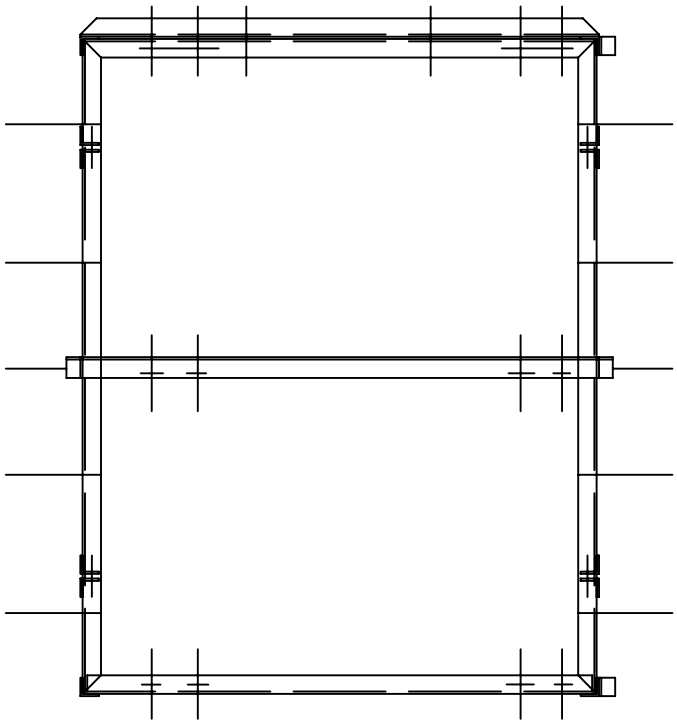

UPPER FRAME - 1 OFF - MILD STEEL

No.	Description	CHK	AP'D	DATE
REVISIONS				

Practical Action www.practicalaction.org infoserv@practicalaction.org.uk	TITLE TRAY DRYER	DRAWN A.R	TRACE -	CHK -		NOT TO SCALE
	DIMENSIONS IN MM	DRAWING No. TD002a				

DO NOT SCALE

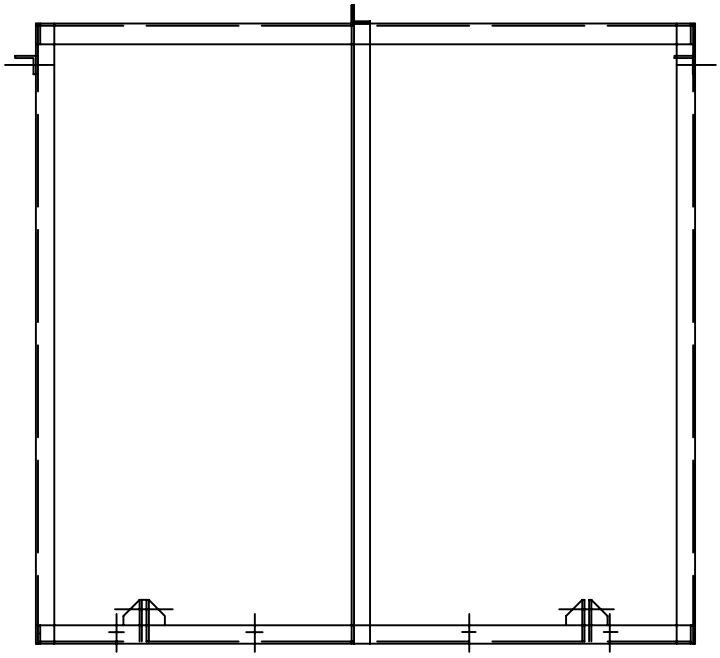

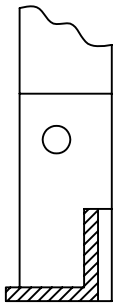

UPPER FRAME - 1 OFF - MILD STEEL

		-	-	-
No.	Description	CHK	AP'D	DATE

REVISIONS

Practical Action www.practicalaction.org infoserv@practicalaction.org.uk	TITLE TRAY DRYER	DRAWN A.R	TRACE -	CHK -		NOT TO SCALE
	DIMENSIONS IN MM	DRAWING No. TD002b				

DO NOT SCALE

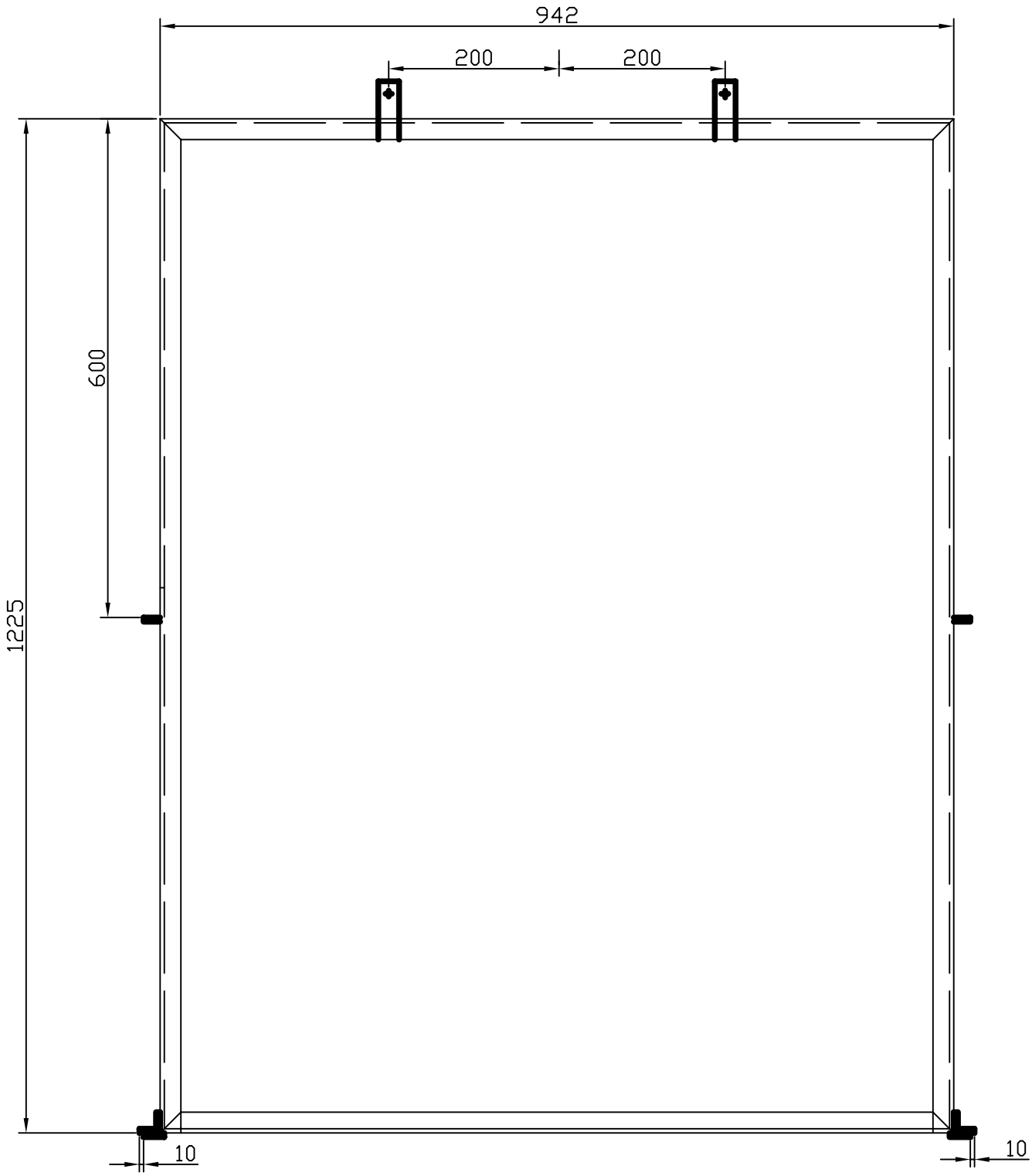

CABINET - 1 OFF- MILD STEEL

(SEE DRAWING TD003-B FOR PLAN VIEW)

No.	Description	CHK	AP'D	DATE
		-	-	-

REVISIONS

Practical Action www.practicalaction.org infoserv@practicalaction.org.uk	TITLE TRAY DRYER	DRAWN A.R	TRACE -	CHK -		NOT TO SCALE
	DIMENSIONS IN MM	DRAWING No. TD003a				

DO NOT SCALE

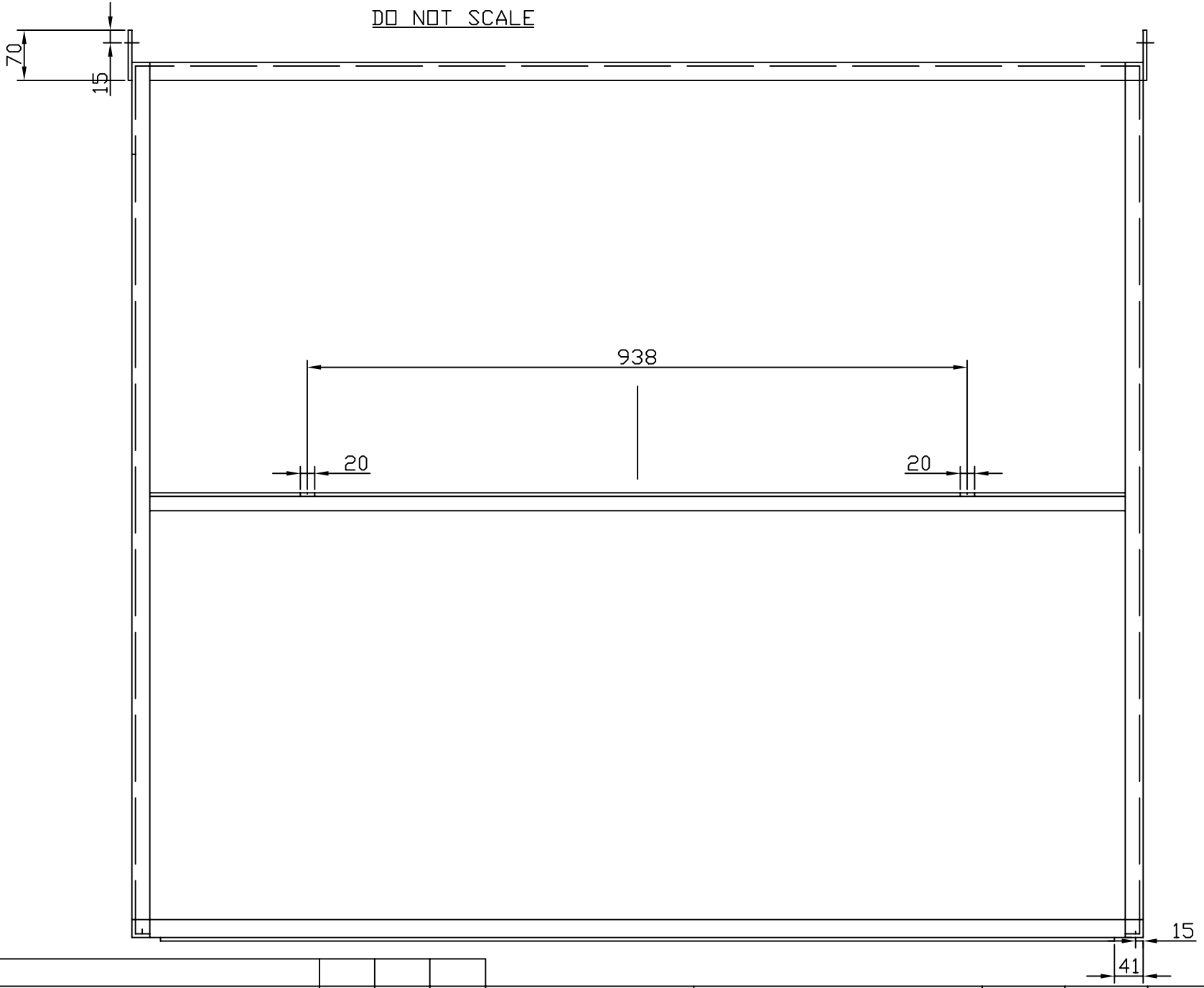

CABINET -
1 OFF-
MILD STEEL

(SEE DRAWING
TD003-A FOR ALT.
VIEW)

No.	Description	CHK	AP'D	DATE

REVISIONS

Practical Action
www.practicalaction.org
infoserv@practicalaction.org.uk

TITLE TRAY DRYER	DRAWN A.R	TRACE -	CHK -	NOT TO SCALE
DIMENSIONS IN MM	DRAWING No. TD003b			

DO NOT SCALE

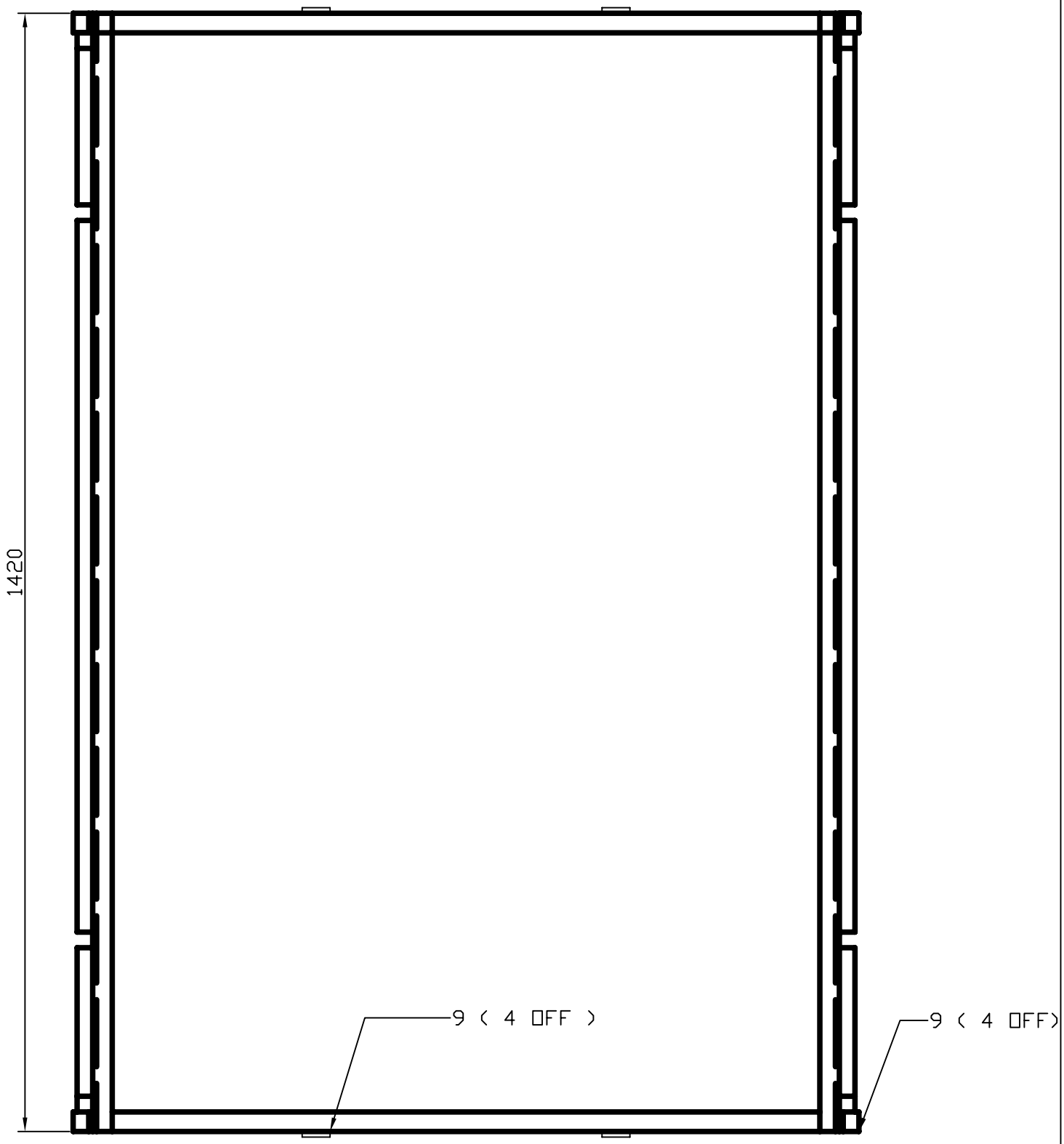

CABINET - 1 OFF- MILD STEEL

No.	Description	CHK	AP'D	DATE
		-	-	-

REVISIONS

Practical Action www.practicalaction.org infoserv@practicalaction.org.uk	TITLE TRAY DRYER	DRAWN A.R	TRACE -	CHK -		NOT TO SCALE
	DIMENSIONS IN MM	DRAWING No. TD002c				

DO NOT SCALE

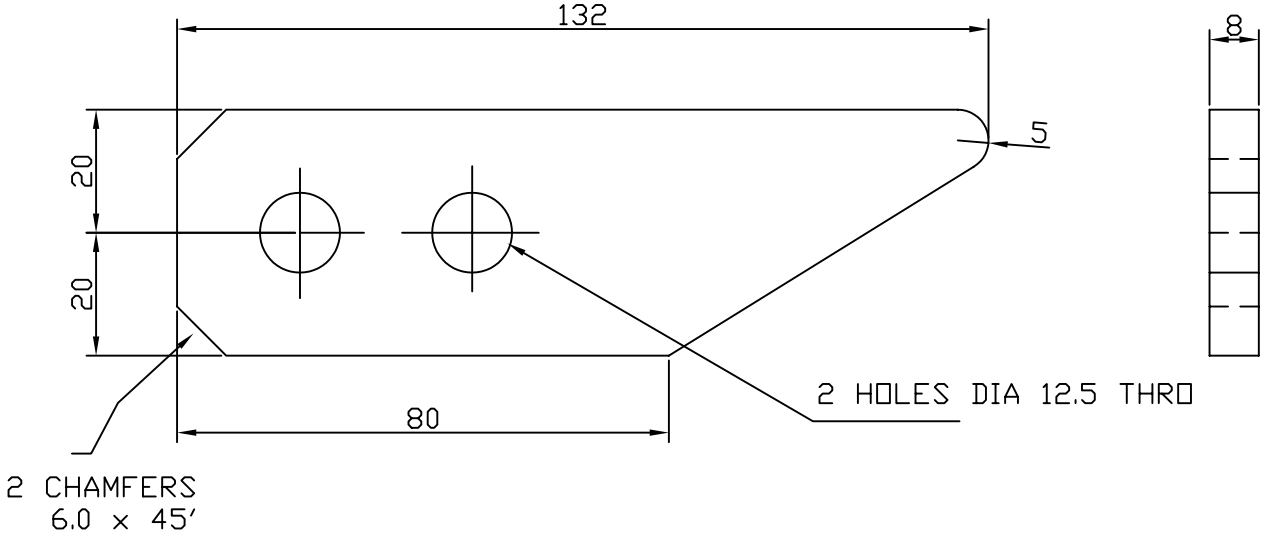

MANUFACTURING NOTE

For equal fingers:-

1. Cut the four finger out roughly and drill holes

2. Bolt to gether and make profiles equal by grinding/ filing

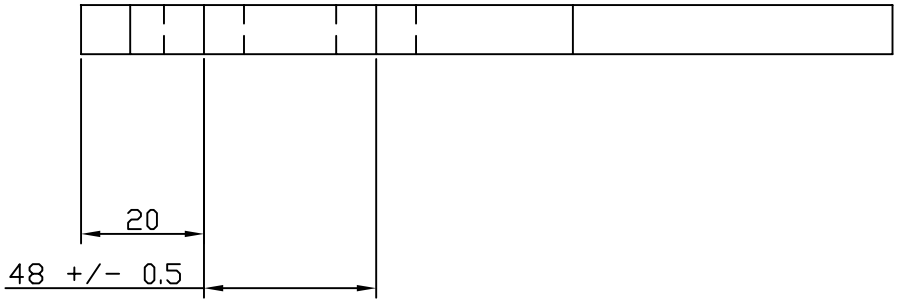

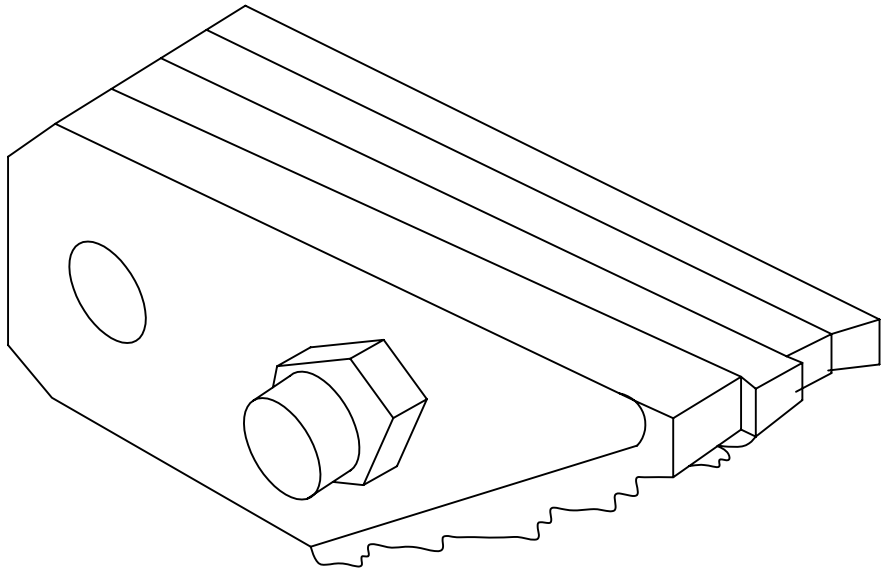

LIFTING FINGERS - OFF - MILD STEEL

No.	Description	CHK	AP'D	DATE

REVISIONS

Practical Action
www.practicalaction.org
infoserv@practicalaction.org.uk

TITLE TRAY DRYER	DRAWN A.R	TRACE -	CHK -	NOT TO SCALE
DIMENSIONS IN MM	DRAWING No. TD004			

DO NOT SCALE

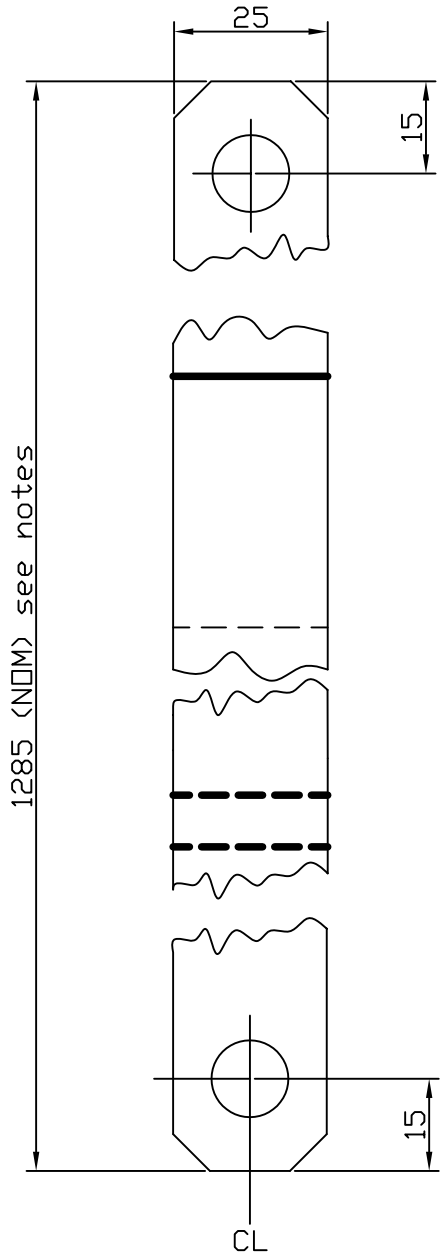

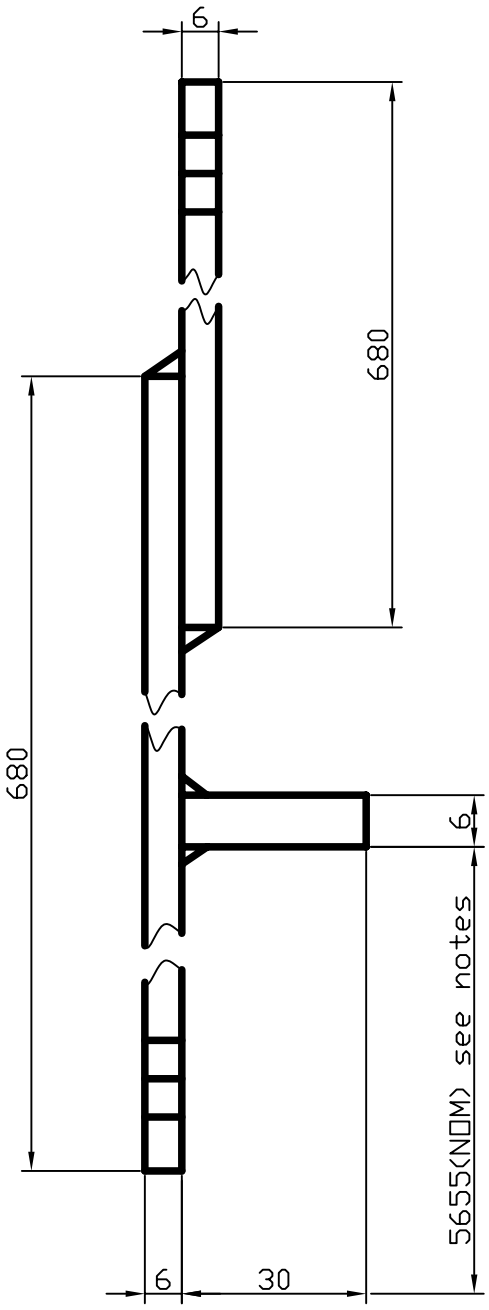

CAM FINGER TIE ROD

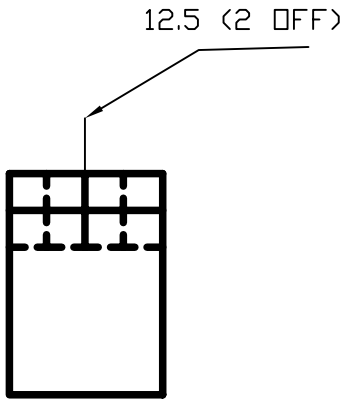

MANUFACTURING NOTE

Each cam-lever tie rod consists of 2 bars 680 long. A stop bar (30X25X6) is welded to one tie rod only.
The rods are assembled in conjunction with the rest of the lifting mechanism and the main frame.
This is described in the accompanying "construction notes".

No.	Description	CHK	AP'D	DATE
		–	–	–

REVISIONS

Practical Action www.practicalaction.org infoserv@practicalaction.org.uk	TITLE TRAY DRYER	DRAWN A.R	TRACE –	CHK –	NOT TO SCALE
	DIMENSIONS IN MM	DRAWING No. TD005			

DO NOT SCALE

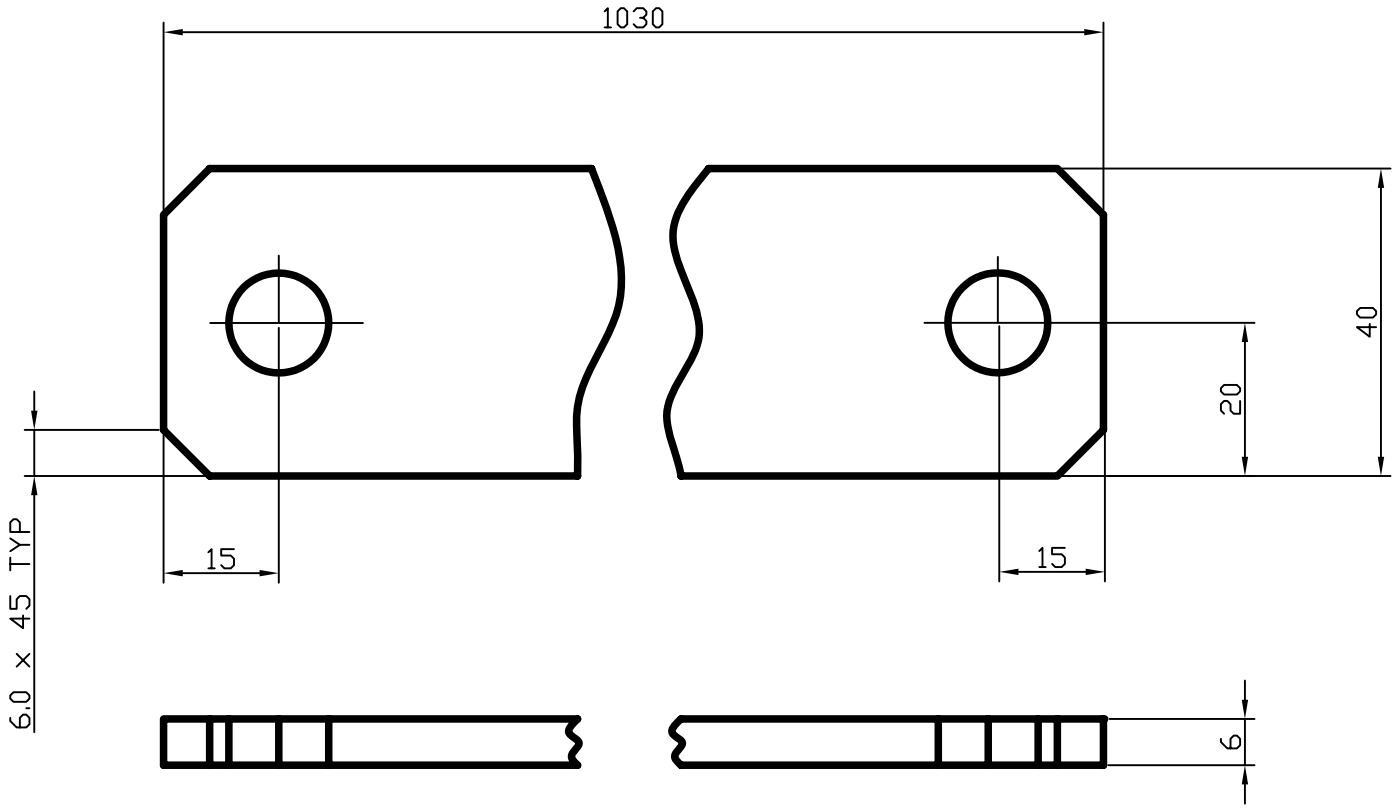

TOP CAM LINK - 2 OFF - MILD STEEL

Fabrication note

The distance between the holes is equal to the distance between centres of the lifting shafts when the latter are in position on top frame. (see general assembly- TD00)

		-	-	-
No.	Description	CHK	AP'D	DATE

REVISIONS

Practical Action www.practicalaction.org infoserv@practicalaction.org.uk	TITLE TRAY DRYER	DRAWN A.R	TRACE -	CHK -		NOT TO SCALE
	DIMENSIONS IN MM	DRAWING No. TD006				

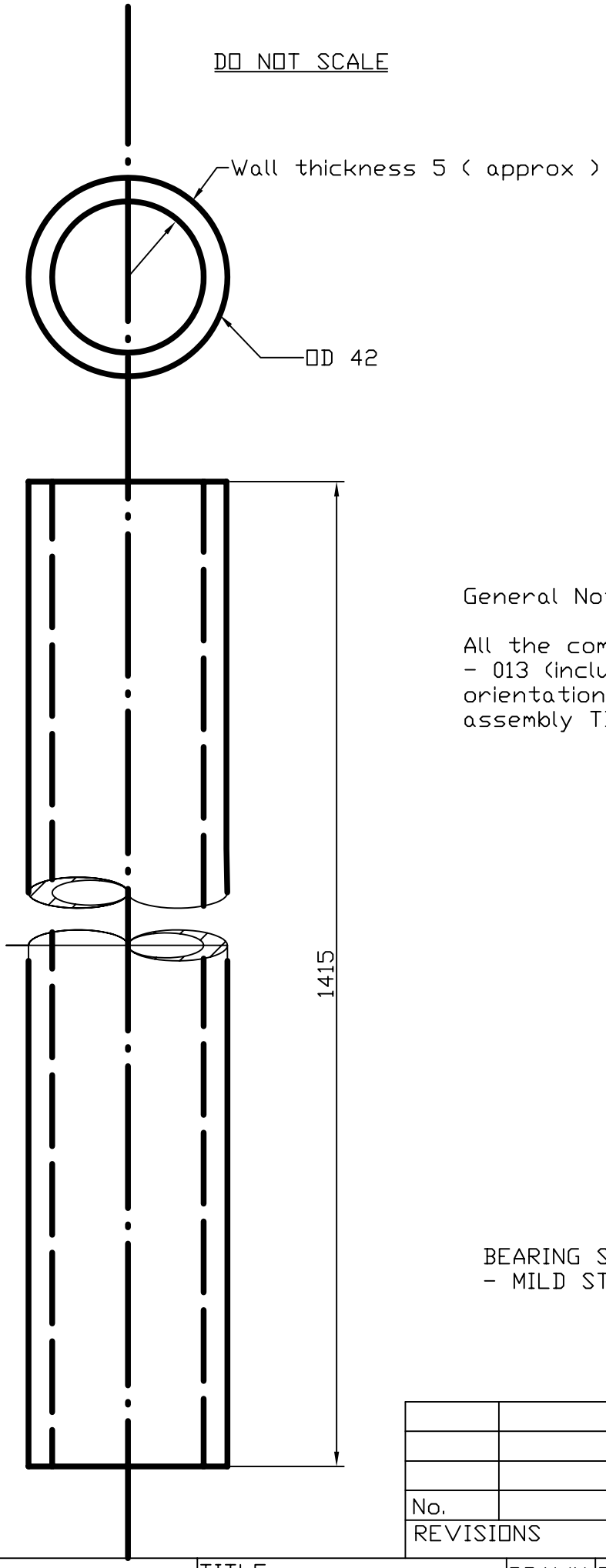

General Note

All the components in drawings TD001 - 013 (inclusive) are drawn in the orientation they are in, in the gneral assembly TD101

BEARING SHAFT
- MILD STEEL

No.	Description	CHK	AP'D	DATE
		-	-	-

REVISIONS

Practical Action www.practicalaction.org infoserv@practicalaction.org.uk	TITLE TRAY DRYER	DRAWN A.R	TRACE -	CHK -		NOT TO SCALE
	DIMENSIONS IN MM	DRAWING No. TD007				

DO NOT SCALE

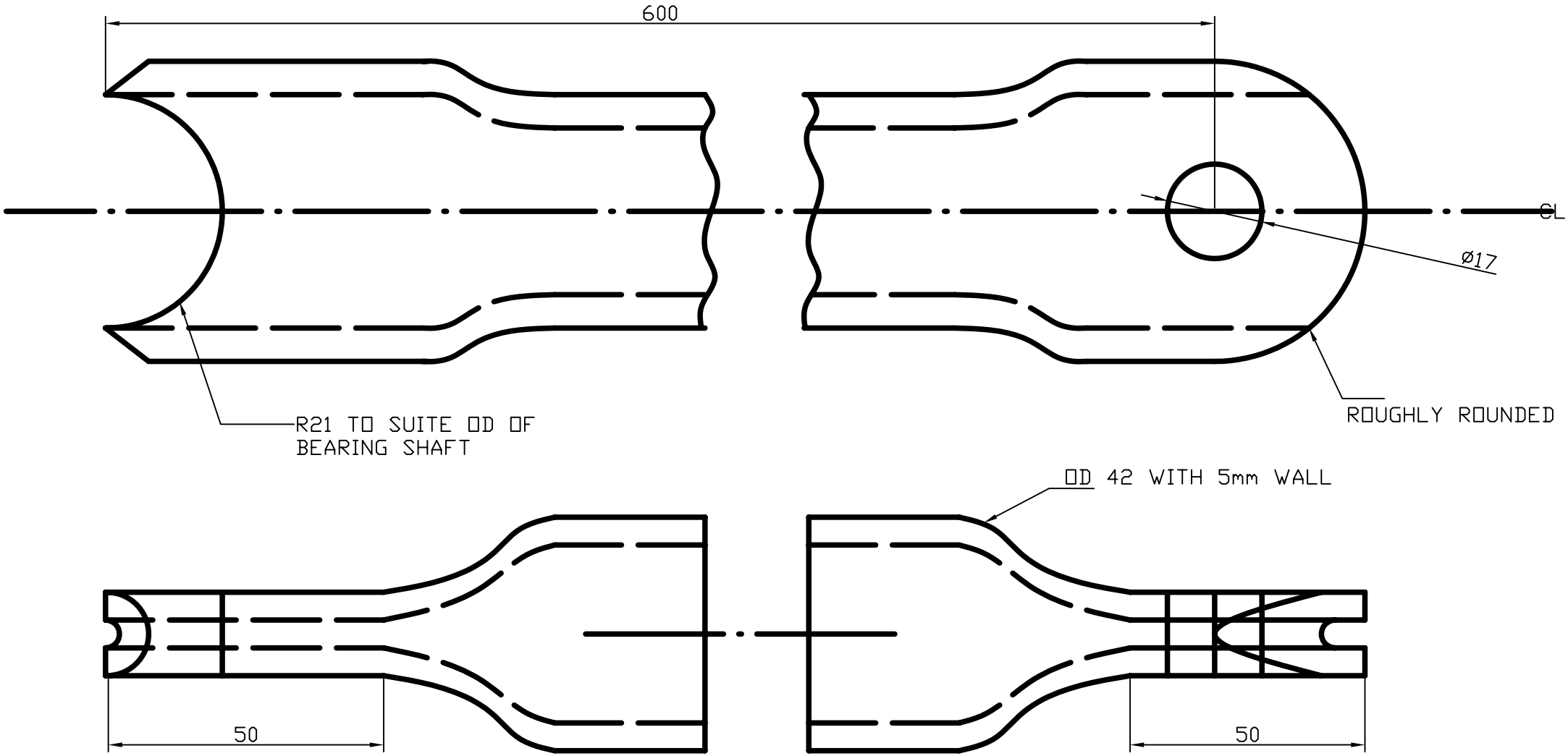

Notes
The lever is made from OD 42 mm tubing - 630mm long. Ends are flattened for a distance of 50.

TOLERANCES
UNLESS OTHERWIS
STATED +/_ 0.25

OPERATING LEVER - MILD
STEEL - OFF

No.	Description	CHK	AP'D	DATE

REVISIONS

Practical Action
www.practicalaction.org
infoserv@practicalaction.org.uk

TITLE SEMI-CONTINUOUS TRAY DRIER	DRAWN A.R	TRACE -	CHK -	NOT TO SCALE
DIMENSIONS IN MM	DRAWING No. TD008			

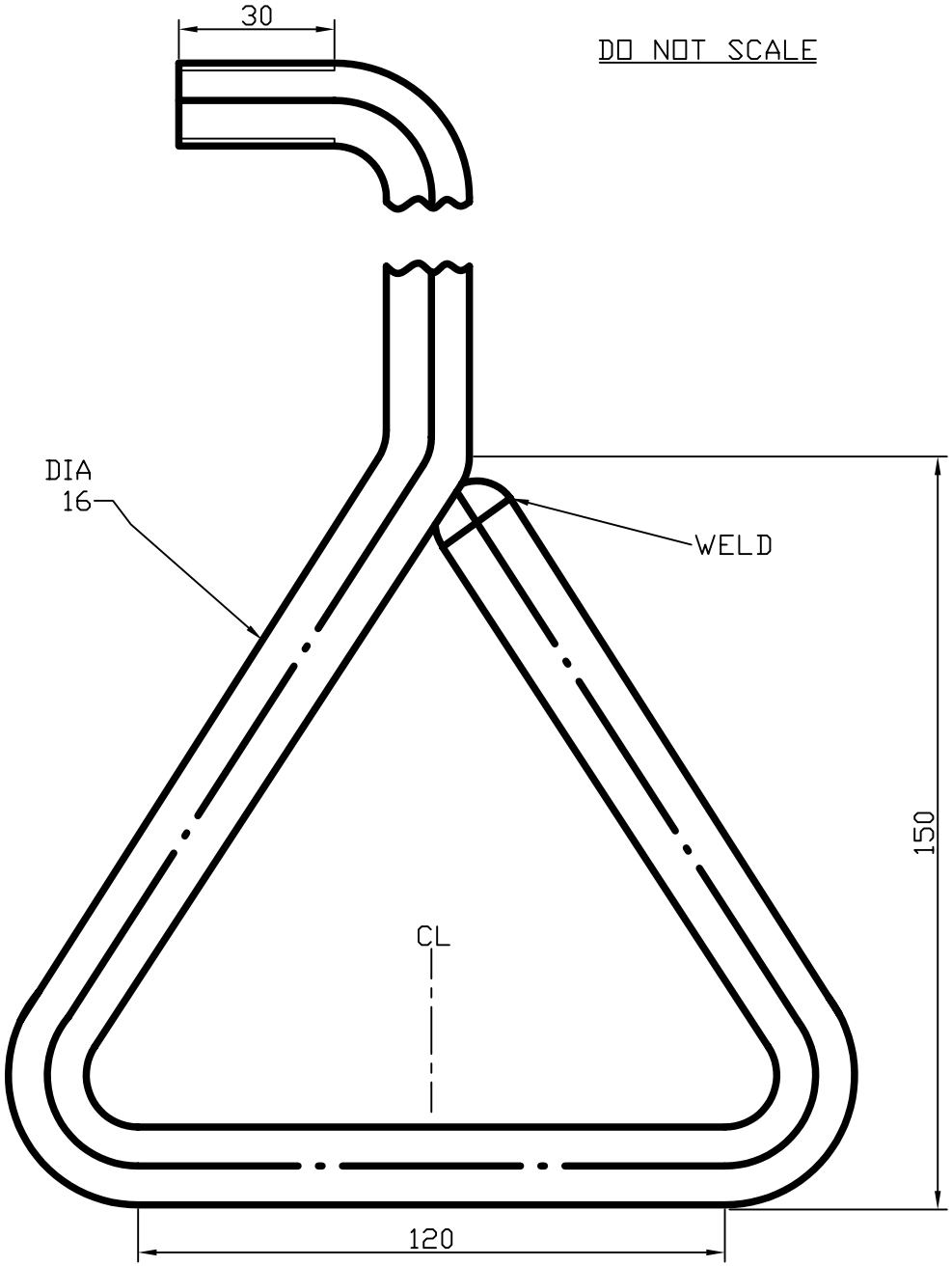

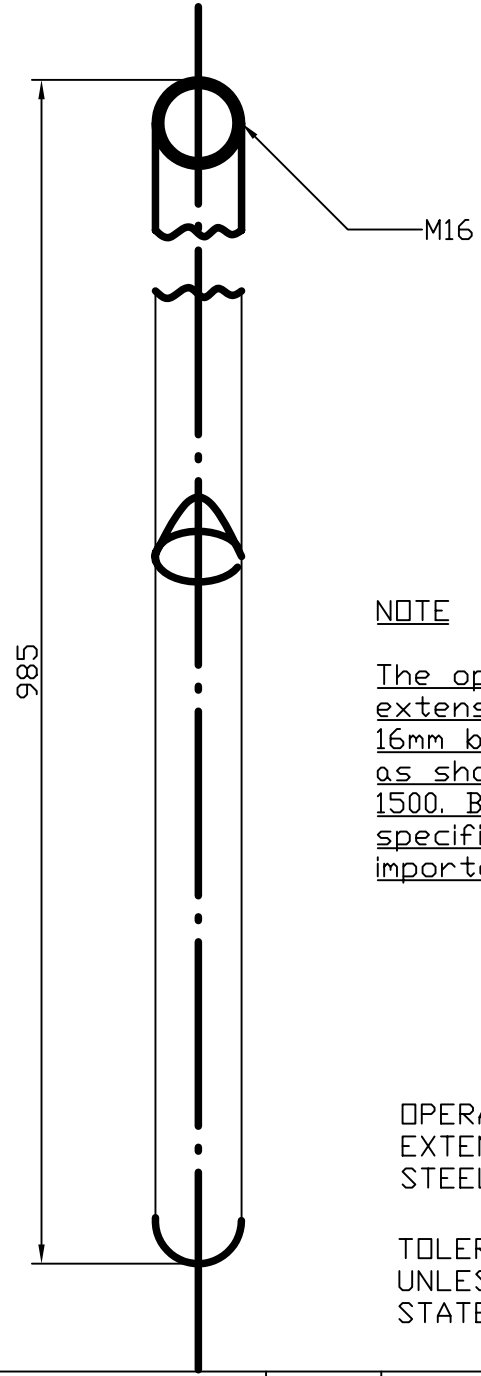

NOTE

The operating lever extension is made from 16mm bar bent and threaded as shown. Bar length approx 1500. Bend radii are not specified as they are not important

OPERATING LEVER HANDLE EXTENSION BAR - MILD STEEL - OFF

TOLERANCES UNLESS OTHERWIS STATED +/_ 0.25

No.	Description	CHK	AP'D	DATE

REVISIONS

Practical Action
www.practicalaction.org
infoserv@practicalaction.org.uk

TITLE SEMI-CONTINUOUS TRAY DRIER	DRAWN A.R	TRACE -	CHK -	NOT TO SCALE
DIMENSIONS IN MM	DRAWING No. TD009			

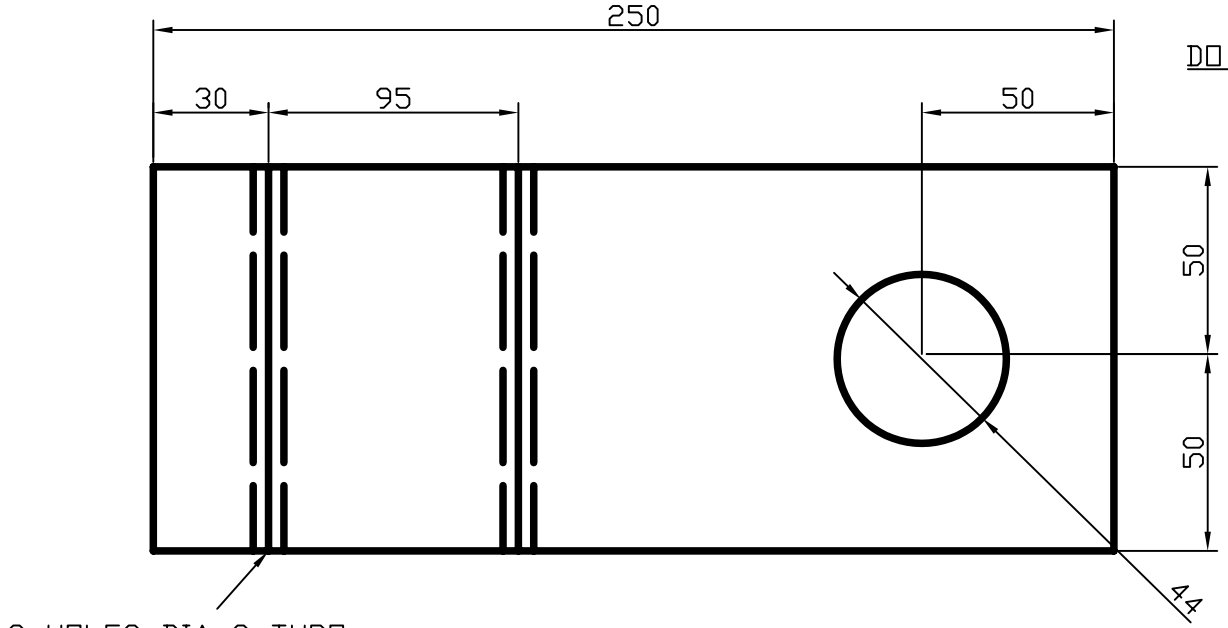

DO NOT SCALE

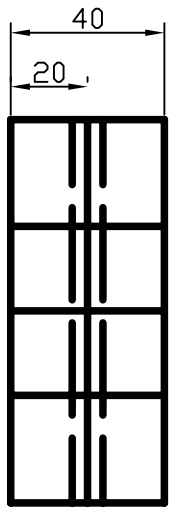

END BEARING - OIL IMPREGNATED HARD WOOD - 4 OFF

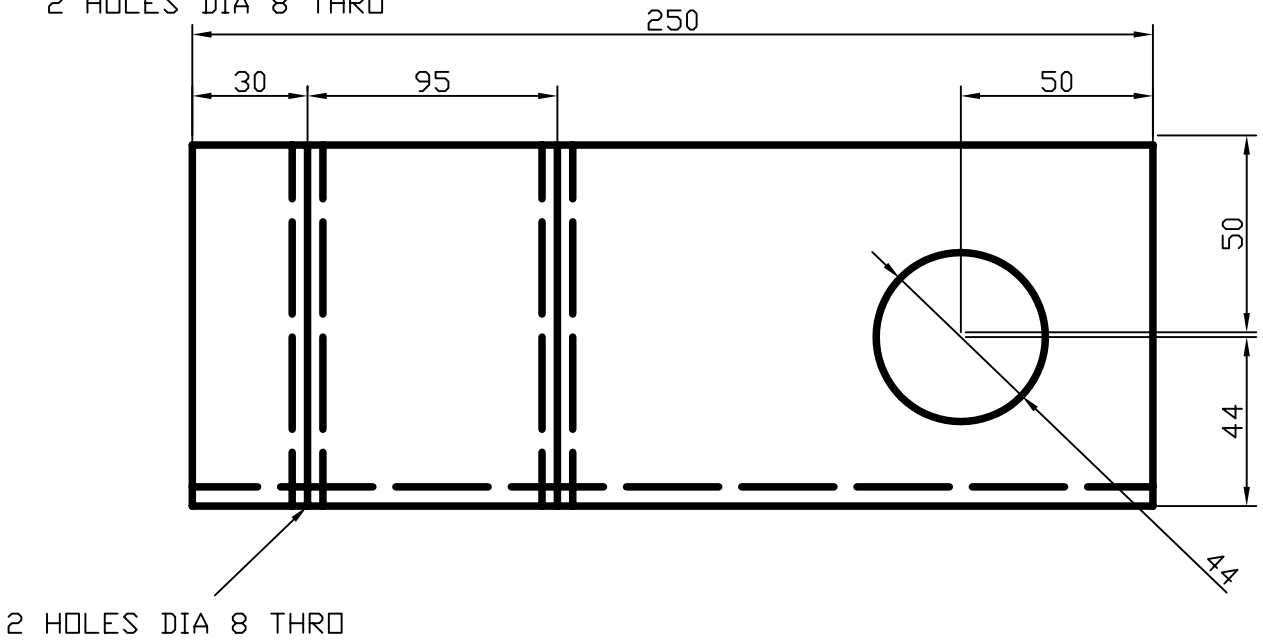

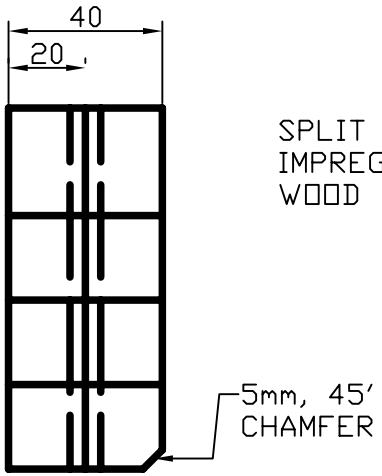

SPLIT BEARING - OIL IMPREGNATED HARD WOOD - 2 OFF

Notes

The bearings are made from oiled hardwood the bore of the 44 dia hole should be waxed before use.
The split bearing must be sawn in half bolted together then have the 44 dia hole drilled

No.	Description	CHK	AP'D	DATE

REVISIONS

Practical Action
www.practicalaction.org
infoserv@practicalaction.org.uk

TITLE SEMI-CONTINUOUS TRAY DRIER	DRAWN A.R	TRACE -	CHK -	NOT TO SCALE
DIMENSIONS IN MM	DRAWING No. TD010			

DO NOT SCALE

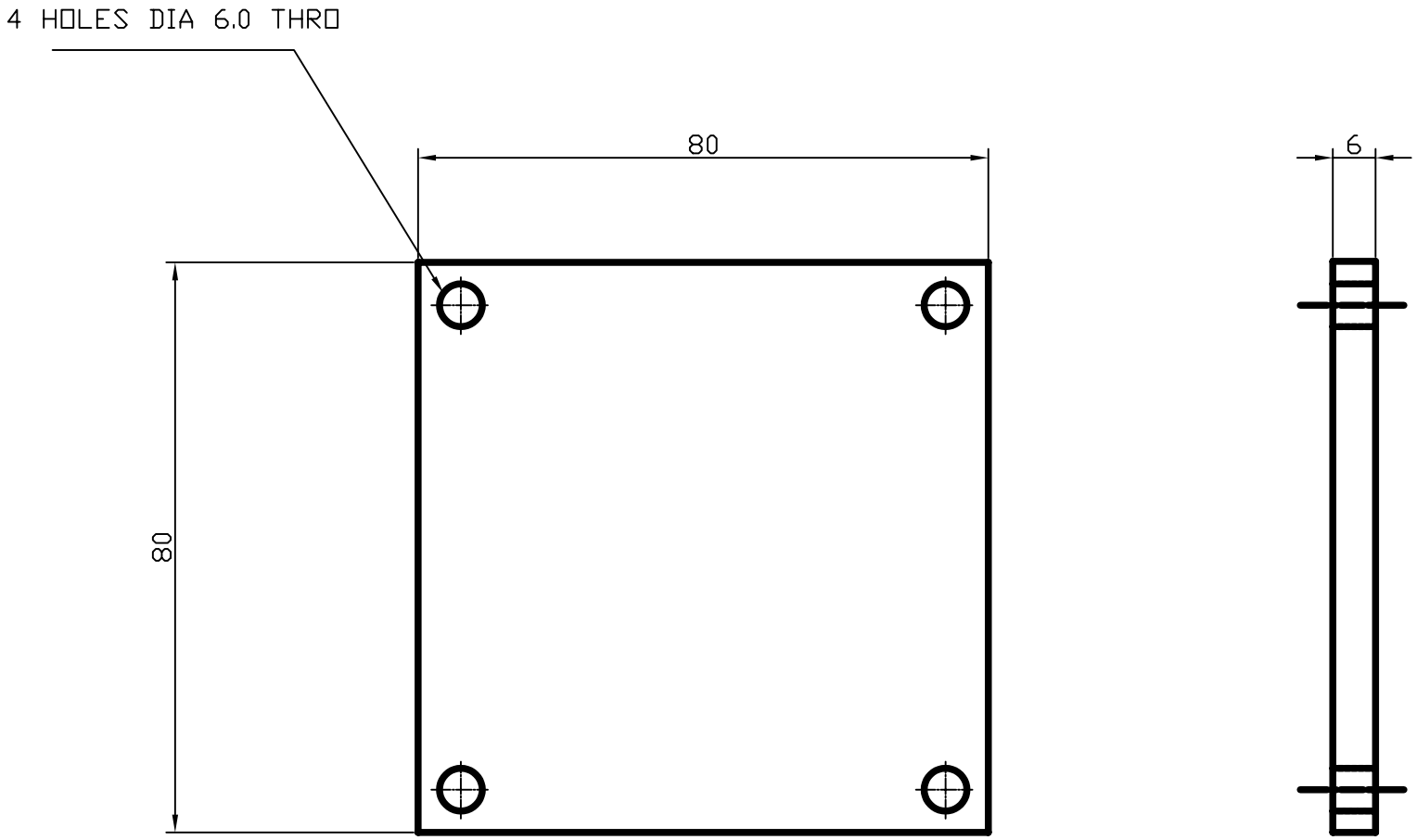

TOLERANCES
UNLESS OTHERWIS
STATED +/_ 0.25

END PLATE - MILD
STEEL - OFF

No.	Description	CHK	AP'D	DATE

REVISIONS

Practical Action
www.practicalaction.org
infoserv@practicalaction.org.uk

TITLE SEMI-CONTINUOUS TRAY DRIER	DRAWN A.R	TRACE -	CHK -	NOT TO SCALE
DIMENSIONS IN MM	DRAWING No. TD011			

DO NOT SCALE

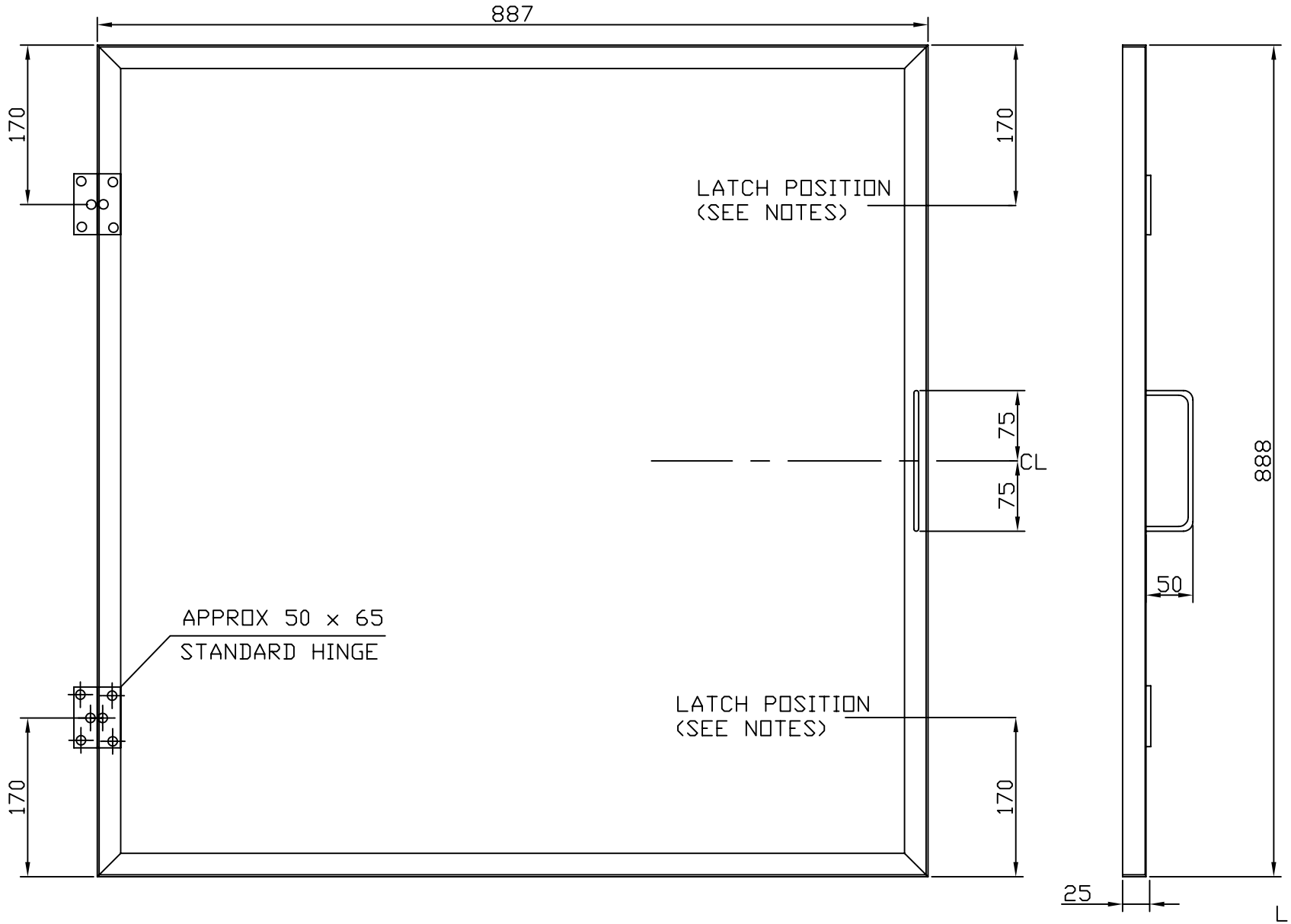

Notes
The cabinet doors are made from a single length of angle iron (shown in drawing) or 4 separate lengths.

The doors are slighly undersize, with playwood overlaps for draught proofing (see TD102)

Latches are mounted on top of the draught strips in the positions indicated in the drawings.

Hinges are track welded to drying cabinet or base (see GA)

LARGE DOOR - MILD STEEL - 1 OFF

No.	Description	CHK	AP'D	DATE

REVISIONS

Practical Action
www.practicalaction.org
infoserv@practicalaction.org.uk

TITLE SEMI-CONTINUOUS TRAY DRIER	DRAWN A.R	TRACE -	CHK -	NOT TO SCALE
DIMENSIONS IN MM	DRAWING No. TD012			

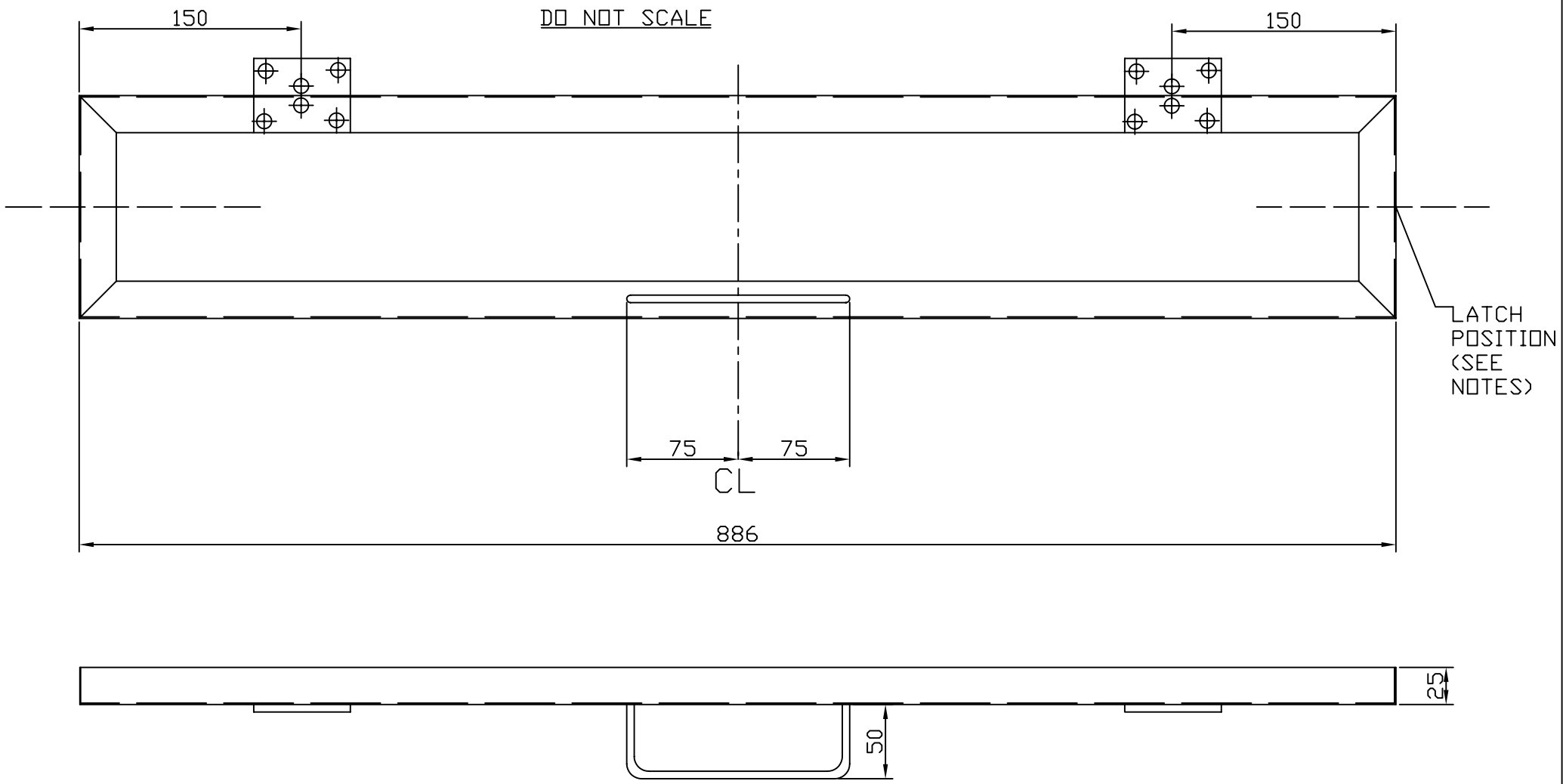

NOTE

REFER TO NOTE ON TD01

SMALL DOOR - MILD STEEL - 2 OFF

No.	Description	CHK	AP'D	DATE

REVISIONS

Practical Action
www.practicalaction.org
infoserv@practicalaction.org.uk

TITLE SEMI-CONTINUOUS TRAY DRIER	DRAWN A.R	TRACE -	CHK -	NOT TO SCALE
DIMENSIONS IN MM	DRAWING No. TD013			

DO NOT SCALE

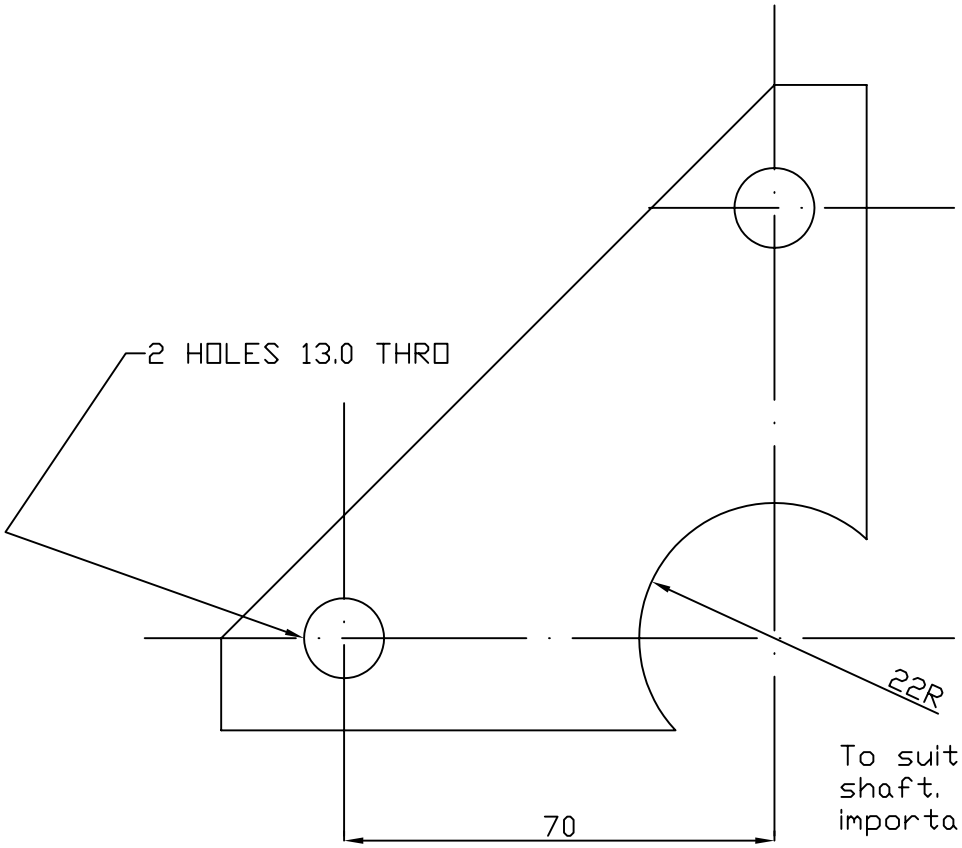

To suite bearing shaft. Profile not important

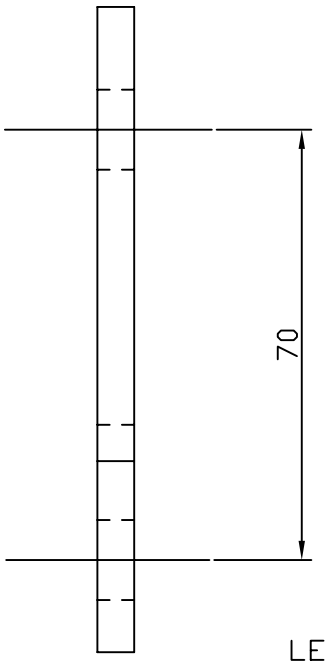

LEVER PLATE
LIFTING
MECHANISM -
MILD STEEL

Notes

The cams translates movement of the operat. handle to the 4 lifting fingers. 4 cams are required and approx 90 x90 6 thick steel plate is used per cam. The only critical dimensions are hole radii and their relative positions.

Where a drill is used to create the 22R half hole it is suggested that a full hole is drilled in a large piece of plate, thus allowing both halves of the hole to be used.

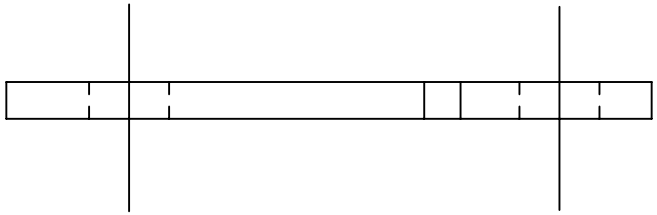

No.	Description	CHK	AP'D	DATE

REVISIONS

Practical Action
www.practicalaction.org
infoserv@practicalaction.org.uk

TITLE TRAY DRYER

DIMENSIONS IN MM

DRAWN	TRACE	CHK
A.R	-	-

DRAWING No. TD014

NOT TO SCALE

DO NOT SCALE

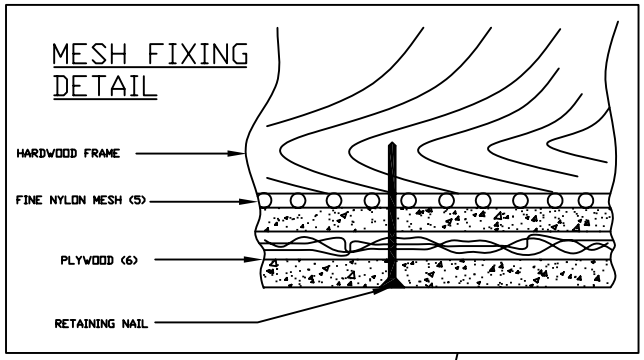

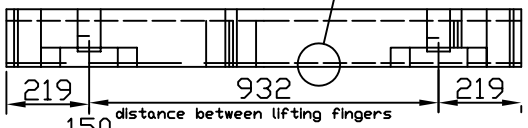

SIDE ELEVATION

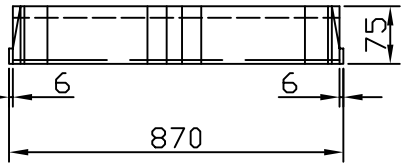

END ELEVATION

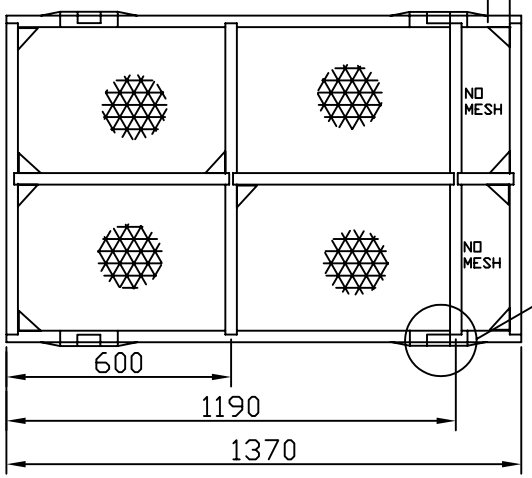

PLAN

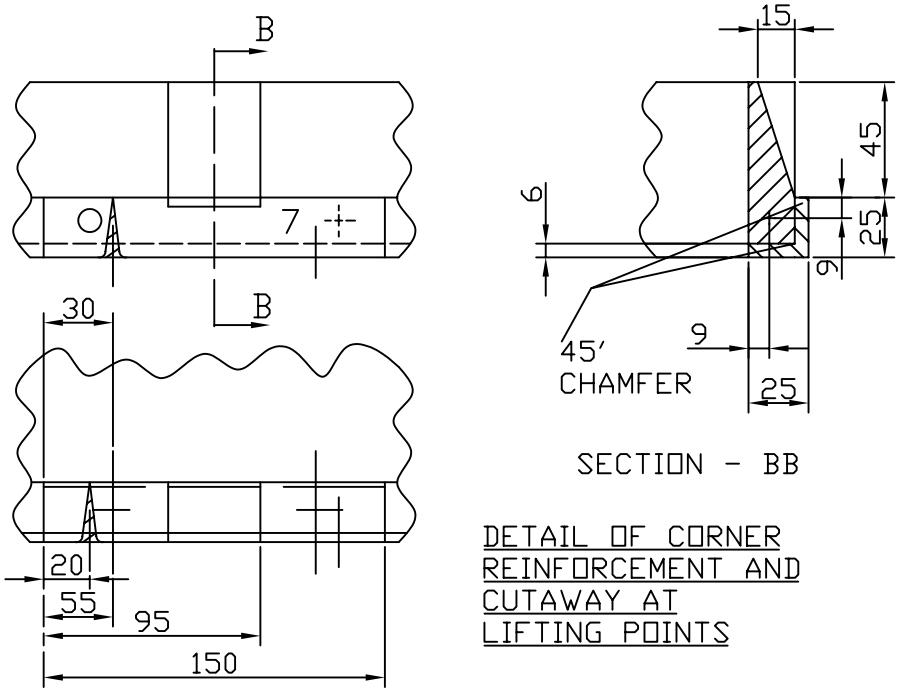

SECTION - BB

DETAIL OF CORNER REINFORCEMENT AND CUTAWAY AT LIFTING POINTS

TRAY - WOOD - 15 OFF

NOTE

The only critical dimensions are overall tray length, width and height and positioning of lifting point reinforcements and cutaways

Parts list and Materials

Frame ends and sides hardwood of 69x19mm section.

1. Ends - 2 lengths of 832
2. Sides - 2 of 1370
3. Dividers - 2 of 832; 1 of 576; 1 of 579; 1 of 159 of 50x19mm
4. Corner strengtheners - 8 of 70x70x69; 2 of 70x70x59
5. Netting - 1 of 1200x860 fine nylon mesh
6. Netting retainers - 6mm Exterior ply 19mmwidth total length of 6922
7. Lifting point reinforcement - 4 of 25x25 angle Iron x150 long
8. Ramp - 8 of 5x60 wedge

Nails and woodscrews as required
1 dryer requires 15 trays

No.	Description	CHK	AP'D	DATE

REVISIONS

Practical Action
www.practicalaction.org
infoserv@practicalaction.org.uk

TITLE TRAY DRYER	DRAWN A.R	TRACE -	CHK -	NOT TO SCALE
DIMENSIONS IN MM	DRAWING No. TD015			

DO NOT SCALE

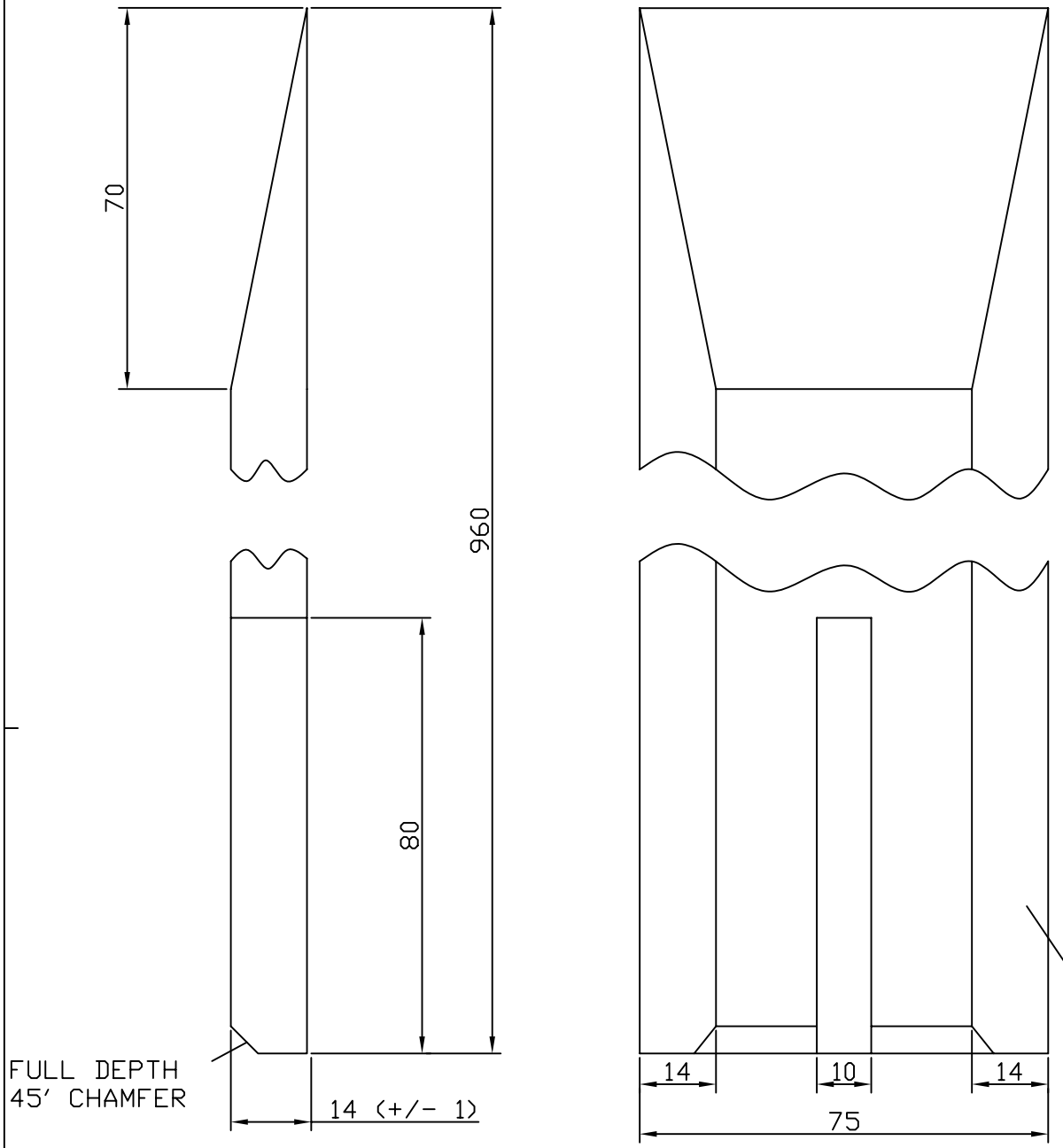

SIDE GUIDES
- WOOD -
4 OFF

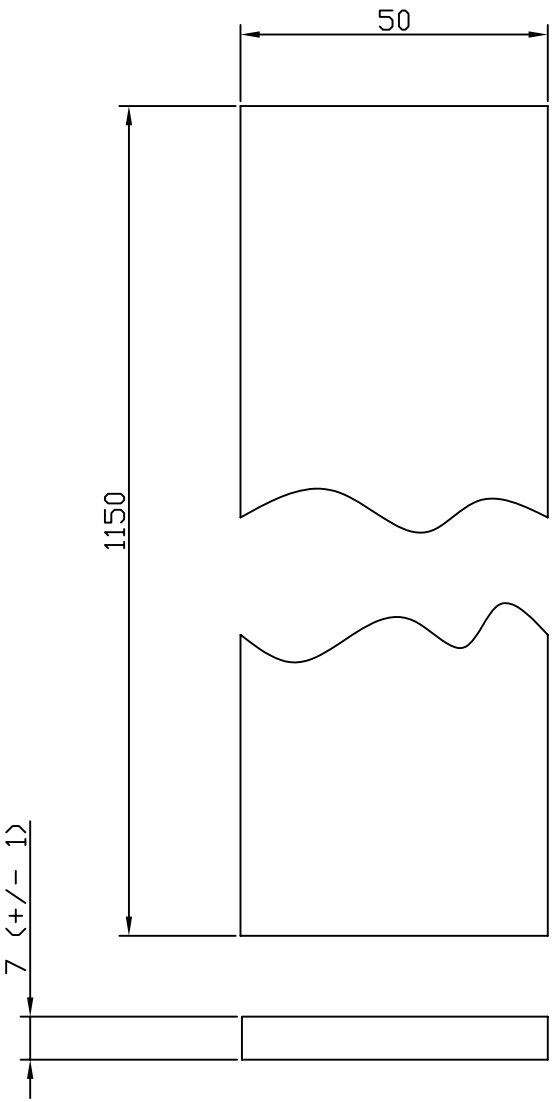

TRAY GUIDES - WOOD - 2 OFF

No.	Description	CHK	AP'D	DATE

REVISIONS

Practical Action
www.practicalaction.org
infoserv@practicalaction.org.uk

TITLE TRAY DRYER

DIMENSIONS IN MM

DRAWN	TRACE	CHK
A.R	-	-

DRAWING No. TD016

NOT TO SCALE

DO NOT SCALE

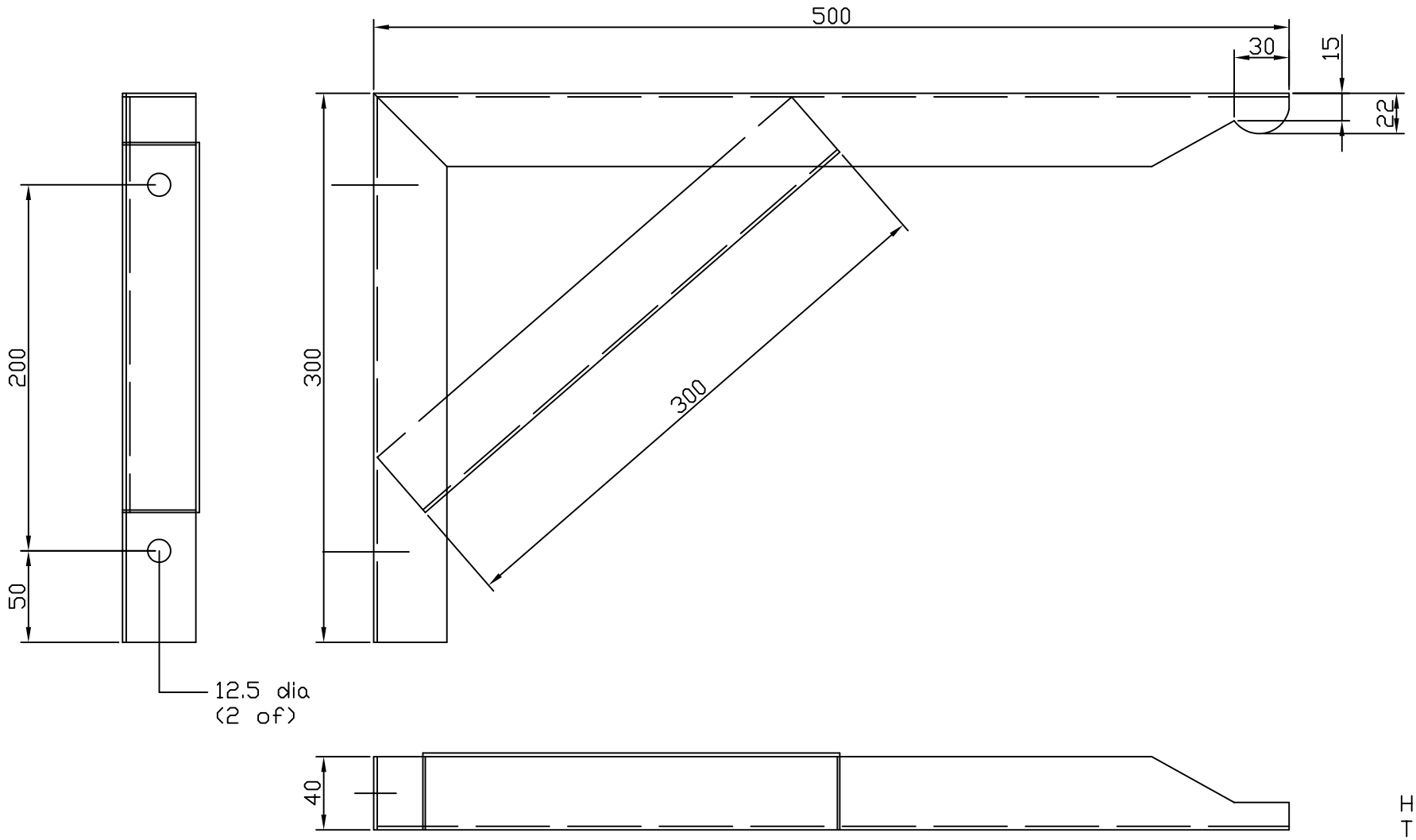

HANDLE FOR
TRAY DRYER -
MILD STEEL -
1 OFF
TOLERANCES
UNLESS OTHERWIS
STATED +/_ 0.25

No.	Description	CHK	AP'D	DATE

REVISIONS

Practical Action
www.practicalaction.org
infoserv@practicalaction.org.uk

TITLE TRAY DRYER	DRAWN A.R	TRACE -	CHK -	NOT TO SCALE
DIMENSIONS IN MM	DRAWING No. TD017			

SFVS Dried Mango 01/02/2011

greencell

Product Specification

Characteristics

Variety

Kent, Keitt

By specific agreement only Tommy Atkins

Other varieties not mentioned may only be used with Greencell approval

Product

Colour	Yellow to dark orange
Description	Sweet chewy slices of dried mango prepared from freshly harvested mango Packed to provide 10 portions per bag
Portion size	1 slice

Any deviation from this must be agreed with Greencell prior to packing

Size

All Varieties

Weight	Average 8g per slice (range 6-10g) **Must be visually uniform in size**

Other Requirements

Added Preservatives	Ascorbic Acid and Citric Acid **Must be Sulphite free**	
Temperature Control	5-10°c	(Optimum storage temperature 1 to 5 c)
Frozen storage / transport	minus 18 - minus 22°c	
Product Life	6 months from date of packing at ambient 15 months from date of packing at minus 18°c	

Defects

Foreign matter	Nil
Taint	Nil
Contaminants	Nil
Pests	Nil
Rots	Nil
Black Discolour	Nil
Out of size parameter	7% by count (2% under + 5% over)
Deterioration	Nil

SFVS Dried Mango 01/02/2011

greencell

Organoleptic Properties

The dried mango slices must be tender, sweet and aromatic with a flavour typical of the variety.

Moisture	13-19%
Appearance	Dried mango slices must be visually uniform in size
Colour	Bright orange pieces free from black blemish or grey discolouration
Shape	Elongated strips (Slices)
Taste	Sweet with a strong mango flavour, low acid
	No off flavours
Texture	Chewy not tough, brittle or soggy

Not acceptable

Dry or brittle
Sour to taste
Off flavours, alcoholic or chemical taint

Microbiology

Standard plate count cfu/g	<10 000
Yeasts and moulds cfu/g	< 1000
Coliforms cfu/g	< 100 cfu/g
E.coli	absent in 10g
Salmonella	absent in 25g

Nutritional analysis

Item	***Per 100g***	***Per***
Energy	1247 kJ	124.7 kJ
Calories	293g	29.3g
Protein	1.6g	0.16g
Carbohydrate	71.1g	7.11g
Of which sugars	57.6g	5.76g
Fat	0.3g	0.03g
Of which saturates	0.11g	0.01g
Fibre	8.9g	0.89g
Sodium	0.064g	Trace
Salt	0.16g	Trace

SFVS Dried Mango 01/02/2011

Technical Specification

Accreditations	**GLOBAL GAP** **HACCP (3rd party accreditation)** **BRC or equivalent (EFSIS, IFS, SQS2000)** ** Technical approval may be authorised **Packed and dried in a nut free facility**
Pesticide Control	All suppliers must comply with the Fresh Produce Consortium Code of Practice Residue levels in the fruit must comply with UK legislation Requirements: A full list of proposed and actual Pre and Post harvest pesticide treatments for the raw material **Proposed** At least 3 months prior to harvest **Actual** Actual usage confirmation prior to supply Fresh Produce Consortium Pesticide undertaking Approved list of growers Positive release residue analysis for each grower and variety prior to supply Microbiological results for each dried batch (lot) prior to supply to a UKAS or equivilent method *For details relating to Greencell's pesticide residue testing policy, please refer to 'Supplier pesticide letter document S31'*
MRL Exceedances	Any consignment found to have a MRL exceedance will be rejected.
Rejections	Fruit arriving outside of the specification for quality or MRL exceedance will be rejected and returned to the supplier. Fruit arriving outside the microbial parameters will be rejected and returned to the supplier.
Genetically Modified	All raw materials to be free from Genenticall Modified materials
Approved Countries	South Africa, Peru, Israel, Puerto Rica
Additional Information	Varieties will change depending on country of origin and season Temporary specifications may be issued from time to time

SFVS Dried Mango 01/02/2011

greencell

Packaging Specification

10 slices packed in food grade plastic bag
100 bags per cardboard carton
Bags and cartons must be labelled with supplier and grower traceability information

Bag

Number of slices per bag	10
Material	Food grade bags
Bag Dimensions	190 x 120.5 mm
Layout	5 a day logo - if available
Closure	Heat seal

Box

Number of bags per box	100		
Material	Closed cardboard carton (no staples or wood)		
Box Dimensions	Fruit size	Box size	Boxes per pallet
	All	39x30x26	70

Labelling
Bag

Label Dimension	110 x 40.5 mm
Positioning	Centrally on reverse of bag

Bag Label Text

School Fruit And Vegetable Scheme
Product
10 PORTIONS
Number of pieces: 10
Ingredients
Country of Origin
Batch code
Best before end
Greencell Ltd
PE11 3UW
www.5aday.nhs.uk
Store in a cool, dry place

School Fruit And Vegetable Scheme
Dried Mango
10 PORTIONS
Number of pieces: 10
Ingredients: Mango (99%), Antioxidants (Ascordbic Acid, Citric Acid)
South Africa
Batch code:
Best before end:
Greencell Ltd
PE11 3UW
www.5aday.nhs.uk
Store in a cool, dry place

Box

Label Dimension	150 x 110 mm
Positioning	On every box, short side on left

Box End Label Text

School Fruit And Vegetable Scheme
Product
100 x 10 PORTIONS
Size code
Ingredients
Country of Origin
Batch code
Best before end
Greencell Ltd
PE11 3UW
www.5aday.nhs.uk

School Fruit And Vegetable Scheme
Dried Mango
100 X 10 PORTIONS
Avg 8g
Ingredients: Mango (99%), Antioxidants (Ascordbic Acid, Citric Acid)
South Africa
Batch code:
Best before end:
Greencell Ltd
PE11 3UW
www.5aday.nhs.uk
Store in a cool, dry place

Store in a cool, dry place

SFVS Dried Mango 01/02/2011

greencell

Pallet Specification

Pallet Integrity
White pallets only
1200 x 1000mm
Minimum loading capacity 1000kg
4 way entry
9 x 100 to 110mm deck boards
5 x bottom boards
9 x intact blocks
Must be strong quality pallets **Product received on inferior quality pallets will be rejected and replaced at cost to the supplier**

Pallet Support
4 corner posts
1 supporting each corner
At least 3 bands of plastic strapping
1 at the top, 1 in the middle, 1 at the bottom

Pallet Labelling

Your lot number / traceability number	Your reference number
Product	Count / Weight / Size
Variety	
Mark	(C)onventional or (O)rganic
Pallet number = Supplier Code+your pallet number	
Number of boxes (Quantity)	
Barcode	

Pallet number must be at least 40mm high

REFER TO GUIDELINES FOR FULL INFORMATION ABOUT CREATING BARCODES

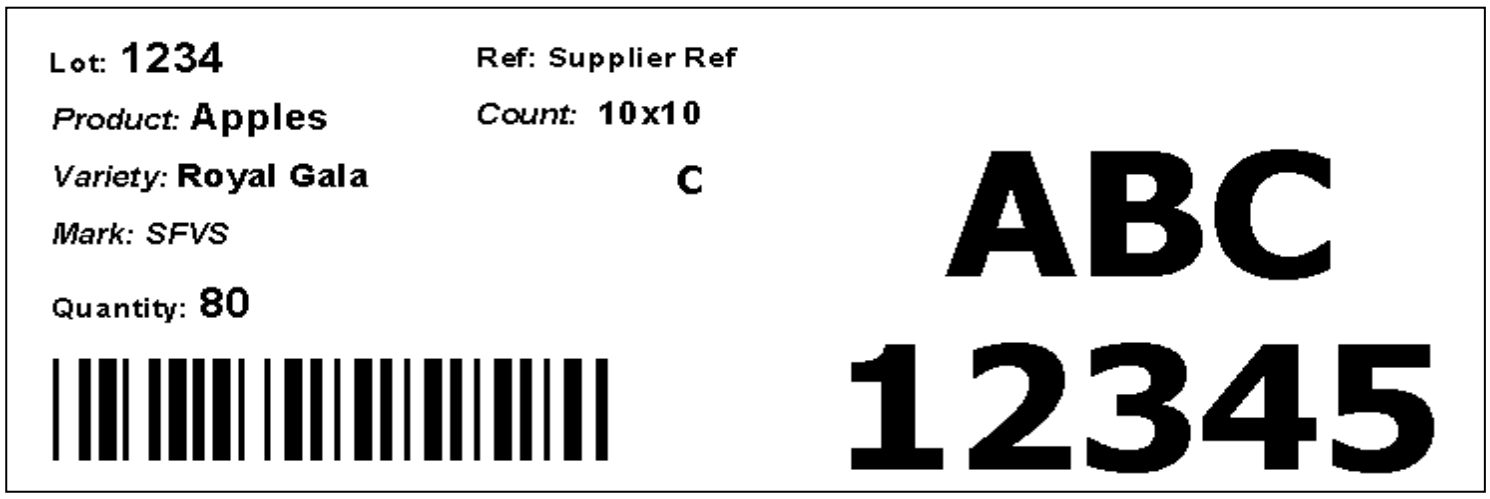

Pallet Label Positioning
4 pallet labels with pallet numbers per pallet - A4 SIZE
Additonal sets of pallet labels per variety per pallet - A4 SIZE
i.e. 1 pallet number per variety

4 Pallet labels - 1 label on every side of pallet
3rd layer from bottom of pallet - right hand side
3rd layer from top of pallet - right hand side
1 LABEL ON BOTH LONG SIDES
1 LABEL ON BOTH SHORT SIDES

Pallets labels attached with adhesive - no staples

Preserved Dried Mango Chunks 20mm to 30mm

Product Specification

Characteristics

Variety

Kent, Keitt
Tommy Atkin by specific agreement
Others varieties will need to be authorised through a sampling trials

Product

Colour	Yellow to dark orange
Description	Sweet chewy chunks of dried mango prepared from freshly harvested mango
Flavour	Fresh, typical of cultivar with no off taints
Micro parameters	Ecah batch to meet micro parameters

Size

Chunk Size	20 to 30mm
Thickness	2mm to 15mm
Tolerance	Maximum 7% of chunks may fall outside the stated size banding

Other Requirements

Added Preservatives	SO_2
Preservative Level	100 to 400ppm SO_2 - distillation method
Temperature Control	5-10°c (Optimum storage temperature 1 to 5 c)
Frozen storage / transport	minus 18 - minus 22°c
Product Life	15 months at 4 to 8 c or 6 months at ambient

Defects

Foreign matter	Nil
Taint	Nil
Contaminants	Nil
Pests	Nil
Rots	Nil
Black Discolour	Nil
Out of size parameter	7% by count : tolerance of 2% oversize and 5% undersize
Deterioration	Nil

Preserved Dried Mango Chunks 20mm to 30mm

Organoleptic Properties

The dried mango slices must be tender, sweet and aromatic with a flavour typical of the variety.

Moisture	13-19% measured using an MX 50 Moisture Analyser
Appearance	Dried mango chunks must be uniform in size
Colour	Bright orange pieces free from black blemish or grey discolouration
Shape	Uniform chunks
Taste	Sweet with a strong mango flavour typicla of cultivar, low acid No off flavours or taints
Texture	Chewy and moist not tough, brittle or soggy

Not acceptable

Dry or brittle
Sour to taste
Off flavours, alcoholic or chemical taint

Microbiology

Standard plate count cfu/g	<10 000
Yeasts and moulds cfu/g	< 1000
Coliforms cfu/g	< 100
E.coli	absent in 10g
Salmonella	absent in 25g

Nutritional analysis

Item	***Per 100g***	***Per***
Energy	1247 kJ	124.7 kJ
Calories	293g	29.3g
Protein	1.6g	0.16g
Carbohydrate	71.1g	7.11g
Of which sugars	57.6g	5.76g
Fat	0.3g	0.03g
Of which saturates	0.11g	0.01g
Fibre	8.9g	0.89g
Sodium	0.064g	Trace
Salt	0.16g	Trace

Preserved Dried Mango Chunks 20mm to 30mm

Technical Specification

Accreditations	**GLOBAL GAP** **HACCP (3rd Party Accreditation)** **BRC or equivalent (EFSIS, IFS, SQS2000)** **Technical approval may be authorised **Packed and dried in a nut free facility**
Pesticide Control	All suppliers must comply with the Fresh Produce Consortium Code of Practice Residue levels in the fruit must comply with UK legislation Requirements: A full list of proposed and actual Pre and Post harvest pesticide treatments for the raw material **Proposed** At least 3 months prior to harvest **Actual** Actual usage confirmation prior to supply Fresh Produce Consortium Pesticide undertaking Approved list of growers Positive release residue analysis for each grower and variety prior to supply Microbiological results for each dried batch (lot) prior to supply to a UKAS or equivilent method *For details relating to Greencell's pesticide residue testing policy, please refer to 'Supplier pesticide letter document S31'*
MRL Exceedances	Any consignment found to have a MRL exceedance will be rejected.
Micro Exceedances	Any consignment found to exceed micro parameters
Rejections	Fruit arriving outside of the specification for quality or MRL exceedance will be rejected and returned to the supplier. Fruit arriving outside the microbial parameters will be rejected and returned to the supplier.
Genetically Modified	All raw materials to be free from Genenticall Modified materials
Approved Countries	South Africa, Peru, Mexico, Ghana
Additional Information	Varieties will change depending on country of origin and season Temporary specifications may be issued from time to time

Preserved Dried Mango Chunks 20mm to 30mm

Packaging Specification

Blue coloured food grade plastic bags
5 x 2.5kg plastic bags per carton
Cartons must be labelled with supplier and grower traceability information

Bag

Weight per bag	2.5kg net (+ Adequate tare for weight loss)
Material	Food grade bags
Bag Dimensions	360mm x 450mm
Closure	Heat seal

Box

Number of bags per box	5
Material	Closed cardboard carton (no staples or wood)
Box Dimensions	250mmx390mmx290mm

Bag Label Text
Product batch code

Box
Label Dimension
Positioning — Centrally on every box

Box End Label Text

Product
2.5kg x 5
Size code: 20 to 30mm
Ingredients
Country of Origin
Batch code / traceability codes
Best before end
Supplier Name and address

Store in a cool, dry place

Preserved Dried Mango Chunks 20mm to 30mm

Pallet Specification

Pallet Integrity
White pallets only
1200 x 1000mm
Minimum loading capacity 1000kg
4 way entry
9 x 100 to 110mm deck boards
5 x bottom boards
9 x intact blocks

Must be strong quality pallets

Product received on inferior quality pallets will be rejected and replaced at cost to the supplier

Pallet Support
4 corner posts
1 supporting each corner
At least 3 bands of plastic strapping
1 at the top, 1 in the middle, 1 at the bottom

Pallet Labelling

Your lot number / traceability number	Your reference number
Product	Count / Weight / Size
Variety	
Mark	(C)onventional or (O)rganic
Pallet number = Supplier Code+your pallet number	
Number of boxes (Quantity)	
Barcode	

Pallet number must be at least 40mm high

REFER TO GUIDELINES FOR FULL INFORMATION ABOUT CREATING BARCODES

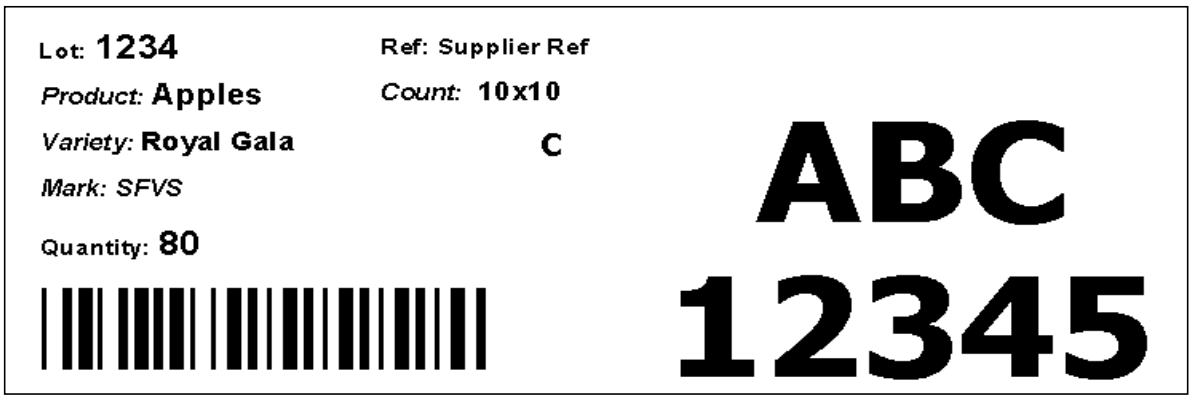

Pallet Label Positioning
4 pallet labels with pallet numbers per pallet - A4 SIZE
Additonal sets of pallet labels per variety per pallet - A4 SIZE
i.e. 1 pallet number per variety

4 Pallet labels - 1 label on every side of pallet
3rd layer from bottom of pallet - right hand side
3rd layer from top of pallet - right hand side
1 LABEL ON BOTH LONG SIDES
1 LABEL ON BOTH SHORT SIDES

Pallets labels attached with adhesive - no staples