PN-ACG-347

Burns and Roe Enterprises, Inc.

Technical Report

IMPROVEMENT OF THE BISHKEK POWER PLANT AND DISTRICT HEATING SYSTEM

AND

IMPROVEMENT OF THE ELECTRICAL TRANSMISSION AND DISTRIBUTION SYSTEM FOR THE KYRGYZ REPUBLIC

KYRGYZSTAN

FINAL REPORT

November 1995

Prepared by	Burns and Roe Enterprises, Inc
In Collaboration with	American Electric Power Energy Services, Inc Energy Advisory Group, TA-CIS
Submitted to	U S Agency for International Development The Government of Kyrgyzstan The World Bank
Contract No	CCN-0002-Q-00-3154-00 Energy Efficiency and Market Reform Project Delivery Order No 7, Task 1 and 2

TABLE OF CONTENTS

	PAGE
ACKNOWLEDGEMENT	i
ABBREVIATIONS	ii
WEIGHTS AND MEASURES	iii
EXECUTIVE SUMMARY	ES
1 0 INTRODUCTION AND OBJECTIVES	1-1
1 1 Local Utility Organization	1-3
2 0 BISHKEK POWER PLANT, DISTRICT HEATING AND ELECTRICAL T&D PROJECTS	2-1
2 1 Priority Recommendations for the Improvement of Bishkek TES, DH System, ET&D	2-1
2 1 1 TES-1 Rehabilitation Program	2-2
2 1 2 BDHE Rehabilitation Program	2-12
2 1 3 Electrical T&D Rehabilitation Program	2-16
2 2 Load Forecast, Electrical and District Heating	2-35
2 3 Economic Analysis	2-45
2 3 1 Economic Analysis Model Description	2-45
2 3 2 Description of Study Cases	2-49
2 3 3 Modeling Assumptions and Parameters	2-51
2 3 4 Summary of Results	2-64
2 4 Evaluation of Decentralized Alternatives to District Heating	2-70
2 4 1 Electric Resistance Heating	2-70
2 4 2 Decentralized Gas Heating	2-73
2 4 3 Summary of Decentralized Heating Options	2-75

TABLE OF CONTENTS

		PAGE
2 5	*Environmental Assessment for TES, BDHE and ET&D*	2-80
2 5 1	*Impact from Continued Operation of the Existing Facility*	2-80
2 5 2	*Potential Impact Anticipated During Implementation of the Proposed Refurbishment Project*	2-89
2 5 3	*Potential Impact Resulting from the Completion of the Proposed Refurbishment Project and Continued Operation of the Facility*	2-90
2 5 4	*Mitigating Measures to be Implemented During Refurbishment of TES-1, the District Heating, and T&D Systems*	2-94
2 5 5	*Recommendation for Future Investment Considerations*	2-97
2 6	*Project Implementation Plan*	2-100
2 7	*Other Priority Cost Item, TES-1*	2-121
3 0	**DESCRIPTION AND TECHNICAL EVALUATION OF EXISTING BISHKEK TES AND BDHE SYSTEM**	3-1
3 1	*Bishkek, TES and BDHE Systems*	3-1
3 1 1	*Background*	3-1
3 1 2	*Bishkek District Heating System*	3-5
3 2	*Condition Assessment of Existing TES and BDHE System Components and their Performance Evaluation*	3-7
3 2 1	*Assessment of Steam Boilers and their Auxiliaries*	3-7
3 2 2	*Assessment of Steam Turbines/Generators and their Auxiliaries*	3-21
3 2 3	*Material and Energy Balances for the CHP Plant and DH System*	3-66
3 2 4	*Assessment of Air Pollution Control System*	3-73
3 2 5	*Assessment of Coal Handling System*	3-77
3 2 6	*Assessment of Other Plant Systems*	3-79
3 2 7	*Assessment of Plant Instruments and Controls (I&C)*	3-80

TABLE OF CONTENTS

		PAGE
	3 2 8 Assessment of DH System and Pumping Stations	3-93
	3 2 9 Assessment of Industrial Steam Supply System	3-98
3 3	*Comparison of the Bishkek Energy System with Other Similar Systems in the Kyrgyz Republic*	3-106
	3 3 1 Assessment of the City of OSH TES and District Heating System	3-106
	3 3 2 Assessment of Steam Boilers and their Auxiliaries	3-109
	3 3 3 Assessment of Steam Turbine Generators and their Auxiliaries	3-111
	3 3 4 Assessment of OSH District Heating System	3-112
4 0	**ELECTRICAL TRANSMISSION AND DISTRIBUTION SYSTEM**	4-1
4 1	*Introduction*	4-1
4 2	*Electric Power Demand and Energy Forecasts*	4-2
	4 2 1 Economy	4-2
	4 2 2 Population	4-9
	4 2 3 Electric Energy Consumption	4-14
	4 2 4 Peak Demand	4-22
4 3	*Description of Kyrgyzstan Power Supply System*	4-30
	4 3 1 Generation Facilities	4-32
	4 3 2 EHV and High Voltage Transmission System	4-32
	4 3 3 Interconnections with Neighboring Countries	4-32
4 4	*Transmission System Planning Study*	4-34
4 5	*City of Bishkek Transmission and Distribution System*	4-36
	4 5 1 Description of Existing Transmission and Distribution Facilities	4-36
	4 5 2 Assessment of Physical Condition of Transmission and Distribution Facilities	4-37
	4 5 3 Assessment of Operation of Transmission	4-41

TABLE OF CONTENTS

		PAGE
	and Distribution Facilities-Current Conditions	
	4 5 4 Assessment of Operation of Transmission and Distribution Facilities-Future Conditions	4-49
4 6	*Proposed City of Bishkek Transmission and Distribution System Reinforcement Program*	4-58
	4 6 1 Description of Proposed Reinforcement Program	4-58
	4 6 2 Capital Cost Estimates of Proposed Reinforcement Program	4-64
	4 6 3 Priority of Proposed Reinforcement Projects	4-65
	4 6 4 Proposed Schedule for the Distribution Reinforcement Program	4-68
4 7	*Assessment of Operation of City of Bishkek Transmission and Distribution System Following Reinforcement*	4-69
	4 7 1 Expected Benefits from Implementation of Proposed Reinforcement Program	4-70
4 8	*Rural Area Transmission and Distribution Study*	4-70
	4 8 1 Kalinin Area of the Chu Electric Company	4-71
	4 8 2 Description of Existing Transmission and Distribution Facilities	4-71
	4 8 3 Assessment of Physical Condition of Transmission and Distribution Facilities	4-75
	4 8 4 Assessment of Operation of Transmission and Distribution Facilities-Current Conditions	4-76
	4 8 5 Assessment of Operation of Transmission and Distribution Facilities-Future Conditions	4-84
4 9	*Proposed Kalinin Area Transmission and Distribution System Reinforcement Project*	4-86
	4 9 1 Description of Proposed Reinforcement Project	4-88
	4 9 2 Capital Cost Estimates of Proposed Reinforcement Program	4-90
	4 9 3 Priority of Proposed Reinforcement Program	4-91
	4 9 4 Proposed Schedule of the Distribution Reinforcement Program	4-92

TABLE OF CONTENTS

		PAGE
4 10	*Assessment of Operation of Kalinin Area Transmission and Distribution System Following Reinforcement*	4-92
	4 10 1 Expected Benefits from Implementation of Proposed Reinforcement Program	4-93
4 11	*Extrapolation of Findings to Other Areas of Kyrgyzstan Transmission and Distribution Systems*	4-93
	4 11 1 Northern Kyrgyzstan	4-93
	4 11 2 Southern Krygyzstan	4-97
	4 11 3 Subtransmission and Distribution System	4-100
4 12	*Summary of Proposed Transmission and Distribution System Improvement Program*	4-108

APPENDICES

Appendix I *Bishkek District Heating Rehabilitation Project, by EAG/CARL BRO*
Appendix II *Economic Analysis*
Study Cases 1-4 (Base Assumptions)
Study Cases 1a-4a (Sensitivity DH Load Forecast)
Appendix III *Investment and Debt Service Schedules*
Appendix IV *Heat Source Alternatives for the Bishkek District Heating Sytem Gas and Electrode Mass Boilers*

Appendix A *Kyrgyz Republic and Distribution Company Maximum Load Data*
Appendix B *Bishkek Area Detailed Load Forecast*
Appendix C *Kalinin Area Detailed Load Forecast*
Appendix D *Transmission System Diagrams and One Line Maps*
Appendix E *Assessment of the Condition of the Electrical Facilities Serving the City of Bishkek and the Kalinin Area*
Appendix F *Bishkek Electric Network Substation Distribution Feeder Loads*
Appendix G *Transmission System Performance*

ACKNOWLEDGEMENTS

The efforts of many professionals contributed to this report Burns and Roe would like to thank USAID for providing the funding to make this project a reality and making it possible for the World Bank to use the information in this report to begin their appraisal process for negotiating a loan to cover the implementation of the results

We are also grateful for the support and assistance of the Kyrgyz National Energy Holding Company A debt of gratitude is due to Mr Bolot Botbaev for his invaluable assistance, and to his group of management and technical professionals who worked directly with Burns and Roe Team professionals and whose effort made this project possible In addition, a special thanks to the competent and patient group of men and women who provided interpretation, translation and logistical support during the course of the project

ABBREVIATIONS

CIS	Community of Independent States
KNEHC	Kyrgyz National Energy Holding Company
USAID	U S Agency for International Development
VAT	Value-Added Tax
CCE	Capital Cost Estimate
CHP	Combined Heat and Power
TES	Thermal Electric Station
LHV	Lower Heating Value
DHS	District Heating System
XS	Excess
FD	Forced Draft
ID	Induced Draft
SH	Superheater
OD	Outside Diameter
PA	Primary Air
PC	Pulverized Coal
NDE	Non Destructive Examination
HP	High Pressure
IP	Intermediate Pressure
LP	Low Pressure
PDH	Peaking District Heating Heat Exchanger
HCP	Heat Chargeable to Power
NO_x	Nitrogen Oxides
SO_2	Sulfur Dioxide
ESP	Electrostatic Precipitators
I&C	Instrumentation and Controls
EAG	Energy Advisory Group
HOB	Heat Only Boiler
BDHE	Bishkek District Heating Enterprise
ET&D	Electrical Transmission & Distribution
USD	United States Dollars

WEIGHTS AND MEASURES

ata (atm)	atmosphere of pressure
Gcal	Gigacalorie (10^9 cal)
Tcal	Teracalorie (10^{12} cal)
MW	MegaWatt (10^6 Watt)
kW	kiloWatt (10^3 Watt)
kg	kilogram
kV	kiloVolt
kWh	kiloWatt hour
MWh	Mega Watt hour (10^3 kWh)
GWh	Giga Watt hour (10^6 kWh)
MVAR	Megavolt-Ampere Reactive
kg/cm^2	kilograms per square centimeter
t/h	tons per hour
RPM	Rotations per minute
BTU	British Thermal Unit

CONVERSION FACTORS

$$1 \text{ GCal} = 4\ 187 \text{ GJ} = 3\ 968 \times 10^6 \text{ BTU} = 1{,}163 \text{ kWh}$$

EXECUTIVE SUMMARY

INTRODUCTION

In order to assist the reform process in the Kyrgyz Republic, USAID has sponsored projects which resulted in market-led economic growth, improved public health and well-being, and the establishment of a framework toward a democratic, legal and regulatory environment

In 1994, new projects were identified through cooperation among the agencies of the Kyrgyz Republic, USAID and the World Bank, the projects are as follows

- Improvement of Bishkek Power Plant and District Heating system, and
- Improvement of Electrical Transmission and Distribution systems

The immediate purpose of this feasibility study was to address needs of the World Bank by providing information to enable the Bank to begin their appraisal process for negotiating a loan to cover the implementation of the study results In effect, the projects will provide the catalyst to facilitate the Bank's loan approval process

The specific objective of this feasibility study was to examine the possibility of rehabilitating and modernizing the Bishkek Power Plant and District Heating System and Electrical Transmission and Distribution Systems (ET&D) enabling all systems to operate under full market conditions, and providing the customers with a secure energy supply at a reasonable cost

To accomplish the above, a detailed technical evaluation was carried out to evaluate the scope of required rehabilitation work and to uncover any technical obstacles that could impede the rehabilitation process An economic evaluation was conducted to quantify the benefits of the proposed rehabilitation projects and to assess economic obstacles that may exist to render the investments not viable, such as an unacceptable internal rate of return and marginal rehabilitation benefits

The Burns and Roe Team consisting of Burns and Roe, the Energy Advisory Group (EAG) and AEP Energy Services, Inc undertook parallel studies to examine the technical and economic feasibility of rehabilitating the electric generation, process steam and district heating systems currently serving the City of Bishkek and Electrical Transmission and Distribution (ET&D) Burns and Roe's work focused on rehabilitation and modernization of the Bishkek Combined Heat and Power Plant and Industrial Steam system, the Energy Advisory Group work focused on the District Heating system, and AEP Energy Services focused on ET&D

In the case of Bishkek Power Plant (TES-1) and the Bishkek District Heating Enterprise System (BDHE), a feasibility analysis has been carried out comparing the scenario where no investments are made with scenarios where rehabilitation investments are made with and without system expansion

In addition, decentralized heating options were examined by introducing electrical resistance heat and gas heat and comparing these results with district heating rehabilitation cases to establish the least cost recommendation

FINDINGS

A detailed investigation has revealed the following technical, economic and environmental problems for TES-1, BDHE and ET&D

- Major TES-1 equipments (boilers, turbine-generators, auxiliaries, I&C, fuel handling, environmental monitoring) require upgrade and rehabilitation
- Low quality coal (high ash content) used as major fuel
- Deteriorating plant efficiency has negative environmental impact
- Poor preventive maintenance due to lack of funds
- Extensive water and heat losses at the BDHE, in addition to inflexible load dispatching and constant flow operation The above contributes in lowering the efficiency of the distribution system
- Insufficient revenues to cover operating costs
- Inefficient "end use" of energy due to consumer behavior (excessive energy consumption - inability of consumers to control and regulate space heating)
- Poor condition and obsolescence of the electrical underground network
- Critical condition and overloading electrical transmission system, including transformers supplying the distribution grid
- Obsolete, overloads and poorly maintained power transformers, including transformers leaking oil
- High electrical energy losses
- Highly stressed electrical equipment resulting from slow-acting protection schemes

Furthermore, the present tariff system and the artificially low energy prices leave no incentive for energy conservation by end users At present the supplier of energy is politically forced to subsidize the consumers This is not a sustainable situation as it has driven the utility organization effectively into bankruptcy This will seriously jeopardize the efforts to develop a modern and well functioning energy supply organization

RECOMMENDATIONS

The evaluation of TES-1, BDHE and ET&D systems has revealed a great and immediate need for rehabilitation, restructuring and modernization The consultants have found that it is technically and economically feasible to transform the present energy system to a modern system capable of operating under market conditions in competition with other energy supply systems

Based on the work performed by Burns and Roe Team, a number of specific recommendations for improving performance, together with estimates of capital costs, have been developed and presented

The following rehabilitation recommendations are made

(1) Rehabilitation of the Bishkek Combined-Heat-and Power (CHP) plant, TES-1

- Refurbish of boilers 14 through 20
- Complete the installation of a 90-MW turbogenerator 11
- Upgrade the instrumentation and control equipment
- Installing emission monitoring devices and environmental testing equipment
- Other plant system upgrades (compressors and coal handling)
- Install equipment for environmental upgrade

(2) District Heating (DH) system rehabilitation

- Replace corroded network sections (approximately 12 5 km) and reinsulate aerial sections (approximately 7 km)
- Install variable speed pump drivers to convert the system to variable-flow operation from the present constant-flow/variable temperature operation
- Modernize of substations including installation of automatic control system and flow meters

(3) Electrical Transmission and Distribution System (ET&D)

- Construction of a new 220/110 kV Ala Archa substation to improve power supply to Bishkek and reduce losses
- Integrate the 220 kV network at the Chuiskaia substation through installation of 220/110 kV transformation
- Improve transformer protection at twelve 110 kV substations
- Upgrade the substations of Orto Alysh (110/35/10 kV), Selectro (35/10kV), Novo-Troickaia (110/35/10 kV) and Selekcionnaia (110/10 kV)
- Provide metering equipment, tools, and spare parts

Project Improvement Benefits and Cost

TES-1

Following improvement benefits will be realized by implementing the recommended rehabilitation program

Improvement Benefits

Characteristic	Without Rehabilitation	With Rehabilitation	Percent Improvement
Net Available Electric Capacity (MW_e)	558	648	16 1%
Net Available Thermal Capacity (Gcal/hour)	758	914	20 6%
Increase in Plant Availability	-	10 to 12%	10 to 12%
Boiler Efficiency (%)	87 50%	89 50%	2 0%
O & M Costs ($/year, Year 2000)	$13,880,000	$12,060,000	13 1%

Rehabilitated portions of the plant will gain 15 years in Life Extension

TES-1 Project cost for recommended rehabilitation plan

Project Base Cost

Component	Foreign Cost, USD	Local Cost, USD	Total Cost, USD
Boiler Rehabilitation	$2,858,000	$945,000	$3,803,000
Turbine Rehabilitation	$4,525,000	$3,740,000	$8,265,000
I&C, Environmental, and Other Plant Systems	$4,393,000	$1,265,000	$5,658,000
TOTAL	**$11,776,000**	**$5,950,000**	**$17,726,000**

BDHE

Following improvement benefits will be realized by implementing the recommended rehabilitation program

Improvement Benefits

Characteristic	Without Rehabilitation	With Rehabilitation	Percent Improvement
Network pipe heat losses [TJ/year]	2290	1500	35%
Pumping power consumption [MWh/y]	21754	14469	33%
Water losses due to leaks [million m^3/year]	24 5	17 5	29%
Manpower demand [operational staff]	433	378	13%
Heat consumption [TJ/year] due to improved controls (Variable Flow)	9536	9248	3%

Rehabilitated portions of Bishkek District Heating Enterprise will gain 20 years in life extension

BDHE Project cost for recommended rehabilitation plan

Project Base Cost

Component	Foreign Cost, USD	Local Cost, USD	Total Cost, USD
Underground pipes	$8,970,000	$3,620,000	$12,590,000
Aerial pipes	$0	$910,000	$910,000
Pumping stations	$1,150,000	$10,000	$1,160,000
SCADA system	$755,000	$35,000	$790,000
Substations	$8,850,000	$900,000	$9,750,000
Total	**$19,725,000**	**$5,475,000**	**$25,200,000**

ET&D

Following improvement benefits will be realized by implementing the recommended rehabilitation program

Improvement Benefits

Characteristic	With Rehabilitation
Reduction in Transmission Power Losses (MWe)	12 2
Annual Energy Savings from Reduced Transmission Power Losses (GWh/Yr)	49 2
Valuation of Energy Savings from Reduced Transmission Power Losses ($/Yr)	$1,378,000
Increase in Installed Transformer Capacity (Nameplate MVA)	448
Transformer Capacity Available for Relocation to Other Substations (Nameplate MVA)	54
Improved Reliability of Bishkek Power System	Second 220/110 kV Supply to City Avoided Transformer and Line Overloads Relaying and Protection Upgrades
Improved Maintenance Scheduling	Replacement of transformer 110 kV disconnect switches with circuit breaker minimizes disruption to nearby substations and customer outages
Improved Maintenance Practices, Safety and Customer Service Reliability	Tools, Training and Spare Parts Inventory
Improved Demand and Energy Metering and Revenue Enhancement ($/year)	$4,416,000 Metering installation/improvements to facilitate accurate bill preparation and collection

ET&D Project cost for recommended rehabilitation plan

Project Base Cost

Component	Foreign Cost, USD	Local Cost, USD	Total Cost, USD
Ala Archa Project (New Station	$9,532,000	$1,261,000	$10,793,000
Chuiskaia Project (New Station)	$1,906,000	$365,000	$2,271,000
Addition of 110 kV Circuit Breakers	$3,116,000	$338,000	$3,454,000
Orto Alysh Project	$1,012,000	$232,000	$1,244,000
Selectro Project	$426,000	$51,000	$477,000
Selekccionnaia Project	$1,079,000	$251,000	$1,330,000
Novo-Troickaia Station Upgrade	$1,837,000	$79,000	$1,916,000
Meters, Tools, and Spare Parts	$3,100,000	$100,000	$3,200,000
Total	**$22,008,000**	**$2,677,000**	**$24,685,000**

LOAD FORECAST

The economies of all five central Asian republics including Kyrgyzstan are in a state of transition due to the collapse of the former Soviet Union Disruptions in fuel supplies between the republics, industrial plant closures, skilled labor migration and other changes have created a difficult environment for the businesses and industries to function, which has contributed to drastic reduction in industrial energy demand The industrial energy consumption has dropped by more than 40 percent during 1991-94 period The population has shifted to electricity for household heating and cooking needs due to the low relative price of electricity and government policies encouraging of the switch, compounded by the lack of natural gas supplies and inadequacy of the existing district heating system as a heat source The high electrification rate in Kyrgyzstan has fueled the rapid switch to electricity for heating and cooking All these factors contribute to significant uncertainties in projecting future electric and thermal demand over the next decade

Burns and Roe believes that energy consumption in Bishkek has reached its bottom and is unlikely to fall further In the short term (next two years), the trend in increased use of electricity for residential heating due to the inadequacy of hot water heating supply may continue, but it is anticipated that once the Bishkek district heating system is rehabilitated and modernized, this trend will reverse itself Of course, the gradual increase in energy prices will dampen the demand and will encourage energy conservation by the population

The following Most Probable Electric Load Forecast and District Heating Load Forecast were developed and used in the recommended TES-1 and BDHE case

Most Probable
Electric Load Forecast

CITY OF BISHKEK			TRANSFERS*		TOTAL FORECAST			
Year	Max Demand (MW)	Sales (GWH)	Max Demand (MW)	Sales (GWH)	Max Demand (MW)	Sales (GWH)	T&D Losses %	Generation (GWH)
1995	425	1002	100	350	525	1352	12	1536
1996	436	1052	102	357	538	1409	12	1601
1997	446	1094	104	364	550	1458	12	1657
1998	456	1127	107	375	563	1502	11	1688
1999	466	1161	109	382	575	1543	11	1734
2000	476	1196	111	389	587	1585	11	1781
2001	486	1232	114	399	600	1631	11	1833
2002	496	1269	116	406	612	1675	11	1882
2003	507	1307	119	417	626	1724	10	1916
2004	518	1346	121	424	639	1770	10	1967
2005	527	1386	124	434	651	1820	10	2022

*Power transferred from Bishkek power grid to other northern parts of Kyrgyzstan

Most Probable
District Heating Load Forecast

	Bishkek District Heating System			Local District Heating System		
Year	Maximum Demand (Gcal/hr)	Heat Generation (Tcal/yr)	District Heat Sales (Tcal/yr)	Maximum Demand (Gcal/hr)	Heat Generation (Tcal/yr)	District Heat Sales (Tcal/yr)
1995	900	2667	2000	46	104	94
1996	935	2800	2100	53	120	108
1997	985	2901	2285	0	0	0
1998	968	2841	2273	0	0	0
1999	941	2675	2230	0	0	0
2000	914	2567	2209	0	0	0
2001	888	2535	2188	0	0	0
2002	861	2515	2168	0	0	0
2003	834	2495	2148	0	0	0
2004	803	2475	2128	0	0	0
2005	782	2455	2108	0	0	0

ENVIRONMENTAL ANALYSIS

An environmental screening has determined that this project should be classified as a Category B in terms of its environmental impacts Investments in rehabilitation of the Bishkek CHP plant, TES-1, and the District Heating System Upgrade are expected to h ave a positive impact on emissions from the system A reduction in coal consumption of 5% is predicted following the implementation of this program in the year 2000, when compared to predicted consumption without benefit of the rehabilitation program Emissions of sulfur oxides and particulates are expected to be reduced proportionally (5%) while NO_x emission reduction is expected to be reduced to a somewhat greater extent Reduction in particulate emissions remains an important goal for this project Although replacement of the electrostatic preciptators with higher efficiency units is quite costly, the performance of the existing units can be improved by applying flue gas conditioning technology It has been estimated that particulate emissions can be reduced to 30% of the present emission levels by applying this technology Funding has been requested to reduce particulates emissions by applying flue gas conditioning technology

Funding has been requested for several environmental improvements to the facility These include Continuous Stack Emission Monitoring Systems (CEMS) to monitor plant emissions and Boiler Combustion Analyzers to improve combustion efficiency and reduce pollutant emissions Funding requests have also included costs for programs to mitigate any potential adverse impacts associated with the plant rehabilitation program itself, such as asbestos removal and disposal activities In addition, funding has been requested to improve analytical capabilities by providing modern equipment, such as, Atomic Absorption Spectrometry and Chromotography

Funding for modern analytical testing equipment, for use in monitoring waste water quality and other low level potential sources of pollution has been requested

Environmental impacts associated with continued operation of the plant have been identified These include impacts on Ambient Air Quality and surface water These impacts are further described in the report

Several potentially adverse but not irreversible impacts have been identified Mitigation of these potentially adverse impacts have been addressed in the report

Recommendations for consideration of potential investment in the future include

- Improvement in Wastewater Discharge Quality by Wastewater treatment (Metals and/or Oily Waste Removal)
- Fire Suppression Equipment for the Coal Pile Area
- Improve Ash Disposal Site Operation and Maintenance Procedures
- Completion of Connecting All Boilers to the 300-Meter Stack
- Corrosion Monitoring System for District Heating Piping

Funds have not been allocated for investment in these improvements at this time Adoption of these potential improvements will be considered in the future when additional funding becomes available

ECONOMIC ANALYSIS

The TES-1 plant is a combined heat and power plant and is used to concurrently serve electric, process steam and district heating loads Consequently, the estimates of future production costs require a concurrent modeling of electric, process steam and district heat For this reason, Burns and Roe developed a computer model for projecting future revenue requirements in which production costs (i e , fuel costs) are estimated based on dispatching of electric and thermal supply resources to concurrently serve electric, process steam and district heating loads while minimizing the fuel costs

The purpose of the economic analysis was to examine how the implementation of recommended rehabilitation scheme affects the total cost of supplying electric energy, district heat, and process steam, and whether the proposed investments are the least cost plan for meeting the future needs of the city of Bishkek and surrounding areas

The economic model developed evaluated eight study cases (four base study cases and four sensitivity cases) The four base cases are as follows

(1) No Rehabilitation of TES-1 (CHP) Plant or BDHE and No Integration of BDHE

(2) No Rehabilitation of TES-1 (CHP) Plant but Rehabilitation and Integration of BDHE

(3) Rehabilitation of TES-1 (CHP) Plant but No Rehabilitation or Integration of BDHE

(4) Rehabilitation of both TES-1 (CHP) Plant and BDHE, and Integration of BDHE

For each study case following schedules were developed

- Summary of Costs
- Allocation of Costs
- Partial Tariffs
- Input Data and Assumptions
- Load Forecasts
- Load/Capacity Balances
- Energy Production/Fuel Consumption
- Generating Resource Characteristics
- Investment Schedules

In addition, detailed spreadsheets were developed illustrating the buildup of investment cost for each study case

The Net Present Value (NPV) of annual costs for the base study cases, Case 1, 2, 3 and 4, are presented below

Summary of NPV For Base Study Cases

TES-1 CHP Scenario	District Heating System (BDHE) Scenario	
	No Rehabilitation or Integration	**Rehabilitation and Integration**
No Rehabilitation	**Study Case 1** NPV of Costs (1995 to 2014) = $723 8 million	**Study Case 2** NPV of Costs (1995 to 2014) = $714 2 million
Rehabilitation	**Study Case 3** NPV of Costs (1995 to 2014) = $690 9 million	**Study Case 4** NPV of Costs (1995 to 2014) = $682 0 million

As can be seen from the above table, the least cost approach is the Study Case 4 which includes rehabilitation of both the TES-1 CHP Plant and the Bishkek District Heating System The NPV for Study Case 4 is $682 0 million or $41 8 million less than the "Do Nothing" case, Case 1

A number of factors are found to contribute to the selection of Study Case 4 as the least cost plan, in particular

- Rehabilitation of Bishkek District Heat system piping network results in significant reductions in thermal losses and extends the economic lifetime of the district heating system

- Variable flow operation will reduce power consumption, reduce flow temperatures and facilitate load dispatching

- Automatic regulation, control and monitoring will improve operation and reduce manpower demand

- Substation modernization will facilitate variable flow operation, reduce heat consumption at end user level and reduce return temperatures, which again will increase electric power production at the CHP plant (10pC lower return temperature will increase power production by 1%)

- Energy meters will facilitate modernization of the tariff structure

- Modernization of BDH System enables improved load dispatching and integration of the Local District Heating System into the Bishkek District Heating System, hence some thermal loads which would otherwise be served by heat only boilers, can be served by the more efficient TES-1 CHP plant

- Rehabilitation of Boilers Nos 14 through 20 at the TES-1 CHP plant will reduce fuel consumption as a result of increased boiler efficiency

- Installing TES-1 CHP Turbine No 11 will serve to increase total system electric and thermal capability and thereby defer future capacity additions and investment costs

---

The following table shows an estimated Internal Rate of Return (IRR) for the recommended Case 4

Component	IRR
TES-1 AND BDHE REHAB, BASE CASE	about 30%

In addition, alternatives to District Heating were examined More specifically, decentralized heating approaches were studied using electrical resistance heat and gas heat For decentralized heating approach, a life cycle cost analysis was performed, and clearly the decentralized options are not economical

Scenario	Cost US$
BDHE - Rehab Scenario NPV (1995-2014) Cogeneration Benefit to DH	$194,080,000
Decentralized Electrical Resistance Heat (1995-2014) Life Cycle Cost	$1,041,000,000
Decentralized Gas Heat (1995-2014) Life Cycle Cost	$383,000,000

An economic analysis of the proposed transmission and distribution system reinforcement program was carried out to assess the overall benefit/cost performance The analysis evaluated the expected economic benefits and compared them against the expected financial commitments The evaluation also determined the expected internal rate of return for the transmission and distribution program under consideration

For the transmission and distribution program the costs include capital expenditures and, operation and maintenance expenses associated with the capital expenditures Quantifiable benefits of the proposed program include

- (1) energy savings due to loss reduction,
- (2) avoided costs of new future generation capacity otherwise needed to supply the losses, and
- (3) availability of new power supply capacity resulting from the addition of new facilities and the relocation of freed-up transformer capacity to other existing facilities,
- (4) improved reliability and reduced restoration times following customer service interruptions and
- (5) increased revenues through improved metering systems

Component	IRR
ET&D	about 29 2%

1 0 INTRODUCTION AND OBJECTIVE

The dissolution of the Soviet Union in 1991 resulted in the formation of five new independent republics in Central Asia Kazakstan, the Kyrgyzstan, Uzbekistan, Turkmenistan and Tajikistan Of these, the Kyrgyz Republic stands out through its leadership in implementing economic and democratic reforms

The Kyrgyz Republic has large unexploited energy resources in the form of low-cost hydroelectric power potential (Approx 26000 MWe), coal (Approx 2 billion tons) and, to a lesser extent, natural gas and oil Most of the natural gas and oil consumed in the country is imported and used as fuel in inefficient power and district heating (DH) plants A large advantageous domestic energy resource, however, is the potential for abundant and relatively low-cost hydroelectric generation Existing resources are used to supply internal electricity needs mostly, and to a limited extent export markets The potential markets for export of hydroelectricity has not yet been explored

During the 1990s, there have been dramatic changes in the economy and the energy requirements of the Krygyz Republic The break-up of the former Soviet Union had a monumental effect on the country's economy The transition from a command economy to a market economy has been and will continue to be a painful process for the Kyrgyz Republic Industries, which are no longer subsidized and protected by the former Soviet Union, must be able to survive in a more competitive market place The short-term effect has been dramatic job losses in the industrial sector, with other sectors of the economy being affected to a lesser degree The changing economic base has affected the energy requirements of all consumers in the republic There have been rapid changes in industrial production and electric energy consumption Residential use of electricity for heating and cooking has substantially increased thereby also affecting the electric requirements and patterns of consumption These changes will continue to strongly influence the energy requirements of the Kyrgyz Republic

In order to assist the reform process in the Kyrgyz Republic, USAID has sponsored projects which resulted in market-led economic growth, improved public health and well-being, and the establishment of a framework toward a democratic, legal and regulatory environment

Starting in early 1992, USAID sponsored work in the following areas

(a) Energy efficiency audit of the main district heating system and power plant in Bishkek, including installation of energy efficiency equipment, instruments and controls

(b) Review of the status and planning for the construction of new hydroelectric power capacity at Kambarata The review resulted in identification of potential new 320 MWe and 1900 MW supplies

(c) Provisions of information and training of personnel who would be involved in the

legislative, regulatory and technical functions for the energy sector of the country This task is still being conducted Seminars and training courses have been conducted in the Kyrgyz Republic and in the U S and visits to U S sites have been completed Additional seminars and visits are scheduled A major energy conference for the Central Asian Republics was held in July 1995

(d) Survey of coal resources, recommendations for improving coal mining efficiency, and development of a briquetting technology for the coal fines produced from the mining operations

In 1994, new projects were identified through cooperation among the agencies of the Kyrgyz Republic, USAID and the World Bank This report covers two of these projects as follows

- Task 1 - Improvement of Bishkek Power Plant and District Heating system, and

- Task 2 - Improvement of Electrical Transmission and Distribution systems

The Combined Heat and Power Plant (TES 1) in Bishkek consists of 24 high pressure steam boilers and 10 steam turbine/generators The peaking capacity is provided by heat-only steam boilers (HOBs) The Bishkek plant and steam generators need rehabilitation in order to improve efficiency and reliability, and lessen environmental impact

The transmission system consists of 500 kV lines (541 km), 220 kV lines (1009 km), 110 kV lines (4301 km) and 35 kV lines (4172 km) The distribution network consists of more than 60,000 km of 10,6, and 0 4 kV lines There are a total of 481 step-down transformer substations (500, 220, 110, and 35 kV) with a total capacity of 7,790 MVA The experience of the 1993-1994 winter season showed a dramatic increase in winter peak load for residential consumers, creating major overloading problems, not only in the distribution but also in the KNEHC transmission network In addition to the heavy loads on the 110 kV lines, other problems were also experienced in the Bishkek 110/35/6 kV sub-stations where power transformers were overloaded to 120-125% of capacity

The objective of this feasibility study was to prepare a plan with costs and schedules for rehabilitation of the Bishkek Power Plant and District Heating System An additional objective of this feasibility study was to prepare an electrical Transmission and Distribution (T & D) System Master Plan that will define the scope of work needed to improve the T&D system of the Kyrgyz Republic through the year 2005 Engineering and economic analyses of the TES 1 Power Plant and District Heating System were performed to develop a rehabilitation plan The study report provides a description of the existing system in terms of heat production, age and physical condition of equipment An evaluation was made of the system performance including such factors as fuel and energy consumption, heat losses, quality of service, failure frequency and maintenance program Major problems and deficiencies of the Bishkek System were identified with recommendations to rehabilitate the existing system

Comparisons with alternatives to the central district heating system were performed This work included technical performance, in addition to financial and economic comparisons between a rehabilitated Bishkek power plant and district heating system and the alternatives of Decentralized electric heating and Decentralized natural gas heating for both the current capacity and for planned future expansion of capacity to year 2005 The least cost investment plan is identified

Planning and engineering analyses of the City of Bishkek electrical transmission and distribution facilities were performed to develop a T & D improvement plan for the city The study program also considered the electrical requirements associated with the future possibility of retiring the Bishkek TES 1 thermal plant with conversion of the City of Bishkek heating system to electrical boilers as defined by work performed in Task 1 The plan of improvements through 2005 was based on the most probable electrical load growth forecasts for the City of Bishkek

Planning studies of the Kalinin area transmission and distribution facilities were performed to develop a T & D improvement plan for that region The results of the Kalinin and City of Bishkek analyses were extrapolated to provide a basis for developing a T & D master improvement plan for KNEHC Reliability, safety and energy loss reduction were considered and incorporated in the master improvement plan The KNEHC staff training needs in the areas of transmission and distribution planning, construction, operation and maintenance were assessed

1 1 Local Utility Organization

Prior to the break-up of the former Soviet Union, all of the energy enterprises of Kyrgyzstan were subordinate to the Soviet Ministry of Electric Power (Minenergo), with Kyrgyzstan's interests represented by Kyrgyzenergo On the foundation of this organization, and incorporating a number of smaller energy enterprises and scientific-planning institutions, the Kyrgyz State Energy Company was formed after the dissolution of the Soviet Union

In January 1994, the Government approved the new statutes of the national power utility, changing its name to the Kyrgyz National Energy Holding Joint Stock Company (KNEHC) As can be seen in figure 1-2, KNEHC operates through nineteen "enterprises" of which sixteen are entrusted with power generation, transmission and distribution, district heating, Operation and Maintenance (O&M), stores and training Three "enterprises" are involved in engineering, design and construction work

KNEHC operates, for all practical purposes, as the headquarters of a single vertically integrated utility Its organization chart appears in Figure 1-2 Thirteen individuals report to the President of the company, including two Vice Presidents (one in charge of technical operations, the other of administrative and commercial aspects), three Executive Directors oversee Capital Construction, External Affairs and Development, and eight Department Heads are in charge of fairly small units (personnel, accounting, economic matters, finance, legal etc) This structure is unusual in that a large number of individuals report to the president Further, units that one

26

would normally find under one vice presidency in other utilities (finance, accounting, commercial, economic matters) are spread in KNEHC case in an unreasonable number of units, which is not conducive to efficient decision making It is thus the parent company of TES-1 and Bishkek District Heating System as shown in Figure 1-3 and oversees the administrative, financial, policy, and technical operation of both of these enterprises Note that the responsibilities of the State Energy Company cover only electric and thermal power (heat and steam), they do not include coal, natural gas or crude oil supplies

In addition, the Kyrgyz National Holding Company system planning function is undertaken by the Planning-Economic Department and the Perspective Planning Department The Planning-Economic Department is responsible for the development of short-term (one-year) operational plans The Perspective Planning Department is responsible for the preparation of long-range (ten years or more) system development

Figure 1-4 is an organization chart illustrating the interfaces between the Planning-Economic Department and other groups involved in the development of short-term operational plans The Technical Service Department of Hydro, Thermal, Fuel-Transportation and Production are all involved in the short-term planning process coordinated by the Planning-Economic Department

The Perspective Planning Department is responsible for the coordinated development of long-range system expansion plans As shown in Figure 1-5, the perspective Planning Department is responsible for preparing the electric power and energy demand forecasts and evaluating the adequacy of generation capacity and system reserve The Perspective Planning Department, in consultation with the Central Dispatch Department, Commercial Department, and the technical Hydro, Thermal, and Production Departments prepares the generation and transmission expansion plans

KNEHC is also responsible for supplying electricity throughout the Kyrgyz Republic and district heat in Bishkek, Osh, Karakol, Kyzil-Kiya and Kara-Kul KNEHC operates 20 power plants with a total installed capacity of about 3,587 MW, including 18 hydroelectric power plants (2,949 MW comprising 82% of total generating capacity) and two combined district heat and power plants in the cities of Bishkek and Osh (638 MW comprising 18% of total generating capacity)

Figure 1-1

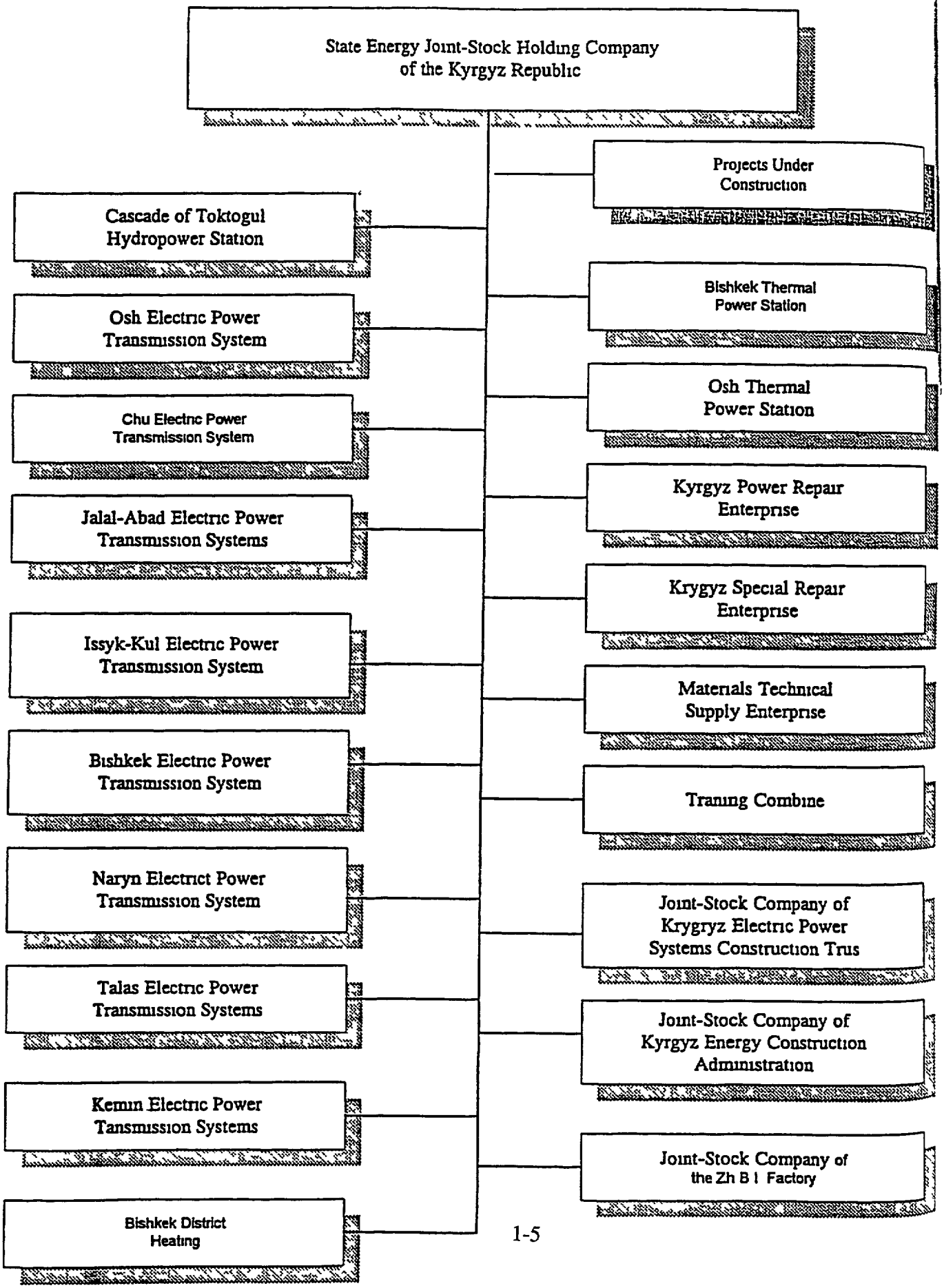
State Energy Joint-Stock Holding Company of the Kyrgyz Republic
Cascade of Toktogul Hydropower Station
Osh Electric Power Transmission System
Chu Electric Power Transmission System
Jalal-Abad Electric Power Transmission Systems
Issyk-Kul Electric Power Transmission System
Bishkek Electric Power Transmission System
Naryn Electrict Power Transmission System
Talas Electric Power Transmission Systems
Kemin Electric Power Tansmission Systems
Bishkek District Heating
Projects Under Construction
Bishkek Thermal Power Station
Osh Thermal Power Station
Kyrgyz Power Repair Enterprise
Krygyz Special Repair Enterprise
Materials Technical Supply Enterprise
Traning Combine
Joint-Stock Company of Krygryz Electric Power Systems Construction Trus
Joint-Stock Company of Kyrgyz Energy Construction Administration
Joint-Stock Company of the Zh B I Factory

28

Figure 1-2 KNEHC Organization Chart

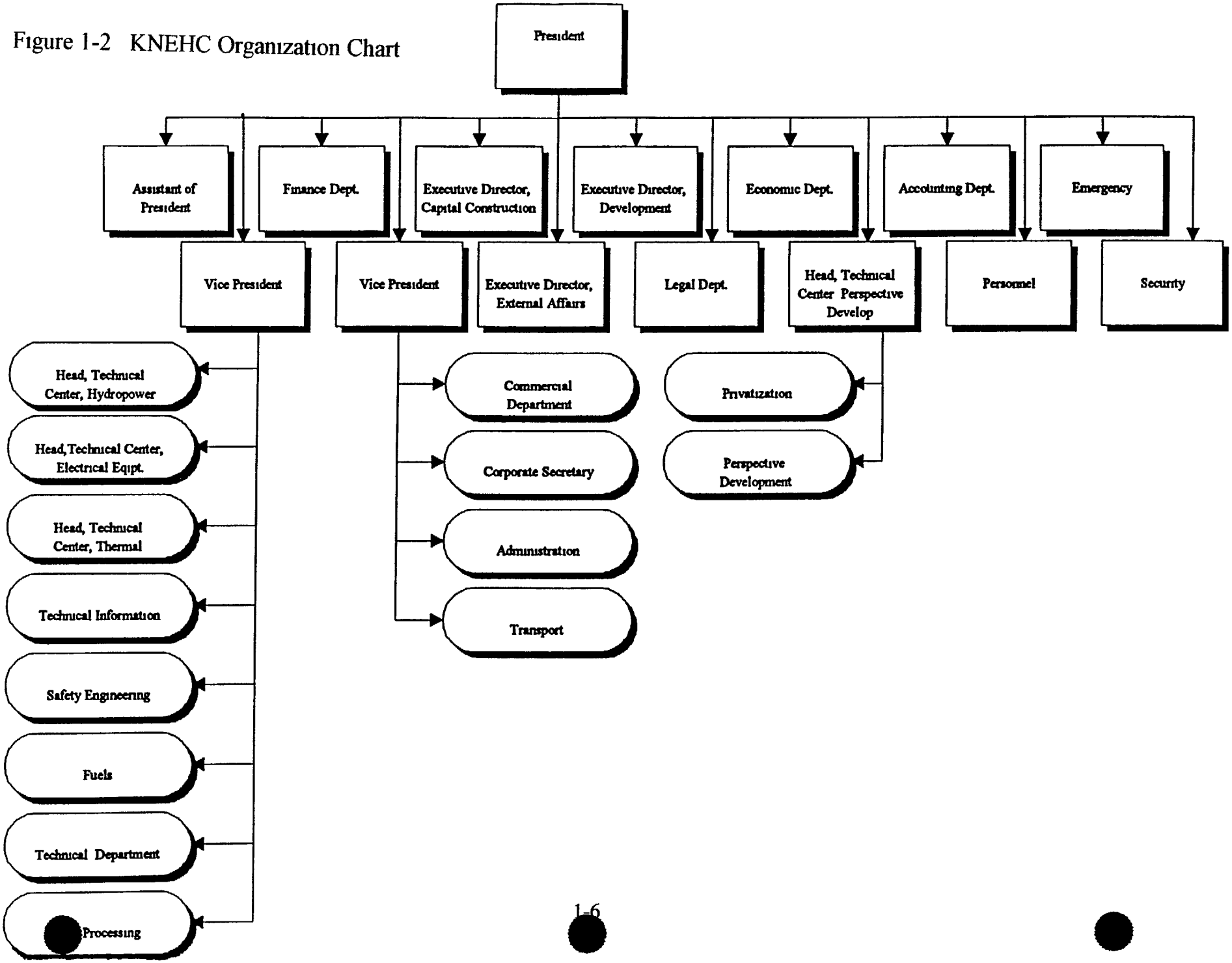

Figure 1-3

Bishkek District Heating System

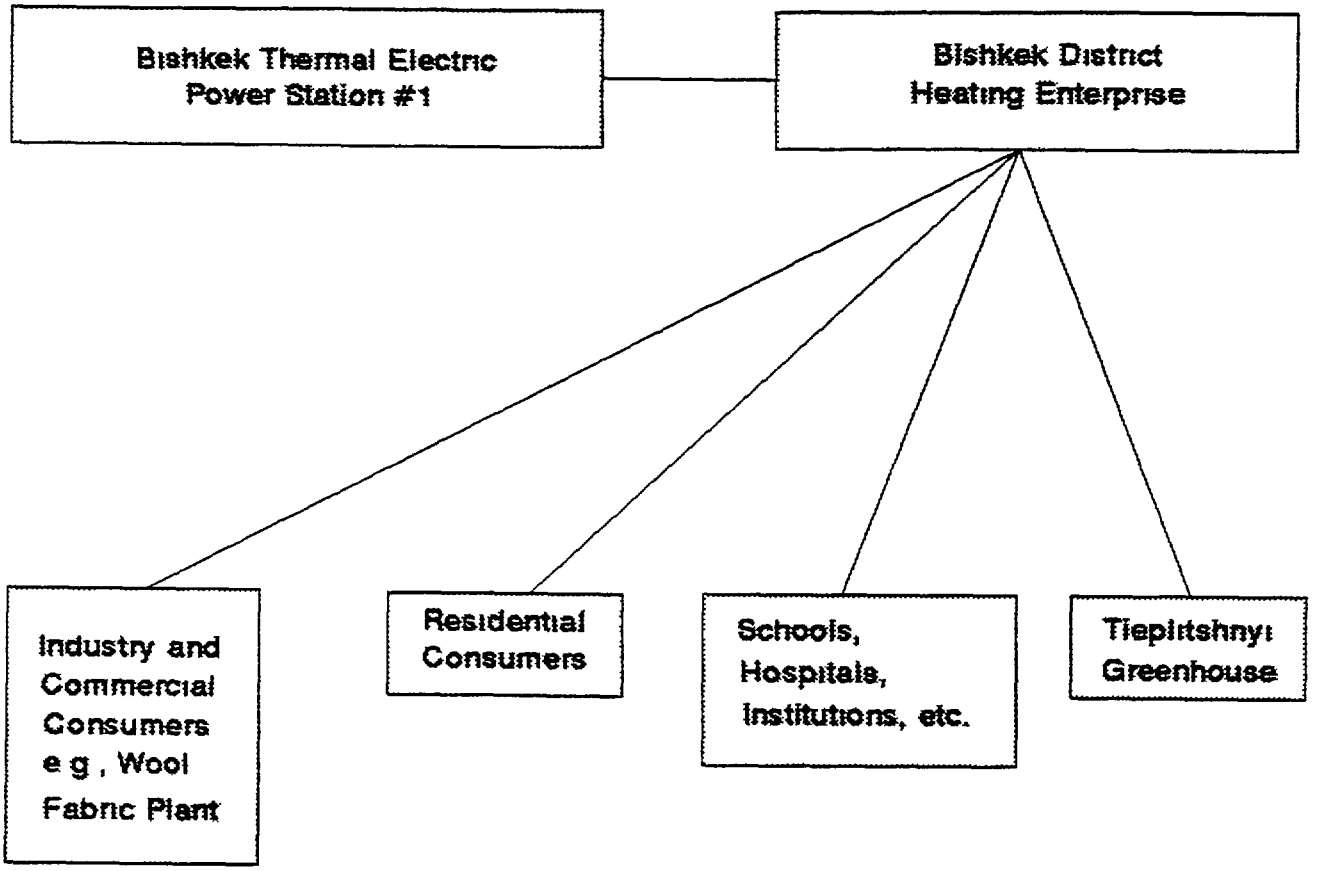

30

Figure 1-4

PLANNING - ECONOMIC DEPARTMENT
(ORGANIZATION OF SHORT-TERM PLANNING PROCESS)

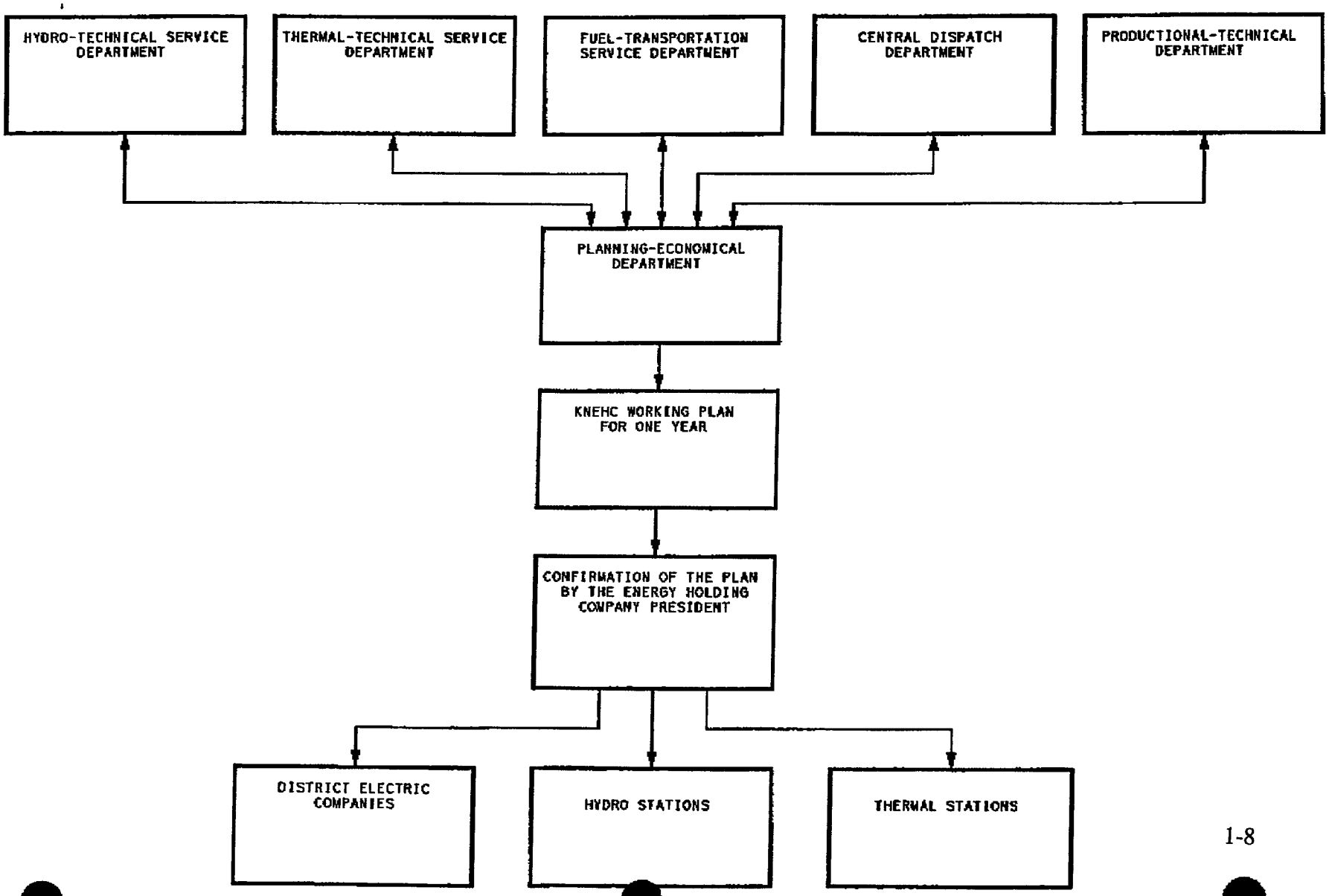

31

Fig. 1-5

PERSPECTIVE PLANNING DEPARTMENT
(ORGANIZATION OF LONG-TERM PLANNING PROCESS)

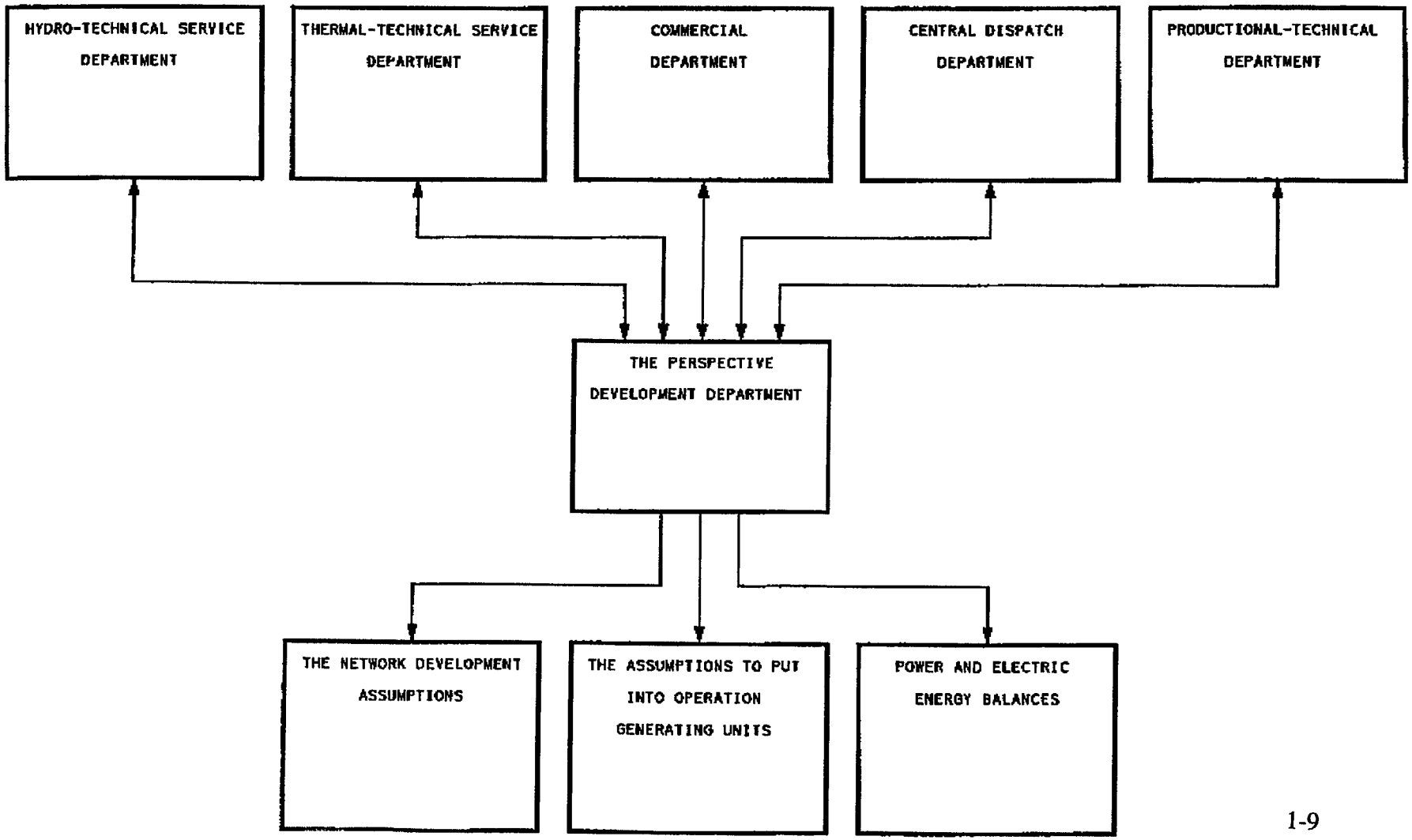

32

2 0 BISHKEK POWER PLANT, DISTRICT HEATING SYSTEM AND ELECTRICAL TRANSMISSION AND DISTRIBUTION SYSTEM

2 1 Priority Recommendations for the Improvement of the Bishkek TES, BISHKEK DH System, ET&D System

The following rehabilitation programs are recommended to improve the plant performance, efficiency, and enhance the reliability and availability of the Bishkek TES and District Heating System In addition, improvements are recommended for Electrical T&D system relative to losses, reliability, availability and of deferment of new electrical generation capacity

Priority modifications are most essential for improving operational capacity, efficiency and reliable operation and extension of plant life by at least 15 years

The following is a summary of the proposed recommendations for TES-1 plant, BDHE and ET&D The ET&D section also includes the economic cost benefit justification for project implementation

Basis of Costing for all Estimates

- All estimates provided are in 1995 US dollars
- Estimates include cost of equipment, material and installation labor
- Russian equipment is estimated using Western pricing No escalation applied in economic analysis
- Conversion in currencies used as follows

  1 USD = 4,500 Rouble
  1 USD = 10 5 Som

- Engineering and design is included in prices
- Freight included in cost of equipment
- Escalation will be applied in the economic analysis on local labor and local material only
- No contingencies reflected in prices for unknowns or for inflation

2 1 1 TES-1 Rehabilitation Program

This section presents the elements of the TES 1 rehabilitation program The evaluation of TES 1 has revealed a great and immediate need for rehabilitation, reconstructing and modernization The Consultant has found no serious technical obstacles for the transformation of the existing thermal plant and district heating system to a modern system capable of operating under market conditions through rehabilitation

The technical and economic analyses recommend the following elements for the Thermal Plant Rehabilitation which are divided into foreign and local components

COMPONENT	FOREIGN COST USD	LOCAL COST USD	TOTAL COST USD
Boiler Rehabilitation	$2,858,000	$945,000	$3,803,000
Turbine Rehabilitation	$4,525,000	$3,740,000	$8,265,000
I&C, Environmental, Other Plant Systems	$4,393,000	$1,265,000	$5,658,000
TOTAL	$11,776,000	$5,950,000	$17,726,000

The proposed project rehabilitation will meet several urgent needs, namely

- Modernization
- Life Extension
- Improvements in Electric and Thermal Capacity
- Improved Plant Reliability and Availability
- Improved Equipment Efficiency
- Reduction in O&M Costs
- Environmental Benefits

Improvements are recommended on Plant Boilers, Turbine-Generators, I&C, Environment Upgrades, and Other Plant Equipment

Following table provides a summary of improvement benefits

Bishkek Thermal Electric Station (TES 1)
Improvement Benefits

Characteristic	Without Rehabilitation	With Rehabilitation	Percent Improvement
Net Available Electric Capacity (MW)	558	648	16 1%
Net Available Thermal Capacity (Gcal/hour)	758	914	20 6%
Increase in Plant Availability	-	10 to 12%	10 to 12%
Boiler Efficiency (%)	87 50%	89 50%	2 0%
O&M Costs ($/yr, year 2000)	$13,880,000	$12,060,000	13 1%

Rehabilitated portions of TES-1 will join 15 years in Life Extension

Boiler Rehabilitation

(a) BK2 160-100 Boilers

These first six (6) boilers have been in operation for more than 200,000 hours

According to Burns and Roe technical evaluation with participation of TES staff, the full plant electrical power and thermal output requirements can be met by a total of eighteen (18) boilers i e , seven BKZ 160 plus eleven refurbished BKZ 220 boilers It is therefore proposed to concentrate the replacement/refurbishment effort on these boilers The oldest six BKZ 160-100 boilers could either be dismantled or permanently shut down and preserved for spare parts supply to the operating BKZ 160s

(b) BK2-220-100 Boilers

All of these boilers have been in operation for less than 100,000 hours The last four boilers, No 21 to 24 inclusive, have additional state-of-the-art design features (fully welded, tube-fin-tube furnace walls and roof construction) Thus, it is proposed to include boilers 14 to 20 in the refurbishment effort to maximize the efficiency improvements and plant output, and reliability

Rehabilitation Plan

- BRILC refurbishment/replacement and furnace and convective pass rooftubes tube penetration seals refurbishing for boilers No 14 to 20 inclusive (seven boilers)
- Furnace tubes (vertical tubewalls) partial replacement for boilers No 14 to 20 inclusive (seven boilers)
- Furnace and convective pass roof superheater tubes partial replacement for boilers No 14 to 20 inclusive

Boiler Rehabilitation

Cost Item	Direct Cost, Western Equipment, USD	Kyrgyz Labor and Material, USD	Totals, USD
Furnace wall tubing removal/replacement in burner zone for Boilers No 14 to 20	$683,000	$200,000	$883,000
Boiler refractory, insulation, lagging and casing refurbishment and roof superheater seal refurbishment for Boilers No 14 to 20	$2,175,000	$745,000	$2,920,000
	$2,858,000	**$945,000**	**$3,803,000**

Turbine/Generators Rehabilitation

The current total electrical power output capability of all units is 558 MW The total combined nominal thermal output of the steam turbines is currently 1152 Gcal/h

As is noted in the turbine assessment section, the first four turbines have accumulated an excessive number of operating hours and show signs of metal fatigue and wear Units 1 and 2 had developed cracks in the cylinders and had a series of problems with turbine components, and require excessive maintenance to keep them running Unit 3 (as well as Units 1 and 2) had problems with governor valves due to wear, and the rotor of this unit is in need of replacement This unit also exceeded its original design life Unit 4 also developed cracks in the remaining HP section which now operates in the backpressure mode Units 5 and 6 are closely approaching their 200,000 hours of operation In order to better monitor the condition of metal of these units, a frequent NDE and inspection and testing program is required to prevent or minimize unscheduled shutdowns The most important would be for the plant to perform replication type creep testing on the high pressure/high temperature components In order to facilitate the metal control in an efficient and expeditious manner, the plant should have modern NDE and testing equipment Because of the large number of units and components (boilers, turbines, and high temperature steam piping) the number of people required for the testing of the many parts will increase as the plant is getting older Units 7, 8 and 9 and 10 are entering their age where more and more testing will be required The number of people assigned to these tasks can be minimized when the testing equipment is modern utilizing the latest technology

In addition the plant has procured a new turbine unit (known as Unit 11) which currently is sitting in storage for the past two years Auxiliary equipment for this unit still needs to be purchased Unfortunately, due to the lack of funds the installation of this unit was halted

Considering the above and our findings related to the condition of steam turbines and their auxiliary equipment and other components associated with the turbine plant, the following are priority improvements

Rehabilitation Plan

- Commissioning of Turbine Unit 11 Commissioning of this unit will enhance plant electric capacity and heat supply capability This turbine is a modified version of the T-115/125-130 turbine the manufacture of which started in 1989 by LMZ The unit has two controlled heat extraction and a simplified regenerative feedwater heating system, and consists of two cylinders It was specifically developed to be used for replacement of old units during rehabilitation of existing power plants The version (Type 1) which is available at the Bishkek plant is most effective in the heating regimes as it has short last row blades The unit, however, must operate with the main steam parameters existing at the Bishkek Thermal Station

With such initial steam parameters this unit will add about 90 MW electric capacity and up to 175 Gcal/h of thermal capability This is sufficient capacity to enable the removal of Units 1 and 2 from service in a subsequent upgrade phase

In order to commission this turbine various additional feedwater heating cycle equipment must be procured (As it was mentioned above, only the turbine itself and the main condenser have been obtained by the plant)

- The plant should purchase state-of-the-art NDE equipment Due to the advanced age of this plant it is essential that systematic monitoring of its many parts be continued and expanded using modern equipment Use of this equipment in a well planned metal control program is expected to increase availability and reliability since unplanned shutdowns can be minimized It is also expected to contribute to safer operation, since with proper metal condition monitoring potential failures can be better predicted and avoided

- Replace condenser tubes in Unit 3 condenser

- Replace the turbine shaft sealing system components at the front end of the high pressure turbine of Unit No 7

- Replace the flexible coupling connecting the HP and combined IP-LP rotors of Unit 8 turbine together with the No 2 bearing to eliminate low frequency vibration problems at partial loads

- Provide portable vibration monitoring equipment to be able to systematically monitor shaft vibration at bearings and to provide for planned replacement of expensive Babbit metal This equipment should also be utilized during rotor balancing

Turbine-Generator Rehabilitation

Cost Item	Direct Cost, Russian Equipment, USD	Direct Cost, Western Equipment, USD	Kyrgyz Labor and Material, USD	Totals, USD
Commission Unit #11	$4,140,000	N/A	$1,420,000	$5,560,000
Cost of Turbine #11	N/A	N/A	$2,275,000	$2,275,000
Purchase NDE Equipment	N/A	$270,000	N/A	$270,000
Purchase Portable Vibration Monitoring Equipment	N/A	$10,000	N/A	$10,000
Replace condenser tubes for Turbine-Generator #3	$45,000	N/A	$20,000	$65,000
Replace Turbine Shaft Sealing System for Unit #7 HP end	$35,000	N/A	$15,000	$50,000
Replace Rotor Coupling for Unit #8	$25,000	N/A	$10,000	$35,000
	$4,245,000	**$280,000**	**$3,740,000**	**$8,265,000**

Other Plant System and Environmental Upgrade Rehabilitation Plan

Rehabilitation Plan

Coal Storage and Coal Handling System

The Bishkek power plant has two rotary car dumpers at the present time, but because of their age (34 years) and lack of spare parts, they breakdown very often In addition, the columns for these coal dumping mechanisms have developed cracks Therefore, it is recommended to procure and commission a new rotary car dumping mechanism in a new building adjacent to the existing coal dumping car buildings

Existing coal car dumping mechanisms are designed to unload cars with a maximum weight of 60 tons In addition, repairing of the existing coal dumping mechanism is very difficult due to lack of spare parts Therefore, the new coal dumping car mechanism should be designed with a capacity to unload 120 ton coal cars

Two truck weighing scales are also recommended for installation during the installation of new coal car dumping mechanism These scales should be used for weighing coal cars and mazut (oil) tank cars

Plant Compressed Air System

Because of the age and condition of the existing four plant compressors (30 cubic meters/minute capacity each), and due to lack of spare parts, it is recommended to procure and install two (2) new rotary screw air compressors These new compressors will have a capacity of 100 cubic meters/minute each at an air discharge pressure of 9 kg/cm^2, and will be of the oil free type These increased compressors capacity will provide ample reserve capacity with the use of one of the existing 30 cubic meter/minute capacity air compressor, and would enhance the plant operations and pneumatic transport of boiler flyash

Environmental Upgrades

The Bishkek Plant presently does not have any devices for measuring and monitoring SO_x and NO_x levels in the flue gases discharged to the atmosphere The emission levels are calculated at the present time

Measurement of flue gas emissions for fossil fired boilers are generally provided for two reasons

1 Monitoring and control of combustion efficiency

2 Monitoring of emissions to demonstrate compliance with emission regulations

40

Thus, for control of boiler operations, it is recommended to use O_2 and CO measuring equipment for each of the refurbished boilers In addition, the monitoring of emissions require NO_x, opacity measurements (each boiler), and sulfur dioxide (SO_2) analysis of the flue gas emitted to the atmosphere

In-situ stack monitor where a transmitter and receiver installed across the stack permit analysis of the gases passing through the stack without withdrawing a sample of the flue gas This system has the additional advantage of calibration without the requirement for certified calibration gas blends which are expensive to prepare A system of this type is recommended for the 300 meter and 180 meter stacks (total of two monitoring devices)

Other cost items include refurbishment of the electrostatic precipitators on all eleven BKZ220-110 boilers and, purchase and installation of flue gas ducting from two 220 and seven 160 boilers to connect them to the 300 meter stack in the future

Modern laboratory equipment will be purchased in order to update the facilities currently used by the TES-1 staff Items to be procured include a Gas Chromatograph, Atomic Absorption Spectrophotometer, and other general laboratory measuring devices It is highly encouraged that this equipment be located at the site of the State Committee of Environmental Protection, in the city of Bishkek The site is situated close to the plant, thus it is convenient for the plant personnel In addition, the equipment can be used by anyone else in Kyrgyzstan Thus, this equipment could benefit the entire country

The Electrostatic Precipitators (ESP) will be rehabilitated Each boiler has two (2) 50% ESPs Some have 7 5 meter high plates, while others have 12 meter plates Each ESP has four fields (8 total) At least one complete unit will be rehabilitated to increase the collection efficiency

Plant Instruments and Controls Improvements

The following Plant Instrumentation and control improvements are recommended

<u>Rehabilitation Plan</u>

- Upgrade of plant information systems

  Replace existing control room indicating devices (meters, recorders, indicators etc) with work stations in each of the five central heating control rooms, each of the two main control rooms and the water treatment control room

- Add personal computers connected to the information system, in the plant directors office, the chief engineers office, and the assistant chief engineers office

- Add engineering station in the automated system group office

- Supply infrared thermometers for leak detection (heat spy)

I & C, Environmental Upgrades, and Other Plant Equipment Rehabilitation

Cost Item	Direct Cost, Western Equipment, USD	Kyrgyz Labor and Material, USD	Totals, USD
Instrumentation & Controls Upgrade, Stage 1	$450,000	$116,000	$566,000
Installation of New Air Compressors	$211,000	$23,000	$234,000
Instrumentation & Controls Upgrade, Stage 2	$630,000	$140,000	$770,000
Installation of New Rotary Car Dumpers	$830,000	$510,000	$1,340,000
Installation of Emission Monitoring Devices and Environmental Improvements	$1,600,000	$200,000	$1,800,000
Instrumentation & Controls Upgrade, Stage 3	$480,000	$160,000	$640,000
Instrumentation & Controls Upgrade, Stage 4	$192,000	$116,000	$308,000
	$4,393,000	**$1,265,000**	**$5,658,000**

Summary Bishkek TES 1 Priority Rehabilitation Project

(All Costs are in USD)

Cost Item	Description	Direct Costs
Rehabilitation of BKZ 220-100 Boilers	þ Furnace wall tubing removal/replacing in the burner zone (approx 15% of wall tubing per Boiler) for Boilers No 14 to 20 þ Boiler refractory, insulation lagging and casing refurbishment for Boilers No 14 to 20 þ Furnace roof superheater tube penetration seals refurbishment for Boilers No 14 to 20	$3,803,000
Rehabilitation of Turbine-Generators and Auxiliaries	þ Commissioning of Unit #11 Turbine-Generator þ Purchase NDE equipment for the metal testing laboratory þ Replacement of condenser tubes for Unit #3 Turbine-Generator þ Replacement of Turbine shaft sealing components on the HP end of Unit #7 Turbine-Generator þ Replacement of shaft coupling (HP to IP) and bearing #2 for Unit #8 Turbine Generator þ Purchase Portable Vibration Monitoring Equipment	$8,265,000
Instrumentation & Controls Upgrades	þ Replacement of the existing control room indicating devices with work stations þ Purchase and installation of computers connected to the plant's information system þ Purchase and installation of flow, pressure, temperature, and level transmitters for various plant systems	$2,284,000
Other Plant Equipment	þ Installation of new Rotary Car Coal Dumpers þ Installation of new Air Compressors	$1,574,000
Environmental Upgrades	þ Installation of emission monitoring devices Environmental Upgrades	$1,800,000
	TOTAL	$17,726,000

As already noted, the proposed projects address the immediate needs to improve TES-1 performance Section 2 7 of this report describes in further detail other projects needed to improve TES-1 performance in future years

2 1 2 BDHE Rehabilitation Program

The specific objective of the study of the District Heating System in Bishkek was to examine the possibilities of rehabilitating and modernizing the system, enabling Bishkek District heating Enterprise (BDHE) to operate under full market conditions, and providing the customers with a secure energy supply at a reasonable cost

The technical and economic analyses recommend the following elements for BDHE Rehabilitation which are divided into foreign and local components

Cost Item	Direct Cost, Western Equipment, USD	Kyrgyz Labor and Material, USD	Totals, USD
Underground and Aerial Piping	$8,970,000	$4,530,000	$13,500,000
Pumping Station Upgrades	$1,150,000	$10,000	$1,160,000
SCADA System	$755,000	$35,000	$790,000
Substations Upgrade	$8,850,000	$900,000	$9,750,000
TOTAL	$19,725,000	$5,475,000	**$25,200,000**

Following improvement benefits will be realized by implementing the recommended rehabilitation program

Improvement Benefits

Characteristic	Without Rehabilitation	With Rehabilitation	Percent Improvement
Network pipe heat losses [TJ/year]	2290	1500	35%
Pumping power consumption [MWh/y]	21754	14469	33%
Water losses due to leaks [million m^3/year]	24 5	17 5	29%
Manpower demand [operational staff]	433	378	13%
Heat consumption [TJ/year] due to improved controls (Variable Flow)	9536	9248	3%

Rehabilitated portions of Bishkek District Heating Enterprise will gain 20 years in life extension

BDHE Rehabilitation Description

Pipework rehabilitation

The proposed pipework rehabilitation to be included in the 1996 to 1999 investments encompasses about 12,500 m of underground primary pipelines and about 7,000 m of aerial pipelines The underground pipework to be replaced is 25-30 years old and is known to cause serious leakage and heat losses

The aerial pipelines to be re-insulated have been exposed to vandalism, whereby most of the weather protection metal sheets has been taken away (supposedly sold as scrap metal) exposing the insulation to the weather and further vandalism It is estimated that more than 50% of the insulation has been seriously damaged

The underground pipework will be replaced by preinsulated pipe sections which may be placed either in the present pipe channels or alongside these The reinsulation of the aerial pipework shall be by means of mineral wool covered with reinforced concrete or with a cement composite (not asbestos cement)

The estimate of the proposed pipework rehabilitation is given below

Underground pipework

Pipe section identification	Diameter mm	Length m	Foreign Materials 1000 USD	Local Materials 1000 USD	Labor costs 1000 USD	Total costs 1000 USD
Toktogula Street PM13-011	2*700	900	895	220	101	1216
Fuzika Street IV39-B29	2*500	890	476	160	86	722
Ahunbaeva Street B-26-B29	2*500	880	470	158	85	713
Magistral Rostok TES-B19	2*700	4740	4713	1157	531	6401
Frunze Street II6-II10	2*700	700	696	171	79	946
Microraionu Alamedin	2*600	1700	1455	359	182	1996
Kvartala 226 227	2*150	1800	195	146	95	436
Kvartala 116	2*100	900	70	44	46	160
Total	-	12510	8970	2415	1205	12590

Aerial pipework

Pipe section identification	Diameter mm	Length m	Foreign Materials 1000 USD	Local Materials 1000 USD	Labor costs 1000 USD	Total costs 1000 USD
From TES1 to Belinskaya	(2*900) 2*700	7000	0	616	295	911
Total	-	7000	0	616	295	911

Modernization of pumping Stations

Selected pumps will be supplied with frequency converters for variable speed control and a few new pumps will be added to the system This will allow the district heating system to operate as a variable flow system instead of the present fixed-flow-variable-temperature operation

The works has been estimated as follows

Equipment	Amount	Materials Foreign costs USD*1000	Installation Local costs USD*1000	Total Costs USD*1000
Frequency converters New Pumps Filters	19 pieces 6 pieces 19 pieces	840 180 133	7	1160
Total		1153	7	1160

Automatic Regulation, Control and Monitoring System (SCADA)

The installation of the computerized SCADA system will facilitate the automatic operation of the variable flow system in that the pumping will be regulated in accordance with demands monitored at various critical locations of the network and transmitted to the central computer

The work are estimated as follows

Equipment	Amount	Materials Foreign costs USD*1000	Installation Local costs USD*1000	Total Costs USD*1000
Main control	1 piece	210 50	1 90	212 40
pump stations	12 pieces	127 30	0 80	128 40
pump transm	7 pieces	92 20	4 10	96 30
pump meters	1 piece	120 60	5 80	136 40
boiler stations	3 pieces	44 50	0 20	44 70
boiler transm	12 pieces	40 00	1 70	41 70
boiler meters	1 piece	64 40	1 90	66 30
network trans	5 pieces	10 70	0 30	11 00
com system		25 80	16 10	41 90
training		8 40	1 60	10 00
Total		754 40	34 40	788 80

Rebuilding of Substations

The rebuilding of the about 3200 substations encompasses the installation of equipment and devices which will enable the substations to transfer heat energy from a variable flow district heating system, and which, at substation or building level, will control the heat consumption Furthermore 300 substations at public and commercial buildings will be furnished with heat

meters as a first step towards the introduction of consumption based tariffs

The works are estimated as follows

Equipment	Amount	Materials Foreign costs USD*1000	Installation Local costs USD*1000	Total Costs USD*1000
Pressure diff valves strainers	 3187 pieces 3187 pieces	 3667 523	484	4674
Control valve heat control pump heat meter	3187 pieces 3187 pieces 3187 pieces 300 pieces	1583 286 2363 425	419	5076
Total		8847	903	9750

2.1.3 Electrical Transmission and Distribution Rehabilitation Program

There is a great need to rehabilitate and reinforce the transmission and distribution system in Kyrgyzstan This section summarizes the elements of the Kyrgyz Republic transmission and distribution improvement program Final element of the transmission and distribution improvement program were selected jointly by members of the Kyrgyzstan and AEP Energy Services team based on the extensive list of improvement projects contained in the draft final report of the project team

The implementation of the projects will depend on the amount of funds allocated to this part of the World Bank program However it is now anticipated that sufficient funds will be available for several of the first priority projects This program is viewed as the first step of many that will be needed to improve the reliability, operation, maintenance and efficiency of the transmission and distribution system A breakdown of the foreign and local costs are shown in the following table (See Appendix G for more information)

ET&D COST SUMMARY

Cost Item	Total Cost, USD	Direct Cost, Western Equipment, USD	Kyrgyz Labor and Material, USD
Ala Archa Project (New Station)	$10,793,000	$9,532,000	$1,261,000
Chuiskaia Project (Newe Station)	$2,271,000	$1,906,000	$365,000
Addition of 110 kV Circuit Breakers	$3,454,000	$3,116,000	$338,000
Orto Alysh Project	$1,244,000	$1,012,000	$232,000
Selectro Project	$477,000	$426,000	$51,000
SAeleccionaia Project	$1,330,000	$1,079,000	$251,000
Novo-Troickaia Station Up-Grade	$1,916,000	$1,837,000	$79,000
Meters, Tools and Spare Parts	$3,200,000	$3,100,000	$100,000
TOTAL	$24,685,000	$22,008,000	$2,677,000

Following improvement benefits will be realized by implementing the recommended rehabilitation program

Improvement Benefits

Characteristic	With Rehabilitation
Reduction in Transmission Power Losses (MWe)	12 2
Annual Energy Savings from Reduced Transmission Power Losses (GWh/Yr)	49 2
Valuation of Energy Savings from Reduced Transmission Power Losses ($/Yr)	$1,378,000
Increase in Installed Transformer Capacity (Nameplate MVA)	448
Transformer Capacity Available for Relocation to Other Substations (Nameplate MVA)	54

Improved Reliability of Bishkek Power System	Second 220/110 kV Supply to City Avoided Transformer and Line Overloads Relaying and Protection Upgrades
Improved Maintenance Scheduling	Replacement of transformer 110 kV disconnect switches with circuit breaker minimizes disruption to nearby substations and customer outages
Improved Maintenance Practices, Safety and Customer Service Reliability	Tools, Training and Spare Parts Inventory
Improved Demand and Energy Metering and Revenue Enhancement ($/year)	$4,416,00 Metering installation/improvements to facilitate accurate bill preparation and collection

The proposed projects are designed to meet seven urgent needs of the transmission and distribution system First, to provide a new source to the city of Bishkek to meet the present and anticipated loads in the city Second, to strengthen the power supply to the Chuiskaia substation which serves the industrial center of Tok Mak Third, to replace substation transformers and associated equipment that are currently overloaded and vulnerable to failure Fourth, to increase the reliability of the 110 kV power supply to the City of Bishkek by improving the system protection and operating practices Fifth, to increase transformer capacity at existing substations to serve new and existing customers Sixth, to procure tools, spare T&D parts to repair and replacement of underground distribution and finally, installations of meters to improve revenue collection

As already noted, the proposed projects address immediate needs to improve the electrical power supply to the City of Bishkek and surrounding areas Section 4 of this report describes in detail other projects needed to improve the power supply system in the Kalinin area of the Chu Transmission Company and City of Bishkek Section 4 also describes more generally the need for reinforcement of the electrical transmission and distribution system in other regions of Kyrgystan

The Ala Archa Project

Project Description

The Ala Archa project is a new 220/110 kV substation located in the outskirts of the southwestern area of Bishkek The project plan calls for the construction of approximately 20 km of double circuit 220 kV overhead transmission line from the new station site to the intersection of the Frunzenskaia-Bystrovka 220 kV line The plan calls for the installation of two 125 MVA, 220/110 kV transformers and necessary 220 and 110 kV switchgear in the new Ala Archa substation The Ala Archa substation will be integrated into the nearby 110 kV system serving the city by the construction of two double circuit 110 kV transmission lines (each approximately 2 km) from Ala Archa to the intersection of the Kyzyl Asker-Aini 110 kV line That 110 kV line which is part of the 110 kV loop surrounding the City, will be severed to create the following four

circuits Ala Archa-Aini #1 and #2, and Ala Archa-Kyzyl Asker #1 and #2 The project also calls for the construction of a third double circuit 110 kV transmission line from Ala Archa to the Pikovaia Kotelnaia substation and the construction of approximately 0 8 km of 110 kV line from Lenins plant to the Yuzhnaia substation The installation of 100 MVAr of shunt capacitors at the Ala Archa substation is also part of this proposal

Project Cost

The total estimated cost of the Ala Archa project and related improvements in 1995 U S dollars is $10 8 million

System Performance without the Ala Archa Project

The power supply to Bishkek consists principally of the Bishkek combined heat and power plant and the Glavnaia 220/110 kV substation Actual experience (peak load of 449 MW) and system planning studies of the Bishkek network for projected 1997/98 winter peak load conditions (473 MW) indicate severe problems of low voltage and high transmission line and transformer loadings exist with the present power supply system

The loadings on the Glavnaia transformers and the main 220 kV source circuit to that substation, i e the Kara Balta-Glavnaia 220 kV circuit, are tightly related to the availability and output of the Bishkek TES 1 power plant Power flow simulation studies, with the conservative assumption of all transmission lines in-service, indicate safe loadings on the 220 kV and 110 kV transmission lines if Bishkek TES 1 plant output is 310 MW or more for peak load conditions If the plant operates at levels less than 310 MW but more than 170 MW (which now is the normally expected operating range) loadings on the Kara Balta-Glavnaia 220 kV line will exceed 100% of its normal rating of 270 MVA If the Bishkek TES 1 plant output is at or below approximately 170 MW, the Kara Balta-Glavnaia 220 kV line will load beyond its emergency capability of 351 MVA (130 % of normal capacity) which could jeopardize power supply to the entire Northern area of Kyrgyzstan (approximately 1400 MW of load, including the City)

The failure of one of the two Glavnaia transformers could result in an extreme overload of the other transformer Since the power supply to the entire city is highly dependent on the Glavnaia substation and the Bishkek TES 1 plant, the overloading and subsequent failure of the Glavnaia transformers would jeopardize power supply to the entire city No spare transformer capacity is provided to back-up the Glavnaia transformers The purchase or relocation of a transformer to the station could take a few months to a year or longer The entire city load of 473 MW is vulnerable to an extended blackout should a Glavnaia transformer fail

Unless the transmission supply to the city of Bishkek is improved, the fuel supply problems, unavailability of generating capacity at the Bishkek TES 1 plant, and the inadequacy of existing transmission facilities will continue to make the city of Bishkek vulnerable to a serious blackout There is little to no operating margin or flexibility in the present power supply system serving the single most major populated center of the country The Kyrgyz National Energy Holding Company views the reinforcement of the Northern Kyrgyzstan transmission system and the City of Bishkek as the Nation's most urgent problem

System Performance with the Ala Archa Project

The Ala Archa project will provide a second transmission source to the City of Bishkek The introduction of the Ala Archa substation will reduce the loadings on the Kara Balta-Glavnaia 220 kV line and the Glavnaia 220/110 kV transformers since the Bishkek load will now be divided between three principal supply sources 1) Bishkek TES 1 Plant, 2) Glavnaia 220/110 kV substation and, 3) the new Ala Archa 220/110 kV substation The introduction of the Ala Archa substation will provide operating margin to reliably meet the existing load and to accommodate expected future load growth

Benefits of the Ala Archa Project

The results of power flow simulation studies for projected 1997/98 winter peak load conditions indicate the introduction of the Ala Archa project will reduce active and reactive system losses by 4 to 10 MW and 15 to 55 MVAR, depending on the generation dispatch at the Bishkek TES 1 plant The active power losses in the City of Bishkek are reduced by approximately 10 to 15%, a very significant savings and an indication of how heavily loaded the network is prior to the introduction of the Ala Archa project The annual energy savings resulting from the introduction of the Ala Archa project is estimated at 20 2 GWH If such savings are valued at a rate of 2 8 cents per kilowatthour (variable cost of generation from TES-1), this reduction in losses represents a savings of approximately $564,150 annually The present worth of the reduction in losses, avoidance of costs associated with future generating capacity, provision of margin to accommodate future load growth and improved reliability of the city power supply system are presented in the economic analysis section The Ala Archa project will provide much needed immediate relief to the city transmission system

Future Developments

The substation layout shall provide flexibility for the future installation of three 220 kV transmission lines and a minimum of four 110 kV transmission lines The heavy loadings expected on the Frunzenskaia-Ala Archa 220 kV transmission line resulting from the loads at Ala Archa and the demands further east in the Issyk Kul area will require another 220 kV line into Ala Archa from Frunzenskaia This line, subject to further system planning studies, could be the beginning of a 500 kV development (initially to be operated at 220 kV) that would ultimately extend to the Kemin substation in the Issyk Kul area

The Chuiskaia Project

Project Description

The Chuiskaia substation is located near the industrial city of Tok Mak which is about 65 km east of Bishkek The Chuiskaia project is designed to integrate the existing Glavnaia-Bystrovka 220 kV transmission line into the Chuiskaia 110 kV substation The project plan calls for the installation of 1-125 MVA, 220/110 kV transformer (to be relocated from the Issyk Kulskaia substation) and associated 220 kV and 110 kV switchgear Approximately 1 km of double circuit 220 kV line construction is needed to integrate the Glavnaia-Bystrovka 220 kV line into the Chuiskaia substation

Project Cost

The total estimated cost of the Chuiskaia project and related improvements in 1995 U S dollars is $2 3 million

System Performance without the Chuiskaia Project

The eastern areas of the Chu Company and the Issyk Kul area are highly dependent on transmission supply from source circuits emanating from the Frunzenskaia 500/220 kV substation and by 220 interconnections to Almaty The area is also dependent on a 110 kV line from the Bishkek TES 1 plant to Bystrovka substation The Bishkek TES 1-Bystrovka 110 kV line has five intermediate stations along its length The five stations include Alamedin, Kant, Ivanovka, Tok Mak (Chuiskaia) and Iskra The 110 kV line is of double circuit construction (AC-240 conductor/phase) to the Kant station and single circuit construction (AC-185 conductor/phase) from Kant to Bystrovka

Power flow studies and operating experience demonstrate the 110 kV line section between Kant and Ivanovka substations is heavily loaded and can often load beyond its capability of 100 MVA An outage of this line will jeopardize service to the loads east of Bishkek since the 220 kV lines which operate in parallel with the 110 kV line can overload Power flow simulations and actual experience demonstrate the 110 kV line can overload even when the Bishkek TES 1 plant is operated at reduced output levels of 250 MW Operation of the plant above 250 MW would create even higher overloads in the 110 kV line which would further jeopardize the reliability of power supply to loads in the Issyk Kul and eastern Chu Electric Company service areas

System Performance with the Chuiskaia Project

The Chuiskaia project is designed to relieve the overloads on the Kant-Ivanovka 110 kV line The nearby Glavnaia-Bystrovka 220 kV line will be integrated into the existing Tok Mak substation This integration will provide a 220/110 kV source into the Chuiskaia substation which will have the effect of reducing the loading on the Kant-Ivanovka 110 kV transmission line

Power flow simulation studies of the new Chuiskaia 220/110 kV integration project indicate the loading on the Kant-Ivanovka 110 kV line will be reduced by 20% (from 111% of its normal capability to 91%) under peak load conditions The reduction in the loading of the 110 kV line is attributable to the increased load picked up by the 220 kV line section from Glavnaia-Chuiskaia The reduction in the Kant-Ivanovka 110 kV line loading will provide margin on that circuit to provide for future increased operating levels of the Bishkek TES 1 plant

Benefits of the Chuiskaia Project

The Chuiskaia project will relieve the overloads now experienced on the Kant-Ivanovka 110 kV transmission line The integration of the Glavnaia-Bystrovka 220 kV line into the Kant-Bystrovka 110 kV line will also significantly reduce the transmission losses It is expected that the transmission losses will be reduced by 6 MW The annual energy savings resulting from the introduction of the Chuiskaia 220/110 kV project is estimated at 24 2 GWH If such savings are valued at a rate of 2 8 cents per kilowatthour (the estimated variable cost of Bishkek TES 1

52

generation), this reduction in losses represents a savings of approximately $677,000 annually The present worth of the reduction in losses, avoidance of costs associated with future generating capacity, and the provision of margin to accommodate future load growth are calculated in the economic analysis section The Chuiskaia project will provide much needed immediate relief to the eastern Chu Valley system and provide some margin to improve the reliability of the eastern Chu transmission system

Future Developments

The layout of the Chuiskaia substation should provide for future expansion of the 220 kV and 110 kV substation Provision for a minimum of two future 220 kV and two 110 kV transmission lines should be adequate since no firm plans for such expansion are now contemplated The initial substation layout provides for the addition of a second 220/110 kV transformer It is expected that the transmission system to the east of this substation, at or in the vicinity of the Bystrovka substation, will be reinforced at 500 kV in the future

Bishkek 110 kV System Protection Improvements

Project Description

This project is designed to improve the system protection and reliability of power supply to the city of Bishkek The project is also designed to reduce the fault duties on the 110 kV lines and 110 kV/lower voltage transformers at twelve substations tapped off the 110 kV double circuit transmission line that encircles the city

The project plan calls for the installation of twenty two circuit breakers and associated improved relay protection at twelve substations The proposed improvements are planned for the following substations Novo Yuzhnaia, Pikovaia Kotelnaia, Aini, Novo Zapadnaia, Karagachevaia, Molodogvardeiskaia, Yuzhnaia, Promyshlennaia, Energeticheskaia, Alamedin, Novo Vostochnaia, and Kostromskaia

Project Cost

The total estimated cost of the Bishkek system protection improvement project in 1995 U S dollars is $3 5 million

System Performance without the System Protection Upgrade

A 110 kV double circuit transmission line encircles the city The Bishkek TES 1 plant and the Glavnaia 220/110 kV substation are the main sources of supply to the 110 kV ring The southern section of the ring extends from the Bishkek TES 1 plant to the Kyzyl Asker substation Four 110 kV circuit breakers, two at the Bishkek TES 1 plant switchyard and two at the Kyzyl Asker substation, protect the southern 110 kV double circuit transmission line Transformers at seven substations are solidly tapped off the 110 kV transmission line The following table lists the substations and transformer capacity installed between the Bishkek TES 1 plant and the Kyzyl Asker substation

SOUTHERN RING 110 KV SUBSTATIONS	INSTALLED TRANSFORMER CAPACITY (MVA)	110 KV TRANSFORMER GROUND/DISCONNECT SWITCHES	110 KV CIRCUIT BREAKERS
SELEKCCIONNAIA	1*16	0	1
PIKOVAIA KOTELNAIA	2*16	2	0
NOVO YUZHNAIA	1*16,1*25	2	0
LENINS PLANT (CUST)	2*40	2	0
AINI	2*16	2	0
ORTO ALYSH	1*25	0	1
NOVO VOSTOCHNAIA	2*25	2	0
TOTAL	**276**	**10**	**2**

Note The Lenins Plant substation is owned by the customer The cost to upgrade the relay protection system at the Lenins Plant is excluded from this project

The southern portion of the 110 kV loop is used to distribute the power to the substations listed in the foregoing table The system protection scheme now in existence exposes all of the substations, and more importantly, about half of the Bishkek city load, to interruption should a transformer or 110 kV line section experience a short circuit fault Furthermore, the use of ground switches in lieu of 110 kV circuit breakers results in fault clearing times of 1 0 to 1 5 seconds Such long clearing times increase the duty on the transformers, conductors and hardware which can lead to loss of life and early failure Should the automatic protection scheme, which relies on disconnect switches to isolate the faulted circuit, not operate properly, all of the City load served by the southern 110 kV ring will be interrupted Consumers served from the southern 110 kV system will experience a prolonged outage The faulty equipment would need to be found and isolated manually before the process of re-energization of the southern 110 kV facilities and load pick-up could begin

A similar situation as described above exists in other areas of the important 110 kV ring that serves as the main source of power supply to the City of Bishkek The following table lists the substations and transformer capacity installed in the northwestern section of the ring located between the circuit breakers installed at the Kyzyl Asker and Glavnaia 110 kV substations Three transformers at two substations are solidly tapped off the 110 kV transmission line between Kyzyl Asker and Glavnaia

NORTHWEST RING 110 KV SUBSTATIONS	INSTALLED TRANSFORMER CAPACITY (MVA)	110 KV TRANSFORMER GROUND/DISCONNECT SWITCHES	110 KV CIRCUIT BREAKERS
KOSTROMSKAIA	1*25	1	0
NOVO ZAPADNAIA	2*31 5	2	0
TOTAL	**88**	**3**	**0**

A similar situation as described above also exists in other areas served at 110 kV from the Glavnaia substation and Bishkek TES 1 plant The following table lists two substations and their installed transformer capacity served radially from the Glavnaia substation

RADIAL 110 KV SUBSTATIONS FROM GLAVNAIA	INSTALLED TRANSFORMER CAPACITY (MVA)	110 KV TRANSFORMER GROUND/DISCONNECT SWITCHES	110 KV CIRCUIT BREAKERS
KARAGACHEVAIA	2*25	2	0
MOLODOGVARDEISKAIA	1*16	1	0
TOTAL	**66**	**3**	**0**

A similar situation exists in areas served at 110 kV from the Bishkek TES 1 plant The next table lists two substations and their installed transformer capacity served radially from the Bishkek TES 1 plant

RADIAL 110 KV SUBSTATIONS FROM BISHKEK TES 1	INSTALLED TRANSFORMER CAPACITY (MVA)	110 KV TRANSFORMER GROUND/DISCONNECT SWITCHES	110 KV CIRCUIT BREAKERS
VOSTOCHNAIA	2*25	0	2
YUZHNAIA	2*40	2	0
TOTAL	**130**	**2**	**2**

A similar situation exists in another area served at 110 kV from the Bishkek TES 1 plant The substations in the eastern area of the city are served by the 110 kV double circuit line connecting the Bishkek TES 1 plant and the Kant substation located to the east of the city The next table lists three substations and their installed transformer capacity connected between the circuit breakers installed at the Bishkek TES 1 plant and the Kant substation

EASTERN 110 KV SUBSTATIONS FROM BISHKEK TES 1	INSTALLED TRANSFORMER CAPACITY (MVA)	110 KV TRANSFORMER GROUND/DISCONNECT SWITCHES	110 KV CIRCUIT BREAKERS
PROMYSHLENNAIA	1*31 5, 1*40	2	0
ENERGETICHESKAIA	2*25	2	0
ALAMEDIN	1*40, 1*25	2	0
TOTAL	**186 5**	**6**	**0**

System Performance with the System Protection Upgrade

The project is planned to improve the reliability of the Bishkek power supply system by replacing the slow acting ground switch/disconnect switch protection system with high speed relays and 110 kV circuit breakers The modernization of this outdated protection system through the installation

of 110 kV circuit breakers and related modern relays will improve the performance of the Bishkek power supply system

Benefits of the System Protection Upgrade Project

The system protection upgrades outlined above will significantly improve the reliability of power supply to Bishkek The installation of circuit breakers on the high voltage side of each transformer as proposed will isolate the transformer experiencing a short circuit fault nearly instantaneously, thus, leaving the 110 kV transmission grid and the nearby substations intact The minimization of interruptions to nearby customers will improve customer service and reduce outage times Thus, the improved reliability (less customer service interruptions) will increase the revenues to the KNEHC, assuming proper billing and collection procedures are implemented An estimate of the added revenue resulting from reduced outages and restoration times is provided in the economic analysis section

The installation of 110 kV circuit breakers and related relay modifications will also reduce the stress on existing transformers and other station equipment since the fault clearing time will be reduced from one minute or more to less than one second Life extension of transformer and other substation equipment is difficult to quantify It is well known, however, that less exposure to prolonged faults will improve the life of electrical equipment, especially when the equipment is already heavily stressed because of inadequate maintenance practices

Finally, the installation of the 110 kV circuit breakers is expected to improve the flexibility of scheduling maintenance since the transformer can be cleared locally without disturbing the 110 kV transmission ring The operation and maintenance expenses associated with repair or routine maintenance of the substation is expected to be reduced since the equipment will experience much less stress as a result of the improvements recommended in the 110 kV system protection upgrade

Future Developments

The Ala Archa project includes the construction of three 110 kV double circuit lines in the southwest area of the city The Ala Archa project will significantly change the configuration of the 110 kV transmission system The Ala Archa project also includes 110 kV line construction to connect the Lenins Plant and Yuzhnaia substations

The improvements proposed in this project must be coordinated with the Ala Archa project and other elements of the transmission and distribution improvement program to ensure proper integration from a system planning and engineering design perspective This would include the proposed reinforcements at the Selekccionnaia and Orto Alysh 110 kV substations that are also part of the transmission and distribution improvement program

Transformer Replacement/Addition Projects

Project Description

This element of the proposed transmission and distribution reinforcement program involves the replacement or addition of transformer capacity to provide relief to overloaded transformers

Many transformers in Kyrgyzstan are experiencing very heavy loadings as a result of increased consumer demands and the absence of improvements in the past few years The project involves the installation of additional transformer capacity at the Orto Alysh, Selectro, Selekccionnaia and Novo Troickaia substations as summarized in the following table

SUBSTATION	EXISTING TRANSFORMER (MVA)	FOLLOWING UPGRADE (MVA)	REMARKS
ORTO ALYSH 110/35/10 KV	1*25	2*25	INCLUDES THE LOOP IN OF THE VODOCANAL-DZHAL 35 KV LINE
SELECTRO 35/10 KV	1*4	6 3	REMOVE 35/0 4 KV, 4 0 MVA TRANSFORMER
SELEKCCIONAIA 110/10 KV	1*16	2*16	
NOVO TROICKAIA 110/35/10 KV	2*25	2*40	REMOVE AND REPLACE TRANSFORMERS
TOTAL	**95**	**168 3**	

Project Cost

The estimated total cost for the proposed improvements at the Orto Alysh, Selectro, Selekccionaia and Novo Troickaia substations is 5 0 million USD

System Performance without and with the Transformer Upgrades

The existing transformers at Orto Alysh, Selectro, Selekccionaia and Novo Troickaia substations have all experienced overloads The continued overloading of these transformers will result in their failure Since no spare transformer capacity is provided for these substations, the failure of any one of the transformers will result in extended disruption of electric service to consumers supplied from these substations The replacement of the transformers will avoid the overloads and make available the overloaded transformers for use elsewhere on the Kyrgyz energy system

Future Developments

The proposed transformer upgrades at the four stations will provide capacity for future load growth It is expected that the transformers released by this project will be maintained as needed and reinstalled elsewhere on the system so as to relieve other overloaded transformers

Procurement of Tools, Spare Parts and Metering Equipment

Few spare parts are available at the KNEHC to make emergency or maintenance repairs of transmission and distribution equipoment The shortage of spare parts is especially acute with respect to the distribution system facilities Few spare parts are available to repair or replace damaged distribution cables, low voltage switchgear, transformers and hardware The transmission and distribution linemen have few specialized tools available to perform regular maintenance and repair of transmission and distribution facilities The unavailability of spare parts and adequate tools and test equipment result in poor customer service and lengthy repair

times following forced outages of system facilities The project includes approximately $2 million for the procurement of the most urgent spare parts, tools and equipment according to priorities established by the KNEHC with acceptance and approval by the lending institutions The benefits of this part of the project include improved safety for KNEHC workers, increased customer satisfaction and reduced customer outage and service restoration times

It is reported that more than 125,000 unmetered consumer connections have been added to the KNEHC distribution grid The project also requests approximately $1 1 million for the purchase and installation of 100,000 metering devices so that this situation can be remediated Installation of the metering devices and establishment of a meter standards and related billing and accounting programs will provide increased revenue to the company The value of the increased revenue resulting from proper metering and billing for energy use is estimated in the economic analysis section

Economic Analysis

Overview

An economic analysis of the transmission and distribution system reinforcement program was carried out to assess the overall benefit/cost performance The analysis evaluated the expected economic benefits and compared them against the expected financial commitments The evaluation also determined the expected internal rate of return for the recommended transmission and distribution program

For the transmission and distribution program the costs include capital expenditures and future operation and maintenance expenses associated with the proposed facilities Quantifiable benefits of the proposed program include (1) energy savings due to loss reduction, (2) deferred costs of new future generation capacity otherwise needed to supply the losses, and (3) availability of new power supply capacity resulting from the addition of new facilities and the relocation of freed-up transformer capacity to other existing facilities Less readily quantifiable reliability benefits are discussed in the following section

Assumptions

The assumptions used to determine the costs and benefits associated with the transmission and distribution system reinforcement program are described in this section

Costs

o *Capital Costs*

The capital cost of the project are phased in according to the forecast of capital expenditures prepared for the transmission and distribution program

o *Operation and Maintenance Cost*

Operation and maintenance expenses are assumed to be 1% of the total capital expenditures

Benefits

o Loss Reduction

The energy savings resulting from a more efficient system The value of the energy saved is calculated according to the following formula

Value = [Losses]*[Loss Factor]*[8760]*[$/MWH]

The following are assumed

- Load Factor = 0 65
- Loss Factor = 0 46 (based on 15 (Load Factor) + 85 (Load Factor)^2)
- $/MWH = $28 00 (2 8 cents per kWH) estimated as variable cost of generation from the TES plant
- The losses are assumed to increase proportionally to the square of the growth in peak demand as forecast for the first five years and held constant thereafter
- Forecasted growth in peak demand = 2 2%/year

o Deferred Generation Capacity

The value of the future generation capacity that can be deferred indefinitely due to a reduction in losses New generation capacity is needed by 2002 The annual savings associated with new generating capacity deferment are calculated as follows

Value = (0 12)*($626)*(12,200)

The following are assumed

- Generation Unit Cost = $626/kW
- Carrying Charge = 12%/year
- New Generation Required in 2002
- Total loss reduction = 12,200 kW
- Value held constant through end of analysis

o Revenue Enhancement from Improved System Reliability Associated with 110 kV System Protection Ugprades

The 110 kV circuit breaker additions and associated relay improvements, collectively the system protection upgrades, will reduce the customer service interruptions and improve the service quality following foced outages of 110/lower voltage transformers An economic value associated with reduced service interruptions and reduced customer service restoration times following disturbances can be calculated based on the added revenue (realization) opportunities available to the company The failure of the existing ground switch/disconnect switch protection scheme can

result in service disruptions to many customers since fault clearing must be done remotely from the affected transformer Failure of the scheme to operate properly can disrupt loads for extended periods of time until the cause is determined and customer restoration begins An approximate value of reduced customer service interruptions and shortened restoration times is calculated as follows

Value = (P1) * (P2) * (L1) * (T1) * (R1)

Where
P1 = Expected No of transformer failures
P2 = Probability of failure of the automatic protection scheme to clear faulted transformer
L1 = Loss of MW load caused by service interruptions
T1 = Restroation time following service interruptions
R1 = Net Realization (profit)/MWH, estimated at $16/MWH

The following are assumed

	Service Area				
	Southern Ring	Northwest Ring	Stations served from Glavnaia Station	Stations served from Bishkek TES1	Eastern Stations Served From Bishkek TES1
1 # of Transformers	10	3	3	4	6
2 Expected number of transformer faults'	1 0	0 3	0 3	0 4	0 6
3 Expected loss of load in MW	276	88	66	130	186
4 Time required to restore service in hours	12	12	12	12	12
5 Expected net realization per MWH	$16	$16	$16	$16	$16
6 Expected revenue enhancement	$53,000	$5,100	$3,800	$10,000	$21,000

* Assuming 10% forced outage rate per year for the 110/low voltage transformers

o *Capacity Supply Value of Replaced Transformers (Ability to Serve More Load)*

Ability to meet new load growth by relocating the replaced transformer to another part of the system Value is given for the incremental increase in capacity The value is calculated each year by the following formula

Value = [Inc MW load]*[Load Factor]*[8760]*[$/MWH]
where Inc MW Load = yearly increase in peak loading on the new facility
Load Factor = 0 65
$/MWH = $16 00 (1 6 cents per kWH) estimated as consumer willingness to pay less variable cost of generation

The loading on the new facility is allowed to increase each year until the rating is reached The number of years it takes to reach the rating depends on the load area being served and the forecasted peak demand load growth The number of years can be calculated by the following formula

<u>For distribution type transformers.</u>

Rating = [Existing Loading]*[1 + 0 022]^n
where n = number of years before transformer is at rated capacity

<u>For transmission type transformers and lines.</u>

Existing Area Load + Inc Capacity = [Existing Area Load]*[1 + 0 022]^n
where Inc Capacity = the excess capacity available after the new facilities are added to the system
n = number of years before incremental capacity is used up

The value of the new supply capacity is held constant once the incremental capacity is used

o *New Transmission Supply Capacity*

Ability to meet new load growth as a result of adding new facilities to the transmission system Value is given for the incremental increase in capacity The calculation of the value of this new capacity is identical to the foregoing item above

o Revenue Enhancement from Installation of Metering Devices

The installation of metering devices and the preparation of comprehensive billing and collection procedures will increase the revenues available to the KNEHC The value of the revenue enhancement is estimated as follows

Value = (N1) * (U1) * (R1)

Where
N1 = Number of new meter installations (100,000)

U1 = Average customer usage (2 76 MWh/year)
R1 = Net Realization (Profit)/MWh, estimate at $16/MWh

o Revenue Enhancement from the Reliability Improvements associated with the Ala Archa Project

The addition of the Ala Archa 22-/110 kV station will improve the reliability of power supply to loads in the city of Bishkek and load areas to the east of the city of Bishkek TES-1 plant These load centers will be less susceptible to power outages since the exposure to 220 kV and 110 kV line outages is reduced For example, the Ala Archa station will reduce the amount of load affected by the outage of the Bishkek to Kyzyl Asker 110 kV line since the line will be routed through the new Ala Archa substation

Improved reliability of the transmission system provides tangible benefits to customers as their number of service interruptions per year will be decreased following the addition of the Ala Archa station The increase in power supply reliability also will benefit the KNEHC as fewer service interruptions will increase revenues, as well as improve customer satisfaction levels The value of the revenue enhancements can be estimated as follows

value = ((N1) * (D1) + (N2) * (D2)) * L1 * R1

Where
N1 = Average number of scheduled outages per year
D1 = Average duration of scheduled outage
N2 = Average number of forced outages per year
D2 = Average duration of forced outages
L1 = Loss of MW load caused by service interruptions
R1 = Net Realization (profit)/MWH, estimated at $16/MWH

Net Present Value Calculation

The first step in determining the benefit/cost relationship for this project involved a calculation of the net present values of the benefits and costs of the proposed program The analysis was performed by calculating the net present value (NPV) of the costs and benefits and then calculating the difference between the two This difference provides an analytical foundation to determine whether the target rate of return is achieved A net present value equal to or greater than 0 indicates the internal rate of return is greater than the target level

The net present value analysis assumed a five year phase-in period for the improvement program which starts in 1995 and extends through 1999 A twenty five year horizon is assumed which takes the analysis out through the year 2024 A discount rate of 12% and cash flow at the end of each period were assumed The detailed results of the analysis are provided in the attached table, "Economic Analysis "

As shown in the table, the net present value of the costs is estimated to be $16 9 million This compared to the $42 million net present value of the benefits which suggests the transmission and distribution program clears the assumed hurdle rate of 12% The difference between the benefits and costs equates to an internal rate of return of approximately 29 2% for the transmission and distribution program

Reliability Considerations

The projects that comprise this transmission reinforcement program will improve the reliability and quality of electric power supply to consumers The reliability of power supply will become increasingly important in the Kyrgyz Republic as the Nation pursues its economic development program in a competitive market place The importance of a reliable electric power supply system and the problems associated with an unreliable system are discussed briefly below

Reliable Electric Power Supply

Over the years, the reliable supply of electricity has become one of the main engines driving societies forward, increasing economic productivity, and improving health, safety, comfort and general welfare Electricity is essential in home life, in the work place, and in sustaining health, safety, sanitation and transportation systems Economic growth and its resultant benefits to society are intimately coupled with growth in electricity usage A high degree of electric service reliability is not accidental High reliability comes from past and on-going efforts by electric utilities to plan, design, construct and coordinate their electric system development to meet present and projected demands for electric power and energy

ECONOMIC ANALYSIS -- $1995 Constant ($000)

YEAR OF COST / BENEFIT

	1995	1996	1997	1998	1999	2000	2001	2002	2003	2004	2005	2006	2007	2008	2009	2010	2011	2012	2013	2014	2015	2016	2017	2018	2019	2020	2021	2022	2023	2024
COSTS																														
Capital	0	1068	6421	11563	4691	743	200	0	0	0	0	0	0	0	0	0	0	0	0	0	0	0	0	0	0	0	0	0	0	0
O & M @ 1% of capital	0	0	0	18	107	215	215	215	215	215	215	215	215	215	215	215	215	215	215	215	215	215	215	215	215	215	215	215	215	215
Total (A)	0	1068	6421	11581	4798	958	415	215	215	215	215	215	215	215	215	215	215	215	215	215	215	215	215	215	215	215	215	215	215	215
NPV (A) 16927																														
BENEFITS																														
Loss Reduction @ $0.028/kWh																														
Selectro 1997	0	0	11	11	11	11	11	11	11	11	11	11	11	11	11	11	11	11	11	11	11	11	11	11	11	11	11	11	11	11
Seleccionnaia 1997	0	0	11	11	11	11	11	11	11	11	11	11	11	11	11	11	11	11	11	11	11	11	11	11	11	11	11	11	11	11
Orto Alysh 1998	0	0	0	113	113	113	113	113	113	113	113	113	113	113	113	113	113	113	113	113	113	113	113	113	113	113	113	113	113	113
Novo Troickaia 1998	0	0	0	11	11	11	11	11	11	11	11	11	11	11	11	11	11	11	11	11	11	11	11	11	11	11	11	11	11	11
Chuiskaia 1998	0	0	0	677	677	678	678	678	679	679	679	679	679	679	679	679	679	679	679	679	679	679	679	679	679	679	679	679	679	679
Ala Archa 1999	0	0	0	0	564	564	565	565	565	566	566	566	566	566	566	566	566	566	566	566	566	566	566	566	566	566	566	566	566	566
Total	0	0	23	824	1388	1389	1390	1390	1391	1391	1391	1391	1391	1391	1391	1391	1391	1391	1391	1391	1391	1391	1391	1391	1391	1391	1391	1391	1391	1391
NPV 7616																														
Deferred Generation Capacity	0	0	0	0	0	0	0	916	916	916	916	916	916	916	916	916	916	916	916	916	916	916	916	916	916	916	916	916	916	916
NPV 3200																														
Reliability Improvements																														
System protection upgrades	0	0	0	45	93	93	93	93	93	93	93	93	93	93	93	93	93	93	93	93	93	93	93	93	93	93	93	93	93	93
Ala Archa project	0	0	0	0	0	450	450	450	450	450	450	450	450	450	450	450	450	450	450	450	450	450	450	450	450	450	450	450	450	450
Total	0	0	0	45	93	543	543	543	543	543	543	543	543	543	543	543	543	543	543	543	543	543	543	543	543	543	543	543	543	543
NPV 2498																														
Capacity Supply Value of Replaced Transformers																														
Novo-Troickaia	0	0	0	0	80	82	84	86	87	89	91	93	95	98	100	102	104	106	109	111	114	116	119	121	124	127	129	132	135	138
Selectro	0	0	0	0	0	0	0	0	0	0	0	0	0	0	0	0	0	0	0	0	0	0	0	0	0	0	0	0	0	0
Total	0	0	0	0	80	82	84	86	87	89	91	93	95	98	100	102	104	106	109	111	114	116	119	121	124	127	129	132	135	138
NPV 472																														
New Transmission Supply Capacity																														
Novo-Troickaia	0	0	0	0	80	82	84	86	87	89	91	93	95	98	100	102	104	106	109	111	114	116	119	121	124	127	129	132	135	138
Orto Alysh	0	0	0	0	26	27	27	28	28	29	30	30	31	32	32	33	34	35	35	36	37	38	39	39	40	41	42	43	44	45
Seleccionaia	0	0	0	26	27	27	28	28	29	30	30	31	32	32	33	34	35	35	36	37	38	39	39	40	41	42	43	44	45	46
Selectro	0	0	0	14	14	15	15	15	16	16	16	17	17	17	18	18	19	19	19	20	20	21	21	22	22	23	23	24	24	25
Ala Archa	0	0	0	0	0	952	973	994	1016	1039	1061	1085	1109	1109	1109	1109	1109	1109	1109	1109	1109	1109	1109	1109	1109	1109	1109	1109	1109	1109
Chuiskaia	0	0	0	0	501	512	523	535	547	559	571	584	596	609	623	623	623	623	623	623	623	623	623	623	623	623	623	623	623	623
Total	0	0	0	40	648	1615	1650	1686	1723	1761	1800	1840	1880	1897	1915	1919	1923	1927	1931	1936	1940	1945	1949	1954	1959	1964	1969	1974	1980	1985
NPV 8401																														
Enhanced Revenue																														
Meter Installation	0	0	0	883	1766	2650	3533	4416	4416	4416	4416	4416	4416	4416	4416	4416	4416	4416	4416	4416	4416	4416	4416	4416	4416	4416	4416	4416	4416	4416
NPV 19922																														
Total (B)	0	0	23	1792	3976	6278	7199	9038	9077	9117	9158	9200	9242	9261	9281	9287	9293	9300	9307	9313	9320	9327	9335	9342	9350	9357	9365	9373	9382	9390
NPV (B) 42009																														
Total (B-A)	0	1068	-6398	9789	-822	5320	6784	8823	8862	8903	8943	8985	9027	9046	9066	9072	9079	9085	9092	9098	9105	9112	9120	9127	9135	9142	9150	9158	9167	9175

NPV (Benefits Costs) = 25082

IRR (Benefits Costs) = 29.2%

Loss Multiplier	113
Capacity Multiplier	91
Demand Growth	2.2%

It is expected that the Kyrgyz National Energy Holding Company (KNEHC) will have a legal obligation to provide reliable electric service for the safety and security of the public served KNEHC must plan to provide and fund adequate generation, transmission and distribution facilities to fulfill that obligation Equally important, in planning to meet the needs of its customers, KNEHC must be concerned with the safety and security of operation of the system Without adequate security (the ability of the power system to withstand sudden disturbances), the trip-out of a transmission facility in one area can affect other parts of the system and could ultimately result in cascading failure throughout the service area and into the service area of other Nation's A cascading failure of the transmission network recognizes no corporate or national boundaries

Impacts of an Unreliable Electric Power Supply

Reliable electric service is important to customers because it reduces the chances of service interruptions which have real costs (e g lost work time, food spoilage, equipment damage, etc) Thus the reliability of electric service, or lack thereof, will be an important factor influencing the health and strength of a Nation's economy

Unreliability is characterized by service interruptions, which may include complete loss of service (outage), or degraded service quality (low voltage) The costs of unreliability are the costs incurred by customers in the event of an electric service interruption The costs of unreliability are not uniform but will vary from customer to customer For example, some industrial plants, such as light bulb or steel manufacturers, may incur damage to production facilities in addition to losing their work-in-process, employee time, etc as a result of even a short outage Conversely, some government service or commercial customers, such as bakeries, may incur only lost employee time, lost sales opportunities, and customer good will

As important as reliable electric power supply is to the well-being of the economy, it is equally, if not more important to the health, safety and welfare of the public In the health area, electricity is vital to the smooth functioning of hospitals, water purification and sewage treatment facilities, to name a few In the safety area, electricity powers traffic signal and street lighting systems as well as communication systems used by public agencies such as fire and police departments, and radio and television broadcasters

It is difficult to put a dollar value on these and other life impacting functions It is important, however, that these factors are considered when planning and valuing improvements to the transmission and distribution system

2 2 LOAD FORECAST, ELECTRICAL AND DISTRICT HEATING

Energy Demand Forecasts for the City of Bishkek (1995-2005)

The economies of all five central Asian republics including Kyrgyzstan are in a state of transition due to the collapse of the former Soviet Union Disruptions in fuel supplies between the republics, industrial plant closures, skilled labor migration and other changes have created a difficult environment for business and industries to function This has contributed to a drastic reduction in industrial energy demand The industrial energy consumption has dropped by more than 40 percent during the 1991-94 period As a result, household incomes have dropped significantly due to substantially increased unemployment The population has shifted to electricity for household heating and cooking needs due to lack of natural gas supplies, the low price of electricity and, the inadequacy of the current district heating system as a heat source The large electrification rate in Kyrgyzstan has also fueled the rapid switch to electricity for heating and cooking All these factors contribute to significant uncertainties in projecting future electric and thermal demand over the next decade

Burns and Roe believes that energy consumption in Bishkek has reached its minimum, and is unlikely to decline further In the short term (next two years), the trend in increased use of electricity for residential heating due to inadequacy of hotwater heating supply may continue, but it is anticipated that once the Bishkek district heating system is rehabilitated and modernized, this trend will reverse itself Of course, the gradual increase in energy prices will dampen the demand and will encourage energy conservation by the population The following paragraphs describe the electric and thermal demand projections in more details The thermal demand is broken down further into district heating demand and industrial steam system demand

Historical Electric Energy Consumption Trends

Residential (population) electric energy consumption has grown rapidly since 1973 Between 1973 and 1990, energy consumption by households increased at an average annual rate of 6 9 percent Over the 1991 through 1994 period, the average annual growth rate of consumption increased to 29 5 percent, with acceleration in rates of consumption being attributed to the increased usage of electricity as a source for home heating and cooking Many of the urban residents have typically relied on hot water for heating, but this consumption pattern is changing rapidly in response to insufficient heat supply from the TES-1 plant and Bishkek District Heating System due to lack of fuel There has also been increased electrification in the rural areas of the country This increased consumption by the residential sector will have a very distinct effect on the seasonal demands

Between 1973 and 1990, the historical electric energy consumption pattern for those parts of the economy included in other sectors, such as government facilities, schools, and banks sectors increased at an average annual rate of 5 3 percent Between 1991 and 1994, however, the consumption declined at an average rate of 1 7 percent per year, which reflects the effects of the economic upheaval that is being experienced during the transition period towards a market driven economy

Between 1973 and 1990, the agricultural electric energy consumption increased at an average rate of 9 3 percent, with industries in this sector playing a vital role in the Kyrgyz economy When the economy slowed during the initial stages of the period of transition to a market economy, the electric energy consumption by the agricultural sector decreased at an average rate of 8 4 percent

Industrial electrical energy consumption increased at an average annual rate 3 6 percent between 1973 and 1990 The industrial production during this period was controlled by the Soviet Union and some inefficient plants were allowed to operate The local inefficient industries lost their federal government subsidies when Kyrgyzstan declared its independence from the former Soviet Union In addition, the currency exchange problems and diminished need for defense related plants, as well as other factors, all combined to adversely affect the industrial sector Between 1991 and 1994, industrial electric energy consumption decreased at an average annual rate of 16 7 percent Sharp drops in consumption were experienced in the military machine building and electro-technology machine building industries, which saw electric energy consumption decrease by 41 percent and 35 percent, respectively, between 1990 and 1992

The total electric energy consumption in the Kyrgyz Republic increased at an average annual rate of 5 3 percent between 1973 and 1990 As previously discussed, sustained growth in electric energy consumption during the 1973 to 1990 period was experienced in all sectors of the economy During the transition period since independence (1991 to 1994), growth in total consumption decreased at rate of 1 2 percent per year, with large decreases in the industrial and agricultural sectors more than offsetting the substantial gains experienced in the residential sector due to electric resistance heating and cooking

Electric Energy Consumption Forecast 1995-2005

The rate of growth in residential electric energy consumption is expected to slow to 2 1 percent per year, over the next ten (10) year period, which is much slower than experienced during the 1991 through 1994 period The forecast increases in consumption reflect improvements in district heating system and increased availability of fuels at the Bishkek power plant

During the 1995 through 2005 forecast period, the other sectors electric energy consumption is projected to increase at an average annual rate of about 4 0 percent This forecasted growth is stronger than was experienced during the initial years of the transition period to a market economy, but weaker than the historical rate experienced prior to independence

Agricultural electric energy consumption is projected to increase at an average annual rate of 4 4 percent, which reflects a rebound from the recent declines experienced in this sector The forecast is not unduly optimistic and appears to be reasonable

During the 1995 through 2005 period, industrial consumption is projected to increase at an average annual rate of 2 5 percent However, there is slow growth expected in the near term, followed by a more robust expansion after the turn of the century The forecast provides a definitive reversal of fortunes for this sector of the economy The industrial forecast may be optimistic, as the industrial expansion requires many factors to fall into place including a great deal of foreign investment

The total electric energy consumption forecast and history is shown in Table 2-1A Between 1995 and 2005, total consumption is projected to grow at an average annual rate of 2 3 percent the table also shows the energy consumption broken down by sectors

Peak Electric Demand

Peak Demand Trends 1989-1995

The Kyrgyz power system is historically a winter peaking system The shifting of patterns of energy consumption, unavailability of fossil fuels for power plant and heat only boilers, and the unreliability of district heating systems have resulted in driving the winter maximum demands to levels much greater than summer demands

Average monthly peak demands for the Bishkek Electric Network show that the winter months are having much higher peaks, while the summer months are experiencing somewhat lower peaks This pattern of change reflects the increased utilization of electric heating and cooking, electrification of households, and the decreased demand by industrial consumers These data also provide evidence that the load is winter critical and becoming more so over time The summer months exhibit a sharper decrease in peak demand This pattern reflects the industrial losses in the Bishkek area, particularly the defense related production This rate of growth is less than one-half of that experienced by the country as a whole and reflects the effect of decreased industrial consumption in this area Electric heating is rapidly replacing hot water heat in the city and provided more than enough growth to offset the industrial losses

The electric load forecast developed for this study assumes that the existing TES-1 Plant and Bishkek district heating network will be rehabilitated and would provide a higher degree of comfort (space) heating so that the population does not use electric resistance heating to heat their dwellings. This load forecast also assumes that sufficient quantity of fuel will be available at TES-1 plant in the future years to operate the plant at required capacity levels The electric forecast for the city of Bishkek for the next 10 years is shown on the attached Table 2-1 In this table, the Column titled "Transfers" represents power that is transferred from the Bishkek power grid to other parts of Kyrgyzstan Most of this power is transmitted to the northern parts of Kyrgyzstan In addition, very detailed electric power demand and energy consumption forecasts are further covered in section 4 for the entire Kyrgyz Republic

Table 2-1A

Energy (Millions of KWH) Consumption by Sector for the Kyrgyz Republic, 1973 2006

Year	Residential	Growth Rate	Commercial	Growth Rate	Agricultural	Growth Rate	Industrial	Growth Rate	Total	Growth Rate
Actual										
1973	360		474		421		1 921		3 176	
1974	385	6 9	521	9 9	509	20 9	2 112	9 9	3 527	11 1
1975	414	7 5	550	5 6	616	21 0	2 249	6 5	3 829	8 6
1976	436	5 3	603	9 6	712	15 6	2 344	4 2	4 095	6 9
1977	452	3 7	628	4 1	819	15 0	2 369	1 1	4 268	4 2
1978	462	2 2	679	8 1	891	8 8	2 429	2 5	4 461	4 5
1979	482	4 3	702	3 4	933	4 7	2 497	2 8	4 614	3 4
1980	499	3 5	753	7 3	1 045	12 0	2 632	5 4	4 929	6 8
1981	532	6 6	766	1 7	1 055	1 0	2 655	0 9	5 008	1 6
1982	643	20 9	738	-3 7	1 248	18 3	2 663	0 3	5 292	5 7
1983	685	6 5	755	2 3	1 277	2 3	2 714	1 9	5 431	2 6
1984	729	6 4	828	9 7	1 485	16 3	2 872	5 8	5 914	8 9
1985	783	7 4	878	6 0	1 591	7 1	2 960	3 1	6 212	5 0
1986	821	4 9	910	3 6	1 646	3 5	2 990	1 0	6 367	2 5
1987	862	5 0	1 018	11 9	1 611	-2 1	3 134	4 8	6 625	4 1
1988	897	4 1	1 030	1 2	1 681	4 3	3 258	4 0	6 866	3 6
1989	945	5 4	1 111	7 9	1 876	11 6	3 417	4 9	7 349	7 0
1990	1 111	17 6	1 137	2 3	1 913	2 0	3 482	1 9	7 643	4 0
1991	1 455	31 0	1 174	3 3	1 986	3 8	3 509	0 8	8 124	6 3
1992	1 951	34 1	1 314	11 9	1 872	5 7	2 974	-15 2	8 111	-0 2
1993	2 455	25 8	1 220	-7 2	1 846	-1 4	2 464	-17 1	7 985	-1 6
1994	3 159	28 7	1 114	-8 7	1 526	-17 3	2 031	17 6	7 830	-1 9
Forecast										
1995	3 500	10 8	1 100	1 3	1 100	-27 9	2 100	3 4	7 800	-0 4
1996	3 650	4 3	1 125	2 3	1 125	2 3	2 100	0 0	8 000	2 6
1997	3 700	1 4	1 175	4 4	1 175	4 4	2 150	2 4	8 200	2 5
1998	3 800	2 7	1 225	4 3	1 225	4 3	2 200	2 3	8 450	3 0
1999	3 875	2 0	1 300	6 1	1 300	6 1	2 250	2 3	8 725	3 3
2000	3 950	1 9	1 375	5 8	1 375	5 8	2 300	2 2	9 000	3 2
2001	4 000	1 3	1 450	5 5	1 450	5 5	2 375	3 3	9 275	3 1
2002	4 050	1 3	1 525	5 2	1 525	5 2	2 450	3 2	9 550	3 0
2003	4 132	2 0	1 581	3 7	1 581	3 7	2 531	3 3	9 825	2 9
2004	4 215	2 0	1 640	3 7	1 640	3 7	2 614	3 3	10 109	2 9
2005	4 300	2 0	1 700	3 7	1 700	3 7	2 700	3 3	10 400	2 9
Average Annual Growth Rate										
1973 94		10 9		4 2		6 3		0 3		4 4
1973 90		6 9		5 3		9 3		3 6		5 3
1991 94		29 5		-1 7		-8 4		-16 7		-1 2
1995 2005		2 1		4 4		4 4		2 5		2 3

Data Sources Harza Engineering Company "Evaluation of the Hydroelectric Development Program of Kyrgyzstan" November 1993 and data collected and forecast for Burns and Roe Company

TABLE 2-1
Most Probable
Electric Load Forecast

CITY OF BISHKEK			TRANSFERS		TOTAL FORECAST			
Year	Max Demand (MW)	Sales (GWH)	Max Demand (MW)	Sales (GWH)	Max Demand (MW)	Sales (GWH)	T&D Losses %	Generation (GWH)
1995	425	1002	100	350	525	1352	12	1536
1996	436	1052	102	357	538	1409	12	1601
1997	446	1094	104	364	550	1458	12	1657
1998	456	1127	107	375	563	1502	11	1688
1999	466	1161	109	382	575	1543	11	1734
2000	476	1196	111	389	587	1585	11	1781
2001	486	1232	114	399	600	1631	11	1833
2002	496	1269	116	406	612	1675	11	1882
2003	507	1307	119	417	626	1724	10	1916
2004	518	1346	121	424	639	1770	10	1967
2005	527	1386	124	434	651	1820	10	2022

Projection of District Heating Hotwater Demand

The district heating hotwater system study was prepared by European Community Energy Advisory Group (EC EAG)

The estimate of the future district heating needs is based on a forecast of the development in unit heat demand (consumption per person or per m^2) for the future years Concerning the development in number of consumers an increase of about 1% per year is assumed Most of this market development is assumed to take place in two specific areas, namely Microraion JAL in the south/west part of the city (old airport area) and the area north/west of the Frunze factory The proposed rehabilitation and modernization of the Bishkek District Heating system is described as follows

Analyzed Scenarios

The proposed rehabilitation and modernization are described through four different scenarios Scenario 1B and Scenario "Do nothing B", Scenario 1C and Scenario "Do nothing C"

The present district heating system in Bishkek, and the future development if no modernization and market development takes place, is described in the "base case" scenario titled **"Do nothing B"** Scenario 1B which includes the proposed rehabilitation and modernization is compared with the "do nothing B" scenario The two other scenarios, "Do nothing C" and Scenario 1C illustrate the economic effects of a possible future extension of the heat market

Scenario "Do nothing B"

The "Do nothing B" scenario considers a situation (case) where no technical modernization nor the expansion of the Bishkek district heating system is carried out The Bishkek District Heating Enterprise (BDHE) only performs the minimum maintenance to keep the system operational under this scenario

The main features of the "Do nothing B" scenario are

- The network will be rehabilitated and maintained at the present standard throughout the analyzed period (20 years)
- The supply capacity will be maintained at a level corresponding to the consumer demand, including replacement as the present supply units are phased out due to expired life time
- The tariff system will be modernized and cross subsidization between the various consumer groups will be abandoned
- New potential customers within the existing network may be offered district heating, whereas potential customers outside the network will be left to individual or independent district heating systems to meet their heat demand

Scenario 1B

This scenario describes a situation where BDHE actively adapts to the changing techno-economic and socio-economic environment by implementing the proposed rehabilitation and modernization of the system The existing consumers outside the DH network at Microraion "JAL" and near the Frunze HOB are captured as consumers, which is made possible as the variable flow operation is introduced, and as these local networks are close to BDHE's network BDHE, however, in this scenario does nothing to expand its market share as when these two energy districts grow in future Table 2-2 describes the most probable District Heating Load Forecast

The main features of "Scenario 1B" are

- The network will be rehabilitated and maintained throughout the analyzed period (20 years), and it will be extended to cover the new two potential heat markets
- The system will be modernized, including the introduction of variable flow operation, automatic monitoring and control (SCADA)
- BDHE will develop its organization towards a modern service organization utilizing modern management and administrative skills and tools, and also developing its "customer service" capability
- The supply capacity will be maintained to cover the consumer demand and it will be expanded to cope with the potential increase in the heat market
- BDHE will actively develop a tariff system

Scenario "Do nothing C"

This scenario describes a situation where the consumer market grows in future in the two districts "JAL" and "Frunze", and where these new consumers are left to seek individual solutions for their heat demand BDHE only does the minimum to survive like in scenario "Do nothing B"

Scenario 1C

Scenario 1C illustrates the same development as Scenario 1B except for the "market approach" In this scenario BDHE actively invests in network extensions to capture the new potential customers outside the current service area The scenario will thus in comparison with scenario 1B illustrate the economic effect of an "aggressive" versus a "passive" market approach, whereas the comparisons with the "Do Nothing" scenarios illustrate an "active" versus a "passive" adaption to the changing techno-economic and socio-economic environment

TABLE 2-2
Most Probable
District Heating Load Forecast

Scenario 1B

	Bishkek District Heating System			Local District Heating System		
Year	Maximum Demand (Gcal/hr)	Heat Generation (Tcal/yr)	District Heat Sales (Tcal/yr)	Maximum Demand (Gcal/hr)	Heat Generation (Tcal/yr)	District Heat Sales (Tcal/yr)
1995	900	2667	2000	46	104	94
1996	935	2800	2100	53	120	108
1997	985	2901	2285	0	0	0
1998	968	2841	2273	0	0	0
1999	941	2675	2230	0	0	0
2000	914	2567	2209	0	0	0
2001	888	2535	2188	0	0	0
2002	861	2515	2168	0	0	0
2003	834	2495	2148	0	0	0
2004	808	2475	2128	0	0	0
2005	782	2455	2108	0	0	0

Industrial Steam System Demand

The Bishkek Industrial Steam Supply network consists of approximately 57 kilometers of pipelines and supplies the process steam to various industries in Bishkek It has approximately 38 kilometers of aboveground pipes, and 19 kilometers of underground pipes The peak steam load for the system was 350 tons/hour during the Soviet era, but at the present time the steam load has dropped to less than 100 tons/hour due to curtailment of industrial production as a result of economic slowdown Due to significant dropoff in industrial steam demand, the heat losses from the steam supply system have skyrocketed resulting in increased steam condensation The deterioration of steam line insulation has also contributed to these heat losses The excessive length of steam lines from the TES-1 plant contributes to heat losses, condensation and steam leaks resulting in increased energy losses

At the present time, the farthest steam consumer is located 9 kilometers away from the Bishkek Plant The total industrial steam consumption has dropped to less than 25% of the peak system flow of the late eighties, and a significant number of steam customers have gone out of business permanently Some of the steam distribution lines have lost 60 to 80% of their steam customers permanently

The attached Table 2-3 provides the projected industrial steam demand forecast for years 1995 through 2005 The industrial steam demand forecast was developed on a generation basis (at the TES-1 plant boundary) The heat losses in the steam supply lines are estimated at 30% without rehabilitation of the lines The demand forecast was jointly developed with BDHE and KNEHC

TABLE 2-3
Most Probable
Industrial Steam Load Forecast

Year	Annual Sales (Tcal/yr)	Maximum Demand (Gcal/hr)	Annual Generation (Tcal/yr)
1995	400	130	571
1996	450	147	643
1997	550	179	786
1998	550	179	786
1999	550	179	786
2000	550	179	786
2001	550	179	786
2002	550	179	786
2003	550	179	786
2004	550	260 9	786
2005	550	277 2	786

2.3 ECONOMIC ANALYSIS OF REHABILITATION ALTERNATIVES

Burns and Roe and the Energy Advisory Group (EAG) have undertaken parallel studies to examine the technical and economic feasibility of rehabilitating the electric generation and district heating systems currently serving the City of Bishkek Burns and Roe's work focused on rehabilitation and modernization of the Bishkek Combined Heat and Power Plant (i e TES-1) and the Energy Advisory Group's work focused on the District Heating Distribution System

The findings and recommendations developed by the Energy Advisory Group are presented in their report titled "Energy Savings in District Heating-Bishkek District Heating System" (See Appendix I) The assessments performed by Burns and Roe and the resulting findings and recommendations are presented in this report Based on the work performed by Burns and Roe and the Energy Advisory Group, a number of specific recommendations for improving performance, together with estimates of capital costs, have been developed The primary purpose of this analysis is to examine the economic attractiveness of implementing those recommendations The economic analysis specifically covers rehabilitation of TES-1 and the District Heating System The economic analysis of alternatives to continued operation of the Bishkek District Heating Systems are presented in Section 2 4 The purpose of this economic analysis is to examine how the implementation of the rehabilitation recommendations will affect the total cost of supplying electric energy, district heat, and process steam, and whether the proposed investments are elements of the least cost plan for meeting the future needs of the city of Bishkek and surrounding areas

The TES-1 plant is a combined heat and power plant and is used to concurrently serve electric, process steam and district heating loads Consequently, the estimates of future production costs require a concurrent modeling of electric, process steam and district heat For this reason, Burns and Roe developed a computer model for projecting future annual costs in which production costs (i e , fuel costs) are estimated based on dispatching of electric and thermal supply resources to concurrently serve electric, process steam and district heating loads while minimizing total fuel costs

2 3.1 Economic Analysis Model Description

An economic model was developed by Burns and Roe to simulate the constant dollar annual cost associated with serving future electric, district heat and process steam loads for the city of Bishkek The time horizon for the study program was from 1995 to 2005 to enable the model to capture the effects of the proposed capital investments and load growth to 2005 The economic analysis was extended to 2014 using a "frozen load" methodology to enable the capture of end effects without obscuring the analysis with the effects of longer term load growth and resulting capacity expansion requirements

The model also examines the adequacy of production resources to meet future loads For this purpose the criterion assumed is that installed capacity should be adequate to meet maximum annual demand with the largest production unit out of service, provided that in no case the system reserve margin at the time of maximum demand be less than 15 percent This same criterion is applied to both electric supply and thermal supply Should these criteria not be met, new

thermal/electric production facilities are added to satisfy the adequacy of installed capacity criteria

In the recommended program for the rehabilitation TES-1, Turbine Generator No 11 at installed in 1998 With this installation, the electric generating capacity is sufficient to satisfy the installed capacity criterion through the year 2005 Without this installation, the adequacy of installed capacity criterion indicates that, under the most probable electric load forecast, the systems will have an electric capacity deficiency in the year 2002 A number of electric supply alternatives were considered for serving this need including installing a steam turbine generator of similar design to TG No 11 at the TES-1 plant, adding natural gas fired combined cycle capacity and expansion of the electric grid supply Of these alternative, adding a new steam turbine generator similar to TG No 11 was found to be the least cost alternative

Thermal energy resources in the Bishkek District Heating system are more than adequate to meet projected thermal demand through the year 2005 The local district heating system, currently isolated the Bishkek District Heating System, serves its loads with heat only boiler (HOB's) at the Frunze and JAL Plants For the purpose of this analysis, 50 Gcal/hr natural gas fired heat only boilers are assumed to be installed when necessary to meet the adequacy of installed capacity criteria

The figures of merit used to compare the economics associated with rehabilitation plans are the Net Present Value (NPV) of annual costs and the Economic Internal Rate of Return (EIRR) The annual costs used in the determination of NPVs and EIRRs include capital investments, operating and maintenance costs, fuel costs, and purchase power costs

In addition, the economic model is also used to estimate partial annual tariffs for electric sales, process steam sales and district heat sales For the purpose of tariff projections the model incorporates certain assumptions with regards to allocating investment costs and annual production expenses to electric production, process steam production and district heat production

The following provides an overview of the model methodology Specific assumptions and parameters used in the model are presented in Section 2 3 3 and in the economic analysis results presented in Appendix II

Investment Costs

Annual investment costs used in the model include direct capital costs estimated at 1995 pricing levels, real escalation, an allowance of 2 5 percent of direct costs for technical assistance and training, and an allowance of 10 percent of direct capital costs for physical contingency Direct costs have been estimated by source into foreign and local components of material, labor and equipment Direct costs, estimated at 1995 pricing levels, were converted to US dollars based on currency conversion rates of 4500 Rouble = 1 US dollar and 10 5 Soms = 1 US dollar

Carrying Charges

Annual carrying charges associated with future capital investment projects have been estimated based on capital recovery of loan requirements at a constant dollar cost of capital over periods consistent with, but somewhat less than, the expected life of each investment The effects of income taxes, property taxes, VAT taxes, and insurance have not been included in the determination of annual carrying charges and are, therefore, not included in the estimated partial tariffs Loan requirements are determined based on annual investment costs (as described above) with interest during construction from the capital expenditure date to the date of service of each project

O&M Costs

The economic model incorporates operating and maintenance costs for all electric and thermal generating plants and for the process steam and district heating distribution systems The O&M costs include labor costs, material costs and consumable costs which have been estimated taking into consideration current utility practices and the expected savings resulting from implementation of the rehabilitation/modernization projects proposed in this study and in the EAG study (Appendix I)

Fuel and Purchase Power Costs

Production costing is performed so as to minimize the total system fuel cost Current electric supply resources include the TES-1 CHP plant and the electric grid servicing the City of Bishkek Current thermal supplies serving the Bishkek District Heating System include the TES-1 CHP plant, the TES-1 Heat Only Boilers and the TES-2 Heat Only Boilers Also, a portion of the district heating loads of the City of Bishkek, currently isolated from the Bishkek District Heating System, are served by a local district heating system which is supplied with thermal energy from the heat only boiler plants at Frunze and JAL In the "Do Nothing" study cases, the local district heating system remains isolated from the Bishkek District Heating System, whereas in the District Heating System rehabilitation study cases the systems are integrated Process steam loads are served by the TES-1 CHP plant

Because the TES-1 CHP plant serves electric, district heat and process steam loads, a production model was developed to simulate economic dispatch of supply resources taking into account concurrent electric, process steam and district heat loads The model uses daily concurrent load shapes typical of each month The loading of supply resources and the determination of hourly and annual fuel consumption for the Bishkek District Heat System are estimated using the following protocol

1 The TES-1 plant is first dispatched to meet hourly district heating and process steam demand If TES-1 cannot meet the district heat load, the backup/peaking heat only boilers are then dispatched to meet the balance of demand

2 Corresponding to the hourly thermal loads being served by the TES-1 units is a minimum electric capability If the actual electric demand is less than the minimum electric capability, district heat production from the TES-1 CHP Plant is reduced so that the electric production

meets demand and the production from heat only boiler is augmented to makeup the balance If on the other hand, actual electric demand is greater than minimum electric capability, the model loads the TES-1 units to the minimum electric load level and examines the incremental costs associated with serving the balance of electric demand from other available electric supply sources (i e , the balance of TES-1 electric only capability, the electric grid or other future electric supply resources) and selects the lowest cost combination of supply resources to satisfy hourly electric demand

3 Based on the hourly dispatch levels for TES-1, the heat only boilers, the grid and where applicable, new supply resources, the model calculates total hourly fuel consumption and energy supply by supply source and fuel type

4 Dispatch levels and fuel consumption rates are calculated in this manner for each hour of a typical day for each month The hourly values are summed to indicate total typical daily production and fuel consumption The typical daily values are then multiplied by the number of typical days in each month to reflect total annual production and fuel consumption

Production loading levels and fuel consumption rates for the local district heating system, which is currently isolated from the Bishkek District Heating System, are determined using a hourly dispatch model which loads the system heat only boilers in order of minimum production cost taking into account boiler capacities, boiler efficiencies and fuel prices Typical daily, monthly and annual production levels and fuel costs are accumulated in the same manner as described for the Bishkek District Heating System

The dispatch methodology is considered conservative with respect to projecting production costs particularly in the "Do Nothing" cases In these cases production costs may underestimate actual costs for two reasons First, without rehabilitation of TES-1, additional electric supply would need to be provided by the electric grid The supply of electricity from the grid may be limited (below transmission limits) by hydroelectric production constraints Secondly, district heating resources are assumed to be optimically dispatched In the "Do Nothing" cases, without district heating system modernization, such optimization could not be achieved Consequently, production from heat only boilers and total district heat production costs would likely be greater than projected by the model

Annual Tariff Allocations

Annual tariffs for process steam, electric and district heat production are assigned to each account based on incurred cost allocations For most operations and facilities, the cost allocation process is quite simple For example, investment cost carrying charges associated with rehabilitating/modernizing the district heating hot water distribution system serve only the district heating system, therefore the carrying charges are totally allocated to the district heating system Similarly, fuel costs for heat only boilers which serve the district heating system are totally allocated to the district heating system

However, because the TES-1 CHP plant concurrently produces electricity, process steam and district heat, consideration needs to be given to the allocation of investment cost carrying charges, operating and maintenance costs and fuel costs to each type of production

For the purpose of this study, revenue requirements associated with the TES-1 CHP plant are allocated using the following methodology

Carrying Charges and Operating and Maintenance Costs

The allocation of carrying charges and operating and maintenance costs to electric, district heat and process steam is a somewhat subjective exercise, particularly for a CHP plant as complexly configured as TES-1 For the purpose of this study, annual carrying charges and annual operating and maintenance costs are allocated 75 percent to electric production and 12 5 percent each to process steam and district heat production

Fuel Costs

One of the main advantages of combined heat and power production is that the efficiency of production is higher and production costs are lower than if electricity and thermal energy were produced separately in stand-alone facilities The allocation of fuel costs to electric and thermal energy production from a CHP plant can be calculated in any one of a number of ways In the extremes there are two alternative methodologies

The first methodology calculates the fuel costs associated with electric production as if it were produced in an electric only power plant The difference between the total CHP fuel consumption and the electric only power plant fuel consumption is assigned to heat production This approach is of course equivalent to allocating all of the CHP advantage to heat production

The second methodology calculates the fuel costs associated with thermal production as if it were produced in a heat only boiler The difference between the total CHP fuel consumption and the heat only boiler fuel consumption is assigned to electric production This approach is of course equivalent to allocating all of the CHP advantage to electric production

The approach used in this study to allocate CHP fuel costs to electric and thermal production is a shared savings methodology which uses the average fuel costs derived from the two extreme methodology - and, thus provides a sharing of the CHP advantage For this purpose, the model assumes heat only and electric only net generating efficiencies of 87 and 30 percent, respectively The allocation of the resulting thermal production fuel costs to process steam and district heat is done by direct proportioning

2.3 2 Description of Study Cases

The Energy Advisors Group's study (Appendix I) of the Bishkek District Heating Distribution System examined two scenarios for the rehabilitation of the District Heating System Burns and Roe's study of the TES-1 CHP plant resulted in a number of Priority 1 recommendations for plant rehabilitation To examine the economics associated with the various rehabilitation options, eight

(8) cases were identified for study using the economic model Table 2-4 is a matrix identifying the study cases examined

TABLE 2-4

MATRIX OF STUDY CASES

	DISTRICT HEATING SYSTEM SCENARIOS			
TES-1 CHP Plant Scenario	Without Expansion		With Expansion	
	No Rehabilitation or Integration	Rehabilitation and Integration	No Rehabilitation or Integration	Rehabilitation and Integration
No Rehabilitation	1	2	1a	2a
Rehabilitation	3	4	3a	4a

Case 1, 2, 3 and 4 are the base study cases used to examine the economics associated with the investments recommended for the TES-1 CHP Plant and for the Bishkek District Heating System In these cases, the district heating loads include those customers which are served by the Bishkek District Heating System and those customers in the local district heating system which could be served as a result of the recommended investments for rehabilitation/modernization and integration of the two systems The affects of future load growth in the local district heating system and integration of an expanding customer base into the Bishkek District Heating System are not included in these cases since such an integration would require a significant investment for district heating system expansion which is not being considered for funding at this time Nevertheless, the District Heating System investments recommended would be required in advance of additional investment for the expansion of the district heating system Study Cases 1a, 2a, 3a and 4a are sensitivity cases which examine the economics associated with the investments recommended for the TES-1 CHP Plant and for the Bishkek District Heating System together with a future investment(s) for expansion of the district heating system

In all study cases the electric load forecast and process steam forecast are the same

The following briefly describe the study cases

Cases 1 and 1a - "Do Nothing Cases"

Cases 1 and 1a are the "Do Nothing" cases corresponding to the base and sensitivity scenarios for District Heating System expansion In these cases the recommended rehabilitation projects for the TES-1 CHP Plant and for the Bishkek District Heating System are not implemented Furthermore, the Bishkek District Heating System and the local district heating system remain independent Case 1 and 1a correspond to EAG's District Heating System Scenarios "Do Nothing B" and "Do Nothing C," respectively

Cases 2 and 2a - "District Heating System Rehabilitation Only"

Cases 2 and 2a are the District Heating System rehabilitation only cases corresponding to the base and sensitivity scenarios for district heating system expansion In these cases no investments in the rehabilitation of the TES-1 CHP Plant are made Cases 2 and 2a can be compared to Case 1 and 1a to assess the benefit to be derived from the recommended district heating system investments without inclusion of the investments/benefits associated with TES-1 CHP Plant rehabilitation In both of these cases the Bishkek District Heating System is rehabilitated and modernized and the local district heating system is integrated into the Bishkek District Heating System Case 2 examines rehabilitation/modernization and integration without expansion of the customer base, whereas, Case 2a is the sensitivity case which includes the effect of expansion of the customer base A description of the recommended district heating system improvements together with budget cost estimates are presented in Section 2 1 2 Cases 2 and 2a correspond to EAG's District Heating Scenarios 1B and 1C, respectively

Cases 3 and 3a - "TES-1 CHP Plant Rehabilitation Only"

Cases 3 and 3a are the TES-1 CHP Plant rehabilitation only cases corresponding to the base and sensitivity scenarios for district heating system expansion In these cases no investments in the rehabilitation of the Bishkek District Heating System are made Case 3 and 3a can be compared to Cases 1 and 1a (the "Do Nothing Cases") to assess the benefits to be derived from the recommended TES-1 investments without inclusion of the investments/benefits associated with district heating system rehabilitations In both of these cases the Bishkek District Heating System and the local district heating system remain isolated A description of the recommended TES-1 CHP plant improvements together with budget cost estimates are presented in Section 2 1 1

Cases 4 and 4a - Combined Rehabilitation

Cases 4 and 4a considers the combined effects of both TES-1 CHP Plant and District Heating System rehabilitation corresponding to the base and sensitivity scenarios for district heating system expansion Cases 4 and 4a can be compared to Case 1 and 1a (the "Do Nothing Cases") to assess the benefit to be derived from implementing both the TES-1 CHP Plant and the District Heating System recommendations

2 3 3 Modeling Assumptions and Parameters

In the recent past, the lack of funds have restricted fuel purchases and limited TES-1 operation Consequently, some district heat loads have been served by resistance heating using power provided by the electric grid serving the City of Bishkek A key assumption in the analyses of the eight study cases described in Section 2 3 2 is that funds will be available to procure fuels necessary for unrestricted production of the TES-1 CHP plant Other key assumptions and model inputs are discussed in the following paragraphs

Economic/Financial Parameters

All costs are presented in constant 1995 dollars Direct capital costs estimates were determined in terms of foreign and local supply of materials, labor and equipment and converted to US dollar

at 1995 currency conversion rates of 4500 Rouble = 1 US dollar and 10 5 Soms = 1 US dollar Annual investment costs include direct capital costs, allowances of 2 5 percent and 10 0 percent for technical assistance/training and physical contingency, respectively, and real escalation from 1995 to the planned investment date Loan requirements and debt service figures used in the projection of partial tariffs were derived assuming an interest rate of 12 percent per year for both interest during construction and capital recovery calculations

All net present value determinations are based on a constant dollar discount rate of 12 percent per year

Fuel and Purchased Power Prices

Fuel and Purchased Power prices assumed in the analysis of all study cases are presented in Table 2-5

Table 2 5
Fuel and Purchased Power Prices
1995 US Dollars

Energy Type	Unit	$/Unit	$/Gcal
Coal	metric tons	37 0	8 8
Mazut	metric tons	95 0	10 0
Natural Gas	1000 cubic meters	77 0	9 4
Purchase Power	MWh	30 0	-

All fuel prices presented in Table 2-5 are on Lower Heating Value basis All energy prices are in constant 1995 dollars and are assumed to remain at these levels throughout the study period

Real Escalation Rates

The economic model assumes the following real escalation rates in the determination of future costs

Table 2-6
Real Escalation Rates (%/year)

Cost Component	1995-2000	2001-2019
Western Equipment	0 0	0 0
Kyrgyz Labor	16 9	6 6
Kyrgyz Material	1 7	0 9

The real escalation rates for Kyrgyz labor and material are also used to estimate future O&M costs in constant 1995 dollars

Load Forecasts

The load forecasts for electric, district heating and process steam used in the modeling of study cases are presented in Tables 2-7 to 2-12

Table 2-7 presents the electric load forecast used in the analysis of all eight study cases The forecast includes loads anticipated for the City of Bishkek proper as well as expectations for transfer out of the city The basis for the forecast is further described in Section 2 2

Table 2-8 presents the process steam load forecast used in the analysis of all eight study cases The forecast is based on trends for the first 6 months of 1995 which shows a continuation of the decline in steam sales in 1995 to 400 Tcal/yr from 586 Tcal/yr in 1994 In 1996, the downward trend in sales is assumed to be reversed - rising to 550 Tcal/year in 1997 For the purpose of this study steam sales are assumed to remain at the 1997 level throughout the study period The projection of 550 Tcal/year in steam sales in 1997 and beyond represents approximately 40 percent of that experienced in 1991

Tables 2-9, 2-10, 2-11 and 2-12 present the district heating system load forecasts used in the modeling of the study cases

Table 2-7
Most Probable
Electric Load Forecast

Year	Maximum Demand (MW)	Annual Generation (GWh)	Annual Sales (GWh)
1995	525	1536	1352
1996	538	1601	1409
1997	550	1657	1458
1998	563	1688	1502
1999	575	1734	1543
2000	587	1781	1585
2001	600	1833	1631
2002	612	1882	1675
2003	626	1916	1724
2004	639	1967	1770
2005	651	2022	1820

Note.

This electric load forecast excludes electric loads associated with operation of pumps serving the Bishkek District Heating System Without rehabilitation of the Bishkek District Heating System (i e study cases 1, 1a, 3 and 3a) pumping power is estimated at 7 7 kWh/Gcal of heat production In cases with district heating systems rehabilitation (i e , Case 2, 2a, 4 and 4a), pumping power is estimated to decline to 5 6 kWh/Gcal of heat production

Table 2-8
Process Steam Load Forecast

Year	Annual Sales (Tcal/yr)	Maximum Demand (Gcal/hr)	Annual Generation (Tcal/yr)
1995	400	130	571
1996	450	147	643
1997	550	179	786
1998	550	179	786
1999	550	179	786
2000	550	179	786
2001	550	179	786
2002	550	179	786
2003	550	179	786
2004	550	179	786
2005	550	179	786

Table 2-9
District Heating Load Forecast
Scenario "Do Nothing B"

	Bishkek District Heating System			Local District Heating System		
Year	Maximum Demand (Gcal/hr	Heat Generation (Tcal/yr)	District Heat Sales (Tcal/yr)	Maximum Demand (Gcal/hr)	Heat Generation (Tcal/yr)	District Heat Sales (Tcal/yr)
1995	900	2667	2000	46	104	94
1996	935	2800	2100	53	120	108
1997	950	2868	2165	61	138	124
1998	924	2856	2149	71	159	143
1999	897	2845	2134	71	159	143
2000	870	2833	2119	71	159	143
2001	850	2821	2103	71	159	143
2002	826	2809	2088	71	159	143
2003	802	2798	2073	71	159	143
2004	778	2786	2058	71	159	143
2005	754	2775	2042	71	159	143

Table 2-10
District Heating Load Forecast
Scenario "Do Nothing C"

	Bishkek District Heating System			Local District Heating System		
Year	Maximum Demand (Gcal/hr	Heat Generation (Tcal/yr)	District Heat Sales (Tcal/yr)	Maximum Demand (Gcal/hr)	Heat Generation (Tcal/yr)	District Heat Sales (Tcal/yr)
1995	900	2667	2000	46	104	94
1996	935	2800	2100	53	120	108
1997	950	2868	2165	61	138	124
1998	924	2856	2149	71	159	143
1999	897	2845	2134	81	182	164
2000	870	2833	2119	94	210	189
2001	850	2821	2103	108	241	217
2002	826	2809	2088	124	278	250
2003	802	2798	2073	142	319	287
2004	778	2786	2058	163	367	330
2005	754	2775	2042	188	422	380

Table 2-11
District Heating Load Forecast
Scenario 1B

	Bishkek District Heating System			Local District Heating System		
Year	Maximum Demand (Gcal/hr	Heat Generation (Tcal/yr)	District Heat Sales (Tcal/yr)	Maximum Demand (Gcal/hr)	Heat Generation (Tcal/yr)	District Heat Sales (Tcal/yr)
1995	900	2667	2000	46	104	94
1996	935	2800	2100	53	120	108
1997	985	2901	2285	-	-	-
1998	968	2841	2273	-	-	-
1999	941	2675	2230	-	-	-
2000	914	2567	2209	-	-	-
2001	888	2535	2189	-	-	-
2002	861	2515	2168	-	-	-
2003	834	2495	2148	-	-	-
2004	808	2475	2128	-	-	-
2005	782	2455	2108	-	-	-

Table 2-12
District Heating Load Forecast
Scenario 1C

	Bishkek District Heating System			Local District Heating System		
Year	Maximum Demand (Gcal/hr	Heat Generation (Tcal/yr)	District Heat Sales (Tcal/yr)	Maximum Demand (Gcal/hr)	Heat Generation (Tcal/yr)	District Heat Sales (Tcal/yr)
1995	900	2667	2000	46	104	94
1996	935	2800	2100	53	120	108
1997	985	2901	2285	-	-	-
1998	968	2840	2273	-	-	-
1999	951	2703	2253	-	-	-
2000	938	2626	2260	-	-	-
2001	925	2629	2271	-	-	-
2002	914	2645	2287	-	-	-
2003	906	2667	2308	-	-	-
2004	901	2695	2336	-	-	-
2005	899	2730	2372	-	-	-

91

Generating Unit Data

Table 2-13 presents generating unit data for the various production units which provide electricity, district heat, and process steam to the City of Bishkek The table includes the production units from the TES-1 CHP plant, TES-1 HOB plant, and the TES-2 HOB plant Table 2-14 summarizes generating data for the units serving the local district heating systems - i e , the heat only boilers at the JAL and Frunze boiler plants

92

Table 2-13
City of Bishkek
Generating Unit Data
Bishkek Electric, District Heat,
and Process Steam System

		Rated Capacity				
	Production Type	Electric (MW)	Process Steam (Gcal/hr)	District Heat (Gcal/hr)	Scheduled[1] Retirement Year	Fuel Type
TES-1 CHP Plant	Combined Heat and Power					
TG 1	CHP	35	87	35	1999	Coal/Mazut/Natural Gas
TG 2	CHP	25	0	49	1999	Coal/Mazut/Natural Gas
TG 3	CHP	50	100	51	Post 2005	Coal/Mazut/Natural Gas
TG 4	CHP	35	0	97	Post 2005	Coal/Mazut/Natural Gas
TG 5	CHP	35	0	97	Post 2005	Coal/Mazut/Natural Gas
TG 6	CHP	86	0	103		Coal/Mazut/Natural Gas
TG 7	CHP	60	103	61	Post 2005	Coal/Mazut/Natural Gas

(1) End of year

		Rated Capacity				
	Production Type	Electric (MW)	Process Steam (Gcal/hr)	District Heat (Gcal/hr)	Scheduled[1] Retirement Year	Fuel Type
TG 8	CHP	60	103	61	Post 2005	Coal/Mazut/Natural
TG 9	CHP	86	0	103	Post 2005	Coal/Mazut/Natural Gas
TG 10	CHP	86	0	103	Post 2005	Coal/Mazut/Natural Gas
TG 11	CHP	90	0	155	Post 2005	Coal/Mazut/Natural Gas
TES 1 Heat Only Plant	Heat Only Boiler				Post 2005	
Unit 1	HOB	-	-	100	Post 2005	Mazut/Natural Gas
Unit 2	HOB	-	-	100	Post 2005	Mazut/Natural Gas
Unit 3	HOB	-	-	100	Post 2005	Mazut/Natural Gas
TES 2 Heat Only Boiler	District Heat Only				Post 2005	
Unit 1	HOB	-	-	96	2005	Mazut/natural Gas
Unit 2	HOB	-	-	96	Post 2005	Mazut/Natural Gas

[1] TG 1 and TG 2 are the only production units scheduled for retirement before 2005 TG 11 is a new unit which is to be installed in 1998 in the TES-1 CHP plant rehabilitation cases

Table 2-14
City of Bishkek
Local District Heating System
Generating Unit Data

		Rated Capacity				
	Production Type	Electric (MW)	Process Steam (Gcal/hr)	District Heat (Gcal/hr)	Scheduled[1] Retirement Year	Fuel Type
Frunze Plant	District Heat Only					
Unit 1	HOB	0	0	50	2004	Natural Gas
Unit 2	HOB	0	0	50	2004	Natural Gas
Unit 3	HOB	0	0	50	2004	natural Gas
JAL Plant	District Heat Only					
Unit 1	HOB	0	0	20	Post 2005	Natural Gas
Unit 2	HOB	0	0	20	Post 2005	Natural Gas

(1) End of year

2 3 4 Summary of Results

The economic model results associated with the eight study cases analyzed are presented in Appendix II For each study case, modeling results are presented on a series of spreadsheets including the following schedules

- Summary of Costs
- Allocation of Costs
- Partial Tariffs
- Input Data and Assumptions
- Load Forecasts
- Load/Capacity Balances
- Energy Production/Fuel Consumption
- Generating Resource Characteristics
- Investment Schedules

In addition, Appendix III provides detailed spreadsheets illustrating the build-up of investment costs for each study case

The Net Present Value (NPV) of annual costs for the base study cases, Case 1, 2, 3 and 4, are presented in Table 2-15

Table 2-15
Summary of NPV For Base Study Cases

TES-1 CHP Scenario	District Heating System Scenario	
	No Rehabilitation or Integration	**Rehabilitation and Integration**
No Rehabilitation	**Study Case 1** NPV of Costs (1995 to 2014) = $723 8 million	**Study Case 2** NPV of Costs (1995 to 2014) = $714 2 million
Rehabilitation	**Study Case 3** NPV of Costs (1995 to 2014) = $690 9 million	**Study Case 4** NPV of Costs (1995 to 2014) = $682 0 million

As can be seen from this table, the least cost plan is Study Case 4 which includes rehabilitation of both the TES-1 CHP Plant and the Bishkek District Heating System The NPV for Study Case 4 is $682 0 million or $41 8 million less than the "Do Nothing" case, Case 1

The Economic Internal Rate of Return (EIRR) for the base study cases, Cases 1-4 and for the Sensitivity Cases, Cases 1a-4a, are presented in Tables 2-16 and 2-17, respectively As can be seen from these tables, EIRR's are 43 percent for the both of TES-1 CHP rehabilitation only cases, Cases 3 and 3a EIRR's for District Heating Modernization and Rehabilitation only cases, Cases 2 and 2a, are 19 9% and 24 1%, respectively The EIRR's associated with combined

investments in both rehabilitation programs are 30 4% and 32 4% for Cases 4 and 4a, respectively

Figure 2-1 is a plot of total annual revenue requirements (carrying charges and production costs) for the base cases, Cases 1,2,3 and 4 As can be seen from this plot, Case 4 results in the lowest cost plan based on annual revenue requirements and the net present value of costs through 2014

A plot of partial tariffs over the period 1995 to 2005 for Study Case 4 compared to Study Case 1 (i e , the "Do Nothing" Case) is presented in Figure 2-2 As can be seen from this plot, electric tariffs range from 3 06 ¢/kWh to 3 58 ¢/kWh for Case 4 to 3 06 ¢/kWh to 3 96 ¢/kWh for Case 1 District heating tariffs range from 13 79 $/Gcal to 15 35 $/Gcal for Case 4 to 13 79 $/Gcal to 15 71 $/Gcal for Case 1

Based on the analyses performed in this study it is concluded that Study Case 4, i e , rehabilitation, modernization and expansion of the Bishkek District Heating system and implementation of Burns and Roe's Priority 1 recommendation for the TES-1 CHP plant rehabilitation, will result in the least cost plan from among the alternatives examined

A number of factors are found to contribute to the selection of Study Case 4 as the least cost plan, in particular

- Rehabilitation of Bishkek District Heat system piping network results in significant reductions in thermal losses and extends the economic lifetime of the district heating system

- Variable flow operation will reduce power consumption, reduce flow temperatures and facilitate load dispatching

- Automatic regulation, control and monitoring will improve operation and reduce manpower demand

- Substation modernization will facilitate variable flow operation, reduce heat consumption at enduser level and reduce return temperatures, which again will increase electric power production at the CHP plant (10þC lower return temperature will increase power production by 1%)

- Energy meters will facilitate modernization of the tariff structure

- Integration of the Local District Heating System into the Bishkek District Heating System enables some thermal loads which would otherwise be served by heat only boilers, to be served by the more efficient TES-1 CHP plant

- Rehabilitation of Boilers Nos 14 to 20 at the TES-1 CHP plant will reduce fuel consumption as a result of increased boiler efficiency

- Installing TES-1 CHP TG #11 will serve to increase total system electric capability and thereby defer future capacity additions and investment costs

Internal Rate of Return Calculation

Table 2-16

Base Assumption Cases

TES 1 CHP Rehabilitation			1995	1996	1997	1998	1999	2000	2001	2002	2003	2004	2005
With Project (Case 3)	NPV thru 2014												
Investment	15 6	US$M	0 0	0 0	16 6	5 0	0 0	0 0	0 0	0 0	0 9	0 9	0 0
End effect	(7 4)	US$M											(25 8)
O&M	170 1	US$M	14 6	16 2	18 0	18 1	19 7	21 4	21 1	22 9	24 9	27 2	29 4
Energy	512.6	US$M	61.9	64.2	67.2	67.3	67.1	67.9	69.0	70.1	71.1	72.5	74.0
Total	690 9	US$M	76 5	80 4	101 9	90 4	86 8	89 3	90 1	93 0	96 9	100 6	77 6
Without Project (Case 1)													
Investment	12 7	US$M	0 0	0 0	0 0	0 0	0 0	12 6	12 7	0 0	0 9	0 9	0 0
End effect	(6 9)	US$M											(23 8)
O&M	194 5	US$M	14 6	16 2	18 0	20 1	22 4	24 1	26 1	28 1	29 8	32 4	35 3
Energy	523.4	US$M	61.9	64.2	67.2	68.2	69.4	71.4	72.7	71.8	73.0	74.4	75.9
Total	723 8	US$M	76 5	80 4	85 3	88 3	91 8	108 1	111 5	99 9	103 6	107 7	87 4
Net benefit	33 0	US$M	0 0	0 0	(16 6)	(2 2)	5 0	18 8	21 4	6 9	6 7	7 1	9 8
Economic IRR	***43 2%***												

District Heating Modernization and Rehabilitation			1995	1996	1997	1998	1999	2000	2001	2002	2003	2004	2005
With Project (Case 2)	NPV thru 2014												
Investment	32 4	US$M	0 0	2 9	14 8	8 9	3 1	12 6	12 7	0 0	0 0	0 0	0 0
End effect	(7 4)	US$M											(25 6)
O&M	185 3	US$M	14 6	16 1	17 5	19 2	21 1	22 6	24 5	26 5	28 1	30 5	33 3
Energy	503.8	US$M	61.9	64.2	65.8	66.1	66.0	67.3	68.5	68.0	69.1	70.5	72.0
Total	714 2	US$M	76 5	83 2	98 0	94 2	90 3	102 5	105 7	94 4	97 2	101 1	79 7
Without Project (Case 1)													
Investment	12 7	US$M	0 0	0 0	0 0	0 0	0 0	12 6	12 7	0 0	0 9	0 9	0 0
End effect	(6 9)	US$M											(23 8)
O&M	194 5	US$M	14 6	16 2	18 0	20 1	22 4	24 1	26 1	28 1	29 8	32 4	35 3
Energy	523.4	US$M	61.9	64.2	67.2	68.2	69.4	71.4	72.7	71.8	73.0	74.4	75.9
Total	723 8	US$M	76 5	80 4	85 3	88 3	91 8	108 1	111 5	99 9	103 6	107 7	87 4
Net benefit	9 7	US$M	0 0	(2 8)	(12 8)	(5 9)	1 6	5 6	5 8	5 5	6 4	6 7	7 7
Economic IRR	***19 9%***												

TES 1 CHP and District Heating Modernization/Rehabilitation			1995	1996	1997	1998	1999	2000	2001	2002	2003	2004	2005
With Project (Case 4)	NPV thru 2014												
Investment	35 3	US$M	0 0	2 9	31 4	14 0	3 1	0 0	0 0	0 0	0 0	0 0	0 0
End effect	(7 9)	US$M											(27 6)
O&M	160 9	US$M	14 6	16 1	17 5	17 2	18 4	20 0	19 6	21 3	23 2	25 3	27 3
Energy	493.7	US$M	61.9	64.2	65.8	65.2	63.9	64.2	65.2	66.3	67.3	68.7	70.1
Total	682 0	US$M	76 5	83 2	114 6	96 4	85 5	84 1	84 7	87 6	90 5	94 0	69 9
Without Project (Case 1)													
Investment	12 7	US$M	0 0	0 0	0 0	0 0	0 0	12 6	12 7	0 0	0 9	0 9	0 0
End effect	(6 9)	US$M											(23 8)
O&M	194 5	US$M	14 6	16 2	18 0	20 1	22 4	24 1	26 1	28 1	29 8	32 4	35 3
Energy	523.4	US$M	61.9	64.2	67.2	68.2	69.4	71.4	72.7	71.8	73.0	74.4	75.9
Total	723 8	US$M	76 5	80 4	85 3	88 3	91 8	108 1	111 5	99 9	103 6	107 7	87 4
Net benefit	41 9	US$M	0 0	(2 8)	(29 3)	(8 1)	6 3	24 0	26 8	12 3	13 1	13 8	17 5
Economic IRR	***30 4%***												

Table 2-17

Sensitivity Cases DH System Expansion

TES 1 CHP Rehabilitation			1995	1996	1997	1998	1999	2000	2001	2002	2003	2004	2005
With Project (Case 3a)	NPV thru 2014												
Investment	21 2	US$M	0 0	0 0	16 6	5 0	0 0	7 2	0 8	0 8	2 6	2 7	0 0
End effect	(7 2)	US$M											(25 0)
O&M	171 6	US$M	14 6	16 2	18 0	18 1	19 8	21 5	21 3	23 2	25 2	27 6	29 9
Energy	521.0	US$M	61.9	64.2	67.2	67.3	67.3	68.5	69.9	71.5	73.0	74.9	77.0
Total	706 5	US$M	76 5	80 4	101 9	90 4	87 1	97 2	92 0	95 5	100 8	105 2	81 9
Without Project (Case 1a)													
Investment	18 3	US$M	0 0	0 0	0 0	0 0	0 0	19 8	13 5	0 8	2 6	2 7	0 0
End effect	(6 6)	US$M											(23 1)
O&M	196 0	US$M	14 6	16 2	18 0	20 1	22 5	24 2	26 3	28 3	30 1	32 8	35 8
Energy	531.8	US$M	61.9	64.2	67.2	68.2	69.6	72.0	73.6	73.1	74.8	76.8	78.9
Total	739 5	US$M	76 5	80 4	85 3	88 3	92 1	116 0	113 4	102 3	107 5	112 3	91 7
Net benefit	32 9	US$M	0 0	0 0	(16 6)	(2 2)	5 0	18 8	21 4	6 9	6 7	7 1	9 8
Economic IRR	*43 2%*												

District Heating Modernization and Rehabilitation			1995	1996	1997	1998	1999	2000	2001	2002	2003	2004	2005
With Project (Case 2a)	NPV thru 2014												
Investment	36 1	US$M	0 0	2 9	14 8	8 9	3 1	19 8	12 7	0 0	0 0	0 0	0 0
End effect	(7 2)	US$M											(25 0)
O&M	185 4	US$M	14 6	16 1	17 5	19 2	21 1	22 6	24 5	26 5	28 1	30 6	33 3
Energy	508.7	US$M	61.9	64.2	65.8	66.1	66.2	67.8	69.2	68.8	70.2	71.9	73.7
Total	723 0	US$M	76 5	83 2	98 0	94 2	90 5	110 2	106 4	95 3	98 3	102 4	82 0
Without Project (Case 1a)													
Investment	18 3	US$M	0 0	0 0	0 0	0 0	0 0	19 8	13 5	0 8	2 6	2 7	0 0
End effect	(6 6)	US$M											(23 1)
O&M	196 0	US$M	14 6	16 2	18 0	20 1	22 5	24 2	26 3	28 3	30 1	32 8	35 8
Energy	531.8	US$M	61.9	64.2	67.2	68.2	69.6	72.0	73.6	73.1	74.8	76.8	78.9
Total	739 5	US$M	76 5	80 4	85 3	88 3	92 1	116 0	113 4	102 3	107 5	112 3	91 7
Net benefit	16 5	US$M	0 0	(2 8)	(12 8)	(5 9)	1 6	5 8	7 0	7 1	9 3	9 9	9 8
Economic IRR	*24 1%*												

TES 1 CHP and District Heating Modernization/Rehabilitation			1995	1996	1997	1998	1999	2000	2001	2002	2003	2004	2005
With Project (Case 4a)	NPV thru 2014												
Investment	38 9	US$M	0 0	2 9	31 4	14 0	3 1	7 2	0 0	0 0	0 0	0 0	0 0
End effect	(7 8)	US$M											(27 0)
O&M	161 0	US$M	14 6	16 1	17 5	17 2	18 4	20 0	19 6	21 3	23 2	25 3	27 4
Energy	498.4	US$M	61.9	64.2	65.8	65.2	64.1	64.5	65.8	67.1	68.4	70.0	71.8
Total	690 6	US$M	76 5	83 2	114 6	96 4	85 7	91 7	85 4	88 4	91 6	95 3	72 1
Without Project (Case 1a)													
Investment	18 3	US$M	0 0	0 0	0 0	0 0	0 0	19 8	13 5	0 8	2 6	2 7	0 0
End effect	(6 6)	US$M											(23 1)
O&M	196 0	US$M	14 6	16 2	18 0	20 1	22 5	24 2	26 3	28 3	30 1	32 8	35 8
Energy	531.8	US$M	61.9	64.2	67.2	68.2	69.6	72.0	73.6	73.1	74.8	76.8	78.9
Total	739 5	US$M	76 5	80 4	85 3	88 3	92 1	116 0	113 4	102 3	107 5	112 3	91 7
Net benefit	48 9	US$M	(0 0)	(2 8)	(29 3)	(8 1)	6 4	24 3	28 1	13 9	16 0	17 0	19 6
Economic IRR	*32 4%*												

Figure 2-1

Comparative Revenue Requirements
Study Cases 1, 2, 3 and 4

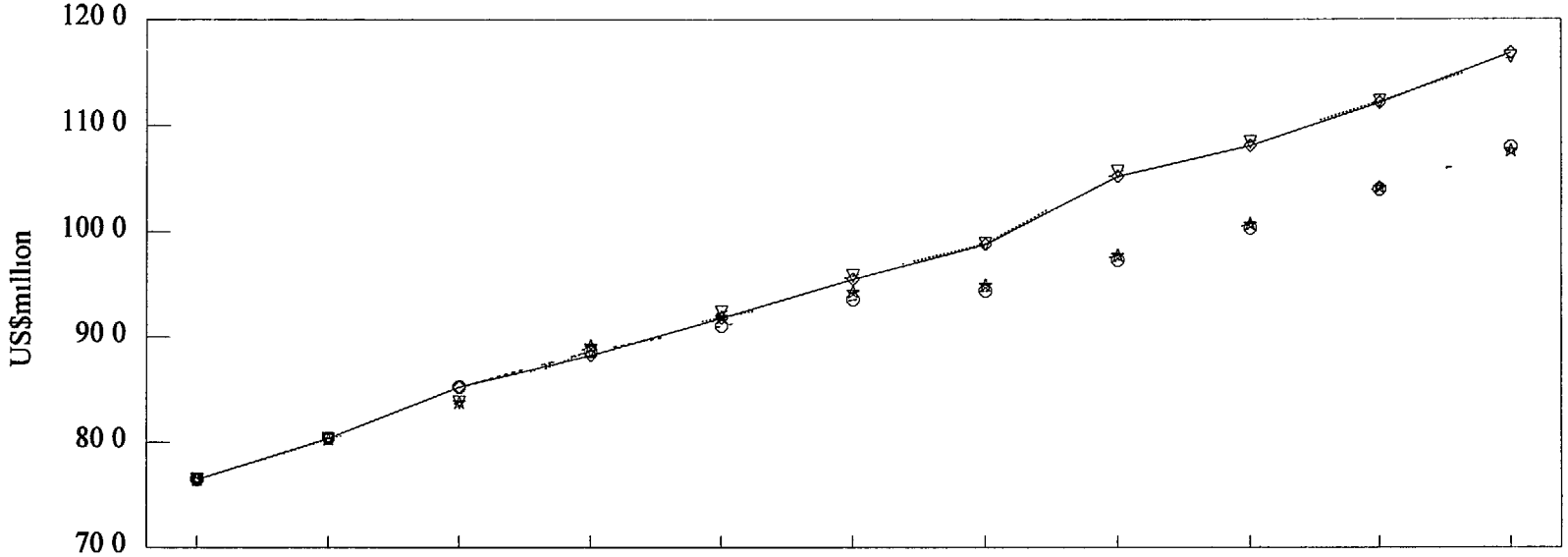

Study Year	1995	1996	1997	1998	1999	2000	2001	2002	2003	2004	2005
◇ Case 1	76 5	80 4	85 3	88 3	91 8	95 5	98 8	105 2	108 1	112 1	116 8
▽ Case 2	76 5	80 3	83 8	88 8	92 4	95 8	98 8	105 6	108 4	112 3	116 4
○ Case 3	76 5	80 4	85 3	88 7	91 1	93 6	94 4	97 3	100 3	104 0	107 9
☆ Case 4	76 5	80 3	83 8	89 2	91 9	94 3	94 9	97 8	100 7	104 1	107 6

* All revenues are in constant 1995 dollars

		Case 1		Case 2		Case 3		Case 4	
NPV of Costs		thru 2005	thru 2014	thru 2005	thru 2014	thru 2005	thru 2014	thru 2005	thru 2014
Primary energy expense	US$million	407 1	523 4	393 6	503 8	399 3	512 6	386 3	493 7
O&M expense	US$million	131 1	194 5	125.2	185.3	117.4	170.1	111 7	160.9
Subtotal, production costs	US$million	538 2	717 9	518 8	689 1	516 6	682 7	497 9	654 6
Investments	US$million	12.7	12.7	32.4	32.4	15.6	15 6	35.3	35 3
Total, Annual Costs	US$million	550 9	730 7	551 2	721 5	532 2	698 3	533 2	689 9
End-effect Adjustment	US$million	(6.9)	(6 9)	(7.4)	(7.4)	(7.4)	(7 4)	(7 9)	(7.9)
Total, all costs	US$million	544 1	723 8	543 9	714 2	524 8	690 9	525 3	682 0

Figure 2-2

Partial Tariff* Projections for Study Cases 1 and 4

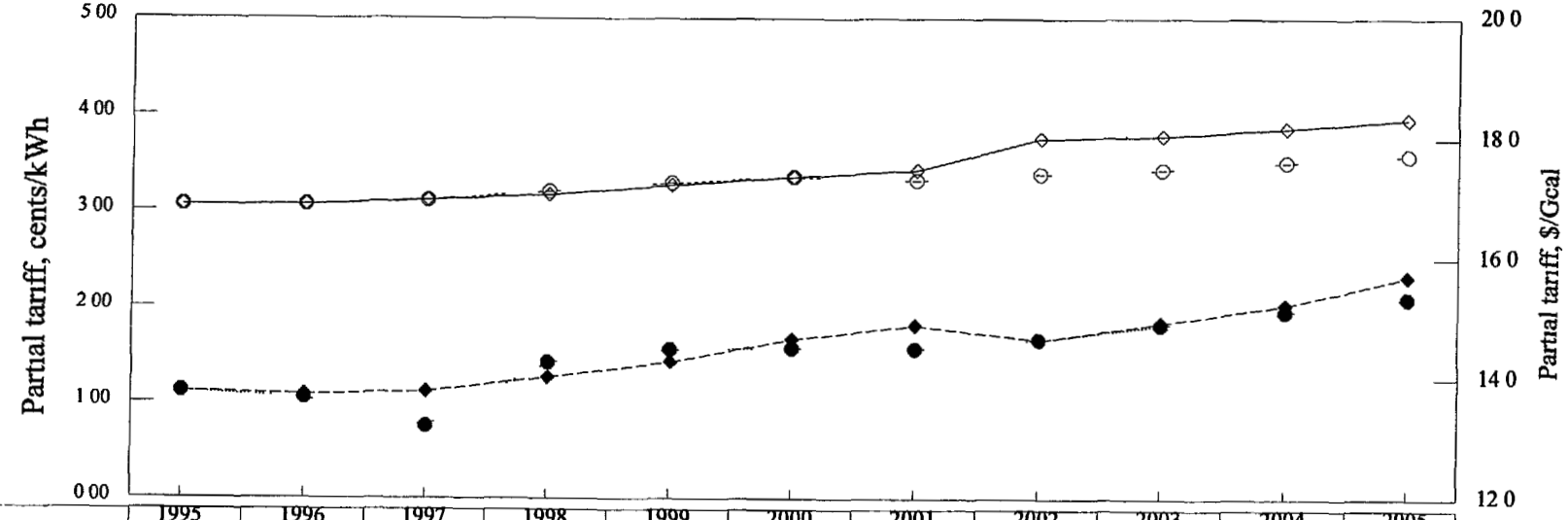

Account	1995	1996	1997	1998	1999	2000	2001	2002	2003	2004	2005
◇ Case 1 - Electric	3 06	3 07	3 11	3 17	3 27	3 35	3 43	3 76	3 78	3 87	3 96
◆ Case 1 - Heating	13 79	13 73	13 78	14 03	14 29	14 67	14 89	14 65	14 94	15 24	15 71
⊖ Case 4 - Electric	3 06	3 07	3 11	3 21	3 29	3 36	3 32	3 39	3 43	3 51	3 58
● Case 4 Heating	13 79	13 69	13 21	14 28	14 49	14 51	14 50	14 66	14 90	15 12	15 35

* All tariffs are in constant 1995 dollars

2 4 EVALUATION OF DECENTRALIZED ALTERNATIVES TO DISTRICT HEATING

Kyrgyzstan has a singificant reserve of indigenous coal (approximately 2 billion tons) in the southern and central parts of the country However due to mountaineous terrain, coal must be transported through Uzbekistan and Kazakstan to be brought to the Bishkek Thermal Electric Station No 1 (TES 1) The coal transportation costs and excise duties imposed by neighboring countries are very high Kyrgyzstan does not have significant natural gas or oil (mazut) reserves, and it needs to import them from Uzbekistan, Turkmenistan, Kazakstan, and Russia However, Kyrgyzstan has a high potential for hydropower development, and 82% of its present electric power is supplied by hydroelectric power plants Because of the large unexploited energy resources in the form of low cost hydroelectric potential, and because of the deterioration of the existing hot water district heating system and the aging Bishkek TES 1, the government of Kyrgyzstan, the U S Agency for International Development (USAID), and the World Bank asked Burns and Roe to evaluate the alternatives to provide electric and heat supplies to the population of the city of Bishkek This section explores two alternatives that could be used to replace the aging TES 1 as a heat source and district heating system in the city of Bishkek Other alternatives which replaces TES-1 as the heat source are described in Appendix IV

Burns and Roe jointly with AEP Energy Services, has studied the two major sources of alternative heating systems, namely the decentralized electric and decentralized gas heating systems In the electric heating system, heat and hot water will be provided by decentralized electrical resistance space heaters and electric water heaters In addition, under the electric heating system the existing electric power supply and electric distribution systems will be strengthened to provide electricity to the electric resistance heaters in the buildings In the gas heating option, gas boilers will be located at the individual apartment buildings These boilers will provide both space heating and domestic hot water for the city buildings New natural gas lines will need to be constructed and some of the existing gas lines will need to be upgraded to provide the natural gas to these locally fired gas boilers

2 4 1 Decentralized Electric Resistance Heating

This option uses electric resistance type heating With this method, each living space (apartment) would have resistance type base-board heaters Domestic hot water will be provided by individual electric hot water heaters in each apartment The current hot water based district heating system would be retired Table 2-18 presents budgetary cost estimates for the electric resistance heating option based on a conceptual assessment of electrical transmission and distribution system improvements needed, including rewiring residential apartment buildings

TABLE 2-18
Electric Resistance Heating Option Cost Data

District Number	*Estimated Number of Buildings per District*	*Cost of Heating Elements and Associated Wiring, Thousand USD*
No 1	275	$12,285
No 2	231	$10,320
No 3	300	$13,400
No 4	186	$8,310
No 6	186	$8,310
No 7	504	$22,515
No 8	735	$32,835
No 9	538	$24,035
No 11	345	$15,415
New 500 kV Transmission Lines (4 Lines, 476 km Total Length), 500/220 kV Transformers (3), and 220-110 kV Reinforcements		$225,000
New 6 & 10 kV Distribution Lines		$43,000
	TOTAL	**$415,425**

The costs per district shown in Table 2-18 were derived using the following data To accommodate the increased electrical demand associated with heating and hotwater appliances, the electric service to each apartment complex must be upgraded, and individual circuit risers must be provided to each apartment A typical apartment building consists of 54 units, which are comprised of one, two, and three room apartments In addition, each building has nine floors and an average apartment unit has approximately 59 2 square meters of living space Table 2-19 shows relevant information needed to estimate the electric power requirements for an average apartment building Based upon the coldest day heating requirements, it is estimated that each apartment building will require an additional electric demand of approximately 549 kW to provide for electric space heating and domestic hot water heating requirements The cost estimates given in Table 2-18 are based on the information in Table 2-19 In addition, Table 2-19 shows the power requirements for hot water heating are greater than the space heating power This is typical for large apartment buildings

TABLE 2-19
Electrical Resistance Heating Information

Apartment Size	*Quantity in Building*	*Total Square meters*	*Number of Inhabitant*	*Power for Space Heating, kW*	*Power for Hot Water Heating, kW*	*Total Power, kW*
One room	9	309	18	21 5	23 3	44 8
Two Room	18	956	59	67 5	77 9	145 4
Three Room	27	1932	135	134 3	179 1	313 4
Entrances (Doorways)	2	657	N/A	45 4	N/A	45 4
			TOTALS	**268 7**	**280 3**	**549 0**

To meet the increased electrical demand, it is necessary to install an additional 630 kVA, 6kV/0 4kV transformer at each apartment building The transformer will be electrically connected to the existing utility system The cost for connecting this new distribution transformer, including the cost of high voltage circuit attachments is estimated to be $5000 per building

The existing apartment complex low voltage wiring does not have sufficient capacity to handle electrical resistance heating and hotwater heating requirements Therefore, a new low voltage, 220/380 volt bus will be installed for each new 630 kVA transformer at each apartment building The estimated cost is $2400 per transformer This bus could be connected and metered at the low voltage side of the distribution transformer The cost of the total electrical heating load for each building could be split among the tenants for billing purposes Each apartment unit would be connected electrically through a number of new (220/380 volt) service conductor circuits separately wired from the low voltage bus An estimated wiring cost per building, assuming 54 units, six units per floor is $11,625 per building

Each apartment would require two heating elements with a cost of approximately $225 per apartment unit In addition, a domestic hot water heater will be needed for each apartment This will cost approximately $250 per apartment unit Thus, the estimated total cost of electrical resistance heating and hot water heaters will be approximately $25,650 per building

From the above mentioned cost estimates, the total cost to provide for electrical resistance space heating and hot water heating will be approximately $44,675 per building This system will

establish a separate low voltage energy system wired separately from the existing building electrical system to serve only the heating requirements of each building

2 4.2 Decentralized Gas Heatings

In this variant, gas fired hot water boilers will be placed at each apartment building These boilers will provide both domestic hot water and space heating for all the apartments in the building In the current heating system, hot water radiators are used to provide space heating Under this variant these radiators will be kept, along with some of its associated piping The cost estimates are shown in Table 2-20

TABLE 2-20

Decentralized Gas Boiler Cost Data

(Boilers Located at Apartment Buildings)

District Number	*Estimated Number of Buildings Per District*	*Cost of Boilers and Associated Equipment Thousand USD*
No 1	275	$9,075
No 2	231	$7,623
No 3	300	$9,900
No 4	186	$6,138
No 6	186	$6,138
No 7	504	$16,632
No 8	735	$24,255
No 9	538	$17,754
No 11	345	$11,385
Upgrade and Installation of Gas Transmission Piping		$5,122
Rehabilitation of Main Gas Transmission Line		$20,000
Installation of Gas Distribution Piping (including gas mains and flow meters)		$25,000
TOTALS		**$159,022**

Kyrgyzstan has received natural gas since 1968, through a gas pipeline network originating in Turkmenistan and Uzbekistan and terminating in Kazakstan Until 1993, gas was mostly supplied by Turkmenistan (and transiting in Uzbekistan), since then, Uzbekistan has taken over the supplies (and, reportedly, the interconnection to Turkmenistan has been removed)

There are two distinct markets for gas with separate supply lines The northern sector is supplied by the main Gazli-Bukhara-Tashkent-Bishkek-Almaty trunkline, while the southern sector is only linked to the Uzbek system in the Fergana Valley There are about 3,000 km of distribution pipelines supplying 200 industrial consumers and over 300,000 households

The costs shown in Table 2-20 were derived using the following data Table 2-19 shows that each apartment building needs approximately 270 kW power for space heating and 280 kW of power for hot water heating Thus, each building will have two hot water gas fired boilers that will serve both the space heating and hot water needs of the buildings In addition, during the summer months one of the boilers could be shut-down because only domestic hotwater will be needed The cost of these boilers and associated gas piping is estimated at $17,000 per building

When the new boilers are installed, the associated water piping system will also need to be upgraded The radiators currently being used in the apartments will continue to be used in the same manner, the radiators will need to be disconnected from the current heating system and connected to the new boilers This new system will be a closed loop system, with the hot water traveling from the gas boilers to the radiators in the building and then back to the boilers Thus, circulating pumps will be needed to pump the hot water throughout the building The cost of upgrading the water piping and installing new pumps is $16,000 per building Therefore, the total cost per building is estimated at $33,000

The costs of upgrading and installing the natural gas pipelines must also be included in the total costs For more information on the current use of natural gas in Bishkek see Appendix IV This cost is broken down in the transmission piping and the distribution piping Upgrading of the current natural gas transmission lines will cost $5,122,000 In addition, an additional $20,000,000 will be needed to upgrade the large natural gas transmission line that runs from Uzbekistan to Almaty This cost is only to rehabilitate the section from Uzbekistan to the point where the City of Bishkek taps into the line Another component of the piping costs will come from the distribution piping This work will require tapping into the main transmission line and running pipe to the individual buildings This is a very labor intensive process Gas mains and flowmeters will also be installed The total cost of distribution piping installation is estimated at $25,000,000

2 4 3 Summary of Decentralized Heating Options

The table below shows the capital costs associated with the two decentralized heating options

TABLE 2-21

Decentralized Heating Option

OPTION	COST, USD
RESISTANCE HEATING	$415,425,000
APARTMENT GAS BOILERS	$159,022,000

The table shows that both these options require very large capital expenditures The large cost of the resistance heating is derived mainly from the bulk power transmission and low voltage distribution upgrade requirements

Tables 2-22 to 2-24 show the life cycle cost associated with these two decentralized heating options The life cycle cost is the capital cost plus the present value of all the annual costs of the systems over a certain time span This cost represents the amount of money needed today to pay for the system over the specified time period In this analysis, the time period is from 1996 to 2014

The tables show that the life cycle costs for both these options are very large Therefore, when the above options are compared to the recommended District Heating Rehabilitation Net Present Cost (NPC/Life Cycle Cost), it is clear that the decentralized options are not economical

DISTRICT HEATING NPC COMPARISON

Scenario	Cost US$
BDHE - Life Cycle Cost (1995-2014)*	$194,080,000
Decentralized Electrical Resistance Heat (1995-2014) Life Cycle Cost	$1,041,000,000
Decentralized Gas Heat (1995-2014) Life Cycle Cost	$383,000,000

*Recommended District Heating Rehabilitation Case

In addition, the figure for the electrical resistance heating option does not include the cost of new electrical generation which will be required to supply power to make this option workable

Table 2-22

Resistance Heating.	Efficiency =	99 00%
	Capital Costs =	$415,425,000
	Discount Rate =	12 00%

Year	Year Number	DH System Heat Output, TJ	DH System Heat Input, TJ	Power Costs, $USD/kWh	Total Fuel Costs, $USD	O & M Costs*, $USD	Total Annual Costs, $USD	PV of Annual Costs, $USD
1996	1	8793	8882	$0 030	$74,015,152	$8,308,500	$82,323,652	$73,503,260
1997	2	8990	9081	$0 030	$75,673,401	$8,391,585	$84,064,986	$67,016,092
1998	3	9515	9611	$0 030	$80,092,593	$8,475,501	$88,568,093	$63,041,019
1999	4	9335	9429	$0 030	$78,577,441	$8,560,256	$87,137,697	$55,377,582
2000	5	9248	9341	$0 030	$77,845,118	$8,645,858	$86,490,976	$49,077,303
2001	6	9162	9255	$0 030	$77,121,212	$8,732,317	$85,853,529	$43,496,070
2002	7	9077	9169	$0 030	$76,405,724	$8,819,640	$85,225,364	$38,551,627
2003	8	8993	9084	$0 030	$75,698,653	$8,907,837	$84,606,490	$34,171,142
2004	9	8910	9000	$0 030	$75,000,000	$8,996,915	$83,996,915	$30,290,130
2005	10	8828	8917	$0 030	$74,309,764	$9,086,884	$83,396,648	$26,851,489
2006	11	8828	8917	$0 030	$74,309,764	$9,177,753	$83,487,517	$24,000,666
2007	12	8828	8917	$0 030	$74,309,764	$9,269,530	$83,579,295	$21,452,723
2008	13	8828	8917	$0 030	$74,309,764	$9,362,226	$83,671,990	$19,175,461
2009	14	8828	8917	$0 030	$74,309,764	$9,455,848	$83,765,612	$17,140,104
2010	15	8828	8917	$0 030	$74,309,764	$9,550,407	$83,860,171	$15,320,940
2011	16	8828	8917	$0 030	$74,309,764	$9,645,911	$83,955,675	$13,694,989
2012	17	8828	8917	$0 030	$74,309,764	$9,742,370	$84,052,134	$12,241,718
2013	18	8828	8917	$0 030	$74,309,764	$9,839,793	$84,149,558	$10,942,774
2014	19	8828	8917	$0 030	$74,309,764	$9,938,191	$84,247,956	$9,781,759
							TOTAL	$625,126,846

* The 1996 O & M cost is 2% of the Capital Costs, and then increases 1% annually

Life Cycle Cost = (CAPITAL COSTS +TOTAL PV OF ANNUAL COSTS) = ***$1,040,551,846***

108

Table 2-23

Gas Boilers (At Apt. Bldgs.)		
	Efficiency* =	75 00%
	Capital Costs =	$159,022,000
	Discount Rate =	12 00%

Year	Year Number	DH System Heat Output, TJ	DH System Heat Input, TJ	Fuel Costs $USD/Gcal	Total Fuel Costs, $USD	O & M Costs, $USD**	Total Annual Costs, $USD	PV of Annual Costs, $USD
1996	1	8793	11724	$9 40	$26,322,057	$3,180,440	$29,502,497	$26,341,515
1997	2	8990	11987	$9 40	$26,911,781	$3,212,244	$30,124,025	$24,014,688
1998	3	9515	12687	$9 40	$28,483,381	$3,244,367	$31,727,748	$22,583,184
1999	4	9335	12447	$9 40	$27,944,547	$3,276,811	$31,221,357	$19,841,737
2000	5	9248	12331	$9 40	$27,684,110	$3,309,579	$30,993,689	$17,586,651
2001	6	9162	12216	$9 40	$27,426,667	$3,342,674	$30,769,341	$15,588,706
2002	7	9077	12103	$9 40	$27,172,217	$3,376,101	$30,548,318	$13,818,508
2003	8	8993	11991	$9 40	$26,920,761	$3,409,862	$30,330,623	$12,250,030
2004	9	8910	11880	$9 40	$26,672,299	$3,443,961	$30,116,260	$10,860,225
2005	10	8828	11771	$9 40	$26,426,830	$3,478,400	$29,905,230	$9,628,684
2006	11	8828	11771	$9 40	$26,426,830	$3,513,184	$29,940,014	$8,607,039
2007	12	8828	11771	$9 40	$26,426,830	$3,548,316	$29,975,146	$7,693,873
2008	13	8828	11771	$9 40	$26,426,830	$3,583,799	$30,010,629	$6,877,662
2009	14	8828	11771	$9 40	$26,426,830	$3,619,637	$30,046,467	$6,148,103
2010	15	8828	11771	$9 40	$26,426,830	$3,655,834	$30,082,664	$5,495,990
2011	16	8828	11771	$9 40	$26,426,830	$3,692,392	$30,119,222	$4,913,098
2012	17	8828	11771	$9 40	$26,426,830	$3,729,316	$30,156,146	$4,392,072
2013	18	8828	11771	$9 40	$26,426,830	$3,766,609	$30,193,439	$3,926,342
2014	19	8828	11771	$9 40	$26,426,830	$3,804,275	$30,231,105	$3,510,036
							TOTAL	$224,078,143

* This is an overall efficiency, which includes the boiler efficiency and the heat losses in the piping systems
** The 1996 O & M cost is 2% of the Capital Costs, and then increases 1% annually

Life Cycle Cost = (CAPITAL COSTS +TOTAL PV OF ANNUAL COSTS) = ***$383,100,143***

Table 2-24

District Heating System Cost Allocation

Calendar Year		1995	1996	1997	1998	1999	2000	2001	2002	2003	2004	2005
Fuel Expenses												
Methodology #1 Shared Benefit												
Bishkek TES 1 CHP fuel	$000	20 374	20 900	21 533	21 437	20 862	20 582	20 446	20 204	20 299	20 233	20,154
Bishkek TES 1 and TES 2 HOBs fuel	$000	1 942	2 251	2 526	2 106	1 185	829	715	152	80	43	21
Local DH system HOBs fuel	$000	1 178	1 359	0	0	0	0	0	0	0	0	0
Grid electric for pumping power	$000	0	0	1	1	1	5	6	1	1	1	2
GTCC fuel for pumping power	$000	0	0	0	0	0	0	0	0	0	0	0
Bishkek TES 1 CHP fuel for pumping power	$000	524	541	389	379	360	349	346	343	340	339	338
Total primary energy	$000	24 017	25 052	24 448	23 922	22 408	21 765	21,513	20 699	20 720	20,617	20 516
Methodology #2 Cogen Benefit to DH												
Bishkek TES 1 CHP fuel	$000	15 117	15 545	16 052	16 065	15 711	15 905	15 850	15 027	15 351	15 388	15 414
Bishkek TES 1 and TES 2 HOBs fuel	$000	1 942	2 251	2 526	2 106	1 185	829	715	152	80	43	21
Local DH system HOBs fuel	$000	1 178	1 359	0	0	0	0	0	0	0	0	0
Grid electric for pumping power	$000	0	0	1	1	1	5	6	1	1	1	2
GTCC fuel for pumping power	$000	0	0	0	0	0	0	0	0	0	0	0
Bishkek TES 1 CHP fuel for pumping power	$000	439	453	324	317	305	301	301	295	294	296	297
Total primary energy	$000	18 676	19 609	18 901	18 489	17 202	17 041	16 872	15 474	15 727	15 728	15 734
O&M Expenses												
Bishkek TES 1 CHP Plant	$000	1 375	1 543	1 738	1 966	2 233	2 405	2 636	2 889	3 081	3 381	3 716
Bishkek TES 1 and TES 2 HOBs	$000	304	358	409	346	198	141	123	26	14	8	4
District heating distribution system	$000	3 000	3 049	3 006	2 915	2 805	2 939	2 981	3 022	3 062	3,101	3,139
Local DH system HOBs	$000	184	216	0	0	0	0	0	0	0	0	0
Total O&M	$000	4 863	5 165	5 152	5 227	5 236	5 485	5 740	5 937	6 157	6 490	6 859
Investments in DH System Rehabilitation	$000	0	2 898	14 786	8 913	3 150	0	0	0	0	0	0

Summary of All Costs for DH Service

Calendar Year			1995	1996	1997	1998	1999	2000	2001	2002	2003	2004	2005
Shared Benefit	NPV thru 2014												
Fuel/Primary Energy Expense	167 286	$000	24 017	25 052	24 448	23 922	22 408	21 765	21 513	20 699	20 720	20 617	20 516
O&M Expenses	44 648	$000	4 863	5 165	5 152	5 227	5 236	5 485	5 740	5 937	6 157	6 490	6 859
Investment Expenses	20,286	$000	0	2,898	14,786	8,913	3,150	0	0	0	0	0	0
Total	232 220	$000	28 880	33 115	44 387	38 062	30 793	27 250	27 253	26 637	26 877	27 107	27 374
Cogeneration Benefit to DH	NPV thru 2014												
Fuel/Primary Energy Expense	129 146	$000	18 676	19 609	18 901	18 489	17 202	17 041	16 872	15 474	15 727	15 728	15 734
O&M Expenses	44 648	$000	4 863	5 165	5 152	5 227	5 236	5 485	5 740	5 937	6 157	6 490	6 859
Investment Expenses	20,286	$000	0	2,898	14,786	8,913	3,150	0	0	0	0	0	0
Total	194 080	$000	23 539	27 672	38 840	32 628	25 587	22 526	22 611	21 411	21 884	22 219	22 593

Table 2-24 (Cont'd)

2006	2007	2008	2009	2010	2011	2012	2013	2014
20 154	20 154	20 154	20 154	20 154	20 154	20 154	20 154	20 154
21	21	21	21	21	21	21	21	21
0	0	0	0	0	0	0	0	0
2	2	2	2	2	2	2	2	2
0	0	0	0	0	0	0	0	0
338	338	338	338	338	338	338	338	338
20 516	20 516	20 516	20 516	20 516	20,516	20 516	20 516	20 516
15 414	15 414	15 414	15 414	15 414	15 414	15 414	15 414	15 414
21	21	21	21	21	21	21	21	21
0	0	0	0	0	0	0	0	0
2	2	2	2	2	2	2	2	2
0	0	0	0	0	0	0	0	0
297	297	297	297	297	297	297	297	297
15 734	15 734	15 734	15 734	15 734	15 734	15 734	15 734	15 734
3 854	4 001	4 157	4 322	4 497	4 682	4 879	5 088	5 309
4	4	4	4	4	4	4	4	4
3 223	3 311	3 404	3 502	3 605	3 713	3 828	3 949	4 077
0	0	0	0	0	0	0	0	0
7 081	7 316	7 565	7 828	8 106	8,400	8 711	9 041	9 390
0	0	0	0	0	0	0	0	0

2006	2007	2008	2009	2010	2011	2012	2013	2014
20 516	20 516	20 516	20 516	20 516	20 516	20 516	20 516	20 516
7 081	7 316	7 565	7 828	8 106	8 400	8 711	9 041	9 390
0	0	0	0	0	0	0	0	0
27 597	27 832	28 081	28 343	28 621	28 916	29 227	29 557	29 906
15 734	15 734	15 734	15 734	15 734	15 734	15 734	15 734	15 734
7 081	7 316	7 565	7 828	8 106	8 400	8 711	9 041	9 390
0	0	0	0	0	0	0	0	0
22 815	23 050	23 299	23 562	23 840	24 134	24 445	24 775	25 124

2 5 ENVIRONMENTAL ASSESSMENT FOR TES, BDHE AND ET&D

An environmental screening has determined that this project should be classified as a Category B in terms of its environmental impact While Catagory B projects may have some adverse impacts on the environment, these are usually not significant and they are in most cases completely reversible Remedial measures addressing these impacts are easily incorporated into a project mitigation plan

This section of the report includes

- Description of Impacts Associated with Continued Operation of the Facility
- Potential Impacts Anticipated During Implementation of the Project
- Potential Impacts Resulting from the Operation of the Rehabilitated Facility
- Description of Potential Mitigation Measures
- Recommendations for Future Investment Considerations
- Each subject includes the anticipated impact on air quality, surface and groundwater quality and other associated enviromental impacts

2 5 1 Impacts from Continued Operation of the Existing Facility

This section identifies environmental impacts which are occurring as a result of the current operating conditions of TES-1, the District Heating, and Transmission and Distribution Systems and which can reasonably be expected to continue to exist with or without the proposed refurbishment project

Background

TES-1, a Combined Heat and Power Plant, is the larger of two power and district heating plants in Bishkek and is located in the northeast section of the city The plant consists of twenty four (24) high pressure steam boilers and ten (10) steam turbine-generators All boilers are coal fired using coal from two sources, Kazakstan mines and indigenous Kyrgyz mines Natural gas is also fired when it can be obtained, and Mazut is used for start-up of the boilers In recent years the quality of the coals burned has dropped significantly This lower quality coal has an ash content as high as 40 to 45%, and results in poor boiler performance as well as an increase in air pollution

Design steam output for 13 of the 24 boilers is 160 tons per hour but these boilers are currently producing approximately 145 tons per hour The remaining 11 boilers have a design output of 220 tons per hour and are currently producing approximately 190 tons per hour This reduced output is primarily due to the poor quality coal being burned Continued operation of the plant using the current grade of coal will result in the ongoing increased accumulation of ash and increased air pollutant emissions, in order to meet demand for heat and electricity Quantitative data comparing the effects of coal quality was not available at the time this plan was prepared

Impact on Air Quality

Current air pollution control equipment is capable of removing a portion of the fly ash from the flue gas The 13 smaller boilers are each equipped with venturi scrubbing systems with an average particulate collection efficiency of 95 to 96% The 11 larger boilers are equipped with electrostatic precipitators with an average particulate collection efficiency of 96 to 97% Injection of alkali into the flue gas is reported to reduce SO_2 emissions by an estimated 20% and NO_x emissions by an estimated 15% over an uncontrolled emission level The Bishkek Plant presently does not have any equipment for measuring SO_2, NO_x, or CO emissions and therefore emissions are calculated based on the composition of coal burned

The original plant design utilized three separate stacks for flue gas dispersion, two (2) 180-meter high stacks and one (1) 150-meter high stack A new, 300-meter high stack has been constructed to improve flue gas dispersion Of the 24 boilers, 9 have been connected to the new stack

Air dispersion screening modeling was performed to estimate the impact on ground level concentrations of pollutants emitted from the plant The model used was the ISCST2, a steady-state Gaussian plume model that can be used to assess pollutant concentrations from a variety of sources associated with an industrial source complex One of three scenarios for which the model was run is the current configuration of boilers and stack ducting For the purpose of predicting worst-case conditions, all boilers are assumed to be under full load and in continuous operation The stack parameters, flue gas data, and pollutant emissions are given in Table 2-25 In general the area within a radius of 15 km of TES-1, is classified as simple terrain only

The screening air modeling results indicate that the stack emissions from TES-1 under the current operating conditions have the potential for impact on ground level concentrations which exceed the 1995 World Bank Guidelines 24-hour average for SO_2 The highest ground level pollutant concentrations or impacts were predicted to occur approximately 900 to 1,300 meters downwind of the plant stacks The screening modeling results are presented in Table 2-26 and World Bank Guidelines are shown in Table 2-27 All other predictions, except for SO_2 24-hour ground level concentrations under the original 3 stack design, are within the World Bank Guidelines However, without current background air pollution concentrations or information such as contributions from other existing sources of pollution, a full determination of the impacts on air quality from continued operation of TES-1 is not possible at this time

There are no known significant impacts to air quality resulting from the present power transmission and distribution and district heating systems

Impact on Surface Water Quality

TES-1 utilizes two (2) sources of water for operation, river water supplied by two (2) canals via pumping stations and the city water supply The pumping stations have 13 circulation pumps with a total capacity of 117,500 m^3/hour, equaling the capacity of the canals The river water is used in turbine condensers, transporting ash for disposal, fire fighting, and domestic needs Excess water is discharged back to the river via a concrete return canal without treatment The impact

of the plant liquid effluent on the river quality could not be assessed as no further information on the plant effluent was available at the time this plan was prepared

Water from the city water supply is used in the plant for boiler makeup water and district heating supply makeup water The source of the city water supply are groundwater wells The water used for boiler and district heating makeup is treated onsite to remove hardness and carbon dioxide The boiler makeup water is further treated to remove mineral salts and other impurities

TABLE 2-25
TES-1 DISPERSION ANALYSIS CALCULATION DATA

TES-1 Plant Boiler Characteristics

	1-13	14-24	Total						
Design Steam Production t/hr per Boiler	160	220	4500						
Coal Firing Rate, kg/hr per Boiler	25,190	37 400	738 870						
Flue Gas Flow per Boiler, m^3/hr	282 300	405,000	8,124,900						
Flue Gas Temperature C	140	140	140						
Coal Characteristics									
Sulfur wt%	0 8	0 8							
Ash, wt%	36 2	37 1							
Emission Rates per Boiler									
SO_2 g/sec	95	141	2,791						
NO_x, g/sec	31	54	992						
Particulates g/sec	91	139	2,712						
Pollutant Concentrations									
SO_2 mg/m^3	1214	1266	1237						
NO_x mg/ m^3	393	478	440						
Particulates, mg/ m^3	1163	1233	1202						

Flue Gas to Stack

	Original Design			Present Operation					Intended Future Operation
Stack Number	1	2	3	1	2	3	New	Total	New
Stack Height meters	150	180	180	150	180	180	300		300
Boilers to Each Stack	1-6	7-14	15-24	1-6	7-14	17	15 16 18 24		All
Number of Boilers	6	8	10	6	8	1	9	24	24
Emission Rates per Stack									
SO_2, g/sec	571	807	1413	571	807	141	1,272	2 791	2 791
NO_x, g/sec	185	270	537	185	270	54	484	992	992
Particulates g/sec	547	777	1388	547	777	139	1 249	2 712	2,712
Stack Diameter meters	4 8	6	6	4 8	6	6	9 6		9 6
Flue Gas To Stack m^3/hr	1 693 800	2 381,100	4,050,000	1 693,800	2,381,100	405 000	3 645 000	8 124 900	8 124 900
Stack Discharge Velocity m/sec	26	23	40	26	23	4	14		31

Assumptions SO_2 Emissions are Reduced by 15% by Alkali Injection
No_x Emissions are Reduced by 18% by Alkali Injection
Particulate Collection Efficiency (Scrubbers and ESPs) is 96%

TABLE 2-26
ISCST2 SCREENING MODELING RESULTS
Maximum Ground Level Concentrations, ug/m^3

Average Times	SO_2			Total Suspended Particulate			No_x		
	Case I*	Case II*	Case III*	Case I*	Case II*	Case III*	Case I*	Case II*	Case III*
1-hour	701 6	721 1	516 3	677 4	696 7	501 6	239 4	247	183 5
24-hour*	280 6	288 4	206 5	271	278 7	200 6	95 8	98 8	73 4
Annual Mean**	70 2	71 2	51 6	67 7	69 7	50 2	23 9	24 7	18 4

*Case I Original design using three (3) separate stacks
Case II Present operation using four (4) separate stacks
Case III Proposed future operation using a single 300-M stack

*The 24-hour concentrations were estimated by multiplying the 1-hour concentration by a factor of 0 4

**The annual mean concentrations were estimated by multiplying the 1-hour concentration by a factor of 0 1

TABLE 2-27

1995 WORLD BANK GUIDELINES FOR GROUND LEVEL CONCENTRATION ug/m^3

Averaging Times	SO_2	Total Suspended Particulate	NO_x
1-hour	-	-	400[3]
24-hour	250[1]	-	-
Annual Mean	80	80[2]	-

Notes
(1) 250 ug/m^3 not to be exceeded more than 7 times per year
(2) 50 ug/m^3 for both PM_{10} and particulates 4 5 ug or less in size
(3) Also 200 ug/m^3 not to be exceeded more than 7 times per year

117

River water is used in large quantities in a slurry system to transport fly ash and bottom ash collected from all of the boilers to an ash disposal pond The ash disposal area is approximately 3 5 kilometers north of the plant The ash is allowed to settle out of the sluice water in the pond, eliminating virtually all of the suspended solids (suspended solids average less than 50 mg/l) The water is decanted through an overflow piping system and discharged to an irrigation canal without further treatment The discharge water is sampled and analyzed on a monthly basis for temperature, pH, oxidizability (COD), dissolved oxygen, biological oxygen demand (BOD), total suspended solids, hardness, ammonia, nitrites, nitrates, chlorides, sulfates, and total petroleum hydrocarbons (TPH) The sample analysis results for 1995 are provided below in Table 2-28 It should be noted however, that the results for petroleum hydrocarbons (0) may be an indication that this analysis is currently not performed Considering the quantity of lubricating oils, fuel oil, and other petroleum products used at TES-1, it should be assumed that some level of petroleum contamination does exist in the plant effluent

Sample analysis was recently performed (September 1995) on the discharge water for concentration of copper, iron, nickel, zinc, cadmium, and chromium Analysis for lead content was not performed The analytical results indicated that concentrations of the listed metals were below regulatory limits as set by the Ministry of the Environment as well as the limits proposed by The World Bank _The results of the metals analysis and the Ministry and World Bank standards are provided in Table 2-29

Although the analysis of the discharge water indicates compliance with Russian, World Bank, and USEPA requirements for power plant effluent parameters, the lack of routine analysis for metals including lead, as well as data for thermal influence on the receiving waters, prevents a complete assessment of impact at this time In addition, it should be noted that during the period of sampling, little if any coal was being fired in the plant Continued testing of the discharge water for heavy metals is recommended, with special emphasis on samples collected during the heating season when many of the boilers are fired with coal

There are no known significant impacts to surface water quality resulting from the present power transmission and distribution and district heating systems

Impact on Groundwater Quality

The ash disposal ponds previously used and now closed, as well as the currently used pond are unlined and have no means of secondary containment As there are no groundwater monitoring wells in the area reported to be sampled on a routine basis the impact from the present method of ash disposal on local aquifers cannot be assessed at this time

There are no known significant impacts to groundwater quality resulting from the present power transmission and distribution and district heating systems

118

TABLE 2-28

AVERAGE MONTHLY ANALYSIS OF ASH POND DRAINAGE WATER IN 1995

PARAMETER MEASURED	JAN	FEB	MAR	APR	MAY	JUN	JUL	AUG	SEP	Allowable Local Discharge Limits	Proposed World Bank Discharge Limits
Temperature (þC)	7 2	9 0	10 7	16 7	18 0	21 8	22 8	26 0	24 0	-	3 þC Rise
pH	8 5	8 4	8 5	8 4	8 4	8 5	8 3	8 3	8 3	6 5 - 8 5	6 - 9
Oxidizability (COD), mg O_2/liter	2 09	1 89	2 37	2 85	2 77	2 55	1 93	1 68	2 52	-	-
Dissolved Oxygen, mg O_2/liter	12 02	11 58	12 19	12 09	11 71	12 06	9 15	8 38	9 42	þ 4	-
Biochemical Oxygen Demand, mg O_2/liter	2 40	1 88	1 66	0 95	1 63	1 17	2 59	1 22	1 83	þ 6	-
Total Suspended Solids, mg/liter	40 3	34 7	37 6	49 0	40 83	31 83	35 75	33 6	34 25	þ 97 75	50
Hardness, mg - equivalent/liter	3 6	3 4	2 7	3 15	3 8	4 1	3 35	3 7	4 35	-	-
Ammonia, mg /liter	0 06	0 14	0 13	0 06	0 05	0 11	0 08	0 035	0 07	þ 2 0	-
Nitrites, mg /liter	0 015	0 021	0 019	0 023	0 028	0 025	0 043	0 035	0 026	þ 0 3	-
Nitrates, mg /liter	3 9	2 3	2 6	2 7	2 6	2 3	2 7	2 75	2 7	þ 7 0	-
Chlorides, mg /liter	22 0	19 2	21 0	20 2	20 1	20 1	17 6	16 4	15 7	þ 350	-
Sulphates, mg /liter	98 7	98 7	98 0	93 3	85 3	84 7	88 7	68 0	54 0	þ 500	-
Petroleum Products, mg /liter	0 0	0 0	0 0	0 0	0 0	0 0	0 0	0 0	0 0	þ 0 15	-

TABLE 2-29

ANALYTICAL RESULTS FOR METALS OF ASH POND DRAINAGE WATER SEPTEMBER 7, 1995

Metals Analysis Concentration, mg/liter	Analytical Test Results	Allowable Local Discharge Limits	Proposed World Bank Discharge Limits
Copper (+2)	0 05	1 0	0 5
Iron (+3)	0 1	0 5	1 0
Nickel (+2)	0 03	0 1	0 5
Zinc (+2)	Not Detected	1 0	0 5
Cadmium (+2)	Not Detected	0 01	N/A
Chromium (+3)	0 05	0 5	0 5

Additional Impacts

As an ash disposal pond is filled to its capacity, a new pond is utilized and the old pond is closed by covering the ash with a layer of soil Upon closure, use of the "reclaimed" pond is returned to a collective farm which can now use the land for "agricultural purposes" Although the farm apparently owns the property a recent inspection of the area showed neither farming or grazing on either the reclaimed land or the surrounding area The inspection further indicated that the closure method was insufficient for preventing excessive amounts of ash from blowing off the disposal area This ash dusting has the potential impact of exposing persons living downwind of the ash disposal area to ambient air which probably exceeds World Bank particulate concentration limits

The potential also exists for migration of ash to local surface water bodies as a result of storm water run-off During the rainy season the transport of ash in this manner could have a significant impact on downstream water quality and may also result in siltation of streams and rivers

2 5 2 Potential Impacts Anticipated During Implementation of the Proposed Refurbishment Project

This section identifies the environmental impacts which may result during the proposed refurbishment of the TES-1, the District Heating, and Transmission and Distribution Systems

Release of Asbestos Containing Material to the Environment During Refurbishment of TES-1.

During the course of the TES-1 refurbishment, it is likely equipment containing or insulated with asbestos containing material (ACM) may need to be removed or modified Removal of ACM which is or which can readily become friable, by untrained personnel and without the use of proper procedures and equipment could result in the release of asbestos fibers into the environment The ability of asbestos to pose a serious long-term health hazard impact has been established

Release of Asbestos Containing Material to the Environment During Refurbishment of the District Heating System

As in the case of TES-1 refurbishment, removal of ACM withoout the use of proper procedures and equipment could pose a serious health hazard

121

Discharge of Oil Containing Polychlorinated Biphenyl to the Environment

During a recent inspection of TES-1, it was reported that previous analysis of on site transformer oils have indicated no polychlorinated biphenyl (PCB) content Additional samples have also been collected and analyzed by American Electric Power Energy Services, Inc Analytical results indicate that very small traces of PCBs were detected in the samples Although the laboratory could not quantify the actual concentration because the PCBs appeared to be of foreign origin, they did report that they believe the concentration to be less than 10 mg/kg (ppm) Based on the report from TES-1 personnel that PCBs were not found in on site transformer oil, during previous sampling and the current report from AEP, no potential impact from a release of PCBs can be expected

Fugitive Dusting During Construction

Equipment handling during refurbishment at TES-1 and construction of a new ash disposal pond will require the use of heavy machinery and large earth moving equipment During the construction periods use of this equipment could cause the release of fugitive dust Fugitive dusting could impact local air quality by exceeding the regulatory limits for ambient air particulate concentration

2 5 3 Potential Impacts Resulting from the Completion of the Proposed Refurbishment Project and Continued Operation of the Facility

This section identifies the environmental impacts which may result from the operation of the TES-1, the District Heating, and Transmission and Distribution Systems following completion of the proposed refurbishment project

Potential Positive Environmental Impacts

Seven of the boilers at TES-1 will be rehabilitated as part of the proposed Priority One tasks The primary focus of the refurbishment project is to extend the plant's useful life and improve plant equipment reliability It is estimated that the 7 boilers being refurbished could have a potential increase in efficiency of 2 0% as a combined effect of the individual tasks in the project

An analysis of the impact of rehabilitation of both the Bishkek CHP plant and the District Heating system indicates significant energy saving as a result of these improvements Projections for fuel consumption for the year 2000 are as follows

Fuel	Case 1 (No Rehab)	Case 4 (Full Rehab)
Coal, Tcal	7373	7003
Mazut, Tcal	152	144
Natural Gas, Tcal	468	113
Total, Tcal	7993	7260

Total annual energy production (Tcal) is reduced by more than 9% with more than half (5%) the result of reduced coal firing Since both SO_2 and particulate emissions are due to cvoal firing, a 5% reduction in annual emissions of both are anticipated With NO_x emissions related to total energy production as well as fuel type, an even greater reduction in NO_x emissions is anticipated

Reduction in Plant Particulate Emissions

A reduction in particulate emissions would be possible with the replacement of the current particulate collection equipment The present electrostatic precipitators have a collection efficiency between 96 and 97% resulting in particulate concentration emissions of 2 64 g/Nm^3 when firing Karaganda coal Reduction to an emission concentration of 1 32 g/Nm^3 could be achieved with installation of new units operating at 98% efficiency However, it would require removal efficiency in the range of 99 8% to achieve the particulate emission concentration of 150 mg/Nm^3 proposed for rehabilitated thermal units in Russia

Replacement of these electrostatic precipitators with new high efficiency units would be extremely costly An alternative to precipitator replacement is the application of flue gas conditioning technology to improve fly ash collection efficiency in the existing units This technology utilizes additive injection (typically SO_3) to modify the electrical resistivity of the fly ash The technology is most effective when applied to low sulfur coal firing and is anticipated to increase efficiency to about 99% ash collection

The investment cost is estimated at about $600,000 per boiler

Addition of a Flue Gas Emission Monitoring System

Evaluation of several types of emission monitoring systems suggests that an in-situ stack monitoring system is the most applicable technology for use in the NIS Systems of this type analyze components in the flue gas, in-situ, by projecting an infrared light source across the stack and measuring the signal, at specific wave lengths, at a detector installed on the far side of the stack

Advantages of such a system are the fact that a single in-situ analyzer can monitor SO_2, NOx, CO_2, CO (or O_2) and Opacity simultaneously, without withdrawing a sample of the gas, and that filters may be used for daily automatic calibration instead of calibration gases The analyzer mounts on flanges installed on the stack and requires only an external power supply and an output cable to bring the signals to the data logging computer (in the control room)

Monitoring of flue gas emissions could be accomplished with a single stack monitor if all boilers were ducted to discharge to the new 300 meter stack Under the present conditions, where several stacks are still in use at the plant, two (2) in-situ emission monitors would be provided

Improved Boiler Operation Monitoring

Due to the age of the facility and the lack of boiler operating condition monitoring equipment, the boilers run at a very high air to fuel ratio This operating condition contributes to a significant energy loss in flue gas It is anticipated that the proposed boiler refurbishment will reduce the amount of excess air drawn into the 7 refurbished boilers It is recommended however, that at minimum, each of the 7 boilers to be refurbished, should also be equipped with combustion analyzers Combustion analyzers should enable plant operating personnel to optimize the fuel/air ratio on these boilers and therefore improve the overall efficiency of the plant Combustion analyzers should be considered as necessary equipment in order to maximize the benefits of the initial capital investment

Improvement of Analytical Capability

The present analytical capability of the chemical laboratory at TES-1 is reported to be limited by its lack of modern equipment Consideration should be given to identifying specific routine analytical tests which, if performed by plant personnel would impove both efficiency of operation and reduce emission of pollutants into the enviornment Modern analytical equipment might include Atomic Absorption and Spectrometry for metals analysis and Chromotography for organics in waste water Combustion efficiency monitoring equipment might also be provided

It is recommended that proper training be provided for any new analytical equipment The capability of the lab is not only necessary to improve control of pollutant concentration in waste discharges, but may also be able to improve plant fuel efficiency by performing incoming fuel quality analysis

Radioactivity Content of Ash

There is currently no monitoring performed to determine the levels of radioactivity in the ash disposal area Due to the presence of naturally occurring radioactivity in coal and the residual ash, it is recommended that radioactivity be measured and recorded at the ash disposal areas and for background levels This information can then be used to determine if and to what extent a problem exists, and help identify what measures can be taken to reduce the potential for exposure of personnel to radioactivity above regulatory limits

TES-1 Adverse Environmental Impacts

It should be noted that based on the current scope of the proposed project, adverse impacts identified in Section 2 5 1 can be expected to continue with little or no change

Rehabilitation of TES-1 will not result in an increase in the plants heat output as a result of increasing the amount of coal that can be burned With no increase in potential coal consumption, no impact to ambient air quality from an increase in plant air pollutant emissions, or increased ash production is anticipated Therefore, no significant adverse environmental impacts resulting from air emissions are anticipated as a result of completion of the proposed Priority One refurbishment tasks

Power Transmission and Distribution Adverse Environmental Impacts

Currently all maintenance at substations and beneath existing transmission lines is performed manually and herbicides are not used to control vegetation The right-of-way for the proposed new transmission lines do not pass through populated areas or critical habitats The new lines will only pass through agricultural and mountainous areas, where the impact to vegetation will be minimal Therefore, the operation of a new AlaArcha Substation and subsequent transmission lines is not expected to create any adverse environmental impacts

District Heating Adverse Environmental Impacts

No negative impacts to the environment are anticipated as a result of the Priority One refurbishment tasks proposed for the District Heating System

2 5 4 Mitigating Measures to be Implemented During Refurbishment of TES-1, the District Heating, and Transmission and Distribution Systems

A Master Environmental Management Plan should be developed and implemented to systematically reduce the overall impact to the environment from TES-1, the ash disposal area, and the district heating system This plan would not only incorporate those investments identified in this report but would also include the prioritization for additional capital investment in plant operation and maintenance, efficiency and reliability improvements, environmental mitigating measures, monitoring plans, analytical equipment, and training programs, which are beyond the scope of this current project

The Master Environmental Management Plan would include obtaining existing environmental conditions on ambient air quality in the vicinity of the plant as well as areas downwind, water quality of local surface water bodies which are subject to impact by plant operation, groundwater quality in the vicinity of the plant and ash disposal area, and soil contamination This data would then establish the baseline against which the effectiveness of further investments in the plant could be compared

This section discusses mitigating measures which should be implemented during the refurbishment project to minimize the specific impacts identified above

Asbestos Control

Prior to commencement of any rehabilitation activities, a preliminary ACM survey should be performed on equipment and appurtenances involved in the rehabilitation project This survey is necessary to identify where ACMs are located in the plant and district heating system, what is the physical condition of the ACM, estimate the quantity of ACM which will be removed and the amount of time and cost necessary to complete the removal, and prepare for proper disposal of the ACM The ACM survey should be performed by personnel trained to recognize ACM, and evaluate its condition The actual removal of the ACM should be performed by personnel trained in the appropriate work practices for asbestos abatement which will involve

- Identification of sources and location of ACM to be removed
- The use of respiratory and protective clothing by workers and inspectors
- Isolating the work area where ACMs are to be removed from the surrounding areas
- Operation and maintenance of high efficiency particulate air filtration equipment
- Packaging ACMs for proper disposal as a hazardous waste
- Abatement area inspections and air sampling to assure compliance with acceptable limits

Rules and regulations for asbestos abatement have been adopted by many government authorities and such rules will be incorporated into the construction requirements for this project Contractors or others responsible for the rehabilitation activities will be required to comply with these regulations This will ensure that this work will have no significant impact on the environment or population

PCB Contamination

For any oil-filled electrical equipment that will be discarded as part of the project, the oil will be analyzed for PCB content to assure the method of disposal is in accordance with local regulations Typical methods of disposal for materials with no or low levels of PCBs include draining and reuse of oil as fuel, salvage of equipment for metal recovery, and landfilling unsalvageable drained equipment Methods of disposal for materials containing high levels of PCBs typically include draining and destruction of oil by high-temperature incineration, reuse of oil after chemical destructuion of PCBs, and decontamination and landfilling of drained equipment at a chemical waste landfill In some cases recovery of metals as scrap following decontamination of the equipment may be allowed For any oil-filled electrical equipment the will be serviced (requiring contact with or removal of the dielectric fluid), the oil will be analyzed for PCBs in order to determine appropriate handling procedures However, based on the current test results, no special disposal requirements or handling practices are anticipated

For any oil-filled electrical equipment that will be reused intact and without servicing as described above, no PCB analysis will be performed as the potential for impact from a release of PCBs is expected to be minimal

Any new electrical equipment that is installed as a part of the proposed project will be free of PCB contamination Any dielectric oil that is used in filling new or servicing of existing equipment will also be free of PCB contamination

Contaminated soils may be discovered at any time during the proposed rehabilitation of electrical equipment at TES-1 or electrical substations Areas that indicate significant quantities of oil have been spilled will be cleaned up by removal of visible signs of the oil The soil will be disposed of in accordance with local regulations for oil-contaminated debris

The levels of PCBs found through testing are indicative of minimal contamination of the oil Such incidental levels are common among transformers that have been in service for many years The introduction of trace PCBs usually occur as a result of equipment maintenance where hoses, pumps, filtering equipment, etc may have previously been in contact with PCB fluids In the United States, the Environmental Protection Agency (EPA) has recognized this fact and only regulates equipment which contains greater than 50 ppm PCB The only restrictions that the EPA places on oil containing

less than 50 ppm is to prevent its use as a sealant, coating, or dust control agent, such as for use in road oiling, pesticide or herbicide carrier, or rust preventative on pipes Based on the current analytical results, a complete and formal PCB replacement program does not appear to be necessary at this time It is however recomended that testing for PCBs continue to be performed on equipment to be discarded or serviced subsequent to completion of the refurbishment project

Landfill Operations.

In order to satisfy environmental regulations for ambient air particulate (dust) concentration and to prevent erosion at the disposal area, it is necessary to incorporate control measures Ash piles at the ash disposal area may cause potential impacts to the environment quality, if it not managed properly Without maintenance of the proper dust control during the operation phase, some ash particles may be lifted into the air by wind that may cause air pollution On the other hand, during rainy season the fine particles of the ash will be carried by rainwater run-off

The environment management to minimize these impacts should include

- Staged site development to minimize the area of ash exposed without soil and vegetal cover
- Seeding in the disturbed areas, if it will be left exposed more than 30 days
- Silt fence for erosion control constructed at the critical areas, i e , steeply sloped land
- Wherever possible, the existing vegetation will be retained
- The drainage system designed to handle the rain water run-off
- The rain water run-off velocity kept as low as possible by minimizing length and steepness of slopes
- Planting ground cover vegetation on closed (filled) sections of the ash disposal site
- Spraying the reclaimed ash pile with water to keep the surface of the pile wet and encourage vegetation to grow
- Surfaces utilized for vehicular traffic should be paved with gravel to prevent errosion of the surface and exposure of ash to the environment

Application of these measures to the ash disposal area is expected to control both surface erosion and dusting and eliminate any potential adverse impact on the environment

Institutional Capacity Building

The successful implementation of an Environmental Management Plan will result in the continued operation of the facility while minimizing adverse environmental impacts This will require a commitment from the utility ownership and management to meeting compliance requirements, and provide proper training in environmental monitoring and awareness of environmental goals The understanding, assistance, and cooperation of the relevant government agencies are also essential

Monitoring and Reporting Requirements

The project Construction Management Plan in conjunction with the Master Environmental Management Plan will need to include a Monitoring and Reporting Plan to be in place prior to, during, and after completion of the refurbishment project The Monitoring and Reporting Plan will identify what environmental parameters will be measured during specific phases of the project, frequency of monitoring, personnel responsible for performing the monitoring, routine monitoring report requirements and frequency of reporting, and actions to be taken, including who shall be notified, in the event of a non-conforming occurrence As performance specifications of individual project components may be part of the loan conditions, specific World Bank monitoring and reporting requirements will also be included
Implementation of the Environmental Management Plan should commence immediately after loan approval Environmental considerations identified in this report should be followed Schedule and milestones for all major activities will need to be developed

2 5.5 Recommendations for Future Investment Considerations

Completion of Connecting All Boilers to the 300-Meter Stack

The second scenario for which an air dispersion screening model was run involved having all 24 boilers connected to the one 300-meter stack Again the model was run based on all 24 boilers in continuous operation at full capacity The predicted impact from ducting all boilers to the 300-meter stack is a reduction in ground level concentrations of SO_2, NO_x, and particulates over the present configuration which utilizes all 4 stacks Ground level concentration of pollutants will be reduced by approximately 25% to 30% by redirecting the flue gas discharge to the higher stack

Ash Transport System Improvement

As previously described, the ash transport system presently in use utilizes large quantities of water in a slurry transport system The sluice water is ultimately discharged to an irrigation canal with no further treatment after the ash has settled from the water in a disposal pond Discharge water quality test results have been reported previously along with recommendations for additional sampling and testing, especially for heavy metals and oily waste (petroleum hydrocarbons)
Should testing indicate that improvement in discharge water quality is required to achieve the discharge limits, improvements to the transport system may be considered
The large quantity of sluice water makes it impractical to consider either evaporation or treatment of the full discharge and consideration might be given to recirculating the water back to the plant and reusing the sluice water A system is already in place to pump sluice water to the ash disposal

pond and consideration could be given to the utilization of some of the transport system piping to return water from the pond to the plant, either by gravity or by installing water recycle pumps

Although recycling of ash transport water may be possible, it is not possible to operate the system as a completely "closed-loop" system Dissolved solids in the water must be controlled to minimize scaling in the transport piping and this can only be accomplished by discharging a portion of the recirculating water The discharge water would be relatively high in dissolved solids, including metals, and would probably require treatment prior to discharge A waste water treatment facility would be required to process the small blowdown from the system
The presence of oily wastes in the waste water discharge could be addressed by providing a "skimming" system at the pond water discharge to collect oil from the surface of the discharge water Skimmed oil would be disposed of by burning, either in the steam boilers or in another device

Improvements to Ash Disposal Site

Recommended improvements to the ash disposal facility have been described previously in Section 2 5 4 - Landfill Operations Additional improvements could be made to help further reduce the potential for fugitive dusting from the ash disposal area It is recommended that stricter site access control measures, such as perimeter fencing, be installed to prevent illegal dumping as well as disturbance of surface soils and ash Illegally dumped trash should be removed and surface vegetation reestablished where it is absent Furthermore, establishment of a barrier between the ash disposal area and local residents could help limit the impact of airborne dust This barrier could be a natural barrier comprised of selected varieties of trees, chosen for their growth chacteristics i e speed of growth, expected height, longevity, and tolerance of unfavorable conditions

The present ash disposal pond has a remaining capacity of 4 to 6 years based on an average ash production rate for the past 5 years of 215,500 tonnes per year As part of the expansion of the ash disposal area, new ponds (cells) could be constructed with an impermeable liner A liner will prevent water from penetrating below the pond and reduce the potential for groundwater contamination Furthermore, proper closure of all existing closed cells with an improved cap and revegetated soil cover would further reduce the potential for impact on groundwater quality as well as improve ambient air quality by reducing fugitive dusting

Fire Suppression Equipment

Due to the natural release of volatile gases from the lignite coal piles in the storage area, small fires have occurred in the past at the plant It is recommended that fire hydrants and supplemental hoses and reels be installed in the vicinity of the coal storage areas Sufficient hoses should be provided to allow for effective coverage of the entire coal pile area

Wastewater Treatment

As described previously, it is recommended that routine analysis of discharge water be performed for petroleum contamination and heavy metals in the discharge water
In the event that analysis indicates the presence of petroleum contaminates, a treatment system should be installed at the plant, consisting of at minimum, an oil/water separator and waste oil storage tank As some quantity of mazut is already burned at the plant, the accumulated waste oil could be burned as well

A waste water treatment system designed to reduce heavy metal in the discharge water requires a significant capital investment and has a substantial operating cost, primarily associated with the use of costly water treatment chemicals For that reason, this technology is only considered for treatment of blowdown from a recirculating sluicing system Such treatment might include many of the following steps pH adjustment to precipitate heavy metals, aeration, coagulation and polymer addition, sulfide precipitation, sedimentation, filtration and final pH adjustment

2 6 PROJECT IMPLEMENTATION PLAN

This section deals with the implementation schedule for the improvements outlined in section 2 1 This schedule is expected to follow established World Bank guidelines The following is an estimate of the several steps/tasks involved in the initial stages of the project Some phases of the project will require a shorter amount of time for preparation of the tender documents (i e NDE equipment, air compressors, etc), these items will be identified in the schedules shown in Figures 2-3 to 2-5

Project Preparation and International Competitive Bid Process
Duration = 9 to 12 Months

- Application for renewal of construction permits - 3 to 6 months (outside plant proper)

  Before construction can begin, the Kyrgyz National Energy Holding Company must obtain construction approval from local government authorities This task is to be performed in parallel with other tasks identified below

- Preparation of all tender documents - 3 months

  The specification documents would provide a detailed definition of project scope, responsibilities of all involved parties, preliminary location plan, equipment specifications, material specifications, labor specifications and guidelines if any, for the supply of materials and labor for project implementation, guidelines for installation specification, and commercial terms and conditions

- Preparation of Request for Quotation (including owners review) - 1 month

  Preparation of request letter and finalize bidders list Delivery of RFQ to potential vendors

- Preparation of Bids - 2 months

  Time for potential bidders to review project RFQ and prepare comprehensive, lump-sum bid for each bid package

- Evaluation of Bids - 2 months

  Review and evaluation of bids received Clarification of technical and other issues

- Award Bids - 1 month with contract negotiations

Rehabilitation Packages

The work to be performed in the rehabilitation of the district heating system, TES-1, and the electrical transmission & distribution systems will be broken down into specific packages Tables 2 -1 to 2-3 show an overview of the packages, the in-service dates, and the amount of money that will be spent in each year of the rehabilitation packages Figures 2-3 to 2-5 show the corresponding schedule for the packages

Table 2-30

Bishkek Thermal Electric Station Implementation Plan						
PROJECT DESCRIPTION	SERVICE DATE	TOTAL COST, USD	FORECAST OF CAPITAL EXPENDITURES			
			1996	1997	1998	1999
Boiler Rehabilitation						
PACKAGE 1						
Refurbishment of Boilers No 14 to 20	1/1999	$3,803,000	N/A	$1,788,000	$2,015,000	N/A
SUBTOTAL		**$3,803,000**	**N/A**	**$1,788,000**	**$2,015,000**	**N/A**
Turbine/Generator Rehabilitation						
PACKAGE 1						
Commissioning of Unit #11 and other T/G items	1/1999	$5,720,000	N/A	$2,860,000	$2,860,000	N/A
PACKAGE 2						
Procurement of NDE equipment	1/1998	$270,000	N/A	$270,000	N/A	N/A
PACKAGE 3						
Purchase of Turbine No 11	1/1999	$2,275,000	N/A	$2,275,000	N/A	N/A
SUBTOTAL		**$8,265,000**	**N/A**	**$5,405,000**	**$2,860,000**	**N/A**

Bishkek Thermal Electric Station Implementation Plan						
PROJECT DESCRIPTION	SERVICE DATE	TOTAL COST, USD	FORECAST OF CAPITAL EXPENDITURES			
			1996	1997	1998	1999
Instrumentation & Controls Rehabilitation						
PACKAGE 1						
Procurement and installation of transmitters, instrument valves and racks, and accessories	1/1999	$1,554,000	N/A	$865,000	$689,000	N/A
PACKAGE 2						
Procurement and installation of the Plant Computer System	1/1999	$730,000	N/A	$438,000	$292,000	N/A
SUBTOTAL		**$2,284,000**	**N/A**	**$1,303,000**	**$981,000**	**N/A**

135

Bishkek Thermal Electric Station Implementation Plan						
PROJECT DESCRIPTION	SERVICE DATE	TOTAL COST, USD	FORECAST OF CAPITAL EXPENDITURES			
			1996	1997	1998	1999
Environmental and Other Plant Systems Rehabilitation						
PACKAGE 1						
Procurement and installation supervision of Emission Monitoring Devices	1/1998	$1,800,000	N/A	$1,800,000	N/A	N/A
PACKAGE 2						
Procurement and installation of Plant Air Compressors	1/1998	$234,000	N/A	$234,000	N/A	N/A
PACKAGE 3						
Procurement and installation of Rotary Car Dumpers equipment	1/1998	$1,340,000	N/A	$1,340,000	N/A	N/A
SUBTOTAL		**$3,374,000**	**N/A**	**$3,374,000**	**N/A**	**N/A**
GRAND TOTAL		**$17,726,000**	**N/A**	**$11,870,000**	**$5,856,000**	**N/A**

Table 2-31

Bishkek District Heating Enterprise Implementation Plan						
PROJECT DESCRIPTION	SERVICE DATE	TOTAL COST, USD	FORECAST OF CAPITAL EXPENDITURES			
			1996	1997	1998	1999
Piping Network Rehabilitation						
PACKAGE 1						
Delivery of pre-insulated pipe and associated material	7/1999	$8,910,000	$625,000	$4,220,000	$2,740,000	$1,325,000
PACKAGE 2						
Reconstruction of UG and Aerial piping under supervision of engineering consultant	7/1999	$4,590,000	$322,000	$2,175,000	$1,460,000	$633,000
SUBTOTAL		**$13,500,000**	**$947,000**	**$6,395,000**	**$4,200,000**	**$1,958,000**
Rehabilitation of Pumping Stations						
PACKAGE 1						
Installation of frequency converters and new pumps by a foreign contractor	6/1997	$1,160,000	$645,000	$515,000	N/A	N/A
SUBTOTAL		**$1,160,000**	**$645,000**	**$515,000**	**N/A**	**N/A**

137

Bishkek District Heating Enterprise Implementation Plan						
PROJECT DESCRIPTION	SERVICE DATE	TOTAL COST, USD	FORECAST OF CAPITAL EXPENDITURES			
			1996	1997	1998	1999
Installation of Control and Regulation System						
PACKAGE 1						
Installation of computerized SCADA system for automatic operation of DH system	6/1997	$790,000	N/A	$790,000	N/A	N/A
SUBTOTAL		**$790,000**	**N/A**	**$790,000**	**N/A**	**N/A**
Modernization of Substations						
PACKAGE 1						
Delivery of foreign equipment	6/1999	$8,872,500	$863,000	$4,530,500	$2,951,000	$528,000
PACKAGE 2						
Installation of equipment by local contractor	6/1999	$877,500	$85,000	$444,000	$289,000	$59,500
SUBTOTAL		**$9,750,000**	**$948,000**	**$4,974,500**	**$3,240,000**	**$587,500**
GRAND TOTAL		**$25,200,000**	**$2,540,000**	**$12,674,500**	**$7,440,000**	**$2,545,500**

Table 2-32

Transmission and Distribution Implementation Plan						
PROJECT DESCRIPTION	SERVICE DATE	TOTAL COST, USD	FORECAST OF CAPITAL EXPENDITURES			
			1996	1997	1998	1999
Ala Archa & Chuiskaia Substations						
PACKAGE 1						
ALA ARCHA 220/110 kV	12/99	$10,793,000	$540,000	$2,160,000	$3,775,000	$4,318,000
CHUISKAIA 220/110 kV	12/98	$2,272,000	$0	$340,000	$1,705,000	$227,000
SUBTOTAL		**$13,065,000**	**$540,000**	**$2,500,000**	**$5,480,000**	**$4,545,000**
System Protection Upgrades & Transformer Replacements/Additions						
PACKAGE 1						
ORTO ALYSH 110/35/10 kV	12/98	$1,244,000	0 00	$124,000	$996,000	$124,000
SELECTRO 110/10 kV	12/97	$477,000	$50,000	$377,000	$50,000	0 00
SELEKCCIONAIA 110/10 kV	12/97	$1,330,000	$133,000	$1,064,000	$133,000	0 00
NOVO TROICKAIA 110/35/10 kV	12/98	$1,916,000	0 00	$191,000	$1,534,000	$191,000
SYSTEM PROTECTION	97-98	$3,454,000	$345,000	$865,000	$2,070,000	$174,000
PACKAGE 2						
Metering Devices & Tools	02-00	$3,200,000	$0	$1,300,000	$1,300,000	$600,000
SUBTOTAL		**$11,621,000**	**$528,000**	**$3,921,000**	**$6,083,000**	**$1,089,000**
GRAND TOTAL		**$24,686,000**	**$1,068,000**	**$6,421,000**	**$11,563,000**	**$5,634,000**

Project Implementation Plan, Figure 2-4

ID	Name
1	**BDHE Rehabilitation**
2	Preparation of Tender Documents and Bidder Response*
3	Tender Evaluation & Contract Award*
4	
5	**Pipework Rehabilitation**
6	Package No 1
7	Preparation of tender documents bidder response & evaluation and contract award
8	Engineering/Procurement
9	Package No 2
10	Construction
11	
12	**Pumping Station Rehabilitation**
13	Package No 1
14	Engineering/Procurement
15	Construction
16	
17	**Automatic Control System Installation**
18	Package No 1
19	Engineering/Procurement
20	Construction
21	
22	**Substation Rehabilitation**
23	Package No 1
24	Engineering/Procurement
25	Package No 2
26	Construction

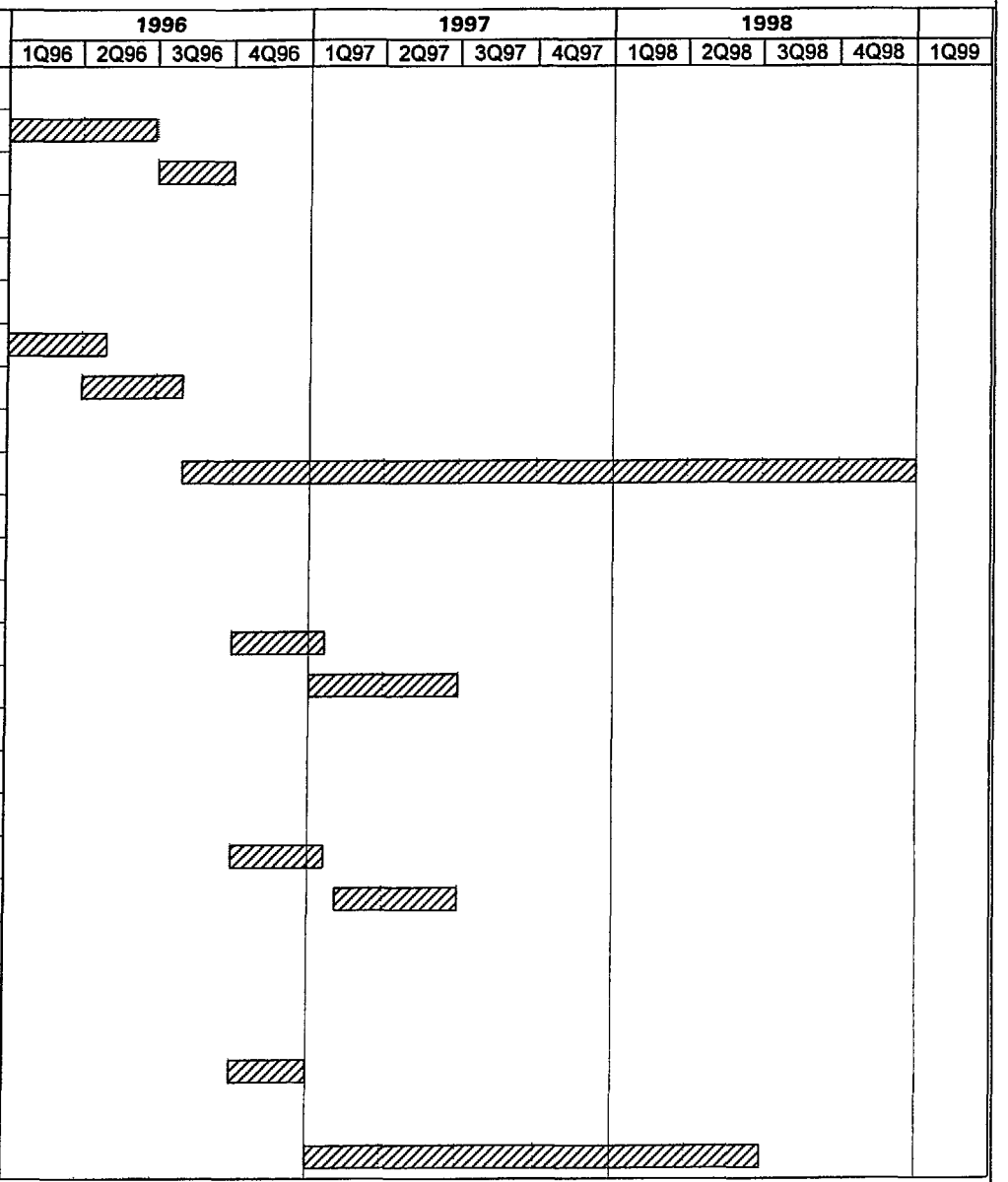

* Items 2 and 3 (Tender document preparation and bid evaluation) apply to all the items described below unless shown other wise

Project Implementation Plan, Figure 2-3

ID	Name
25	**Instrumentation & Controls Rehabilitation**
26	Package No 1 (Various Plant I & C s)
27	Engineering & Design
28	Procurement
29	Construction
30	Package No 2 (Plant Info System)
31	Engineering & Design
32	Procurement
33	Construction
34	
35	**Environmental & Other Plant Systems Rehabilitation**
36	Package No 1 (Emission Monitoring)
37	Preparation of tender documents bidder response & evaluation and contract award
38	Engineering/Procurement
39	Construction/Installation
40	Package No 2 (Air Compressors)
41	Engineering/Procurement
42	Construction
43	Package No 3 (Car Dumpers)
44	Engineering & Design
45	Procurement
46	Construction

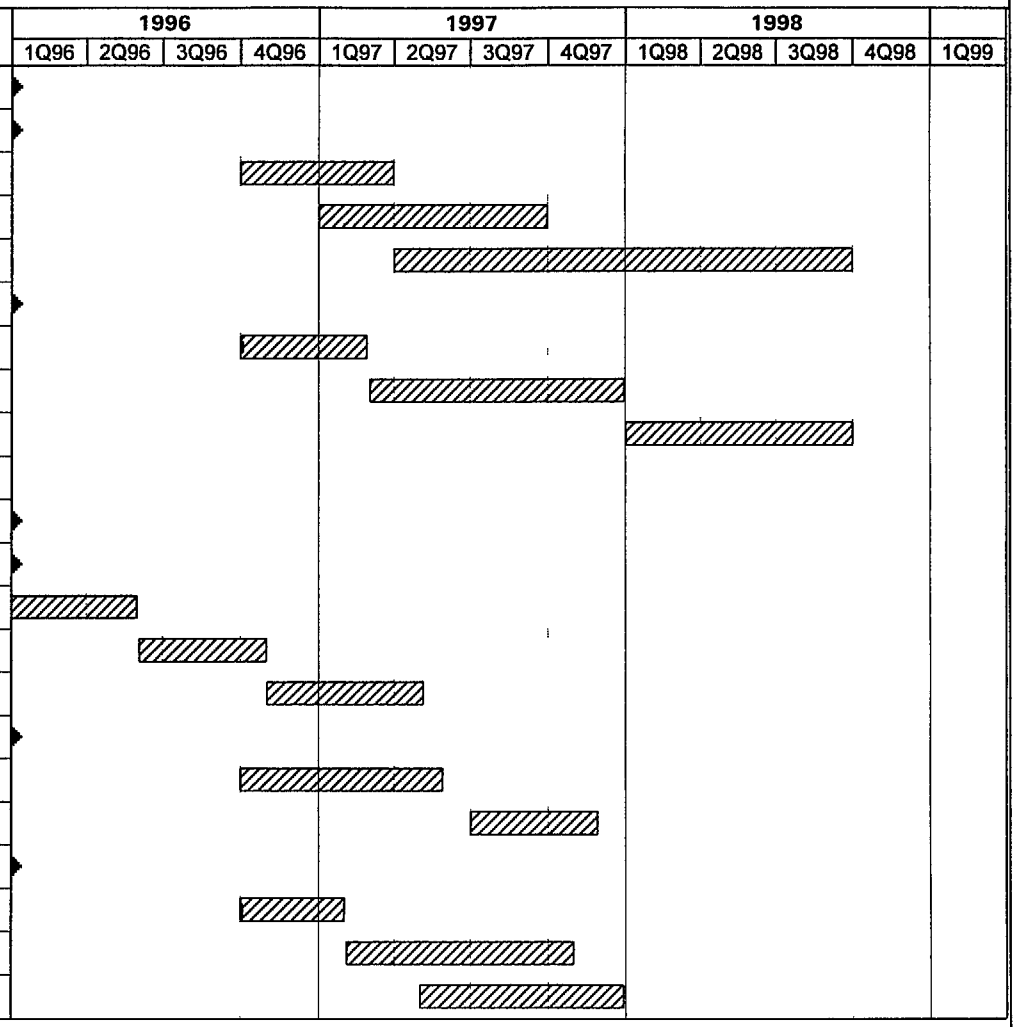

* Items 2 and 3 (Tender document preparation and bid evaluation) apply to all the items described below unless shown other wise

Project Implementation Plan, Figure 2-3

ID	Name
1	**Bishkek TES-1 Rehabilitation**
2	Preparation of Tender Documents & Bidder Response*
3	Tender Evaluation & Contract Award*
4	
5	**Boiler Rehabilitation**
6	Package No 1
7	Engineering & Design
8	Procurement
9	Construction Phase 1 (Three Boilers)
10	Construction Phase 2 (Four Boilers)
11	
12	**Turbine/Generator Rehabilitation**
13	Package No 1 (Commision T/G #11 and other T/G items)
14	Engineering & Design
15	Procurement
16	Construction
17	Package No 2 (NDE Equipment)
18	Preparation of tender documents bidder response & evaluation and contract award
19	Procurement & Installation
20	Package No 3 (Purchase of T/G #11)
21	Procurement/Negotiations
22	Engineering & Design
23	Construction (See item 16)
24	

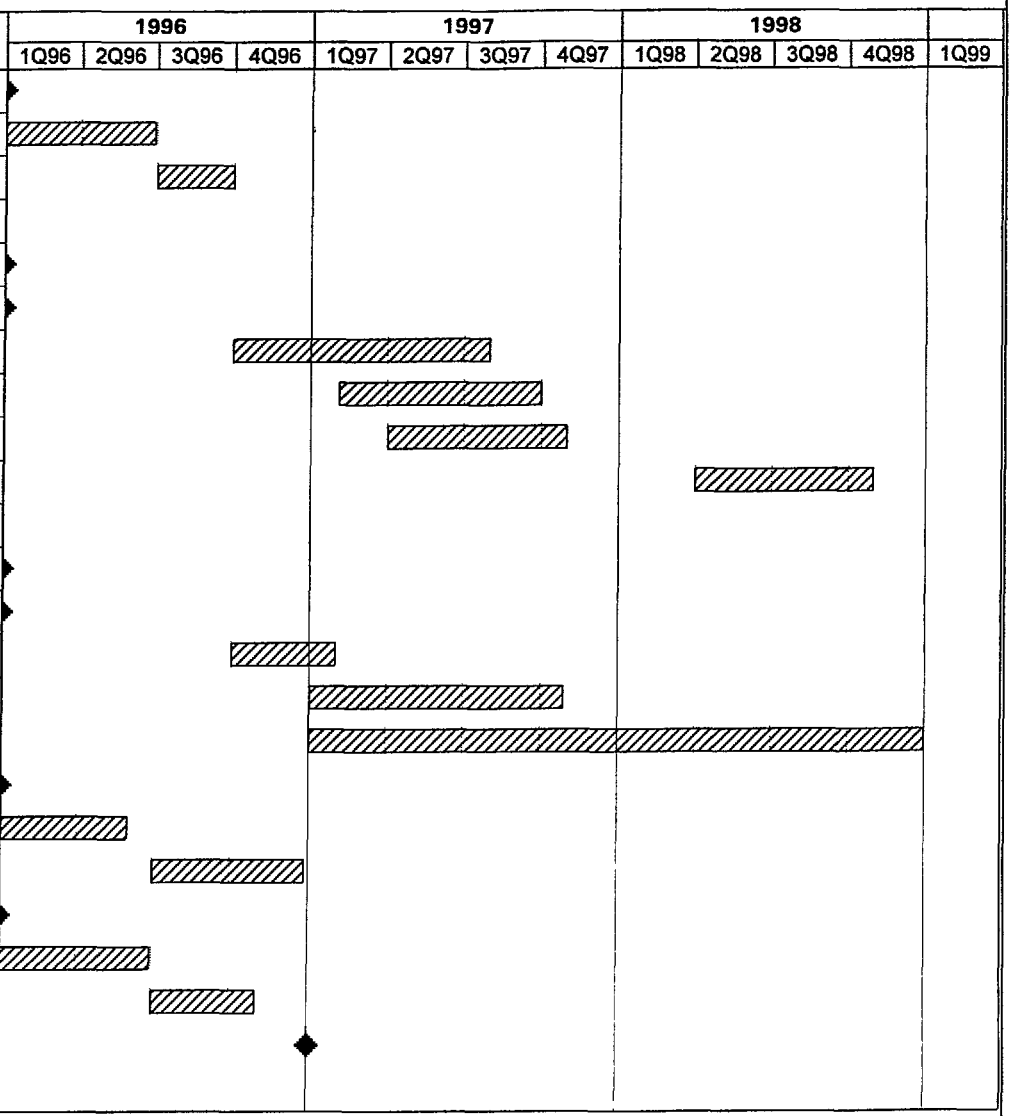

* Items 2 and 3 (Tender document preparation and bid evaluation) apply to all the items described below unless shown other wise

142

Project Implementation Plan, Figure 2-5

ID	Name
1	**Electrical Transmission & Distribution Rehabilitation**
2	Preparation of Tender Documents and Bidder Response*
3	Tender Evaluation & Contract Award*
4	
5	**Ala Archa & Chuiskaia Substations**
6	Package No 1
7	Permitting & Start up
8	Engineering & Design
9	Procurement
10	Construction
11	
12	**System Protection Upgrades & Transformer Replacements/Additions**
13	Package No 1 (Substation Upgrades)
14	Engineering & Design
15	Procurement
16	Construction
17	Package No 2 (Metering Devices Tools, and Spare Parts)
18	Engineering & Procurement
19	Installation

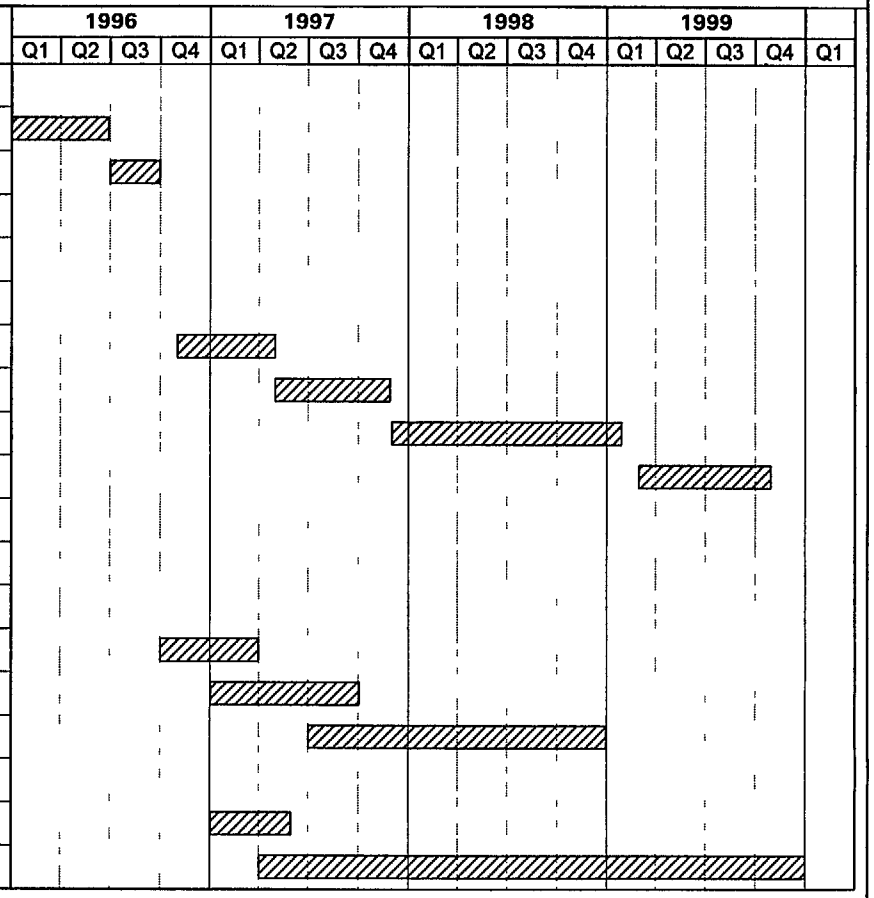

* Items 2 and 3 (Tender document preparation and bid evaluation) apply to all the items described below unless shown other wise

Package Descriptions

TES-1 Rehabilitation

Boiler Rehabilitation

Package No 1

In Service Date	-	1/1999
Engineering and Design	-	10 months
Procurement	-	8 months
Construction, 1997	-	7 months (3 Boilers)
Construction, 1998	-	7 months (4 Boilers)

This package includes the following

For Boilers No 14 to 20 inclusive,

- Boiler Refractory, Insulation, Lagging and Casing (BRILC) refurbishment/ replacement and furnace and convective pass rooftubes tube penetration seals refurbishing
- Partial replacement (approximately 15%) of the furnace tubes (vertical tubewalls) that have cold side corrosion and fireside erosion
- Furnace and convective pass roof superheater tubes partial replacement (approximately 15%) The finishing tertiary superheater tube elements and pendent superheater have no major damage, thus they will not be replaced

Turbine/Generator Rehabilitation

Package No 1, Commission of T/G #11 and other T/G items

In Service Date	-	1/1999
Engineering and Design	-	4 months
Procurement	-	10 months
Construction	-	24 months

This package includes the following

- Commissioning of Turbine Unit 11 Commissioning of this unit will enhance plant electric capacity and heat supply capability This turbine is a modified version of the T-115/125-130 turbine the manufacture of which started in 1989 The unit has two controlled heat extraction and a simplified regenerative feedwater heating system, and consists of two cylinders It was specifically developed to be used for replacement of old units during rehabilitation of existing

144

power plants The version (Type 1) which is available at the Bishkek plant is most effective in the heating regimes as it has short last row blades The unit, however, must operate with the main steam parameters existing at the Bishkek Thermal Station With such initial steam parameters this unit will add about 90 MW electric capacity and up to 175 Gcal/h of thermal capability This is sufficient capacity to enable the removal of Units 1 and 2 from service in a subsequent upgrade phase

- In order to commission this turbine various additional feedwater heating cycle equipment must be procured (As it was mentioned above, only the turbine itself and the main condenser have been procured by the plant) These items include the generator, feedwater heaters, the associated feedwater piping, valves, and pumps, and the associated condensate piping, valves, and pumps

- Replacement of condenser tubes in Unit 3 condenser

- Replacement of the turbine shaft sealing system components at the front end of the high pressure turbine No 7 This will substantiality decrease the gland seal steam leakage at the front labyrinth seals of the high pressure section

- Replacement of the flexible coupling connecting the HP and combined IP-LP rotors of Unit 8 turbine together with the No 2 bearing to eliminate low frequency vibration problems at partial loads

- Provide portable vibration monitoring equipment to be able to systematically monitor shaft vibration at bearings and to provide for planned replacement of expensive Babbit metal This equipment should also be initiated during rotor balancing

Package No 2, NDE Equipment

In Service Date	-	1/1998
Engineering and Design	-	N/A
Procurement/Installation	-	6 months

This package includes the following

- The purchase of state-of-the-art NDE equipment Due to the advanced age of this plant it is essential that systematic monitoring of its many parts be continued and expanded using modern equipment Use of this equipment in well planned metal control program is expected to increase availability and reliability since unplanned shutdowns can be minimized It is also expected to contribute to safer operation, since with proper metal condition monitoring potential failures can better be predicted and avoided

Package No 3, Purchase of T/G #11

In Service Date	-	1/1999
Engineering and Design	-	4 months
Procurement/Negotiations	-	6 months
Construction	-	24 months

This package includes the following

- Cost of Turbine Generator #11 Currently, this unit is in storage in Bishkek Negotiations will be performed with the Russian builders for final payment of the unit Once this is complete, the commissioning of the unit can take place (See Package No 1)

Instrumentation & Controls Rehabilitation

Package No 1, Various Plant I & C's

In Service Date	-	1/1999
Engineering and Design	-	6 months
Procurement	-	9 months
Construction	-	18 months

This package includes the following

- Upgrade of plant information systems

  Replace existing control room indicting devices (meters, recorders, indicators etc) with work stations in each of the five central heating control rooms, each of the two main control rooms and the water treatment control room

- Supply infrared thermometers for leak detection (heat spy) These would be used for detecting missing or deteriorating insulation in the high temperature piping system

Package No 2, Plant Information System

In Service Date	-	1/1999
Engineering and Design	-	5 months
Procurement	-	9 months
Construction	-	8 months

This package includes the following

- Add personal computers connected to the information system (See Package No 1), in the plant directors office, the chief engineers office, and the assistant chief engineers office

- Add an engineering station in the automated system group office

Environmental and Other Plant Systems

Package No 1, Environmental Upgrades

In Service Date	-	1/1998
Engineering/Procurement	-	6 months
Construction/Installation	-	6 months

This package includes the following

- Purchase of an In-situ stack monitor where a transmitter and receiver installed across the stack permit analysis of the gases passing through the stack without withdrawing a sample of the flue This device will monitor SO_2, NO_X, CO_2, CO (or O_2) and opacity simultaneously In addition, filters may be used for daily calibration instead of calibration gases A system of this type is recommended for the 300 meter stack A second monitor on one of the 180 meter stacks would also be required if the remaining 11 boilers are not redirected to the new stack

- Modern laboratory equipment will be purchased in order to update the facilities currently used by the TES-1 staff Items to be procured include a Gas Chromatograph, Atomic Absorption Spectrophotometer, and other general laboratory measuring devices It is highly encouraged that this equipment be located at the site of the State Committee of Environmental Protection, in the city of Bishkek The site is situated close to the plant, thus it is convenient for the plant personnel In addition, the equipment can be used by anyone else in Kyrgyzstan Thus, this equipment could benefit the entire country

- The Electrostatic Precipitators (ESP) will be rehabilitated Each boiler has two (2) 50% ESPs Some have 7 5 meter high plates, while others have 12 meter plates Each ESP has four fields (8 total) These units will be rehabilitated to increase the collection efficiency

Package No 2, Air Compressors

In Service Date	-	1/1998
Engineering/Procurement	-	8 months
Construction	-	5 months

This package includes the following

- Procure and install two (2) new rotary screw air compressors These new compressors will have a capacity of 100 cubic meters/minute each at an air discharge pressure of 9 kg/cm^2, and will be of the oil free type These will enhance plant operations and the pneumatic transport of boiler flyash

Package No 3, Car Dumpers

In Service Date	-	1/1998
Engineering and Design	-	4 months
Procurement	-	9 months
Construction	-	8 months

This package includes the following

- Procure and commission a new rotary car dumping mechanism in a new building adjacent to the existing coal dumping car buildings The new coal dumping car mechanism should be designed with a capacity to unload 120 ton coal cars

- Two truck weighing scales will also be installed during the installation of the new coal car dumping mechanism These scales should be used for weighing coal cars and mazut (oil) tank cars

BDHE Rehabilitation

Piping Network Rehabilitation

Package No 1, Procurement

In Service Date	-	7/1999
Engineering/Procurement	-	5 months

This package includes the following

- Delivery of pre-insulated pipe and related material including a special training package enabling local contractors to perform at the required quality

Package No 2, Installation

In Service Date	-	7/1999
Construction	-	30 months

This package includes the following

- Rehabilitation of the aerial and underground piping and insulation Approximately 12,500 meters of underground and 7,000 meters of aerial piping will be replaced Most of the aerial pipe will be reinsulated using mineral wool with reinforced concrete or with a cement composite

Pumping Station Rehabilitation

Package No 1

In Service Date	-	6/1997
Engineering/Procurement	-	4 months
Construction	-	6 months

This package includes the following

- Installation of selected pumps with frequency converters for variable speed control and a few new pumps This will allow the district heating system to operate as a variable flow system instead of the present fixed flow variable temperature operation

Automatic Control System Installation

Package No 1

In Service Date	-	6/1997
Engineering/Procurement	-	4 months
Construction	-	5 months

This package includes the following

- Installation of a computerized SCADA system will facilitate the automatic operation of the variable flow system The pumps will be regulated in accordance with the demands monitored at various critical locations in the network

Substation Rehabilitation

Package No 1, Procurement

In Service Date	-	6/1999
Engineering/Procurement	-	3 months

This package includes the following

- Delivery of equipment and devices which will transfer heat from the variable flow district heating system to the buildings These devices will include pressure control valves, strainers, heat meters, pumps, and other associated control valves

Package No 2, Installation

In Service Date	-	6/1999
Construction	-	18 months

This package includes the following

- Installation of the equipment into approximately 3200 substations In addition, 300 substations at commercial and public building will be furnished with heat meters which will act as a first step towards the introduction of consumption based tariffs

Electrical Transmission & Distribution

Ala Archa & Chuiskaia Substations

Package No 1

In Service Date	-	12/1999
Permit & Start Up	-	6 months
Engineering & Design	-	7 months
Procurement	-	14 months
Construction	-	8 months

This package includes the following

- Construction of approximately 20 km of double circuit 220 kV overhead transmission line from a new 220/110 kV substation (located at the outskirts of southwestern area of Bishkek) to the intersection of the Frunzenskaia-Bystrovka 220 kV line

- Installation of 1-125 MVA, 220/110 kV transformer and associated 220 kV and 110 kV switchgear In addition approximately 1 km of double circuit 220 kV line will be installed to integrate the existing Glavnaia-Bystrovka 220 kV line into the Chuiskaia 110 kV substation

System Protection Upgrades & Transformer Replacements/Additions

Package No 1, Substation Upgrades

In Service Date	-	12/1998
Engineering & Design	-	6 months
Procurement	-	9 months
Construction	-	18 months

This package includes the following

- System protection upgrades to twelve (12) substations in the 110 kV Bishkek system, and transformer replacement/additions at existing substations These upgrades occur at Alamdedin, Pikovaia Kotelnaia, Novo Yuzhnaia, Lenins Plant, Aini, Orto Alysh, Karagachevaia, Molodogvardeiskaia, Yuzhnaia, Promyshlennaia, Energeticheskaia, and Novo Zapadnaia substations This will reduce the fault duties on the 110 kV lines and 110 kV/lower voltage transformers at these substations that tap off the 110 kV double circuit transmission line that encircles the city of Bishkek The life of the transformer will also be extended due to less exposure to faults and reduced fault clearing times

- Replacement/addition of transformer capacity at Ort Alysh, Selectro, Novo-Troickaia and Selekccionnaia

Package No 2, Metering Devices, Tools, and Spare Parts

In Service Date	-	1/2000
Engineering & Procurement	-	4 months
Installation	-	34 months

This package includes the following

- Meter devices, tools, and spare parts will be procured for the KNEHC engineers to use in servicing and monitoring the electrical transmission and distribution facilities

2 7 OTHER PRIORITY COST ITEMS FOR TES 1

This section contains a summary of Other Priority Cost Items Other Priority Cost Items are considered highly desirable because they offer features that enhance the reliability and safety of operation These modifications may not be essential, or their need is not evident based on the present condition of the equipment, however, over a period of years inspections are likely to indicate that some modifications are needed Other Cost Items would be considered as additives to the costs of the items in Section 2 1 1

The following is a list of the Other Priority Cost Items

Boiler

- Shot cleaning system replacement for all eleven (11) boilers
- Bottom ash and slag removal equipment refurbishing for all eleven (11) boilers
- Tubular airheaters complete replacement for all eleven (11) boilers
- Pulverizer replacement for boilers Nos 14 to 24, with two (2) pressurized, double-ended tumbling wall mills complete with a PA fan for each mill, unitized construction
- Economizer tube banks and headers complete replacement for all eleven (11) boilers
- Low NO_x burners (LNB-s) of the double register type retrofit, furnace sidewalls, and horizontal firing Preference should be given to internally fuel/secondary air staged burners, without the need for using bulk furnace air staging (i e overfire air)

  Local NO_x emission limit for the year 1993 was 4336 te (Based on 858 te/yr NO plus 5280 te/yr NO_2)

  Local NO_x emission limit for the year 2005 will be 3475 te (Based on 688 te/yr NO plus 5235 te/yr NO_2)

  Therefore percent NO_x reduction required from 1993 to 2005 is 2-(3475/4336) = 0 2 i e 20% which is well achievable with LNB-s only

  (Russian formula for NO_x is 0 8NO2+0 13 NO)

- Duct systems, dampers, expansion joints and ducting structural support system refurbishing for all eleven (11) boilers

Turbine Generator

- The Unit 3 high pressure rotor should be replaced together with the No 2 bearing and the coupling connecting the HP and IP-LP rotors This should improve reliability of the unit and eliminate vibration during varying loads

- Similar replacement of components as noted above plus replacements of the HP-LP sections of Units 3 through 6 as the plant is getting to a more advanced age, beyond 2005

Other Plant Systems and Environmental Improvement

Plant Ash Storage System

The present ash storage site is expected to run out of ash storage space in the near future Allocation of funds to purchase more land for storage of ash away from the plant is required Future expansion is planned by construction of two more disposal cells (Site No 12 and 13) These new sites will have an overall capacity of 1 53 million cubic meters of ash storage and will encompass additional 17 hectares of land We recommend funds for the storage site expansion

The proposed new cells will be developed in a manner similar to the existing facility The selected site, on 58 1 hectares adjacent property, is presently unused by the owner, the collective farm The site does contain a Gas Distribution Station which must be relocated before the site can be developed Since the flow of gas to the city can not be interrupted, a new distribution station will be constructed some 3 kilometers away and, after it is placed in operation, the existing station will be dismantled and removed

Once the station has been removed, embankments will be constructed and the site prepared After grading, the site will be lined with a clay/sand mixture which prevents water penetration into the earth below the pond Monitoring of the existing site data shows no evidence of water penetration (monitoring has apparently been carried out at nearby wheat fields cultivated by the collective farm)

Water entering the ash pond is discharged via a standpipe The water is untreated, except for settling of the solids The water is discharged to a canal and is apparently used for irrigation Analysis of the discharge water dates from 1989 and additional testing is recommended The anticipated environmental impact of this development is discussed in Section 2 5

District Heating Makeup Water System

The present district heating makeup water system has a capacity of 2600 cubic meter/hour It is insufficient to meet the present district domestic water demand from the city population The new required make-up water capacity is 3900 cubic meter/hour, specially because the TES-1 plant also provides make-up water to TES-2 boiler plant and other municipal and industrial plants connected to the district heating make-up water system to 3900 cubic meters/hour

15K

Plant Instrumentation and Controls

- Calorimeter for natural gas
- Mazut flow meters for each boiler
- Mazut tank level indicating system
- O_2 analyzers
- Portable combustion analyzer (to adjust combustion) including laptop computer
- Automatic control system of forced draft fan vane positions to control O_2 content of exhaust gases
- Steam and feedwater Venturi's
- Drum level control and trip system
- New thermocouples, RTDs and wells
- Gravimetric coal flow monitors for each mill
- Primary and secondary air flow monitors
- On-line coal analyzers for moisture, ash and caloric valve

Bishkek Industrial Steam Supply System Improvements

Following Recommendations are made to improve the Industrial steam system efficiency

- At the present time, the farthest steam consumer is located 9 kilometers away from the Bishkek Plant The total industrial steam consumption has dropped to less than 25% of the peak system flow of the late eighties, and a significant number of steam customers have gone out of business permanently Some of the steam distribution lines have lost 60 to 80% of their steam customers permanently This has resulted in high condensation and heat losses

  Therefore, it is recommended to restrict the zone of industrial steam supply to a radius of 4 5 kilometers from the Bishkek plant to reduce condensation and insulation heat losses This recommendation will result in shutting off the farthest steam customers such as the meat plant, bakery and a brewery, but their steam consumption is not that significant They will have to switch to an alternate source of steam supply Restricting the zone of steam supply within 4 5 kilometers from the Bishkek plant will result in significant energy savings

- It is recommended to remove the old insulation and replace it with new mineral wool insulation, and aluminum jacketing with an appropriate black coating material for the steam and condensate lines The black coating material such as spoiled mazut should be used to discourage theft of the aluminum jacketing material These are the liens between the Bishkek Plant (TES-1) and node point No 43 on Ibraimova Street

- There are no flowmeters in the industrial steam supply lines, and very few of the customers have the flowmeters installed at their premises Therefore, it is recommended to install 8 steam flowmeters in the steam transmission lines It is also recommended to procure 40 flowmeters in various sizes (50 mm to 200 mm pipe diameters) and provide them to the steam consumer This will help in proper accountability of steam consumption by customers, and help conserve the thermal energy Installation of permanent flowmeters, and pressure and temperature gauges will also help in detection and monitoring of the heat losses and early repairs of the leaks and bad insulation thus conserving thermal energy

- It is recommended to replace leaking sections of the existing 500 mm diameter industrial steam supply line and a 200 mm diameter condensate return line between the node points No 43 and No 64 These two lines are approximately 2 7 kilometers in length (each line) These existing lines were built in 1968, and develop frequent leaks resulting in wasted energy

These Other Priority Costs Items are for the TES-1 plant only A description of the associated ET&D Other Priority Cost Items can be found in Section 4 Table 2-33 shows a summary of the cost for other priority items presented in this section

TABLE 2-33

Bishkek TES 1 Other Priority Cost Items

(All Costs are in USD)

Cost Item	Description	Direct Costs
Rehabilitation of BKZ 220-110 Boilers	• Purchase and installation of 8 US made size D 8-F double ended pressurized ball mills (to replace the existing 12 hammer mills) with 4 additional raw coal silos and 8 PC/NG Mazut swirl type burners on Boilers No 21 to 24 • Refurbishment of bottom ash and slag removal equipment on Boilers No 14 to 24 • Refurbishment of air and fluegas ducting system dampers expansion joints and ducting structural supports/hangers on boilers No 14 and 24 • Purchase and installation of 66 low NO burners of the double register type (no overfire air) on Boilers No 14 to 24 • Purchase and installation of acoustic horn low frequency infrasound sootcleaning equipment for the economizer and tubular airheater stages in the convective fluegas pass of Boilers No 14 to 24 • Furnace and convective pass roof superheater tubing removal/replacing (approx 15% of roof tubes per boiler) for Boilers No 14 and 20 • Economizer tube bank replacement (two stages) with extended heating surfaces finned tube in-line arrangement and inlet and outlet headers for boilers No 14 to 24 • Tubular airheater replacement (four stages) along with inlet and outlet tube plates for boilers No 14 to 24	$46,678,000
Turbine/Generator	• Replace HP Rotor and Coupling on T/G #3	$850,000
Instrumentation & Controls Upgrades	• Purchase and installation of O_2 analyzers mazut flow meters mazut tank level indicators calorimeter for natural gas portable combustion analyzer and a on-line coal analyzer for moisture ash and caloric value	$2,000,000
Other Plant Systems	• Expansion of District Heating Water Makeup System	$1,300,000
Industrial Steam System	• Replacement of pipe insulation • Installation of flow meters • Replacement of piping section (steam and condensate	$1,506,000
Environmental Upgrades	• Refurbishment of the electrostatic precipitators on all eleven BZK 220-100 Boilers • Purchase and installation of fluegas ducting to connect the last two BZK 220-100 Boilers and seven BZK 160-100 Boilers to the new 300 meter stack • Expansion of the Current Ash Storage System	$9,000,000
	TOTAL	**$61,334,000**

151

3 0 Description and Technical Evaluation of Existing Bishkek Thermal Electric Station (TES) and Bishkek District Heating Enterprise (BDHE) System

3 1 TES and BDHE Systems

3 1 1 Background

The construction of the Bishkek Thermal Electric Station (TES) began in 1958 The plant is designed to supply both electric power and heat for the City of Bishkek The first stage of construction consisted of two (2) turbine-generators with a power output of 25 MWe each and three (3) steam generators (boilers) with a steam output of 160 tons/hour each

In 1960, the second phase of the plant construction began which included increasing the electrical capacity of the TES to 200 MWe The third stage of construction began in 1962, in this stage the electric power output of the station was doubled Due to large scale construction of electrical networks in western Kyrghyzstan, the annual increase in electrical power demand was 15 to 17% The fourth stage of construction was started in 1969 and was completed in 1973 The electrical capacity of the TES was increased to 700 MWe during this phase of plant expansion

The third and fourth stages of construction mainly dealt with increasing the electrical output of the station In the third and fourth stages of construction less attention was given to the heat production capacity of the station This created a shortage in providing heat to new and existing housing To solve this problem the plant turbine-generators were later modified to provide more steam for heating and less for electricity These actions increased the heat production capacity of the plant by 410 Gcal/hour, while reducing the electric capacity by 28 MWe

Further growth in heat consumption required a fifth stage of construction which began in 1981 In this stage four (4) new boilers were placed into service They were put into service from 1984 through 1989 In addition, a new 300 meter high chimney was constructed Installation of the fluegas duct systems for transferring all of the boiler discharges to the new chimney is in progress At the present time the TES has an electric capacity of 609 MWe, and a heat capacity of 1817 Gcal/hour There are twenty-four (24) boilers and three (3) natural gas fired hot water peaking boilers The total steam output for all the boilers is 4250 tons/hour The station has ten (10) steam turbine-generators which produce the 609 MWe electric power There are approximately 1550 people working at the TES

Fuels

The main boilers at the TES are coal fired They use coal from two sources These are the Karaganda basin from the Kazakhstan mines (with a design ash content of 31%) and the indigenous Kyrghyz mines (with a design ash content of 21% Mazut (No 6 oil) is used for

initial startup of the boilers Starting in 1969 natural gas began to be fired since there is usually a seasonal surplus of the gas All of the TES boilers are equipped to fire natural gas at full load

In the last 10 to 15 years the quality of the coals being fired at the station has sharply decreased At the present time the ash content of the coal can reach as high as 40 to 45% This lower quality of coal results in slagging of the heating surfaces of the boilers, erratic thermal performance of the boilers, and an increase in air pollution Coal used in the fuel mix has been increasing in recent years In the last two years the breakdown of fuel fired at the TES was

	Year	
	1993	1994
Coal	46 5%	63 4%
Natural Gas	49 6%	31 7%
Oil	3 9%	4 9%

Coal continues to be the primary fuel fired at the plant

Composition of the coals fired at the plant can be summarized as follows

Coal Source	Karaganda Coal	Tash-Kumur Coal
Composition , wt%		
Carbon	28 2	23 0
Hydrogen	1 8	1 6
Nitrogen	0 5	0 4
Oxygen	3 5	6 0
Sulfur	0 5	0 4
Ash	47 5	48 3
Moisture	18 0	20 2
LHV, kcal/kg	4,223	2,955

TES Site Layout

The TES plant complex consists of the main building along with coal unloading facilities and coal piles, oil storage facilities, open air electrical distribution gear (35, 110, and 220 kV), electrical switchgear units, water treatment building, and an ash transportation and depositing building

The main building has the basic dimensions of 19 2 meters high, 558 meters long, and 30 meters wide Both the main boilers and turbine-generators are located in the main building

Fuel Handling Facilities

The main fuel used at the TES is coal The coal arrives at the plant in railroad cars The coal is then weighed and unloaded by two rotary railroad car dumpers and a system of conveyors to the open coal piles Alternatively, the coal is transported to hammer type crushers via conveyors before it travels to the coal bunkers of the boilers The coal pile has a maximum capacity of 420,000 tons Stock piling of coal in the coal piles and coal delivery to the conveyor feed hoppers is done with bulldozers The unloading of frozen coal is accomplished with the use heating equipment on the railroad cars and hammer cutter equipment installed over the receiving bunkers of the rotary car dumpers

In addition, there are nine (9) oil tanks on the plant grounds These tanks have a total storage capacity of 35,000 m^3 Along with the oil tanks, there are oil pumping stations and two draining trestles for the railroad cars

Electrical Components

Electrical components that are located on the plant grounds include the electric switchgears, storage batteries, communication unit, and an electro-technical laboratory The electric switchgears control different turbine and boiler auxiliaries that are located in the main building The switchgears are also connected to the network transmission system (electric power grid) The system has operating voltages of 220, 110, and 35 kilo volts (kV)

Water Supply and Treatment

The water for the TES is supplied by two canals with the help of pumping stations The canals can deliver a maximum of 33 m^3/sec of water The main pumping stations have a total of 13 circulation pumps with a total capacity of 117,500 m^3/hour Delivery of water to the turbine condensers is through steel pipes with diameters of 1000, 1400, and 2000 mm

The water used in the turbine condensers is partially reused for purification and boiler make-up, transporting of solid fuel wastes, fire fighting, and domestic needs The remaining water is discharged back to the canals via concrete pipes

A water treatment facility is also located on the plant grounds The boiler make-up water is treated with mechanical filters and various other chemicals Water treatment for both the power plant and district heating water is performed at this facility Total output capacity of the facility is 3415 tons/hour

Pollution Control and Ash Disposal

Each of the thirteen BKZ 160-100 boilers is equipped with venturi wet-scrubbing systems while each of the eleven BKZ 220-100 boilers is equipped with electrofilters (electrostatic precipitators) Average particulate collection efficiency is 95-96% No equipment is provided for either SO_2 or NO_x emission control

At present, fly ash and bottom ash from all the boilers is collected, and pumped to the ash disposal area Six (6) pumps, each with two (2) discharge pipes, feed a manifold which directs the flow to any of five (5) ash transfer pipes These pipes carry the ash to the ash disposal area where the ash is deposited in a pond The ash settles in the pond and the water is decanted and discharged from the pond The ash disposal area consists of a number of cells and when the ash deposited in each cell reaches the design level (height), the cell is closed and the deposited ash is covered with soil and reclaimed

The ash disposal area is located 3 5 kilometers north of the plant The plant has an agreement with the collective farm which apparently owns the property As the land is reclaimed it is returned to the collective farm which may use it for "agricultural purposes"

The ash disposal area has been developed as series of traditional ash disposal ponds (cells) The present site consists of eleven "cells" occupying a total of 117 1 hectares Earth embankments are constructed to contain the disposal pond and a water decanting (overflow) piping system is provided

The ash transfer discharge piping is relocated, as required, to allow the ash to deposit uniformly on the bottom of the pond As ash is accumulated, and the pond begins to fill with solids, the height of the water standpipe is raised Eventually the ash accumulates to the design height, nearly the height of the embankment, and a new pond area (cell is opened the filled cell is closed by covering the ash with a layer of soil The closed cells form a plateau, surrounded by the embankment Grasses planted in the soil prevent dusting

Technical Data

From the initial operation of the plant on September 14, 1961, the TES has produced more than 87 6 billion kW-hours, and delivered more than 90 2 million Gcal of heat to customers

The following data is for the year ending December 1993

Electricity Production	1895 7 Million kW-hours
Heat Production	3,386 4 Thousands Gcal
Maximum Electrical Load	430 MWe

Fuel Consumption

For Electrical Energy	284 gram / kW-hour
For Heating Energy	178 7 kg / Gcal

Consumption of Electrical Energy for House Load

For Production of Electricity	7 88%
For Production of Heat	31 3 kW-hour/Gcal

TES Working Capacity at the end of 1993 = 498 MWe

3 1 2 Bishkek District Heating System

The district heating system was formed in the early 1960's, when the Bishkek Thermal-Electrical Station (TES) was placed into operation At that time, the construction and operation of the district heating system was planned

In the beginning, the district heating system had a line operation consisting of 0 4 km of heating network piping with a 3 3 Gcal/hour heat load Before 1962, the steam supply line was used for only the Worsted-Wool factory The utility had an estimated heating capacity for 188 building units, an average of 8 staff, and a yearly heating supply of 12,300 Gcal In October 1963, the district heating system was formed, and the utility company was created

The first Bishkek heating pipeline from the Thermal Electric Station was constructed by the Heating 'Electric' Project Institute (Tashkent City), which was a branch of the All-Union Institute In response to the city development from 1962 to 1964, 9 5 km of steam lines (500 mm diameter) and 4 3 km of hotwater lines were connected to supply the western part of the city with heat and hot water Later on it was determined that the general building design plan for the city needed more detailed work for the heating network supply Therefore in 1964, the general development plan was revised, for the planned construction period of 1965-1970 Completion of this program allowed the supply of energy for the west and south-west city districts

In 1965, the government made the decision to include other parts of the city into the district heating system It was permitted to shutdown inefficient boilers in the city During the years of the district heating development, some 300 various boilers were shutdown The Utility now served four city districts with heating networks In 1968, the length of the heating networks was 140 km, including 25 km of steam lines, 40 km of transmission lines, and 75 km of distribution lines

On September 27, 1968, the district utility was renamed the Utility of Heating Networks This network consisted of two district services, repair services and services of adjustment

162

and testing District heating system expansion plans were made for the periods of 1971 to 1982, 1982 to 1995, and up to 2000 and forecasts were made for determining heating supply

The district heating network hot water temperature is maintained through a dispatch service The repair of the heating networks is executed by the repair service, while the operation of measurement facilities is conducted by the services of adjustment and testing The heating energy installation and inspection of the consumers is made by the Department of Inspection and Installations To improve the efficiency of load management, a computer control system was introduced in 1989 The Computer Control Room employs 28 people

The Bishkek district heating system is designed and constructed to meet the city of Bishkek needs for space (comfort) heating and domestic hot water The Bishkek district heating system (DHS) has 400 kilometers of existing piping ranging in size from 1000 mm diameter main headers to 57 mm branch pipes, and it serves approximately 60 percent of the current population of the city of Bishkek The district hotwater flow rates from the Combined Heat and Power (CHP) plant are 17,000 and 4,000 cubic meters per hour respectively for winter and summer months The system design and operating pressures are 25 atmospheres and 16 atmospheres respectively The district hotwater supply temperature on a design coldest day (-23°C) should be 150°C according to the system design documents This temperature is varied based on outdoor (ambient) air temperature

The system average make-up water flow rate is 4,000 cubic meters/hour The make-up storage capacity at the CHP plant is 20,000 cubic meters, and the make-up water is stored in 3 tanks The hotwater district heating system has 15 winter pumps running at 1250 m^3/hr capacity each during the winter season, whereas in summer months, it has 4 summer pumps running at 1,000 m^3/hr each pump capacity The hotwater system has a total of 17 booster pump stations located strategically throughout the city to boost the system pressure The hotwater flow rates at these stations vary from 200-500 m^3/hr for a small station to 3,000 m^3/hr for a larger station

In addition to the hotwater distribution, the district heating system also provides steam to various industries at the rate of 300-350 tons/hr for manufacturing processes The process steam to industry is supplied at 12 bars pressure and 250°C The steam was supplied to approximately 80 different industries including food plants, a pharmaceutical company, and a wool mill Due to economic slowdown, the industrial steam production has dropped to 25 percent of the full capacity to less than 100 tons/hr at the present time

3 2 Condition Assessment of Existing TES and DH System Components and Their Performance Evaluation

3 2 1 Assessment of Steam Boilers and their Auxiliaries

Thermal Performance and Equipment Descriptions

(a) *BKZ 160-100 Boilers Description*

TABLE 3-1
Thermal Performance Design/Current

Parameter	Units	Design	Current
Main Steam Flowrate	tons/hour	160	120-140
Superheated Steam Pressure	kgf/cm^2	100	90-100
Superheated Steam Temperature	°C	540	525-540
Feedwater Temperature to Economizer	°C	215	160-230
Combustion Air Temperature to Airheater	°C	30	30-40
Combustion Air Temperature lvg Airheater	°C	270	220-250
Fluegas Temperature leaving Airheater	°C	135	138-170
XS Air in Fluegas at Entry to Conv Pass	%	25	30-40
XS Air in Fluegas leaving Airheater	%	35	42-55
XS Air in Fluegas leaving ID Fan	%	40	52-65
Boiler Efficiency LHV basis	%	91 8	83-89

The thirteen (13) BKZ 160-100 boilers of the TES #1 Bishkek are nearly identical Each boiler is of the natural circulation drum type, with a radiant, balanced draft and dry bottom furnace The boiler configuration is of the conventional two-pass, with a furnace arch, a short horizontal convection pass, and a vertical rear-pass The boiler manufacturer was the Sibenergomash Boiler Works, Barnaul The boilers were designed for operation in a combined heat and power (CHP) plant, fired with pulverized bituminous coal from the Karaganda Kazakstan basin and 100% of full load natural gas (NG) firing Mazut is the auxiliary fuel for start-up and combustion stabilization, having 30% of full load heat input capacity The furnace is rectangular, 7104 mm wide and 6592 mm deep It consists of fully

164

water cooled carbon steel tubewalls, 60 mm OD x 4 mm thick tubes on 64 mm centers The furnace along with the horizontal and rear convective passes rooftubes are steam cooled, 38 mm OD x 4 mm thick carbon steel tubes on 45 mm centers The vertical furnace tubewalls as well as the horizontal rooftubes have coldside refractory fill with sheetmetal backing, an insulation layer and a metal casing The small bore downcomers are embedded in the vertical furnace wall insulation layer

The furnace along with the horizontal short convective pass and the top portion of the rear convective pass are top supported The lower portion of the rear convection pass is bottom supported A metallic expansion joint is installed between the top and lower portions of the rear convective pass so as to accommodate thermal expansion The horizontal short convective pass sidewalls and floor, the rear convective pass top portion front, rear and sidewalls are refractory brick lined The lower portion of the rear convective pass is of metal cased construction

The furnace is tangentially fired, producing a single flame envelop The direct firing system fuel/air injectors (burners) are positioned in the furnace sidewalls, each sidewall has two (2) pulverized coal/primary air injection ports with the secondary air injection ports positioned above and below each coal injector port

The superheater heating surfaces can be divided into three(3) parts radiant, radiant/convective and convective The radiant primary superheater (SH) consists of rooftubes together with a pendant tube bank formed from the rooftubes and positioned at the exit of the short horizontal convective pass The radiant/convective secondary pendant SH is situated above the furnace arch The tertiary pendant SH is positioned in-between the primary and secondary pendant tube banks Steamflow is divided into two parallel paths, with steam crossovers at the first and second spray attemperator stages

Superheated steam final temperature control is by spray attemperation Drum saturated steam is condensed by feedwater from the first stage economizer waterside outlet in coil type condensers, and then injected into the spray nozzles of the first and second stage attemperators

The economizer (first and second stage) consists of horizontal fully drainable tube banks, constructed with bare tubes, staggered tube arrangement, water upflow, and fluegas in downflow Both economizer stages are positioned in the vertical rear convective pass

The tubular airheater is also positioned in the vertical rear convective pass, with fluegas in tubes in downflow and combustion air in upflow/crossflow The airheater has a staggered tube arrangement Cold end corrosion protection of the airheater is by hot air recirculation into the FD fan suction side

165

Heating surfaces cleaning equipment consists of 18 furnace wall blowers, 6 retractable sootblowers for the pendant SH tube banks and a shot-clean system for the economizer and tubular airheater tube banks situated in the rear vertical convective pass

The Bottom Ash Handling System consists of a refractory brick lined dry ash hopper supported on the basement floor and an ash crusher with drive The Draft Plant consists of two forced and two induced draft (FD & ID) Fans per boiler with an electric motor drive and radial inlet vane control All draft plant fans are radial flow, centrifugal type

Each boiler is supplied with raw coal from two silos, through two volumetric raw coal feeders In addition, each boiler has two (2) type MBC-140, medium speed, vertical spindle, flat table/roller mills installed The mill design is based on the Loesche (German) make, but with only two rolls per flat table instead of three as in the German mill design The mills operate with subatmospheric pressure and have integral stationary centrifugal classifiers with a single outlet to the radial flow centrifugal type exhauster fan The exhauster fan conveys the primary air/pulverized coal (PA/PC) mixture to a single level of the four per furnace tangentially fired coal nozzles

(b) *BKZ 220-100 Boilers Description*

TABLE 3-2
Thermal Performance Design/Current

Parameter	Units	Design	Current
Main Steam Flowrate	tons/hour	220	190-220
Superheated Steam Pressure	kgf/cm^2	100	90-100
Superheated Steam Temperature	°C	540	520-540
Feedwater Temperature to Economizer	°C	215	160-235
Combustion Air Temperature to Airheater	°C	45	30-45
Combustion Air Temperature lvg Airheater	°C	370	320-350
Fluegas Temperature leaving Airheater	°C	140	140-160
XS Air in Fluegas at Entry to Conv Pass	%	25	30-40
XS Air in Fluegas leaving Airheater	%	35	40-60
XS Air in Fluegas leaving ID Fan	%	45	55-70
Boiler Efficiency LHV basis	%	90 0	85-90

The eleven (11) BKZ 220-100 boilers of TES #1 Bishkek are also nearly identical Each boiler is of the natural circulation drum type with a radiant, balanced draft and dry bottom furnace The boiler configuration is of the conventional two-pass with a furnace arch, a short horizontal convection pass, and a vertical rear-pass The boiler manufacturer was the Sibenergomash Boiler Works, Barnaul The boilers were designed for operation in a combined heat and power (CHP) plant, fired with pulverized bituminous coal from Karaganda Kazakstan as well as indigenous lignites and 100% of full load natural gas (NG) firing Mazut is the auxiliary fuel for start-up and combustion stabilization, having 30% of full load heat input capacity The furnace is rectangular, 9536 mm wide and 6656 mm deep It consists of fully water cooled carbon steel tubewalls, 60 mm OD x 4 mm thick tubes on 64 mm centers The furnaces horizontal and rear convective passes rooftubes are steam cooled, 38 mm OD x 4 mm thick carbon steel tubes on 45 mm centers The vertical furnace tubewalls as well as the horizontal rooftubes have coldside refractory fill with sheetmetal backing, an insulation layer and a metal casing The small bore downcomers are embedded in the vertical furnace wall insulation layer

The furnace along with the horizontal short convective pass and the top portion of the rear convective pass are top supported The lower portion of the rear convection pass is bottom supported A metallic expansion joint is installed between the top and lower portions of the rear convective pass, so as to accommodate thermal expansion

The horizontal short convective pass sidewalls and floor, the rear convective pass top portion front, rear and sidewalls are refractory brick lined The lower portion of the rear convective pass is refractory brick lined with a metal casing

The furnace is horizontal wall fired, producing multi flame envelops The direct firing system swirl type circular burners are positioned in the furnace sidewalls, each sidewall having three (3) pulverized coal/NG burners with the Mazut guns in the center of the burner

The superheater heating surfaces can be divided into three(3) parts radiant, radiant/convective and convective The radiant primary superheater (SH) consists of rooftubes, together with a pendant tube bank formed from the rooftubes and positioned at the exit of the short horizontal convective pass The radiant/convective secondary pendant SH is situated above the furnace arch The tertiary pendant SH is positioned in-between the primary and secondary pendant tube banks Steamflow is divided into two parallel paths, with steam crossovers at the first and second spray attemperator stages

Superheated steam final temperature control is by spray attemperation Drum saturated steam is condensed by feedwater from the first stage economizer waterside outlet in coil type condensers and then injected into the spray nozzles of the first and second stage attemperators

The economizer (first and second stage) consists of horizontal, fully drainable tube banks constructed with bare tubes, staggered tube arrangement, water upflow, and fluegas in downflow Both economizer stages are positioned in the vertical rear convective pass

The tubular airheater is also positioned in the vertical rear convective pass, with fluegas in tubes in downflow and combustion air in upflow/crossflow The airheater has a staggered tube arrangement Cold end corrosion protection of the airheater is by hot air recirculation into the FD fan suction side

Heating surfaces cleaning equipment consists of 18 furnace wall blowers, 6 retractable sootblowers for the pendant SH tube banks and a shot-clean system for the economizer and tubular airheater tube banks situated in the rear vertical convective pass

The Bottom Ash Handling System consists of a refractory brick lined dry ash hopper supported on the furnace tube wall together with a water impounded bottom supported hopper that provides the seal to prevent unmeasured air ingress into the lower furnace A screw type conveyor (electric motor driver) conveys wet ash to an ash crusher with drive

The Draft Plant consists of two forced and two induced draft (FD &ID) Fans per boiler with an electric motor drive and radial inlet vane control All draft plant fans are radial flow, centrifugal type

Each boiler is supplied with raw coal from three (3) silos, through (3) three volumetric raw coal feeders In addition, each boiler has three (3) type MMT or MMA high speed hammer mills installed The mill design is similar to the Deutsche Babcock GS or HS type The mills operate with positive pressure and have integral stationary centrifugal classifiers with two outlets each to the swirl burners positioned in the furnace sidewalls Each boiler has two (2) "hot" PA fans supplied from the tubular AH air side outlet ducts The fans are radial flow, centrifugal type with electric motor drive, radial vane control and discharge into a hot PA busmain from which take-off ducts supply the three (3) hammer mills Cold tempering air to each hammer mill is supplied from the FD fan discharge ducts

(c) *BKZ 160-100 Boilers Assessment*

All thirteen (13) boilers have been in operation for more than 10^5 hours and the first six (6) boilers have been in operation for more than 2×10^5 hours

Thick Walled Pressure Parts

Steam/Water Drums Normal Non-Destructive Examination (NDE) practice is to check for low-cycle fatigue on the drum inside diameter (ID) The inspection sites for these examinations are the accessible longitudinal and girth welds, large bore nozzle junctions (e g downcomer and feedwater) and manway door counterbores NDE methods commonly used are visual,

162

magnetic particle (wet fluorescent) and shearwave ultrasonic The metallurgy laboratory of the TES does regular checks So far, no crack type failures have been reported

Attemperators Spray attemperators operate by adding high purity water through spray nozzles into the superheated steam integral pipeline The spraywater then vaporizes and mixes with the superheated steam, thus cooling it and controlling the superheated steam temperature Due to the large temperature difference between the spraywater and superheated steam (up to 250 °C) , the spray nozzle heads and pipeline thermal liners receive a large thermal shock each time the attemperator is used Over the course of extended operating periods, the effect of the accumulated thermal shocks are substantial, causing attemperator failures due to thermal fatigue Each year spray water attemperators failures are one of the three (3) main causes of major extended forced outages in the US electric utility industry Such forced outages can be dramatically reduced by employing a regularly scheduled inspection / replacement program for spray attemperators Again, the metallurgy lab personnel carry out regular checks of the attemperators Piping cracks have not been found, and other components are repaired as part of the routine maintenance

Finishing Superheater Outlet Headers and Boiler Stop Valves NDE methods to be used to detect low cycle fatigue damage of the high temperature headers and valves are visual (Bore hole endoscopy with video recording, also all accessible and exposed external header surfaces including tube socket-welds) and magnetic particle (wet fluorescent) These examinations should be performed on selected tube socket welds in addition to girth and longitudinal welds (unless the header is fabricated from seamless pipe) External surfaces radiography, for the detection of cracks and the inspection or repair welds, can also be used Initially, creeplife usage checking is by surface replication While the metallurgy lab could carry out some visual checks for the detection of low cycle fatigue damage, the creeplife usage checking should be done by an external organization

Economizer Inlet Headers These low temperature headers receive feedwater for preheating in the economizer tube banks The headers are subjected to a large number of severe thermal shocks during cycling operations (such as boilers of a combined heat/power plant) These shocks occur during startup following an overnight or week-end shutdown The water in the economizer inlet header is approximately at the saturation temperature of the steam/water drum It is then intermittently mixed with feedwater, which normally ranges from between 38 and 150 °C This addition of cold feedwater to the inlet header can cause large temperature differentials between the ID and OD of the header Created each time feedwater enters, such temperature differentials

169

eventually cause thermal fatigue cracking in the header and/or the tube stubs The TES metallurgy lab has not checked any of the economizer inlet headers due to a lack of equipment availability in Kyrgyzstan As a minimum, one header should have been inspected by bore hole endoscopy (i e fiber optic visual), since this is the only practical method The examination sites should have been the header ID ligaments fields as well as along the header bores and tube stubs Results of such an examination could have been indicative of past plant operating practices during off-line and during start ups

Other Furnace Waterwall and Superheater Headers No reported/known low cycle fatigue failures

Boiler Integral and Circulation System Piping No reported/known low cycle fatigue failures

Other Parts and Systems

Furnace Tubing The tubing's external cold side low temperature corrosion damage is understood to be due to the breakdown, over large surface areas, of the furnace metal casing, insulation, metal backing plates and refractory fill on the tube shaded side Fireside external surface corrosion has also been reported, this is mainly due to the deteriorating coal quality, increased tubewall slag type deposits, and insufficient operation of the furnace wall blowers

Superheater Tubing The furnace and convective pass roof tubing's external cold side low temperature corrosion is postulated to be due to the same reason as for the furnace wall tubes, i e breakdown of tube casing and refractory/insulation A fifteen (15) percent roof tube replacement of each boiler is estimated to be necessary The finishing tertiary superheater tube elements of the first six (6) boilers, with an operating period of more than 2 x 10^5 hours, are assumed to have consumed their full creeplife and will need to be replaced

Economizer Tube Bank Upgrade The existing economizer tube banks consist of plain tubes in a staggered tube arrangement The tubes are 32 mm OD x 4 mm thick, and spacing across/with the gas flow is 75/50 mm Clearly tube spacing is considered inadequate, especially in the light of the inadequate shot type cleaning equipment Burns and Roe will propose replacement tube banks of the extended heating surface (finned tubes) type, with an in line tube arrangement The type of extended heating surface shall be suitable for pulverized high ash content coal fired boilers and for the existing shot type cleaning equipment

170

Tubular Main Airheater Tube banks Upgrade The existing main airheater tube banks are 40 mm OD x 4 mm thick tubes They are in a staggered tube arrangement in counterflow with the fluegas in the tubes in down flow, and air over the tubes in crossflow The tube spacing across the combustion airflow is 34/33 5 mm and 45 mm with the airflow Tube diameters as well as the tube spacing across the airflow are considered inadequate for fluegas from pulverized coal firing and for the installed shot type heating surface cleaning equipment Burns and Roe helped propose replacement tube banks with outside tube diameters, tube thicknesses and tube spacing to western vendors' standards The following specification should be used in the upgrade of the airheater tubes The minimum tube OD should be 51 mm, The minimum tube spacing across the airflow should be 51 mm, The minimum tube spacing with airflow should be 66 7 mm

Firing System (Pulverizer Coal Silo, Feeder, Pulverizer, Exhauster Fan and Burners) The silos have a square cross section with an epoxy resin coating, a tapered circular cross section bottom funnel, with a 60° angle to the horizontal, an outlet opening of 800 mm diameter and a sloping raw coal conduit to volumetric raw coal feeder The plant personnel have reported raw coal hang-ups and rat-holing in the silos along with mechanical problems with the volumetric type feeders The medium speed, vertical spindle, flat table / two (2) Rolls per table mills are the major bottleneck to the restoring of full steaming capacity of the boilers for the following reasons (a) The boilers have no standby pulverizers, both mills are required to operate at full load (b) Each pulverizer has only two (2) rolls instead of three (3) rolls as for the (original) Loesche Mill design (c) Lack of adjustment flexibility for the roll tensioning springs (d) Mill grinding capacity is insufficient for the low grade coal now fired (e) Mill drying capacity is insufficient for the low grade coal, i e too low classifier exit PA/PC mixture temperature results in conduit blockages and insufficient exhaust fan performance (f) Insufficient mill housing air tightness resulting in large quantities of unmeasured ambient air ingress which further aggravates the deficient exhaust fan performance (g) lack of mill spare parts (h) Inferior mill layout resulting in difficulty of mill repairs due to lack of easy accessibility (i) Exhaust fan mechanical problems, i e high wear rates of impellers and housing (j) Uncontrollable coal spillages together with the pyrites rejection

The installed single flame envelop, tangential fuel/air injection nozzles have been modified by TES personnel The modified system is designed to produce three (3) concentric firing circles with bulk air staging This system is somewhat similar in principle to the ABB-Combustion Engineering Low NO_X Concentric Firing System The fuel/air injection nozzles of the BKZ 160-100 boilers are non-tilting and no yaw adjustment of the secondary air injection nozzles is provided for The burner system has no ignitors and no flame

17'

scanners, ignition is by natural gas main fuel injectors, flame scanning is visual only through flame observation ports No mechanical (e g injection nozzles erosion, high temperature metal oxidation) problems were reported

Heating Surfaces Cleaning Equipment It is understood that the installed furnace wall blowers and retractable sootlances for the superheater pendant elements are operational Due to the substantially increased ash content of the coal presently fired however, they are unlikely to provide satisfactory degrees of heating surface cleanness Burns and Roe considers a practical solution to this operating problem to be an improvement of coal quality, not an increased number of sootblowers (wall or retractable) installed Increasing the frequency of sootblowing cycles per each shift may become another solution when the full load steam output capacity of the boiler has been restored According to the TES operating staff, the rear convective pass shot cleaning systems of all boilers are inoperative Maintaining the economizer and tubular airheater with clean heating surfaces is an important operating requirement The elimination of the existing shotclean system and the retrofitting of retractable or rotating stationary sootlances is not feasible due to lack of space availability (except for the top economizer tube bank)

Boiler Refractory, Insulation, Lagging, Casing (BRILC) and Tube Penetration Seals A major operating problem of the boilers is the increased ingress of unmeasured ambient (false) air, which is due to the deteriorated condition of BRILC, roof tubes tube penetration seals, and the bottom ash hopper seals This ambient air in-leakage increases fluegas velocities and reduces boiler efficiency (it increases pressure parts erosion wear, combustibles loss, furnace radiation losses, and furnace tubes cold side low temperature corrosion attacks) Thus, it should be minimized on all boilers

Bottom Ash & Slag Removal Equipment The refractory lining of the dry ash hoppers requires refurbishing It is understood that the ash crushers / drivers lack spare parts The ash hopper hydraulic (water trough) seals need to be refurbished so as to eliminate the false air ingress into the furnace

Draft Plant The forced draft (FD) and induced draft (ID) fans mechanical components and electric motor drives are in a reasonably good condition, only routine maintenance is required The ID fans housing insulation should however be refurbished The ID fans flow capacity limitation should be eliminated once the ambient unmeasured air ingress into the furnace/boiler has been minimized In addition, the ID fans housing low temperature corrosion, erosion wear requires routine maintenance

Air and Fluegas Duct Systems, Dampers, Expansion Joints and Structural Supports Low temperature corrosion attack and flyash erosion wear are the

operating problems of the fluegas ducting There are no indications from the TES operating staff of major problems with the expansion joints, dampers, or duct systems structural supports Thermal insulation of the fluegas and hot combustion air duct systems are in need of refurbishing The hot combustion air recirculation duct system (for tubular airheater cold end low temperature corrosion protection) is operative and should be refurbished so that it can automatically maintain the airheater cold end minimum metal temperature

(d) *BKZ 220-100 Boilers Assessment*

All eleven (11) boilers have been in operation for less than 10^5 hours Usually, all of the boilers are in standby and only operate during the winter heating season The boiler replacement/refurbishment effort will be limited to the eleven (11) BKZ 220-110 boilers

Thick Walled Pressure Parts

Steam/Water Drums Normal Non-Destructive Examination (NDE) practice is to check for low-cycle fatigue on the drum inside diameter (ID) The inspection sites for these examinations are the accessible longitudinal and girth welds, large bore nozzle junctions (e g downcomer and feedwater) and manway door counterbores NDE methods commonly used are visual, magnetic particle (wet fluorescent) and shearwave ultrasonic The metallurgy laboratory of the TES does regular checks So far, no crack type failures have been reported

Attemperators Spray attemperators operate by adding high purity water through spray nozzles into the superheated steam integral pipeline The spraywater then vaporizes and mixes with the superheated steam, thus cooling it and controlling the superheated steam temperature Due to the large temperature difference between the spraywater and superheated steam (up to 250 °C) , the spray nozzle heads and pipeline thermal liners receive a large thermal shock each time the attemperator is used Over the course of extended operating periods, the effect of the accumulated thermal shocks are substantial, causing attemperator failures due to thermal fatigue Each year spray water attemperators failures are one of the three (3) main causes of major extended forced outages in the US electric utility industry Such forced outages can be dramatically reduced by employing a regularly scheduled inspection / replacement program for spray attemperators Again, the metallurgy lab personnel carry out regular checks of the attemperators Piping cracks have not been found, and other components are repaired as part of the routine maintenance

Finishing Superheater Outlet Headers and Boiler Stop Valves NDE methods to be used to detect low cycle fatigue damage of the high temperature

headers and valves are visual (Bore hole endoscopy with video recording, also all accessible and exposed external header surfaces including tube socket-welds) and magnetic particle (wet fluorescent) These examinations should be performed on selected tube socket welds in addition to girth and longitudinal welds (unless the header is fabricated from seamless pipe) External surfaces radiography, for the detection of cracks and the inspection or repair welds, can also be used Initially, creeplife usage checking is by surface replication While the metallurgy lab could carry out some visual checks for the detection of low cycle fatigue damage, the creeplife usage checking should be done by an external organization

Economizer Inlet Headers These low temperature headers receive feedwater for preheating in the economizer tube banks The headers are subjected to a large number of severe thermal shocks during cycling operations (such as boilers of a combined heat/power plant) These shocks occur during startup following an overnight or week-end shutdown The water in the economizer inlet header is approximately at the saturation temperature of the steam/water drum It is then intermittently mixed with feedwater, which normally ranges from between 38 and 150 °C This addition of cold feedwater to the inlet header can cause large temperature differentials between the ID and OD of the header Created each time feedwater enters, such temperature differentials eventually cause thermal fatigue cracking in the header and/or the tube stubs The TES metallurgy lab has not checked any of the economizer inlet headers due to a lack of equipment availability in Kyrgyzstan As a minimum, one header should have been inspected by bore hole endoscopy (i e fiber optic visual), since this is the only practical method The examination sites should have been the header ID ligaments fields as well as along the header bores and tube stubs Results of such an examination could have been indicative of past plant operating practices during off-line and during start ups In our cost estimates we will allow for the replacement of the complete economizer tube banks including inlet and outlet headers of all eleven (11) boilers

Other Furnace Waterwall and Superheater Headers No reported/known low cycle fatigue failures

Boiler Integral and Circulation System Piping No reported/known low cycle fatigue failures

Other Parts and Systems

Furnace Tubing The tubing's external cold side low temperature corrosion damage is understood to be due to the breakdown, over large surface areas, of the furnace metal casing, insulation, metal backing plates and refractory fill on the tube shaded side Fireside external surface corrosion has also been

174

reported, this is mainly due to the deteriorating coal quality, increased tubewall slag type deposits, and insufficient operation of the furnace wall blowers In our cost estimates we will provide an allowance for the replacement of fifteen (15) percent of the furnace tubing for seven (7) boilers The last four (4) boiler furnaces have membrane tubewall construction and are in a relatively satisfactory state of repair

Superheater Tubing The furnace and convective pass roof tubing's external cold side low temperature corrosion is postulated to be due to the same reason as for the furnace wall tubes, i e breakdown of tube casing and lagging/insulation We will make an allowance in our unit cost estimates for a fifteen (15) percent roof tube replacement for seven (7) boilers The last four (4) furnaces have membrane wall roof construction, and are in a satisfactory state of repair We postulate that the finishing tertiary superheater tube elements and the pendant secondary superheater have no major damage, thus they do not need to be replaced at this time

Economizer Tube Bank Upgrade The existing economizer tube banks consist of plain tubes in a staggered tube arrangement The tubes are 32 mm OD x 4 mm thick, and spacing across/with the gas flow is 75/50 mm Clearly tube spacing is considered inadequate, especially in the light of the ineffective shot type cleaning equipment Burns and Roe will propose replacement tube banks of the extended heating surface (finned tubes) type, with an in line tube arrangement The type of extended heating surface shall be suitable for pulverized high ash content coal fired boilers and for the existing shot type cleaning equipment Our cost estimates will include an allowance for a complete economizer replacement (including inlet/outlet headers) for all eleven (11) boilers

Tubular Main Airheater Tube banks Upgrade The existing main airheater tube banks are 40 mm OD x 4 mm thick tubes They are in a staggered tube arrangement in counterflow with the fluegas in the tubes in down flow, and air over the tubes in crossflow The tube spacing across the combustion airflow is 34/33 5 mm and 45 mm with the airflow Tube diameters as well as the tube spacing across the airflow are considered inadequate for fluegas from pulverized coal firing and for the installed shot type heating surface cleaning equipment Burns and Roe will propose replacement tube banks with outside tube diameters, tube thicknesses and tube spacing to western vendors' standards The following specification shall be used in the upgrade of the airheater tubes The minimum tube OD shall be 51 mm, The minimum tube spacing across the airflow shall be 51 mm, The minimum tube spacing with airflow shall be 66 7 mm We will include a cost allowance for a complete replacement of all tube banks for all eleven (11) boilers

Firing System (Pulverizer Coal Silo, Feeder, Pulverizer, Primary Air Fan and Burners) The silos have a square cross section with an epoxy resin coating, a tapered circular cross section bottom funnel, with a 60° angle to the horizontal, and a sloping raw coal conduit to volumetric raw coal feeder The plant personnel have reported raw coal hang-ups and rat-holing in the silos along with mechanical problems with the volumetric type feeders The high speed, horizontal shaft, Hammer mills are the major bottleneck to the restoring of full steaming capacity of the boilers for the following reasons (a) The boilers have no standby pulverizers, all three (3) mills are required to operate at full load (b) Mill grinding capacity is insufficient for the low grade coals now fired (c) Mill drying capacity is insufficient for the low grade coal, i e too low classifier exit PA/PC mixture temperature results in conduit blockages and insufficient PA fan performance (d) Insufficient mill housing air tightness resulting in large quantities of unmeasured hot primary air leakage to the atmosphere which further aggravates the deficient PA fan performance (e) Lack of mill spare parts (f) Inferior mill layout resulting in difficulty of mill repairs due to lack of easy accessibility (g) High wear rates of the mill hammers, only 700 operating hours The hammers are made of a high alloy steel and thus they are fairly expensive (h) Seal air fan volume flow and pressures are inadequate with resultant further hot PA leakages to the atmosphere

The installed firing system is of the multi flame envelop type, with a total of six (6) per boiler horizontal swirl type burners positioned in the furnace sidewalls The burners are not low NO_X type The burner system has no ignitors and no flame scanners, ignition is by natural gas main fuel injectors, flame scanning is visual only through flame observation ports No mechanical (e g coal nozzles erosion, high temperature metal oxidation) problems were reported

Heating Surfaces Cleaning Equipment It is understood that the installed furnace wall blowers and retractable sootlances for the superheater pendant elements are operational Due to the substantially increased ash content of the coal presently fired however, they are unlikely to provide satisfactory degrees of heating surface cleanness Burns and Roe considers a practical solution to this operating problem to be an improvement of coal quality, not an increased number of sootblowers (wall or retractable) Increasing the frequency of sootblowing cycles per each shift may become another solution when the full load steam output capacity of the boiler has been restored According to the TES operating staff, the rear convective pass shot cleaning systems of all boilers are inoperative Maintaining the economizer and tubular airheater with clean heating surfaces is an important operating requirement The elimination of the existing shotclean system and the retrofitting of retractable or rotating

176

stationary sootlances is not feasible due to lack of space availability (except for the top economizer tube bank)

Boiler Refractory, Insulation, Lagging, Casing (BRILC) and Tube Penetration Seals A major operating problem of the first seven (7) boilers is the increased ingress of unmeasured ambient (false) air, which is due to the deteriorated condition of BRILC, roof tubes tube penetration seals, and the bottom ash hopper seals This ambient air in-leakage increases fluegas velocities and reduces boiler efficiency (it increases pressure parts erosion wear, combustibles loss, furnace radiation losses, and furnace tubes cold side low temperature corrosion attacks) Thus, it must be minimized on all seven (7) boilers In our cost estimates we will make an allowance for the complete refurbishment of the BRILC and repairing of the tube penetration seals as required

Bottom Ash & Slag Removal Equipment The refractory lining of the dry ash hoppers requires refurbishing It is also understood that the ash crushers / drivers lack spare parts The screw conveyor must also be refurbished, and lacks spare parts

Draft Plant The forced draft (FD) and induced draft (ID) fans mechanical components and electric motor drives are in a reasonably good condition, only routine maintenance is required The ID fans housing insulation should however be refurbished The ID fans flow capacity limitation should be eliminated once the ambient unmeasured air ingress into the furnace/boiler has been minimized In addition, the ID fans housing low temperature corrosion, erosion wear requires routine maintenance

Air and Fluegas Duct Systems, Dampers, Expansion Joints and Structural Supports Low temperature corrosion attack and flyash erosion wear are the main operating problems of the fluegas ducting There are no indications from the TES operating staff of major problems with the expansion joints, dampers, or duct systems structural supports Thermal insulation of the fluegas and hot combustion air duct systems are in need of refurbishing The hot combustion air recirculation duct system (for tubular airheater cold end low temperature corrosion protection) is operative and should be refurbished so that it can automatically maintain the airheater cold end minimum metal temperature

177

3 2.2 Assessment of Steam Turbines/Generators and their Auxiliaries

Thermal Performance Design/Current and Equipment Descriptions

(a) Turbines Units 1 and 2 Description

The Units 1 and 2 steam turbines are the oldest units operating at the Bishkek power plant Originally they were both nominal 25 MW non-reheat condensing units Unit 1 was a type PT-25-90/10 which provided both industrial steam and district heat, and Unit 2 a type T-25-90 machine which only provides district heat Each turbine is of a single cylinder design and consists of high pressure (HP), intermediate pressure (IP), and low pressure (LP) sections The rotors of the steam turbine and the electric generator are connected with a semi-flexible coupling The turbogenerator set has six (6) bearings a combined journal and thrust bearing and five journal bearings for the turbine-generator-exciter train

Main steam from the steam generators is supplied to the steam chest through a stop valve The design main steam pressure and temperature are 90 kg/cm^2 (gauge) and 535°C, respectively The steam from the steam chest flows to the turbine nozzle boxes through 5 control valves and four inlet pipes There is also an overload valve on top of the turbine which was designed to be used to pass steam from the control stage chamber to the 5th stage when the steam rate to the turbine had to be increased above a certain value (155 ton/h for Unit 1 and 123 ton/h for Unit 2) This valve is opened simultaneously with the fifth valve A cross sectional drawing of the Unit 1 steam turbine is shown in Figure 3-1

Control of steam pressure for the industrial steam and district heating extractions is accomplished with the adjustment of control diaphragms (grid valves)

The design thermal performance data for the Units 1 and 2 steam turbines are shown in Table 3-3 As can be seen from the data presented, the Unit 1 steam turbine was modified and uprated to 35 MW (from 25 MW) This reconstruction was performed in 1967 and involved the increase of the steam path to accept a higher flow rate from 155 t/h to 245 t/h, reblading of the 16 HP stages, changing the grid valve for the industrial steam supply control, and the increase of the control valve diameters from 70 mm to 80 mm

The condensing equipment consists of two-pass surface condensers of the type K-2-2000-1 Cooling water supply was designed to be separately admitted to each half of the condenser tube bank, which allowed the on-line cleaning of the condensers

177

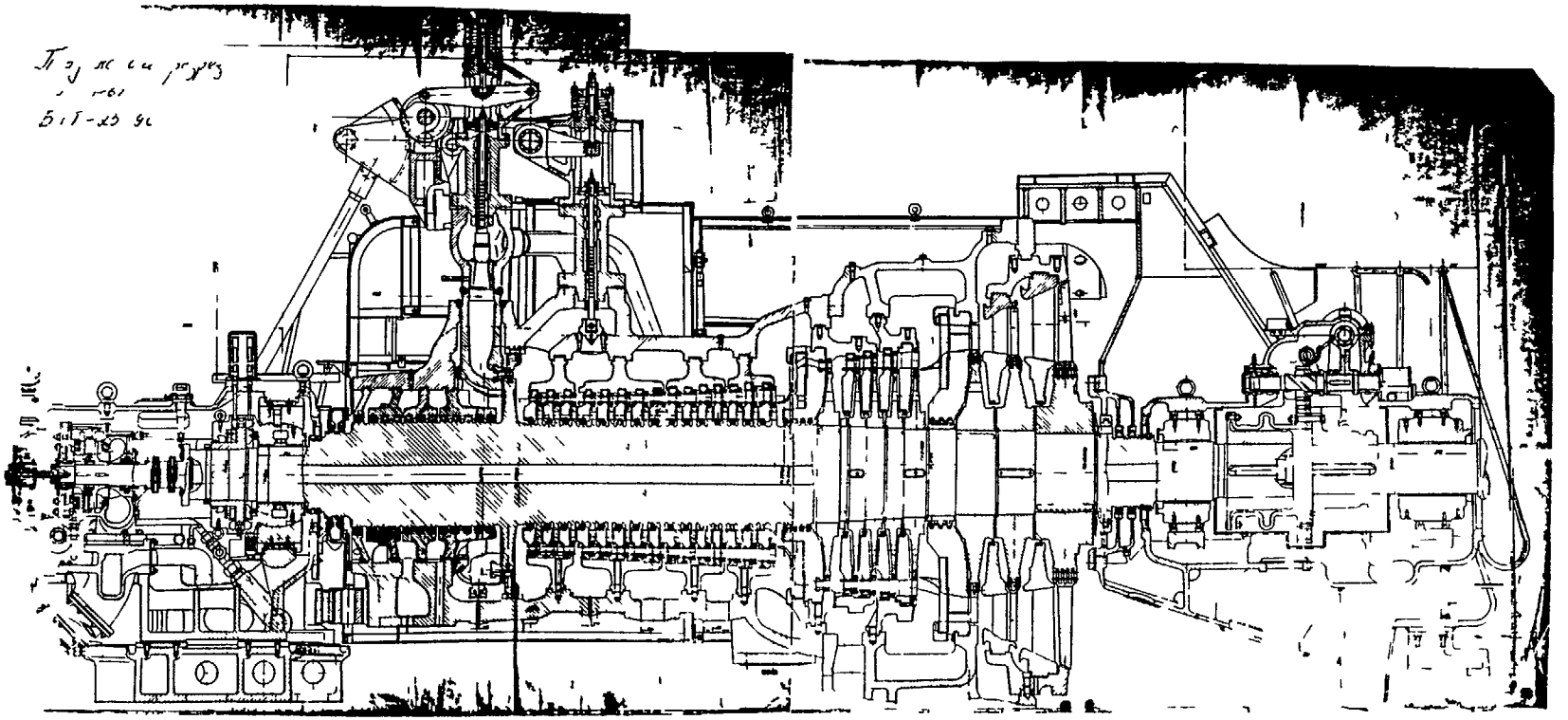

FIGURE 3-1: Cross-sectional drawing of the Unit #1 Steam Turbine

Table 3-3

THERMAL DESIGN PERFORMANCE DATA FOR UNITS 1 AND 2

	UNIT 1	UNIT 2
Turbine Type	PT-35-90/10	T-25-90
Power rating, kW	35,000	25,000
Main steam pressure, kg/cm^2 (g)	90	90
Main steam temperature, °C	535	535
Number of extractions	4 + 2R	5 + 1R
Final feedwater temperature, °C	218	223
Turbine exhaust pressure, kg/cm^2 abs	0 035	0 035
Nominal Industrial steam extraction		
Flow, t/h	122	-
Pressure, kg/cm^2 (g)	10	-
Temperature °C	280	-
Nominal DH steam extraction		
Flow, t/h	53	92
Pressure, kg/cm^2(g)	1 2	1 2
Temperature, °C	110	104
Design main steam flow rate at nominal extraction values, t/h	210	130
Maximum Industrial extraction, t/h	180	-
Maximum DH steam extraction, t/h	92	92
Maximum steam flow rates through		
HP section, t/h	240	150
IP section, t/h	172	
LP section, t/h	80	88
Maximum pressure at		
Industrial extraction, kg/cm^2	12	-
DH extraction, kg/cm^2	1 5	1 5
Steam rate at nominal extraction, kg/kWh	6 4	5 16

17a

It should be noted, that the condensers for Units 1 and 2 were modified in order to operate in a lower vacuum (higher backpressure) regime, and no circulating water flow in the tubes Instead of circulating water the condensers of Units 1 and 2 use district heating water makeup for cooling, while heating up the makeup water in series The cold makeup water (city water) from the water treatment plant first goes through the Unit 1 condenser where it is heated by about 6°C, then it is routed through the Unit 2 condenser Here the temperature of this water is further increased by about 6-8°C, and then the makeup water is directed to the vacuum deaerators serving the district heating system After deaeration and further heating in closed heat exchangers the warm make-up is pumped to the return header of the district heating system

Because the Units 1 and 2 turbines have virtually no heat rejection into the environment, they can operate very efficiently However, the electric output is reduced (as is the case with all other units) due to the inability of the steam generator to produce the design turbine main steam parameters The actual operating performance of Units 1 and 2 (based on an entire year of operation - Year 1993) is shown in Table 3-4

The district heating heat exchangers associated with the Unit 1 and Unit 2 turbines are DH1A and DH1B respectively In addition, during colder weather and corresponding higher heat load conditions, the district heating water can be further heated by a peaking district heating heat exchanger (PDH1) Heating steam for this exchanger is provided from the industrial steam extraction of Unit 1 The schematic arrangement of the Unit 1 turbine steam/feedwater cycle is shown in Figure 3-2 Similar schematic for the Unit 2 turbine cycle is shown in Figure 3-3

Both Units 1 and 2 use the same type of generator They use Type TBC-30, which is rated for 30 MW_E with a voltage of 6 3 kV The electric power from both generators is transmitted through 6 kV transmission lines All the electric power needs of the station are fed from this 6 kV line

FIGURE 3-2

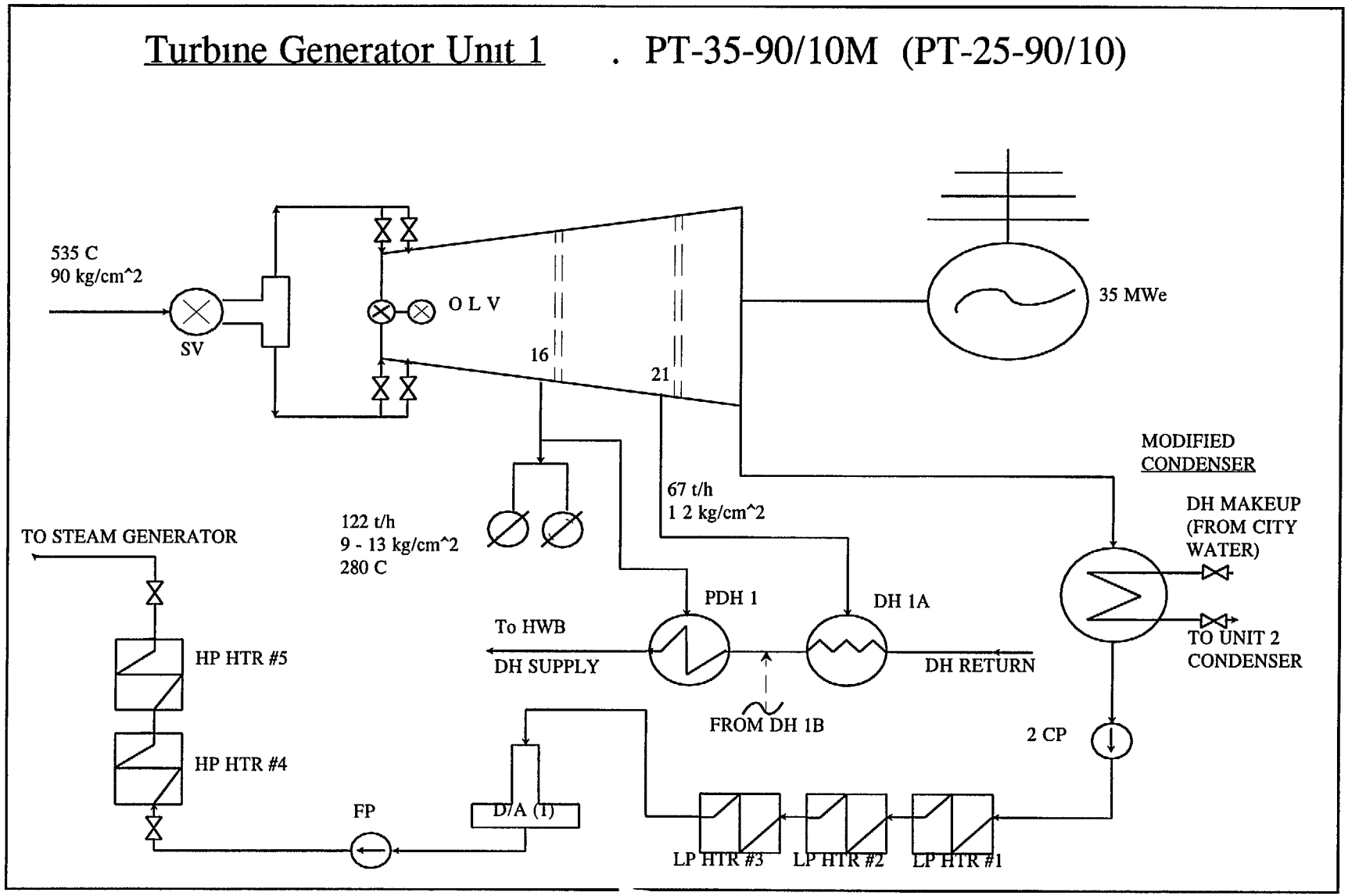
Turbine Generator Unit 1 . PT-35-90/10M (PT-25-90/10)
535 C
90 kg/cm^2
SV
O L V
16
21
35 MWe
MODIFIED
CONDENSER
67 t/h
1 2 kg/cm^2
DH MAKEUP
(FROM CITY
WATER)
TO STEAM GENERATOR
122 t/h
9 - 13 kg/cm^2
280 C
PDH 1
DH 1A
To HWB
DH SUPPLY
DH RETURN
TO UNIT 2
CONDENSER
HP HTR #5
HP HTR #4
FROM DH 1B
2 CP
FP
D/A (1)
LP HTR #3
LP HTR #2
LP HTR #1

FIGURE 3-3

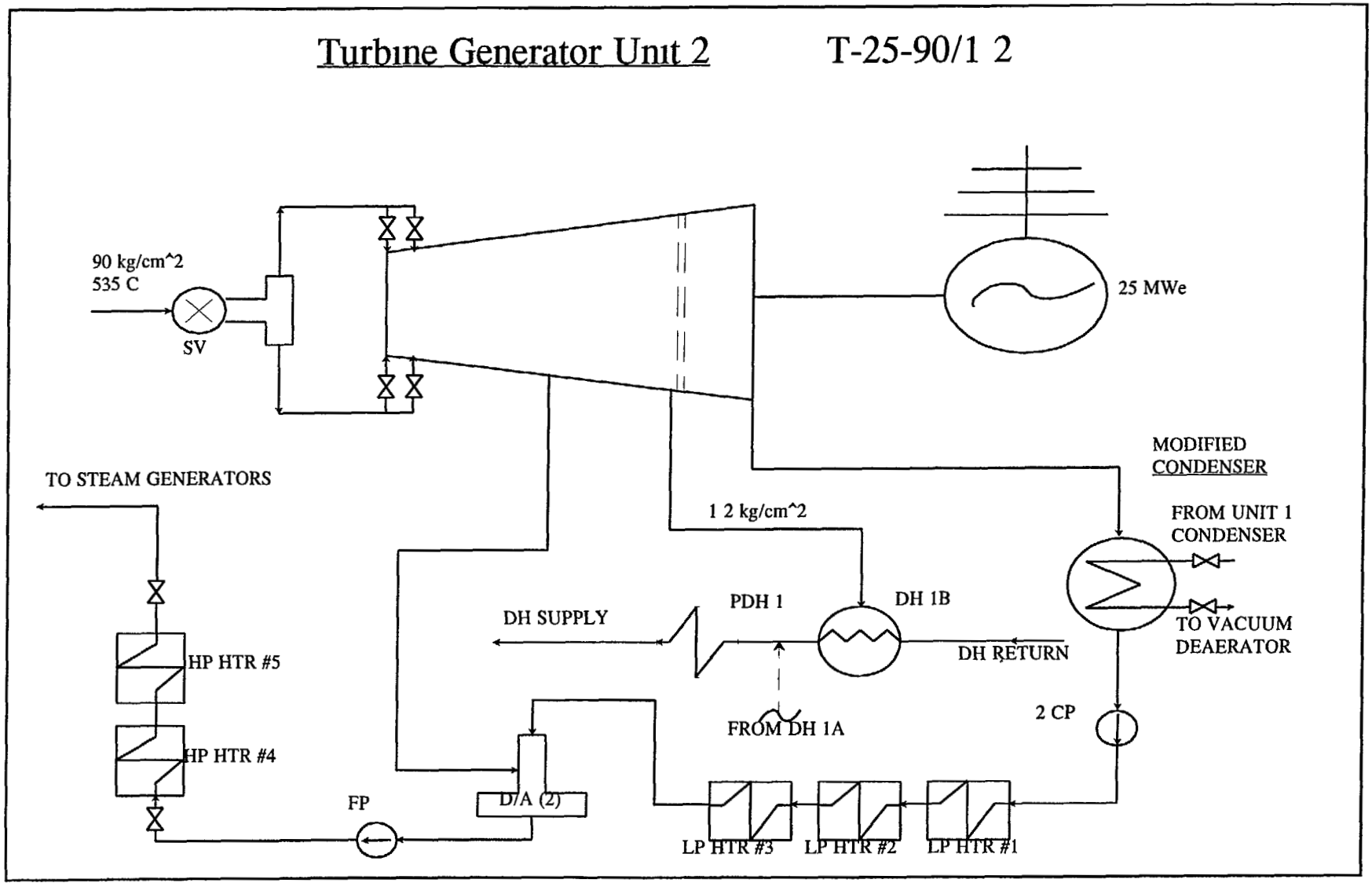
Turbine Generator Unit 2
T-25-90/1 2
90 kg/cm^2
535 C
SV
25 MWe
MODIFIED
CONDENSER
TO STEAM GENERATORS
1 2 kg/cm^2
FROM UNIT 1
CONDENSER
PDH 1
DH 1B
DH SUPPLY
DH RETURN
TO VACUUM
DEAERATOR
HP HTR #5
HP HTR #4
FROM DH 1A
2 CP
FP
D/A (2)
LP HTR #3
LP HTR #2
LP HTR #1

TABLE 3-4

ACTUAL ANNUAL OPERATING PERFORMANCE OF UNITS 1 AND 2
(Based on 1993 data)

	UNIT 1	UNIT 2
Generated Electrical Energy, 1000 kWh	118,732	145,869
Average Electric Load, MW	19 4	19 2
Average Thermal Load, Gcal/h	48 2	33 2
Average Industrial Load, Gcal/h	17 2	-
District Heating Load, Gcal/h	0 6	7 1
Useful Heat Recovery in Condenser, Gcal/h	30 4	26 1
Hours of Operation/Reserve, hours	6109/1111	7598/784
Electrical Energy Generated in the Heating Mode, 1000 kWh	118,732	134,084
Capacity Factors - Electrical/Thermal, %	38 7/27 6	66 6/59 3
Number of Starts	10	3
Inlet Steam Pressure, kg/cm^2 (gage)	83 2	83 2
Industrial Extraction Pressure, kg/cm^2 (gage)	12 6	-
DH Extraction Pressure, kg/cm^2 (gage)	1 15	1 42
Turbine Backpressure, kg/cm^2 (abs)	0 0527	0 0476
Main Steam Temperature, °C	532	533
Average Air Inleakage to Condenser, kg/h	12 2	11 2
Final Feedwater Temperature, °C	207 5	200 1
Turbine Gross Heat Consumption, kcal/kWh	945	1061

(b) Turbines Units 3, 7 and 8 Description

Though generally of similar arrangement turbine 3 and turbines 7 and 8 have different power and thermal ratings Unit 3 is also the oldest of these units Unit 3 is a Type PT-50/90/13 turbine with a nominal electric output of 50 MW, whereas Units 7 and 8 currently have a nominal electric output rating of 60 MW All these turbines provide both industrial steam and district heat A cross sectional drawing of this type of turbine is shown in Figure 3-3A

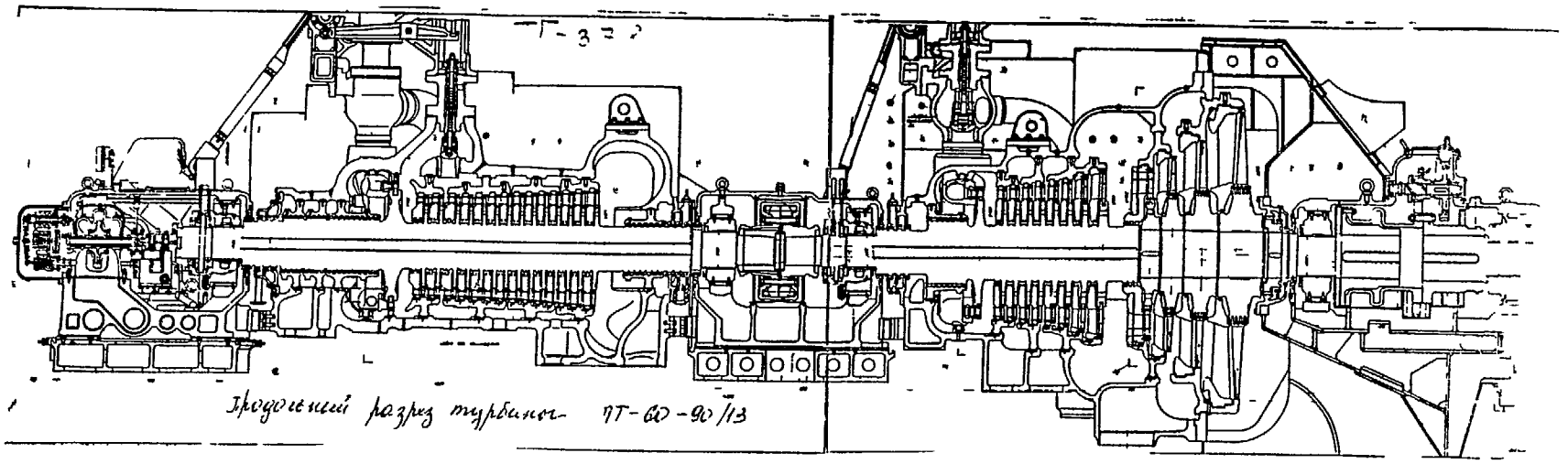

FIGURE 3-3A: Cross-sectional drawing of the Unit #3, #7, and #8 Turbines

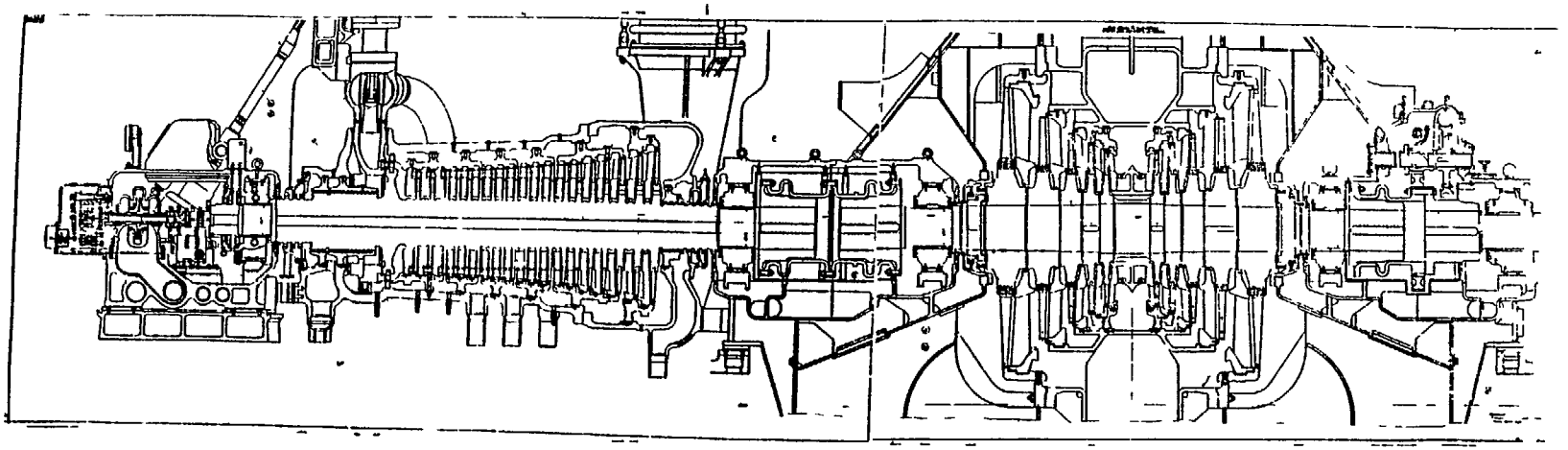

FIGURE 3-3B: Cross-sectional drawing of the Unit #6, #9, and #10 Turbines

The above turbines were manufactured by UTZ and were placed into service in 1963, 1970 and 1972, respectively The turbine is a single shaft two-casing design with an HP cylinder and a combination IP-LP cylinder The HP section has a rotor with 15 stages including one control stage The combined IP-LP section consists of a total of 13 stages including two control stages Industrial steam is extracted at the end of the HP section, and its pressure is controlled by control valves located at the inlet of the combined IP-LP turbine The district heating extraction is controlled by a variable orifice diaphragm (grid valve) which is located at the inlet of the LP section of the combined IP-LP house The rotors of the HP section and the IP section are one-piece forged, whereas the rotor of the LP section consists of 4 fixed discs The rotors of the HP section and the combined IP-LP section are connected by a flexible spring coupling The LP rotor and the electric generator are connected with a rigid coupling The complete turboset has 8 bearings including a combined thrust-journal bearing The blades of the last stage (28th stage) of Unit 3 were shortened in 1973 and the unit was modified to use district heating return water for condenser cooling, while retaining the capability of this unit to operate with circulating water cooling also

Similar modifications were done to Units 7 and 8 at later dates They can both be operated either using circulating water or district heating return water for condenser cooling During operation with district heating return water cooling the condenser, the vacuum is deteriorated (higher back pressure) However, under this operating mode the turbines can operate at high fuel utilization efficiency because there is virtually no heat loss to the environment The design thermal performance data for the Unit 3, 7 and 8 steam turbines are shown in Table 3-5

The condensing equipment consists of two pass surface condensers of the type 50-KCS-4B with a total tube surface area of 3000 m^2 Design cooling water flow is 8000 m^3/h Provision was made to clean one half of the condenser during operation The regenerative feedwater system of these units consists of 4 Low Pressure (LP) heaters, a deaerator and 3 High Pressure (HP) heaters The district heating condensers associated with Turbine 3 are DH2A and DH2B If further heating is required it can be accomplished in peaking heater PDH2 connected in series with the above district heating condensers Heating steam for PDH2 is provided from the industrial steam extraction of Unit #3

Similar district heating arrangements are provided for Unit 7 and Unit 8 turbines For Unit 7 the regular district heating condensers are DH5A and DH5B with peaking heater PDH3, and for Unit 8 the normal district heating condensers are DH6A and DH6B with peaking heater PDH4 Schematic diagrams of the Unit 3, 7 and 8 turbines are shown in Figures 3-4, 3-5 and 3-6, respectively Actual operating performance of Units 3, 7 and 8 based on the 1993 annual operating data is shown in Table 3-6

TABLE 3-5

THERMAL DESIGN PERFORMANCE DATA FOR UNITS 3, 7 AND 8

	UNIT 3	UNIT 7	UNIT 8
Nominal Electric Power Output, Design, MW Current, MW	 50 50	 60 60	 60 60
Thermal Output Design, Gcal/h Current, Gcal/h	 151 151	 164 164	 164 164
Turbine Type/Model Design Current	 PT-50-90/13 PT-50-90/13	 PT-60-90/13 PT-60-90/13	 PT-60-90/13 PT-60-90/13
Main Steam Inlet Pressure, $kg/cm^2(g)$	90	90	90
Main Steam Inlet Temperature, °C	535	535	535
Main Steam Flow, t/h	337	402	402
Nominal Industrial Steam Extraction, t/h	140	165	165
Max Possible Ind Steam Extraction, t/h	230	260	260
Industrial Steam Extr Pressure, kg/cm^2	10-16	10-16	10-16
DH Extraction Steam Flow t/h	100	115	115
Nominal DH Heat Load, Gcal/h	51	61	61
DH Extraction Steam Pressure, $kg/cm^2(a)$	0 7-2 5	0 7-2 5	0 7-2 5
Condenser Pressure, $kg/cm^2(a)$	0 035	0 035	0 035
Generator Nominal Rating, MW	60	60	60
Method of Generator Cooling	Water	Water	Water
RPM	3000	3000	3000

Unit 3 has a generator of the Type TB-60-2, which is rated for 60 MW_E with a voltage of 10 5 kV Electric power from the generator is transmitted through the block OPY-110 kV #1 This transmission block is composed of six overhead lines Units 7 and 8 have the Type TBF-60-2 generator This generator has a capacity of 60 MW_E, with a voltage of 10 5 kV Unit 7 transmitts its electric power through the block OPY-110 kV #1, while Unit 8 uses block OPY-220 kV The block OPY-220 kV consists of two overhead transmission lines

(c) Turbines Units 6, 9 and 10 Description

These units are the ones with the greatest outputs currently operating at the Bishkek Power Station All have double flow exhausts each with individual condensers None of the units have industrial steam extraction, but they all currently have the largest district heating supply capability Unit 6 was placed into operation in 1966 as a conventional condensing unit (Type K-100-90) However, in 1969 district heating extractions were placed in service to provide heating steam at 0 7-2 5 atmospheres In this modified state district heating steam is taken from the turbine crossover pipe The steam pressure can be controlled with butterfly valves installed in the crossover downstream of the take-off point Units 9 and 10 have similar district heating connections Unit 9 and Unit 10 were placed into operation in 1975 and 1977, respectively As heating steam is extracted from these turbines their original electric nominal rating has been reduced to 86 MW Thermal design performance data for these units are shown in Table 3-7 The cross sectional drawing of the original K-100-90 turbine is shown in Figure 3-3B

These steam turbines are single shaft, non-reheat units with separate HP and LP sections, which are connected by two parallel crossover pipes The HP section has 20 stages (including the control stage), the LP section has 5 double stages The HP rotor is a one-piece forged design, the LP rotor consists of fixed discs The two rotors are connected with semi-flexible couplings The LP rotor and the generator are connected with rigid coupling There are a total of 8 bearings supporting the rotor of the turboset As is the case with the other turbines described above, each unit is equipped with a turning gear to rotate the shaft at 3-4 RPM to provide uniform warm-up and cooldown

Main steam from the boilers is routed to the stop valves and steam chest From this point the steam flows to the high pressure turbine inlet through 4 pipes each equipped with a regulating valve The steam leaving the HP section flows to the LP section via two crossover pipes

FIGURE 3-4

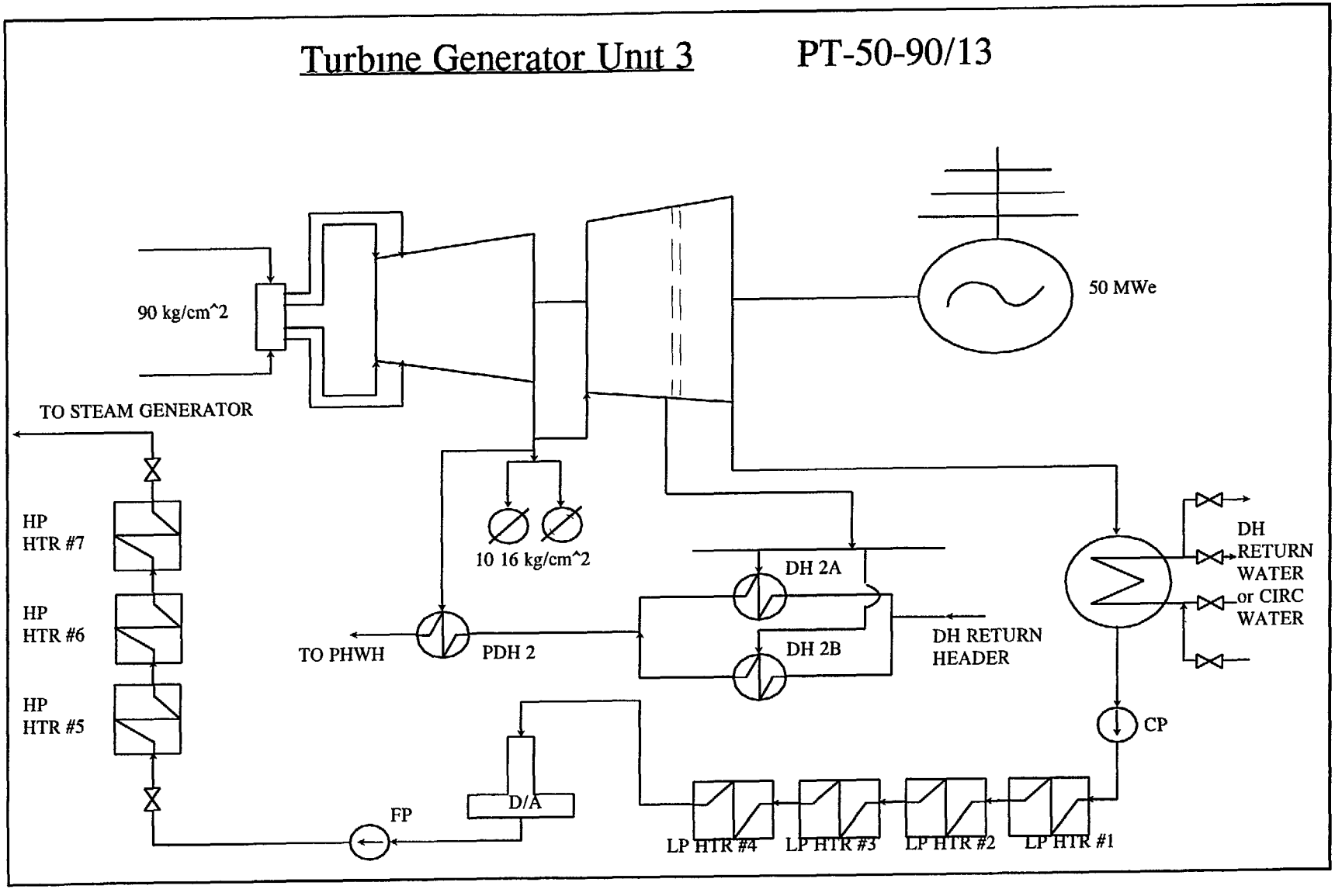
Turbine Generator Unit 3
PT-50-90/13
90 kg/cm^2
50 MWe
TO STEAM GENERATOR
HP
HTR #7
HP
HTR #6
HP
HTR #5
10 16 kg/cm^2
DH 2A
DH 2B
TO PHWH
PDH 2
DH RETURN
HEADER
DH
RETURN
WATER
or CIRC
WATER
CP
FP
D/A
LP HTR #4
LP HTR #3
LP HTR #2
LP HTR #1

FIGURE 3-5

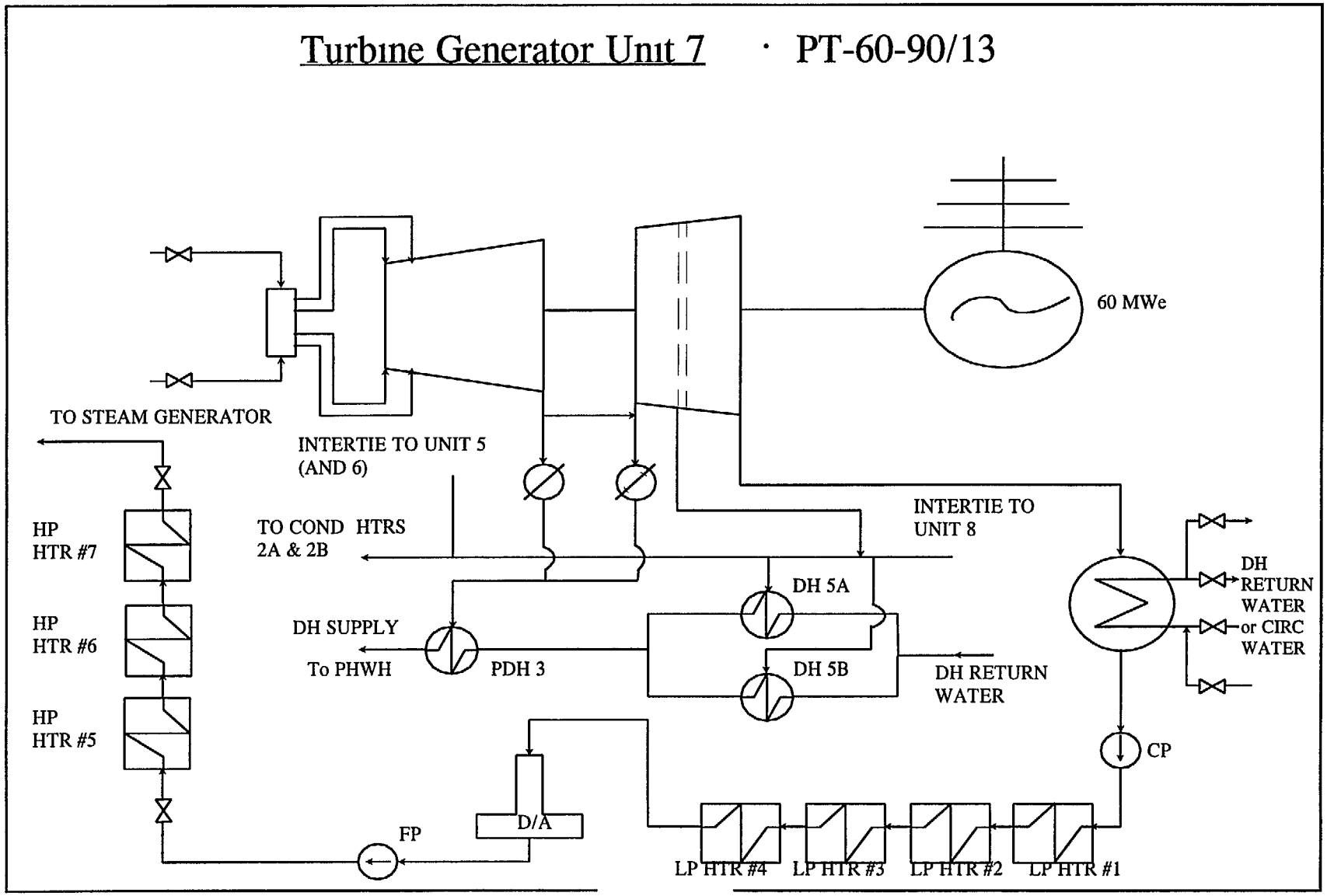
Turbine Generator Unit 7 · PT-60-90/13
60 MWe
TO STEAM GENERATOR
INTERTIE TO UNIT 5
(AND 6)
HP
HTR #7
HP
HTR #6
HP
HTR #5
TO COND HTRS
2A & 2B
INTERTIE TO
UNIT 8
DH 5A
DH SUPPLY
To PHWH
PDH 3
DH 5B
DH RETURN
WATER
DH
RETURN
WATER
or CIRC
WATER
CP
D/A
FP
LP HTR #4
LP HTR #3
LP HTR #2
LP HTR #1

FIGURE 3-6

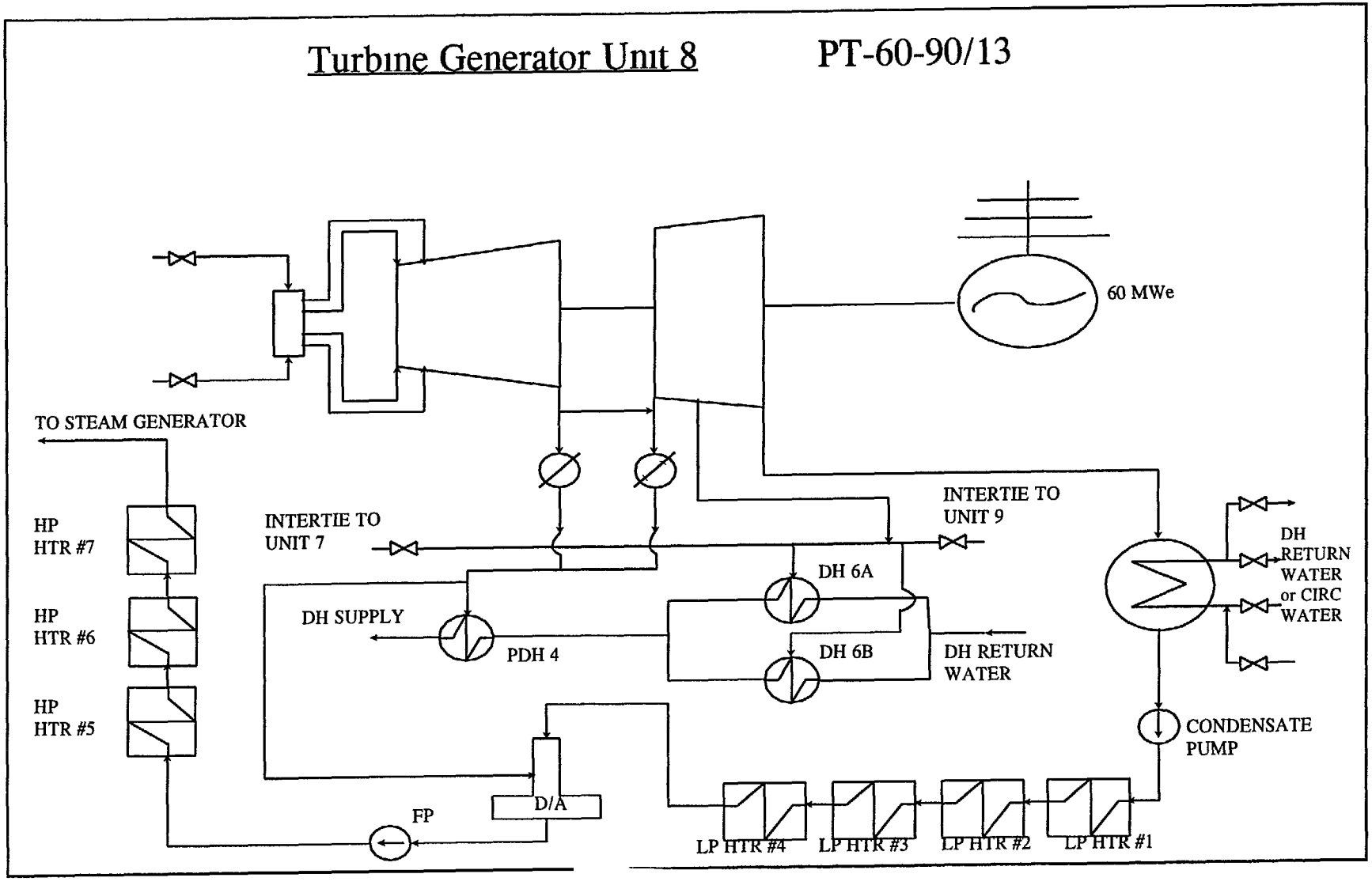
Turbine Generator Unit 8
PT-60-90/13
60 MWe
TO STEAM GENERATOR
HP
HTR #7
HP
HTR #6
HP
HTR #5
INTERTIE TO
UNIT 7
INTERTIE TO
UNIT 9
DH SUPPLY
PDH 4
DH 6A
DH 6B
DH RETURN
WATER
DH
RETURN
WATER
or CIRC
WATER
CONDENSATE
PUMP
D/A
FP
LP HTR #4
LP HTR #3
LP HTR #2
LP HTR #1

TABLE 3-6

ACTUAL ANNUAL OPERATING PERFORMANCE OF UNITS 3, 7 AND 8
(Based on 1993 Data)

	UNIT 3	UNIT 7	UNIT 8
Generated Electric Energy, 1000 kWh	187053	245022	202498
Average Electric Load, MW	36 2	37 6	40 4
Average Thermal Load, Gcal/h	78 0	106 5	97 2
Average Industrial Load, Gcal/h	27 9	77 0	60 0
District Heating Load, Gcal/h	30 2	8 3	17 7
Useful Heat Recovery in Condenser, Gcal/h	19 9	21 2	19 2
Hours of Operation/Reserve, hours	5162/3451	6526/1278	3068/1212
Electrical Energy Generated in the Heating Mode, 1000 kWh	153883	207136	161215
Capacity Factors - Electrical/Thermal, %	42 7/30 4	46 6/48 4	38 5/34 3
Number of Starts	4	3	11
Inlet Steam Pressure,kg/cm^2 (gage)	84 1	84 8	86 4
Industrial Extraction Pressure, kg/cm^2 (gage)	12 8	12 04	13 07
DH Extraction Pressure, kg/cm (gage)	1 48	1 55	1 58
Turbine Backpressure, kg/cm^2 (abs)	0 2036	0 1398	0 1906
Main Steam Temperature, °C	534	533	533
Average Air Inleakage to Condenser, kg/h	17 4	44 9	41 9
Final Feedwater Temperature, °C	223 9	220 5	225 4
Turbine Gross Heat Consumption, kcal/kWh	1228	1270	1287

Table 3-7

THERMAL DESIGN PERFORMANCE DATA FOR UNITS 6, 9 AND 10

	UNIT 6	UNIT 9	UNIT 10
Nominal Electric Power Output,			
Design, MW	100	110	110
Current, MW	86	86	86
Thermal Output			
Design, Gcal/h	-	-	-
Current, Gcal/h	102 6	102 6	103
Turbine Type/Model			
Design	K-100-90	K-100-90	K-100-90
Current	T-86-90/2 3	T-86-90/2 3	T-86-90/2 3
Main Steam Inlet Pressure, $kg/cm^2(g)$	90	90	90
Main Steam Inlet Temperature, °C	535	535	535
Main Steam Flow, t/h	408	408	408
Nominal Industrial Steam Extraction, t/h	-	-	-
Max Possible Ind Steam Extraction, t/h	-	-	-
Industrial Steam Extr Pressure, kg/cm^2	-	-	-
DH Extraction Steam Flow, t/h	200	200	200
Nominal DH Heat Load, Gcal/h	102 6	102 6	103
DH Extraction Steam Pressure, $kg/cm^2(a)$	0 7-2 5	0 7-2 5	0 7-2 5
Condenser Pressure, $kg/cm^2(a)$	0 035	0 035	0 035
Generator Nominal Rating, MW	100	100	120
Method of Generator Cooling	Water	Water	Water
RPM	3000	3000	3000

Table 3-8

ACTUAL ANNUAL OPERATING PERFORMANCE OF UNITS 6, 9 AND 10
(Based on 1993 data)

	UNIT 6	UNIT 9	UNIT 10
Generated Electrical Energy, 1000 kWh	66,988	280,060	365,966
Average Electric Load, MW	39 8	67 8	59 6
Average Thermal Load, Gcal/h	0	54 6	52 0
Average Industrial Load, Gcal/h	-	-	-
District Heating Load, Gcal/h	0	54 6	52 0
Useful Heat Recovery in Condenser, Gcal/h	-	-	-
Hours of Operation/Reserve, hours	1685/5320	4129/3878	6145/2092
Electrical Energy Generated in the Heating Mode, 1000 kWh	0	100,288	147,026
Capacity Factors - Electrical/Thermal, %	8 9/0	37 2/25 1	48 6/35 4
Number of Starts	1	6	2
Inlet Steam Pressure, kg/cm^2 (gage)	85 7	84 1	84 6
Industrial Extraction Pressure, kg/cm^2 (gage)	-	-	-
DH Extraction Pressure, kg/cm^2 (gage)	-	1 47	1 65
Turbine Backpressure, kg/cm^2 (abs)	0 041	0 044	0 044
Main Steam Temperature, °C	533	531	533
Average Air Inleakage to Condenser, kg/h	16 8	19 1	64 2
Final Feedwater Temperature, °C	193 9	220 1	218 8
Turbine Gross Heat Consumption, kcal/kWh	2404	2054	2036

District heating steam from the crossover pipes can be supplied from Unit 6 to three (3) district heating condensers connected in parallel (heaters DH4, DH4A and DH4B) Similar arrangements exist for Unit 9 (with district heating condensers DH7A, DH7B and DH7C) and for Unit 10 (with district heating condensers DH8, DH8A and DH8B, respectively)

The regenerative feedwater heating system for these units consists of five (5) LP heaters, a deaerator and three (3) HP heaters, in addition to condensate and feedwater pumps Drain from the district heating condensers is returned to the regenerative feed heating system The schematic arrangement of the steam/feedwater cycle for Units 6, 9 and 10 are shown in Figures 3-7, 3-8, and 3-9, respectively

The condensing equipment for each Unit is of type 100 KCS-4B which are two (each 3000 m^2) surface condensers Total cooling water flow required for the original design was 16,000 m^3/h The source of cooling water for these units is only circulating water from the intake canal In the future, consideration will be given to implementing modification for the Unit 9 condenser to use it for heating district heating return water No such modifications are planned for Units 6 and 10

The actual operating performance of Units 6, 9 and 10, based on the 1993 year data, is shown in Table 3-8 The above table seems to indicate the Unit 6 turbine was mostly used in the condensing regime (during summer time) and for only short period during the 1993 year The lower operating hours shown for these units indicates the preference for units described earlier which have generally better specific heat consumption (heat rate) than units 6, 9 and 10

All three Units use the same type generator TBF-100-2 This generator has a capacity of 100 MW_E, with a voltage of 10 5 kV Unit 6 generator is connected to the OPY-110 kV #1 transmission block Units 9 and 10 are connected to the OPY-220 kV transmission block

(d) Turbines Units 4 and 5 Description

The Unit 4 and 5 steam turbines were originally placed in operation in 1963 and 1965, respectively At the time of their installation they were straight condensing units of the same type (K-100-90) as those described above (Units 6, 9, and 10) In 1968 Unit 4 was reconstructed to provide heating steam extraction at 0 7-2 5 atmosphere The above units experienced severe last stage blades erosion during their operation and eventually Unit 4 was again reconstructed into a back-pressure turbine configuration in 1993 In this reconstructed configuration the low pressure blading has been removed, and the condenser disassembled Currently, the Unit 4 LP housing is still in place and the LP rotor shaft is passing through this housing to drive the electric generator The current type designation for this unit is R-35-90 and the new design back-pressure is 2 3-2 7 ata The steam consumption capability of the original HP turbine section was retained, and thus electric outputs above the nominal are possible

192

FIGURE 3-7

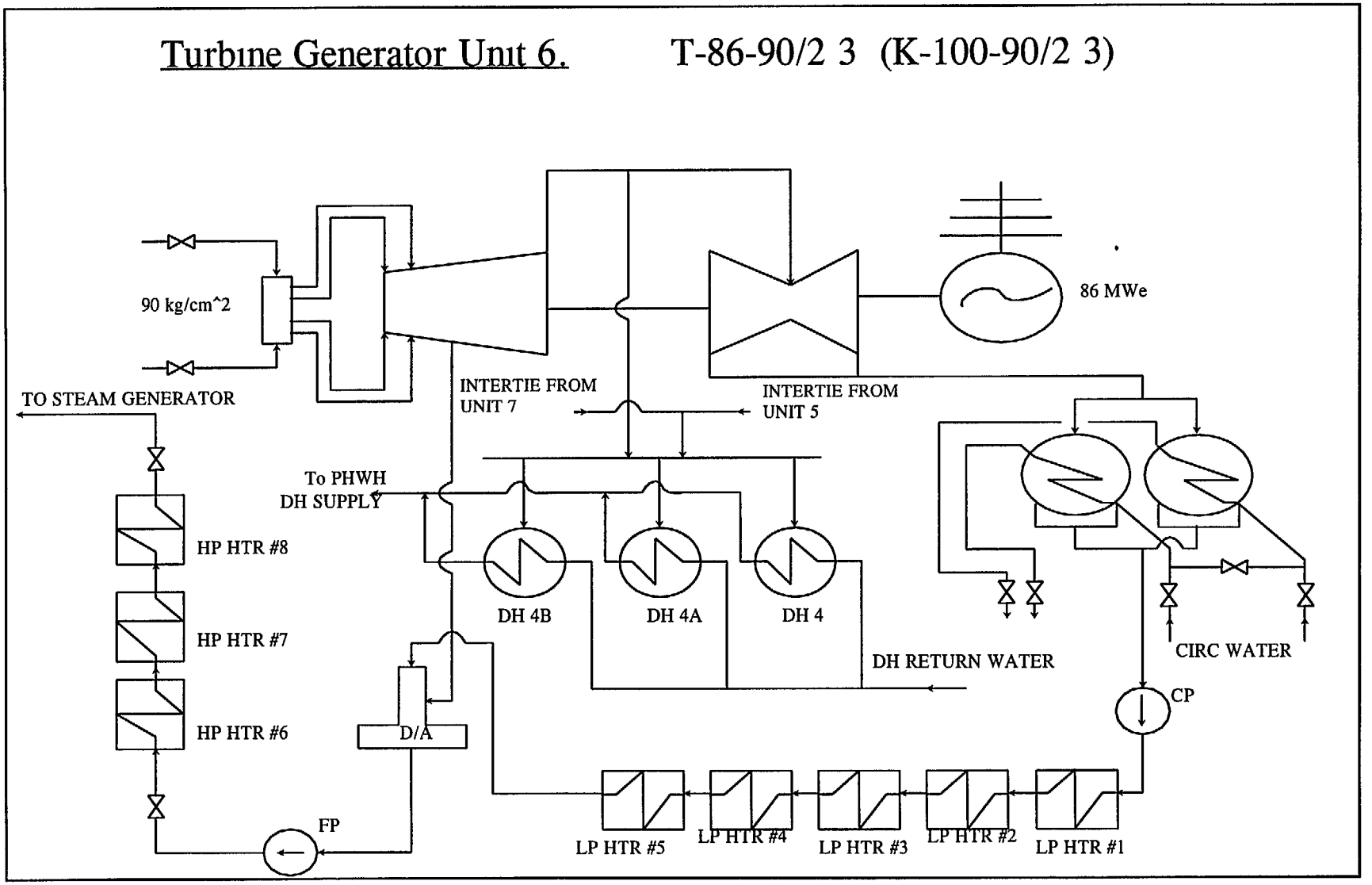
Turbine Generator Unit 6.
T-86-90/2 3 (K-100-90/2 3)
90 kg/cm^2
86 MWe
TO STEAM GENERATOR
INTERTIE FROM UNIT 7
INTERTIE FROM UNIT 5
To PHWH DH SUPPLY
HP HTR #8
HP HTR #7
HP HTR #6
DH 4B
DH 4A
DH 4
DH RETURN WATER
CIRC WATER
CP
D/A
FP
LP HTR #5
LP HTR #4
LP HTR #3
LP HTR #2
LP HTR #1

FIGURE 3-8

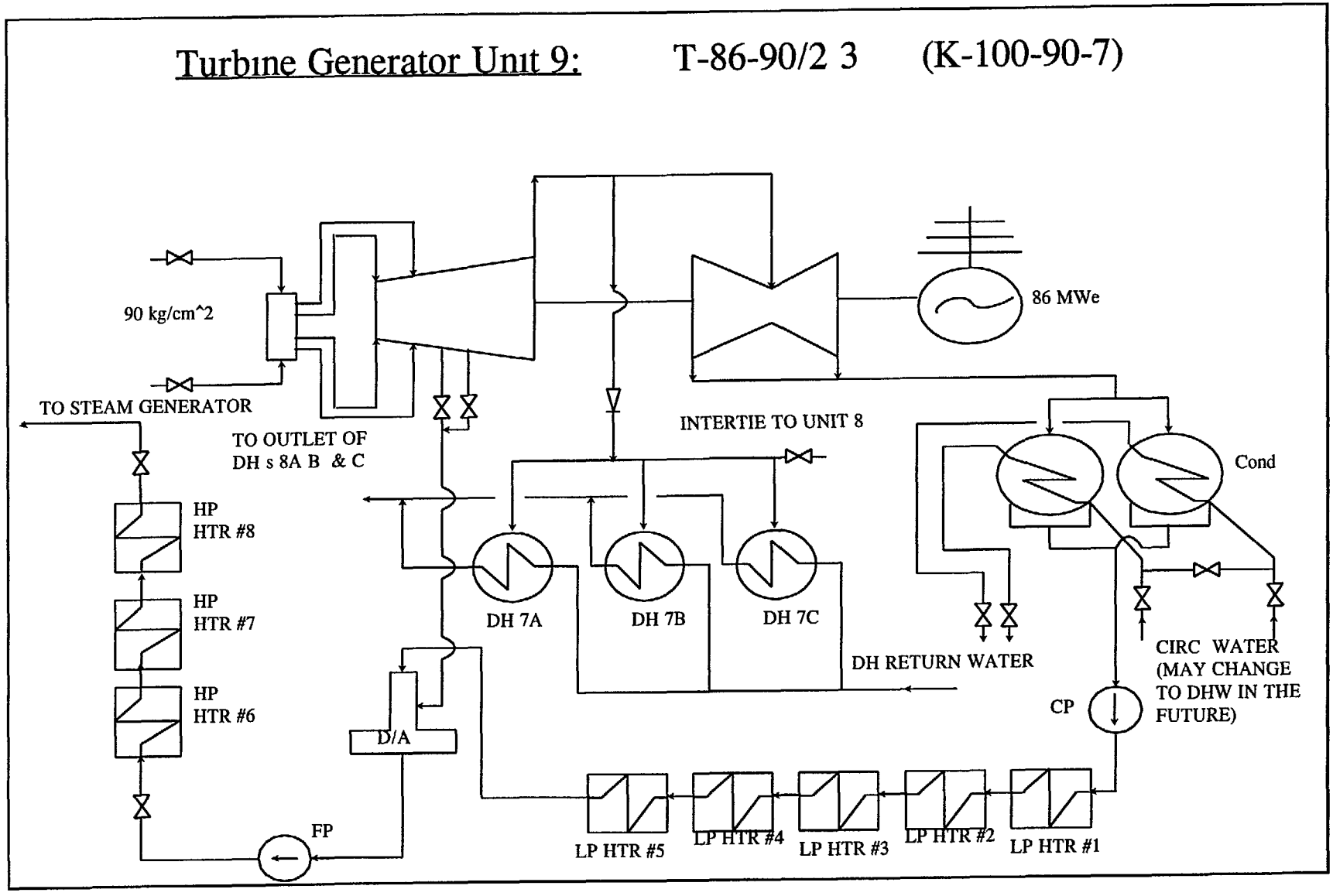
Turbine Generator Unit 9: T-86-90/2 3 (K-100-90-7)
90 kg/cm^2
86 MWe
TO STEAM GENERATOR
TO OUTLET OF
DH s 8A B & C
INTERTIE TO UNIT 8
Cond
HP
HTR #8
HP
HTR #7
HP
HTR #6
DH 7A
DH 7B
DH 7C
DH RETURN WATER
CIRC WATER
(MAY CHANGE
TO DHW IN THE
FUTURE)
CP
D/A
FP
LP HTR #5
LP HTR #4
LP HTR #3
LP HTR #2
LP HTR #1

FIGURE 3-9

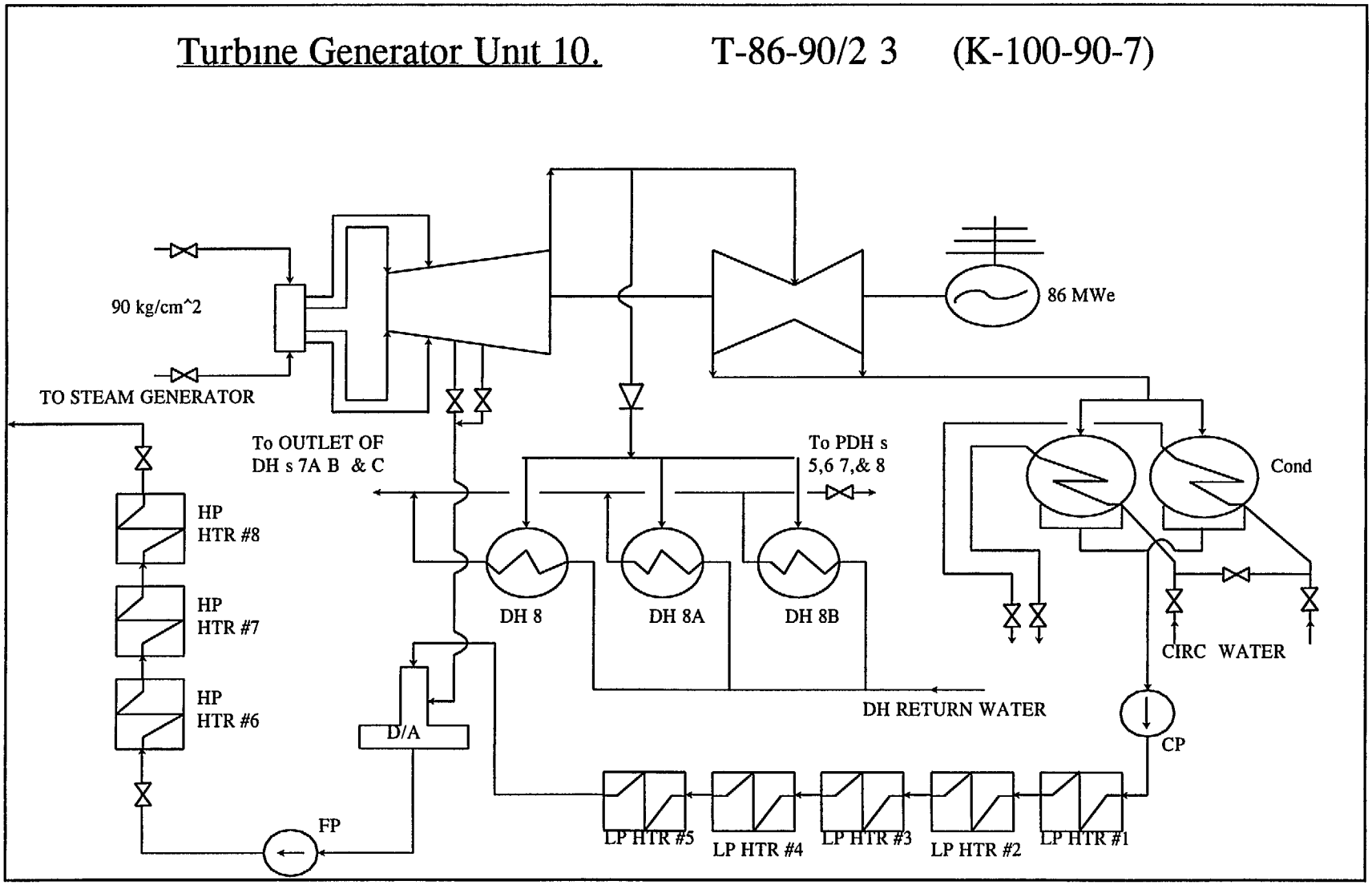
Turbine Generator Unit 10.
T-86-90/2 3
(K-100-90-7)
90 kg/cm^2
TO STEAM GENERATOR
86 MWe
To OUTLET OF
DH s 7A B & C
To PDH s
5,6 7,& 8
Cond
HP
HTR #8
HP
HTR #7
HP
HTR #6
DH 8
DH 8A
DH 8B
CIRC WATER
DH RETURN WATER
D/A
CP
FP
LP HTR #5
LP HTR #4
LP HTR #3
LP HTR #2
LP HTR #1

TABLE 3-9

THERMAL DESIGN PERFORMANCE DATA FOR UNITS 4 AND 5

	Unit 4	Unit 5
Nominal Electric Power Output,		
Design, MW	100	100
Current, MW	35	35
Thermal Output		
Design, Gcal/h	-	-
Current, Gcal/h	97	97
Turbine Type/Model		
Design	K-100-90	K-100-90
Current	R-65-90	R-35-90
Main Steam Inlet Pressure, $kg/cm^2(g)$	90	90
Main Steam Inlet Temperature, °C	535	535
Nominal Main Steam Flow, t/h	200	200
Nominal Industrial Steam Extraction, t/h	-	-
Max Possible Ind Steam Extraction, t/h	-	-
Industrial Steam Extr Pressure, kg/cm^2	-	-
DH Extraction Steam Flow, t/h	184	184
Nominal DH Heat Load, Gcal/h	97	97
DH Extraction Steam Pressure, $kg/cm^2(a)$	2 3	2 3
Condenser Pressure, $kg/cm^2(a)$	-	-
Generator Nominal rating, MW	100	100
Method of Generator Cooling	Water	Water
RPM	3000	3000

TABLE 3-10

ACTUAL ANNUAL OPERATING PERFORMANCE OF UNITS

	Unit 4*	Unit 5
Generated Electrical Energy, 1000 kWh	461,850	283,559
Average Electric Load, MW	67 4	36 3
Average Thermal Load, Gcal/h	32	99 6
Average Industrial Load, Gcal/h	-	-
District Heating Load, Gcal/h	32	99 6
Useful Heating Recovery in Condenser, Gcal/h	-	-
Hours of Operation/Reserve, hours	6849/1183	7879/714
Electrical Energy Generated in the Heating Mode, 1000 kWh	101,607	283,559
Capacity Factors - Electrical/Thermal, %	N/A	92 5/91 7
Number of Starts	N/A	2
Inlet Steam Pressure, kg/cm^2 (gage)	90	86 3
Industrial Extraction Pressure, kg/cm^2 (gage)	-	-
DH Extraction Pressure, kg/cm^2 (gage)	N/A	1 65
Turbine Backpressure, kg/cm^2 (abs)	0 01	2 65
Main Steam Temperature, °C	535	533
Average Air Inleakage to Condenser, kg/h	15	-
Final Feedwater Temperature, °C	221 6	227
Turbine Gross Heat Consumption, kcal/kWh	2261	1020

*1992 data

Unit 5 was similarly reconstructed into the back-pressure mode following the erosion of last stage blades and the LP housing and the condenser were completely removed This modification to 2 3-2 7 atmosphere back-pressure operation occurred one year earlier (in 1992) compared to Unit 4 The official designation for this unit currently is R-35-90/2 3 The 35 MW output can be obtained when the main steam flow is about 200 tons/hour However, in actual operation the flow rate can increase to about the same value as for Unit 4, with a corresponding electric output increase The thermal design performance data for Units 4 and 5 are shown in Table 3-9

The regenerative feedwater system for Unit 4, following the above modifications, consists of two high pressure heaters, feed pumps, and a deaerator The district heating steam from the turbine exhaust can supply heat to district heating condensers DH3, DH3A and DH3B The regenerative feedwater heating system for Unit 5 consists of the same components as for Unit 4 The steam from the exhaust end of the turbine can be supplied to District Heating makeup water heaters 1, 1A and 1B The turbine exhaust header interties to the steam supply lines of district water heating (DH) condenser groups 3, 4 (normally supplied by turbines 4 and 6) and 5 (normally supplied by turbine 7) The turbine exhaust header is also interconnected with the header providing steam to the LP deaerator system The schematic arrangement of the steam/feedwater cycle for Units 4 and 5 are shown in Figures 3-10 and 3-11, respectively

The actual operating data available for the above units for 1993 indicates that Unit 4 was not operated This was obviously due to the actual modification work Table 3-10 shows operating performance for Unit 5 based on the 1993 year The available data for Unit 4 is also shown in this table however it is based on the 1992 year operation

From reviewing the data for all operating units in 1993 it can be seen that Unit 5 was operated for the most hours of any unit This is obviously due to the fact that virtually no heat loss exists (no condenser) to the environment because of the back-pressure type modification implemented for Unit 5, and because of the economic dispatch method followed at Bishkek

Both units 4 and 5 use the generator of type TBF-100-2 This generator has a capacity of 120 MW, with a voltage of 10 5 kV Units 4 and 5 also both use the OPY-110 kV #1 Transmission block

200

FIGURE 3-10

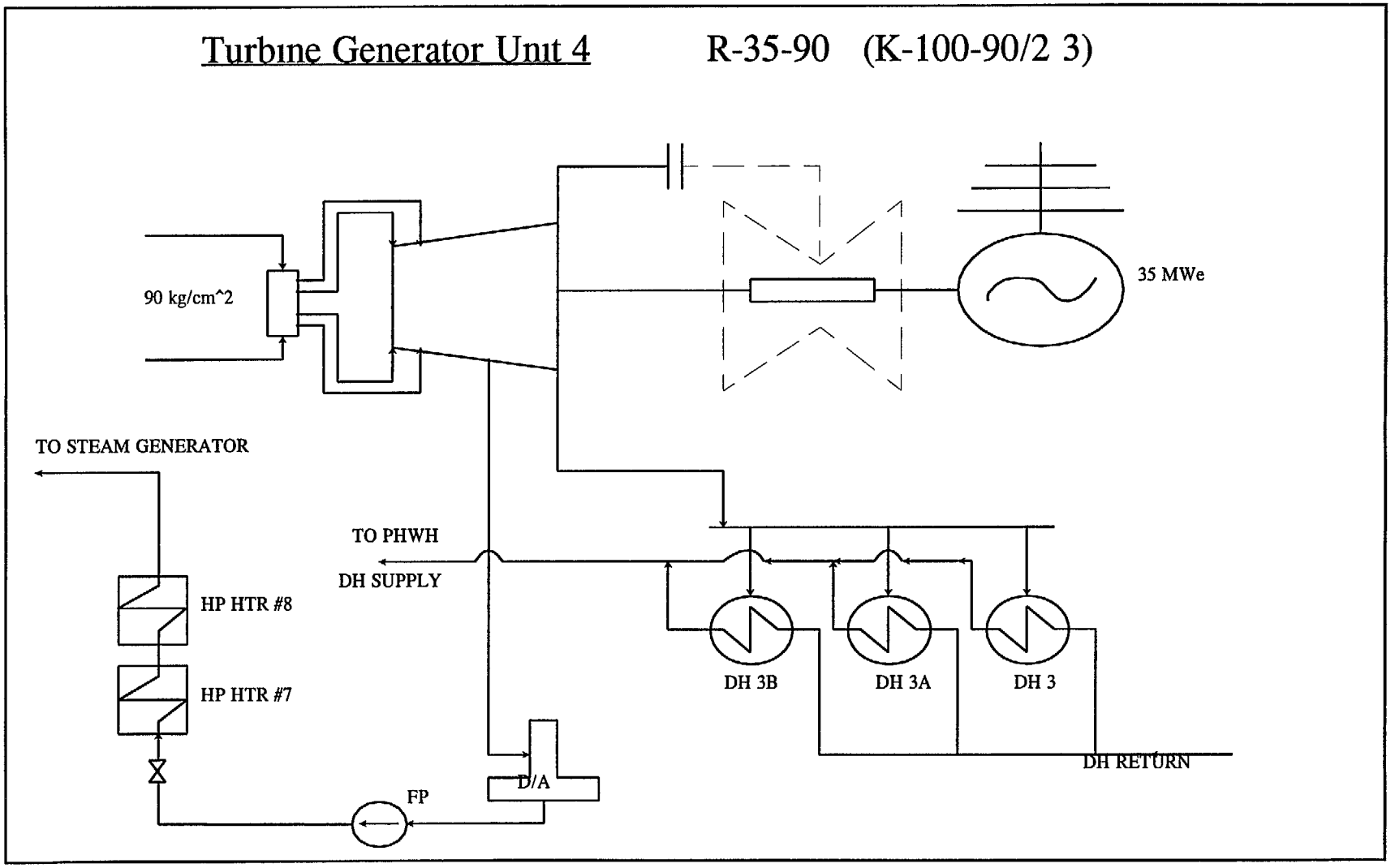

291

FIGURE 3-11

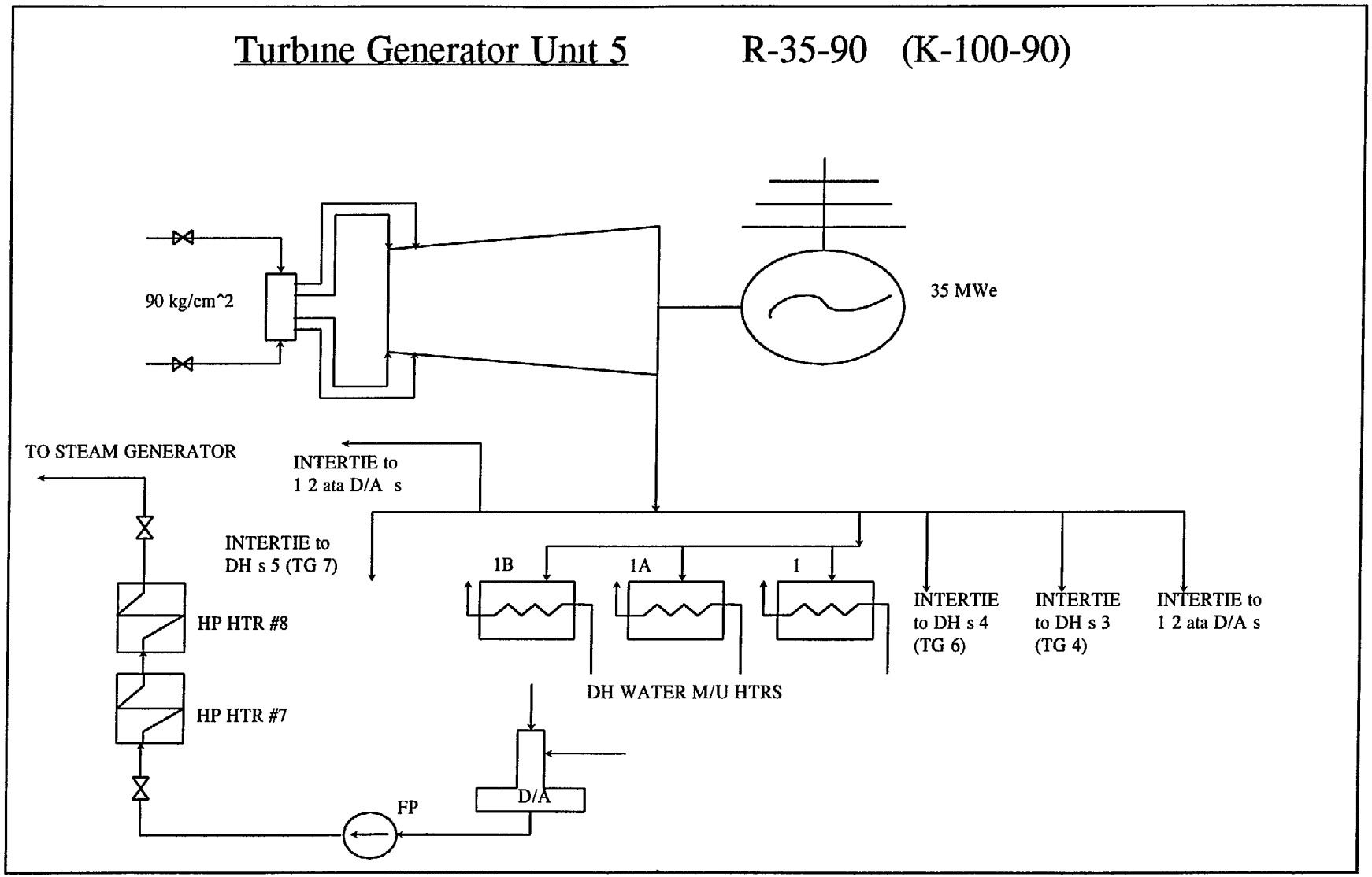
Turbine Generator Unit 5
R-35-90 (K-100-90)
90 kg/cm^2
35 MWe
TO STEAM GENERATOR
INTERTIE to
1 2 ata D/A s
INTERTIE to
DH s 5 (TG 7)
1B
1A
1
HP HTR #8
HP HTR #7
INTERTIE
to DH s 4
(TG 6)
INTERTIE
to DH s 3
(TG 4)
INTERTIE to
1 2 ata D/A s
DH WATER M/U HTRS
D/A
FP

FIGURE 3-12

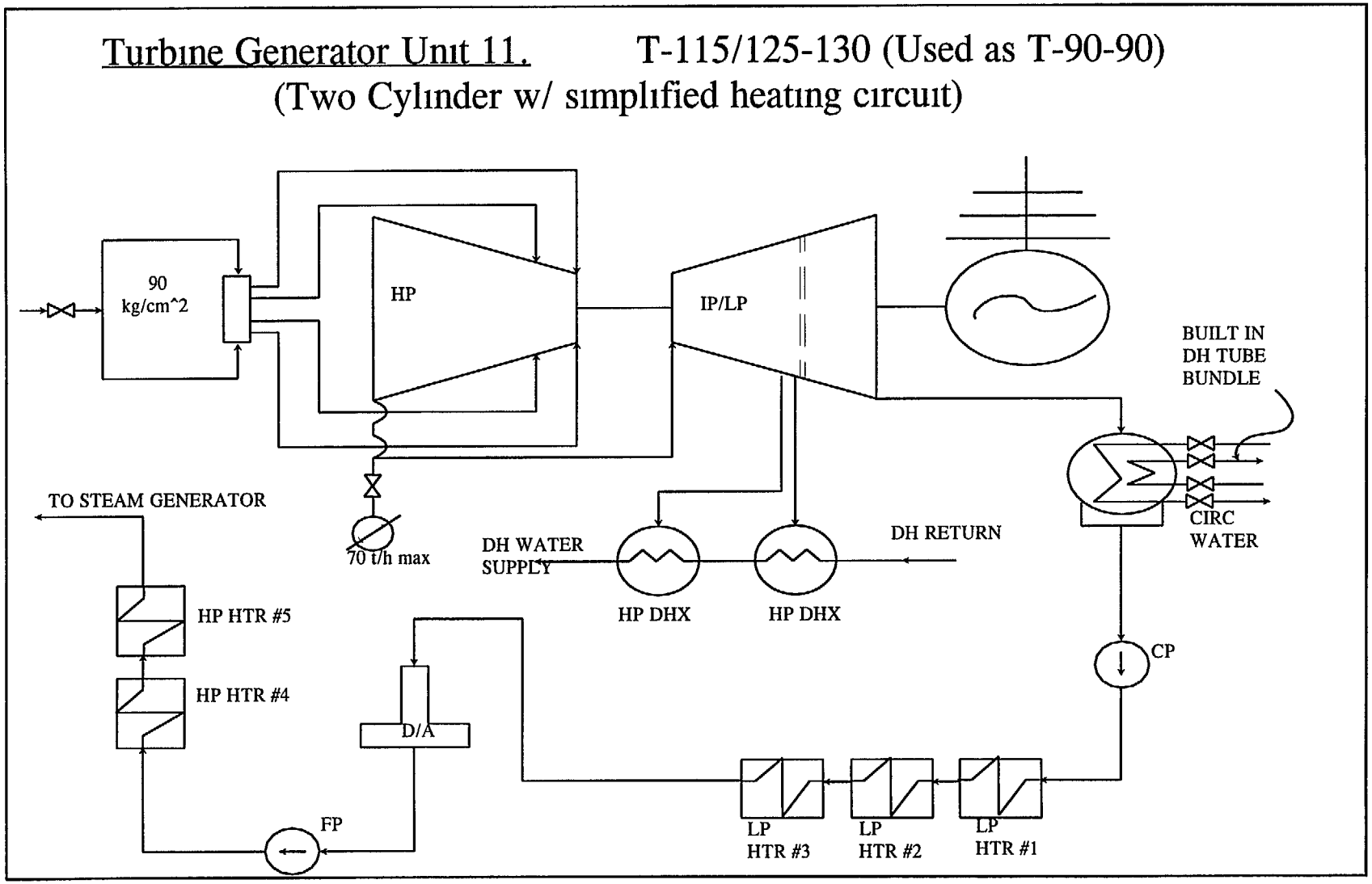

203

(d) Turbine Unit 11 Description

During the plant visit it was learned that a new steam turbine has been procured and is in storage during the last two years This turbine was obtained as a planned replacement for some of the older district heating units The turbine is a type T-115/125-130 model with two controlled heat extractions for district heating and for industrial steam supply The unit comes with a simplified regenerative feedwater heating circuit which allows the unit to be installed in existing power stations This cycle is simple compared to the other models of the same designation because one low pressure heater and one high pressure heater are removed from the regenerative feedwater heating circuit The schematic arrangement of the steam/feedwater cycle of this unit is shown in Figure 3-12

This simplified steam turbine can be furnished in three different configurations (Type 1, 2 or 3) depending on the number and length of the last stage blades The turbine in storage at the Bishkek Power Plant is a Type 1 and has 550 mm long last stage blades This turbine is most effective in the heating regimes of operation, where good economics are possible because of small losses at the low pressure stages during maximum heat loads In addition this unit has a condenser with built-in tube bundles which can be used to heat district heating water returning from the district heating network This Type 1 turbine is recommended to replace old 25-50 MW turbines with limited condenser steam flows

When the industrial steam extraction is used the electric power and heating load are decreased by about 9 MWe and 35 Gcal/h, respectively The turbine can also operate with limited steam extraction flow to the high pressure heaters This allows the increase of electrical and heating loads

The steam turbine is a single shaft machine, and consists of a high pressure and a combined intermediate pressure-low pressure cylinder with a single steam exhaust The high pressure cylinder has a counterflow arrangement with respect to the intermediate/low pressure cylinder The rotor has nine stages including the control stage The IP/LP section consists of three parts cast steam inlet part, a welded middle section, and a welded exhaust part

The T-115/125-130 turbine's control system is electro-hydraulic Compared to the old hydraulic systems the new system provides a wider range of automatic controls and increases the precision of maintenance of the controller parameters

Depending on the working mode of the turbine the control system can maintain within needed limits

- Frequency of rotor revolutions
- Electric load (power) of the turbine

- District heating water temperature in one of the heating stages
- District heating makeup water temperature at the outlet of the condenser's built-in tube bundle

The turbine is equipped with the protection systems and signal systems, and also with the remote control systems which are used in turbine operation

The turbine T-115/125-130 has technical and economical parameters on the same level as other modern heating turbines

It should be noted that as the model number indicates this turbine was designed to operate with initial steam pressures of 130 kg/cm^2 The pressure in the main steam headers in the Bishkek plant, however, is only 90 kg/cm^2 Nevertheless the turbine can operate with main steam pressure of 90 kg/cm^2 and main steam temperatures between 500 and 535°C, but the steam flow and power output will be reduced by about 20% compared to the original design

The thermal design performance data for this turbine are shown in Table 3-11 Expected operating data with reduced main steam parameters are shown in Table 3-12

TABLE 3-11
THERMAL DESIGN PARAMETERS OF TURBINE 11

Nominal Electric Power Output, MW	115
Nominal Thermal Output, Gcal/h	180
Turbine Type	T-115/125-130-1
Main Steam Inlet Pressure, kg/cm^2(g)	130
Main Steam Inlet Temperature, °C	555
Nominal Main Steam Flow, t/h	490
Maximum Main Steam Flow, t/h	500
Industrial Extraction flow, t/h	70
Industrial Extraction pressure, kg/cm^2	12 3-18 3
District Heating Extraction, Pressures	
Upper, kg/cm^2(a)	0 6-2 5
Lower, kg/cm^2(a)	0 5-2 0
Electrical Output in Pure condensing Mode of Operation, MW	80
Last stage blade length, mm	550
Condenser Cooling Water Temperature, °C	20-27
Cooling Water flow, m^3/h	8000
Cooling Surface of Condenser, m^2	3100
Length of turbine, mm	14455

205

TABLE 3-12

EXPECTED OPERATING DATA FOR UNIT 11

Main Steam Pressure,kg/cm^2 (g)	90
Main Steam Temperature, °C	535
Nominal Electrical Output, MW	90
Nominal Thermal Output, Gcal/h	155
Nominal Steam flow, t/h	400
Maximum Electrical Output in the Pure Condensing Regime, MW	75
Steam flow in Pure Condensing Regime, t/h	295
Maximum Electrical Input at Nominal thermal Output but HP heater out of service, MW	100
Maximum Thermal Output with HP heater out of service, Gcal/h	175
Maximum condenser pressure, kg/cm^2(a)	0 105
Condenser cooling water temperature, °C	27
Final feedwater temperature, °C	218
Cross Turbine Heat Rate in Pure Condensing Mode, kcal/kWh	2425

(e) Turbines Units 1 and 2 Assessment

The units 1 and 2 steam turbines are the oldest units operating at the Bishkek Power Plant By the end of 1994, Unit 1 has accumulated in excess of 236,000 operating hours Similarly components of Unit 2 were over their design operating life, this unit has accumulated over 239,000 hours of operation to date

The Unit 1 turbine experienced the most problems of all turbines Cracks were found in the surface of the turbine shell The inspection of metal conditions for these units were performed in 1980, 1985 and 1990 The cracks found were repaired by grinding out defects The major overhaul on the steam turbines are scheduled for every five years, with intermediate repairs scheduled for every three years However, the turbine rotor is only examined during major overhauls Overhauls should take about 33 days, but in reality the units are actually down 65 days In 1980, changes to the regulating stage and to stages 2, 3, 4, 5 and 6 had to be made due to wear In the following years, one of the control valves and the turbine steam inlet lines were replaced, due to wear In 1985, replacement of the tube banks of the high pressure and low pressure feedwater heaters were implemented In 1989, the unit had an emergency shutdown due to the break of all 152 blades of the 24th

206

stage This caused deformation of the 24th stage diaphragm The impingement of the broken blades on the condenser internals caused excessive damage including condenser tube breakage The condenser tubes were replaced and the blades of the 24th stage (last stage) were cut off

The Unit 1 condenser operates with deteriorated vacuum, and is used for heating district heating make-up water inside the condenser tubes Because of this, the unit operates fairly efficiently as far as fuel utilization is concerned despite the loss in capability due to a shorter expansion line This is further exacerbated by the reduction of main steam conditions (pressure, temperature) due to the inability of the boilers to produce sufficient steam (Actual average main steam pressure in 1993 shows about 7 5% lower value, but plant personnel indicated some extreme low values to 60 kg/cm^2 main steam pressure) In addition, due to the depletion of Zinc from the condenser tubes (Latun, a copper and zinc alloy) with the make-up water circulating in the condenser, the condenser often fails

While Unit 1 can operate with good fuel utilization efficiency when in service, its reliability is bad, and requires a lot of attention and maintenance This unit also experienced a lot of problems with its hydraulic control system in the past Most of the steam flow path components and regulating valves are in a worn-out stage The unit experienced 10 shutdowns in 1993 alone

Unit 2 has accumulated even more hours of operation than Unit 1 It is now operated in the region of deteriorated vacuum, as its condenser is also used to heat district heating makeup water It's 1993 record indicates somewhat better utilization factors (electrical and district heating capacity factors) than Unit 1 However, its overall reliability is not good due to the excessive wear of its components including steam leads to the nozzle boxes and degradation of regulating valves The plant is trying to maintain the equipment to their best ability and capital repairs and maintenance are done according to schedules The last capital repair and metal control examinations of turbine internals were done in 1990

Units 1 and 2 turbines should be removed from service as soon as possible after the commissioning of Unit 11

The electric generators on Units 1 and 2 have had no major operating problems, and are in satisfactory working condition

(f) Turbines Units 3, 7 and 8 Assessment

Unit No 3 is also relatively old, having accumulated in excess of 219,000 operating hours This unit suffered last stage blade erosion in the past and the last stage (28th stage) was replaced This unit has also lost some of its original output capability since the retrofit of its

207

condenser for dual purpose During the winter heating season, the unit is operating in the regime of deteriorated vacuum The condenser is used to heat district heating return water (temperature 50-55°C) by about 5-7°C When the condenser was modified for this purpose it was reinforced by the installation of ribs for additional strength, and the last stage blades of the turbine were shortened to 150 mm to avoid their further breakdown During summer season however, there is no return water from the town, and circulating water is used for condenser cooling

This unit while operated satisfactorily during the site visit had lots of problems previously (replaced high pressure rotor, replaced high pressure heater, replaced main steam leads to turbine regulating valves, replaced steam crossover pipes) The four regulating valves have been replaced in 1990 by new modern ones However, currently the condition of the high pressure rotor is not good and requires replacement, according to the metal control laboratory the rotor has some broken blades The condenser also must be retubed The metal of the turbine is checked at every 5 years (the last time in 1992) The unit also has a recurring problem with the rotor vibration especially at bearing No 2 at variable loads The construction and wear of the flexible coupling connecting the HP and IP-LP rotors contributes to this problem The unit is in need for replication type creep testing of the high pressure high temperature components

Both Units 7 and 8 have accumulated over 162,000 operating hours Both units have been converted to operate in the regime of deteriorated vacuum (in 1987 and 1981, respectively) The blades of the last stage (stage 28) were shortened to 150 mm length In 1986 there was an emergency shutdown due to a main oil pump failure The valve mounting hardware on the high pressure cylinder was replaced on both units Similarly, all the four regulating valves of the high pressure cylinder inlet were replaced on both units with modernized ones

During the capital repair of Unit 8 in 1979 after opening up the turbine cylinder, it was found that the previous repairs at all stages have developed cracks around half of the circumference of the stage with a cut depth of almost 1 mm This caused a sagging of the rotor The main steam lead bends were also replaced at Unit 8 The high pressure feedwater heaters were also replaced at each unit in 1989 and 1990 for Units 7 and 8, respectively Plant personnel indicated the most recent problem with Unit 7 is the high gland seal steam leakage at the front labyrinth seals of the high pressure section Unit 8 has low frequency vibration in bearings 1, 2 and 3 during operation with less than 50% of nameplate capacity This is caused by the wear of the spring coupling connecting the HP and combined IP-LP rotors

All three of these units are operating with an average cycle efficiency in the range of 65% to 70% (based on 1993 data) and with capacity factors in the range of 38 to 47% Unit 8 has the worst history of plant shutdowns with 11 startups during the year 1993

There has been no major operating problems with the electric generator for Unit 3 Units 7 and 8 have had problems with plugged tubes in the Gas Coolers of the electric generators In addition, the brushes, rotor rings, and exciter collectors are worn due to high coal dust content in the Machine Room

(g) Turbines Units 6, 9 and 10 Assessment

Unit 6 has accumulated about 194,000 hours of operation This turbine was converted to provide district heating steam in 1969, three years after its initial operation During the last 14 years, the following repairs and maintenance had taken place replacement of the main steam lead bends, changes of the last stage blading, replacement of the membrane seals, replacement of the mounting hardware of the stop valve and regulating valves, and replacement of the four regulating valves with modernized ones In 1989 the turbine had an emergency shutdown The blades of the 13th and 14th stages were broken, they had to be replaced The high pressure heaters were also replaced The unit was in satisfactory condition during the plant visit However, due to its advanced age this unit is in need of more frequent NDE and testing to prevent unplanned shutdowns in the future

The Unit 9 and 10 steam turbines are the newest units at the Bishkek Power Plant Their cumulative operating times are about 137,000 and 111,000 hours, respectively These units were also reconstructed to provide district heating extraction at 0 7-2 5 atmospheric pressure The generator rotor in both units were replaced in 1986 and 1982, respectively The main steam pipe bends in the steam leads were also replaced with parts of increased margin of safety All four regulating valves of the high pressure cylinder admission were also replaced with modernized ones in 1991 Both of these units are in good condition and operate reliably

No major operating problems have been seen with the electric generators of Units 6 and 10 In Unit 9, there have been some problems with plugged tubes in the Gas Coolers of the electric generators The high amount of coal dust in the Machine Room has also been linked with deterioration of generator components

(h) Turbines Units 4 and 5 Assessment

These units have both been converted to back-pressure units by removing or making ineffective the respective LP sections and condensers The remaining parts (HP sections) have accumulated total operating hours of 210,000 and 182,000 hours for Units 4 and 5, respectively

In 1978 the Unit 4 turbine underwent emergency repairs The problem was caused by water induction into the HP section from the then existing LP feedwater heater No 4 due to

breakage of six tubes As a result of this incident the rotor was deflected by about 0 43 mm The rotor was repaired by dressing In 1983 the main steam leads of the turbine were replaced, while in 1986 the last stage blades required replacement The HP feedwater heaters were also replaced during this year

In 1991 the last stage blades were shortened to 150 mm due to excessive last stage blade erosion, and the four governor valves were also replaced by modernized ones Finally in 1993, the entire unit was converted into backpressure operation, by the disassembly of the LP cylinder internals and the condenser Thus further problems with the LP blade erosion are avoided However, the lower part of the high pressure casing has developed cracks, which have been repaired by welding This turbine section has accumulated excessive operating hours and is in need of frequent inspection and NDE to ensure trouble free operation until it can be replaced A new startup oil pump also had to be installed due to the wear out of the original one

Unit 5 was also converted to backpressure operation similarly to Unit 4 Prior to this, this unit also experienced severe last stage blade erosion problems In addition, about four years after its initial startup, there was a fire involving this unit causing some damage to the turbine This unit was refurbished in accordance with the written order of the Ministry of Energy in 1969 The tube bundles of the high pressure feedwater heaters were replaced in 1987 The four governor valves on the high pressure cylinder were also replaced with modernized ones in 1991

The gas coolers on the electric generators have been experiencing tube pluggages Many tubes have been cleaned and replaced Also, the high amount of coal dust in the Machine Room has caused the deterioration of generator components

(i) Other Turbine Cycle Related Components Assessment

As noted above the condensers of some units have been converted to operate with district heating water make-up or district heating return water as the cooling water in the condenser tubes The various units with condensers and their cooling medium source are listed below

Unit 1	DH make-up water
Unit 2	DH make-up water
Unit 3	DH return or circulating water
Unit 4	N/A (back pressure unit)
Unit 5	N/A (back pressure unit)
Unit 6	Circulating water
Unit 7	DH return or circulating water
Unit 8	DH return or circulating water

Unit 9	Circulating water
Unit 10	Circulating water

The original physical parameters for the condensers operating with circulating water are shown in Table 3-13

Table 3-13 CONDENSER PARAMETERS
(Circulating Water Cooling)

Parameter	TG-1,2 K-2-2000-1	TF-3, 7,8 500KCS-45	TG-6, 9, 10 100 KCS-46
Cooling Surface, m^2	2000	3000	3000x2
Pressure in the Steam Space kgf/cm^2	0 03	0 06	0 035
P" of Cooling Water kgf/cm^2	4 5	3 5	1 0
Cooling Water Flow Rate, m/hr	5000	8000	16000
Hydrostatic Resistance (MWC)	2-8	3-6	3-6
Number of Water Flows	2	2	2x2
Number of Tubes	4420	5800	5800x2
Tube Length, mm	6050	6650	6650
Tube Diameter, mm	24/1	25/1	25/1
Weight without water, Tons	31 5	54 6	69x2
Weight of Condenser with Water in Water Area, Tons	48 5	74 6	95 5x2

Parameter	TG-1,2 K-2-2000-1	TF-3, 7,8 500KCS-45	TG-6, 9, 10 100 KCS-46
Weight of Condenser with Water in Water Steam Area, Ton	83	159 6	159 6x2
Cooling Water Temp Regular/Max, °C	20/33	20/33'	20/33

Whenever district heating heat input is derived from the main condenser, the corresponding units are usually operating in the regime of deteriorated vacuum Unit 3 is normally operating with district heating water in the condenser during high heat load conditions (winter) while during summer it may operate with circulating water The condenser tubes at the TES-1 power plant are made of a metal called Latun (L-68) which is a 32% Zn, 68% Cu alloy While the circulating water quality and the district heating water quality is relatively good, operation of the condensers with cooling water temperatures at or above 40°C (104°F) causes a depletion of Zinc of the tube material This bicarbonate caused problem requires periodic replacements (8-18 years) of the condenser tube bundle This condition mostly affects Units 3, 7 and 8, as the make-up water temperature is colder than the district heating water return temperature However the plant was experimenting with replacement of Unit 2 condenser tubes with another material called MNJ (Cu-Ni-Fe alloy with about 92% Cu) with satisfactory results The Zn-depletion problems could be solved by retubing the condensers with stainless steel material, however this may be expensive, and it is not absolutely necessary Actual operating pressures of the Unit 1, 2,3, 7 and 8 condensers operating in the regime of deteriorated vacuum, based on 1993 data are shown in Table 3-14

Actual operating data on condenser air inleakages indicates that in some cases the design air inleakage is exceeded by a factor of 2-3 times Based on 1994 plant data this happened in Units 3, 7, 8, and 10 It is therefore recommended that a formal air inleakage prevention program be implemented as the above units will see an increased number of operating hours with the retirement of Units 1 and 2 in the near future

TABLE 3-14
CONDENSER PRESSURES FOR UNITS
OPERATING IN THE REGIME OF DETERIORATED VACUUM

	UNITS				
MONTH	T-1	T-2	T-3	T-7	T-8
Jan	0 0514	0 0324	0 2436	0 2049	0 1282
Feb	0 0583	0 0408	0 2555	0 1804	0 1789
Mar	0 0614	0 0625	0 2249	0 2268	0 2337
Apr	0 0393	0 0613			
May		0 0553			
June					
July	0 0566	0 0438		0 0609	
Aug	0 0672	0 0349		0 0608	
sept	0 0519			0 0671	
Oct	0 0594	0 0506		0 1629	
Nov	0 0442	0 0503	0 1613	0 1476	0 2647
Dec	0 0372	0 0445	0 1627	0 1464	0 1475

Pressures are kg/cm^2 absolute

Many of the feedwater heaters in the regenerative feedwater heating trains of the various turbines have been replaced during the time of turbine maintenance Turbine maintenance usually occurs as follows

Small repairs	each year
Intermediate repairs	every three years
Capital repairs	every five years

Many times the maintenance periods are inadvertently extended due to the lack of spare parts and/or money According to discussions with plant maintenance personnel the condition of feedwater heaters are generally good Also plant personnel indicated that feedwater heaters were designed with sufficient margin so that 28% maximum plugging is allowed on the tube bundles

There are 19 steam generator feed pumps with capacity of 270 m^3/hr each, and 180 atmosphere discharge head Each pump is driven by a 2 MW electric motor Pump parts have been replaced during previous maintenance The pump impellers are made of stainless

214

steel material, and pump efficiencies almost didn't change during the last 8 years The pumps are in satisfactory condition

It is therefore recommended that the feedwater heaters, condenser, and pumps and valves be repaired/maintained as part of the plant's normal (standard) maintenance program

Because of the large number of steam generators and turbines the plant's "header type" main steam system requires a systematic monitoring program in order to prevent accidents as the plant is getting older and older The plant has initiated a monitoring program,based mainly on ultrasonic checking the wall thicknesses of elbows and pipe segments based on the number of hours of operation of the pipes (boiler main steam leads, turbine main steam pipes and the connecting jumpers and headers) connecting the various steam generators and steam turbines There are a large number of components (straight pipe segments and elbows) in each piping system For instance the main steam piping (size ϕ273 x 20) delivering steam from steam generators No 4 and 5 to turbine-generator No 3 contains 36 elbows and 6 tees this does not include the elbows and tees in the smaller (ϕ133 x 10) size auxiliary steam header in the vicinity of this unit There are certain "allowable operating hours" (called park resource) established by regulations which were applicable for power plant components in the former Soviet Union based on their operating conditions (pressure and temperature)

Many of the piping components have reached or are near their assigned operating hours and thus may require replacement, or an additional extension of park resource Such extension in many cases can be justified, but requires the checking and assessment of the condition of the metals While checking of wall thickness by ultrasonic testing is applicable,especially at the elbows, the microstructure of the steel should also be checked for creep degradation since these piping components operate at high temperature (and pressure) Such testing by using the replication technique was recommended during the plant visit These tests and inspections are usually performed by outside laboratories (such as the Ekaterinburg or the Tashkent laboratories) as the plant does not so far has the equipment to perform such tests However, price quotes obtained by the TES plant indicated that these tests are expensive because of the large number of components Nevertheless, it is strongly recommended that the condition of the main steam piping components, especially those delivering steam to Units 1 through 6, be assessed to establish a baseline from which any further degradation can be measured and monitored so as to prevent accidents

(j) Non-Destructive Examination and Metal Control of Critical Plant Components Assessment

As mentioned above the large number of equipment (24 steam generators, 10 steam turbines and the connecting piping system) represent an extremely large number of critical components (those which operate under high-temperature and high pressure conditions) The life of these components is limited by operating modes and various mechanisms such as

215

startups, shutdowns, load changes, temperature transients,high and low cycle fatigue and creep In addition,erosion, corrosion and other mechanisms also affect the operating life of tubes, pipes and heat exchangers

The most important parts, the conditions of which must be monitored are the thick walled pressure parts of boilers (superheater headers, the boiler drum, desuperheaters, etc), turbines (HP shell, IP shell, nozzle block, steam chest, valves, etc) as well as the main steam piping components The purpose of the monitoring is to avoid or minimize unplanned shutdowns due to equipment failure, to avoid potential accidents, and to be able to plan maintenance activities most effectively

The original lifetime planned for the TES-1 system component was about 100,000 hours However, as the equipment aged newer and newer allowable operating lives were certified by regulatory authorities in the former Soviet union countries Some examples of the allowable (or extended) lives which are currently in effect at the TES-1 plant are as follows

Component	Park Resource (hours)
Steam Generator Headers	200,000
Steam turbines shells	270,000
Stop and Control Valves	220,000
Steam Pipes	250,000
Main Steam Piping	
ϕ273 x 22 mm straight	270,000
ϕ273 x 22 mm elbow	170,000
ϕ273 x 20 mm straight	150,000
ϕ273 x 20 mm elbow	75,000
ϕ133 x 10 mm straight	200,000
ϕ133 x 10 mm elbow	120,000

The plant has conducted inspection and testing of various components, and metal control periods usually coincide with the capital repair and maintenance of the main plant equipment The various metal control periods and the corresponding accumulated operating hours from 1980 for the oldest steam generators (1 through 6) are shown in Table 3-15 A similar tabulation for the oldest steam turbines (Units 1 through 6) is shown in Table 3-16 The plant's metal laboratory also started to develop a log for all the thousands of components of the main steam piping system Their tabulation of data indicates that a large portion of these piping components has reached or are close to reaching the allowable park resource and,therefore, they must be checked for potential molecular or physical degradation This requires an increasing amount of time and resources as the plant is getting older

TABLE 3-15
METAL CONTROL PERIODS FOR STEAM GENERATORS 1 THROUGH 6

Year/Steam Generator No	1	2	3	4	5	6
1980	119,000				106,000	102,000
1981			118,500	114,500		
1982		119,000				
1983	137,000				125,000	120,000
1984			139,000	133,400		
1985		140,500				
1986					144,000	140,500
1987	164,000		158,000			
1988				160,000		
1989		167,000		163,000		
1990						167,000
1991			179,000			
1992				179,000		
1993	198,000	188,000				
1994					185,000	186,000
Total accumulated (End of 1994)	202,557	193,340	187,858	187,137	189,516	186,634

TABLE 3-16
METAL CONTROL PERIODS FOR THE UNITS 1 THROUGH 6 STEAM TURBINES

Year/Steam Turbine No	1	2	3	4	5	6
1980	140,000	133,000				
1981				133,000	108,000	
1982			137,000			
1983						123,500
1984						
1985	179,500	171,000				
1986				169,400	144,100	
1987			173,000			
1988						163 400
1989						
1990	211,500	211,300				
1991				207,000	173,000	
1992			205,000			
1993						192,000
1994						
Total accumulated (End of 1994)	236,100	239,300	219,500	219,500	185,500	193,400

Plant records indicated the defects found on the Unit 1 through 6 steam turbines shown in Table 3-17 All these defects have been repaired by the methods indicated in the last column of the table It is not unusual to find cracks in high pressure-high temperature components in older power plants, but their existence requires a more rigorous tracking and monitoring as the plant is getting older, and/or as the critical components undergo additional thermal transients which may occur in the load following mode in a district heating plant Monitoring of metal conditions and conducting NDE inspections can detect molecular changes in these components before macro-cracks occur

TABLE 3-17
DEFECTS FOUND ON UNITS 1 THROUGH 6 TURBINES

Turbine No	Year of Metal Control	Defect	Number	Location	Repair Method
TG 1	1990	Surface Crack		Outside of Control Valves	Grind and polish
		Surface Crack		Inside of HP cylinder	Weld and grind
TG-2	1990	Surface Cracks	2 2	Inner Surface of HP cylinder Inner Surface of HP cylinder	Grind Grind weld polish
		Surface Cracks	1	Outside surface of stop valve	Weld and grind
		Surface Cracks	3	Outside surface of stop valve	Grind and polish
		Crack	1	Control valve #1	Weld grind polish
		Crack	2	Control valve #1	Grind and polish
TG-3	1992	Surface Crack	1	Outside surface of HP cylinder	Weld grind polish
TG-3 (Cont d)		Surface Crack	4	Outside surface of HP cylinder	Grind polish
		Surface Crack	1	Inner surface of HP cylinder	Weld grind polish
		Surface Cracks	8	Outside surface of Control Valve #1	Grind polish
		Surface Cracks	2	Outside surface of Control Valve	Grind polish
		Surface Cracks	2	Outside surface of Stop Valve	Grind polish
TG-4	1986	Cracks		Frame and Cover of HP cylinder	Weld grind polish
	1991	Surface Cracks		Inside surface of HP cylinder frame	Grind and polish
		Surface Cracks		Outside surface of HP cylinder cover	Grind and polish
		Surface Crack		Inside Surface of HP cylinder cover	Grind and polish
		Surface Crack	1	Outside of Control Valve #1	Grind weld polish
		Cracks and Cavity	2	Outside Surface of Control Valve #2	
		Surface Cracks		Outside Surface of Control Valves #3 and #4	Grind and polish
		Surface Cracks		Outside of Stop Valve	Grind and polish

Turbine No	Year of Metal Control	Defect	Number	Location	Repair Method
		Cracks		Gate Valves	Weld grind polish
TG 5	1986	Surface Cracks	4	Outside of Control Valve #3	Grind polish
		Surface Crack	1	Control Valve #4	Grind polish
		Surface Crack	1	HP Cylinder cover	Grind polish
	1991	Surface Cracks	2	HP cylinder frame	Grind polish
		Surface Cracks		Outside surface of Gate Valve	Grind polish
TG-6	1993	Surface Crack	2	HP cylinder frame	Grind polish
		Cracks	4	Control Valve #4	Grind polish

Nondestructive inspections of components of fossil plants are usually conducted because they result in significant economic benefits to the utility These benefits can result from one or more of the following outcomes

- reduced forced outages
- avoided catastrophic failures
- increased life
- planned replacements
- reduced maintenance costs

The type of economic benefit derived from an inspection depends on the component Boiler tube inspections reduce forced outages and therefore result in a large economic payoff Turbine bore inspections detect discontinuities whose size is then used to determine if the shaft life can be extended beyond its design life The results of condenser inspections are used to plan replacements of tubes The optimum time of replacement is usually not the design life but depends on the amount of pitting/flaws in the tubes Thus, as previously mentioned, the philosophy and types of benefits derived from inspections depends on the component, and proper selection and application of the nondestructive testing (NDT) method is key to such an economic payoff

Utilities are performing equipment maintenance primarily in response to failure or according to a time schedule However, when repairs can be made earlier, they are usually simpler and require less downtime or if the equipment is known to be in good condition, scheduled maintenance can be omitted

Predictive methods enable utilities to increase the efficiency of their maintenance activities Predictive maintenance (PDM) is a program that includes equipment history, monitoring, analysis, scheduling,and documentation It also coordinates maintenance resources with operations The results target equipment maintenance that could compromise performance or safety, prevent excessive inspections and repairs, and has minimum impact on power and thermal energy production

The inspection of plant equipment encompasses the monitoring and testing of many components Some of the types of inspections that are expected in the TES-1 power plant will include those listed in Table 3-18

In order to accomplish all testing that are required, and to do it in an efficient way,it is necessary that the plant laboratory be equipped with modern western testing equipment It is recommended that the following equipment be procured by the plant

Ultrasonic flaw detectors
Ultrasonic thickness gages
Magnetoscope
Spectrum analyzer
Portable microscope
Electronmicroscope for Metallurgy
Hardness testers
Boroscope
Videoscope
Eddy current inspection devices
Thermographic Inspection Equipment
Radiographic Equipment
Equipment for Replication Method Realization

Table 3-18

Types of Inspections Required at TES-1

Boiler Inspections

Boiler Headers, Drums
- Detection of Ligament Cracking
- Creep testing

Boiler Tube Inspections
- Ultrasonic Detection of Corrosion Damage and Cracks

221

Ultrasonic and Eddy-Current Measurement of ID Scale Thickness
Ultrasonic Thickness Scanning
Inspection of Dissimilar Metal Welds
Leak Detection

Turbine Inspections

Boroscopic Inspection of Turbine Shafts
Ultrasonic Inspection of Disk Keyway
Ultrasonic, Eddy-Current, and Magnetic Particle Inspection of Disk Steeple Cracking
Eddy-Current Inspection of Blade Roots
Magnetic Particle and Eddy-Current Inspection of Blades
Magnetic Particle Inspection of Rotor Body and Nozzles
Ultrasonic Inspection of Study Bolts and Tenons
Ultrasonic and Eddy-Current Inspection of Retaining Rings
Replication for Detection of Creep Cavitation

Steam Piping Inspections

Ultrasonic and magnetic Particle Inspection of Steam Lines
Replication for Detection of Creep Cavitation

Condenser and Feedwater Heater Inspections

Eddy-Current Inspection of Nonferromagnetic Tubing
Ultrasonic Wall Thickness Measurement of Heater and Condenser Tubing, and Inlet Nozzles

Utilization of the above equipment is expected to greatly increase the efficiency of operation of the metal laboratory in monitoring and controlling the condition of the critical components and other equipment in the TES-1 plant

3 2 3 Material and Energy Balances for the CHP Plant and DH System

(a) Thermal Cycle of the Existing Plant

There were no heat balance diagrams available for the various turbines operating at the TES-1 plant In addition, due to the actual plant modifications performed on the various turbines, many of them are not operating at their original design conditions Some of the main parameters (such as turbine main steam flow) are not measured at the plant The

222

development of an actual heat balance for the entire plant is a very complex task because of the large number of steam generators, turbines of different design, main district heating heat exchangers, peaking district heating heat exchangers, pressure reducing valves, industrial steam supply and hot water peaking boilers as well as the regenerative feedwater heating trains associated with the individual steam turbines Nevertheless, the plant is monitoring most of the parameters which enable the plant to calculate the energy input and thermal and electrical output so that plant efficiency or specific fuel utilization can be determined Burns and Roe has obtained a set of operating data for each month of the 1993 year The data obtained for the various components (steam generators and turbines) includes average boiler steam flows, heat input to the steam cycle, operating hours for the steam generators, steam temperature and steam pressures, turbine operating and standby hours, thermal output from the steam turbines for district heating and for industrial needs, as well as the heat pickup for district heating water circulating in the condenser of some of the district heating turbines which operate in the regime of deteriorated vacuum and final feedwater temperatures associated with the feedwater heating cycles of the steam turbines In addition, the total electrical energy generated, the average electric output, and the turbine gross heat rate (or rather the specific fuel utilization) are also provided for each of the operating turbines

In order to determine the mass balance it was decided that the steam flows leaving the steam generators will be compared to the steam flows that enter the steam turbines However, as noted above steam flows entering the steam turbines were not provided This therefore led to a series of heat balance calculations for the operating steam turbines, utilizing the available data to determine steam flows For the purposes of calculations the operating data available for the month of January 1993 were selected, because the review of the twelve monthly operating conditions indicated the maximum heat inputs and outputs in this month

Both the available boiler steam flows and the calculated turbine steam flows were inserted in this figure together with the actual main steam parameters and various thermal and electrical outputs It is important to note that the numerical values shown on this schematic are average figures With the exception of Unit 4 and 6 the steam turbines were continuously operated during this coldest month (for 744 hours) However, the steam flows shown for the steam generators are average <u>for the time</u> they actually operated These hours and steam flows are shown in Table 3-19

TABLE 3-19
Steam Generator Operating Steam Flows

Boiler No	Average Steam Flow (T/h)	Operating Hours (hours)	Total Steam Generation (tons)
1	83	744	61,752
2	87	744	64,728
3	-		
4	89 5	625	55,937 5
5	98	466	45,668
6	91	744	67,704
7	101	697	70,397
8	86	677	58,222
9	115	655	75,325
10	-		
11	116	139	16,124
12	120	598	71,760
13	138 5	200	27,700
14	162	507	82,134
15	175	577	100,975
16	132	519	68,508
17	180	470	84,600
18	164	452	74,128
19	154	109	16,786
20	175	563	98,525
21	-		
22	128	616	78,848
23	170	555	94,350
24	155	744	115,320
			1,429,492/mo

Based on this, the average steam flow of all steam generators for the same 744 hours of turbine operation is

$$\text{Total Average Boiler Steam Flow} = \frac{1429492}{744} = 1921 \text{ ton/h}$$

On the other hand, the actual average steam flows for the various turbines obtained from the individual heat balance calculations are as follows

Steam Turbine No	Throttle Steam Flow (t/h)
Unit 1	87
Unit 2	107
Unit 3	226
Unit 4	0
Unit 5	282
Unit 6	0
Unit 7	251
Unit 8	270
Unit 9	336
Unit 10	307
Total	1866 t/h

Therefore, the total of the calculated flows for the steam turbines and the total average steam flows of the steam generators are within 2 9%, and the difference may be attributed to leakages and occasional operation of the pressure reducing stations to provide steam for the industrial steam header The calculations of the steam flows into the turbine took into effect the actual enthalpies which are based on the deteriorated main steam parameters achievable in actual operation

In order to determine the steam turbine cycle (or gross) efficiency, the total heat transferred by the steam generators to the steam/feedwater cycle must be known These heat outputs of the individual steam generators are shown in Table 3-20 Based on this table the average total heat transferred to the steam/feedwater cycle is

$$A_{St} = \frac{877662}{744} = 1180 \text{ Gcal/h}$$

Looking at the numerical values of outputs shown in the schematic diagram we can summarize that total energy outputs as follows

TABLE 3-20

Heat Output of the Steam Generators
(January 1993)

Stm Gen No	Average Heat Output (Gcal/h)	Operating Hours (hours)	Total Heat to Cycle (Gcal)
1	51	744	37,944
2	54	744	40,176
3	-	-	-
4	55	625	34,375
5	60	466	27,960
6	56	744	41,664
7	62	697	43,214
8	54	677	36,558
9	72	655	47,160
10	-	-	-
11	77	139	10,703
12	75	598	44,850
13	91	200	18,200
14	96	507	48,672
15	104	577	60,008
16	78	519	40,482
17	108	470	50 760
18	98	452	44,296
19	95	109	10,355
20	109	563	61,367
21	-	-	-
22	79	616	48,664
23	106	555	58,830
24	96	744	71,424
		Total	877,662/mo

Electrical Output	328 8 MW
District Heating Output	498 3 Gcal/h
Industrial Heat Output	188 Gcal/h

Thus the total thermal output of the turbines is 686 3 Gcal/h and therefore the gross overall cycle efficiency can be determined as

$$\text{Gross Turbine Cycle Efficiency} = \frac{\text{Electric Output and Heat Output}}{\text{Heat Input to Steam Cycle}}$$

or

$$\eta_{\text{gross Turb}} = \frac{328800 \times 860 + 686\ 3 \times 10^6}{1180 \times 10^6}$$

$$\eta_{\text{gross Turb}} = 82\%$$

Utilizing the above figures it is also possible to determine the average specific heat utilization of the steam cycle that is changeable to the generation of electric power

$$\text{Heat Chargeable to Power (HCP)} = \frac{(1180 - 686\ 3) \times 10^6}{328{,}800}$$

$$\text{HCP} = 1501 \text{ kcal/kWh}$$

It should be noted that the above figure takes into account heat losses between the steam generators and the steam turbines However, the above numbers do not take into account boiler efficiencies and auxiliary power consumptions Also, the schematic diagram shows heat outputs for the existing hot water boilers, which are also not included in the above calculations of the steam turbine cycle

(b) Rehabilitated Cycle

In the existing cycle the efficiencies of the steam generators were relatively low, about 85 to 87 percent, and the design main steam flow could not be generated due to the degraded quality of coal available at the plant during the past several years This coal also caused problems at the mills as it was described above Plant personnel indicated that the reduced thermal and electrical output capability of the plant is basically caused by the condition and operation of the steam generators and not by the turbines When the steam generator steam producing capability is restored, increased output from the turbine plant is possible, as the main steam parameters (pressure, temperatures) will again be at turbine design conditions

When the new Unit 11 turbine is installed the electrical output capability of the plant will increase by about 90 MW and the heat supply capability will increase by 155 Gcal/h The original design electric outputs and the restored output capabilities of the various steam turbines following the addition of the Unit 11 turbine together with thermal output capabilities are shown in Table 3-21

TABLE 3-21

TURBINE GENERATOR OUTPUT CAPABILITIES

Turbine	Nominal Original Output (Design) MW	Restored Electric Capability, MW	Nominal Heat Output, Gcal/h	Nominal DH Load, Gcal/h	Nominal Ind Load, Gcal/h	Main Steam Flow, t/h
Unit #1	25	35	122	35	87	240
Unit #2	25	25	48 6	48 6	-	150
Unit #3	50	50	151	51	100	337
Unit #4	100	35	97	97	-	200
Unit #5	100	35	97	97	-	200
Unit #6	100	86	102 6	102 6	-	408
Unit #7	60	60	164	61	103	402
Unit #8	60	60	164	61	103	402
Unit #9	110	86	102 6	102 6	-	408
Unit #10	110	86	103	103	-	408
Unit #11	115	90	155	155	70	400
	Total	648	1306 8	913 8		3555

228

This table indicates that the total steam flow required by the steam turbines under nominal conditions in the restored plant will be 3555 ton/h Such steam flow capability must exist in the steam generators of the refurbished plant It is planned to refurbish the eleven BKZ 220-100 steam generators to their original design condition This will thus have a combined output capability of 2420 t/h Looking at the schematic diagram of the plant and assuming none of the 160 t/h boilers are restored to their full steam flow capabilities, but assuming Boilers 3 and 10 can produce at least 87 and 115 t/h steam flow respectively, the total average (January) steam flows obtainable from these boilers is 1328 t/h Thus the total steam flow from all boilers with the above assumptions will be 3748 t/h, which is greater than the maximum flow of 3555 t/h required by the steam turbines It should be noted that this is a conservative estimate since even if Units 3 and 10 were not producing any steam,the steam flows would be within less than 0 3% tolerance Furthermore, the steam flows of the "160 ton/h" boilers shown on the schematic diagram are average steam flows for the month and are not the maximum flows that they are able to generate

In addition, due to their advanced age, the steam turbines No 1 and No 2 will be removed from service before the year 2000 At that time the total steam flow requirement of the steam turbines will be reduced to 3165 t/h, and the steam boilers will easily be able to meet the needs of the steam turbines

Various scenarios for the different phases of plant rehabilitation have been developed together with corresponding thermal output, electrical output and steam cycle heat input figures These are utilized and further described in the economic evaluation section of this report

3 2 4 Assessment of Air Pollution Control System

(a) Overview

Emissions of particulates, sulfur dioxide (SO_2) and nitrogen oxides (NO_x) and the impact of these emissions on ambient air quality are of concern to the TES Dust collection equipment is provided to remove a portion of the fly ash from the flue gas before discharge and minor reductions in SO_2 and NO_x emissions are achieved by injection of alkali into the flue gas The original plant design utilized three (3) 180 meter high stacks to achieve dispersion of the flue gas A new, 300 meter stack has been constructed for the purpose of improved flue gas dispersion and nine (9) of the 24 boilers have already been ducted to the new stack

(b) Estimated Flue Gas Emissions

When firing coal of the composition described in Paragraph 3 1 1, the calculated uncontrolled emissions of SO_2 and particulates are as follows

Coal Source	Karaganda Coal	Tash-Kumar Coal
SO_2 Emission, g/GJ (mg/Nm^3)	540 (1545)	605 (1731)
Particulate Emissions, kg/GJ (g/Nm^3)	23 1 (66 0)	33 0 (94 5)

Based on these rates, SO_2 emissions from the BKZ-160-100 boilers would be expected to be on the order of 240 to 270 kg/hr when operating at MCR While uncontrolled SO_2 emissions would not be considered excessive, particulate emissions clearly require effective controls

NO_x emissions from boilers are more difficult to estimate Emissions can not be estimated from fuel analysis alone, since boiler and firing system design and distribution of combustion air and fuel play a major role in NOx production The NO_x emissions from the each of the BKZ 160-100, tangentially fired boilers, are estimated at 700 mg/Nm^3 (250 g/GJ)

Based on these emission rates, SO_2 emissions from the BKZ-220-100 boilers would be expected to be some 40% greater (336 to 380 kg/hr) when operating at MCR NO_x emissions from the BKZ 220-100, wall fired boilers, would be expected to be somewhat higher than for the tangentially fired boilers (850 mg/Nm^3 or 300 g/GJ)

(c) Reduction of Particulate Emissions

Each of the thirteen BKZ 160-100 boilers is equipped with venturi wet-scrubbing systems with particulate collection efficiencies of 95-96% There are no major operating problems, only routine maintenance requirements

Test data collected in 1994 for the BKZ-160-100 boilers, when firing a coal with an ash content of 36 5% gave the following results

	kg/hr
Ash in Flue Gas to Wet Scrubber	9,650
Ash in Flue Gas from Wet Scrubber	378 9
Wet Scrubber Ash Collection Efficiency, %	96 1

No modifications or improvements are planned for this equipment

Each of the eleven BKZ 220-100 boilers is equipped with two (2) 50% electrostatic precipitators for particulate collection Each precipitator has four fields (8 total) but the precipitators are not identical The older units are equipped with plates 7 5 meters in height while the newer units utilize 12 meter plates In addition, the newer units incorporate provision for rapping each field independently while the older units rap two (2) fields at a time Test data collected in 1994, when firing a coal with an ash content of 31 4 % gave the following results

	kg/hr
Ash in Flue Gas to ESP	10,111
Ash in Flue Gas from ESP	312 8
ESP Ash Collection Efficiency, %	96 9

For this test, the estimated particulate emissions, based on gas flow from the ESP is about 700 mg/m^3

These precipitators were scheduled for rehabilitation but work has been delayed due to lack of funding TES would demolish the existing precipitators and replace them with new units with a somewhat higher particulate collection efficiency (up to 98%) It should be noted that the estimated particulate concentration emitted from these units is 2 64 grams/Nm^3 when firing Karaganda coal assuming the ESP is operating at an efficiency of 96% (1 32 grams/Nm3 for 98% efficiency), whereas an ash removal efficiency in the range of 99 8% would be required to achieve the particulate emission concentration of 150 mg/Nm^3, proposed for rehabilitated thermal units in Russia

The efficiency of the precipitators could be probably be improved further by utilizing an advanced (Western) design (increased plate height) but not to 99 8%

(d) Reduction of SO_2 Emissions

Some attempt is made at reducing SO_2 emissions by injecting alkali boiler drum blowdown into the boiler It was estimated that this resulted in a 20% reduction in SO_2 emissions when compared to the uncontrolled emission level

(e) Reduction of NO_x Emissions

Refurbishment of the BKZ 220-100 boilers will include the replacement of the burners with Low NO_x burners In addition, the injection of alkali boiler drum blowdown into the boiler is claimed to reduce NO_x emissions by some 15-16%

(f) Increasing Stack Height

Increasing the stack discharge elevation will provide for improved flue gas dispersion and lower ground level concentrations of pollutants As pointed out above, flue gas ductwork has been partially modified and nine (9) BKZ 220-100 boilers (15, 16, 18-24) are presently connected to the new 300 meter stack The stack has provision for accepting flue gas from all 24 boilers and TES would like to complete the program of redirecting the flue gas from the two (2) remaining BKZ 220-100 boilers and the thirteen (13) BKZ 220-100 boilers to the higher stack

23'

(g) Emission Monitoring Equipment

At present the plant operating staff has no device(s) for measuring, monitoring or reporting the level of pollutants in the flue gases discharged into the environment In keeping with the plan to duct all boiler flue gas to a common stack, it has been suggested that this stack be equipped with an emission monitoring system (CEMS) This single analyzer would measure and record opacity (measure of dust emission) and SO_2, NO_x and CO_2 emissions Combining these measurements with measurement of flue gas flow in the stack will result in the capability of reporting mass emissions (discharge) of these pollutants to the atmosphere The CEMS can also be utilized to monitor the environmental performance of the plant Increases in opacity or NO_x, for example, would indicate that one or more of the boilers requires an adjustment in operating conditions or some maintenance If all boilers are not ducted to a common stack, two (2) CEMS can be installed

(h) Ash Disposal

Fly ash and bottom ash from all the boilers is collected, and pumped to the ash disposal area The ash transfer pipes require substantial maintenance Deposits on the inside pipe wall buildup and limit flow Pipe sections are removed for cleaning on a routine basis When examination indicates significant erosion has occurred, the section is replaced This cleaning operation is essentially a continuous process The number of transfer pipes provided permits one to be out of service for cleaning and one on standby while still maintaining capability to transfer all of the ash produced Ash transfer pumps also require maintenance and pumps are rebuilt as required This maintenance is carried out by the plant maintenance staff

Information provided by TES indicates that 2,681,600 cubic meters of ash have been deposited in the ash disposal area through 1994 Although the "design" ash production rate is 400,000 cubic meters per year, the ash deposition rate has averaged about 215,500 tonnes per year for the last 5 years

The following table gives information on the ash disposal sites for TES #1

Year	Ash Output	Amount Sold to Consumers*	Stored at Site	Cumulative Storage at End of Year
1989	385 7	139 7	246 0	1604 2
1990	297 3	139 5	157 8	1762 0
1991	297 7	104 4	193 3	1955 3
1992	317 1	75 2	241 9	2197 2
1993	283 5	21 0	262 5	2459 7

1994	222 9	1 0	221 9	2681 6

NOTE All ash quantities are in thousand cubic meters

*For cement and brick making

The present site has a remaining capacity of only 4-6 years and plans have been developed to expand the disposal area Construction of two new disposal ponds, numbers 12 and 13, will provide for ash disposal for an additional 10 years of operation

As described previously, water entering the ash pond is discharged via a standpipe The water is untreated, except for settling of the solids The water is discharged to a canal and is apparently used for irrigation Analysis of the discharge water was provided, on a monthly basis, for the calendar year 1989 The water is low in suspended solids, chlorides and sulfates but heavy metals analysis was not included The pH of the water ranges from 8 4 to 10 9, with an average pH of 9 0 Apparently the discharge quality is acceptable to the local authorities and TES believes the water is quite pure

3 2 5 Assessment of Coal Handling System

Bishkek TES plant consumes coal that is transported by railroad in 60 ton capacity railroad cars Cars are weighed before unloading using model 1959 TS-200B scale made in Odessa by "Tochmash" Company Unloading of rail cars is accomplished by means of a rotary car dumper There are two car dumpers, each capable of dumping 25 railroad cars per hour During the winter time coal cars are defrosted in a heated building which can provide defrosting of up to 12 cars simultaneously Defrosted coal is fed into coal crushers model No DFM-7 for crushing

The coal is transported from the coal dumping car area by belt feeders to belt conveyors Nos 5 and 17 The width of the feeder belts and conveyor belts are 1600 mm and 1400 mm respectively Lengths of the conveyor belts Nos 5 and 17 are 102 meters each

From conveyor belt No 5, the coal is transported to the "Reserve" storage pile through conveyors Nos 19, 20 and 21 and through overlapping joints Nos 9, 11 and 12, or transported to conveyor No 6 for feeding into conveyors Nos 7A, 7B, 8A, 8B, 9A, 9B, 3A, 3B, 10A and 10B and boiler burners overlapping joints Nos 2, 3, 4 and 8

Conveyor No 17 is also connected with the "Reserve" storage through conveyors Nos 19, 20 and 21 and also connected to the boiler bunkers through conveyors Nos 18, 6, 7A, 7B, 8A, 8B, 9A, 9B, 3A, 3B, 10A and 10B Conveyors Nos 11 and 13 receive coal from conveyors Nos 8A and 8B through overlapping joints No 4, and transports it to the "Reserve" ("Western") storage Coal from the "Reserve" storage is transported to the boiler

bunker by conveyors Nos 22, 23, 24, 25, 8A, 8B, 9A, 9B, 3A, 3B, 10A, and 10B and through overlapping joints Nos 13, 15, 3 and 8

Coal from "Everyday use" ("Eastern") storage is transported to the boiler bunker by conveyors Nos 16, 7A, 7B, 8A, 8B, 9A, 9B, 10A and 10B, and from "Reserve" ("Western") storage by conveyors Nos 14, 8A, 8B, 9A, 9B, 3A, 3B, 10A and 10B

The following table lists widths and lengths of various conveyor belts

Conveyor #	Belt Width (mm)	Belt Length (m)
#3A,B	1000	150
#6	1400	26 5
#7A,B	1200	98
#8A,B	1200	63
#9A,B	1200	160
#10A,B	1200	380
#11	1400	112
#12	1400	155
#14	1200	130
#16	1200	46 5
#17	1400	102
#15	1200	155
#18	1400	27
#19	1400	120
#20	1400	115
#21	1400	275
#22	1200	180
#23	1200	190
#24	1200	124
#25	1200	85

The estimated coal storage capacities of various coal storage areas are as follows

Reserve Coal Storage Pile	370,000 Tons
"Everyday use" ("eastern") coal storage pile	30,000 Tons
"Reserve" ("western") coal storage pile	50,000 Tons

Bulldozers feed coal into the primary conveyor bunkers There are 8 bulldozers with T-130 tractors, 1 bulldozer with a T-180 tractor, and 4 bulldozers with a T-330 tractor for coal handling at the plant site

Diesel locomotives are used to move the coal cars, push cars into coal dumpers, and return empty cars to the railroad There are a total of 5 diesel locomotives

2.34

Main Problems in the Operation of Coal Handling System

The coal car dumping mechanisms are worn out to the limit, and the lack of spare parts are the main problems with the coal handling system (manufacturing of this type of equipment has been stopped) The existing coal car dumpers do not have enough load carrying capacity The car dumpers were designed for 60 ton capacity cars and are being used for 90 ton and 120 ton capacity railroad cars The second problem is unsatisfactory delivery of spare parts for diesel locomotives and bulldozers because of broken ties with vendors due to breakup of the former soviet union

The existing TES belt conveyors are equipped with 9 hanging and 2 shaft type magnetic separators There is no separation of ball shaped and non-magnetic scrap For coal feed metering a scale manufactured by "Tochmash" in Odessa City is used at the present time Conveyors 9A,B are equipped with scales, but there are no scales for car weighing in the coal dumping mechanism area

3 2 6 Assessment of Other Plant Systems

Discussions were held with the Bishkek TES plant personnel regarding any operational problems with other plant systems Based on these discussions and Burns and Roe's further evaluation, the systems described below are identified as having operational difficulties and/or capacity shortages

(a) Plant Compressed Air System

The Bishkek plant compressed air system provides plant instrument air and service air requirements The instrument air is dried in air dryers to remove the moisture before it can be used by the plant instruments and control system

The plant service air system is used for pneumatic transport of fly ash in addition to other service applications Oil free air is required for transporting the hot boiler fly ash to minimize the fire hazard and potential explosion in the ash transport system The Bishkek Power Plant presently has four (4) reciprocating (piston) type compressors with a capacity of 30 cubic meters/minute The compressors model number is VP-30/8 and their discharge pressure is 8 kgs/cm^2

Two of the plant existing four compressors are broken down, and the spare parts for repair are not available This is because the compressor model is very old, and the manufacturer no longer manufacturers this particular products

The plant requires to install two (2) rotary screw type air compressors of the oil free design with a capacity of 100 cubic meters/minute each at an air discharge pressure of 9 kgs/cm^2 This increased compressed air capacity would enhance the plant operations and pneumatic transport capability of boiler fly ash

2-5

(b) District Heating Makeup Water System

The Bishkek TES plant has its own makeup water demineralizer systems for the plant steam boilers, and to meet the district heating makeup water requirements The total capacity of steam boiler makeup water system is 780 cubic meters/hour

The makeup water for the district heating system is supplied from a city water source The present district heating system makeup water rate is 2600 cubic meter/hr

The water analysis for the makeup water is as follows

Hardness	-	3 9 mg-equivalent/1
Alkalinity	-	3 25mg-equivalent/1
Calcium	-	3 0 mg-equivalent/1
Magnesium	-	0 9 mg-equivalent/1
Sodium	-	19 mg/l
Sulfates	-	41 mg/l
Chlorides	-	12 mg/l
Nitrates	-	11 4 mg/l
Silica	-	15 mg/l
Iron	-	0 68 mg/l
Total Solids	-	315 mg/l

The makeup water purification system consists of three blocks of equipment, that is block number I, II and IV Each block of equipment consists of weak acid cation units, decarbonators and decarbonized water pumps The makeup water processing rate for blocks I, II, and IV are 450 to 600 m^3/hr, 600 to 900 m^3/hr, and 1260 m^3/hr respectively The district heating makeup water system removes hardness associated with alkalinity and carbon dioxide from the makeup water

3 2 7 Assessment of Plant Instruments and Controls (I&C)

Process Control Description

Control systems for both the BKZ-160-100 and BKZ-220-100 boilers are similar in design and function

(a) Load Control

These units use a conventional mechanical turbine governor with a centrifugal speeder gear to vary the load setpoint The accuracy of the device is about 4% The boiler pressure controllers are used to vary the fuel flow rate to the boiler The pulverized coal fuel is stored in an intermediate hopper and the transport medium from mill to hopper and from

236

hopper to burner is air from the air heater There is no oxygen dilution for the transport air, but they have never had any explosions in the fuel preparation system

The firing system burners are positioned in the furnace sidewalls, and each sidewall has two pulverized coal/primary air injection ports with the secondary air injection ports positioned above and below each port Coal must be delivered in equal amounts to each burner, even under low loads Coal flow is controlled by volumetric feeder speed

All boilers are equipped to fire natural gas at full load since there is a seasonal natural gas surplus No method is used to determine gas heating value beyond laboratory analysis Since there is no automatic flame monitoring system, the flame is monitored visually and when off-normal, the primary air is adjusted to achieve complete combustion

Because the coal caloric content is so low and ash content so high, mazut is sometimes co-fired with the coal in order to meet the boilers steam demand There are no instruments installed to determine mazut flow to the boilers, nor are there instruments installed to measure mazut tank level

Combustion control of the boilers is provided manually by the operators according to established procedures and are based upon adjustment and testing Excess air, the main indicator of performance, is monitored by measuring the oxygen content of the flue gas after the superheater Oxygen content is displayed on the boiler control board Additional indicators of excess air are air-side resistance of the air heaters and air pressure after the forced draft fan Vacuum in the upper section of the furnace is also used as a combustion performance indicator There is an automatic combustion control system in place, but it is not used because it is unreliable

(b) Air Flow Control

This is purely a manual function carried out by varying the position of the forced draft fan radial inlet vanes remotely from the control room An 0_2 indicating system fed from an oxygen analyzer assists the unit operator in setting the correct combustion air flow rate Each of the two 50% forced draft fans are electric motor driven, centrifugal type with radial flow Station personnel expressed interest in automating this function The original oxygen analyzers are extractive type and consequently slow acting Some boilers have fast response oxygen analyzers

(c) Furnace Pressure Control

There is no automatic control of furnace pressure The position of the induced draft fan radial inlet vanes is varied remotely from the control room to adjust the value of the furnace pressure Normal vacuum is 3-5 mm Hg

The two induced draft fan loads must be balanced to prevent choking of the burner flame The balancing of the fans is measured by the two induced draft fan ammeters, and by the vacuum meters upstream of the fans The two 50% induced draft fans are electric motor driven, constant speed, centrifugal type, radial flow

(d) Steam Temperature Control

Steam flow is divided into two parallel paths, with steam crossovers at the first and second spray attemperator stages There is an attemperation system in the parallel steam paths to the first and second stage desuperheaters using spray water attemperation valves each with its own dedicated controller The spray water source is steam taken from the drum which is then condensed in a heat exchanger where the cooling medium is the feed water flow just before entry to the drum Apart from the fact that increased attemperation will not impair cycle efficiency, the system lends itself to good controllability because there is inherent self regulation for changes in live steam flow Difficulties are sometimes experienced in maintaining the full value of live steam temperature This is due to the valves leaking and hence not maintaining their control range Partial closing of a serial manual valve is the usual stopgap solution Superheater outlet temperature and a derivative of superheater inlet temperature are compared to the setpoint to form the control deviation

(e) Boiler Drum Level Control System

Four feedwater valves control drum level The first and smallest valve (ΔV-02) is used for filling the drum and for ignition Drum level is controlled manually The second valve (ΔV-50) is used during heatup and uses single element control (drum level) in a closed loop system The third valve (ΔV-100), used during low load operation and the fourth valve (ΔV-150), used during high and full load operation employ a three element control scheme (feedwater flow, steam flow and drum level) The regulating valves have differential pressure limit of 16-30 kg/cm^2

(f) Boiler Interlock and Protection System

A basic interlock system using electrical relays is in existence Protection is effected via electrical relays for the following conditions high and low drum level, high and low steam temperature, both forced draft fans not in service, both induced draft fans not in service, no primary air fan in service, low fuel gas pressure, low mazut pressure, and air heaters off on units with heaters The drum level tripping system sometimes causes false boiler trips due to its poor hydrostatic system

(g) Burner Management System

There is no individual protection fitted to burners and no burner flame scanners are fitted The flame monitoring is visual only through the flame observation ports

(h) Boiler Blowdown

Boiler blowdown is accomplished in two ways, continuous and intermittent Intermittent blowdown is performed manually under administrative control However, continuous blowdown is regulated at 0 3 to 0 5% of steam flow by an electronic controller The controller monitors steam flow, blowdown flow and cyclone pressure These readings are used to position the blowdown control valve

(i) Stack Emissions Monitoring

There are no NO_x, $S0_2$ or CO measurements on these units, however the units do have opacity monitoring Due to the increasingly stringent requirements being promulgated by the City of Bishkek a complete continuous emissions monitoring system will be required in the future The existing opacity monitoring system does not work well, and is not relied upon

Since all boilers discharge their flue gases into a single 300-meter stack, it is difficult to identify gases from individual boilers Without the ability to monitor flue gas emissions from each boiler, it is further impossible for plant maintenance staff to determine which boilers are operating efficiently, and which may need repair or adjustment

(j) Turbine Control System

The original mechanical governors are still in operation For both the 60 MW and 110 MW units there are four main governing valves and one stop valve Since these are not reheat units, there are no intercept valves The intermediate pressure (IP) stage of the 110 MW units steam flow is controlled by valves which control steam flow to the district heating system There is no IP stage on the 60 MW units

(k) Turbine Interlock and Protection System

Interlocks of a basic nature are fitted Protection applies to the following conditions excessive movement at thrust bearing, low steam temperature, low lubricating oil pressure, high water level in HP feedheaters, no boiler feed pump in service, generator electrical faults, and low hydrogen seal oil pressure and a loss of vacuum All of the above protection and interlocks are effected via electrical relays Overspeed protection is provided via overspeed rings and the hydraulic fluid system The turbine is protected against water ingress from the feedwater heaters by fast-acting non-return valves and isolating valves in the bleed steam lines which are activated electrically by electrical sensors on the feedwater heaters There is no stress monitoring on the turbine but casing temperatures at various points are measured and recorded Turning gear is provided which turns the rotor at 3 to 4 revolutions per minute The turning gear electric motor is rated at 20 KW

(l) Turbine Supervisory System

The following supervisory measurements are made on the turbines thrust bearing position, eccentricity, vertical and horizontal vibration at all bearings, casing expansion, relative expansion, bearing oil outlet temperature and turbine speed by a digital electronic system

(m) Feedheating Controls

The condenser hotwell level and the levels in the feedheaters are controlled using automatic regulators All of the actuators are electrically operated All heaters and the condenser are equipped with water level gage glasses Each extraction point is equipped with a check valve to prevent water ingress These valves are equipped with hydraulic accelerators to improve the valve operating time

(n) Plant Alarm System

This is the original system which still operates in a satisfactory manner The system is not prioritized hence many alarms can appear for a single cascading failure A standard, simple ISA sequence is used for display and control of the lamps and the horn

(o) Control Oil System

The turbine control oil system employs a shaft driven main oil pump and starting, reserve and emergency oil pumps The oil reservoir is monitored locally by a gage glass and remotely in the control room by an electronic indicator

(p) Local Panels

Each local turbine panel contains pressure gages for main steam and each extraction steam pressure as well as control oil and lubrication oil pressure The local generator panels contain gages for generator frequency, hydrogen pressure and generator cooling

(q) Local Feedpump Control and Instrumentation

Each feedpump has local indication of suction, discharge and balancing chamber pressure as well as oil cooler inlet and outlet pressure In addition, feedpump flow is displayed Pump suction and balancing chamber water temperature, bearing oil discharge and oil cooler inlet and outlet temperatures and pump motor frame and temperatures are also displayed Controls for feedpump ON-OFF control, lubricating oil pump ON-OFF control, and feedwater flow control valve and pump emergency trip are also located locally There are also local indicating lamps for the circuit breaker and power panel availability A local annunciator signals the following

2510

- Loss of bearing oil pressure
- Loss of pump discharge pressure
- High pump balancing pressure
- Low oil tank level
- High bearing temperature
- Loss of pump power
- Flow control valve misaligned

A summary of these alarms appears in the control room as "FEP TROUBLE"

(r) Ash Removal System

The wet ash scrubbers (scrubbers with venturi tubes) are equipped with the following devices

Scrubber	-	Manometer (differential pressure gage) for water pressure reading
Venturi Tubes	-	Manometer for nozzle pressure reading
	-	Flowmeter for venturi tube water use
	-	Resistance thermometer to read flue gas temperature after the scrubbers

The electrostatic filters are equipped with a kilovolt meter and a milliammeter for each device

For the wet ash removal system, each of the slag pumps, wash pumps, venturi tube pumps and water fitting pumps are equipped with ammeters The channels each have a high level alarm and the water lines have manometers

The kilovolt and milliammeters for the ESP's do not appear to be working properly and should be replaced when the ESPs are replaced or refurbished

(s) Information Systems

There is a prototype computer system on which programming work is still being carried out The eventual aim is to record and display some operating data and also provide the operator with processed information It measures and displays temperature pressure and flow for some of the mains to the district heating system It is currently located in Control Room Number 1

However, in general there is a great lack of management information systems, management planning systems, event recording systems, and good operator information systems Good information systems can help management make decisions closer to optimal, predict

241

maintenance needs and reduce associated costs, improve operating efficiency, and improve plant availability Good event recording systems enable the management team to identify the root cause of problems and thereby provide the first step in eliminating them Good operator information can alert the operators to any trends and help them to take corrective action sooner It can also make them more aware of their role in achieving optimum operating conditions Additionally, when improvements are made to the plant through process changes, without a good information system there is no means of measuring improved efficiency Expenditure in this area will bring good returns on investment provided that the plant management embraces it fully The prototype computer system should be expanded to include more plant systems and include displays in management offices

(t) Operation and Maintenance

The nature of this equipment is such that it requires considerable ongoing maintenance to keep it operational

(u) Equipment Condition

The original equipment is long since obsolete In the short term careful maintenance should prevent the C&I equipment from degrading the overall availability and reliability of the plant However, with the possibility in the future of more load following and two shifting, and the lack of spares, this equipment is inadequate

The following list describes various types of instrumentation failures, experienced at Bishkek TES which could lead to major equipment failure

1 Coal mill bearings often fail because of the poor temperature monitoring system

2 There is a constant unbalance between feedwater flow measurement and boiler steam flow measurement because of poor monitoring equipment

3 The mazut tank level indication system does not accurately indicate tank level due to low sensitivity manometers (differential pressure gauges) and an obsolete tank float system

4 The boiler steam drum water level protection system causes false boiler trips, and could result in a non-trip when one is required because of the poor performance of the hydrostatic level indication system

5 Various technical and economic (such as efficiency) calculations are difficult to perform because of inaccurate measurement of steam and water parameters (flow, temperature, etc) and also because there is no equipment to measure fuel quality or quantity

6 Emergency and off-normal conditions are difficult to analyze because of unclear parameter recording, recorders stop recording periodically, and the recorder timing works are unsynchronized

7 Inaccurate water level monitoring causes water carryover into the superheater and turbine

8 Inaccurate boiler air flow measurements causes incomplete combustion of fuel and high plant emissions level

(v) Control Rooms

There are five control rooms from which the boilers and turbines are monitored and controlled There are two additional control rooms which each house a main control panel In addition, there is a control panel in the water treatment area

The boiler/turbine control rooms operate without many of the instruments normally found in western plants due to lack of funding System components most in need of monitoring are boilers, turbines, and heat exchangers These represent important areas of improvement for this facility, even though investment in adequate monitoring will require more money than is available within the plant's operating budget

(w) Thermal Insulation

The boiler furnaces tubewall lagging has deteriorated as has the air/flue gas duct system Visual examination has indicated that other plant systems also have deteriorated insulation A portable optical temperature detector would be a useful device in locating and determining missing or deteriorating insulation

(x) Steam and Water Sampling System

The following Table lists the monitored process points, the species measured and the frequency of sampling

Point	Testing Agent	Symbol	Source	Frequency of Tests
1	Oxygen	0_2	Turbine generator condensate, heating system water, hot water boilers chemically dissalted water deaerator, feed water deaerator	One time during 10 day period
2	Carbon dioxide	$C0_2$	Heating system water, hot water boilers	Once a day
3	Salt content	mg/liter	Turbine generator condensate, boiler water, salt compartment	Once a day
4	Iron	Fe	Lower level tanks, drain tanks, heating system water, hot water boilers, turbine generator condensate, boiler feed water	Once every ten days
5	Alkalinity	OH $C0_3$ $HC0_3$	Heating system water, boiler water, salt compartment, boiler feed water, hot water heaters	3 times a day
6	Hardness	Ca^{+2} Md^{+2}	Turbine-generator condensate, hot water heaters, heating system water, boiler feed water	3 times a day
7	pH indication	pH	Superheated vapor, saturated vapor, turbine-generator condensate, boiler feed water, chemically dissalted water deaerator, hot water heaters, heat grid	3 times a day
8	Silica	$Si0_2$	Superheated vapor, saturated vapor, boiler feed water, boiler water, pure compartment and salt compartment	3 times a day
9	Phosphate	$PO_4{}^3$	Boiler water pure compartment, salt compartment	3 times a day
10	Copper	Cu	Turbine-generator condensate, boiler feed water	Once every 10 days
11	Ammonia	NH_3	Boiler feed water	3 times a day
12	Hydrazine	N_2H_4	Feed water deaerators, boiler feed water	Once a day
13	Oils		Boiler feed water, heating system water	Once every 10 days

This program is considered adequate

Process Control Assessment

The process monitoring and control technology employed at the Bishkek TES is, by international standards, outdated Investment in modern systems is essential for any plant which is to be rehabilitated for life extension

In general it was found that the systems in use in the power station are obsolete Although the number of control loops is adequate, several of these loops were out of service, supervisory and protection systems are minimal, and there is a marked lack of event recording and operator information systems

There is little opportunity to maintain the present system due to lack of spares and further deterioration will take place Manometers are repaired by replacement of worn out parts such as gears, tubes and sectors Old types of manometers are no longer manufactured so that spare parts are unavailable Resistance thermometers are subject to wires breaking and short circuits in the coils Since they cannot be repaired, they must be replaced Although recently the combustion monitoring system was upgraded to include modern oxygen analyzers, such modernization has not taken place on a consistent basis due to lack of funding

Since the first stages of construction took place in 1958 through 1960 until the most recent addition of four new boilers in 1981, there has been no general upgrade of plant instruments and controls Visual examination of the control room instruments especially in the 1960 vintage control rooms, indicates that many indicating instruments are out of service Those that are in service are performing poorly, that is indicators are out of their initial accuracy band, and strip charts recorders oscillate so much from worn gearing that they trace broad lines observing the data These results are evident despite the care given by the plant staff

In the newer control rooms, 1981 vintage, the same overall control and measurement philosophy is evident even though the devices are much newer In these control rooms there is less evidence of missing, nonfunctioning or malfunctioning devices However, lacking the ability to provide replacements or repair the existing devices, they will soon approach the condition of the older control rooms

Modern western power plant control rooms are characterized by a lack of discrete indicating devices such as meters, recorders and status lights Information on plant conditions is presented to the operator on large color cathode ray tubes (CRT's) These CRT's receive their process information from input/output (I/O) cabinets located on the plant floor near to the process they are monitoring and controlling Operator instructions to the system is through keyboards or touch screen CRT's A data highway cable is used to connect the I/O cabinets to the CRT

In addition to performing all the controlling functions of the plant, all of the indicating, recording, alarming, as well as the other functions concerning data acquisition and data

processing are also included Conventional annunciators, lights, analog indicators and recorders, digital indicators, printers and CRT displays may be utilized as well

Since this equipment is digital and electronic, it is extremely stable and long lived, requiring minimal retuning or maintenance Various schemes which guard against catastrophic failure are employed The control systems used at the Bishkek TES, although using obsolete technology, that is discrete control loops for each function, continue to perform their primary functions and the plant operators are in general satisfied with their performance

The monitoring systems however are unreliable and frequently fail Furthermore, the existing instrumentation does not lend itself, even when it is working, to remote monitoring so that plant status and performance and operator performance can be monitored remotely The energy office, the district heating office, each central heating panel, both main control panels and the plant director and his assistants need data from plant operations This data is currently hand copied and delivered periodically to each destination, a slow and error prone process

Placing a computer with CRT display in each location and connecting the computers to each other via coaxial cable will create a network through which plant data, entering the network at any point, is immediately accessible at all CRT's Connecting to distant locations such as the energy office and district heating office would be made through modem This type of a system is similar to a DCS (Distributed Control System), however, it performs no control functions as a DCS does

Process inputs to the system enter through controllers (I/O) sometimes called multiplexers, which signals are then fed to a host computer located in main control room number 1 Since the signals currently exist in each of the eight control rooms, the controllers would be placed centrally in the control rooms

The field transmitters for process variables such as pressure, temperature, flow and level should be replaced since they sometimes perform erratically The existing transmitters use 0-5 mADC, which means there is no live zero, and they are more noise susceptible

The system should also be outfitted with a network printer for hard copies of system variables and programming, and a file server to store the network programs Several network repeaters are required from distant plant locations such as the water treatment area and the engineering offices Special coaxial cable is required to make the network connections and connect the controllers to the computer This use of special cables is offset by the reduction in general cabling which one would normally expect from the addition of extra computer terminals

This type of system lends itself to performing additional tasks which the older discrete analog system either does not perform, or requires extra equipment to perform These are

- Scanning each point at it's desired periodicity
- Instrument failure tests such as loss of signal
- Correcting thermocouple values for cold junction temperature
- Converting process readings to engineering units using linear, square root or other conversions
- Thermocouple open circuit tests
- Instrument range reasonability tests
- Low and high limit alarms

The existing prototype computer system generates bar graphs of flow, temperature and pressure in the hot water mains leaving the plant as well as steam flow on a percentage basis for steam leaving boilers 18, 19 and 20 It also measures steam pressure for boiler number 23 These are simple horizontal bar-graph displays, but could be reprogrammed to have a trend display, and by using multicolored displays, one trend can be distinguished from another Such a system would require multi-page CRT displays for Bishkek TES because there are 24 boilers and 10 turbines to be displayed, with a future eleventh turbine

There are currently 3,029 analog signals and 545 digital signals which lend themselves to display on the data logging and display system Considering the eleventh turbine we should allow for an additional 40 analog signals, and an additional 10 digital signals This would require 3,069 analog signals, and 555 digital signals If we allow 20 percent spare capacity for future growth, which would include the new coal pulverizers, duct burners and shot cleaning system, then the system size will be 3,375 analog channels and 610 digital channels

A portable optical temperature detector would be a useful device for detecting missing or deteriorating insulation in the high temperature piping systems It is a non contact device through which temperature at the surface of a remote pipe may be observed by sighting through the lens of the device

Since natural gas may be fired when there is a seasonal surplus, means should be provided to determine the heating value of the gas This is presently done periodically by laboratory analysis which, although accurate, is time consuming On line calormetry should be performed

When mazut is being fired, means should be provided to determine consumption by each boiler, and a method for determining reserves in each tank is necessary Flow to the boilers is best determined by a non-contact type meter such as a coriolis meter Tank level can be determined through ultrasonic or capacitance type gauges Both of the above methods are

used to prevent plugging of the instruments with heavy oil This will alleviate the problems with incorrect tank level measurement

The efficiency of the boilers can be improved by firing them on low excess air Insufficient air will cause incomplete combustion and waste fuel, whereas a large amount of excess air will cool the furnace and result in loss of steam generation Placement of in-situ oxygen analyzers of the high temperature zirconium-oxide type can be used to find the optimum excess air setting, usually above four percent 0_2 Those boilers without modern oxygen monitoring cells should be upgraded

A useful tool for tuning boiler operations is the portable combustion analyzer By inserting a probe into the boiler gas exhaust path, reading can be taken for stack temperature, oxygen, nitrogen oxides, carbon monoxide, sulfur dioxide, combustibles and smoke Placing a continuous emissions monitoring system in the smokestack will only determine gross emissions from the plant, not from each boiler However, the portable combustion analyzer can be used to determine each boiler's performance and even boiler efficiency This method can be used to isolate, tune or repair faulty boilers

During steady state operation of a boiler there is a continuous variation in fuel heating content, combustion air density and moisture, and consequently combustion temperature During transient operations the situation worsens, as steam flow varies, air and fuel flow also vary Variations in the above parameters effect the required air flow through the forced draft fans Currently, the forced draft fan air flow is set periodically and manually by the boiler operator by adjusting the fans vanes On U S power station boilers, the fan vanes are adjusted continuously and automatically in response to the flue gas oxygen contents This method eliminates some of the above variables from the operations control and gives the control system very fast response thereby improving boiler operations The U S method should be introduced on the Bishkek boilers

Currently coal flow to the coal mills is measured and controlled volumetrically, that is by controlling coal feeder speed This method does not allow for voids in the coal flow, or for erratic operation of the feeders A better method would be to measure the flow gravimetrically, that is by measuring the weight on the feeders This would ensure a more uniform flow of coal to the mills

Coal is currently analyzed by taking samples from the conveyors periodically, then mixed and a laboratory analysis is performed This method takes several days to do a complete analysis In order to accelerate this process, on-line coal analyzers are available which can give moisture content, ash content and caloric value These on-line analyzers should be applied at Bishkek

3.2 8 Assessment of DH System and Pumping Station

The input for this section (hotwater district heating system) was provided by the European Community Energy Advisory Group

Of Bishkek's population of about 700,000 approximately, 60% of the inhabitants are dependent on heat and hot tap water supply from the district heating system The district heating network is supplied with heat from two larger production facilities TES1 and TES2

The heat is distributed mainly as hot water, however, about 30% of the total heat supply is supplied as steam for industrial purposes

The system in Bishkek has the special peculiarity in contrast to western systems that is designed as an open system This means the consumers are normally directly connected to the district heating network and further, the hot utilization water is taken directly from the district heating system Thus, the hot tap water is identical with the water in the district heating pipes

According to the perspective plans, the main part of the city should be supplied by either TES1 or TES2 Due to lack of finance for purchasing gas TES2 is at the moment not in operation As a consequence some part of the network is supplied by the industrial plant Frunze However, the largest part of the heat demand is covered by the combined heat and power plant TES1

Apart from the main network, a large number of local heat systems are present in Bishkek These local heat systems are typically consisting of a Heat Only Boiler (HOB) supplying a local district heating system The present supply strategy is based on the constant flow principle where the flow in the district heating system is close to constant and the heat supply is adjusted by changing the supply temperature

If heat is needed in the network the supply temperature is increased correspondingly Due to the constant flow system, the consumers will experience the increased heat supply with a certain time lag depending on the velocity of the DH-water and the distance from the heat supply source The time lag will typically last from a few minutes for the nearest consumers to a number of hours for the most distant consumers In some cases, the heat will reach the most distant consumers after the heat demand has actually ceased meaning an excess temperature at the consumers As the consumers are normally left with poor heat regulation possibilities, this means the only way to regulate the indoor temperature will be by opening windows leading to a high energy loss

(a) Main Characteristics of the Hotwater District Heating Network

The circulation of the water in the district heating system is done by constant flow pumps located at the supply sources The system is designed with a number of pumps used all

249

winter and a number of pumps used during the summer for the hot water supply A number of pumps are located in the district heating system as booster pumps or to overcome the large differences in ground level between the main network and certain consumer groups

The network is characterized by a large number of ring connections which means a relatively high supply security However, during the summer the total network supply is cut for about 1 month due to the repair works

The secondary network is composed of about 255 individual networks each connected directly to the main network, "Connection points" Buildings and industrial consumers are connected to the secondary network through the so called "Thermal points" of which there exist about 3,200 The dwellings are normally connected through a "hydro elevator" which is a hydraulically open connection (about 3,100) The industrial consumers are normally connected through heat exchangers, which isolate the internal distribution system hydraulically from the district heating system

The district heating network (DH-network) for transmission of heat and hot water to the consumers consists of pipes ranging from DN150 (nominal diameter 150 mm) to DN1000, whereas the distribution network consists of smaller dimension pipes The overall length of the network is about 331 km double pipe comprising 157 km's of transmission pipeline and 174 km of distribution pipelines

The general condition of the pipes is rather poor For some pipe constructions the lifetime is reduced due to

- Steel pipes corrode from the outside due to high humidity in the ducts and due to wet insulation

- Leaking water from holes in the pipe system, which are not discovered and repaired, accelerates the outside corrosion

- Rain and sewage water leaking through cracks in the concrete elements adds to the corrosion process

Steel pipes corrode from the inside as well due to

- Oxygen and chloride in the water

- High conductivity

- There is sludge, magnetite etc which may coat the pipes and introduce a corrosive process starting from cracks in the "coating"

250

- Possible poor quality of steel used in manufacture will accelerate the corrosion process

There is a problem with soaked insulation which leads to high heat losses i e , the metal casing of the pipes is removed by the inhabitants leaving the insulation unprotected on the pipes The consequences is higher heat losses and reduced lifetime of the remaining insulation A simple way to stop the stealing of metal casing would be to cover it with a coat of mazut

(b) Booster Pump Stations

Apart from the pumps installed at the plants, a number of booster pump stations are located in the network There are principally two types of booster pump stations

1) Normal booster pump station where the pressure is boosted in the return or the supply pipe There are no booster pump stations for increasing the supply as well as the return pressure

2) Booster pump stations with pumps boosting the pressure due to variation in elevation (High level booster)

The high level booster pump stations are equipped with automatic control valves for regulating the pressure in the return pipe down As mentioned, the flow is constant during the year and the pumps are fixed flow pumps The typical booster station have only one or two modes of operation, both with constant flow Introduction of variable speed drive pumps at the booster pump stations could be relevant if the flow concept is changed

(c) Main Valves

Underground concrete chambers are constructed at branch points where the local network branches from the main network The chambers at the main points contains sectioning valves making it possible to divide the network into sections if the network must be supplied from an alternate heat source

(d) Substations

Substations are the locations at the consumers where the district heat is supplied It is also known as Thermal Point

In the Bishkek DH-systems the most common types of substations are

Direct connection through Hydro-elevator

Heat exchanger with temperature regulation

The Hydro-elevators are the general type in dwelling houses for heat control through hot water, whereas the heat exchangers are for industries in general for the exchange of steam to hot water, or steam used in the industries

The DH system is equipped with fixed pumps in the Boiler plants and the pumping stations However, the frequency adaption of the pump configuration to follow the hot tap water consumption, gives the substations different supply conditions during the heating season, even to the same heat requirement

Each Substation is designed for a specific flow and pressure loss The networks are carefully calculated according to the heat demand for each substations The surplus difference pressure in each Substation is removed by a diaphragm located in the hydro-elevator

This means that the outline design, based on constant flow conditions for the substations, and the network capability for adaption to heat and water demand, is not met as assumed, because of the influence of the hot tap water consumption and the frequent changes in pump configuration

(e) Insulation

When entering a substation, one will normally notice the high room temperature This is due to poor or even lack of insulation at some of the pipes and on all components This means that heat loss if unavoidable and can be reduced by small means

(f) Present Installations

The heating systems in the houses are only operated during the heating season (from October 15 to April 15) with a constant water flow

(g) Heat Losses

The heat losses from the district heating system can be divided into

- Heat losses from the underground network including pipes, valves, chambers
- Heat losses from the aerial network including pipes, valves, chambers
- Heat losses from other installations i e , substations, pump stations etc

(h) District Heating System Instruments and Controls

A minimal number of instruments and automatic controls are available in the district heating system Those that are available are quite old, either needing repair or re-calibration Without instruments which function properly to monitor and record such essential variables

252

as flow rate, temperature, and pressure, it is difficult to accurately determine balance measurements and conduct effective energy-efficiency analyses, on which overall plant performance should be based

Dispatcher

Authority resides within the distribution system to determine the amount of heat that the district heating system requires at any one time A central dispatcher monitors the system and the outside air temperature The dispatcher determines the outdoor temperature, and then based on a temperature chart, determines what the district heat supply temperature should be The district heating system is designed to supply 150°C, but in reality only supplies a maximum of about 130°C (about 120°C without the power plant peaker boilers operating) The dispatcher notifies the power plant and the boiler plant operators what temperature they are to produce, and they are required to follow those directions

Control Systems

The main problem within the end-users is the lack of temperature control Few buildings have any control device, and most are overheated for a significant portion of each year The piping design used in each building is standard, with a venturi device blending water to provide a reduced water temperature to the building Since this device is incapable of changing with the season or outdoor temperature, it is dependent on the entering supply temperature to provide the correct amount of heat In theory when water is blended or mixed, the heat to the building will be adequate but not excessive But this system is not very effective, and many buildings can be observed with their windows open, while the heating system is operating Opening windows serves as a control device, but obviously is not very effective, and causes additional heat to be expended

Several control techniques can be used to improve or replace this system and provide proper control to the building The best method involves adding temperature control to each terminal heating device or to each heated room This provides good control, and allows each room to be controlled to a specific setpoint As the outdoor temperature changes or the effects of the sun vary throughout the day, the control device will adjust the water temperature to maintain the room temperature The main drawbacks to this method are

1 A great number of control devices (temperature control valves) would have to be added, and the cost would be high

2 Adding valves to each device would be very disruptive, since each room would have to be entered, and the piping changed by adding the valve This would also require a long installation period

3 Depending on the piping arrangement used, additional bypass piping sections may also have to be added to some systems, so that the new controllers do not adversely affect other areas of the building

Another way to correct the situation would be to add a temperature controller to the main piping system This can be accomplished by either replacing the venturi device, or adding a parallel piping loop containing a control valve The control valve could basically accomplish the same goal as the venturi, mixing district heating water and return water However, this device could be configured so as to respond to outdoor temperature directly, and to adjust the flow of district heating water and return water to change the supply water temperature While this system is much better than the existing inducing venturi, it still provides only one point of control within the building Therefore, every room in the facility will have the same temperature water delivered to it This is obviously not as good as having every heating device under control, but it is much less expensive, and the majority of the energy savings is still realized If the sun happens to be shining on one side of a particular building, it is possible that part of the building might overheat, and the tenants or residents might open their windows

3 2 9 Assessment of Industrial Steam Supply System

The Bishkek Industrial Steam Supply network consists of approximately 57 kilometers of pipelines and supplies the process steam to various industries in Bishkek It has approximately 38 kilometers of aboveground pipes, and 19 kilometers of underground pipes The peak steam load for the system was 350 tons/hour during the soviet era, but at the present time the steam load has dropped to less than 100 tons/hour The list of current industrial customers is included in Table 3-22 The average industrial steam flow rate history from the Bishkek plant from year 1985 through 1994 is shown in Table 3-23 The steam export from the TES plant is listed by month

The process steam pressures and temperatures at the boundary of TES plant are sometimes as high as 10 8 bars and 309°C, but by the time the steam reaches the farthest customer in the system, the steam temperature drops to as low as 162°C During June 1994, the district heating office conducted some tests on the district steam supply system The test data and results are shown in Table 3-24 The findings from the test data are as follows

(1) The steam pressures, temperatures and flow rates were measured at various node points in the system It was observed that steam conditions in most of the lines were wet although the steam left the plant in the superheated condition

(2) The losses exceeded the normal standards because of significant drop off in the steam demand due to industry shutdown There was a lot more condensation of the steam

(3) The increased condensation also resulted due to very high heat losses because of aging, wear and destruction of steam lines insulation

(4) The excessive length of steam lines from the Bishkek plant also increased heat losses and condensation

(5) Wide fluctuations in steam demand due to economic slowdown during the week from the active customers resulted in increased losses

TABLE 3-22

List of Industrial Steam Consumers for January 1995

No	Name of Facility	Steam Use, (tons/month)	Pressure, (kg/cm^2)	Temperature , (°C)
1	Kygızautomach	3555	8	190
2	Bıshkek Sut	1210	8	220
3	Bıshkeknan	1180	10	200
4	Zıl	2598	6	170
5	Meat Factory	185	6 3	161
6	Arpa	786	8 2	863
7	VID-2	1992	6 1	159
8	Bgatı - Unıversıty	168	2	120
9	Trolley Beuarau	1561	3 7	140
10	Hard Lıquor Factory	325	5 2	153
11	Zamal	20	4	143
12	KK Factory	1507	6 2	160
13	BPK-4	251	5 5	123
14	Dolphın ZPB	33	3 7	130
15	DGC	2227 4	2 5	125
16	Maternıty Home-2	315	5 6	153
17	Tash-Temır	289	7	168
18	Electrotechnıc	2126	7	168
19	Noudst GPBO	107	6	180
20	LOK Zırgal	120	6	170
21	Tatty	1194	5 5	160

256

No	Name of Facility	Steam Use, (tons/month)	Pressure, (kg/cm^2)	Temperature , (°C)
22	BPK-2	190	5 5	160
23	Salam	88	5 5	123
24	Coop-Vesna	2 4	5 5	123
25	KKSK	4733	7	210
26	ZBI ESI	852	7	210
27	Maykampa	205	6 5	160
28	Ilbirg	743	5	150
29	Emerek	90	6 5	160
30	Teplicıny	36809	7	230
31	Insight	184	4	150
32	Vıar	274	6	170
33	Kyrgyzshampagne	1426	6	170
34	ZKK Zıl	1739/322	4	150
35	Infectıon Hospıtal	1901	6	170
36	Vlar	30	6	170
37	RK KPSS	143	5	158
38	Aunzup	9	5	158
39	Store	67	5	158
40	Bakaleya	20	5	158
41	RKB	714	5	158

TABLE 3-23

Steam Supply From the Power Plant Since 1985
Average Steam Flow Rate (tons/hour)

Month/ Year	1985	1986	1987	1988	1989	1990	1991	1992	1993	1994	1993 to 94 Growth	Percent Growth
January	183 2	222 5	222 9	220 9	231 0	245 0	298 2	240 1	269 1	193 4	75 7	71 87%
February	223 1	240 4	228 7	244 3	244 3	255 3	284 5	263 1	233 6	197 8	35 8	84 67%
March	217 2	210 1	232 3	206 8	223 1	241 0	249 6	247	190 8	141	-49 8	73 90%
April	139 6	158 7	205 0	161 5	186 6	238 3	204 0	198 4	154 3	114 0	-40 3	73 88%
May	155 1	141 6	174 6	151 6	173 8	172 7	180 0	208 8	129 3	75 0	54 3	58 00%
June	160 9	140 2	179 3	147 9	153 8	170 0	151 5	183 0	103 4	65 3	38 1	63 15%
July	177 4	154 7	182 0	152 0	161 2	181 7	162 6	134 0	99 5	72 4	27 1	72 76%
August	161 7	132 9	169 0	151 0	167 2	174 8	180 9	136 0	93 1	58 0	35 1	62 30%
September	162 0	150 5	163 0	164 0	167 6	189 8	197 0	151 9	109 6	60 4	-49 2	55 11%
October	170 6	166 0	202 0	175 0	194 2	230 3	223 0	173 5	150 7	71 5	79 2	47 45%
November	210 4	175 3	229 5	206 5	242 4	270 6	263 0	198 0	182 1	84 3	97 8	46 29%
December	236 0	203 4	228 5	225 8	233 2	289 8	294 4	261 7	158 2			
Averages											52 95	64 49%
Year	183 10	174 69	201 40	183 94	198 20	221 61	224 06	199 63	156 14	103 01	53 13	65 97%
Summer	159 45	146 43	178 82	154 67	168 37	187 88	179 33	168 68	114 87	74 18	-40 68	64 58%
Winter	206 75	202 95	223 98	213 22	228 03	255 33	268 78	230 57	197 42	137 60	59 82	69 70%

258

TABLE 3-24

Heat Losses calculation at Industrial consumers during summer 1994

(According steam (SP) test data, June 14, 1994)

Serial #	Contract #	Name of Customer	Point of connection from transmission Line (Node#)	Consumption of Steam		Total steam supply from node			Heat losses, Gcal/h		Quantity of condensed steam, tons/h		Steam and condensate quantities
				Gcal/h	tons/h	Gcal/h	tons/h	tons/h	BDHS	Customer	BDHS	Customer t/h	For customer Gcal/h
1	303	State Joint Stock company "KKSK" (Chhui ave 2)	NO-6	34 8	10 00	34 80	10 00	10 00	0 00	0 41	0 00	0 00	10 00
2	491	State milk plant (Chhui ave , 12a)	NO-8	10 50	1 08	10 50	1 08	4 23	1 01	0 74	1 60	1 55	4 23
3	307	Ferroconcrete structures plant (Chhui ave , 2)	NO-13	4 86	0 50	4 86	0 50	0 50	0 00	0 06	0 00	0 00	0 50
4	332	Bakery (Armeiskaya, 150)	NO-20 VPZ-2	4 65	4 20	4 65	4 20	4 46	0 00	0 31	0 00	0 26	4 46
5	374	Textile factory (Alam-Aty,1)	SK-V-12	3 00	0 00	3 00	0 00	0 00	0 61	0 02	0 00	0 00	0 00
6	301	Kyrghyz Automobile enterprise (Matrosova, 11)	NO-34	22 40	0 00	-	-	-	0 00	0 08	0 00	0 05	0 00
7	43	Industrial constructional materials plant (Khvonaya, 70)	NO-34	1 20	2 00	-	-	-	0 00	0 17	0 00	0 34	2 40
8	12	Industrial laundry and chemical clothes cleaning	NO-34, Pravda st	0 80	0 87	24 40	2 87	3 27	0 00	0 06	0 00	0 00	0 87
9	1787	Born house (Moskovskaya, 82)	NO-43 s (SK-V-5)	0 70	0 10	-	-	-	0 09	0 04	0 19	0 09	0 38
14	222	Bath (Toktogula 53)	NO-43 s (SK-V-5)	2 91	0 70	-	-	-	0 47	0 02	0 99	0 04	0 74
11	417	BPK-2 (Jibek-Jolu)	NO-43 s	1 03	0 60	-	-	-	0 57	0 01	1 18	0 01	1 26
12	22	Biscuit Factory (Jibek Jolu 294)	NO-43 s	0 95	1 17	-	-	-	0 04	0 02	0 08	0 03	1 89

259

Serial #	Contract #	Name of Customer	Point of connection from transmission Line (Node#)	Consumption of Steam		Total steam supply from node			Heat losses Gcal/h		Quantity of condensed steam, tons/h		Steam and condensate quantities
				Gcal/h	tons/h	Gcal/h	tons/h	tons/h	BDHS	Customer	BDHS	Customer t/h	For customer Gcal/h
13	341	Liquor and Vodka factory (Sovetskaya 220)	NO-43 s	0 57	0 09	6 16	2 66	5 35	0 26	0 04	0 54	0 08	1 07
14	317	Ferro-concrete structures plant JBI-1 (Gorky, 1)	NO-43 u (SK-V-5)	16 00	0 10	-	-	-	0 26	0 31	0 53	0 65	1 01
15		Furniture factory (Kulatova)	NO-43 u (SK-V-21)	3 00	0 18	-	-	-	-	0 04	-	0 08	0 26
16	316	Milk products warehouse (Kulatove 1)	NO-43 u (SK-V-21)	0 28	0 22	-	-	-	-	0 02	-	0 04	0 26
17	419	BPK-4 (Shryabina-Jukeeva Pudovkina)	NO 43 u (SK-VI-2)	1 12	0 49	20 40	0 99	3 13	0 36	0 04	0 76	0 09	1 60
18	862	Inturust hotel (Erkindik)	NO-45	0 03	0 50	-	-	-	0 00	0 02	0 00	0 04	0 54
19	327	DOP-3 (Tolstoy 3b)	NO-45	2 60	0 15	2 63	0 65	0 87	0 00	0 08	0 00	0 17	0 32
20	305	Geological administration (Dzerjhinskogo, 3)	NO-47	0 01	0 10	0 01	0 10	0 11	0 00	0 00	0 00	0 01	0 11
21	866	Republic hospital (Togolok Moldo, 1)	NO-58	3 70	1 70	3 70	1 70	1 80	0 00	0 05	0 00	0 10	1 80
22	492	Children infection hospital laundry	NO-59	5 30	0 47	-	-	-	0 09	0 06	0 18	0 13	0 65
23	336	Shampaign factory (Mira ave, 48)	NO-59	1 63	1 60	-	-	-	-	1 24	-	2 58	4 27

Serial #	Contract #	Name of Customer	Point of connection from transmission Line (Node#)	Consumption of Steam		Total steam supply from node			Heat losses, Gcal/h		Quantity of condensed steam, tons/h		Steam and condensate quantities
				Gcal/h	tons/h	Gcal/h	tons/h	tons/h	BDHS	Customer	BDHS	Customer t/h	For customer Gcal/h
24		Joint stock company "Insat	NO-59	0 00	0 30	6 93	2 37	5 31	-	0 02	-	0 04	0 38
25	317	Lenins Plant	NO-64	15 00	0 00	15 00	0 00	0 00	0 00	0 00	0 00	0 00	0 00
26	864	Winter swimming pool	NO-92	0 08	0 30	0 08	0 30	0 30	0 00	0 00	0 00	0 00	0 30
27	310	Beer factory (Tooktogula, 256)	NO-96	2 90	1 44	-	-	-	0 00	0 52	0 00	1 07	2 52
28	1611	Maternity house 2 (Moskovskaya 255)	NO-96	0 80	0 30	3 70	1 74	2 86	0 00	0 02	0 00	0 04	0 34
29	416	Macaroni and sweet factory (Kulieva 1)	NO-103	9 15	3 10	9 15	3 10	3 17	0 00	0 03	0 00	0 07	3 17
30	427	Vagon repairing depo	NO-108	0 87	0 60	-	-	-	0 00	0 06	0 00	0 13	0 73
31	327	Ice producing factory	NO-108	0 36	1 00	1 23	1 60	1 73	0 00	0 00	0 00	-	1 00
32	309	Bread products factory, mill plant (Kulieva, 2)	NO-110	4 60	0 00	4 60	0 00	0 00	0 00	0 00	-	0 00	0 00
33	302	Meat Factory (Moskovskaya 266)	NO-110	9 17	0 86	9 17	0 86	0 97	0 00	0 05	-	0 11	0 97
			TOTAL	164 97	34 72	164 97	34 72	48 04	3 75	4 55	6 04	7 80	48 02

3 3 Comparison of the Bishkek Energy System with Other Similar Systems in the Kyrghyz Republic

3 3 1 Asessment of the City of Osh TES and District Heating System

(a) Background and Plant Description

The Osh TES and district heating system began commercial operation in 1965-1969 The station is composed of five boilers and two turbine-generators Boilers No 1 to 3 are type BKZ-120-100 steam boilers and were manufactured by the Barnaul Boiler Company The last two boilers are hot water boilers, and are type PTVM-100 and KVGM-100 The model numbers for the turbines and generators are PT-25-90/10/1 2, PR-25-90/10/0 9, and TVS-30 respectively The table below shows the operating time for these units as of January 1, 1995

BKZ-120-100 Steam Boilers	**Hours of Operation**
No 1	148,163
No 2	156,554
No 3	145,613
Hot Water Boilers:	
No 4 (PTVM-100)	23,691
No 5 (KVGM-100)	14,160
Turbine-Generators	
No 1 (PT-25-90/10/1 2)	174,539
No 2 (PR-25-90/10/0 9)	149,246

The main design fuel for the station was Kyrghyz domestic natural gas Mazut was designed as a secondary fuel The station stopped burning natural gas in 1973 because the Kyrghyz Republic had exhausted its natural supply Presently, mazut #40 & #100 is the only fuel that is used at the station The mazut being fired has a LHV of 9610 kcal/kg

The BKZ-120-100 boilers are natural circulation, drum type with a radiant balance draft furnace The furnace has a shallow refractory lined bottom part The boiler configuration is of the conventional two-pass type with a close-coupled convection vertical rear pass The boilers were designed to be fired with both natural gas and/or mazut The furnace is rectangular with the dimensions of 6336 mm wide and 4160 mm deep If has fully cooled carbon steel tubewalls which are 60 mm OD x 4 mm thick, and are on 64 mm centers The furnace and convective pass rooftubes are steam cooled with 38 mm OD x 4 mm thick, and are on 45 mm centers The vertical furnace tubewalls as well as the horizontal rooftubes have a coldside refractory fill, an insulation layer, and a metal casing The small bore downcomers are embedded in the vertical furnace tubewall insulation layer The boiler is top supported with the boiler drum bottom supported from the top roofraft The vertical wall are also refractory brick lined

The furnace is front wall fired with three horizontal rows of four burners This gives a total of twelve burners which produce multi flame envelopes The burners are circular swirl type, with dual fuel (NG and mazut) firing capability The superheater heating surfaces can be divided into radiant and convective parts The radiant primary superheater (SH) consists of a horizontal, fully drainable tubebank, positioned in the upper furnace The convective secondary and the finishing superheaters are also horizontal, fully drainable tubebanks, positioned in the vertical rear pass The superheated steam final temperature control is performed by spray attemperation Saturated steam from the drum is condensed by feedwater from the first stage economizer water outlet in coil type condensers, and then injected into spraywater nozzles of the first and second stage attemperators

The economizer (three stages) consists of horizontal, fully drainable tubebanks constructed with bare tubes in a staggered arrangement with water in upflow and fluegas in downflow All the economizer stages are positioned in the vertical rear convection pass The tubular airheater is positioned at the bottom of the vertical rear convective pass and is bottom supported at the ground elevation, with flyash hoppers underneath each pass It has three fluegas passes with the gas in the tubes, two passes with gas in downflow, one pass with gas in upflow, and combustion air in the three passes is in crossflow over the tubes The airheater has a staggered tube arrangement Cold end corrosion protection of the tubes on the final gas-pass is by hot air recirculation into the FD fan suction side The differential thermal expansion of the boiler (downward) and the tubular airheater tubebanks (upward) is compensated for by a metal expansion joint, positioned at the exit of the vertical rear convective pass The heating surfaces cleaning equipment consists of two shot-clean systems, one for the economizer tubebanks and the final fluegas pass of the tubular airheater, the other for the first and second fluegas passes of the tubular airheater

The draft plant consists of a single FD and ID fan for each boiler, with electric motor drive, and an inlet radial vane control A gas recirculation fan for final steam temperature control

with mazut firing is installed on each boiler, with fluegas taken from the economizer gas side between the first and second stage and injected through the furnace front wall above the top horizontal burner row All the draft plant as well as gas recirculation fans are radial flow centrifugal type

3 3 2 Assessment of Steam Boilers and Their Auxiliaries

The following is the thermal performance of the BKZ 120-100 boilers with mazut firing

Parameter	Units	Design Value
Main Steam Flowrate	tons/hour	120
Superheated Steam Pressure	atmg	100
Superheated Steam Temperature	°C	540
Feedwater Temperature to Economizer	°C	215
Combustion Air Temperature to Airheater	°C	70
Fluegas Temperature Leaving Airheater	°C	150
Boiler Efficiency (LHV Basis)	%	91 9
Boiler Design Pressure	atmg	108

All three steam boilers have been in operation for an average of 150,000 hours, as of January 1, 1995 This large amount of operation time has caused problems to occur The following is an assessment of the boilers at the station

Thick Walled Pressure Parts

- Steam/Water Drums The Kyrghyzenergoremont Organization routinely does ND testing using magnetic particle and ultrasonic as well as visual examinations Presently no crack type failures have been reported

- Spray Attemperators Some desuperheater piping has been replaced due to low frequency cyclic thermal stress variations and fatigue damage

- Finishing Superheater Headers, Boiler Stop & Safety Valves Presently, minimal creep or fatigue damage has been found Some headers, safety valves, and boiler stopvalves have been replaced

- Economizer Inlet Headers Currently, no fatigue type damage has been reported

265

Thin Walled Pressure Parts

- Superheater Tubebanks High temperature corrosion attack as well as fatigue and creep type damage has been detected Replacement of several complete tubebanks was necessary

- Economizer Tubebanks Complete replacement is required on Boiler Nº 1 Also, heavy damage due to gas side low temperature corrosion attacks have necessitated replacement of many tubes of all economizer stages for all three boilers This pressure part component is one of the major causes of boiler shutdowns

- Tubular Airheater Tubebanks Heavy damage due to cold-end section low temperature corrosion attack and tube blockages (acid dew point corrosion) has been detected Tube blockages as well as low temperature corrosion damage has affected the intermediate tubebank also This boiler component is another major cause of boiler shutdowns

Firing System

Several of the swirl burners on Boiler No 1 & 3, have been modified for dual fuel firing capability The retro-fit was not successful, since the new burners have flame pulsation operating problems

Heating Surfaces Cleaning Equipment [shot cleaning]

The shot return conveying system has been converted from a vacuum type to a pressurized one From this change the cleaning effectiveness has become unsatisfactory The system cannot prevent fouling type tube deposits on the superheater and economizer tubebanks in the convective pass, as well as blockages of the airheater tubebanks As a result, fluegas side draftlosses have increased and this, together with the unmeasured ambient air ingress into the furnace/boiler, deleteriously affects ID fan performance

Boiler Refractory, Insulation, Lagging, Casing (BRILC)

The original BRILC is deteriorating fast, due to long operating periods and the many pressure part replacement activities that required patchwork type repairs/replacements Repair / replacement efforts are continuous, but due to the poor quality of materials and lack of skilled maintenance personnel, the unmeasured ambient air ingress into the furnace/boiler is increasing with time The BRILC deterioration is also resulting in cold side, low temperature corrosion attack on the furnace wall tubes

266

Particulate Collection, SOx, NO_x Emission Control Equipment

No equipment installed on any of the three boilers

Combustion Air/fluegas Ducting Systems and Draft Plant

Low temperature corrosion attack is the main operating problem As previously mentioned, ID fan performance is affected by the increased fluegas side draftloss over the convective heating surfaces as well as by the unmeasured ambient air ingress into the furnace/boiler/fluegas duct system

Instruments & Controls

Hot combustion air recirculation into the FD fan suction for maintaining an elevated air temperature at the cold end of the tubular airheater is to be made fully automatic I&C equipment is required to maintain the correct furnace draft, the correct combustion air excess O_2 for efficient mazut firing, to monitor boiler fluegas outlet air pollutant emissions, to control mazut firing rate as a function of load demand, and to monitor superheater metal temperatures

3 3 3 Assessment of Steam Turbine Generators and their Auxiliaries

There are two (2) steam turbine generators (each rated at 25 MW_e) in operation at the OSH TES Plant

Both turbines have a single cylinder which consists of a high pressure (HP), intermediate pressure (IP), and a low pressure (LP) section The steam from the steam generators is supplied to the steam chest through a stop valve The design main steam pressure and temperature for these units are 90 kg/cm^2g and 535°C respectively These units are the same type as Units 1 and 2 at the Bishkek TES 1

The original installed electrical capacity of the station was 50 MW_E Currently, the station can produce a maximum of 43 MW_E , this is a 14% decrease in the design output The decrease in electrical output is due to the high sulphur content in the mazut and the decreased steaming capacity of the boilers The electric power is transmitted from the plant via 110 kV transmission lines The power is then distributed through 6 kV, 35 kV, and 110 kV distribution lines

Both turbine generators at the Osh TES plant have been in operation in access of 149,000 hours Because the steam boilers, turbines and high pressure steam piping are close to reaching the end of its useful life, the TES plant should institute a systematic equipment condition monitoring program to prevent accidents and to ensure safe operation of the plant

The monitoring program should include ultrasonic and dry penetrant testing to monitor the wall thickness and crack propagation of critical high pressure components including main steam piping elbows

The most important parts the conditions of which must be monitored are the thick walled pressure parts of boilers (superheater headers, the boiler drum, desuperheaters, etc), turbines HP shell, IP shell, nozzle block,steam chest, valves, etc) as well as the main steam piping components The purpose of the monitoring is to avoid or minimize unplanned shutdowns due to equipment failure, to avoid potential accidents, and to be able to plan maintenance activities most effectively Predictive maintenance program (PDM) should also be instituted This program includes equipment history, monitoring, analysis, scheduling, and documentation It also coordinates maintenance resources with operations The results target equipment maintenance that could compromise performance or safety, prevent, excessive inspections and repairs, and has minimum impact on power and thermal energy production

In order to accomplish all testing that is required, and to do it in an efficient way, it is necessary that the plant laboratory be equipped with modern western testing equipment It is recommended that the following equipment be procured by the plant

Ultrasonic flaw detectors
Ultrasonic thickness gages
Magnetoscope
Spectrum analyzer
Portable microscope
Hardness testers
Boroscope
Eddy current inspection devices
Thermographic Inspection Equipment
Radiographic Equipment
Equipment for Replication Method Realization

3 3 4 Assessment of Osh District Heating System

The thermal output of the OSH TES station has not changed from its original installed capacity The current thermal output is 350 7 Gcal/h, which includes 150 7 Gcal/h from turbine exhaust extractions Industrial steam customers are supplied steam at a pressure of 8 kg/m^2 and a temperature range of 250 to 300 °C The district heating system uses hot water and operates on a open loop The district heating hotwater system operates with a pressure of 8 kg/m^2 and a temperature range of 150°C The district heating and industrial steam piping has a total length of 29 3 km The industrial steam lines acount for 5 km of this total, and range in diameter from 219 to 426 mm The other 24 3 km are district heating lines

268

with diameters from 328 to 712 mm The table below provides the diameters and length of the hot water lines

Line Size (mm)	Length (km)
712	6 3
623	0 065
522	7 148
429	2 755
426	1 834
328	6 219
TOTAL	24 321

Other district heating components include

Three main district heating heaters, PSV-500-3-23

- One peaking heater, PSV-500-14-23
- Two vacuum deaerators, DSV-800
- Three condensate pumps
- Six district heating pumps

In 1985, the USSR Ministry of Energy had approved a plant expansion to be implemented by 1995 This expansion was needed due to an increase of the Osh city residential area which resulted in an increase in the heat demand It was decided to install three steam boilers of the type E-160-14 (natural circulation, 160 tons/h steam output, 14 atmg final steam pressure) for increased plant thermal output This would have increased the total heat output of the plant by 1 8 Million Gcal per year Construction of these boilers was started The boiler house structure main frame has been erected and the chimney foundation has been installed In addition, some components of the boilers are on the site However, further construction has stopped due to lack of financial support from the Kyrgyz government

269

4.0 ELECTRICAL TRANSMISSION AND DISTRIBUTION SYSTEMS

4.1 Introduction

This section presents the results and findings from a study conducted to 1) evaluate the condition of the existing transmission and distribution system in Kyrgyzstan and 2) develop plans to improve the performance and reliability of the transmission and distribution system for a ten year planning horizon The transmission and distribution system consists of numerous pieces of electrical equipment and apparatus that are planned and designed to work together to provide reliable service to consumers The approved scope of the study involved assessments of the condition of the facilities serving the city of Bishkek and a rural area that was viewed to be representative of other areas of the country The results of the study of the City and rural area provided the basis to extrapolate the findings to other parts of Kyrgyzstan

The economies of Kyrgyzstan and neighboring countries are in a state of transition brought about by the collapse of the former Soviet Union Disruptions in fuel supply, industrial plant closures, population migration and other changes have created a difficult environment in which to plan improvements to the electrical transmission and distribution system Many reinforcement plans exist that preceded the changes now taking place in Kyrgyzstan and surrounding regions The basic assumptions underlying plans involving extra-high voltage (220 kV and 500 kV) transmission facilities have changed since many plans for Kyrgyzstan and other countries were developed without regard to national priorities or boundaries The basic assumptions underlying plans involving lower voltage (110 kV and 35 kV) transmission systems and distribution facilities (6 kV or 10 kV) have also changed as the intensity of loads at existing manufacturing plants, residential areas and other facilities driving electrical demand evolve in the new economic environment

The operation, maintenance and planning of electric power systems is a continuous process This report presents the results of a study that relied on information that reflects the most recent operation of this complex system In addition, forecasts of the future demand were developed to assess the future performance of the system in view of the dramatic changes occurring in the economy which materially affect the operation and performance of the power system The transmission investment program extracted from this study consists of high priority improvements that are needed based on actual performance and the most current forecasts of future demands

The forecasts of electrical demand provide the basis to determine the adequacy or inadequacy of the existing power system facilities to meet the expected demand Unlike generation planning which depends on the forecasts of energy consumption and load characteristics over different load cycles, i e , periods of time, transmission system planning depends more on the forecasts of peak, i e , maximum demand, and the state of the generation and transmission system, i e , facilities that are in or out of service regardless of cause of the outage Usually planning criteria are established to judge the adequacy or inadequacy of the expected transmission system performance Such criteria would include loading criteria for transmission lines and transformers under different operating conditions, thresholds of high or low substation voltages that are judged to be acceptable or unacceptable and so forth Ideally the transmission system

is planned to provide margins to accommodate outages of transmission and/or generation facilities These are not normal or ideal times The power system in Kyrgyzstan has suffered from a lack of spare parts, maintenance, capital and fuel supplies It is instructive to review the actual patterns of energy consumption and the maximum demands, before discussing the condition and operation of the facilities comprising the Kyrgyzstan power system

4.2 Electric Power Demand and Energy Forecasts

During the 1990s, there have been dramatic changes in the economy and the electrical requirements of the Kyrgyz Republic The break-up of the former Soviet Union had a monumental effect on the economy of Kyrgyzstan and all other newly independent countries in this region The changing economic base in turn affects the electric requirements of all consumers in the republic There have been rapid changes in industrial production and electric energy consumption Residential use of electricity for heating and cooking has substantially increased thereby also affecting the electric requirements and patterns of consumption

These changes will continue to strongly influence the electricity requirements of the Kyrgyz Republic The unsettled nature of the economy and the rapidly changing electricity consumption patterns render forecasts of electric consumption and economic growth uncertain The following will discuss the economy, population, electric energy consumption and peak demand for the Kyrgyz Republic

4.2.1 Economy

Employment Trends 1985-1994

The transition from a command economy to a market economy has been and will continue to be a painful process for the Kyrgyz Republic and other CIS countries Industries, which are no longer subsidized and protected by the Soviet Union, must be able to survive in a more competitive market place The short-term effect has been dramatic job losses in the industrial sector, with other sectors of the economy being affected to a lesser degree

As seen on Exhibit 4 2 1 1, manufacturing employment has declined precipitously since the Kyrgyz Republic declared its independence from the former Soviet Union Between 1991 and 1994, manufacturing employment declined from 332,800 workers to 241,200 workers, or an average annual rate of decline of 10 percent The manufacturing sector has been affected by inadequate supplies, reduced markets and defense related plant closures (particularly within the Bishkek area) For example, the clothing and footwear industries, which account for about one-fourth of the manufacturing employment, have been severely affected by inadequate internal demand and competition from foreign producers In addition, production in these industries is affected by raw material supply problems, which arose due to economic ties with CIS countries being loosened as a result of the break-up of the Soviet Union Payments for these goods and supplies are also being affected by currency exchange problems

27'

Exhibit 4 2 1 1

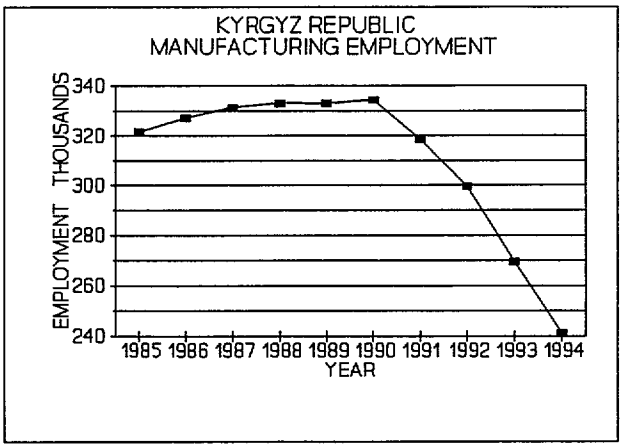

"Other material production" employment includes agriculture, forestry, transport, communication, construction, trade and other types of activity included in the material production sphere As seen on Exhibit 4 2 1 2, since 1991 other material production employment has experienced years with increasing employment and years of decreasing employment, with this pattern being largely driven by changes in the agricultural sector Between 1991 and 1994, other material production employment showed a slight increase from 973,000 in 1991 to 978,400 in 1994 or an average annual rate of increase of less than 1 percent The agriculture portion of this employment grouping performed better than other sectors, with it increasing by more than 60,000 workers during this period Other sectors, such as construction, have performed poorly during this time frame It would be expected that the number of construction projects would decrease without the resources of the Soviet Union backing them

Exhibit 4 2 1 2

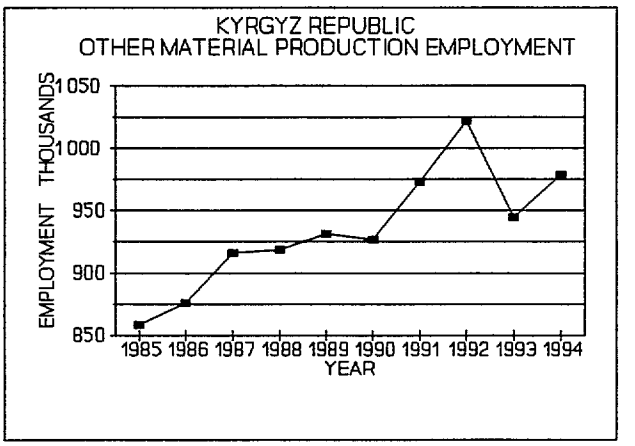

"Non-material employment" includes health, athletics and social security, education, culture and art, science and science services, and other types of non-material employment As depicted on Exhibit 4 2 1 3, non-material employment has declined sharply since 1992 as the Soviet Union's

-72

subsidies for these largely social programs have ended Between 1991 and 1994, non-material production employment declined from 462,300 workers in 1991 to 425,800 workers in 1994, which reflects an average annual rate of decline of 3 percent The recent employment decreases in this sector are a sharp contrast to the steady increases experienced from 1985 through the break-up of the Soviet Union The Kyrgyz Republic does not have the resources to fully maintain social programs without subsidization from the Soviet Union

Exhibit 4 2 1 3

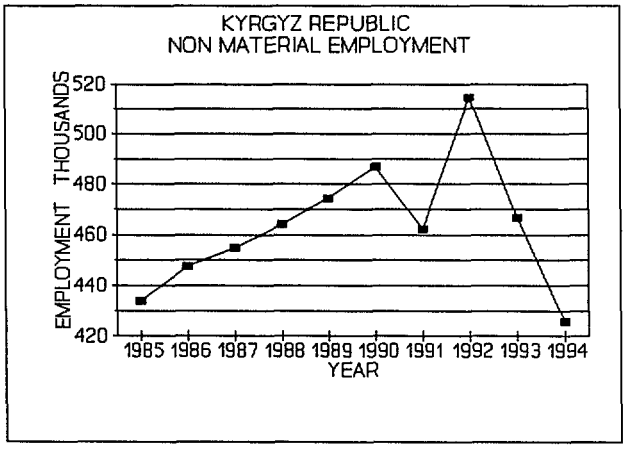

Total employment reflects the summation of the three major categories discussed above As would be expected (See Exhibit 4 2 1 4), there have been sharp decreases in total employment in the Kyrgyz Republic since the declaration of its independence from the former Soviet Union in 1991 Between 1991 and 1994, total employment decreased from 1,754,600 workers in 1991 to 1,645,400 workers in 1994, which represents an average annual rate of decline of 2 percent As mentioned above, the transition to a market economy has not been painless, with more than 100,000 jobs or 6% of 1991 employment having been displaced There could be additional job losses as attempts are made to build a more efficient economic system

Exhibit 4 2 1 4

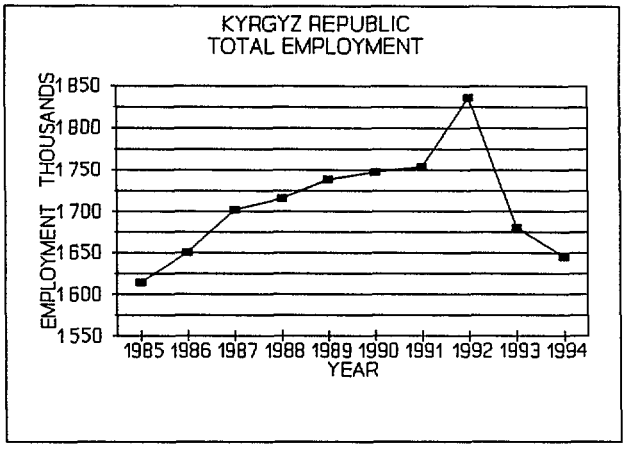

272

Employment Forecast 1995-2000

There are several factors, in addition to the break-up of the Soviet Union, that have slowed economic growth in the Kyrgyz Republic Some of the following factors may be indirectly tied to the break-up (1) material shortages and decreased demand for finished products have had adverse effects primarily on the industrial sector, (2) the technical equipment used in production is obsolete and worn out, (3) high inflation rates affect every facet of the economy and seriously dampen investment activity, (4) there are lags in the enforcement of an active industrial policy and elimination of non-profitable and ineffective activities, (5) engineers and other technical experts have left the country, (6) there has been insufficient progress towards privatization, and finally (7) the current lack of competitiveness in some production of goods and services

The government of the Kyrgyz Republic has developed plans in order to revitalize the country's economy There are essentially two stages of economic and social development planned They involve (1) macroeconomic stabilization during the 1994 through 1996 period and (2) balanced economic development during the 1997 through 2000 planning period

Several policies have been identified with implementation strategies for the period of macroeconomic stabilization There are plans to use budgeting and tax policies to encourage development The agricultural industry, as well as other sectors of the economy, will become more market oriented as prices are allowed to more reflect a competitive market

Increased development is expected to positively affect foreign trade and payment balances There will be attempts to make investments in the Kyrgyz Republic more attractive to foreign investors Plans to reform property ownership will be developed to encourage investment in local projects With regard to privatization plans, the short-run and longer-run plans call for greater encouragement of small and medium sized businesses A vital goal for the economy is to stabilize the rate of inflation at an acceptable level, which will benefit the standard of living for the residents and provide some economic stability for local businesses

During the second stage, the goals are more long-term in nature There is a desire to have a restructuring of the economy so there will be stable economic growth in all sectors of the economy The government hopes to have a zero trade deficit by the turn of the century The expectations are that by 2000, the economy will be vibrant enough to raise the standard of living for the general population

The goals set forth for the revitalization of the Kyrgyz Republic are generally worthwhile They may be somewhat ambitious to achieve, however, in a relatively short period of time There is some discussion of the Kyrgyz Republic becoming self-sufficient for many of its basic requirements Such a goal is understandable It may be more desirable for the Kyrgyz Republic and other CIS countries to manage and take advantage of whatever comparative advantage each country has in producing goods For example, the Kyrgyz Republic, which has a comparative advantage (currently a surplus) in the generation of electricity, should generate electricity not only to meet its internal needs, but also to sell to neighboring (debtor) countries Likewise, a neighboring country may have a comparative advantage in producing other goods that it can trade with the Kyrgyz Republic Due in part to the fact that the Republic is land-locked, it

would be expected that the primary trading partners for the Kyrgyz Republic will be other CIS countries, with some possibilities for increased trade with Pakistan, India and China

The plans for expanding the agricultural and industrial sectors are intertwined, as much of the planned industrial expansion will require increased agricultural expansion For example, the planned expansion of cigarette production will rely on increased production of locally grown tobacco The tobacco industry will supply local needs and is expected to also become an export good Other agricultural production is expected to be expanded to meet local needs of manufactured products, such as, sugar beets for sugar, and other crops to produce vegetable oil

The clothing and footwear industries have been adversely affected by inadequate supplies of raw materials In response to this, there are plans to expand the cotton farming and build fur and leather factories during the 1994 through 1996 period There are also plans to expand into the woolen and silk industries, which would require acquisition of skills associated with silk worm cultivation

Industrial development is being explored in the area of electro-mechanical and electronic industries There is a desire to enter into the production of poly- and mono-crystal silicon Along those lines there are plans to construct and commission a micro-circuit plant Other areas of development to be considered include the production of electronic devices for energy, communications, machine building, agriculture and other branches of industry

In the fuel, energy and mining industries, there are plans for expansion of these sectors The government has plans for increased hydro energy production with the completion of hydro power plants, which may produce enough power to serve not only the needs of the Kyrgyz Republic, but also allow for exports to neighboring countries There is also a desire to expand coal mining and find oil reserves in order to be self-sufficient in energy production The Republic will, however, continue to be a net energy importer for the foreseeable future Foreign investors have expressed interest and made commitments to develop the mines for the production of gold, tin and uranium

With all of these programs taken into consideration, the forecast developed for Burns and Roe (See Exhibit 4 2 1 5) indicates that manufacturing employment will rise from 241,200 workers in 1994 to 310,000 workers in 2000, which reflects an average annual growth rate of over 4 percent per year It should be noted that this forecast suggested the 1994 employment would sink to 204,000 workers, which would result in a much higher growth rate in the forecast These forecasts are ambitious and depend on significant foreign investment, which may not be forthcoming

Exhibit 4 2 1 5

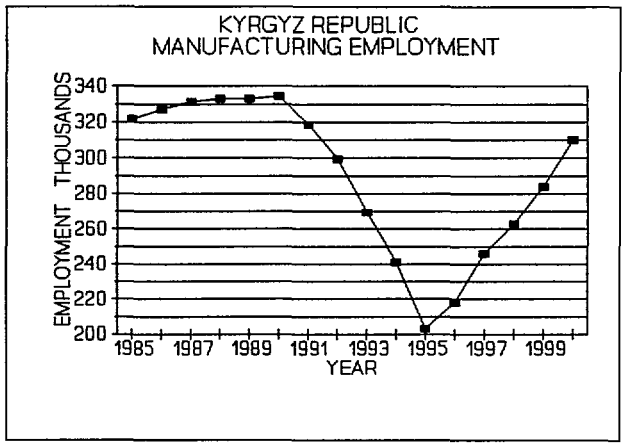

Other plans are expected to influence other material production employment As mentioned above, there are plans to expand production in the agricultural industry, including cotton, tobacco, sugar beets, oil bearing plants, and other vegetables and fruits The sheep and cattle industries are important as they provide meat, along with wool and leather for industrial uses The agricultural industry has the largest share of this sector's employment and will play a vital role in the future development of the Kyrgyz Republic

The construction industry will depend largely on the amount of financing that can be attained to construct new plants in the Republic Another area of potential development is tourist trade, which would take advantage of the scenic beauty in this region Mountain climbing, skiing, whitewater rafting, hunting and fishing are just a few of the leisure activities ripe for development to attract foreigners to the natural wonders available in this rugged country With respect to increased tourist trade, it must be evaluated whether there are adequate incentives for tourists to travel to the country and whether the travel infrastructure and accommodations are adequate

As depicted in Exhibit 4 2 1 6, the forecast projects that other material employment will decline at an average annual rate of 6 percent over the 1994 through 2000 forecast period The agricultural sector is projected to see employment growth during this period, as production is expanded to meet the needs of expanded manufacturing activity and to better meet the internal needs of the populace Likewise, the construction industry is expected to see some recovery, as building activity increases in response to an expected increase in industrial activity The other productive employment, which includes trade and other commercial activity, is projected to decrease dramatically during this period, which seems somewhat counter-intuitive As the country moves more towards a market driven economy, it would be expected that trade and service employment would also increase In addition, the projected increases in manufacturing and agricultural activity would also spur more activity in the commercial sectors

276

Exhibit 4 2 1 6

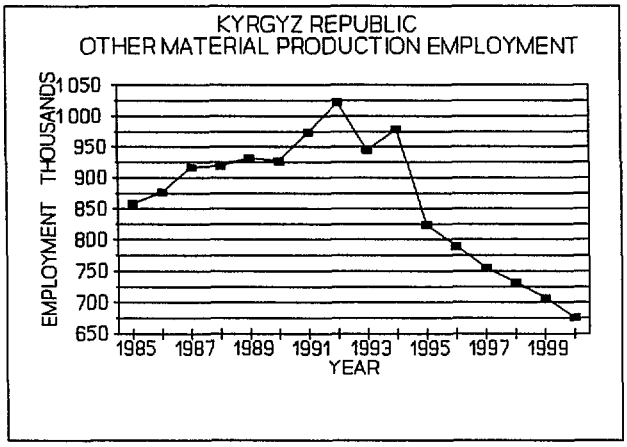

No dramatic changes in the non-material employment sector are expected Government employment is expected to decrease as it becomes more efficient and loses responsibilities through privatization initiatives throughout the country The health needs will continue to be met, with little change in employment expected Education, especially at the undergraduate and graduate level, will be emphasized to ensure there is adequate technical capability for the country to move forward In addition, the greater need for technically trained individuals is influenced by the emigration of such people after the break-up of the Soviet Union As shown on Exhibit 4 2 1 7, non-material employment is expected to decline slowly over the forecast period

Exhibit 4 2 1 7

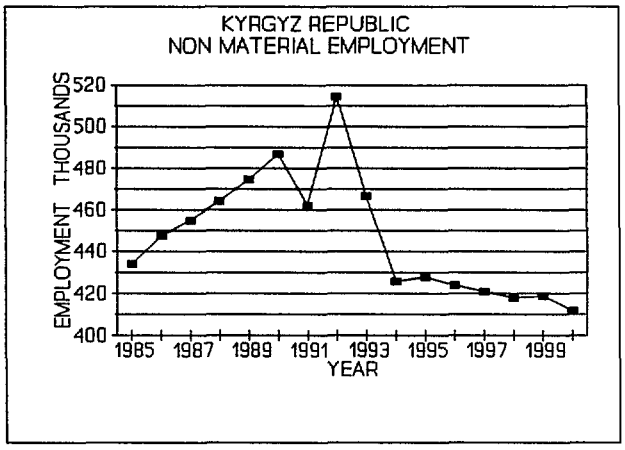

Taking all of the factors into consideration, total employment is projected to decrease slowly over the forecast period (See Exhibit 4 2 1 8) It is appropriate to expect some stabilization of employment over the forecast period However, the total employment forecast may be somewhat conservative, with some growth in total employment over this period also a distinct possibility

217

Exhibit 4 2 1 8

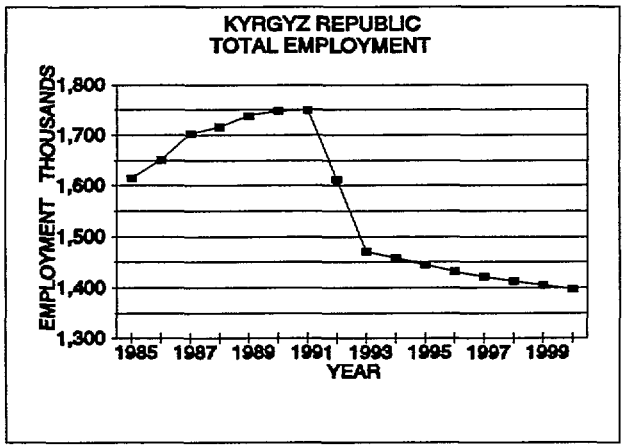

4.2.2 Population

Population Trends 1985-1995

On January 1, 1995 population for the Kyrgyz Republic was 4,483,400, with 1,574,500 (or 35 percent) being urban residents and 2,908,900 living in rural areas Between 1980 and 1990, population increased at an average annual rate of 2 percent The rate of population growth slowed to about one-half of a percent per year between 1990 and 1995, as there was significant out-migration after the Republic declared independence These changes are shown on Exhibit 4 2 2 1

Exhibit 4 2 2 1

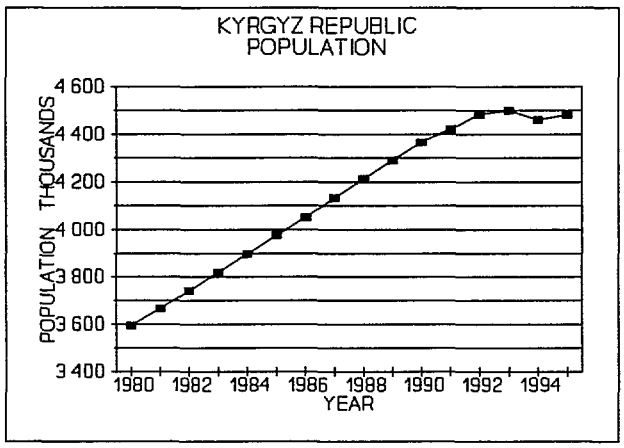

The Northern region of the Kyrgyz Republic had a population of 2,241,300 on January 1, 1995 The Northern region includes Bishkek city, Chu, Issyk-Kul, Naryn, and Talas oblasts Urban residents account for approximately 44 percent of population in these districts As shown on Exhibit 4 2 2 2, between 1990 and 1995, population declined by nearly 60,000 people, with this area experiencing out-migration in the wake of the break-up of the Soviet Union

Exhibit 4 2 2 2

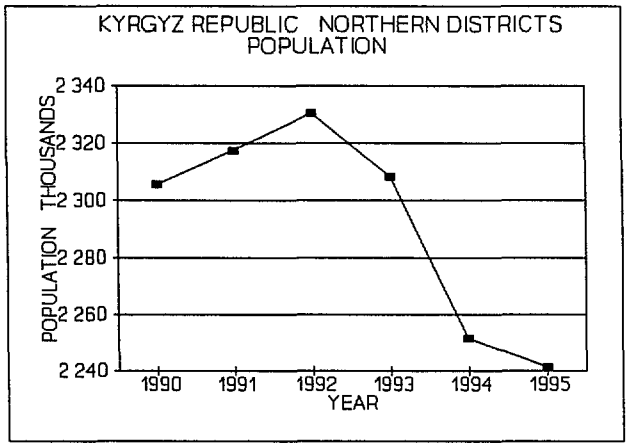

The Southern region, which is comprised of the Osh and Jalal Abad oblasts, had a population of 2,242,100 on January 1, 1995 This region is less urbanized than the Northern region, with only 26 percents of the people being classified as urban dwellers As depicted on Exhibit 4 2 2 3, this region had a population increase of approximately 180,000 between 1990 and 1995 In contrast to the Northern region, there has not been significant out-migration from the Southern region

Exhibit 4 2 2 3

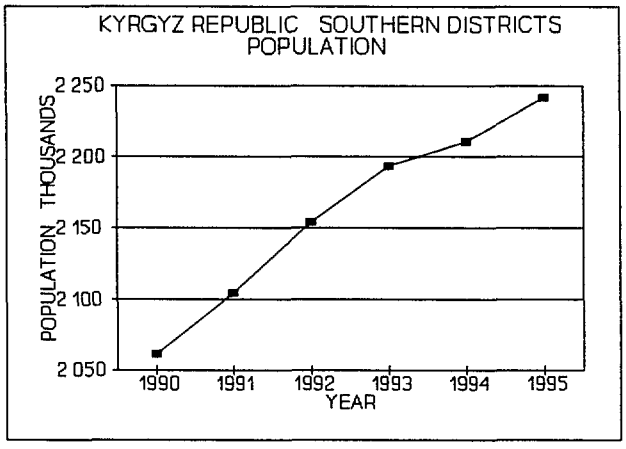

On January 1, 1995, Bishkek city and Chu oblast had populations of 599,500 and 750,600, respectively Bishkek is very urbanized, with over 99 percent of the population being classified as urban By contrast, the Chu oblast had only 24 percent of its population listed as urban dwellers However, the two districts have experienced similar population declines since 1990, with both districts' population declining at an average annual rate of 1 percent per year Both districts have experienced significant out-migration during this period Graphical depictions of the changes experienced by Bishkek and Chu districts are provided in Exhibits 4 2 2 4 and 4 2 2 5, respectively

Exhibit 4 2 2 4

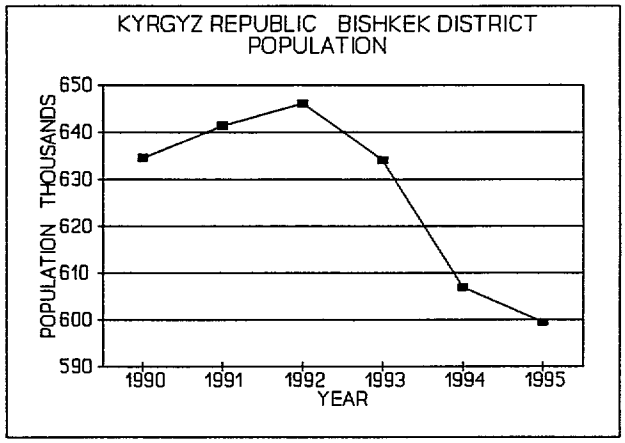

Exhibit 4 2 2 5

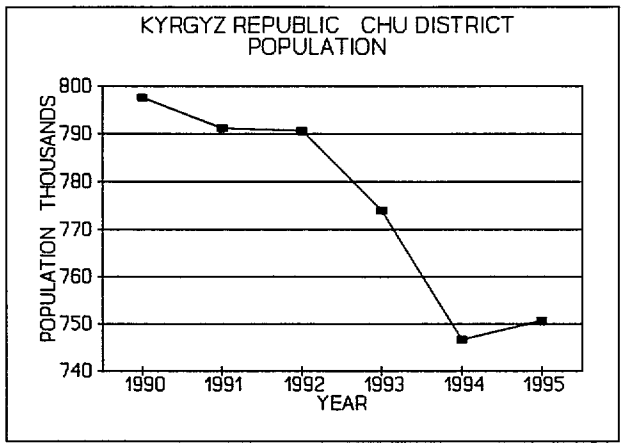

Population Forecast 1995-2000

The population forecast developed for Burns and Roe and presented in Exhibit 4 2 2 6 projects that population will decline slowly over the forecast period, as out-migration and deaths out pace births and in-migration It should be noted that this forecast may be somewhat conservative, since actual population estimates for 1995 are higher than projected in the forecast

250

Exhibit 4 2 2 6

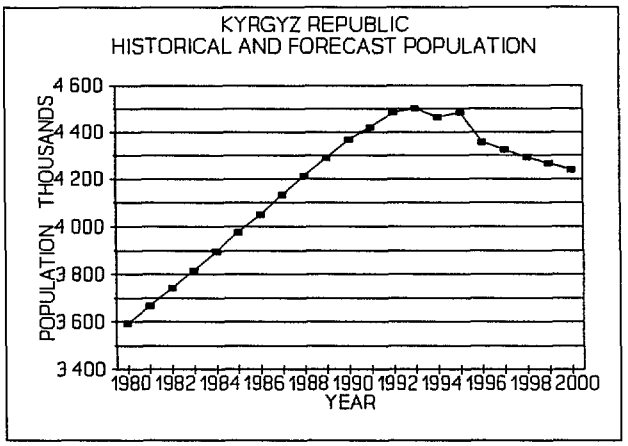

As shown on Exhibit 4 2 2 7, population in the Northern region is projected to decline to 1,935,000 people by the year 2000 However, it may not decline as rapidly as this projection portrays, because the forecast for 1995 overstated the decline in population in these districts The Southern region is projected to increase to 2,305,000 by the year 2000 (See Exhibit 4 2 2 8), with this being a somewhat conservative forecast as population grew faster than expected in 1995

Exhibit 4 2 2 7

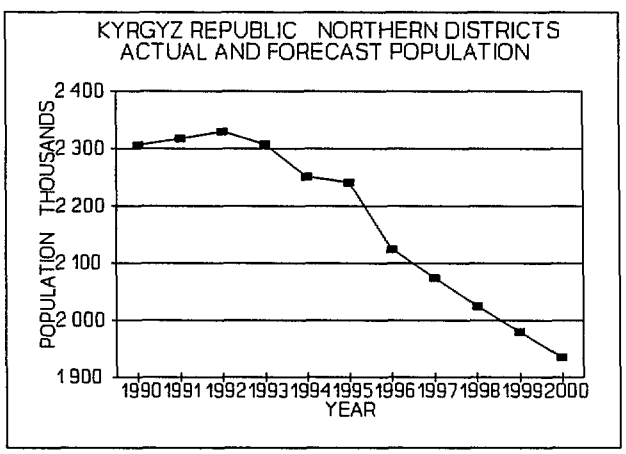

281

Exhibit 4 2 2 8

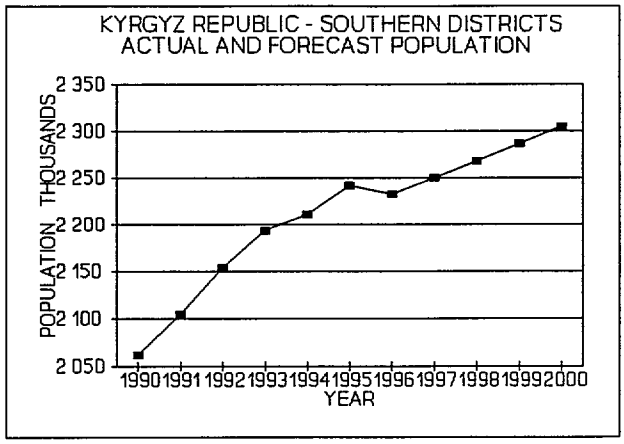

Exhibits 4 2 2 9 and 4 2 2 10 provide the population forecasts for the Bishkek and Chu districts, respectively Bishkek's population is projected to decline to 461,000 by the 2000, while Chu's population is forecast to drop to 597,000 over the same period These forecasts appear to portray too great of a decline in light of the 1995 experience, which showed population leveling off somewhat in these districts

Exhibit 4 2 2 9

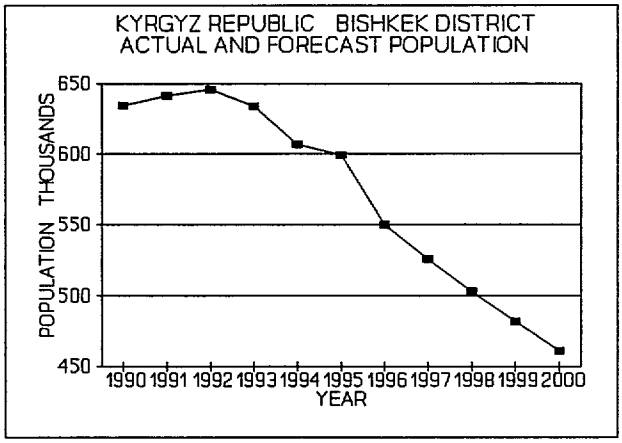

282

Exhibit 4 2 2 10

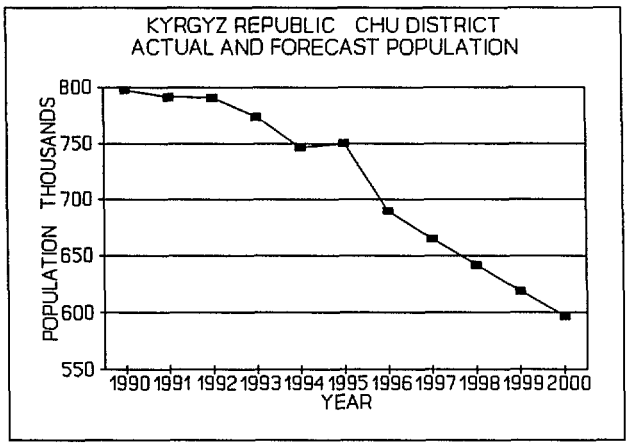

4 2.3 Electric Energy Consumption

Electric Energy Consumption Trends 1973-1994

Residential or population electric energy consumption, which is depicted in Exhibit 4 2 3 1, has grown rapidly since 1973 Between 1973 and 1990, energy consumption by households increased at an average annual rate of 6 9 percent Over the 1991 through 1994 period, the average annual growth rate of consumption increased to 29 5 percent, with acceleration in rates of consumption being attributed to the increased usage of electricity as a source for home heating and cooking Many of the urban residents have typically relied on hot water for heating, but this consumption pattern is changing rapidly There has also been increased electrification in the rural areas of the country This increased consumption by the residential sector will have a very distinct effect on the seasonal demands for the Kyrgyz Republic and the electric distribution companies within it To better appreciate the rapid growth in residential electric energy consumption, consider that in 1990 it was the smallest consuming sector and comprised 14 5% of total electric energy consumption in the republic By 1994, it was the largest consuming sector and comprised 40 3% of total consumption

Exhibit 4 2 3 1

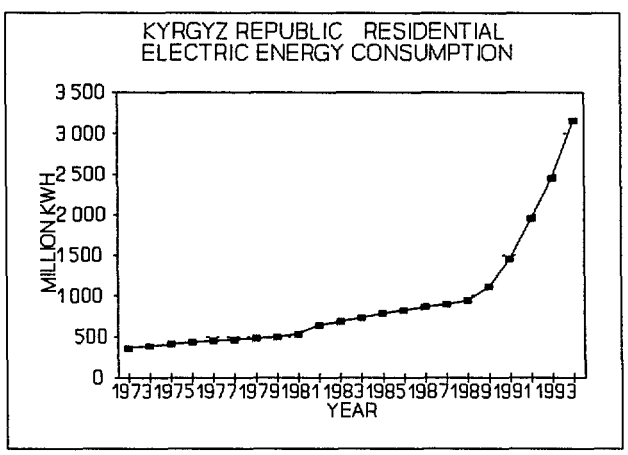

283

Exhibit 4 2 3 2 shows the historical electric energy consumption pattern for those parts of the economy included in other sectors, such as government facilities, schools, banks and so forth herein defined as "other" or "commercial" accounts Between 1973 and 1990, electric consumption in this category increased at an average annual rate of 5 3 percent Between 1991 and 1994, however, the consumption declined at an average annual rate of 1 7 percent per year, which reflects the effects of the economic upheaval that is being experienced during the transition period towards a market driven economy

Exhibit 4 2 3 2

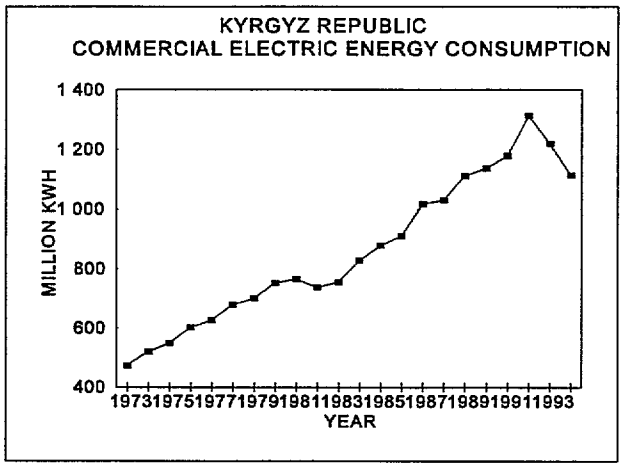

The electric energy consumption by the agricultural sector in the Kyrgyz Republic for the years 1973 through 1994 are depicted on Exhibit 4 2 3 3 Between 1973 and 1990, electric energy consumption increased at an average annual rate of 9 3 percent, with industries in this sector playing a vital role in the Kyrgyz economy When the economy slowed during the initial stages of the period of transition to a market economy, the electric energy consumption by the agricultural sector decreased at an average annual rate of 8 4 percent

Exhibit 4 2 3 3

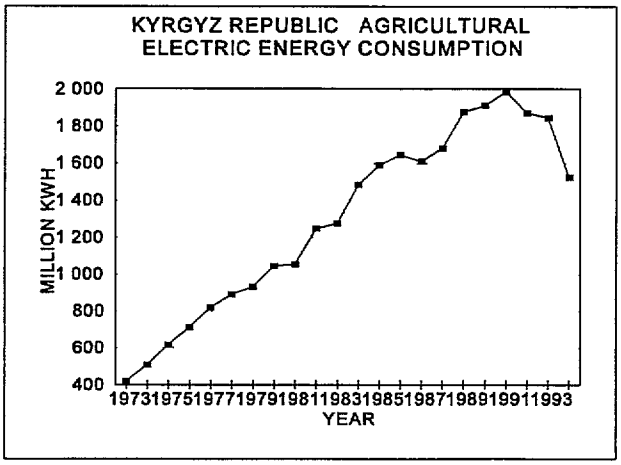

276

The electric energy consumption by the industrial sector for the period 1973 through 1994 is provided on Exhibit 4 2 3 4 Between 1973 and 1990, industrial electric energy consumption increased at an average annual rate of 3 6 percent The industrial production during this period was controlled by the Soviet Union and some inefficient plants were allowed to operate The local inefficient industries lost their federal government subsidies when Kyrgyzstan declared its independence from the Soviet Union In addition, the currency exchange problems and diminished need for defense related plants, as well as other factors described above, all combined to adversely affect the industrial sector Between 1991 and 1994, industrial electric energy consumption decreased at an average annual rate of 16 7 percent Sharp drops in consumption were experienced in the military machine building and electro-technology machine building industries which saw electric energy consumption decrease by 41 percent and 35 percent, respectively, between 1990 and 1992

Exhibit 4 2 3 4

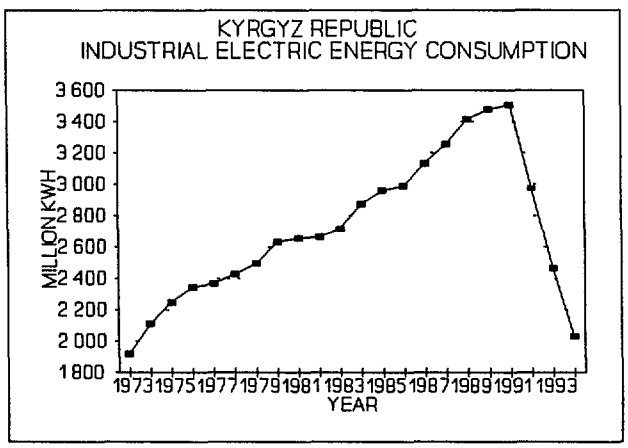

As shown on Exhibit 4 2 3 5, the total electric energy consumption in the Kyrgyz Republic increased at an average annual rate of 5 3 percent between 1973 and 1990 As previously discussed, sustained growth in electric energy consumption during the 1973 to 1990 period was experienced in all sectors of the economy During the transition period since independence (1991 to 1994), growth in total consumption decreased at a rate of 1 2 percent per year, with large decreases in the industrial and agricultural sectors more than offsetting the substantial gains experienced in the residential sector

285

Exhibit 4 2 3 5

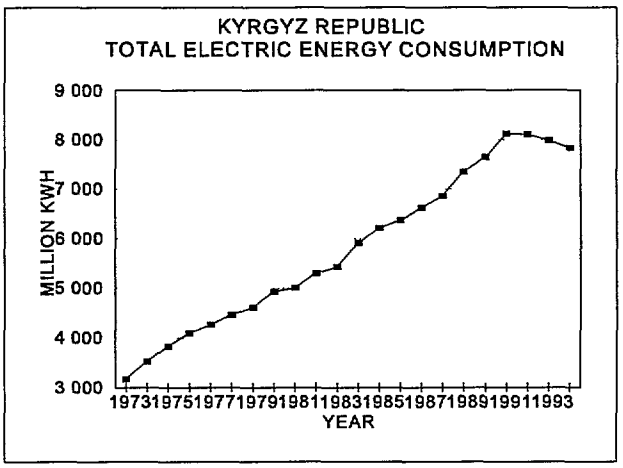

Electric Energy Consumption Forecast 1995-2005

The original forecast of residential electric energy consumption developed for Burns and Roe, was reduced to reflect slower growth for the first simonths of 1995 The growth in residential electric energy consumption is expected to slow to 2 1 percent per year, which is much slower than experienced during the 1991 through 1994 period There are forecasted increases in residential consumption in spite of a projected decrease in population over the same forecast period The forecast reduction in the rate of increase in consumption reflect improvements in district heating systems and increased availability of fuels

Exhibit 4 2 3 6

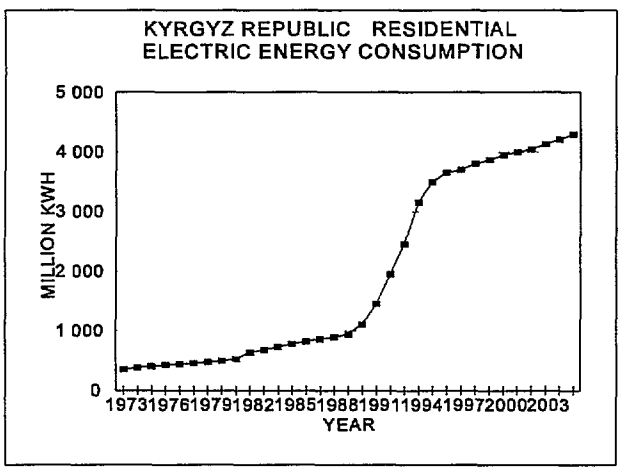

Depicted on Exhibit 4 2 3 7 is the forecast of commercial electric energy consumption in the Kyrgyz Republic During the 1995 through 2005 forecast period, commercial electric energy consumption is projected to increase at an average annual rate of 4 4 percent This forecasted growth is stronger than was experienced during the initial years of the transition period to a market economy, but weaker than the historical rate experienced prior to independence This

286

may be a conservative forecast, if the industrial and agricultural sectors of the economy expand as projected

Exhibit 4 2 3 7

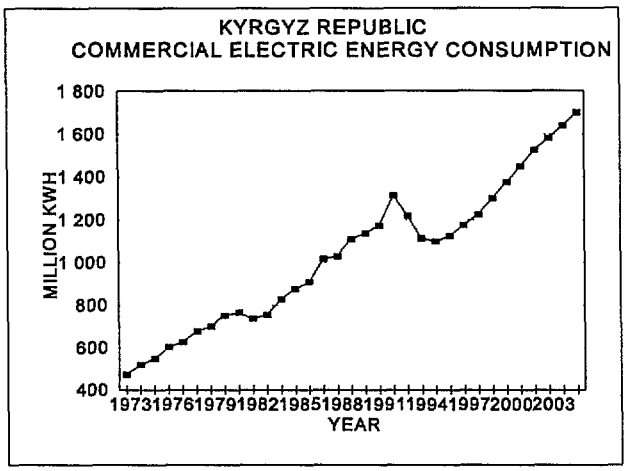

The forecast of agricultural electric energy consumption is provided on Exhibit 4 2 3 8 Agricultural electric energy consumption is projected to increase at an average annual rate of 4 4 percent, which reflects a rebound from the recent declines experienced in this sector

Exhibit 4 2 3 8

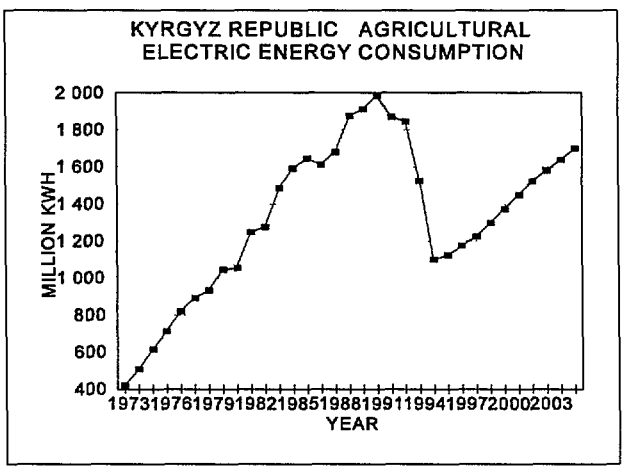

Shown on Exhibit 4 2 3 9 is the forecast of industrial electric energy consumption which was prepared for Burns and Roe During the 1995 through 2005 period, industrial consumption is projected to increase at an average annual rate of 2 5 percent However, there is slow growth expected in the near term, followed by a more robust expansion after the turn of the century The forecast provides a definitive reversal of fortunes for this sector of the economy The industrial forecast may be optimistic, as the industrial expansion requires many factors to fall into place including a great deal of foreign investment

28

Exhibit 4 2 3 9

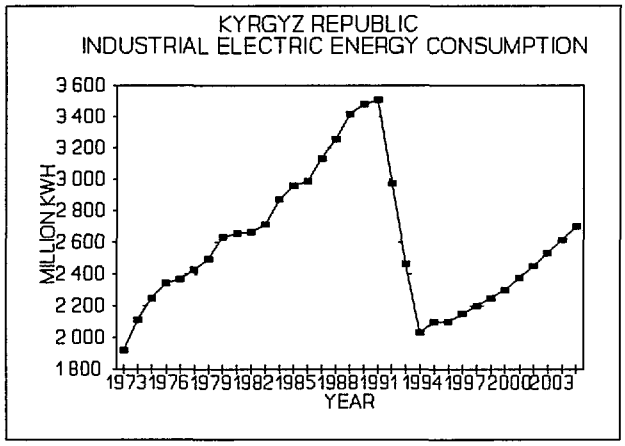

The total electric energy consumption forecast developed for Burns and Roe is shown on Exhibit 4 2 3 10 Between 1995 and 2005, total consumption is projected to grow at an average annual rate of 2 3 percent

Exhibit 4 2 3 10

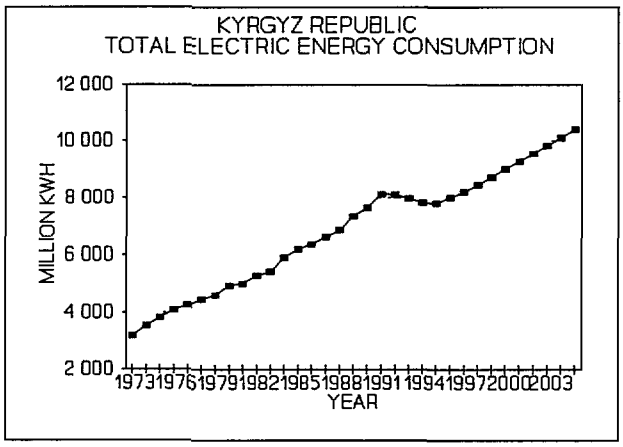

A tabular presentation of historical and forecast electric energy consumption is provided on Exhibit 4 2 3 11

Reasonableness of the Consumption Forecast

As a way to evaluate the forecast of electric energy consumption, an alternative set of forecasts developed by Harza Engineering Company (Harza) was attained and compared with the forecast developed for Burns and Roe The comparisons of electric energy consumption forecasts by sector are provided on Exhibit 4 2 3 12

Exhibit 4 2 3 11
Energy (Millions of KWH) Consumption by Sector
for the Kyrgyz Republic 1973 2006

Year	Residential	Growth Rate	Commercial	Growth Rate	Agricultural	Growth Rate	Industrial	Growth Rate	Total	Growth Rate
Actual										
1973	360		474		421		1 921		3 176	
1974	385	6 9	521	9 9	509	20 9	2 112	9 9	3 527	11 1
1975	414	7 5	550	5 6	616	21 0	2 249	6 5	3 829	8 6
1976	436	5 3	603	9 6	712	15 6	2 344	4 2	4 095	6 9
1977	452	3 7	628	4 1	819	15 0	2 369	1 1	4 268	4 2
1978	462	2 2	679	8 1	891	8 8	2 429	2 5	4 461	4 5
1979	482	4 3	702	3 4	933	4 7	2 497	2 8	4 614	3 4
1980	499	3 5	753	7 3	1 045	12 0	2 632	5 4	4 929	6 8
1981	532	6 6	766	1 7	1 055	1 0	2 655	0 9	5 008	1 6
1982	643	20 9	738	3 7	1 248	18 3	2 663	0 3	5 292	5 7
1983	685	6 5	755	2 3	1 277	2 3	2 714	1 9	5 431	2 6
1984	729	6 4	828	9 7	1 485	16 3	2 872	5 8	5 914	8 9
1985	783	7 4	878	6 0	1 591	7 1	2 960	3 1	6 212	5 0
1986	821	4 9	910	3 6	1 646	3 5	2 990	1 0	6 367	2 5
1987	862	5 0	1 018	11 9	1 611	2 1	3 134	4 8	6 625	4 1
1988	897	4 1	1 030	1 2	1 681	4 3	3 258	4 0	6 866	3 6
1989	945	5 4	1 111	7 9	1 876	11 6	3 417	4 9	7 349	7 0
1990	1 111	17 6	1 137	2 3	1 913	2 0	3 482	1 9	7 643	4 0
1991	1 455	31 0	1 174	3 3	1 986	3 8	3 509	0 8	8 124	6 3
1992	1 951	34 1	1 314	11 9	1 872	5 7	2 974	15 2	8 111	0 2
1993	2 455	25 8	1 220	7 2	1 846	1 4	2 464	17 1	7 985	1 6
1994	3 159	28 7	1 114	8 7	1 526	17 3	2 031	17 6	7 830	1 9
Forecast										
1995	3 500	10 8	1 100	1 3	1 100	27 9	2 100	3 4	7 800	0 4
1996	3 650	4 3	1 125	2 3	1 125	2 3	2 100	0 0	8 000	2 6
1997	3 700	1 4	1 175	4 4	1 175	4 4	2 150	2 4	8 200	2 5
1998	3 800	2 7	1 225	4 3	1 225	4 3	2 200	2 3	8 450	3 0
1999	3 875	2 0	1 300	6 1	1 300	6 1	2 250	2 3	8 725	3 3
2000	3 950	1 9	1 375	5 8	1 375	5 8	2 300	2 2	9 000	3 2
2001	4 000	1 3	1 450	5 5	1 450	5 5	2 375	3 3	9 275	3 1
2002	4 050	1 3	1 525	5 2	1 525	5 2	2 450	3 2	9 550	3 0
2003	4 132	2 0	1 581	3 7	1 581	3 7	2 531	3 3	9 825	2 9
2004	4 215	2 0	1 640	3 7	1 640	3 7	2 614	3 3	10 109	2 9
2005	4 300	2 0	1 700	3 7	1 700	3 7	2 700	3 3	10 400	2 9
Average Annual Growth Rate										
1973 94		10 9		4 2		6 3		0 3		4 4
1973 90		6 9		5 3		9 3		3 6		5 3
1991 94		29 5		1 7		8 4		16 7		1 2
1995 2005		2 1		4 4		4 4		2 5		2 3

Data Sources Harza Engineering Company Evaluation of the Hydroelectric Development Program of Kyrgyzstan November 1993 and data collected and forecast for Burns and Roe Company

281

Exhibit 4 2 3 12
Kyrgyz Republic
Comparison of Historical and Forecast Energy Consumption

Year	Historical	Harza Low	Harza Moderate	Harza High	Burns & Roe
		Residential Electric Energy Consumption*			
Actual					
1980	499				
1985	783				
1990	1 111				
1994	3,159				
Forecast					
1995		2 920	3 900	2 970	3 500
2000		4 300	5 200	5 730	3 950
		Commercial Electric Energy Consumption			
Actual					
1980	753				
1985	878				
1990	1 137				
1994	1,114				
Forecast					
1995		1 200	1 350	1 370	1 100
2000		1 390	1 700	1 750	1 375
		Agricultural Electric Energy Consumption			
Actual					
1980	1 045				
1985	1 591				
1990	1 913				
1994	1,526				
Forecast					
1995		1 400	1 680	1 870	1 100
2000		1 800	2 250	2 750	1 375
		Industrial Electric Energy Consumption			
Actual					
1980	2 632				
1985	2 960				
1990	3 482				
1994	2,031				
Forecast					
1995		1 800	2 220	3 350	2 100
2000		2 100	2 600	4 400	2 300
		Total Electric Energy Consumption			
Actual					
1980	4 929				
1985	6 212				
1990	7 643				
1994	7,830				
Forecast					
1995		7 320	9 150	10 070	7 800
2000		9 590	11 750	15 000	9 000

Data Sources Harza Engineering Company Evaluation of the Hydroelectric Development Program of Kyrgyzstan" November 1993 and Data Collected and Forecast for Burns and Roe Company

Note *The apparent inconsistency of Harza's 1995 residential moderate forecast being greater than Harza's 1995 residential high forecast is as it was printed in Harza's Final Report

290

The residential electric energy consumption forecast developed for Burns and Roe projects a level of consumption of 3,950 million kWH in the year 2000 The Harza low, moderate and high forecasts for the same year are 4,300 million kWH, 5,200 million kWH and 5,730 million kWH, respectively The Burns and Roe forecast, which was developed after the Harza forecast was reported, is below Harza's low forecast

The Burns and Roe commercial electric energy consumption forecast expects consumption to be 1,375 million kWH in the year 2000 Harza's low, moderate and high forecasts for 2000 are 1,390 million kWH, 1,680 million kWH and 1,750 million kWH, respectively As with the residential sector, the commercial forecast is below the low forecast developed by Harza

Burns and Roe's agricultural electric energy consumption forecast for the year 2000 is 1,375 million kWH The low, moderate and high forecasts developed by Harza for the agricultural sector are 1,800 million kWH, 2,250 million kWH and 2,750 million kWH, respectively Similar to the residential and commercial sectors, the Burns and Roe forecast falls below Harza's low forecast

The industrial electric energy consumption forecast developed for Burns and Roe projects consumption to be 2,300 million kWH in the year 2000 Harza's low, moderate and high forecasts project industrial consumption in 2000 to be 2,100 million kWH, 2,600 million kWH and 4,400 million kWH, respectively Contrary to the other sectors, the Burns and Roe forecast falls between Harza's low and moderate forecasts

Burns and Roe's total electric energy consumption forecast projects that consumption will be 9,000 million kWH in the year 2000 The Harza forecast for the year 2000 expects total consumption for the low, moderate and high scenarios will be 9,590 million kWH, 11,750 million kWH and 15,000 million kWH, respectively As would be expected, the total forecast is below Harza's low forecast This pattern suggests the Burns and Roe forecast is not overly optimistic, in fact, it may be considered very conservative However, another factor should also be considered This forecast could reflect a softening of the outlook for the Kyrgyz Republic during the interval between development of the two sets of forecasts, i e , the economic and energy outlook could have worsened during the intervening time period

4 2 4 Peak Demand

Peak Demand Trends 1989-1995

The Kyrgyz power system is historically a winter peaking system The shifting patterns of energy consumption, unavailability of fossil fuels for power plant and heat only boilers, and unreliability of district heating systems have resulted in driving the winter maximum demands to levels much greater than summer demands The diversity between the winter peak and summer peak demand in 1994 approached a factor of two This from past experience (prior to 1991) when the diversity between winter and summer peak loads was in the range of 25 to 35 percent is expected to reverse itself if fuel becomes available and facilities are rehabilitated

The transmission system in Kyrgyzstan is most heavily stressed in the winter period due to the substantially larger loads experienced in winter The following sections present peak load data experienced in the Republic and the regional transmission companies in the period January 1, 1989 to May 31, 1995 It is readily apparent from this data that the loadings on the transmission and distribution system have significantly increased in the winter months For this reason, the power flow studies conducted to simulate and evaluate the expected performance of the transmission system in Kyrgyzstan modeled projected winter peak conditions for winters 1997/98, 2000/01 and 2005/06

Exhibit 4 2 4 1 presents a comparison of average monthly peak demands for the Kyrgyz Republic for the 1989 through 1991 and January 1993 through May 1995 periods These two periods were selected in order to see what monthly changes have occurred since the Kyrgyz Republic's independence from the Soviet Union During this period two trends have emerged, the winter months are having much higher peaks, while the summer months are experiencing somewhat lower peaks This pattern of change reflects the increased utilization of electricity for heating and cooking by households and the decreased demand by industrial consumers These data also provide evidence that the load is winter critical and becoming more so over time

Exhibit 4 2 4 1

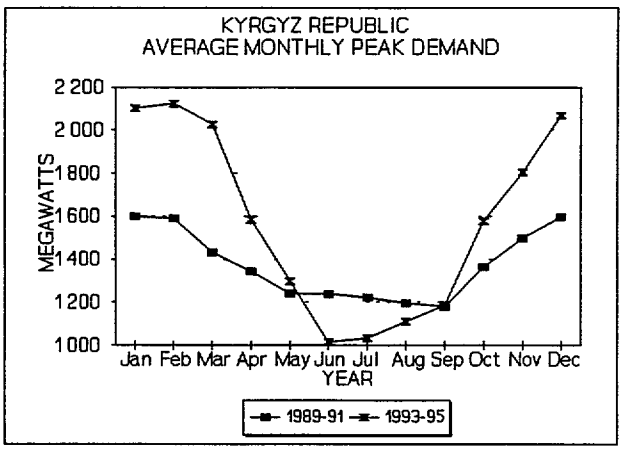

The foregoing chart demonstrates graphically the increase in winter peak demands for the entire Republic Similar graphs for each of the regional transmission companies, and for the Northern and Southern regions are provided in Appendix A A review of those graphs will reveal a similar trend has emerged in every regional company Since the Bishkek and Chu Companies were the principal focus of the detailed transmission study, the graphs for those areas are described below

Average monthly peak demands for the Bishkek Electric Network for the years 1989 through 1991 and the period January 1993 through May 1995 are shown on Exhibit 4 2 4 2 This area has not seen increases in peak demand in the winter months as sharp as was discussed above The summer months exhibit a sharper decrease in peak demand This pattern reflects the industrial losses in this area, particularly in defense related production It should be noted that

peak demands for the Bishkek Electric Network are not coincident with the peak demand for the country as a whole

Exhibit 4 2 4 2

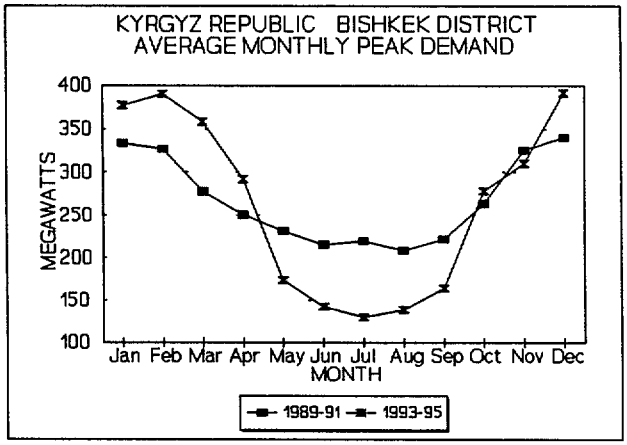

Exhibit 4 2 4 3 depicts average monthly peak demands for the Chu Electric Company for the years 1989 through 1991 and the period January 1993 through May 1995 This region too has experienced the gains in winter months seen in other regions During the summer months there has been less loss in load than was experienced in Bishkek Electric Network These patterns of change are for the same reasons discussed above As with the Bishkek Electric Network, the peak demand for the Chu Electric Company are not coincident with the peak demand for the Republic as a whole

Exhibit 4 2 4 3

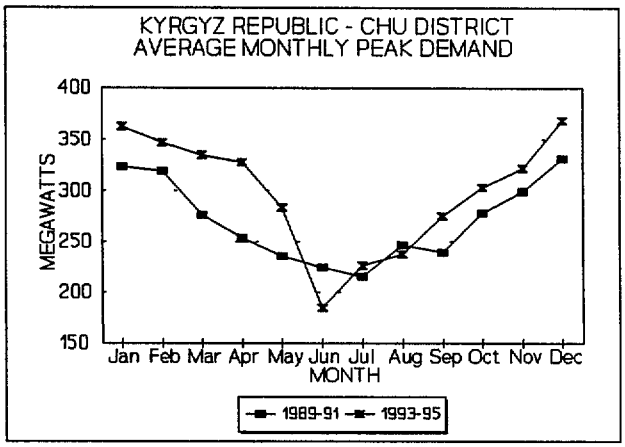

The recent trend of greatly increased winter demands, attributable to the problems of inadequate fuel supply, unreliability of district heating systems and increased use of electricity for heating and cooking is further demonstrated by examining the maximum demands experienced in January The month of January was selected simply to represent a typical winter month Similar trends can be established for the months of December, February and March

283

The Kyrgyz Republic's January peak demand for the years 1989 through 1995 are presented on Exhibit 4 2 4 4 In January 1995, the peak demand for the country as a whole was 2,280 MW Between 1991 and 1995, the January peak demand grew at an average annual rate of 7 7 percent, with this growth being largely due to increased residential usage, which more than offset diminished industrial usage

Exhibit 4 2 4 4

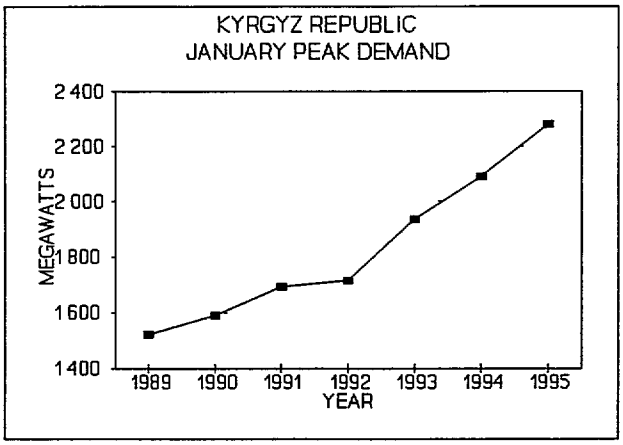

January peak demands for the Bishkek Electric Network for the years 1989 through 1995 are shown on Exhibit 4 2 4 5 In January 1995, the peak demand for the Bishkek Electric Network was 390 MW Between 1991 and 1995, January peak demands grew at an average annual rate of 3 7 percent This rate of growth is less than one-half of that experienced by the country as a whole and reflects the drag of decreased industrial consumption in this area Electric heating is rapidly replacing hot water heat in Bishkek and provided more than enough growth to offset the industrial losses

Exhibit 4 2 4 5

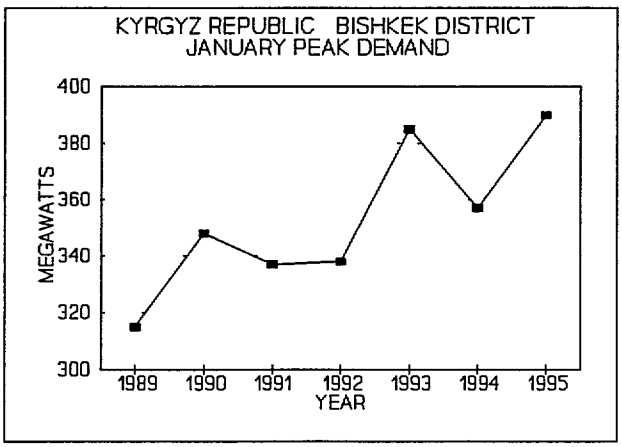

January peak demands for the Chu Electric Company for the years 1989 through 1995 are shown on Exhibit 4 2 4 6 The Chu Electric Company's peak demand in January 1995 was 377 MW

Between 1991 and 1995, January peak demand grew at an average annual rate of 4 8 percent, which is slower than the whole country, but faster than the Bishkek Electric Network As with the Bishkek Electric Network, this relatively slower rate of growth reflects the effects of diminished industrial production in the region

Exhibit 4 2 4 6

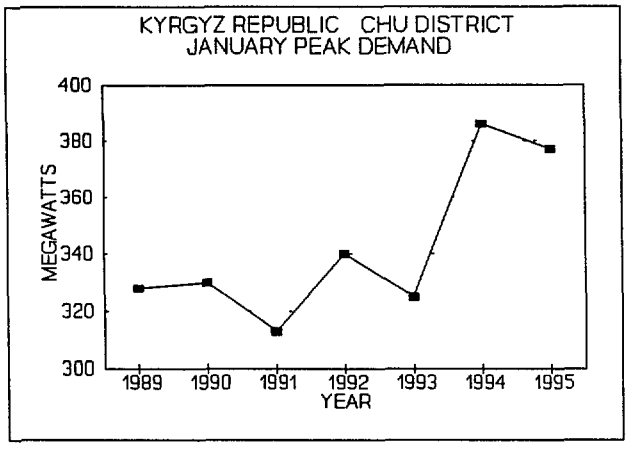

The decline in summer loads is more varied among the regional electric companies which is reflective of the degree of industrialization of those areas Rural areas prominently having a high concentration of agricultural and population loads have not experienced as large a drop in demand as Bishkek which had a large industrial base The following examines the trend in summer loads experienced in the Republic and the Bishkek and Chu Companies for the 1989-1995 period The summer month of August was selected simply to illustrate this experience A similar pattern can be discerned from a review of other summer months

Exhibit 4 2 4 7 depicts August peak demand for the Kyrgyz Republic for the years 1989 through 1994 In August 1994, the Republic's peak demand was 1,072 MW Between 1991 and 1994, the August peak demand decreased at an average annual rate of 4 3 percent, which reflects decreased industrial demand for electric service

Exhibit 4 2 4 7

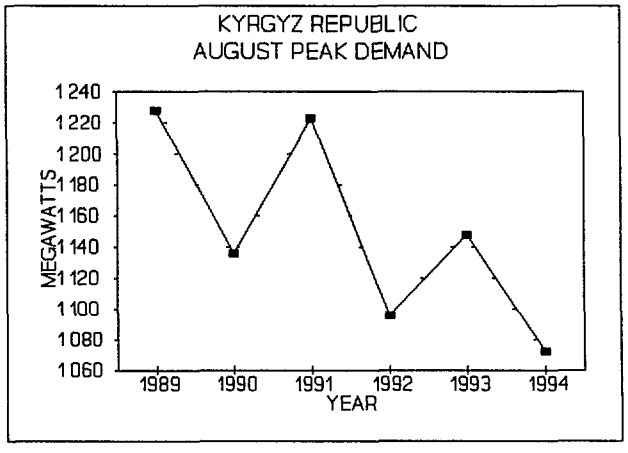

295

Exhibit 4 2 4 8 shows the August peak demands for the Bishkek Electric Network for the period 1989 through 1994 The peak demand for Bishkek Electric Network in August 1994 was 108 MW August peak demand decreased at an average annual rate of 16 7 percent, which, as mentioned above, reflects reductions in industrial production in the city

Exhibit 4 2 4 8

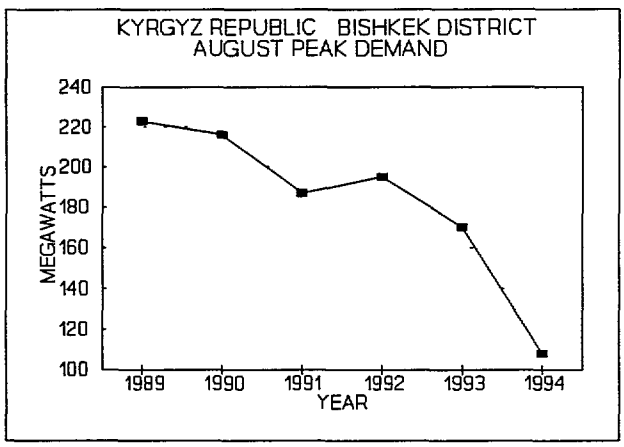

August peak demands for the Chu Electric Company for the years 1989 through 1994 are depicted on Exhibit 4 2 4 9 In August 1994, the Chu Electric Company's peak demand was 243 MW August peak demand decreased at a rate of 2 7 percent per year over the 1991 through 1994 period This rate of decline is much slower than for the Bishkek Electric Network and suggests that the Chu area has not been as adversely affected by industrial contractions

Exhibit 4 2 4 9

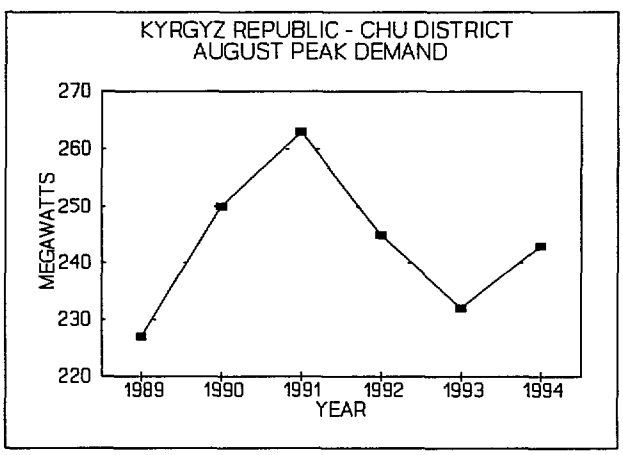

Appendix A provides, in tabular form, monthly peak demands for the Kyrgyz Republic, Northern and Southern regions, and all distribution companies for the period January 1989 through May 1995 Additionally, Appendix A contains graphs of the monthly peak demand for each region It should be noted the Northern and Southern regional demands are coincident with

the maximum demand in the Republic The individual company demands are non-coincident, therefore, the sum of the regional company demands may not add to the regional subtotals appearing in the tables

The pattern of change in monthly demands discussed above has important implications for expected future growth and for planning transmission and distribution facilities Based on the energy consumption forecast and patterns of growth experienced over recent years, it appears that winter peak demand is becoming more critical and that residential consumers will have a greater effect on the timing and magnitude of winter loads Therefore, facility planning studies will need to be directed towards areas with concentration of residential consumers, rather than where industry is located Facilities can be planned and developed as new manufacturing plants are constructed until the growth of the winter peak subsides It appears the overriding concern for system planners will be designing a system that can meet the rapidly increasing residential load

Winter Peak Demand Forecasts

The winter peak demand forecast for the Kyrgyz Republic is shown on Exhibit 4 2 4 10, with the peak demand for the winter season reflecting the maximum electric demand for the months of January and February of the current year and December of the preceding year Between the winter of 1988/89 and the winter of 1994/95, peak demand grew at an average annual rate of 6 5 percent, with this rate of growth reflecting the increased usage of electricity by the residential sector in the winter months in the republic The trend forecast projects that winter peak demand will grow at an average annual rate of 3 8 percent between the winters of 1994/95 and 2004/05, with the expansion of residential electricity usage growing at a slower pace The trend forecast reflects an analysis of the trend in growth of winter peak demand over the past seven winters and does not incorporate other factors that may influence peak demand growth, such as, weather extremes, economic growth, population changes, consumer choice changes, and government energy use policies An analysis for the winter season is presented because, as discussed above, this is the critical season for planners of transmission and distribution facilities

Exhibit 4 2 4 10

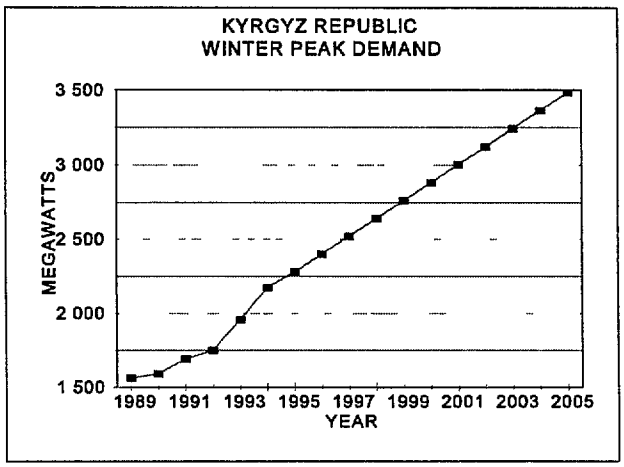

297

The winter peak demand forecast for the Bishkek area of the Kyrgyz Republic is presented on Exhibit 4 2 4 11 Between the winter of 1988/89 and the winter of 1994/95, peak demand grew at an average annual rate of 4 8 percent, which is slower than the rate experienced by the republic and reflects industrial production losses in this region The trend forecast projects that winter peak demand will grow at an average annual rate of 3 1 percent between the winters of 1994/95 and 2004/05

Exhibit 4 2 4 11

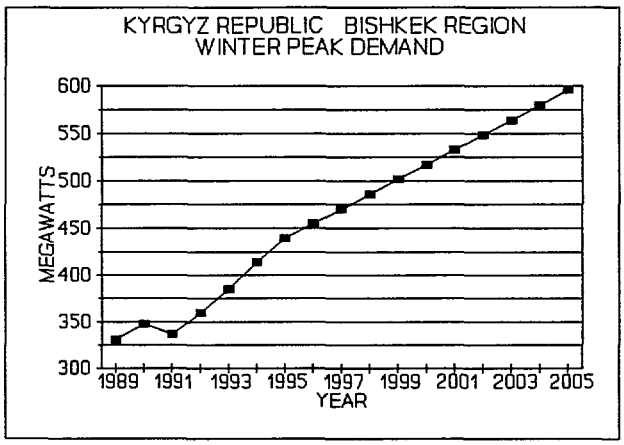

Depicted on Exhibit 4 2 4 12 is the winter peak demand forecast for the Chu area of the Kyrgyz Republic Winter peak demand grew at an average annual rate of 2 9 percent between the winters of 1988/89 and 1994/95 The trend forecast projects that between the winter of 1994/95 and the winter of 2004/05, winter peak demand will grow at an average annual rate of 3 1 percent, which reflects the more recent trends in the growth of winter peak demand in this region

Exhibit 4 2 4 12

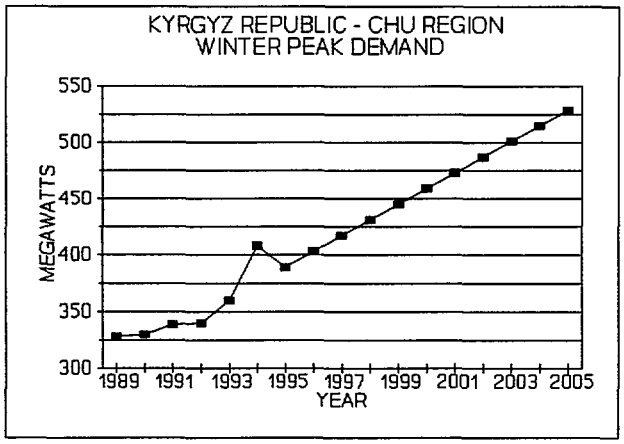

4 3 Description of Kyrgyzstan Power Supply System

The geography of Kyrgyzstan has resulted in the development of a bulk power supply system comprised of two parts The Northern Kyrgyzstan bulk power supply system provides electric service to the northern regions of Chu, Issyk-Kul, Naryn, Kemin, Talas (partial) and the capital city of Bishkek The Southern bulk energy system provides electric service to the Osh and Jalal Abad regions

As described more fully in the next section, the installed generating capacity in the Northern area totals approximately 667 MW, which is concentrated in the 558 MW (609 MW nameplate) Bishkek TES 1 thermal plant The fuel supply problems experienced at that plant have severely limited the operation and electrical output from the plant The increase in raw fuel prices, fuel transportation costs and the inability of the Kyrgyz National Energy Holding Company to recover such costs from consumers has greatly reduced the heat energy and electric energy production from this combined heat and power plant To illustrate this point, the electricity production at the Bishkek TES 1 plant has declined from a level of 3 96 TWH in 1990 to a level of 1 05 TWH in 1994 The maximum dependable capacity at the plant during periods of maximum demand is now on the order of 250 to 280 MW because of the temporary fuel shortages

The reduced availability of generation at the Bishkek TES 1 plant and the rapid increase in electric loads in the Northern region has resulted in an increased reliance of the Northern region on the transmission system The maximum demand in the Northern region was 1254 MW in winter 1992, 1393 MW in winter 1993, and 1471 MW in winter 1994 The growing imbalance between installed (and operable) generating capacity in the north and peak demands is placing great stress on the 500, 220 and 110 kV transmission system The following chart illustrates the growing imbalance between Northern demands and installed generating capacity

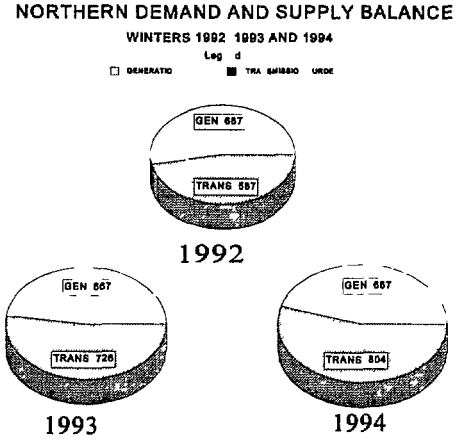

The transmission system provides the means to balance generation and demand in the north The 500 kV and 220 kV transmission system is relied upon to transfer power and energy from the hydroelectric plants remotely located in the southern part of the country

The significance of the Bishkek TES 1 plant in meeting the Northern region loads, based on 1994 winter demand, is illustrated in the following chart, assuming operation at full output of 558 MW and reduced output of approximately 280 MW

NORTHERN DEMAND AND SUPPLY BALANCE
EFFECT OF REDUCED BISHKEK PLANT OUTPUT

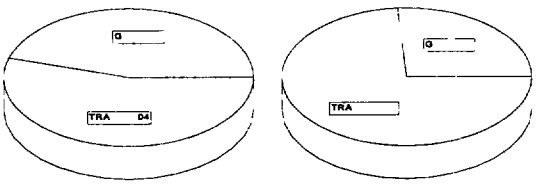

The foregoing chart clearly demonstrates the increased burden on the transmission system resulting from reduced operation of the Bishkek TES 1 plant As discussed in later sections, the recent trends in load growth and reduced operation of the Bishkek plant are unsustainable because of limitations in the capacity of the internal and regional transmission system Already many northern 220 kV, 110 kV and lower voltage transmission facilities are overloaded in the winter season The high loadings on the transmission system have increased both the active and reactive power transmission losses Very low voltages, seventy to eighty percent of nominal, have been experienced at 110 kV substations in many Northern areas The resolution of the fuel supply problems and rehabilitation of the TES-1 district heating systems will help relieve the problems on the T&D systems

The transmission system in the south of the Republic is not well integrated with the Northern region transmission system In fact, the main transmission systems of the Southern and Northern regions are only directly connected by the Toktogul-Frunzenskaia 500 kV line The two transmission systems are also indirectly interconnected by the 500 kV loop through neighboring countries

The situation in the Southern region of Kyrgyzstan, from a demand and supply balance perspective, is not as severe as the Northern region More than eighty percent (2,920 MW) of the Republic's generation is installed in the south The maximum load in the Southern region was 707 MW in winter 1992, 780 MW in winter 1993 and 854 MW in winter 1994 The rapidly increasing loads in the southern part of the country are, however, increasing the stress on the local 110 kV and lower voltage transmission facilities

The recent loading patterns experienced in Kyrgyzstan are greatly stressing the power supply system of the Republic The disruption of fuel supply, increased consumer demands, and other factors are seriously straining the ability of the existing power system to satisfy all of the demands This is due, in large part, because the power supply system in Kyrgyzstan was not originally planned to be operated in this fashion

The following sections describe, in more detail, the power supply facilities of the Kyrgyz Republic Consistent with the scope of this study, specific plans for reinforcing the transmission

systems of the Kalinin area of the Chu Electric Company and the City of Bishkek are presented Furthermore, the findings from the detailed simulation studies of the Kalinin and Bishkek transmission systems are used to estimate the needs in other areas of the Republic

4 3 1 Generation Facilities

The generation resources of Kyrgyzstan total some 3557 MW Hydroelectric power plants comprise 83% (2949 MW) of the total installed generating capacity and thermal power plants comprise 17% (608 MW) In 1993, the hydroelectric plants produced 8897 GWH or 81% of the total 10,987 GWH generated in the Kyrgyz Republic The thermal power plants produced the balance of 2090 GWH

The principal generation resources of the Kyrgyz Republic are summarized in the Table 4 3 1 1

Table 4 3 1 1

Kyrgyzstan Generation Resources
Total Republic and Region

Power Plants	Capacity (MW)	Percent of Total
Northern Kyrgyzstan		
Bishkek thermal electric	558	
Alamedin hydroelectric	30	
Atbashi hydroelectric	40	
Bystrovka hydroelectric	9	
Subtotal North	637	17 9
Southern Kyrgyzstan		
Osh thermal electric	50	
Toktogul hydroelectric	1200	
Kurpsai hydroelectric	800	
Uch-Kurgan hydroelectric	180	
Shamaldysai hydroelectric	240	
Tash Kumyr hydroelectric	450	
Subtotal South	2920	82 1
TOTAL REPUBLIC	3557	100 0

4 3 2 EHV and High Voltage Transmission System

The main source of power supply to the Northern area of Kyrgyzstan is the Frunzenskaia 500/220 kV substation, which is connected to the main hydroelectric complexes in the Southern

301

area by the 500 kV line from Toktogul The bulk power supply to the load centers in the North is provided by a network of 220 kV and 110 kV transmission lines The local loads are served at various locations through 110/35/6-10 kV substations and from a network of 35 kV transmission lines and 35/6-10 kV substations

The power supply system in Southern Kyrgyzstan is shaped by the territorial configuration of the Osh region The Osh region borders the Ferghana valley in the north, east and south The Kyrgyz 500, 220 and 110 kV transmission facilities in this area are tightly interconnected with facilities in Uzbekistan and the Southern Kyrgyzstan power system operations are strongly influenced by the operation of the Tadjikistan and Uzbekistan power systems The Kyrgyz energy system in this area is supplied by three 220/110/10 5 kV substations, namely Oktiabrskaia substation with two 125 MVA transformers, Uzlovaia substation with two 125 MVA transformers and the Alai substation with one 125 MVA transformer

The Uzlovaia substation is connected to the Latchin (formerly Leninskaia) substation in Uzbekistan by a double circuit 220 kV line and the Alai substation is connected to the Stepnaia substation in Uzbekistan also by a double circuit 220 kV transmission line The Latchin substation in Uzbekistan is a major facility in this region since it is part of the Central Asian 500 kV loop and the terminal for eight 220 kV transmission lines Two 501 MVA autotransformers, comprised of 167 MVA single-phase units, are installed at the Latchin substation

The abundant hydroelectric plants in Southern Kyrgyzstan provide the main source of power supply to that region The 1,200 MW (4-300 MW units) Toktogul hydro plant is connected to the transmission grid by two 500 kV overhead transmission lines One 500 kV transmission line from Toktogul is routed north to the Frunzenskaia substation in the Northern region of Kyrgyzstan and the other is routed south to the Latchin substation in Uzbekistan The 800 MW (4-200 MW units) Kurpsai hydro plant is connected to the local transmission grid at 220 and 110 kV The 180 MW (4-45 MW units) Uch Kurgan hydro plant is connected to the transmission grid at 110 kV The 240 MW Shamaldysai and the 450 MW Tash Kumyr hydro plants are located in close proximity to one another and connected to the 220 kV transmission grid

The bulk power supply to the compact load centers in the Osh area are provided by a network of 110 kV and 220 kV transmission lines The local load centers are served at various locations through 110/35/6-10 kV substations and from a network of 35 kV transmission lines and 35/6-10 kV substations

4 3.3 Interconnections with Neighboring Countries

The Kyrgyzstan electric power system operates as part of the integrated system of five Central Asian Republics Tadjikistan, Turkmenistan, Uzbekistan, Kyrgyzstan, and five regions of Southern Kazakhstan The power systems are interconnected through transmission lines operated at 500 kV and lower voltages The backbone of this system is a 500 kV ring consisting of Frunzenskaia-Toktogul-Latchin-Tashkent-Chimkent-Dzhambul-Frunzenskaia The Frunzenskaia and Toktogul substations are located in the Kyrgyz Republic The main dispatch center for the

306

Central Asian Power grid is located in Tashkent, Uzbekistan Other central control and dispatch centers are located in the Republics, including Kyrgyzstan which has its central control center located in Bishkek

The Kyrgyzstan 500 kV transmission system is connected in the north to the Kazakhstan system by 500 kV transmission lines from the Frunzenskaia substation to the Dzhambul and Alma-Ata substations The Kyrgyzstan 500 kV transmission system is connected in the south to the Uzbekistan system by a 500 kV interconnection from the Toktogul hydroelectric power plant to the Latchin substation in Uzbekistan

4.4 Transmission System Planning Study

Transmission planning studies for the power system in Kyrgyzstan were traditionally performed by the Energosetproekt Institute office in Tashkent, Uzbekistan The Kyrgyz National Energy Holding Company now maintains a network model, including impedance and other characteristic data, needed to perform simulation studies of the 220 and 500 kV transmission system in Kyrgyzstan The Control Service Department within the KNEHC uses this model to conduct power flow simulation studies to analyze the operation of the internal bulk transmission system and to provide for the interconnected operation within the Central Asian Grid System

The Kyrgyz National Energy Holding Company does not have a network model that would provide for the accurate assessment of the 110 kV and lower voltage transmission systems The power flow model used by the Control Service Department is not suitable for 110 kV and lower voltage planning studies since the model does not explicitly model 110 kV and lower voltage systems The transmission system is equivalized and loads are lumped and modelled at the 110 kV or 220 kV busses The characteristic data to develop a detailed network model, including full representation of the subtransmission system and lower voltage transformers is available at the KNEHC in reports and paper form, however, no electronic database exists

The use of mathematical models of the power system to perform planning and engineering studies is essential to develop least cost development plans For transmission system planning studies, the performance of the power system is simulated with such models through the use of computers The ability of the KNEHC to perform such studies is very limited because of the absence of computers, printers and modern simulation software It is reported that the KNEHC initiated an effort to assemble a database which would be required to perform accurate transmission planning studies of the 110 kV and lower voltage transmission systems This initiative was never completed The KNEHC can not perform simulation studies and analyses of the 110 kV and lower voltage transmission system independent of the Energosetproekt Institute

The Energosetproekt Institute used to perform such analyses for free prior to the dissolution of the Soviet Union Since the breakup, however, the Institute has transformed itself to a for-fee service organization Therefore, the KNEHC must now pay for detailed system planning studies conducted by the Institute Virtually all of the planning studies conducted prior to the independence of the Kyrgyz Republic are based on economic assumptions, load growth forecasts

and operating data that are not reflective of the significant changes that have occurred as already described in section 4 2

The need for the development of power flow models that would be suitable to perform analyses of the lower voltage transmission system was recognized early in the study The KNEHC team, under the direction of AEP Energy Services, Inc staff, assembled the raw data that was needed to accurately model the two areas that were the principal focus of this study, namely Bishkek Electric Network and the Kalinin area of the Chu Electric Company The organization of the model data was a significant undertaking since the load, transmission line, transformer, generating unit and other data had to be manually assembled Furthermore, the Kyrgyz and Russian power system software rely on physical units The AEP Energy Services, Inc team provided forms and instructions to convert the physical unit data into the per unit system which is suitable for use with the PSS/E simulation software

A power flow model of the Bishkek Electric Network system and the Kalinin area of the Chu Electric Company was developed using the PSS/E power system software program The power flow model was designed to explicitly represent the 110/lower voltage transformers and 35 kV transmission lines The loads were modelled at the 6 or 10 kV busses so that loading and voltages could be observed on the low side of the subtransmission transformers The initial calculations were validated by Kyrgyz planning and operations engineering staff The model developed for the Bishkek Electric Network and the Kalinin area of the Chu Electric Company provided the basis for the development of the transmission reinforcement plans The joint effort to undertake the model development also provided a training exercise and introduced and familiarized the Kyrgyz system planners with a modern power system simulation program used by many utilities

It is recommended that the KNEHC build on this experience by acquiring such software through internal funds or by grants so that a database for the entire National system can be developed This will then enable the KNEHC to perform detailed power system planning studies on a regional and national basis so that optimum plans that reflect the new realities can be developed The power system planning process is a continuous process and the KNEHC should strengthen its support of this function A detailed model of the internal power system would provide the tool to conduct the full range of transmission system planning studies There is an immediate need to conduct a reactive power optimization and voltage control study The Kyrgyz power system, and others of Russian design, have very few shunt capacitors Voltage regulation is provided through on-load tap changers and synchronous condensers A rigorous study of the Kyrgyz power system utilizing modern power system software will identify short term improvements that are very effective The Kyrgyz and Russian power system planners are, however, very resistant to the introduction of shunt capacitors, which is equipment routinely used in other power systems Continued interactions among Kyrgyz and American power engineers, coupled with continued information exchanges will overcome the resistance attributable to the lack of familiarity with the application of shunt capacitors

4 5 City of Bishkek Transmission and Distribution System

Transmission System

The increased loads in the Bishkek area and the fuel supply problems associated with the Bishkek TES 1 combined heat and power plant have caused the transmission and distribution systems of the Bishkek Electric Network to be heavily loaded for the past several winters Unless the inter-related problems of inadequate fuel supply and poor TES-1 plant and BDHE system performance is reversed the operating problems on the transmission and distribution systems are expected to not only continue but worsen in the foreseeable future

A transmission planning study was conducted to assess the situation in the City in order to develop plans for reinforcing the present transmission system Forecasts of the loads expected for a ten year planning horizon were developed A power flow model suitable for analyses of current and future conditions was also developed The model represented the transmission facilities in the City of Bishkek and the surrounding areas

The following sections provide an overview of the Bishkek Electric Network, including a discussion of the present operational problems and the plans developed to reinforce the system so as to improve the performance of the system to meet both present and projected increases in consumer loads

Distribution System

The City of Bishkek Distribution System is an electrical power system consisting of 6-10 kV underground cables as similarly found in other cities of Kyrgyzstan, such as Tokmak, Osh, Jalal-Abad and Karakol This system is designed to distribute electrical energy throughout the city, particularly to urban housing and industry As part of the Kyrgyz National Energy Holding Company, the City's present and future energy consumption patterns must be estimated in order to formulate needed improvements to keep this form of energy available in Bishkek and help alleviate heating energy demands in the future

4 5 1 Description of Existing Transmission and Distribution Facilities

Transmission System

The Bishkek Electric Network is divided into two operating units The Eastern unit consists of Octyabrysky and Swerdlowsky districts and the Western unit consists of Leninsky and Pervomainsky districts As shown on Figure D-1 (Appendix D), the main sources of power supply are the 588 MW Bishkek TES 1 combined heat and power plant and the Glavnaia 220/110/10 kV substation The Bishkek transmission grid consists of 119 km of 110 kV overhead transmission lines configured in a loop around the city center The 35 kV transmission lines total some 71 km

For transmission planning studies, the City can be divided into six areas as follows Northern Area, Central Area, Southern Area, Southwestern Area, Western Industrial Area, and Eastern

Industrial Area Table 4 5 1 1 lists the substations in these areas and provides a summary of their operating voltages and transformer capacities There are seventeen 110/35 kV substations with a total of twenty-eight 110/35 kV transformers, including four customer owned transformers, with a total installed capacity of 739 5 MVA In addition, there are four 110/6-10 kV substations, excluding the Bishkek TES 1 plant, with a total installed transformer capacity of 80 MVA Figure D-5 is a one-line diagram illustrating the substation configurations for the City's transmission system

Distribution System

The Distribution System consists of approximately 28 transmission/subtransmission stations, with 110/35/6-10 kV transformers ranging from 6 3 to 40 MVA These transformers connect to 6 or 10 kV busses which contain 5 to 10 circuit exits per transformer Each circuit is radial in design and limited in ampacity by conductor cross-sectional diameter Typical circuit ampacities range from 100 to 630 amperes, depending upon conductor size These circuits connect to step-down transformers rated from 60 kVA to 630 kVA and provide serving voltages of 230/380 volts, three-phase These voltages are connected to customers through overhead secondary lines or underground cables to apartments and buildings

4.5.2 Assessment of Physical Condition of Transmission and Distribution Facilities

Transmission System

An assessment of the physical condition of transmission facilities was performed to determine the operational capabilities of the Bishkek Electric Network Comprehensive survey forms were prepared to collect both general and site specific information for each of the substations Due to the limited success of the surveys in obtaining the essential data needed for assessing the System's condition, personal observations, site visits, and visual inspections were heavily relied upon to develop recommendations

The recommendations included in the assessment have been divided into three priority groups High priority items include those issues associated with personnel safety and system reliability Medium priority items include those issues associated with the efficient operation of the distribution system and reduction of losses Low priority items include long-range procedures for equipment replacement and new facilities The details of the assessment are provided in Appendix E of this report

Distribution System

The City of Bishkek Distribution System was established some 30 to 40 years ago and appears to be nearing the end of its useful life Inspections of sections of the existing cable system revealed a significant portion of the 6-10 kV lines and cables are in need of repair

Table 4 5 1 1

Bishkek Electric Network
Transmission Station Transformer Capacity

	Transformation					
Northern Area	Voltage	Capacity	Voltage	Capacity	Voltage	Capacity
Severnaia	35/6 kV	10	35/6 kV	6 3	35/10 kV	10
Hydro Station 1	35/6 kV	5 6				
Hydro Station 2	35/6 kV	3 0				
Hydro Station 3	35/6 kV	3 2				
Hydro Station 4	35/6 kV	3 2				
Hydro Station 5	35/6 kV	7 5				
Hydro Station 6	35/6 kV	7 5				
Selectro (Customer)	35/0 4 kV	4 0	35/10 kV	2 5		
Maiskaia	35/6 kV	6 3	35/6 kV	6 3		
Nur (Chu)	35/6 kV	6 3	35/6 kV	6 3		
OP	35/6 kV	4 0	35/6 kV	4 0		
Lermontova	110/35/10 kV	25				
Karagachevaia	110/35/6 kV	25	110/35/10 kV	25		
Molodogvardeiskaia			110/35/10 kV	16		
Teplichnaia	110/35/10 kV	25				
Central Area						
Penko-Dzhutovaia	35/6 kV	10	35/6 kV	10		
Centralnaia 1	35/10 kV	10	35/10 kV	10		
Centralnaia 2	35/6 kV	10	35/6 kV	16		
Centralnaia 4	35/6 kV	10	35/6 kV	10		
Centralnaia 6	35/6 kV	10	35/6 kV	10		
Lenin's Plant 1	110/35/6 kV	40	110/35/6 kV	40		
Lenin's Plant 2	35/6 kV	25	35/6 kV	25		
Yuzhnaia	110/35/6 kV	40	110/35/6 kV	40		
Southern Area						
Vodokanal	35/10 kV	6 3	35/10 kV	6 3		
Izdatelstvo	35/10 kV	6 3	35/10 kV	4 0		
GPP	35/6 kV	10				
Aini	110/10 kV	16	110/10 kV	16		
Novo-Vostochnaia	110/35/6 kV	25	110/35/6 kV	25		
Vostochnaia	110/35/6 kV	25	110/35/6 kV	25		

307

Table 4 5 1 1
(Continued)

Northern Area	Transformation					
	Voltage	Capacity	Voltage	Capacity	Voltage	Capacity
Southwestern Area						
Selekcionnaia	110/10 kV	16				
Peak Boiler	110/6 kV	16	110/6 kV	16		
Novo-Yuzhnaia	10/35/10 kV	25	110/35/10 kV	16	35/6 kV	10
Western Industrial Area						
MRZ	35/6 kV	10	35/6 kV	10		
Selmash 1	35/6 kV	10	35/6 kV	16		
Selmash 2	35/6 kV	16	35/6 kV	16		
Setun	35/6 kV	6 3	35/6 kV	6 3		
Zapadnaia	35/6 kV	10	35/6 kV	16	35/10 kV	10
Kyzyl-Asker	110/35/6 kV	20	110/35/6 kV	20		
Kostromskaia	110/35/10 kV	25				
Novo-Zapadnaia	110/35/6 kV	31 5	110/35/6 kV	31 5		
Eastern Industrial Area						
DSK	35/6 kV	6 3	35/6 kV	10		
Electrovakuumnaia	35/6 kV	10	35/6 kV	10		
Energostroi	35/6 kV	10	35/6 kV	6 3		
Avtomash	35/6 kV	16	35/6 kV	16		
Avtosborochnaia	35/6 kV	5 6				
Lebedinovka	35/10 kV	6 3	35/6 kV	4 0		
LGES	35/6 kV	5 6	35/6 kV	5 6		
Centralnaia 5	35/6 kV	10				
Alamedin	110/35/10 kV	25	110/35/10 kV	40		
Promyshlennaia	110/35/6 kV	40	110/35/6 kV	31 5		
Energeticheskaia	110/35/6 kV	25	110/35/6 kV	25		
Bishkek TES 1	110/35/6 kV	31 5	110/35/6 kV	31 5	110/10 kV	75
	110/10 kV	125	110/10 kV	125	110/10 kV	125
	220/110/10 kV	200	220/110/10 kV	200	220/10 kV	125
	110/10 kV	125				

Within the City of Bishkek, the underground cable system is operated at 6 or 10 kV The present cable system is a steel banded jacket type system originally designed for 10 kV operation Many cable sections are operated at 6 kV which explains the designation 6-10 kV The three conductor, three-phase cable system has been in service between 20 to 40 years depending on location within the City For the most part, 350 kcmil (177 mm^2) equivalent conductor is used which has been repeatedly spliced in order to maintain operations A week of inspecting cable splicing revealed that a number of circuits were left "out of service" because of difficulties in locating cable faults This leads to overloading other facilities until repairs can be accomplished Inspection of the transformer houses in which cables terminate also reveals a lack of spare parts for proper maintenance Periodic inspection, cleaning and repair is necessary to maintain proper operation Inspection of one cable repair location revealed this particular cable had been repaired (spliced) thirty (30) times from faults present upon the system With long relaying times and a uni-grounded system design, temporary overvoltages due to faults can cause cable failures Under actual operating conditions, circuits have remained "out of service" for long time periods because of the lack of proper splicing materials, difficulty in locating failures, lack of fault location equipment, and lack of transportation and communication equipment necessary for efficient crew performance

Use of new replacement 10 kV cable has not been implemented because of a lack of funding and also the lack of 10 kV cable availability It is reported that only one (1) kilometer of 10 kV cable has been available for repairs or replacement since 1985 Hence, repair of existing cable by splicing has been the major technique for restoring system operation With attention paid to proper training, new tool and equipment purchasing, with regards to cable repairs, the City could improve on the repair time needed to restore service Cable sections or segments with more than two failures within one year should be replaced with new 15 kV or 25 kV concentric-neutral type cable designs Within the USA, the economical replacement of a failed cable can usually be justified after two failures per cable section or segment

The City of Bishkek system is operated by personnel familiar with underground cable systems Failures of 6-10 kV cables occur almost daily The most pressing issue is improved maintenance methods and training to cope with this old cable system Current methods to repair cable faults indicate a need to update and modernize cable splicing techniques The material, tools, techniques, and equipment used by linemen reflect the need to be replaced with more modern apparatus and training in newer splicing techniques Typically, a cable failure may occur at a previous faulted location which was repaired some time earlier Splice failures upon failures tend to reoccur simply because the proper tools and equipment are not available to ensure a lasting repair

A second concern deals with the condition of transformer locations which provide step-down bus arrangements A concerted effort to clean and repair broken equipment could improve the operational aspects of the system Proper maintenance to existing facilities lacks support and could require increasing expenditures if continued to be neglected

4.5 3 Assessment of Operation of Transmission and Distribution Facilities -- Current Conditions

Bishkek Electric Network Historical Load Data

Table 4 5 3 1 shows the electric energy consumption by sector in the Bishkek Electric Network over the past five years Industry consumption over this time period has decreased at an average annual rate of 18 4%, or to approximately one-half of 1990 levels The energy usage of the commercial sector has also fallen during the past five years Agriculture usage has slightly increased since 1990, however the agriculture sector comprises a very small portion of Bishkek Electric Network energy consumption The largest gain over the past 5 years has been in the residential sector, at an average annual rate of 6 8% This increase in the residential sector indicates an increased level of electrification through the utilization of more electric appliances and, to some extent, electric resistance heating

Table 4 5 3 1

Bishkek Electric Network
Electric Energy Consumption
1990-1994

Sector	Energy Consumption (million kWh)					Average Annual Growth (%)
	1990	1991	1992	1993	1994	
Industry	926 5	861 5	692 5	595 3	471 4	-18 4
Agriculture	8 8	8 8	11 8	12 1	9 4	1 7
Commercial	203 9	208 6	219 8	213 6	176 5	-3 7
Residential	215 5	224 9	251 2	252 7	280 0	6 8
TOTAL	1354 7	1303 8	1175 3	1073 7	937 3	-9 6

The past three winter maximum loads of the Bishkek Electric Network are shown in Table 4 5 3 2 This table indicates the peak demand grew by 11% from the 1992/1993 to the 1994/1995 winter period, showing that even though energy usage was decreasing (Table 4 5 3 1) the peak demand was increasing This is caused by the increased utilization of electrical appliances and the growing usage of electric resistance heating by the residential sector Electric resistance heating has increased due to the poor performance of the Bishkek Thermal and Electric Station and District Heating system over the past few years

310

Table 4 5 3 2

Bishkek Electric Network
Winter Maximum Loads*

Winter Period	Seasonal Demand	
	Maximum	Date
1992/1993	405 MW	December 12, 1992
1993/1994	418 MW	December 10, 1993
1994/1995	449 MW	January 25, 1995

*Includes transmission and distribution losses

Table 4 5 3 3 illustrates the historical Bishkek Electric Network substation transformer loading during the winter periods from 1989 to 1994 Similar trends that were observed in Table 4 5 3 1 can also be noticed in Table 4 5 3 3 Historical loading of transformers which serve predominantly industrial load, such as the Energeticheskaia 110/35/6 kV substation, show a reduction from winter 1989 to 1994 of approximately 50% In contrast, the loading on the Kostromskaia 110/35/10 kV transformer, which serves residential load, has increased steadily since 1989

Bishkek Transmission Facilities

Currently there are two major sources of power supply to the City of Bishkek One of these sources is the Bishkek Thermal and Electric Station 1 (TES 1) plant where coal, mazut, or natural gas may be used to provide steam to the district heating system as well as electric power for the City of Bishkek The other main source of power supply is the Glavnaia 220/110/10 kV substation There are two 125 MVA transformers at the Glavnaia substation which provide power to the 110 kV ring around Bishkek There are 21 substations connected to the 110 kV ring, of which 17 substations are integrated into the 35 kV network, while 4 substations transform the voltage directly to the distribution level (6 or 10 kV) without connection at 35 kV

Because of the limited number of major supply points for the City of Bishkek, the Bishkek TES and Glavnaia substation are critical to system performance There are other transmission facilities that can negatively affect the Bishkek network, especially if out of service during winter peak conditions These facilities include the two Frunzenskaia 500/220 kV transformers, the Kara Balta-Glavnaia 220 kV transmission line, and the Frunzenskaia-Bystrovka 220 kV transmission line

311

Table 4 5 3 3

Bishkek Electric Network
Substation Transformer Loading
Winter 1989-1994
Page 1 of 6

Station Name	Voltage (kV)	Transformer Designation	Capacity (MVA)	Current Rating (Amps)	1989-1990 Measured Loading (Amps)	1989-1990 Loading/ Rating (%)	1990-1991 Measured Loading (Amps)	1990-1991 Loading/ Rating (%)	1991-1992 Measured Loading (Amps)	1991-1992 Loading/ Rating (%)
Yuzhnaia	110/35/6	T-1	40 0	201 1	85	42 3	130	64 6	45	22 4
		T-2	40 0	201 1	170	84 5	110	54 7	160	79 6
Novo-Yuzhnaia	110/35/10	T-1	25 0	125 5	8	6 4	40	31 9	65	51 8
		T-2	16 0	80 3	26	32 4	15	18 7	7	8 7
	35/6	T-3	10 0	157 0	65	41 4	110	70 1	140	89 2
Kyzyl-Asker	110/35/6	T-1	20 0	105 0	56	53 3	45	42 9	40	38 1
		T-2	20 0	105 0	30	28 6	25	23 8	25	23 8
Promyshlennaia	110/35/6	T-1	31 5	158 3	140	88 4	95	60 0	165	104 2
		T-2	31 5	158 3	115	72 7	145	91 6	110	69 5
Vostochnaia	110/35/6	T-1	25 0	125 6	70	55 7	75	59 7	70	55 7
		T-2	25 0	125 6	50	39 8	40	31 9	30	23 9
Novo-Vostochnaia	110/35/6	T-1	25 0	125 6	85	67 7	105	83 6	90	71 7
		T-2	25 0	125 6	105	83 6	120	95 5	115	91 6
Novo-Zapadnaia	110/35/6	T-1	31 5	165 6	125	75 5	135	81 5	110	66 4
		T-2	31 5	165 6	120	72 5	105	63 4	145	87 6
Karagachevaia	110/35/6	T-1	25 0	125 6	90	71 7	95	75 6	100	79 6
	110/35/10	T-2	25 0	125 6	70	55 7	75	59 7	65	51 8
Alamedin	110/35/10	T-1	25 0	125 6	12	9 6	90	71 7	125	99 5
		T-2	40 0	201 3	140	69 6	80	39 7	65	32 3
Energeticheskaia	110/35/6	T-1	25 0	132 6	60	45 3	65	49 0	55	41 5
		T-2	25 0	125 6	0	0 0	0	0 0	0	0 0

Bishkek Electric Network
Substation Transformer Loading
Winter 1989-1994

Station Name	Voltage (kV)	Transformer Designation	Capacity (MVA)	Current Rating (Amps)	1989-1990 Measured Loading (Amps)	1989-1990 Loading/ Rating (%)	1990-1991 Measured Loading (Amps)	1990-1991 Loading/ Rating (%)	1991-1992 Measured Loading (Amps)	1991-1992 Loading/ Rating (%)
Kostromskaia	110/35/10	T-2	25 0	125 6	5	4 0	10	8 0	15	11 9
Molodogvardeiskaia	110/35/10	T-2	16 0	80 3	31	38 6	38	47 3	40	49 8
Aini	110/10	T-1	16 0	80 3	5	6 2	6	7 5	8	10 0
		T-2	16 0	80 3	0	0 0	0	0 0	0	0 0
Pikovaia Kotelnaia	110/6	T-1	16 0	80 3	0	0 0	5	6 2	5	6 2
		T-2	16 0	80 3	0	0 0	5	6 2	0	0 0
Vodokanal	35/10	T-1	6 3	100 0	10	10 0	35	35 0	40	40 0
		T-2	6 3	66 0	33	50 0	63	95 5	65	98 5
DSK	35/6	T-1	6 3	103 9	44	42 4	52	50 1	70	67 4
		T-2	10 0	157 0	61	38 9	35	22 3	35	22 3
Izdatelstvo	35/10	T-1	6 3	101 5	15	14 8	0	0 0	2	2 0
		T-2	4 0	101 5	5	4 9	3	3 0	0	0 0
MRZ	35/6	T-1	10 0	165 0	96	58 2	115	69 7	80	48 5
		T-2	10 0	165 0	109	66 1	60	36 4	85	51 5
Penko-Dzhutovaia	35/6	T-1	10 0	157 0	77	49 0	60	38 2	70	44 6
		T-2	10 0	157 3	84	53 4	90	57 2	100	63 6
Zapadnaia	35/6	T-1	10 0	165 0	96 2	58 3	96	58 2	70	42 4
		T 2	16 0	251 0	43 7	17 4	50	19 9	133	53 0
		T-3	7 3	123 7	47	38 0	70	56 6	0	0 0
	35/10	T-4	10 0	157 0	10	6 4	5	3 2	15	9 6

Bishkek Electric Network
Substation Transformer Loading
Winter 1989-1994

Station Name	Voltage (kV)	Transformer Designation	Capacity (MVA)	Current Rating (Amps)	1989-1990 Measured Loading (Amps)	1989-1990 Loading/ Rating (%)	1990-1991 Measured Loading (Amps)	1990-1991 Loading/ Rating (%)	1991-1992 Measured Loading (Amps)	1991-1992 Loading/ Rating (%)
Severnaia	35/6	T-1	10 0	165 1	122	73 9	130	78 7	146	88 4
		T-2	10 0	157 0	0	0 0	146	93 0	0	0 0
Electrovakuumnaia	35/6	T-1	10 0	157 0	81	51 6	105	66 9	75	47 8
		T-2	10 0	157 0	123	78 3	95	60 5	100	63 7
Energostroi	35/6	T-1	10 0	157 0	42	26 8	30	19 1	55	35 0
Centralnaia I	35/6	T-1	10 0	157 3	114	72 5	130	82 6	115	73 1
		T-2	10 0	157 3	0	0 0	0	0 0	0	0 0
Centralnaia II	35/6	T-1	10 0	157 3	122 5	77 9	100	63 6	127	80 7
	35/10	T-2	16 0	251 0	9	3 6	25	10 0	35	13 9
Centralnaia IV	35/6	T-1	10 0	157 0	122	77 7	140	89 2	115	73 3
		T-2	10 0	157 0	62	39 5	50	31 9	115	73 3
Centralnaia VI	35/6	T-1	10 0	157 0	144	91 7	115	73 3	125	79 6
		T-2	10 0	157 0	61	38 9	70	44 6	65	41 4
LGS	35/6	T-1	5 6	84 0	26	31 0	25	29 8	15	17 9
		T-2	5 6	84 0	23	27 4	25	29 8	13	15 5
Hydroelectric 1	35/6	T-1	5 6	92 4	53	57 4	89	96 3	59	63 9
Hydroelectric 2	35/6	T 1	3 0	45 0	22	48 9	33	73 3	36	80 0
Hydroelectric 3	35/6	T 1	3 2	48 0	34 5	71 9	42	87 5	21	43 8
Hydroelectric 4	35/6	T-1	3 2	48 0	35	72 9	46	95 8	47	97 9
Hydroelectric 5	35/6	T-1	7 5	123 0	32	26 0	30	24 4	23	18 7
Hydroelectric 6	35/6	T-1	7 5	123 0	21	17 1	35	28 5	36	29 3

Bishkek Electric Network
Substation Transformer Loading
Winter 1989-1994

Station Name	Voltage (kV)	Transformer Designation	Capacity (MVA)	Current Rating (Amps)	1992-1993 Measured Loading (Amps)	1992-1993 Loading/ Rating (%)	1993-1994 Measured Loading (Amps)	1993-1994 Loading/ Rating (%)	1994-1995 Measured Loading (Amps)	1994-1995 Loading/ Rating (%)
Yuzhnaia	110/35/6	T-1	40 0	201 1	40	19 9	46	22 9	45	22 4
		T-2	40 0	201 1	175	87 0	113	56 2	189	94 0
Novo-Yuzhnaia	110/35/10	T-1	25 0	125 5	35	27 9	50	39 8	67	53 4
		T-2	16 0	80 3	9	11 2	11	13 7	12	14 9
	35/6	T-3	10 0	157 0	135	86 0	102	65 0	108	68 8
Kyzyl-Asker	110/35/6	T-1	20 0	105 0	40	38 1	36	34 3	38	36 2
		T-2	20 0	105 0	20	19 1	15	14 3	11	10 5
Promyshlennaia	110/35/6	T-1	31 5	158 3	138	87 2	144	91 0	128	80 9
		T-2	31 5	158 3	90	56 9	45	28 4	51	32 2
Vostochnaia	110/35/6	T-1	25 0	125 6	80	63 7	68	54 1	60	47 8
		T-2	25 0	125 6	40	31 9	25	19 9	32	25 5
Novo-Vostochnaia	110/35/6	T-1	25 0	125 6	96	76 4	52	41 4	78	62 1
		T-2	25 0	125 6	118	94 0	90	71 7	107	85 2
Novo-Zapadnaia	110/35/6	T-1	31 5	165 6	130	78 5	56	33 8	56	33 8
		T-2	31 5	165 6	145	87 6	118	71 3	78	47 1
Karagachevaia	110/35/6	T-1	25 0	125 6	70	55 7	62	49 4	61	48 6
	110/35/10	T-2	25 0	125 6	90	71 7	98	78 0	99	78 8
Alamedin	110/35/10	T-1	25 0	125 6	120	95 5	98	78 0	111	88 4
		T-2	40 0	201 3	54	26 8	47	23 4	75	37 3
Energeticheskaia	110/35/6	T-1	25 0	132 6	30	22 6	23	17 4	27	20 4
		T-2	25 0	125 6	0	0 0	2	1 6	1	0 8

Bishkek Electric Network
Substation Transformer Loading
Winter 1989-1994

Station Name	Voltage (kV)	Transformer Designation	Capacity (MVA)	Current Rating (Amps)	1992-1993 Measured Loading (Amps)	1992-1993 Loading/ Rating (%)	1993-1994 Measured Loading (Amps)	1993-1994 Loading/ Rating (%)	1994-1995 Measured Loading (Amps)	1994-1995 Loading/ Rating (%)
Kostromskaia	110/35/10	T-2	25 0	125 6	40	31 9	85	67 7	70	55 7
Molodogvardeiskaia	110/35/10	T-2	16 0	80 3	50	62 3	59	73 5	70	87 2
Aini	110/10	T-1	16 0	80 3	10	12 5	5	6 2	13	16 2
		T-2	16 0	80 3	0	0 0	1	1 3	7	8 7
Pikovaia Kotelnaia	110/6	T-1	16 0	80 3	6	7 5	2	2 5	0	0 0
		T-2	16 0	80 3	0	0 0	3	3 7	2	2 5
Vodokanal	35/10	T-1	6 3	100 0	32	32 0	39	39 0	41	41 0
		T-2	6 3	66 0	50	75 8	33	50 0	24	36 4
DSK	35/6	T-1	6 3	103 9	64	61 6	9	8 7	39	37 5
		T-2	10 0	157 0	25	15 9	44	28 0	23	14 7
Izdatelstvo	35/10	T-1	6 3	101 5	3	3 0	3	3 0	1	1 0
		T-2	4 0	101 5	3	3 0	2	2 0	1	1 0
MRZ	35/6	T-1	10 0	165 0	40	24 2	52	31 5	23	13 9
		T-2	10 0	165 0	85	51 5	79	47 9	44	26 7
Penko-Dzhutovaia	35/6	T-1	10 0	157 0	72	45 9	58	36 9	61	38 9
		T-2	10 0	157 3	85	54 0	80	50 9	61	38 8
Zapadnaia	35/6	T-1	10 0	165 0	90	54 6	79	47 9	122	73 9
		1 2	16 0	251 0	86	34 3	96	38 3	82	32 7
		T-3	7 3	123 7	0	0 0	0	0 0	0	0 0
	35/10	T-4	10 0	157 0	15	9 6	10	6 4	67	42 7

Bishkek Electric Network
Substation Transformer Loading
Winter 1989-1994

Station Name	Voltage (kV)	Transformer Designation	Capacity (MVA)	Current Rating (Amps)	1992-1993 Measured Loading (Amps)	1992-1993 Loading/ Rating (%)	1993-1994 Measured Loading (Amps)	1993-1994 Loading/ Rating (%)	1994-1995 Measured Loading (Amps)	1994-1995 Loading/ Rating (%)
Severnaia	35/6	T-1	10 0	165 1	120	72 7	87	52 7	52	31 5
		T-2	10 0	157 0	0	0 0	44	28 0	70	44 6
Electrovakuumnaia	35/6	T-1	10 0	157 0	72	45 9	91	58 0	73	46 5
		T-2	10 0	157 0	100	63 7	70	44 6	75	47 8
Energostroi	35/6	T-1	10 0	157 0	24	15 3	60	38 2	11	7 0
Centralnaia I	35/6	T-1	10 0	157 3	140	89 0	140	89 0	152	96 6
		T-2	10 0	157 3	0	0 0	0	0 0	18	11 4
Centralnaia II	35/6	T-1	10 0	157 3	100	63 6	114	72 5	140	89 0
	35/10	T-2	16 0	251 0	20	8 0	52	20 7	52	20 7
Centralnaia IV	35/6	T-1	10 0	157 0	100	63 7	57	36 3	79	50 3
		T-2	10 0	157 0	80	51 0	70	44 6	140	89 2
Centralnaia VI	35/6	T-1	10 0	157 0	108	68 8	140	89 2	136	86 6
		T-2	10 0	157 0	78	49 7	70	44 6	70	44 6
LGS	35/6	T-1	5 6	84 0	27	32 1	26	31 0	25	29 8
		T-2	5 6	84 0	23	27 4	24	28 6	23	27 4
Hydroelectric 1	35/6	T-1	5 6	92 4	74	80 1	84	90 9	9	9 7
Hydroelectric 2	35/6	T-1	3 0	45 0	36	80 0	19	42 2	9	20 0
Hydroelectric 3	35/6	T 1	3 2	48 0	32	66 7	34	70 8	40	83 3
Hydroelectric 4	35/6	T-1	3 2	48 0	45	93 8	52	108 3	46	95 8
Hydroelectric 5	35/6	T-1	7 5	123 0	34	27 6	26	21 1	21	17 1
Hydroelectric 6	35/6	T-1	7 5	123 0	30	24 4	18	14 6	14	11 4

Bishkek Distribution Facilities

The City of Bishkek has underground distribution cables operating at 6 or 10 kV For existing circuits, the apparent design loadings based upon cable ampacity are

100A =	1 0 MVA @ 6 kV	1 7 MVA @ 10 kV
200A =	2 0 MVA	3 4 MVA
300A =	3 0 MVA	5 2 MVA
400A =	4 0 MVA	6 9 MVA
630A =	6 5 MVA	10 MVA

Review of the existing loading on the distribution circuits indicates that overloading of facilities, under normal conditions, is unlikely A listing of the loadings, by feeder and by substation, for the winter 1993/94 and summer 1994, is presented in Appendix F

4 5 4 Assessment of Operation of Transmission and Distribution Facilities -- Future Conditions

Bishkek Area Load Forecast

The forecast of the loads for the City of Bishkek was predicated on two assumptions regarding the future evolution of the Bishkek area electric demands One forecast reflects the assumption that residential use of electricity for heating will increase rapidly as fuel shortages and other difficulties limit the availability and production of steam at the Bishkek TES for use in the district heating system The other load forecast reflects good performance at the Bishkek TES, thereby providing enough energy to the district heating system and less substitution of electric heat by residential customers

Table 4 5 4 1 provides a summary of the load forecast for three planning horizons Winter 1997/1998, 2000/2001 and 2005/2006 The detailed disaggregation of these forecasts is provided in Appendix B The disaggregated loads, i e , loads expected at individual substations, were modeled in the power flow base cases developed for the different planning periods As described later, the high growth forecast is clearly unsustainable since transmission facilities could not be planned, constructed, or financed to meet such a rapid expansion The forecast reflecting a return to more normal operating conditions, i e , resolution of fuel supply limitations, rehabilitation and improvement of Bishkek TES-1 and the district heating system formed the basis for the transmission and distribution expansion plan

Table 4 5 4 1

City of Bishkek
Winter Peak Load Forecast*

Winter Period	Load Forecast (MW)		
	Expected	Maximum	Difference
1997/1998	469	658	189
2000/2001	549	889	340
2005/2006	613	1135	522

*Excludes transmission losses

Average Annual Growth
Expected Load Growth3 4%
Maximum Load Growth7 1%

Transmission System Performance -- 1997 Expected Peak Load Conditions

By 1997 the expected winter peak load for the City of Bishkek is forecast to be 469 MW, excluding transmission losses estimated at 43 MW Power flow analyses for this load level indicate that a number of facilities will be overloaded under base conditions, i e , all facilities in service The fact that simulation studies of expected 1997 winter conditions reveal transmission facilities are overloaded with all facilities in-service is consistent with recent operating experience and is to be expected when loads are increasing Normally transmission systems, by design, are loaded to levels which provide operating margins to accommodate contingencies, i e , the outage of one or more transmission lines, changes in generation dispatch, loss of a transformer and so forth The western operating practice is to provide for margin to accommodate the outage of the single most critical facility, the so-called n-1 contingency operating practice Because little margin or flexibility of operation exists in the Bishkek system, the outage of transmission facilities in the city, especially the Glavnaia transformer or sections of the 110 kV transmission loop, will result in more severely depressed voltages and greater overloads than already observed in actual operations and the simulation studies

Table 4 5 4 2 shows the facilities that are expected to be overloaded and the amount by which they are overloaded

314

Table 4 5 4 2

Bishkek Area Overloaded Facilities
1997 Winter Expected Peak Conditions

Facility	Actual Loading (MVA)	Admissible Loading (MVA)	Percent of Admissible (%)
Teplichnaia 110/35/10 kV Transformer	23 2	16 0	145
Novo-Vostochnaia 110/35/6 kV Transformer #1	27 8	25 0	111
Novo-Vostochnaia 110/35/6 kV Transformer #2	39 6	25 0	158
Selectro 35/0 4 kV Transformer	4 3	4 0	108
Selectro 35/10 kV Transformer	4 6	4 0	115
Selekccionnaia 110/10 kV Transformer	18 9	16 0	118
Karagachevaia 110/35/10 kV Transformer #2	30 5	25 0	122
Hydro Station 1 35/6 kV Transformer	9 6	5 6	171
Hydro Station 4 35/6 kV Transformer	4 4	3 2	138
Hydro Station 3-Hydro Station 2 35 kV	11 4	9 1	125
Hydro Station 2-Hydro Station 1 35 kV	9 6	9 1	105
Novo-Zapadnaia 110/35/6 kV Transformer #1	33 1	31 5	105
DSK 35/6 kV Transformer #1	7 4	6 3	117

Table 4 5 4 2 shows that eleven transformers will be overloaded under this scenario, up to as much as 170% of their admissible (nameplate) rating Five of the eleven overloaded transformers are of the 110 kV/35 kV/distribution (6 or 10 kV) variety This variety of transformer serves two purposes in the Kyrgyz electric power system The first purpose is to provide power sources for the 35 kV network from the 110 kV network The second purpose is to provide a source to the distribution system emanating from the substation without having separate 35 kV/distribution transformers The overloads on these five transformers are caused by a combination of having to provide power to both the subtransmission (35 kV) and distribution (6 or 10 kV) systems The other six overloaded transformers are of the 35 kV/

320

distribution variety The overloads on these six transformers are strictly caused by power requirements of the distribution system

In order to relieve the overloaded Teplichnaia 110/35/10 kV transformer, a second 110/35/10 kV transformer should be installed at the substation The Novo-Vostochnaia 110/35/6 kV transformer overloads can be alleviated by adding a second 110/35/10 kV transformer at the Orto-Alysh substation and to tap the Orto-Alysh 35 kV station into the Vodokanal-Dzhal line The Selectro 35/0 4 kV transformer is scheduled for retirement and replacement with a 35/10 kV transformer to relieve the Selectro transformer overloads The addition of a second 110/10 kV transformer at Selekccionnaia will relieve the transformer overload at that substation To relieve the overloads on the Karagachevaia 110/35/10 kV transformer and the Hydro Station 1 and 4 transformers, it is recommended to construct a new 110/35/6 kV substation near Hydro Station 3, and to replace the Hydro Station 1 and 4 35/6 kV transformers as they are approximately 60 years old

In addition to the overloaded transformers, one 35 kV circuit (two segments) -- Hydro Station 1 - Hydro Station 2 - Hydro Station 3 -- is also overloaded This circuit can be reconductored using a larger wire size to alleviate the overload Two other overloads, the Novo-Zapadnaia 110/35/6 kV transformer and DSK 35/6 kV transformer, can be relieved by balancing the distribution load better at the substation

Other overloads were discovered in the early stages of analyses, but were found to be caused by reactive power requirements (MVAr), as opposed to active power requirements (MW) The overloads that were due to reactive power requirements can be alleviated by the addition of reactive power supplies, specifically capacitors, to the power system The need for reactive power support was found to exist at the Bystrovka, Glavnaia, Karagachevaia, Kyzyl-Asker, Molodogvardeiskaia, and Orto-Alysh substations The overloads caused by reactive power requirements were excluded from Table 4 5 4 2 Section 4 6 1 will describe in detail the recommendations needed to relieve the overloaded facilities

It is also expected that up to four new substations will be needed to supply new load areas by this time period These substations include Centralnaia III 35/6 kV, Kok-Dzar 110/35/10 kV, Kyrgyzskaia 110/10 kV, and Orok 110/35/10 kV

Transmission System Performance -- 2000 Expected Peak Load Conditions

For the 2000/2001 Winter peak period, the expected peak load is 549 MW, excluding transmission losses estimated at 55 MW Under this load forecast scenario, only three facilities were found to be overloaded as shown in Table 4 5 4 3 This analysis assumes the overloads identified for 1997 conditions are alleviated according to recommendations for the 1997 time period Only new overloads that result from the increase in load between 1997 and 2000 are shown in Table 4 5 4 3

321

Table 4 5 4 3

Bishkek Area Overloaded Facilities
2000 Winter Expected Peak Conditions

Facility	Actual Loading (MVA)	Admissible Loading (MVA)	Percent of Admissible (%)
Novo-Zapadnaia 110/35/6 kV Transformer #1	42 1	31 5	134
Kyzyl-Asker 110/35/6 kV Transformer #1	30 5	20 0	153
Molodogvardeiskaia 110/35/10 kV Transformer	29 4	16 0	184

The three overloaded facilities under this scenario are all 110/35/distribution kV transformers As described in the 1997 performance section, the overloads on these transformers are due to the combination of providing power to both the subtransmission and distribution systems The overloaded Novo-Zapadnaia 110/35/6 kV transformer can be alleviated by adding a second 110/35/10 kV transformer at Kostromskaia The second transformer at Kostromskaia will supply some of the load area currently served by the Novo-Zapadnaia transformer, alleviating the overload on this transformer The Kyzyl-Asker 110/35/6 kV transformer can be replaced by a 40 MVA transformer to relieve the overload Improving the power factor at nearby industrial sites will also help to reduce the loading on the Kyzyl-Asker transformer At Molodogvardeiskaia, a second 110/35/10 kV transformer is needed to help supply load in the area

By the 2000 time period, additional substations that could be needed to serve new load areas include ABZ 110/10 kV, Asanbai 35/6 kV, Chui 110/10 kV, Gagarina 110/10 kV, Manas-Ata 110/35/10 kV, Parkovaia 110/35/10 kV, Rassvet 110/35/10 kV, and Saadaeva 35/10 kV

Transmission System Performance -- 2005 Expected Peak Load Conditions

The expected peak load during the 2005/2006 is forecast to be 613 MW The list of overloaded facilities for this scenario can be found in Table 4 5 4 4 This analysis assumes the overloads identified for 2000 conditions are alleviated according to recommendations for the 2000 time period Only new overloads that result from the increase in load between 2000 and 2005 are shown in Table 4 5 4 4

322

Table 4 5 4 4

Bishkek Area Overloaded Facilities
2005 Winter Expected Peak Conditions

Facility	Actual Loading (MVA)	Admissible Loading (MVA)	Percent of Admissible (%)
Frunzenskaia-Ala Archa 220 kV	313 1	270 0	116
Zapadnaia 35/6 kV Transformer #1	17 8	10 0	178
Bishkek TES - Penko-Dzhutovaia 35 kV	39 7	21 5	185
Penko-Dzhutovaia - Centralnaia VI 35 kV	26 0	14 5	179
Centralnaia VI 35/6 kV Transformer #1	10 8	10 0	108
Centralnaia VI 35/6 kV Transformer #2	11 3	10 0	113
LGS-Nur 35 kV	21 7	18 2	119

From the above table, it can be seen that the Frunzenskaia-Ala Archa 220 kV line is overloaded to 116% of its admissible rating This is of great concern as the Frunzenskaia - Ala Archa circuit is one of the main supply lines to Bishkek and Northern Kyrgyzstan The overload of this 220 kV circuit indicates that an additional EHV source is needed in Northern Kyrgyzstan One option proposed by the Kyrgyz is the construction of the Frunzenskaia-Kemin 500 kV circuit to alleviate the overload and also support the Northeastern portion of the Republic There are concerns, however, about how this new line would affect the stability limits of the Central Asian 500 kV ring and the ability to fully utilize the investment required for this option

The introduction of a new source of supply to the Northern region is a major project Original plans, conceived in conjunction with the Kambarata hydroelectric project, envisioned the development of 500 kV transmission lines from the existing Frunzenskaia substation to Kemin substation (located at the western edge of Lake Issyk Kul in close proximity to the Bystrovka substation), and a 500 kV line from the Kambarata plant also to Kemin substation This 500 kV transmission reinforcement program would provide a 500 kV loop within Kyrgyzstan The scope, cost, timing and optimum configuration of this 500 kV development plan must be re-evaluated in view of the timing of development of the Kambarata plant and the present operation of the power system in Kyrgyzstan and neighboring Republics Planning studies indicate only approximately 250 MW is available from the Central Asian Ring to support a Frunzenskaia-Kemin 500 kV line without development of the Kambarata plant Detailed power flow and power system stability studies, utilizing appropriate models of the Kyrgyz and neighboring

Republic's power systems, would need to be conducted to evaluate the performance of alternatives to reinforce the bulk power supply to the Northern region of Kyrgyzstan Such studies are beyond the scope of this study

The Zapadnaia 35/6 kV transformer overload can be relieved by adding additional transformer capacity at the substation The Centralnaia VI 35/6 kV transformers and 35 kV line sections connecting the Bishkek TES, Penko-Dzhutovaia, and Centralnaia VI also appear as overloaded in the simulation studies, as much as 185% overloaded This indicates that an additional 110/35 kV supply point is needed to reduce the burden of carrying large amounts of power over long distances on the 35 kV network The Penko-Dzhutovaia 110/35/10 kV substation would relieve these overloads Lastly, the LGS-Nur 35 kV overload could be corrected by reconductoring the circuit using a larger wire size to increase capacity

Four additional substations are expected to be needed by 2005 to serve new load areas These substations include Electrodvigatel 35/10 kV, Konditerskaia 110/10 kV, Tunguch 35/10 kV, and Uchkun 110/35/10 kV

Transmission System Performance – 1997, 2000, and 2005 Maximum Peak Load Conditions

Under the maximum peak load conditions, the forecasted load for the City of Bishkek is 658, 889, and 1135 MW for the 1997, 2000, and 2005 winter periods, respectively The maximum peak load forecast assumes widespread electric resistance heating conditions in conjunction with poor performance by the Bishkek TES The maximum peak load for the 1997 winter period is approximately that of the expected peak load for the 2005 winter period Therefore, overloads seen for the 1997, 2000, and 2005 expected peak load conditions would all occur by the 1997 time period using the maximum peak load scenario All system reinforcements needed through 2005 would have to be advanced to be in service by 1997 By the year 2000 with maximum peak load conditions, additional bulk power sources to the City of Bishkek would be needed to handle the increased load Power flow models for the year 2000 indicated the potential for power system instability at this load level due to the lack of adequate power supply in the Bishkek area By 2005, a well-supported 500 kV source would be needed in the Bishkek area to support the maximum peak load forecast Such a source could only be provided if other major reinforcements to the Northern region were also provided as already noted previously

There is simply not enough time to plan and construct enough power system facilities to be capable of supporting the maximum peak load forecasts The recommendations are to operate the Bishkek TES as productively as possible during the winter to provide enough energy to the district heating system, and also to discourage the use of electric resistance heating by residents as the power system will be unable to handle loads increasing at such a rapid rate

Distribution System Performance

Inspection of forecasted normal loading appears to indicate that overloading of facilities as shown on "City of Bishkek Area" Table 4 5 4 5 will not occur through the year 2005 Hence, existing facilities have ample capacity to handle the normal loading forecasted through 2005 However,

Table 4 5 4 5

City of Bishkek Area
Estimated Distribution Circuit
Loading for Future Load Forecasts

Station	Size # MVA	Estimated Loading (MVA) 1997 Max	1997 Nor	2000 Max	2000 Nor	2005 Max	2005 Nor	Number Circuits 6 and 10 kV	Estimated Circuit Loading (MVA) 1997 Max	1997 Nor	2000 Max	2000 Nor	2005 Max	2005 Nor
Novo-Yuzhnaia	1-25	24 0	14 0	27 0	15 0	31 5	16 5	18-10 kV	0 4	0 3	0 5	0 3	0 6	0 3
	1-16							8-6 kV	1 0	0 6	1 1	0 6	1 3	0 7
	1-10													
Karagachevaia	2-25	18 0	13 0	22 0	14 0	25 0	14 0	7-10 kV	2 6	1 9	3 1	2 0	3 6	2 0
								FEED 6 kV						
Vostochnaia	2-25	20 0	14 0	18 0	15 0	20 0	12 0	23-6 kV	0 9	0 6	0 8	0 7	0 9	0 8
Kostromskaia	1-25	14 0	8 0	17 0	9 0	22 0	10 0	7-10 kV	2 0	1 1	2 4	1 3	3 1	1 4
Kyzyl-Asker	2-20	30 0	27 0	33 0	30 0	31 0	26 0	14-6 kV	2 1	1 9	2 4	2 1	2 2	1 9
Novo-Vostochnaia	2-25	30 0	29 0	28 0	26 0	29 0	26 0	23-6 kV	1 3	1 3	1 2	1 1	1 2	1 1
Alamedin	1-20	13 0	10 0	16 5	11 5	14 0	8 0	13-10 kV	1 0	0 8	1 3	0 9	1 1	0 6
	1-40													
Promyshlennaia	1-40	11 0	8 0	15 0	10 0	18 0	11 0	25-6 kV	0 4	0 3	0 6	0 4	0 7	0 4
	1-31 5													
Yuzhnaia	2-40	20 0	12 0	16 0	14 0	15 0	10 0	15-6 kV	1 3	0 8	1 1	0 9	1 0	0 7
Energeticheskaia	2-25	11 0	8 0	11 0	10 0	13 0	11 0	14-6 kV	0 8	0 6	0 8	0 8	0 9	0 8
Novo-Zapadnaia	2-31 5	24 0	16 0	30 0	18 0	33 0	19 0	14-6 kV	1 7	1 1	2 1	1 3	2 4	1 4
Zapadnaia	2-10	27 5	22 0	31 5	23 0	36 0	26 0	19-6 kV	1 2	0 9	1 4	1 0	1 6	1 1
	1-16							4-10 kV	1 2	0 9	1 4	1 0	1 6	1 1
Aimi	2 16	13 0	9 0	17 0	9 5	22 5	10 0	8 10 kV	2 6	1 5	3 4	1 9	4 5	2 0
Centralnaia I	2-10	10 5	9 5	13 5	11 0	16 0	12 0	10-6 kV	0 5	0 5	0 7	0 6	0 8	0 6
								2-10 kV	2 6	2 4	3 4	2 8	4 0	3 0

Station	Size # MVA	Estimated Loading (MVA) 1997 Max	1997 Nor	2000 Max	2000 Nor	2005 Max	2005 Nor	Number Circuits 6 and 10 kV	Estimated Circuit Loading (MVA) 1997 Max	1997 Nor	2000 Max	2000 Nor	2005 Max	2005 Nor
Centralnaia II	1-10 1-16	14 0	12 0	17 0	13 0	22 0	14 0	16-6 kV	0 9	0 8	1 1	0 8	1 4	0 9
Centralnaia IV	2-10	14 0	12 0	18 0	14 0	22 0	14 0	16-6 kV	0 9	0 8	1 1	0 9	1 4	0 9
Centralnaia VI	2-10	15 0	13 0	16 0	14 0	20 0	18 0	19-6 kV	0 8	0 7	0 8	0 7	1 1	0 9
DSK	1-10 1-6 3	20 0	12 0	10 0	6 0	17 0	9 5	9-6 kV	2 2	1 3	1 1	0 7	1 9	1 1
Electrovacuumnaia	2-10	8 0	6 0	9 0	6 0	12 0	8 0	10-6 kV	0 8	0 6	0 9	0 6	1 2	0 8
MRZ	2-10	8 5	8 5	9 0	9 0	9 5	9 5	10-6 kV	0 9	0 9	0 9	0 9	1 0	1 0
Severnaia	2-10 1-6 3	20 0	12 0	17 0	13 0	19 0	14 0	9-6 kV 4-10 kV Future	1 5	1 3	1 9	1 4	2 1	1 6
Vodocanal	2-6 3	10 1	8 5	11 0	8 5	12 0	8 5	8-10 kV	1 3	1 1	1 4	1 1	1 5	1 1
Molodogvardeiskaia	1-16	16 0	8 0	19 0	9 0	25 0	10 0	3-10 kV	5 4	2 7	6 3	3 0	8 3	3 3
Izdatelstvo	1-6 3 1-4 0	6 0	6 0	9 5	7 0	9 5	6 0	6-10 kV	1 0	1 0	1 6	1 2	1 6	1 0
Penko-Dzhutovaia	2-10 2-40 Future	12 5	12 5	12 5	12 5	30 0	15 5	12-6 kV	1 0	1 0	1 0	1 0	2 5	1 3
Selekccionnaia	2-16	33 0	15 0	36 0	16 0	43 5	16 5	8-10 kV	4 7	2 1	5 1	2 3	6 2	2 4
Energostroi	1-10 1-6 3	4 0	3 5	4 0	3 5	6 5	5 0	3-6 kV	1 3	1 2	1 3	1 2	2 2	1 7
Pikovaia Kotelnaia	2-10	5 0	3 0	8 0	4 0	16 0	8 0	3-6 kV	1 7	1 0	2 7	1 3	5 3	2 7

deterioration of the 10 kV network, direct buried cable system will require replacement of troublesome conductors Based upon a scenario of replacement of segments of cables, depending upon the number of failures per segment, one could expect complete cable replacement by the year 2005

For the maximum loading forecast scenario, underground circuit capacity is ample through the year 2005 The 10 kV cable system would need to be replaced as mentioned above, probably with 25 kV rated cable The annualized growth rate is approximately 7 1% for maximum loading with the majority of load increase due to electrical heating requirements as the city is moving from a centralized system to a de-centralized (individual customer) basis There are spare circuit positions within each station

Inspection of the forecasted normal loading reveals that for the Molodogvardeiskaia and Selekccionnaia circuits, which are of overhead construction and operating at 10 kV, growth patterns will not cause excessive loading on existing circuits through the year 2005

For the maximum loading scenario, addition of overhead circuits to the existing 10 kV bus at each station would allow for the maximum loading forecasted through the year 1997 Circuit load balancing between circuits may be required to assist in reducing circuit demand Spare circuit positions apparently exist at the stations In order to handle the maximum growth through the year 2005, reconductoring of existing circuits and adding additional transformer capacity would be necessary Reconductoring with 95 mm^2 conductors to the major load centers would allow for 5 5 MVA capability per circuit through the year 2005

4.6 Proposed City of Bishkek Transmission and Distribution System Reinforcement Program

The proposed transmission and distribution system reinforcements for the City of Bishkek identified in future power system studies described in Section 4 5 4 are outlined in the following three sections The first, section 4 6 1, will give a description of each reinforcement, followed by a cost estimate of the reinforcement in section 4 6 2 Section 4 6 3 will assign a priority level to each reinforcement

4.6.1 Description of Proposed Reinforcement Program

Transmission System

Table 4 6 1 1 shows the reinforcements necessary for the 1997, 2000, and 2005 time periods

327

Table 4 6 1 1

Bishkek Area Proposed Reinforcement Program

Facility	Recommendation
1997	
Ala-Archa 220/110 kV Substation	Needed to provide an additional bulk power source to Bishkek
Chuiskaia 220/110 kV Substation	Needed to relieve Kant-Ivanovka 110 kV overloads
Orto-Alysh 110/35/10 kV Transformer #2	Needed to relieve overloads on Novo-Vostochnaia 110/35/6 kV transformers
Selectro 35/10 kV Transformer	Needed to replace existing overloaded 35/0 4 kV transformer
Selekccionnaia 110/10 kV Transformer #2	Needed to serve increased load
Aini 110 kV Switchgear	Needed to improve local reliability
Alamedin 110 kV Switchgear	Needed to improve local reliability
Energeticheskaia 110 kV Switchgear	Needed to improve local reliability
Karagachevaia 110 kV Switchgear	Needed to improve local reliability
Kostromskaia 110 kV Switchgear	Needed to improve local reliability
Lenin's Plant 110 kV Switchgear	Needed to improve local reliability
Molodogvardeiskaia 110 kV Switchgear	Needed to improve local reliability
Novo-Vostochnaia 110 kV Switchgear	Needed to improve local reliability
Novo-Yuzhnaia 110 kV Switchgear	Needed to improve local reliability
Novo-Zapadnaia 110 kV Switchgear	Needed to improve local reliability
Pikovaia Kotelnaia 110 kV Switchgear	Needed to improve local reliability
Promyshlennaia 110 kV Switchgear	Needed to improve local reliability
Yuzhnaia 110 kV Switchgear	Needed to improve local reliability
Frunzenskaia-Ala Archa #2*	Needed to relieve Frunzenskaia-Ala Archa #1 220 kV overloads
Glavnaia 110 kV, 100 MVAr Capacitor	Needed to improve voltage profile
Karagachevaia 35 kV, 25 MVAr Capacitor	Needed to improve voltage profile
Kyzyl-Asker 35 kV, 25 MVAr Capacitor	Needed to improve voltage profile
Molodogvardeiskaia 35 kV, 25 MVAr Capacitor	Needed to improve voltage profile
Orto-Alysh 35 kV, 25 MVAr Capacitor	Needed to improve voltage profile
Hydro Station 3 110/35/6 kV Substation	Additional supply point needed in the area
Hydro Station 1 35/6 kV Transformer	Needed to replace existing overloaded transformer
Hydro Station 4 35/6 kV Transformer	Needed to replace existing overloaded transformer
Hydro Station 1-Hydro Station 3 35 kV Circuit	Needed to reconductor existing overloaded circuit
Centralnaia III 35/6 kV Substation	Needed to serve new load areas
Kok-Dzar 110/35/10 kV Substation	Needed to serve new load areas
Kyrgyzskaia 110/10 kV Substation	Needed to serve new load areas
Orok 110/35/10 kV Substation	Needed to serve new load areas
Teplichnaia 110/35/10 kV Transformer #2	Needed to service increased load

*To be operated initially at 220 kV but designed and constructed for 500 kV operation This is the first step in a plan to later extend the line, through new 500 kV construction, to Kemin substation or alternate Northern region location

Facility	Recommendation
2000	
Kostromskaia 110/35/10 kV Transformer #2	Needed to relieve overloads on Novo-Zapadnaia 110/35/6 kV transformer
Kyzyl-Asker 40 MVA, 110/35/6 kV Transformer #1	Needed to replace existing overloaded 20 MVA transformer
Frunzenskaia-Ala Archa-Kemin 500 kV Circuit or Alternative Plan	Needed to serve increased load and for voltage support (second step in staged development)
Molodogvardeiskaia 110/35/10 kV Transformer #2	Needed to serve increased load
ABZ 110/10 kV Substation	Needed to serve new load areas
Asanbai 35/6 kV Substation	Needed to serve new load areas
Chui 110/10 kV Substation	Needed to serve new load areas
Gagarina 110/10 kV Substation	Needed to serve new load areas
Manas-Ata 110/35/10 kV Substation	Needed to serve new load areas
Parkovaia 110/35/10 kV Substation	Needed to serve new load areas
Rassvet 110/35/10 kV Substation	Needed to serve new load areas
Saadaeva 35/10 kV Substation	Needed to serve new load areas
2005	
Zapadnaia 35/6 kV Transformer	Additional supply point needed in the area
Penko-Dzhutovaia 110/35/10 kV Substation	Needed to reconductor existing overload circuit
LGS-Nur 35 kV Circuit	
Electrodvigatel 35/10 kV Substation	Needed to serve new load areas
Konditerskaia 110/10 kV Substation	Needed to serve new load areas
Tunguch 35/10 kV Substation	Needed to serve new load areas
Uchkun 110/35/10 kV Substation	Needed to serve new load areas

Transmission System -- 1997 Winter

Many new facilities are required by the 1997 time period to meet the growing load demand A new 220/110 kV substation is urgently needed to be constructed at Ala Archa It is proposed that this substation would be tapped off the existing Frunzenskaia-Bystrovka 220 kV circuit by 20 kilometers of double circuit overhead conductor The substation will require two 125 MVA, 220/110/10 kV transformers and an 100 MVAr, 110 kV capacitor bank The 110 kV bus would be integrated into the Bishkek network through nine kilometers of double circuit overhead conductor Also required is 0 8 kilometers of overhead 110 kV conductor to link the Novo-Vostochnaia and Lenin's Plant station This link will bisect the 110 kV loop around the City of Bishkek, increasing the reliability of the system by adding a parallel transmission path The new Ala Archa 220/110 kV station will supplement the power supply now provided by the Glavnaia substation and Bishkek TES 1 plant

A new substation, Chuiskaia, is needed to relieve overloads on the Kant-Ivanovka 110 kV line The Chuiskaia substation consisting of 1-125 MVA, 220/110/10 kV transformer and appropriate switchgear will integrate the Glavnaia-Bystrovka 220 kV line into the Tok Mak (Chuiskaia) substation The industrial city of Tok Mak is located to the east of Bishkek

Second 25 MVA, 110/35/10 kV transformers at Teplichnaia and Orto-Alysh are needed Additional transformers needed include Selectro 6 3 MVA, 35/10 kV, Selekccionnaia 16 MVA, 110/10 kV, Hydro Station 1 10 MVA, 35/6 kV, and Hydro Station 4 10 MVA, 35/6 kV A new substation, Hydro Station 3 110/35/6 kV, will be needed with one 25 MVA, 110/35/6 kV transformer The new station will be tapped off the existing Glavnaia - Karagachevaia 110 kV line using approximately three kilometers of overhead conductor The 2 5 kilometer, 35 kV circuit from Hydro Station 1 - Hydro Station 2 - Hydro Station 3 will also need to be reconductored

Capacitors are needed for increased voltage support To reduce active and reactive power losses and to meet reactive power requirements, shunt capacitors are recommended as follows 300 MVAr at Bystrovka 220 kV, 100 MVAr at Glavnaia 110 kV, and 25 MVAr each at Karagachevaia, Kyzyl-Asker, Molodogvardeiskaia, and Orto-Alysh 35 kV substations These capacitors will also reduce reactive power loading on the transformers

System protection modifications and switchgear is also needed on the 110 kV system at Aini, Alamedin, Energeticheskaia, Karagachevaia, Kostromskaia, Molodogvardeiskaia, Novo-Vostochnaia, Novo-Yuzhnaia, Novo-Zapadnaia, Pikovaia Kotelnaia, Promyshlennaia, and Yuzhnaia substations to improve the local reliability and operation and maintenance flexibility Such improvements must consider the Lenin's Plant which is a customer owned substation

The four new substations needed to serve new load areas are Centralnaia III, Kok-Dzar, Kyrgyzskaia, and Orok The Centralnaia III 35/6 kV substation will be connected to the 35 kV network through 1 6 kilometers of underground cable to Novo-Vostochnaia and by 2 kilometers of underground cable to Vostochnaia substations The Centralnaia III substation will have two 10 MVA, 35/6 kV transformers

The Kok-Dzar substation will be tapped from the Bishkek TES - Novo-Vostochnaia 110 kV circuit by one kilometer of overhead conductor The Kok-Dzar substation will utilize two 25 MVA, 110/35/10 kV transformers

The Kyrgyzskaia substation is to be tapped off of the Orto-Alysh - Aini 110 kV circuit with 0 5 kilometers of overhead conductor and have two 16 MVA, 110/10 kV transformers The Orok substation is tapped from the Aini - Yuzhnaia 110 kV with 0 8 kilometers of overhead line and will utilize two 25 MVA, 110/35/10 kV transformers

Figures D-2 and D-6 show the transmission system diagram and one-line map, respectively, for the 1997 time period

Transmission System -- 2000 Winter

For the 2000 winter period, additional 25 MVA, 110/35/10 kV transformers are needed at Kostromskaia and Molodogvardeiskaia The 20 MVA, 110/35/6 kV transformer at Kyzyl-Asker also needs to be replaced with a 40 MVA unit

Eight new substations are anticipated to be needed in the Bishkek area to serve new load The ABZ 110/10 kV substation will be tapped off the Glavnaia-Teplichnaia 110 kV line with one kilometer of overhead conductor and utilize two 10 MVA, 110/10 kV transformers

The Asanbai 35/6 kV substation will be tapped from the Novo-Vostochnaia-Vodokanal 35 kV circuit with 0 5 kilometers of overhead line and have two 10 MVA transformers The Chui substation will be tapped into the Karagachevaia-Molodogvardeiskaia 110 kV line and have two 25 MVA, 110/10 kV transformers The Gagarina substation will be tapped off the Yuzhnaia-Lenin's Plant 110 kV circuit with 0 5 kilometers of overhead conductor and have two 25 MVA, 110/10 kV transformers

The Manas-Ata substation will be tapped from the Glavnaia-Teplichnaia 110 kV circuit by 0 5 kilometers of overhead conductor and utilize two 16 MVA, 110/35/10 kV transformers The Parkovaia substation will be constructed at the Orto-Alysh 110 kV tap point on the southern portion of the 110 kV ring around the city and have two 16 MVA, 110/35/10 kV transformers The existing Rassvet 35/10 kV substation will be replaced by a 110/35/10 kV substation having two 25 MVA, 110/35/10 kV transformers The Saadaeva substation will be tapped off the Teplichnaia-Molodogvardeiskaia 35 kV circuit and have two 10 MVA, 35/10 kV transformers

Under present load growth conditions, an additional power supply will be needed in the Northeastern part of the Republic by 2000 One possibility is the Frunzenskaia - Kemin 500 kV project, although further analyses would be required to fully evaluate the effectiveness of this option The Frunzenskaia-Kemin project consists of 216 kilometers of 500 kV overhead line construction from Frunzenskaia substation to a new substation Kemin At Kemin, a 500 MVA, 500/220/10 kV transformer is needed, along with 20 kilometers of 220 kV overhead line construction to integrate the Kemin substation into the Bystrovka-Issyk-Kul 220 kV circuits

This project could be developed, as recommended herein, in two parts The first part (1997) would be to construct 100 km from Frunzenskaia-Ala Archa The line would be of 500 kV design but initially operated at 220 kV Subject to the availability of financing and further detailed power system planning and engineering studies, the line could be extended to Kemin or another location and converted to 500 kV operation The performance of this configuration is subject to other reinforcements to the Kyrgyz and surrounding bulk power supply systems The scope and timing of these reinforcements, including the Kambarata hydro plant and other reinforcements to the 220 kV and 500 kV system, are uncertain Other alternatives, which were not evaluated due to the lack of detailed power system modeling data, would need to be considered to determine the most cost effective solution

Figures D-3 and D-7 show the transmission system diagram and one-line map, respectively, for the 2000 time period

Transmission System -- 2005 Winter

The Penko-Dzhutovaia 35/6 kV substation will need to be replaced with a 110/35/6 kV substation connected at 110 kV to the Bishkek TES by 1 8 kilometers of double circuit

331

underground cable Two 40 MVA, 110/35/6 kV transformers will also be needed at the Penko-Dzhutovaia substation

An additional 10 MVA, 35/6 kV transformer will be needed at the Zapadnaia substation by the 2005 time period The 1 6 kilometer LGS - Nur 35 kV circuit will also need to be reconductored using a larger wire size

Four additional substations are needed to serve the new load areas in 2005 The Electrodvigatel substation will be connected by 3 kilometers of 35 kV underground cable to the Lermontova substation and by 2 kilometers of 35 kV underground cable to the Alamedin substation There will also be two 6 3 MVA, 35/10 kV transformers at the Electrodvigatel substation

The Konditerskaia substation will be tapped off the Lenin's Plant - Yuzhnaia 110 kV circuit and utilize two 16 MVA, 110/10 kV transformers The Tunguch substation will be tapped off the Novo-Pokrovka - DSK 35 kV line and will have two 10 MVA, 35/10 kV transformers The Uchkun substation will be tapped from the Alamedin - Kant 110 kV line and use two 16 MVA, 110/35/10 kV transformers at the substation

Figures D-4 and D-8 show the transmission system diagram and one-line map, respectively, for the 2005 time period

Distribution System

The proposed reinforcements for the Bishkek distribution system include recommendations to provide to the local utility new underground fault locating equipment, including trucks, be purchased for the operation of the Distribution System New splicing tools, equipment and retraining should be made available to handle installed cable systems Based upon a selected number of stations and circuits, the following additional recommendations for system improvements within the utility of the City of Bishkek can be made

1) Maintain the 6-10 kV operation voltage within the City

2) Replace failed underground cable with 25 kV class XLPE cable, based upon failures within cable segments Two to three failures within one segment should be the break-even point to replace existing cables

3) Provide 300 ampere capacity underground cables, with XLPE insulation, for new circuits and implement a 10 year cable replacement program designed to upgrade the city's underground cable system

4) Increase conductor size to 95 mm^2 for overhead 10 kV circuits as suggested by load forecast

4.6.2 Capital Cost Estimates of Proposed Reinforcement Program

Transmission System

The cost estimates for the proposed transmission system reinforcements identified in Section 4 6 1 are shown in Table 4 6 2 1

Table 4 6 2 1

Bishkek Area Reinforcement Cost Estimates

Facility	Cost Estimate (Thousands of 1995 US $) Material	Labor	Total
1997			
Ala-Archa 220/110 kV Substation (2-125 MVA)	9647	1146	10793
Chuiskaia 220/100 kV Substation (1-125 MVA)	1992	279	2272
Orto-Alysh 110/35/10 kV Transformer #2 (25 MVA)	1143	101	1244
Selectro 35/10 kV Transformer (6 3 MVA)	453	24	477
Selekccionnaia 110/10 kV Transformer #2 (16 MVA)	1217	113	1330
Aini 110 kV Switchgear	246	26	272
Alamedin 110 kV Switchgear	246	26	272
Energeticheskaia 110 kV Switchgear	246	26	272
Karagachevaia 110 kV Switchgear	246	26	272
Kostromskaia 110 kV Switchgear	126	14	140
Molodogvardeiskaia 110 kV Switchgear	126	14	140
Novo-Vostochnaia 110 kV Switchgear	246	26	272
Novo-Yuzhnaia 110 kV Switchgear	246	26	272
Novo-Zapadnaia 110 kV Switchgear	246	26	272
Pikovaia Kotelnaia 110 kV Switchgear	246	26	272
Promyshlennaia 110 kV Switchgear	246	26	272
Yuzhnaia 110 kV Switchgear	246	26	272
Frunzenskaia-Ala Archa #2	13514	2560	16074
Glavnaia 110 kV, 100 MVAr Capacitor	1000	50	1050
Karagachevaia 35 kV, 25 MVAr Capacitor	175	9	184
Kyzyl-Asker 35 kV, 25 MVAr Capacitor	175	9	184
Molodogvardeiskaia 35 kV, 25 MVAr Capacitor	175	9	184
Orto-Alysh 35 kV, 25 MVAr Capacitor	175	9	184
Hydro Station 3 110/35/6 kV Substation (25 MVA)	1425	428	1853
Hydro Station 1 35/6 kV Transformer (10 MVA)	110	4	114
Hydro Station 4 35/6 kV Transformer (10 MVA)	110	4	114
Hydro Station 1-Hydro Station 3 35 kV Circuit	75	30	105
Centralnaia III 35/6 kV Substation (2-10 MVA)	345	104	449
Kok-Dzar 110/35/10 kV Substation (2-25 MVA)	1655	497	2152
Kyrgyzskaia 110/10 kV Substation (2-16 MVA)	880	265	1145
Orok 110/35/10 kV Substation (2-25 MVA)	1650	495	2145
Teplichnaia 110/35/10 kV Transformer #2	725	218	943

333

Facility	Cost Estimate (Thousands of 1995 US $) Material	Labor	Total
2000			
Kostromskaia 110/35/10 kV Transformer #2 (25 MVA)	700	210	910
Kyzyl-Asker 40 MVA, 110/35/6 kV Transformer #1	500	10	510
Molodogvardeiskaia 110/35/10 kV Transformer #2 (16 MVA)	700	210	910
ABZ 110/10 kV Substation (2-10 MVA)	619	38	657
Asanbai 35/6 kV Substation (2-10 MVA)	345	104	449
Chui 110/10 kV Substation (2-25 MVA)	1050	315	1365
Gagarina 110/10 kV Substation (2-25 MVA)	1050	315	1365
Manas-Ata 110/35/10 kV Substation (2-16 MVA)	1425	428	1853
Parkovaia 110/35/10 kV Substation (2-16 MVA)	1425	428	1853
Rassvet 110/35/10 kV Substation (2-16 MVA)	1215	365	1580
Saadaeva 35/10 kV Substation (2-10 MVA)	350	105	455
Ala Archa-Kemin 500 kV	18337	2760	21097
2005			
Zapadnaia 35/6 kV Transformer (10 MVA)	110	4	114
Penko-Dzhutovaia 110/35/10 kV Substation (40 MVA)	1714	67	1781
LGS-Nur 35 kV Circuit	48	19	67
Electrodvigatel 35/10 kV Substation (2-6 3 MVA)	265	104	369
Konditerskaia 110/10 kV Substation (2-16 MVA)	880	265	1145
Tunguch 35/10 kV Substation (2-10 MVA)	350	105	455
Uchkun 110/35/10 kV Substation (2-16 MVA)	1414	78	1492

Distribution System

Cost Estimates	Material	Labor	Total
City of Bishkek			
Underground Cable Replacement, 850 km of 25 kV-3ϕ Cable	$33,490	$3,783	$37,273
Substation, 0 4 kV Upgrade 650 units	1,950	1,300	3,250
Reconductor Overhead Distribution at 10 kV, 140 km	1,402	1,293	2,695

4 6 3 Priority of Proposed Reinforcement Projects

Priorities of the proposed reinforcement program will be classified into one of three designations Priority I is the highest priority and has the most urgent need Priority II is the

middle priority level and a less urgent need than Priority I Priority III is the lowest priority with the correspondingly least urgent need Table 4 6 3 1 shows the priority of the proposed Bishkek area reinforcements for 1997, 2000, and 2005

Table 4 6 3 1

Bishkek Area Priority of Proposed Reinforcement Program

Facility	Priority
1997	
Ala Archa 220/110 kV Substation	I
Chuiskaia 220/110 kV Substation	I
Orto-Alysh 110/35/10 kV Transformer #2	I
Selectro 35/10 kV Transformer	I
Selekccionnaia 110/10 kV Transformer #2	I
Aini 110 kV Switchgear	I
Alamedin 110 kV Switchgear	I
Energeticheskaia 110 kV Switchgear	I
Karagachevaia 110 kV Switchgear	I
Kostromskaia 110 kV Switchgear	I
Molodogvardeiskaia 110 kV Switchgear	I
Novo-Vostochnaia 110 kV Switchgear	I
Novo-Yuzhnaia 110 kV Switchgear	I
Novo-Zapadnaia 110 kV Switchgear	I
Pikovaia Kotelnaia 110 kV Switchgear	I
Promyshlennaia 110 kV Switchgear	I
Yuzhnaia 110 kV Switchgear	I
Teplichnaia 110/35/10 kV Transformer #2	I
Glavnaia 110 kV, 100 MVAr Capacitor	I
Karagachevaia 35 kV, 25 MVAr Capacitor	I
Kyzyl-Asker 35 kV 25 MVAr Capacitor	I
Molodogvardeiskaia 35 kV, 25 MVAr Capacitor	I
Orto-Alysh 35 kV, 25 MVAr Capacitor	I
Frunzenskaia-Ala Archa #2	I
Hydro Station 3 110/35/6 kV Substation	II
Hydro Station 1 35/6 kV Transformer	II
Hydro Station 4 35/6 kV Transformer	II
Hydro Station 1-Hydro Station 3 35 kV Circuit	II
Centralnaia III 35/6 kV Substation	III
Kok-Dzar 110/35/10 kV Substation	III
Kyrgyzskaia 110/10 kV Substation	III
Orok 110/35/10 kV Substation	III

335

Facility	Priority
2000	
Kostromskaia 110/35/10 kV Transformer #2	I
Kyzyl-Asker 40 MVA, 110/35/6 kV Transformer #1	I
Molodogvardeiskaia 110/35/10 kV Transformer #2	I
Frunzenskaia-Ala Archa-Kemin 500 kV Circuit	I
ABZ 110/10 kV Substation	III
Asanbai 35/6 kV Substation	III
Chui 110/10 kV Substation	III
Gagarina 110/10 kV Substation	III
Manas-Ata 110/35/10 kV Substation	III
Parkovaia 110/35/10 kV Substation	III
Rassvet 110/35/10 kV Substation	III
Saadaeva 35/10 kV Substation	III
2005	
Zapadnaia 35/6 kV Transformer	I
Penko-Dzhutovaia 110/35/10 kV Substation	I
LGS-Nur 35 kV Circuit	II
Electrodvigatel 35/10 kV Substation	III
Konditerskaia 110/10 kV Substation	III
Tunguch 35/10 kV Substation	III
Uchkun 110/35/10 kV Substation	III

Transmission System – 1997 Winter

The priority I needs for the 1997 time period include the Ala Archa 220/110 kV project, the addition of capacitors at Ala Archa, Glavnaia, Karagachevaia, Kyzyl-Asker, Molodogvardeiskaia, Orto-Alysh, as well as Bystrovka in Northeastern Kyrgyzstan Switchgear at the 110 kV voltage level at Aini, Alamedin, Energeticheskaia, Karagachevaia, Kostromskaia, Molodogvardeiskaia, Novo-Vostochnaia, Novo-Yuzhnaia, Novo-Zapadnaia, Pikovaia Kotelnaia, Promyshlennaia, and Yuzhnaia are also Priority I The Chuiskaia 220/110 kV substation located to the east of the City is also included in the Priority I program The addition of transformation at Orto-Alysh, Selectro, Selekccionnaia and Teplichnaia are also determined to be Priority I The Frunzenskaia-Ala Archa #2 circuit is also included as a Priority I project

Priority II reinforcements include the Hydro Station reinforcements These have been determined to be Priority II because the load may not grow as quickly as expected in these areas, and also it may be possible to generate some power at the Hydro Stations to supply power requirements in the local vicinity This would reduce the immediate need for the reinforcements in the area

Priority III items are the additional substations required to serve new load, as construction patterns by residents are very sporadic and difficult to predict due to the lack of building materials Another issue is that since these substations are needed for new areas of load growth, the cost for the substations could be subsidized by the individuals responsible for the new load That is, the new customers in an area can help the power company purchase the necessary equipment, then let the power company install, maintain and operate the new facilities Therefore, the Centralnaia III, Kok-Dzar, Kyrgyzskaia, and Orok substations are Priority III reinforcements

Transmission System -- 2000 Winter

For the 2000 Winter, Priority I reinforcements are the Frunzenskaia-Kemin 500 kV project (or an alternative reinforcement project for Northeastern Kyrgyzstan) and the addition of second transformers at Kostromskaia and Molodogvardeiskaia, along with the replacement of the 20 MVA transformer at Kyzyl-Asker with a 40 MVA unit

For similar reasons discussed for 1997 Winter above, the new load area substations ABZ, Asanbai, Chui, Gagarina, Manas-Ata, Parkovaia, Rassvet, and Saadaeva are Priority III

Transmission System -- 2005 Winter

The Priority I reinforcements for 2005 are additional Zapadnaia transformation and the Penko-Dzhutovaia 110/35/6 kV substation

Reconductoring the LGS - Nur 35 kV circuit has been given a Priority II level of importance

The new load area substations Electrodvigatel, Konditerskaia, Tunguch, and Uchkun are Priority III

Distribution System

For the Distribution System of the City of Bishkek, an ten year program designed to replace all 850 km of three-phase 6-10 kV underground cable is needed This cable replacement should be made with 25 kV rated cable of modern design and operated at 6-10 kV through and beyond the year 2005 Additional transformer and circuit capacity will be required depending on the growth scenario encountered

4 6 4 Proposed Schedule for the Distribution Reinforcement Program

Provide, in 1996, for training, new equipment for fault locating, including trucks, to improve existing system reliability Distribution Cable Replacement Program, Annual from 1996 through 2005 - $3,727,300 Reconductor overhead lines and upgrade line transformer facilities - 1996 and 1997, annually - $2,972,500

Provide additional transformer capacity for heating load, if it develops

337

4.7 Assessment of Operation of City of Bishkek Transmission and Distribution System Following Reinforcement

Transmission System

Following the addition of the Ala Archa 220/110 kV project, the transmission grid should be able to supply 300 to 400 MW of the power requirements for the City of Bishkek The remainder of the City's demand will have to come from generation at Bishkek TES Reinforcements to the 110 and 35 kV networks, including additional transformation, replacing several overloaded transformers with larger transformers, and reconductoring several lines, will increase the capacity of these systems The addition of 110 kV switchgear at numerous substations within the City will greatly increase the reliability of the system and reduce the number of customers affected under outage conditions Additional substations will have to be constructed as new load areas develop, but the 110 and 35 kV networks have capacity for these additions Transformers which step the voltage down to distribution level (6 or 10 kV) will have to be replaced with larger units as local load grows Electric resistance heating in Bishkek should be discouraged as the power system cannot be expanded fast enough to meet the demand it would place on the network

The Bishkek system is still susceptible to overloaded conditions during peak load, however, if critical facilities are out of service These facilities include generation at Bishkek TES, Ala Archa and Glavnaia 220/110 kV transformers, Frunzenskaia 500/220 kV transformers, and the 220 kV lines from Frunzenskaia across Northern Kyrgyzstan Generation at Bishkek TES is doubly important as not only does the plant generate electricity, but also heat for the district heating system Should there be generation outages at Bishkek TES, electricity production is reduced as well as heat production, causing residents to utilize electric resistance heating, raising the electrical demand on the system at a time when supply has been reduced Therefore, it is especially critical that Bishkek TES be fully or near-fully operational and have no fuel shortages at the time of winter peak conditions

Distribution System

From this analysis, it would appear that the City of Bishkek can provide additional service and plan for the future by replacing the direct buried cable system rated 10 kV with new XLPE cables rated 25 kV, 300 amperes (approximately #4/0 conductor) An estimated 850 kilometers of 10 kV cable exist and is in very poor operating condition Continued operation at 6-10 kV can be assured in terms of capacity and not require replacement of all distribution (6 kV or 10 kV/0 4 kV) transformers Additional circuit positions exist in most stations and with reconductoring of cable circuits with new 25 kV cable, adequate margin for future loads can be designed into the present system Except for increasing the voltage rating for all underground cable supplied as replacement or for new circuits, the need to increase actual operating voltage through the year 2005 is not necessary nor is it economic The need to increase the system operating voltage to either a 20 kV or 30 kV level is not justified Typical economical loading of circuits for 4 kV, 15 kV and 35 kV voltages in the USA are as follows

Voltage (kV)	MVA	Amperes
4	3	400
15	9	400
35	24	400

It would appear that maximum circuit loading in Kyrgyzstan through the year 2005 rarely exceeds 5 MVA, thus larger conductors or higher operating voltages are not needed

What is needed is improved operational training, especially within underground cable systems, new tools and a systematic replacement program for existing 6-10 kV distribution cable circuit conductors (cables)

4 7 1 Expected Benefits from Implementation of Proposed Reinforcement Program

The proposed reinforcement program will allow the City of Bishkek to support approximately 600 to 800 MW of load, depending upon the generation output of the Bishkek TES This is one and one-half to two times present load demand The proposed reinforcement program would also improve the voltage profile for the city, significantly improve the reliability of the network, and reduce transmission losses by 10 to 15% The increase in the capacity of the Bishkek system will provide for future growth in electric demands while improving the reliability and quality of the power supply to existing and new customers The increased capacity will also allow for more industrial and commercial activity, helping in the to retain growth of the Kyrgyz economy

For the Distribution System of the City of Bishkek, continued supply of electrical energy will be improved and maintained, with the prospect of future energy heating requirements being satisfied with "in country" resources

4 8 Rural Area Transmission and Distribution Study

The City of Bishkek transmission system is a compact system of high load density The system design, heavy reliance on underground cables, 110 kV loop, Bishkek TES1 and other attributes make it non-representative of the majority of areas served by the KNEHC The project scope called for the examination of a rural area that would be representative of the power system designs in the rural areas of Kyrgyzstan The project team selected the Kalinin area of the Chu Electric Company for analysis The Kalinin area was judged to be representative of other rural areas in the Republic

Because the Chu Electric Company and the KNEHC do not maintain a power flow model or database suitable for the analysis or planning of the 110 kV and lower voltage transmission system, engineers from the Kyrgyz team, under the direction of the AEP Energy Services, Inc team, assembled the network characteristic data required for power flow simulation studies As already noted, the Russian power system software utilizes physical units The AEP team assisted the Kyrgyz personnel in converting the data from physical units to the per-unit system

which is required with the PSS/E software used in the transmission planning study The next section describes the organization of the Chu Electric Company, characteristics of the Kalinin area, and the results of the planning study

4.8.1 Kalinin Area of the Chu Electric Company

Chu Electric Company Service Areas

The Chu Electric Company is one of eight transmission companies within the Kyrgyz National Energy Holding Company organization The Chu Electric Company is responsible for electric power supply and maintenance of 500 kV and lower voltage facilities in the Chu Valley region covering a total territory of 12,800 square kilometers

The Bystrovka Electric Company is located to the east and the Naryn and Osh Electric Companies are located to the south of the Chu Electric Company The service area of the Chu Electric Company borders in the north and west on Kazakhstan

The Chu Electric Company is administratively divided into six area electric networks The six divisions of the Chu Electric Company are

- Kantsky
- Alamedinsky
- Sukuluksky
- Moskovsky
- Kalininsky
- Panfilovsky

The Kalinin area was chosen for study as a representative rural area of the Kyrgyz Republic The findings for the Kalinin area will be extrapolated to similar rural areas of Kyrgyzstan

Kalinin Service Area

The Kalinin area of the Chu Electric Company is located about 40 kilometers west of the City of Bishkek As shown in Figure 4 8 1, the Kalinin area is located between the Panfilov and Moskov areas

4.8.2 Description of Existing Transmission and Distribution Facilities

The Chu Electric Company transmission system is comprised of a network of transmission lines, principally operating at voltages of 220 kV, 110 kV and 35 kV Table 4 8 2 1 lists the transformer capacity installed in the Chu Electric Company as of December 31, 1994

Figure 4 8 1
Chu Electric Company
Kalinin and Neighboring Areas

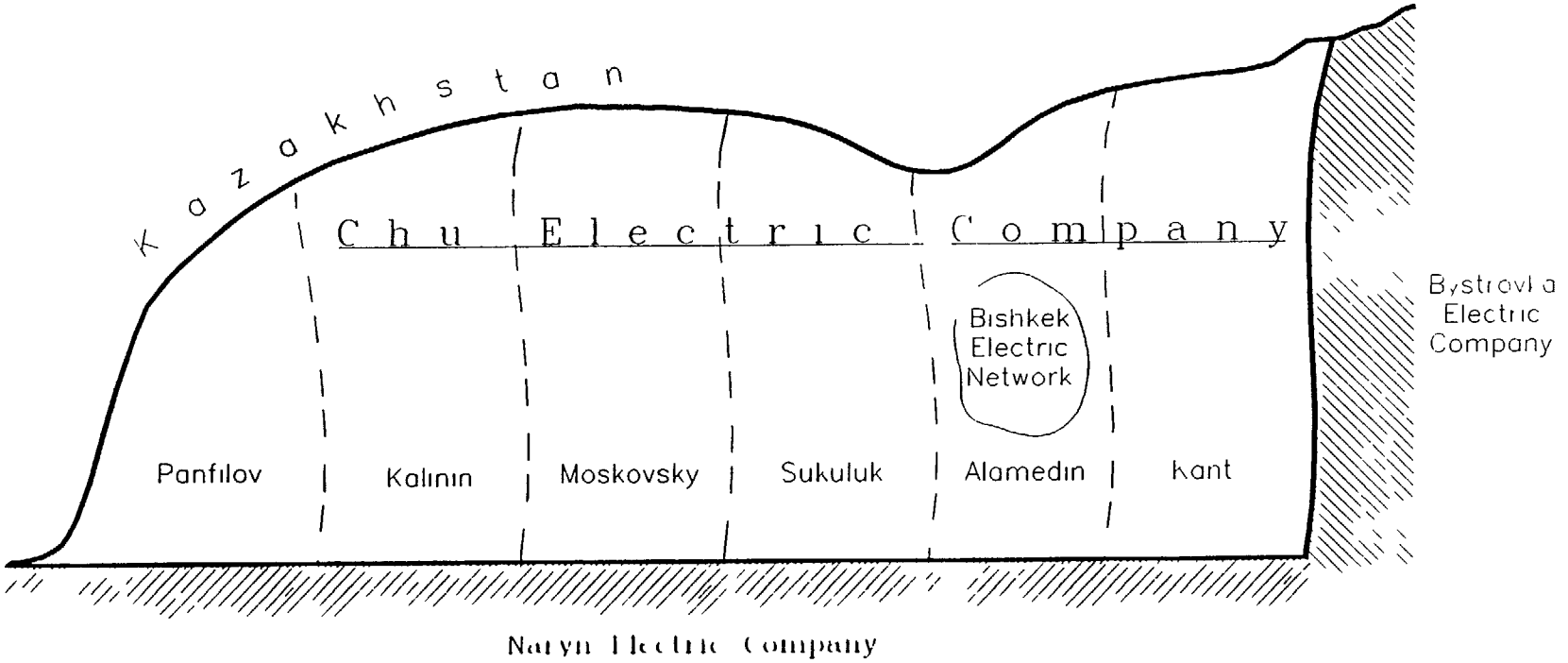

Table 4 8 2 1

Chu Electric Company
Substations In-Service as of December 31, 1994

Voltage	Number of Substations	Transformer Capacity (MVA)
500/220 kV	1	1002
220/110 kV	2	500
110/35/10-6 kV	13	380 3
110/10 kV	1	12 6
35/10 kV	71	152 4

All of the 35 kV and higher voltage substations, including the Frunzenskaia 500/220/110 kV, Glavnaia 220/110/10 kV and Kara-Balta 220/110/10 kV substations, are maintained by the centralized Chu Electric Company Electrotechnical Service Department

Electrotechnical Service Department (Substation Maintenance)

The Chu Electrotechnical Service Department is responsible for 88 substations ranging in voltage from 35 kV to 500 kV with an installed transformer capacity of 2,047 MVA and 74 substations for agricultural purposes having an installed capacity of 555 MVA

The Kalinin group of the Electrotechnical Service (ETS) is responsible for servicing and maintaining eleven 35 kV and higher voltage substations in the Kalinin area and ten 35 kV and higher voltage substations in the Panfilov area The Kalinin group of ETS consists of eighteen workers including two maintenance crews each consisting of five people The Kalinin group of ETS has only one line truck available for its two crews The Kalinin ETS is responsible for maintaining spare parts, however, none of the parts needed for emergency repairs are available

The inspection and repair of switchgear and transformers are conducted once every two years The switchgear are overhauled on a schedule of once every eight years and the transformers are overhauled on a schedule of once every twelve years

Industrial Service of High-Voltage Overhead Transmission Lines (Transmission Line Maintenance)

The Chu Industrial Service of High-Voltage Overhead Transmission Lines operates and maintains the company's 35 kV to 500 kV transmission lines At the end of 1993, the Chu Electric Company operated some 10,684 kilometers of transmission and distribution lines as summarized in Table 4 8 2 2

342

Table 4 8 2 2

Chu Electric Company
Transmission and Distribution Lines

Voltage (kV)	Length (km)	Voltage (kV)	Length (km)
500	176	20 (dc)	20
220	404	10	3856
110	573	6	290
35	838	0 4	4527

The Chu Industrial Service of High Voltage Overhead Transmission Lines also maintains the three 500 kV transmission lines associated with the Frunzenskaia 500 kV substation One 500 kV line connects Frunzenskaia substation to the Toktogul Hydro Power Plant and two 500 kV transmission lines run north and northwest from Frunzenskaia into Kazakhstan The Frunzenskaia substation is interconnected at 500 kV with the Alma-Ata and Dzhambul 500 kV stations in Kazakhstan The 110 and 220 kV overhead transmission lines cross the Chu Valley from west to east and unite the northern Kyrgyzstan Electric Power System with the Naryn and Issyk-Kul electric systems

The Kalinin High Voltage Transmission Line Service Group maintains the lines in the Panfilovsky, Kalininsky and Moskovsky areas as summarized in Table 4 8 2 3

Table 4 8 2 3

Transmission Lines Maintained by the
Kalinin High Voltage Overhead Transmission Line Service Department

Area	Voltage (kV)	Length (km)
Panfilovsky	500	176
Kalininsky	220	245
	110	87
	35	164
Moskovsky	110	108
	35	189

The Kalinin High Voltage Overhead Line Service (HVS) Group is comprised of sixteen workers, eleven of which are electricians The equipment available to the HVS maintenance crew includes a line truck, a bucket truck, welding unit and a car The crew does not have a crane which is needed for maintenance and repair work There is an inadequate stock of materials to perform maintenance The transmission lines are inspected once every six to seven years with other repairs performed in response to emergencies as they arise

Kalinin Transmission Facilities

The Kalinin area is served by a network of 35 kV transmission lines as shown in Figure D-9 The one-line map of the Kalinin area is shown in Figure D-13 The principal source of supply to the Kalinin area is the Kara-Balta 220/110 kV transformers The Kalinin area 35 kV network is supplied by the Kara-Balta TES 110/35 kV and Kosh-Tegermen 110/35 kV substations, supplemented by the Besh-Terek 110/35 kV substation located in the Moskovsky area The substations serving the Kalinin area are listed in 4 8 2 4

Kalinin Distribution Facilities

The Kalinin Area of the Chu Electric Company comprises both transmission and distribution facilities Approximately nine transmission/subtransmission stations make up the majority of distribution energy sources Typical circuits of 10 kV exit these stations to cover a very rural area These facilities are predominately overhead facilities of small kVA sized transformers with long lower voltage secondaries covering the terrain

4 8.3 Assessment of Physical Condition of Transmission and Distribution Facilities

As indicated previously, an assessment of the physical condition of the transmission and distribution facilities was performed The details of the assessment are provided in Appendix E of this report

Table 4 8 2 4

Kalının Area
Chu Electric Company and Customer Owned Substations

Substation	Voltage (kV)	Transformer Capacity (MVA)	Notes
Kosh-Tegermen	110/35/10	2-25	
Kara-Balta TES	110/35/10	2-20	Customer substation
Stavropolovka	35/10	2-4 0	
Budenovka	35/10	2-2 5	
Ochıstnyıe Sooruzhenıa	35/10	4 0	Customer substation
Alekseevka	35/10	2-6 3	
Kalınınskaıa Hydro	35/10	2-10	(Bıshkek Electric Co)
Kyzyl-Oktıabr	35/10	2 5	
Kara-Balta Sugar	35/10	4 0	Customer substation
Novo-Nıkolaevka	35/10	4 0	
Burovaıa	35/6	2 5	Customer substation
Sosnovka	35/10	2-4 0	
Turuk	35/0 4	0 1	Customer substation
Ak-Zhol	35/10	1 8	Customer substation
Tuıa-Ashu North	35/10	4 0	
Tuıa-Ashu South	35/10	4 0	
Susamyr	35/6	2 5	
Melkombınat	35/10	4 0	Customer substation
Bakyt	35/10	4 0	Customer substation
Severnaıa	35/10	4 0	Customer substation

4 8.4 Assessment of Operation of Transmission and Distribution Facilities -- Current Conditions

Chu Electric Company Historical Load Data

According to control measurements, the electric energy consumption in the Chu Electric Company has increased at an average annual rate of 3 7% over the period of 1990 to 1994 The industrial usage in the Chu service area has dropped substantially during this period The

345

residential use of electricity has, however, more than offset the drop in industrial use as summarized in Table 4 8 4 1

Table 4 8 4 1

Chu Electric Company
Electric Energy Consumption
1990-1994

Sector	Energy Consumption (million kWh) 1990	1991	1992	1993	1994	Average Annual Growth (%)
Industry	678 5	688 6	581 9	486 6	376 9	-15 8
Agriculture	420 5	457 2	374 8	416 1	338 5	-5 5
Commercial	158 8	224 0	285 3	234 3	216 1	8 0
Residential	254 8	340 8	548 8	654 4	816 6	33 7
TOTAL	1512 6	1710 6	1790 8	1791 4	1748 1	3 7

The winter maximum loads in the Chu Electric Company grew by 18% from the 1992/1993 winter to 1994/1995 winter period The maximum demands are summarized in Table 4 8 4 2

Table 4 8 4 2

Chu Electric Company
Winter Maximum Loads

Winter Period	Seasonal Demand Maximum	Date
1992/1993	380 MW	February 19, 1993
1993/1994	408 MW	January 24, 1994
1994/1995	449 MW	January 16, 1995

Table 4 8 4 3 illustrates the Kalinin area substation historical transformer loading during the winter periods from 1988 to 1993 This table shows that the transformer loadings are generally increasing, especially in the more densely populated areas which are supplied by the Alekseevka, Kalininskaia, and Novo-Nikolaevka substations In the past as transformers neared their full capability, the transformers were replaced with a higher rated unit If other transformers were not being fully utilized, they were replaced with a smaller transformer These transformer replacements have been documented in the Notes section of Table 4 8 4 3

Table 4 8 4 4 shows the Kalinin area substation historical transformer loading during the summer periods from 1988 to 1994 The summer loadings have not appreciably increased over this period and are well below the levels experienced during the winter This indicates that the winter is the most critical period for the Kalinin area due to the maximum load that needs to be served

Kalinin Transmission Facilities

There are several critical transmission facilities in and around the Kalinin area which have very dramatic negative impacts upon area performance should these facilities be out of service during winter peak conditions These facilities include the two Frunzenskaia 500/220 kV transformers, which are the only 500 kV step-down transformers in the Northern part of Kyrgyzstan, the two Frunzenskaia-Kara-Balta 220 kV transmission lines that bring bulk power to the area, and the previously mentioned principal sources of supply to the 35 kV network -- Kara-Balta 220/110 kV, Kara-Balta TES 110/35 kV, Kosh-Tegermen 110/35 kV, and Besh-Terek 110/35 kV substations

Each winter system operators are very concerned with the loading and status of the Frunzenskaia 500/220 kV transformers and the Frunzenskaia - Kara-Balta 220 kV transmission lines because of their necessity in providing bulk power to the Northern portion of Kyrgyzstan

Kalinin Distribution Facilities

The Kalinin Region is an Overhead Distribution, 10 kV System - Maximum design loading based upon overhead conductor kV are

215A = 2 2 MVA @ 6 kV3 7 MVA @ 10 kV13 MVA @ 35 kV
265A = 2 7 MVA4 6 MVA16 MVA
320A = 3 3 MVA5 5 MVA19 MVA

The existing loading on the distribution circuits indicate that overloading of facilities, under normal conditions, is unlikely More attention to maintenance would improve the operational aspects of this system

Table 4 8 4 3

CHU ELECTRIC COMPANY
Kalinin Area Substation Historical Transformer Loading
Winter 1988-1993
Page 1 of 2

No	Station Name	Voltage Transformer (kV)	Designation	Capacity (MVA)	Current Rating (Amps)	12/1988 Measured Loading (Amps)	12/1988 Loading/ Rating (%)	Current Rating (Amps)	12/1989 Measured Loading (Amps)	12/1989 Loading/ Rating (%)	Current Rating (Amps)	12/1990 Measured Loading (Amps)	12/1990 Loading/ Rating (%)
1	Alekseevka	35/10	T 1	4 0 (6 3)	220	80	36 4	220	110	50 0	220	160	72 7
			T 2	4 0 (6 3)	220	65	29 6	220	150	68 2	220	175	79 6
2	Sosnovka	35/10	T 1	4 0	220	120	54 6	220	123	55 9	220	130	59 1
3	Tuia-Ashu South	35/10	T-1	1 8	165	40	24 2	165	35	21 2	165	35	21 2
4	Tuia Ashu North	35/10	T-1	4 0	220	30	13 6	220	50	22 7	220	50	22 7
5	Kalininskaia	35/10	T-1	10 0	550	100	18 2	550	145	26 4	550	190	34 6
			T-2	10 0	550	360	65 5	550	380	69 1	550	360	65 5
6	Novo-Nikolaevka	35/10	T 1	1 6 (4 0)	84	75	89 3	84	85	101 2	220	92	41 8
7	Stavropolovka	35/10	T 1	4 0	220	87	39 6	220	75	34 1	220	75	34 1
			T 2	4 0	220	25	11 4	220	45	20 5	220	40	18 2
8	Kyzyl-Oktiabr	35/10	T 1	2 5	137 5	45	32 7	137 5	40	29 1	137 5	35	25 5
9	Turuk	35/0 4	T-1	0 1	144 5	130	90 0	144 5	130	90 0	144 5	130	90 0
10	Kara Balta Sugar	35/6	T-1	4 0 (3 2)	280	160	57 1	367	0	0 0	367	0	0 0
11	Ochistnyie Sooruzhenia	35/10	T 2	4 0	220	35	15 9	220	55	25 0	220	60	27 3
12	Melkombinat	35/10	T 1	4 0	220	115	52 3	220	125	56 8	220	120	54 6
13	Budenovka	35/10	T 1	4 0	220	20	9 1	220	25	11 4	220	25	11 4
			T 2	6 3 (2 5)	330	28	8 5	330	6	1 8	330	10	3 0

Notes
1 Current rating column shows the continuous rating of the secondary side of the transformer
2 The actual loadings were recorded on 12/21/88, 12/20/89, 12/19/90 12/19/91, 12/17/92 and 12/15/93
3 Novo-Nikolaevka 1 6 MVA transformer was replaced with a 4 0 MVA transformer in 1990
4 Alekseevka 4 0 MVA transformers were replaced with 6 3 MVA transformers in 1993
5 Kara Balta Sugar 3 2 MVA transformer was used during Winter 1988/89
6 Budenovka 6 3 MVA transformer was replaced with a 2 5 MVA transformer in 1993

Table 4 8 4 3

CHU ELECTRIC COMPANY
Kalinin Area Substation Historical Transformer Loading
Winter 1988-1993
Page 2 of 2

No	Station Name	Voltage Transformer (kV)	Designation	Capacity (MVA)	Current Rating (Amps)	12/1991 Measured Loading (Amps)	12/1991 Loading/ Rating (%)	Current Rating (Amps)	12/1992 Measured Loading (Amps)	12/1992 Loading/ Rating (%)	Current Rating (Amps)	12/1993 Measured Loading (Amps)	12/1993 Loading/ Rating (%)
1	Alekseevka	35/10	T 1	4 0 (6 3)	220	215	97 7	220	190	86 4	330	240	72 7
			T 2	4 0 (6 3)	220	180	81 8	220	225	102 3	330	230	69 7
2	Sosnovka	35/10	T 1	4 0	220	125	56 8	220	98	44 6	220	130	59 1
3	Tuia-Ashu South	35/10	T-1	1 8	165	55	33.3	165		0 0	165		0 0
4	Tuia-Ashu North	35/10	T-1	4 0	220	45	20.5	220	85	38 6	220	50	22 7
5	Kalininskaia	35/10	T-1	10 0	550	255	46 4	550	250	45 5	550	250	45 5
			T-2	10 0	550	300	54 6	550	420	76 4	550	500	90 9
6	Novo-Nikolaevka	35/10	T 1	1 6 (4 0)	220	80	36 4	220	90	40 9	220	120	54 6
7	Stavropolovka	35/10	T 1	4 0	220	70	31 8	220	75	34 1	220	130	59 1
			T 2	4 0	220	40	18 2	220	25	11 4	220	50	22 7
8	Kyzyl-Oktiabr	35/10	T 1	2 5	137 5	35	25 5	137 5	40	29 1	137 5	20	14 6
9	Turuk	35/0 4	T 1	0 1	144 5	70	48 4	144 5	70	48 4	144 5	125	86 5
10	Kara Balta Sugar	35/6	T 1	4 0 (3 2)	367	100	27 3	367		0 0	367	60	16 4
11	Ochistnyie Sooruzhenia	35/10	T 2	4 0	220	60	27 3	220	75	34 1	220	180	81 8
12	Melkombinat	35/10	T 1	4 0	220	110	50 0	220		0 0	220	120	54 6
13	Budenovka	35/10	T 1	4 0	220	25	11 4	220		0 0	220	80	36 4
			T 2	6 3 (2 5)	330	15	4 6	330	100	30 3	137 5	0	0 0

Notes
1 Current rating column shows the continuous rating of the secondary side of the transformer
2 The actual loadings were recorded on 12/21/88, 12/20/89, 12/19/90, 12/19/91 12/17/92, and 12/15/93
3 Novo-Nikolaevka 1 6 MVA transformer was replaced with a 4 0 MVA transformer in 1990
4 Alekseevka 4 0 MVA transformers were replaced with 6.3 MVA transformers in 1993
5 Kara Balta Sugar 3 2 MVA transformer was used during Winter 1988/89
6 Budenovka 6.3 MVA transformer was replaced with a 2 5 MVA transformer in 1993

Table 4 8 4 4

CHU ELECTRIC COMPANY
Kalinin Area Substation Historical Transformer Loading
Summer 1988-1994
Page 1 of 3

No	Station Name	Voltage Transformer (kV)	Designation	Capacity (MVA)	Current Rating (Amps)	6/1988 Measured Loading (Amps)	6/1988 Loading/ Rating (%)	Current Rating (Amps)	6/1989 Measured Loading (Amps)	6/1989 Loading/ Rating (%)
1	Alekseevka	35/10	T 1	4 0 (6 3)	220	35	15 9	220	140	63 6
			T-2	4 0 (6 3)	220	75	34 1	220	220	100 0
2	Sosnovka	35/10	T-1	4 0	220	90	40 9	220	95	43 2
3	Tuta-Ashu South	35/10	T-1	1 8	165	20	12 1	165	25	15 2
4	Tuta Ashu North	35/10	T-1	4 0	220	10	4 6	220	15	6 8
5	Kalininskaia	35/10	T-1	10 0	550	190	34 6	550	110	20 0
			T-2	10 0	550	290	52 7	550	260	47 3
6	Novo-Nikolaevka	35/10	T-1	1 6 (4 0)	84	45	53 6	84	50	59 5
7	Stavropolovka	35/10	T 1	4 0	220	0	0 0	220	85	38 6
			T 2	4 0	220	100	45 5	220	30	13 6
8	Kyzyl-Oktiabr	35/10	T-1	2 5	137 5	40	29 1	137 5	27	19 6
9	Turuk	35/0 4	T 1	0 1	144 5	70	48 4	144 5	75	51 9
10	Kara Balta Sugar	35/6	T 1	4 0	367	300	81 7	367	0	0 0
11	Ochistnyie Sooruzhenia	35/10	T-2	4 0	220	20	9 1	220	50	22 7
12	Melkombinat	35/10	T-1	4 0	220	110	50 0	220	120	54 6
13	Budenovka	35/10	T 1	4 0	220	10	4 6	220	25	11 4
			T 2	6 3 (2 5)	330	20	6 1	330	15	4 6

Notes:
1 Current rating column shows the continuous rating of the secondary side of the transformer
2 The actual loadings were recorded on 6/16/88, 6/21/89, 6/20/90, 6/19/91, 6/23/92, 6/23/93, and 6/15/94
3 Novo-Nikolaevka 1 6 MVA transformer was replaced with a 4 0 MVA transformer in 1990
4 Alekseevka 4 0 MVA transformers were replaced with 6.3 MVA transformers in 1993
5 Budenovka 6 3 MVA transformer was replaced with a 2 5 MVA transformer in 1993

Table 4 8 4 4

CHU ELECTRIC COMPANY
Kalinin Area Substation Historical Transformer Loading
Summer 1988 1994
Page 2 of 3

No	Station Name	Voltage Transformer (kV)	Designation	Capacity (MVA)	Current Rating (Amps)	6/1990 Measured Loading (Amps)	6/1990 Loading/ Rating (%)	Current Rating (Amps)	6/1991 Measured Loading (Amps)	6/1991 Loading/ Rating (%)	Current Rating (Amps)	6/1992 Measured Loading (Amps)	6/1992 Loading/ Rating (%)
1	Alekseevka	35/10	T-1	4 0 (6 3)	220	135	61 4	220	200	90 9	220	100	45 5
			T-2	4 0 (6 3)	220	210	95 5	220	200	90 9	220	100	45 5
2	Sosnovka	35/10	T-1	4 0	220	100	45 5	220	90	40 9	220	90	40 9
				4 0	220	0	0 0	220	0	0 0	220	0	0 0
3	Tuia Ashu South	35/10	T-1	1 8	165	42	25 5	165	40	24 2	165	50	30 3
4	Tuia Ashu North	35/10	T-1	4 0	220	35	15 9	220	35	15 9	220	50	22 7
5	Kalininskaia	35/10	T-1	10 0	550	200	36 4	550	200	36 4	550	170	30 9
			T-2	10 0	550	215	39 1	550	200	36 4	550	185	33 6
6	Novo-Nikolaevka	35/10	T-1	1 6 (4 0)	220	45	20 5	220	90	40 9	220	30	13 6
7	Stavropolovka	35/10	T 1	4 0	220	70	31 8	220	40	18 2	220	35	15 9
			T 2	4 0	220	0	0 0	220	20	9 1	220	0	0 0
8	Kyzyl-Oktiabr	35/10	T-1	2 5	137 5	35	25 5	137 5	35	25 5	137 5	30	21 8
9	Turuk	35/0 4	T-1	0 1	144 5	70	48 4	144 5	70	48 4	144 5	70	48 4
10	Kara Balta Sugar	35/6	T-1	4 0	367	0	0 0	367	100	27 3	367	130	35 4
11	Ochistnyie Sooruzhenia	35/10	T 2	4 0	220	50	22 7	220	60	27 3	220	60	27 3
12	Melkombinat	35/10	T-1	4 0	220	190	86 4	220	100	45 5	220	125	56 8
13	Budenovka	35/10	T 1	4 0	220	10	4 6	220	80	36 4	220	0	0 0
			T 2	6 3 (2 5)	330	15	4 6	330	5	1 5	330	100	30 3

Notes
1 Current rating column shows the continuous rating of the secondary side of the transformer
2 The actual loadings were recorded on 6/16/88, 6/21/89, 6/20/90, 6/19/91, 6/23/92, 6/23/93, and 6/15/94
3 Novo-Nikolaevka 1 6 MVA transformer was replaced with a 4 0 MVA transformer in 1990
4 Alekseevka 4 0 MVA transformers were replaced with 6 3 MVA transformers in 1993
5 Budenovka 6 3 MVA transformer was replaced with a 2 5 MVA transformer in 1993

Table 4 8 4 4

CHU ELECTRIC COMPANY
Kalinin Area Substation Historical Transformer Loading
Summer 1988 1994
Page 3 of 3

No	Station Name	Voltage Transformer (kV)	Designation	Capacity (MVA)	Current Rating (Amps)	6/1993 Measured Loading (Amps)	6/1993 Loading/ Rating (%)	Current Rating (Amps)	6/1994 Measured Loading (Amps)	6/1994 Loading/ Rating (%)
1	Alekseevka	35/10	T 1	4 0 (6 3)	330	125	37 9	330	80	24 2
			T-2	4 0 (6 3)	220	95	43 2	330	100	30 3
2	Sosnovka	35/10	T 1	4 0	220	40	18 2	220	82	37 3
			T-2	4 0	220	55	25 0	220	20	9 1
3	Tuia Ashu South	35/10	T-1	1 8	165	0	0 0	165	0	0 0
4	Tuia-Ashu North	35/10	T-1	4 0	220	28	12 7	220	30	13 6
5	Kalininskaia	35/10	T-1	10 0	550	150	27 3	550	60	10 9
			T-2	10 0	550	230	41 8	550	250	45 5
6	Novo-Nikolaevka	35/10	T 1	1 6 (4 0)	220	50	22 7	220	50	22 7
7	Stavropolovka	35/10	T 1	4 0	220	40	18 2	220	50	22 7
			T-2	4 0	220	40	18 2	220	30	13 6
8	Kyzyl-Oktiabr	35/10	T 1	2 5	137 5	15	10 9	137 5	15	10 9
9	Turuk	35/0 4	T 1	0 1	144 5	52	36 0	144 5	70	48 4
10	Kara Balta Sugar	35/6	T 1	4 0	367	210	57 2	367	20	5 5
11	Ochistnyie Sooruzhenia	35/10	T 2	4 0	220	60	27 3	220	40	18 2
12	Melkombinat	35/10	T-1	4 0	220	110	50 0	220	90	40 9
13	Budenovka	35/10	T 1	4 0	220	20	9 1	220	50	22 7
			T 2	6 3 (2 5)	330	0	0 0	137 5	5	3 6

Notes
1 Current rating column shows the continuous rating of the secondary side of the transformer
2 The actual loadings were recorded on 6/16/88, 6/21/89, 6/20/90, 6/19/91, 6/23/92, 6/23/93, and 6/15/94
3 Novo-Nikolaevka 1 6 MVA transformer was replaced with a 4 0 MVA transformer in 1990
4 Alekseevka 4 0 MVA transformers were replaced with 6 3 MVA transformers in 1993
5 Budenovka 6 3 MVA transformer was replaced with a 2 5 MVA transformer in 1993

4.8.5 Assessment of Operation of Transmission and Distribution Facilities -- Future Conditions

Kalinin Area Load Forecast

The forecast of the loads in the Kalinin area was predicted on two assumptions regarding the future evolution of the Kalinin area electric demands One forecast reflects the assumption that residential use of electricity for heating will increase rapidly as fuel shortages limit the availability of alternative heating sources The other load forecast reflects the gradual recovery of the economy and less substitution of electric heat by residential customers Table 4 8 5 1 provides a summary of the load forecast for three planning horizons 1997, 2000 and 2005 The detailed disaggregation of these forecasts is provided in Appendix C

Table 4 8 5 1

Kalinin Area
Winter Peak Load Forecast

	Load Forecast (MW)		
Winter Period	Expected	Maximum	Difference
1997/1998	32	71	39
2000/2001	37	97	60
2005/2006	59	138	79

Average Annual Growth
Expected Load Growth7 9%
Maximum Load Growth8 7%

Transmission System Performance -- 1997 Expected Peak Load Conditions

Under this scenario, with an expected peak load of 32 MW for the Kalinin area, no overloads were found to exist on the system under base conditions Several new 35/10 kV substations were assumed to be added to the system to support new areas of load growth These stations include Ak-Bashat, Poltavka, Stepnaia, and Teplovaia If not for the addition of these substations, it can be expected that existing 35/10 kV transformers will be overloaded or nearly overloaded under peak load conditions It is, however, very difficult to judge how fast new areas of load will develop because of the very sporadic construction patterns The need for these new substations may or may not arise by 1997 because of the close linkage with new construction

Transmission System Performance -- 2000 Expected Peak Load Conditions

By the year 2000, it is expected that the Kalinin area load will have grown to 37 MW under peak conditions Power flow analyses under this load level shows that one of the power supplies to the Kalinin area 35 kV network -- the Kara-Balta Thermal Electric Station (TES) 110/35/10 kV transformer #1 -- is loaded to 110% of its capability under base case conditions This overload indicates the time in which an additional source to the Kalinin 35 kV network is needed This additional source is the Pobeda 110/35/10 kV substation This substation, having two 10 MVA transformers, will be able to supply power to the 35 kV network serving Ak-Bashat, Poltavka, Novo-Nikolaevka, Teplovaia, and Kalininskaia substations An additional 35/10 kV substation, Eriktuu, will also be needed to serve new load areas by the 2000 time period

Transmission System Performance -- 2005 Expected Peak Load Conditions

For the year 2005, the expected peak load for the Kalinin area is 59 MW Power system simulations at this load level indicate that several facilities will be overloaded These overloaded facilities are shown in Table 4 8 5 2

Table 4 8 5 2

Kalinin Area Overloaded Facilities
2005 Winter Expected Peak Conditions

Facility	Actual Loading (MVA)	Admissible Loading (MVA)	Percent of Admissible (%)
Kara-Balta TES 110/35/10 kV Transformer #1	34 1	20 0	171
Kara-Balta TES 110/35/10 kV Transformer #2	29 1	20 0	146
Sosnovka 35/10 kV Transformer #1	4 2	4 0	105
Sosnovka 35/10 kV Transformer #2	4 2	4 0	105
Novo-Nikolaevka 35/10 kV Transformer #1	7 8	4 0	195

To relieve these overloaded facilities, it is recommended that the Sosnovka 35/10 kV substation be replaced with a 110/35/10 kV substation This substation will relieve the overloads on the two Kara-Balta TES 110/35/10 kV transformers and replace the two 4 0 MVA Sosnovka 35/10 kV transformers with larger units, allowing the Sosnovka 4 0 MVA transformers to be used as spares elsewhere in the system In order to relieve the overload on the Novo-Nikolaevka

354

35/10 kV transformer #1, it is recommended that a 10 MVA, 35/10 kV transformer be added at the station as transformer #2

Transmission System Performance -- 1997, 2000, and 2005 Maximum Peak Load Conditions

Under widespread electric resistive heating conditions, the Kalinin area will reach a maximum peak load of 71, 97, and 138 MW for the 1997, 2000, and 2005 winter periods, respectively In attempting to achieve a power flow model for these load levels major difficulties were encountered, indicating the potential for power system instability at these load levels with the existing power system facilities in the Kalinin area Maximum peak load levels for Kalinin in 1997 are more than twice the present load of the area By year 2000 the load is more than triple and by 2005 the load is quadruple present peak load This rate of load growth is more than the existing system can handle The reinforcements required to supply the maximum load in 1997 would include all the reinforcements identified for 1997, 2000, and 2005 expected peak load conditions, and more It is estimated that another one or two 110/35/10 kV substations and two to four more 35/10 kV substations could be needed to handle the added load for the winter of 1997 By the year 2005, an additional 220/110 kV source will be needed in the Kalinin area to accommodate the maximum load forecast peak of 138 MW As a practical matter, the power system cannot be reinforced to the extent necessary by 1997 to provide the amount of electricity needed for widespread electric resistance heating It is therefore recommended, at least for the near future term, that the widespread use of electric resistance heating in the Kalinin area be discouraged and that people continue to use wood and coal for heating until such time that the power system can be properly upgraded

Distribution System Performance

The load forecast for the Kalinin area, as shown in Table 4 8 5 3, indicates that scattered areas could become overloaded during the Winter by the year 2005 A change in operating voltage from 10 kV to 35 kV is not necessary, provided spare circuit positions exist in most stations, or that reconductoring to 95 mm^2 sized conductors can be accomplished on existing circuits An estimated 184 km of existing 10 kV overhead lines are in need of being refurbished Also 55% of the 0 4 kV system is in need of repair

Provided reinforcement of existing facilities can take place in a timely manner, adequate circuit design and voltage control will provide more reliable and needed energy in the foreseeable future

4 9 Proposed Kalinin Area Transmission and Distribution System Reinforcement Project

The proposed transmission and distribution system reinforcements for the Kalinin area, identified in future power system studies described in Section 4 8 5, are outlined in the following three sections The first, section 4 9 1, will give a description of each reinforcement, followed by a cost estimate of the reinforcement in section 4 9 2 Section 4 9 3 will assign a priority level to each reinforcement

355

Table 4 8 5 3

Kalinin Area
Estimated Distribution Circuit
Loading for Future Load Forecasts

Station	Size # MVA	Estimated Loading (MVA) 1997 Max	1997 Nor	2000 Max	2000 Nor	2005 Max	2005 Nor	Number Circuits 10 kV	Estimated Circuit Loading (MVA) 1997 Max	1997 Nor	2000 Max	2000 Nor	2005 Max	2005 Nor
Budenovka	2-25	4 1	3 3	4 3	1 9	4 9	2 1	8	0 5	0 4	0 5	0 2	0 6	0 3
Kyzyl-Oktiabr	1-2 5	1 9	1 1	2 9	1 6	3 8	2 1	3	0 6	0 4	1 0	0 5	1 3	0 7
Ochistynie Sooruzhenia	1-4	0 9	0 5	1 3	0 7	1 8	0 9	7	0 1	0 1	0 2	0 1	0 3	0 1
Stavropolovka	2-4	3 7	1 4	5 5	2 0	7 4	2 7	7	0 5	0 2	0 8	0 3	1 0	0 4
Kalininskaia	2-16	13 3	6 8	13 3	6 8	13 3	6 8	31	0 4	0 2	0 4	0 2	0 4	0 2
Sosnovka	2-4	3 0	0 5	4 5	0 8	14 0	7 6	6	0 5	0 1	0 8	0 1	2 3	1 3
Alekseevka	2-6 3	5 5	3 2	7 3	3 7	9 1	4 3	7	0 8	0 5	1 0	0 5	1 3	0 6
Novo-Nikolaevka	1-4	3 0	1 0	5 0	1 5	11 5	6 9	2	1 5	0 5	2 5	0 8	5 8	3 5
Kosh-Tegerman		0 5	0 1	0 9	0 1	1 2	0 1	5	0 1	0 1	0 1	0 1	0 2	0 1

4.9.1 Description of Proposed Reinforcement Program

Transmission System

Table 4 9 1 1 shows the reinforcements necessary for the 1997, 2000, and 2005 time periods

Table 4 9 1 1

Kalinin Area Proposed Reinforcement Program

Facility	Recommendation
1997	
Ak-Bashat 35/10 kV Substation	Needed to serve new load areas
Poltavka 35/10 kV Substation	Needed to serve new load areas
Stepnaia 35/10 kV Substation	Needed to serve new load areas
Teplovaia 35/10 kV Substation	Needed to serve new load areas
2000	
Pobeda 110/35/10 kV Substation	Needed to provide another source to the 35 kV network
Eriktuu 35/10 kV Substation	Needed to serve new load areas
2005	
Sosnovka 110/35/10 kV Substation	Needed to provide another source to the 35 kV network
Novo-Nikolaevka 35/10 kV Transformer #2	Needed to serve increased load

Transmission System -- 1997 Winter

By the 1997 time period, four new 35/10 kV substations will be needed to serve new load areas These substations include Teplovaia, Stepnaia, Poltavka, and Ak-Bashat The Teplovaia substation will be tapped off of the existing Kalininskaia - Petrovka 35 kV line, west of the Novo-Nikolaevka substation, by 1 5 kilometers of overhead 35 kV conductor The Teplovaia substation will have two 6 3 MVA, 35/10 kV transformers to feed the distribution system

The Stepnaia substation will be connected through 13 kilometers of 35 kV overhead conductor to the Besh-Terek substation The Stepnaia substation will utilize two 4 0 MVA, 35/10 kV transformers

The Poltavka substation will also tap the existing Kalininskaia - Petrovka 35 kV line, east of the Novo-Nikolaevka substation, using 2 5 kilometers of overhead 35 kV conductor The Poltavka substation will have two 6 3 MVA, 35/10 kV transformers The Ak-Bashat substation will

351

connect to the Poltavka substation with 5 0 kilometers of overhead 35 kV conductor and have two 4 0 MVA, 35/10 kV transformers

Figures D-10 and D-14 show the transmission system diagram and one-line map, respectively, for the 1997 time period

Transmission System -- 2000 Winter

For the 2000 Winter period, two more substations will be needed in the Kalinin area These are the Pobeda 110/35/10 kV and Eriktuu 35/10 kV substations The Pobeda substation will be tapped off the existing Kara-Balta - Kara-Balta TES and Kara-Balta - Kainda 110 kV lines using 1 0 and 6 2 kilometers of overhead conductor, respectively The Pobeda substation will have two 10 MVA, 110/35/10 kV transformers Two 4 0 kilometer, 35 kV lines from Pobeda will connect with the Ak-Bashat substation and one 7 0 kilometer, 35 kV line will help integrate the Eriktuu substation The Eriktuu substation will also tap the existing Budenovka-Kainda 35 kV line using 2 0 kilometers of overhead conductor The Eriktuu substation will have two 2 5 MVA, 35/10 kV transformers

Figures D-11 and D-15 show the transmission system diagram and one-line map, respectively, for the 2000 time period

Transmission System -- 2005 Winter

The 2005 Winter period calls for the addition of a 110/35/10 kV substation at Sosnovka, which will replace the existing 35/10 kV Sosnovka substation The new Sosnovka substation will be integrated by 14 0 kilometers of 110 kV overhead conductor from the Kara-Balta TES substation The 35 kV connections at Sosnovka will remain as they currently exist, with the addition of one other 35 kV line to Telmana The Sosnovka substation will have two 16 MVA, 110/35/10 kV transformers Also required by the 2005 Winter period is the addition of a 10 MVA, 35/10 kV transformer at the Novo-Nikolaevka substation

Figures D-12 and D-16 show the transmission system diagram and one-line map, respectively, for the 2005 time period

Distribution System

In order to provide for future growth, 184 km of existing 10 kV overhead lines are needing reinforcement These improvements range from reconductoring with larger conductors, to providing overhead structure reinforcement such that heavier conductors can be supported when loading increases as projected

It will be necessary to increase conductor sizes installed at 0 4 kV in order to handle new electrical loads or add additional transformers and split the 0 4 kV loads more often Where facilities for cooking and heating can be provided on a separate load panel, it should be accomplished, in order to avoid internal house wiring changes in existing electrical circuits Approximately 200 km of 0 4 kV requiring some form of improvement is needed

352

For the rural areas, such as Kalinin, reinforcement of existing facilities either by reconductoring or adding additional circuits is recommended Requirements can be met by improvements to the overhead system and balancing circuit loading through the year 2005

4.9.2 Capital Cost Estimates of Proposed Reinforcement Program

Transmission System

The cost estimates for the proposed transmission system reinforcements identified in Section 4 9 1 are shown in Table 4 9 2 1

Table 4 9 2 1

Kalinin Area Reinforcement Cost Estimates

Facility	Cost Estimate (Thousands of 1995 US $)		
	Material	Labor	Total
1997			
Ak-Bashat 35/10 kV Substation	265	104	369
Poltavka 35/10 kV Substation	490	194	684
Stepnaia 35/10 kV Substation	655	260	915
Teplovaia 35/10 kV Substation	310	122	432
2000			
Pobeda 110/35/10 kV Substation	1644	352	1996
Eriktuu 35/10 kV Substation	535	212	747
2005			
Sosnovka 110/35/10 kV Substation	2212	528	2740
Novo-Nikolaevka 35/10 kV Transformer #2	70	4	74

Distribution System

In order to improve the 10 kV System, a cost associated with this reinforcement program is estimated at $3,542,000, ($19,250/km) An estimated $3,850,000 ($19,250/km) to refurbish the 0 4 kV system is necessary An additional amount of money is needed to improve 122 substations in order to cover increasing loads At a cost of $5,000 per unit, an approximate cost of $610,000 is needed for this upgrade

Cost Estimates
Kalinin Region
Overhead Distribution 10 kV System

	Material	Labor	Total
Refurbish 10 kV overhead lines (184 km)	$1,842	$1,700	$3,542
Refurbish 0 4 kV System	2,002	1,848	3,850
Recondition 122 Substations OH	366	244	610

4.9.3 Priority of Proposed Reinforcement Program

As described in Section 4 9 3, priorities of the proposed reinforcement program will be classified into one of three designations Priority I is the highest priority and has the most urgent need Priority II is the middle priority level and a less urgent need than Priority I Priority III is the lowest priority with the correspondingly least urgent need Table 4 9 3 1 shows the priority of the proposed Kalinin area reinforcements for 1997, 2000, and 2005

Table 4 9 3 1

Kalinin Area Priority of Proposed Reinforcement Program

Facility	Priority
1997	
Ak-Bashat 35/10 kV substation	III
Poltavka 35/10 kV substation	III
Stepnaia 35/10 kV substation	III
Teplovaia 35/10 kV substation	III
2000	
Pobeda 110/35/10 kV substation	I
Eriktuu 35/10 kV substation	III
2005	
Sosnovka 110/35/10 kV substation	I
Novo-Nikolaevka 35/10 kV transformer #2	II

Transmission System – 1997 Winter

The facilities for this time period are all needed to support new areas of load growth, which is highly variable because of sporadic construction patterns, as stated previously It is therefore very difficult to predict the timing for which the substation is needed Another issue is that since these substations are needed for new areas of load growth, the cost for the substations could be subsidized by the individuals responsible for the new load That is, the new customers in an area can help purchase the 35/10 kV transformer and distribution facilities and let the

260

power company install, maintain and operate the new facilities Because of these factors, the Ak-Bashat, Poltavka, Stepnaia, and Teplovaia 35/10 kV substations are all assigned a Priority III level

Transmission System -- 2000 Winter

The Pobeda 110/35/10 kV substation was found to be needed by this time period This facility will provide an additional source to the 35 kV network in Kalinin and relieve overloading and heavy loadings on existing facilities The Pobeda substation is deemed to, therefore, have a Priority I level of importance The other facility scheduled for service by 2000 is the Eriktuu 35/10 kV substation, which is required for a new area of load growth For the same reasons as the 1997 substations, the Eriktuu substation is given a Priority III level rating

Transmission System -- 2005 Winter

The Sosnovka 110/35/10 kV substation was determined to be necessary for the 2005 Winter period The Sosnovka substation provides similar functions as that of the previously described Pobeda substation, except for a different area of Kalinin The Sosnovka substation will relieve overloads on existing facilities and provide an additional source to the 35 kV network, earning a Priority I level rating

Also necessary for this period is an additional 35/10 kV transformer at Novo-Nikolaevka, which is given a Priority II level of importance This transformer will relieve expected overloads of the existing transformer at Novo-Nikolaevka, but is driven by load growth which may or may not materialize

Distribution System

The first priority is to reinforce pole structures to handle larger conductors Replacement of secondary circuits should be accomplished after new 10 kV circuits are established or improved

4.9.4 Proposed Schedule of the Distribution Reinforcement Program

For Distribution, make the reinforcement a single year effort for 1996, as loading for 1997 may reflect overloading on several area circuits

4.10 Assessment of Operation of Kalinin Area Transmission and Distribution System Following Reinforcement

Transmission System

Following implementation of the above mentioned reinforcements, the Kalinin area should be able to support approximately 60 MW of load -- or roughly twice as much as the present peak load level The Kalinin area is still susceptible, however, to overloaded conditions at peak load if critical facilities were to be out of service Critical facilities include the Kara-Balta 220/110 kV transformers and the 110/35 kV substations supplying the 35 kV network in the

361

Kalinin area On a more localized basis, an outage of a 35/10 kV transformer could cause an overload on a parallel transformer or an outage of the distribution customers that the transformer provides power for

Distribution System

The Kalinin Area will continue to provide electrical energy needs through the year 2005, without overloading the majority of circuits

4 10 1 Expected Benefits from Implementation of Proposed Reinforcement Program

The benefits of the proposed improvements are derived from allowing the load in the Kalinin area to double in size while improving the level of reliability available at the present time The Kalinin area will have more 110/35 kV substations to supply the subtransmission network, making each substation less critical in the event of an outage during winter peak conditions The Kalinin area should be capable of supporting approximately 60 MW of load following these improvements, compared to the 30 MW of existing load

More people will be able to utilize electricity for cooking and heating, when no other alternative is viable More small commercial operations will be able to be started, helping the economy move towards one that is more market-based The additional capacity will also allow existing industries to expand and perhaps a few small industries to open, but there is not enough capacity for new large industrial customers For the distribution portion, improved voltage control and higher circuit ampacity will aid in carrying expected loads

4 11 Extrapolation of Findings to Other Areas of Kyrgyzstan Transmission and Distribution Systems

The results from the analyses of the city of Bishkek and the Kalinin rural area systems were extrapolated to other areas of the Kyrgyz Republic The extrapolation of both transmission and distribution system data for projections fitting the entire country required additional census data identifying growth and populated areas Also, existing power system planning reports, related load forecast data and detailed discussions with KNEHC personnel were used to extrapolate the results to other areas of Kyrgyzstan

4 11 1 Northern Kyrgyzstan

In addition to the Bishkek and Chu Electric Companies, the Northern region of Kyrgyzstan is comprised of Kemin, Naryn, Issyk-Kul and Talas Electric Companies In January 1995, the peak demand for the Northern districts was 1438 MW The Bishkek and Chu electric systems had a combined January 1995 peak demand of 767 MW, or 53 percent of the total for the Northern region The remaining districts had a combined peak demand of 671 MW or 47 percent of the total January 1995 peak demand

Between 1991 and 1995, January peak demand grew at an average annual rate of 8 1 percent During this same period, the Bishkek system experienced a 3 7 percent growth rate and the Chu system experienced a 4 8 percent growth rate The remaining districts of Northern Kyrgyzstan experienced a combined 11 4 percent average annual growth rate in the January peak

Transmission System

The Northern region of Kyrgyzstan is highly dependent on the transmission system to meet its electric power requirements The main source of power supply to the Northern region is the Frunzenskaia 500/220 kV substation, which is connected to the main hydroelectric complexes in the Southern region by the 500 kV line from Toktogul A secondary source of power supply is provided through the 220 kV interconnections with Kazakhstan

The transmission system of the Northern region of Kyrgyzstan is connected to the main Central Asian grid through Toktogul-Frunzenskaia 500 kV, Frunzenskaia-Dzhambul 500 kV, Dzhambul-Glavnaia 220 kV and the LDF-Dzhambul-Frunzenskaia 220 kV transmission lines These lines together form the Kyrgyz and Almaty Energy System section of the Central Asian grid The operation of the Central Asian Unified Power System together with the component systems is characterized by the permissible nodal transfer capabilities The transfer capabilities are based on both the maximum thermal rating of the individual conductors and steady state stability limits For the Kyrgyz and Almaty section of the grid, the maximum steady state nodal transfer capability from the Unified Energy System is 1250 MW, assuming a 20 percent stability margin Under emergency conditions, the transfer capability can be as high as 1350 MW for not more than 40 minutes The steady state stability limit is due to the voltage performance in the Kyrgyz and Almaty Energy Systems Under contingency conditions, the maximum nodal transfer capability is significantly reduced For example, with the outage of Toktogul-Frunzenskaia 500 kV circuit, maximum steady state nodal transfer capability from the Unified Energy System is reduced to 760 MW The control of the nodal transfers is provided by the supervisory control dispatcher of the Unified Energy System

In the most recent years, the winter peak demand of the transmission dependent Kyrgyz and Almaty Energy Systems have required the use of the total available nodal transfer capability If the future load growth is to be supplied from the transmission grid, it will be necessary to increase the nodal transfer capability One option is to construct a new 500 kV line from the existing Frunzenskaia 500 kV station to a new station in Kemin However, previous studies by the Institute in Tashkent indicate that the maximum steady state nodal transfer capability with the new line in service would only increase to 1500 MW under system normal conditions, an improvement of 250 MW

The thermal capability of the 500 kV line would be approximately 2000 MW This suggests that only about 12 5 percent of the investment could be utilized The 500 kV line would produce other benefits such as reducing the dependence of the Northern region on the operational performance of the Alma Ata energy system and improving, somewhat, the voltage profiles in the Issyk-Kul and Naryn areas Detailed studies would be required to develop and evaluate additional alternatives that could be more cost effective in meeting the growing power requirements of the Northern region

In addition to possible transmission limitations, the Kyrgyz power system is deficient in transformation capacity Table 4 11 1 1 shows the existing bulk transformer capacity that's available to meet the power supply requirements of the Northern region

Table 4 11 1 1

Existing and Projected Transformer MW Capacity
Northern Kyrgyzstan Electric Network

Substation	1995	2000	2005	Notes
500/200 kV				
Frunzenskaia	800	800	800	
Kemin	-	400	800	Proposed substation
TOTAL	800	1200	1600	
220/110 kV				
Kara Balta	200	300	300	
Glavnaia	200	200	200	
Bystrovka	100	200	200	
Issyk-Kulskaia	320	320	320	
Chuiskaia	-	100	200	Proposed substation
Ak-Kyia	-	100	100	Proposed substation
Tamga	-	100	100	Proposed substation
Kara-Kol	-	100	200	Proposed substation
Ala-Archa	-	200	200	Proposed substation
Aspara	-	100	100	Proposed substation
TOTAL	820	1720	1920	

Note Transformer capacity is given in MWs based on 80% of nameplate MVA rating

In January 1995, the Northern system experienced a peak demand of 1438 MW The generation available to the system at the time of the peak demand was approximately 300 MW, mostly from Bishkek TES The remaining 1138 MW of load was supplied from the transmission grid As indicated in Table 4 11 1 1, at the time of the peak demand, the installed 220/110 kV transformer capacity of the Northern region was 820 MW This results in a transformer utilization ratio of approximately 1 39, assuming all facilities were in service at the time of the peak Based on historical load growth patterns and projections about future load growth, it is anticipated that the transformer utilization ratio will increase

This situation would be unacceptable to the operation of the Western power systems Western systems are planned to have a transformer utilization ratio of 0 6 to 0 8, depending on the network configuration and individual transformer capacities To provide adequate reliability and

reduced exposure to transformer overloads, the consultant strongly recommends a plan to reduce the transformer utilization ratio towards a target of 0 6 to 0 8, similar to the Western practice

The high dependence of the Northern region on the transmission system to meet its electric power requirements combined with the geography of Kyrgyzstan has resulted in the development of very long, radial 220 kV and 110 kV transmission lines The combination of long, radial lines, low load power factor, and unavailability of reactive power correction has produced a system with large technical losses and extremely poor voltage regulation, especially in the more remote areas of the Northern region

As indicated early, between 1991 and 1995, January peak demand for the Chu Electric Company grew at an average annual rate of 4 8 percent To meet the transmission system requirements, the addition of new 220/110 kV substations will be required at Ala-Archa and Chuiskaia In addition, the Kyrgyz have proposed to tap the existing Frunzenskaia-Bystrovka 220 kV line at Aspara and construct a new 220/110 kV substation Detailed studies of this proposal were beyond the scope of this work However, this reinforcement would provide additional network supply capacity and support the development of the 110 kV network in the area Table 4 11 1 1 shows the additional transformer capacity anticipated with these proposals

In the Lake Issyk-Kul area, low voltage problems are being experienced on the 220 kV and 110 kV transmission network that supplies the area The network consists of a radial 220 kV transmission line supplying the 110 kV transmission network partially encircling the Issyk-Kul lake Under heavy loading conditions, the receiving end voltage can be as low as 75 percent of rated Recently, the CAMECO Corporation of Canada entered into a joint venture with the Kyrgyz Mining corporation, Kyrgyzaltin, for the ownership and operation of the Kumtor Gold Mine located in the Issyk-Kul region The gold mine is expected to commence full production by early 1997 and its success is dependent upon the timely and reliable supply of electricity for a maximum demand of 35 MW and an annual energy usage of 188 GWH A feasibility study was commissioned jointly by the KNEHC, the Kumtor Operating Company and the World Bank to determine the transmission upgrades required in the Issyk-Kul region to provide reliable and secure supply of electricity to the gold mine The study recommended the construction of a new 220 kV line from Balkychy to Kara Kol In addition, portions of the Tamga - Kara Say 110 kV line are to be refurbished and the Balkychy, Tamga, Kara Kol and Kara Say substations are to be upgraded The transmission system reinforcements are expected to significantly improve the network performance in the Issyk-Kul region The reinforcements will also allow for additional load growth in the area

In addition to meeting the demands of the Kumtor gold mine, the transmission system will be required to support a load that has grown at an average annual rate of 10 5 percent To meet the anticipated demand, the Kyrgyz have proposed the extension of the 220 kV network around the entire Issyk-Kul lake New 220/110 kV substations are proposed for Tamga, Kara-Kol and Ak-Kyia The additional transformer capacity associated with this proposed reinforcement is shown in Table 4 11 1 1 The effectiveness of this proposed reinforcement was not evaluated in this work While it is quite possible that some form of a 220 kV reinforcement, including additional reactive power supply, would be adequate to meet the needs of the Issyk-Kul region,

it is unclear as to the source of power supply and the integration between the supply and the proposed network

Since 1991, the Naryn area of the Northern region has experienced a 16 percent average annual growth rate in the winter peak load In the Naryn area there are two lines operating at 110 kV but were designed for 220 kV operation These lines connect the Naryn area with the Issyk-Kul area The 110 kV transmission in the Naryn area has experienced poor voltage regulation, being as low as 75 kV at the end of the 110 kV line There is a 40 MW hydro plant, Atbashet, in the region and future plans call for a cascade of hydros to be developed having 300-360 MW of capacity

In the Talas area, the electric power requirements are actually supplied directly by the Southern region The 110 kV lines in the Talas area have also experienced poor voltage regulation in the past Consideration has also been given to development of hydro plants, possibly in the Chatkal area of the Southern region, to help support the load and voltages in this area In addition, at one time the Kyrgyz had proposed a 500 kV transmission line from the existing Frunzenskaia 500 kV station to a new 500/110 kV station in the Talas area

The poor voltage regulation should be addressed in the near term through the application of static shunt reactive power compensation Shunt capacitors are a relatively low cost, quick fix to the existing voltage regulation problems If the future load growth is similar to the last five years, additional power supply capability will be required in all areas of the region Traditional options such as additional transmission lines, increased transmission voltage or possibly HVDC may be considered In addition, the possibility of using series capacitors should be considered Long, high impedance transmission lines are ideal candidates for the installation of series capacitors Series capacitor compensation would benefit the transmission system by increasing the power transfer capability of the individual transmission lines and improve the voltage regulation by reducing the voltage drop across the transmission line's series inductive reactance In addition, comparative studies and evaluations of various transmission system alternatives have indicated that the addition of series compensation is typically the lowest cost option

4.11.2 Southern Kyrgyzstan

The Southern region of Kyrgyzstan is served by the Osh and Jalal-Abad Electric Networks As with the Northern region, the Southern region has experienced large increases in electric power requirements over the past five years In January 1995, the Southern region's peak demand was 842 MW Between January 1991 and January 1995, peak demand grew at an average annual rate of 7 1 percent for the Southern region In 1989, a program was started to have people in very remote rural areas use electricity for heating and cooking because other fuels, such as coal and natural gas, were very difficult if not impossible to obtain The transportation infrastructure is in worse condition than the transmission system in these areas There are several areas in Southern Kyrgyzstan, such as the Alai Valley, Chatkal, and the Soviet regions, where the population is located in very remote areas and electricity is the only practical energy source for heating

366

During the summer months, there is no apparent pattern of decreasing summer demand This may reflect that the industrial losses are not as significant in this region of the country and the agricultural demand has not decreased significantly

Transmission System

The Southern and Northern regions of Kyrgyzstan are primarily interconnected by the Toktogul-Frunzenskaia 500 kV transmission line There is a weak 110 kV transmission line that interconnects the Jalal-Abad district with the Naryn district This interconnection is normally open and is used only under emergency conditions to provide local support to the Naryn district In the Southern region, there are four major substations at 220 kV and higher These are Toktogul 500 kV, Uzlovaia 220 kV (Osh), Oktabriskaia 220 kV (Jalal-Abad), and Alai 220 kV An 110 kV network has been developed to supply the local load

The 220 kV system in the Southern region is primarily supplied from the Latchin 500/220 kV substation, which is located in the Uzbekistan Republic and is part of the Central Asian 500 kV ring The 220 kV lines from this substation go to Uzlovaia and Oktabriskaia 220 kV substations Because of this, the Southern region of Kyrgyzstan relies heavily on a facility located in Uzbekistan Although no problems have occurred to date, there are concerns, such as uncertain maintenance practices and future political relations, associated with having this facility located outside of the Kyrgyz Republic Due to the large increase in the winter peak demand over the last five years, the load factor on the 500/220 kV substation is increasing rapidly As a result, expansion of the substation would require load to be disconnected in the area

Two conceptual alternative plans have been suggested by the Kyrgyz as a way to relieve their dependence on Uzbekistan The first involves tapping the Latchin-Toktogul 500 kV transmission line at a point just inside the Kyrgyz border and constructing a new 500/220 kV substation A significant amount of 220 kV transmission would be required to adequately supply the load in the Southern region The second alternative is tied to the completion of the proposed Kambarata hydro complex This plan would involve the construction of a 500 kV transmission line from Kambarata to a new 500 kV substation located near the city of Osh The uncertainty associated with the Kambarata development makes this option extremely unlikely

The Osh combined heat and power plant provides heat to the district heating system for the city of Osh and can also generate a maximum of 50 MW The Osh plant can burn either natural gas or mazut, but has not operated over the most recent year due to lack of fuel The Osh plant was not designed to burn coal, and it cannot be retrofitted because of the lack of available space at the plant to expand As a result, Osh authorities have asked KNEHC to develop a plan which will allow the city of Osh to switch to electricity for heating, cooking, and hot water

The critical loading points in this area are the Uzlovaia and Oktabriskaia 220 kV substations At each of these substations, there are 2-125 MVA, 220/110 kV transformers Because of the fuel situation at the Osh power plant, an increased demand is placed on these transformers and the 110 kV lines into the city of Osh If a critical outage were to occur, loadings on the 110 kV lines into Osh could reach 120-150 percent of rated and overloads would occur on the

220/110 kV transformers The 110 kV lines into Osh are matched to the transformers, so increasing the transformer capacity would not solve this problem

The Lilak and Batken areas are located in the far southwest part of Kyrgyzstan These areas are within the Osh district but the power supply is provided through interconnections with neighboring Central Asian countries The Lilak area, located on the western border, receives power through interconnections with Tadjikistan The Batken area is located to the east of Lilak and receives power through interconnections with Uzbekistan The power supplied to Batken is generated in Uzbekistan by a fossil fuel power plant and is supplied locally through the 110 kV network and by the Latchin-Alai 220 kV transmission line At the Alai 220 kV substation, there is 1-125 MVA, 220/110 kV transformer This transformer is adequate to handle the present and near-term future loads in the area A second transformer can be added at the substation if needed to meet the future load increases Due to the fact that this area is supplied by other countries, there are similar concerns to those mentioned for the Latchin 500/220 kV network supply to the cities of Osh and Jalal-Abad

Conceptual plans have been proposed by the Kyrgyz to reinforce the transmission network in this area The plans call for tapping the existing Latchin-Syr Darya 500 kV transmission line and constructing a new 500/220 kV substation Two new 220 kV interconnections with Uzbekistan would be created to bring the new power supply into Kyrgyzstan The plans also call for the development of a 220 kV network within Kyrgyzstan to fully integrate the power supply into the Kyrgyz network

The Alai Valley area is an extremely remote area located south of the city of Osh This area is fed radially from the city of Osh by an approximately 200 km long, 110 kV transmission line The voltage is stepped down to 35 kV, with an 100 km long line supplying power to the western portion of the valley and a 60 km long line supplying the eastern portion of the valley This radial 110 kV line passes through a mountain range and is susceptible to avalanches in the winter and floods and mudslides in the spring The line carries approximately 35-40 MW of load and experiences very poor voltage regulation

Two conceptual alternative plans have been proposed by the Kyrgyz to improve service to the Alai Valley area The first is to add a second 110 kV transmission source into the area This option would be very difficult due to the long distance and the mountain range the transmission line must cross The second plan is build a small cascade of hydros on a river in the Alai Valley area with an installed spring/summer maximum capacity of 20-30 MW This option is questionable due the likelihood that the generation from the hydros would not be available in the winter, the time of the system peak demand The winter capacity would be approximately 5-10 MW with some capability to provide voltage support

In 1992, the Tashkent Institute performed a study of the Southern region of Kyrgyzstan This study predicted that the use of electric heating would increase in the region and that by the year 2000, the load of the Osh and Jalal-Abad districts would be approximately 1500 MW Based on these assumptions, the study recommended that a large amount of 110 kV network be installed in both districts and to have 110/10 kV transformation at the rural villages to provide for local needs More specifically, the study recommended the following, 600 km of 110 kV

lines, 1000 MVA of 500/220 kV transformer capability, 2300 MVA of 220/110 kV transformer capability, and 1660 MVA of 110/35 and 110/10 kV transformer capability Of all the recommendations made in the Institute's report, nothing has been implemented to date The only reinforcements to the area have been to replace a few transformers with higher capability ones

4.11.3 Subtransmission and Distribution System

Due to the deteriorated level of reliability of the local thermal power supply, cities in both the Northern and Southern regions are depending more heavily on the transmission network to provide their power requirements This not only pushes the transmission system towards its capability limits but also puts increasing stress on the subtransmission and distribution facilities Changing the power supply source also produces changes in the power flow patterns throughout the electric network It is likely that these changes would be unanticipated by the system planners

The analysis of the Bishkek area indicated that under the scenario of rapidly increasing residential demand for electricity, 13 percent of the 110/35/6-10 kV transformers and 11 percent of the 35/6-10 kV transformers are anticipated to be overloaded by 1997 The scenario using the expected average annual growth in winter peak demand would have the overloads occurring in 2005 Similar assumptions can be made for the cities of Osh and Jalal-Abad, especially when it is observed that the annual growth rate is higher in the Southern region and there is shift in population away from the Northern region towards the Southern region

The severity of overloading problem on the subtransmission systems in both the Northern and Southern regions is highlighted in Table 4 11 3 1 The table provides a list, by regional electric company, of transformers that have experienced loadings above 90% of their nameplate rating It is obvious from Table 4 11 3 1 that a program of transformer replacement and/or upgrade should be implemented immediately Continued operation at or over the nameplate rating could significantly shorten the life of the transformers and further deteriorate a bad situation

In the interim, the KNEHC personnel have developed a transformer replacement schedule The replacement schedule is shown in Table 4 11 3 2 The table includes the location and ratings of existing transformers and the replacement location to where the transformers would be relocated if a problem occurred The transformers shown in Table 4 11 3 2 are not spare transformers, but rather transformers that could be moved to locations of more critical need It should be noted that for many situations, a new transformer must be purchased

The main problem in the rural areas of the Southern region is obtaining an adequate and reliable power supply Beyond that, as indicated in Table 4 11 3 1 there is a need to replace obsolete transformers and add new 110/35/6-10 kV transformation capacity Replacement of obsolete transformers should also reduce the reactive power requirements of the transformers thereby improving the overall voltage profile in these remote areas

Identification of specific problems and development of recommendations on how to alleviate the problems is beyond the scope of this work However, based on the analysis of the Northern region, it is anticipated that significant additional transformation capacity will be required,

Table 4 11 3 1

KNEHC Historical Transformer Loadings
Transformers Experiencing Loading Levels
of 90% of Nameplate or Higher
(Page 1 of 4)

No	Substation Name	Voltage kV	Transformer No	Rating MVA	Loading %
	CHU ELECTRIC COMPANY				
1	Frunzenskaia	500/220/10	AT-1	501	100
2	Frunzenskaia	500/200/10	AT-2	501	100
3	Kara-Balta	220/110/10	AT-1	125	124
4	Kara-Balta	220/110/10	AT-2	125	112
5	Ak-Suu	110/35/6	T-1	20	105
6	Ak-Suu	110/35/6	T-2	20	100
7	Berlick	110/35/10	T-1	10	96
8	Zhangi Zher	110/35/10	T-1	10	105
9	Zhangi Zher	110/35/10	T-2	16	100
10	Kainda	110/35/10	T-1	16	100
11	Manas	110/35/10	T-2	16	100
12	Moskovskaia	110/35/10	T-2	6 3	121
13	Novo-Troitskaia	110/35/10	T-1	25	110
14	Novo-Troitskaia	110/35/10	T-2	25	105
15	Kant	110/35/10	T-1	16	116
16	Kant	110/35/10	T-2	16	100
17	Leninskaia	35/10	T-1	4	105
18	Strenikaro	35/10	T-1	3 2	114
19	25 Years of Kyrgyzstan	35/10	T-1	6 3	104
20	25 Years of Kyrgyzstan	35/10	T-2	6 3	111
21	Karla-Marxa	35/10	T-1	2 5	109
22	Maiskaia	35/6	T-1	6 3	90
23	Lux	35/10	T-1	6 3	95
24	Novo-Pokrovka	35/10	T-1	6 3	114
25	Novo-Pokrovka	35/10	T-2	4 0	100
26	Lebedinovka	35/10	T-1	6 3	121
27	Tuz	35/10	T-1	4 0	108
28	Lenina	35/10	T-1	4 0	105
29	Uchkoz	35/10	T-1	4 0	114
30	Zhal	35/10	T-1	4 0	105
31	Belogorka	35/10	T-1	2 5	124
32	Alexandrovka	35/10	T-1	6 3	104
33	Alexandrovka	35/10	T-2	6 3	104
34	V-Antonovka	35/10	T-1	4 0	100
35	V-Antonovka	35/10	T-2	6 3	109
36	Rassvet	35/10	T-1	6 3	102
37	Belovodskaia	35/10	T-2	6 3	90
38	Sretenka	35/10	T-1	2 5	92
39	Sretenka	35/10	T-2	2 5	96
40	Petrovka	35/10	T-1	6 3	97
41	Petrovka	35/10	T-2	6 3	97
42	Molovodinoe	35/10	T-1	4 0	90
43	Alekseevka	35/10	T-1	6 3	109
44	Alekseevka	35/10	T-2	4 0	103
45	Kalininskaia	35/10	T-2	10	115
46	Ochistynie-Sooruzhenaia	35/10	T-1	4 0	114
47	Panfilova	35/10	T-1	6 3	91
48	Panfilova	35/10	T-2	6 3	92
49	Aspara	35/10	T-2	4 0	115

TOTAL - 49

Table 4 11 3 1

KNEHC Historical Transformer Loadings
Transformers Experiencing Loading Levels
of 90% of Nameplate or Higher
(Page 2 of 4)

No	Substation Name	Voltage kV	Transformer No	Rating MVA	Loading %
	BISHKEK ELECTRIC COMPANY				
50	Yuzhnaia	110/35/6	T-2	40	94
51	Centralnaia-1	35/10	T-1	10	97
52	A-Hydro-4	35/10	T-1	3 2	96
TOTAL - 3					
	KEMIN ELECTRIC COMPANY				
53	Ivanovka	110/35/10	T-1	16	100
54	Ivanovka	110/35/10	T-2	25	100
55	Bystrovka Hydro	110/35/6	T-1	15	90
56	Bystrovka Hydro	110/35/6	T-2	15	90
57	Severnaia	35/10	T-1	10	90
TOTAL - 5					
	ISSYK-KUL ELECTRIC COMPANY				
58	Przhevalsk	110/35/6	T-1	25	107
59	Przhevalsk	110/35/6	T-2	20	106
60	Uzhnai	35/10	T-1	10	91
61	Pristan	35/6	T-3	4 0	97
TOTAL - 4					
	NARYN ELECTRIC COMPANY				
62	Naryn-1	110/35/10	T-1	25	104
63	Naryn-1	110/35/10	T-2	25	105
64	Urut	110/35/10	T-1	16	90
65	Zhetigen	110/35/10	T-1	10	105
66	Zhetigen	110/35/10	T-2	10	107
67	Ala-Toho	110/35/10	T-1	10	100
68	Ala-Toho	110/35/10	T-2	10	100
69	Kochkorka	110/10	T-2	6 3	100
70	Kochkorka	110/10	T-3	6 3	100
71	Naryn-2	35/10	T-1	4 0	105
72	Naryn-2	35/10	T-2	4 0	105
73	Uchkhoz	35/10	T-1	1 6	95
74	Pioneer	35/10	T-1	1 6	90
TOTAL - 13					
	TALAS ELECTRIC COMPANY				
75	Talas	110/35/10	T-1	25	100
76	Talas	110/35/10	T-2	16	103
77	Kirovka	110/35/10	T-1	16	99
78	Kirovka	110/35/10	T-2	10	102
79	Pobeda	110/35/10	T-1	10	100
80	Chat-Bazar	110/35/10	T-1	16	100
81	Beisheke	35/10	T-1	3 2	110
82	Kyzyl	35/10	T-1	2 5	110
83	Kyrk-Kyz	35/10	T-1	2 5	110
TOTAL - 9					

Table 4 11 3 1

KNEHC Historical Transformer Loadings
Transformers Experiencing Loading Levels
of 90% of Nameplate or Higher
(Page 3 of 4)

No	Substation Name	Voltage kV	Transformer No	Rating MVA	Loading %
	OSH ELECTRIC COMPANY				
84	Uzlovaia	220/110/10	T-1	125	95
85	Uzlovaia	220/110/10	T-2	125	95
86	Osh-3	35/6	T-1	10	115
87	Osh-4	35/6	T-1	5 6	110
88	Osh-6	110/35/10	T-1	16	90
89	Osh-6	110/35/10	T-2	16	120
90	Tuleiken	110/35/10	T-1	6 3	94
91	Kara-Su	110/35/6	T-1	25	96
92	Uzgen	110/35/10	T-1	16	119
93	Uzgen	110/35/10	T-2	10	100
94	Kara-Kuldga	110/35/10	T-1	16	115
95	Kara-Kuldga	110/35/10	T-2	10	110
96	Karatai	110/35/10	T-1	6 3	
97	Karatai	110/35/10	T-2	10	
98	Kok-Zhar	110/35/10	T-2	10	
99	Gulcha	110/10	T-1	6 3	
100	Daraut Kurgan	35/10	T-1	6 3	
101	Check-Abad	35/10	T-1	4 0	
102	Mangit	110/35/10	T-1	16	
103	Naukat	110/35/10	T-1	10	
104	Kok-Bel	35/10	T-1	4 0	
105	Kyrgyz-Ata	35/10	T-1	4 0	
106	Otuz-Adyr	35/10	T-1	2 5	
107	Otuz-Adyr	35/10	T-2	4 0	
108	Tashirova	110/35/10	T-1	6 3	
109	Kashgar Kishlak	110/35/10	T-2	10	
110	Kyzyl Kia-2	110/35/10	T-2	16	
111	Karavan	35/10	T-1	4 0	
112	Zapadnaia	35/10	T-1	6 3	
113	Salam-Alik	35/10	T-1	2 5	
114	Laitala	35/10	T-1	4 0	
115	Samat	110/35/10	T-1	10	
116	Okhna	35/10	T-1	2 5	
117	Uch-Kurgan	35/10	T-1	4 0	
118	Uch-Kurgan	35/10	T-2	2 5	
119	Ravat	35/10	T-1	1 6	
120	Kara-Bulak	35/10	T-1	2 5	

TOTAL - 37

Table 4 11 3 1

KNEHC Historical Transformer Loadings
Transformers Experiencing Loading Levels
of 90% of Nameplate or Higher
(Page 4 of 4)

No	Substation Name	Voltage kV	Transformer No	Rating MVA	Loading %
	JALAL ABAD ELECTRIC COMPANY				
121	Bazar Kurgan	110/35/10	T-1	16	95
122	Bazar Kurgan	110/35/10	T-2	10	100
123	Izbaskent	110/35/6	T-1	10	97
124	Izbaskent	110/35/6	T-2	15	95
125	Suzak	110/35/10	T-1	25	93
126	Shekaftar	110/35/6	T-1	15	100
127	Sary-Tala	35/10	T-2	4 0	110
138	Jalal-Abad	110/35/10	T-2	10	94
139	Jalal-Abad	35/10	T-3	4 0	115
130	Tash-Bulak	110/35/10	T-1	16	96
131	Karavan	110/35/10	T-1	10	100
132	Karavan	110/35/10	T-2	10	103
133	Dostuk	110/10	T-2	6 3	94
134	Blagove	35/10	T-2	4 0	103
135	Shenka	110/35/10	T-1	10	96
136	Kluchevaia	35/6	T-2	6 3	100
137	Kairma	35/10	T-1	2 5	100
148	Dzerzhinsk	35/10	T-1	1 0	103
149	Ozgorush	35/10	T-1	4 0	105
140	Terek-Suu	35/10	T-1	2 5	95
141	Terek-Suu	35/10	T-2	1 8	100
142	Toluk	35/10	T-1	2 5	96
143	Kyzyl-Tuu	35/10	T-1	1 6	100
144	Karia Marxa	35/10	T-1	2 5	95
145	Promyshlernaia	35/6	T-1	7 5	94
146	Chatyr-Tash	35/10	T-1	4 0	100
147	Beken	35/10	T-2	4 0	95

TOTAL - 27

Total for Kyrgyz Energy Holding - 147 Transformers

Table 4 11 3 2

KNEHC Transformer Replacement Schedule
(Page 1 of 3)

	Transformer		Existing Location		Replacement Location		
No	Voltage (kV)	Capacity (MVA)	Name of Utility	Name of Substation	Name of Utility	Name of Substation	Notes
1	220/110/10	200 0			Chu	Kara Balta	Purchase
2	220/110/10	200 0			Chu	Kara Balta	Purchase
3	110/35/10	63 0			Bishkek	Alamedin	Purchase
4	110/35/10	40 0			Naryn	Naryn-1	Purchase
5	110/35/10	40 0			Naryn	Naryn-1	Purchase
6	110/35/10	40 0			Bishkek	Karagachavaia	Purchase
7	110/35/6	40 0			Issyk Kul	Przhevalskaia	Purchase
8	110/35/6	40 0			Issyk Kul	Przhevalskaia	Purchase
9	110/35/6	40 0			Bishkek	Karagachavaia	Purchase
10	110/35/6	40 0			Bishkek	Novo-Zapadnaia	Purchase
11	110/35/6	40 0			Bishkek	Novo-Zapadnaia	Purchase
12	110/35/6	40 0			Bishkek	Kostromskaia	Purchase
13	110/35/6	40 0			Bishkek	N Vostochnaia	Purchase
14	110/35/6	40 0			Bishkek	N Vostochnaia	Purchase
15	110/35/6	40 0			Bishkek	Promyshlennaia	Purchase
16	110/35/6	40 0			Bishkek	Promyshlennaia	Purchase
17	110/35/10	25 0			Jalal-Abad	Raionnaia	Purchase
18	110/35/10	25 0	Issyk-Kul	Przhevalsk	Issyk-Kul	Vostochnaia	
19	110/35/10	25 0	Issyk-Kul	Przhevalsk	Issyk-Kul	Bosteri	
20	110/35/10	25 0	Naryn	Naryn-1	Chu	Kant	
21	110/35/10	25 0	Naryn	Naryn-1	Chu	Kant	
22	110/35/10	25 0	Bishkek	Karagachavaia	Kemin	Tokmok	
23	110/35/10	25 0	Bishkek	Karagachavaia	Kemin	Tokmok	
24	110/35/10	25 0			Bishkek	Molodogvardeiskaia	Purchase
25	110/35/10	25 0			Osh	Osh-6	Purchase
26	110/10	25 0			Issyk-Kul	Pionerskaia	Purchase
27	110/10	16 0			Issyk-Kul	Ananjevo	Purchase
28	110/10	16 0	Issyk-Kul	Pionerskaia	Issyk-Kul	Cholpon-Ata	
29	110/10	16 0	Bishkek	Molodogvardeiskaia	Issyk-Kul	Cholpon-Ata	
30	110/10	16 0			Naryn	Kochkorka	Purchase
31	110/35/10	16 0	Issyk Kul	Vostochnaia	Issyk-Kul	Pristan	
32	110/35/10	16 0			Issyk-Kul	Pristan	Purchase
33	110/35/10	16 0			Issyk-Kul	Tjup	Purchase
34	110/35/10	16 0	Kemin	Tokmok	Issyk-Kul	Tjup	
35	110/35/10	16 0			Naryn	Ala-Too	Purchase
36	110/35/10	16 0	Chu	Tokmok	Jalal-Abad	Isbaskent	
37	110/35/10	16 0	Jalal-Abad	Raionnaia	Jalal-Abad	Jalal-Abad	
38	110/35/10	16 0	Osh	Osh-6	Osh	Gulcha	
39	110/35/10	16 0	Chu	Kant	Osh	Sary-tash	
40	110/35/10	16 0	Chu	Kant	Osh	Samat	

Table 4 11 3 2

KNEHC Transformer Replacement Schedule
(Page 2 of 3)

	Transformer		Existing Location		Replacement Location		
No	Voltage (kV)	Capacity (MVA)	Name of Utility	Name of Substation	Name of Utility	Name of Substation	Notes
41	110/35/6	16 0	Osh	Kyzyl Kiia-2	Jalal-Abad	Jalal Abad	
42	110/10	10 0	Issyk-Kul	Cholpon-Ata	Issyk-Kul	Chocktal	
43	110/10	10 0	Issyk-Kul	Cholpon-Ata	Issyk-Kul	Jeti Oghuz	
44	110/10	10 0	Issyk-Kul	Pristan	Issyk-Kul	Uhlahol	
45	110/10	10 0	Issyk Kul	Pristan	Issyk-Kul	Ark-Terek	
46	110/10	6 3	Naryn	Kochkorka	Talas	Pokrovka	
47	110/10	6 3	Naryn	Kochkorka	Talas	Pokrovka	
48	35/6	25 0			Bishkek	Centralnaia-2	Purchase
49	35/10	16 0			Issyk-Kul	Severnaia Przh	Purchase
50	35/10	16 0			Issyk-Kul	Severnaia Przh	Purchase
51	35/10	16 0			Chu	Kalininskaia	Purchase
52	35/10	16 0			Chu	Kalininskaia	Purchase
53	35/10	16 0			Kemin	Severnaia	Purchase
54	35/6	16 0			Osh	Osh-3	Purchase
55	35/6	16 0			Osh	Osh-3	Purchase
56	35/6	16 0			Bishkek	Centralnaia-6	Purchase
57	35/6	16 0			Bishkek	Centralnaia-6	Purchase
58	35/6	16 0			Bishkek	Centralnaia-2	Purchase
59	35/6	16 0			Bishkek	Centralnaia-1	Purchase
60	35/6	16 0			Bishkek	Centralnaia-1	Purchase
61	35/10	10 0	Chu	Kalininskaia	Chu	Alexandrovka	
62	35/10	10 0	Chu	Kalininskaia	Chu	Alexandrovka	
63	35/10	10 0	Issyk Kul	Severnaia	Chu	Petrovka	
64	35/10	10 0	Issyk-Kul	Severnaia	Chu	Petrovka	
65	35/10	10 0			Chu	Belovodskaia 2	Purchase
66	35/10	10 0			Chu	Belovodskaia-2	Purchase
67	35/10	10 0			Chu	Novo Pockrovka	Purchase
68	35/10	10 0			Osh	Aravan	Purchase
69	35/10	10 0			Osh	Zapadnaia	Purchase
70	35/10	10 0			Osh	Daraut-Kurghan	Purchase
71	35/10	10 0			Jalal-Abad	Kljuchevaia	Purchase
72	35/10	10 0			Kemin	Uhgozapadnaia	Purchase
73	35/10	10 0			Kemin	Uhgozapadnaia	Purchase
74	35/10	10 0			Kemin	D Baza	Purchase
75	55/6	10 0	Osh	Osh 3	Osh	Osh-1 Tr-1	
76	55/6	10 0	Osh	Osh 3	Osh	Center-1	
77	55/6	6 3			Jalal-Abad	Kokjangak	Purchase
78	55/6	6 3			Issyk-Kul	Pristan	Purchase
79	55/6	6 3	Osh	Osh-1	Chu	Lebedinovka Tr-2	
80	35/10	6 3	Jalal Abad	Iljichovka	Jalal-Abad	Vinsovhoz	

Table 4 11 3 2

KNEHC Transformer Replacement Schedule
(Page 3 of 3)

	Transformer		Existing Location		Replacement Location		
No	Voltage (kV)	Capacity (MVA)	Name of Utility	Name of Substation	Name of Utility	Name of Substation	Notes
81	35/10	6 3			Naryn	Naryn-2	Purchase
82	35/10	6 3			Naryn	Naryn-2	Purchase
83	35/10	6 3			Issyk-Kul	Mihailovka	Purchase
84	35/10	6 3			Issyk-Kul	Mihailovka	Purchase
85	35/10	6 3	Chu	Alexandrovka	Chu	V Antonovka	
86	35/10	6 3	Chu	Petrovka	Chu	Alekseevka	
87	35/10	6 3	Chu	Petrovka	Chu	Alekseevka	
88	35/10	6 3	Chu	Belovodskaia-2	Chu	Lux	
89	35/10	6 3	Chu	Belovodskaia-2	Chu	Lux	
90	35/10	6 3			Chu	Lenina	Purchase
91	35/10	6 3			Chu	Leninskaia	Purchase
92	35/10	6 3	Osh	Daraut Kurgan	Osh	Kygyz-Ata	
93	35/10	6 3			Osh	Kurshab	Purchase
94	35/10	6 3			Osh	Myrza-Ake	Purchase
95	35/10	6 3			Osh	Uch Kurgan	Purchase
96	35/10	6 3			Kemin	Buruldai 2	Purchase
97	35/10	6 3			Kemin	Kashkelen	Purchase
98	35/10	6 3			Kemin	Shamsi	Purchase
99	35/10	4 0	Issyk-Kul	Mihailovka	Issyk-Kul	1 Maia	
100	35/10	4 0	Issyk-Kul	Mihailovka	Talas	Besh Tash	
101	35/10	4 0	Jalal-Abad	Vinsovhoz	Jalal-Abad	Terek-Suu	
102	35/10	4 0	Chu	V Antonovka	Chu	Sretenka	
103	35/10	4 0	Chu	N Pokrovka	Chu	Kara-Dzhigach	
104	35/10	4 0	Chu	Alekseevka	Chu	Kara-Dzhigach	
105	35/10	4 0	Chu	Alekseevka	Chu	N Alarcha	
106	35/10	4 0	Osh	Aravan	Osh	Ohna (Okhna)	
107	35/10	4 0	Osh	Kyrgyz Ata	Jalal-Abad	Chepchema	
108	35/10	4 0	Naryn	Naryn-2	Naryn	At-Bashy	
109	35/10	4 0	Naryn	Naryn-2	Naryn	At-Bashy	
110	35/10	2 5	Issyk-Kul	1 Maia	Naryn	Pioneer	
112	35/10	2 5	Jalal-Abad	Terek-Suu	Jalal Abad	Zhany-Zherek	
113	35/10	2 5	Talas	Besh Tash	Naryn	Ak-Sai	

obsolete transformers will need to be replaced, and the distribution system will need similar levels of reinforcing and upgrading

4.12 Summary of Proposed Transmission and Distribution System Improvement Program

Operation of the power system in Kyrgyzstan has changed significantly in the past few years The changes are in response to the economic restructuring now taking place in the Kyrgyz Republic and neighboring Central Asian Republics The transformations of the economies of the Newly Independent States of the former Soviet Union now underway and the breakdown in former centrally planned economic allocation systems has resulted in the disruption of fuel supplies, electric generation dispatch, and consumer consumption patterns

The material presented in section 4 2 1 provides a good overview of the recent changes experienced in the economy of the Kyrgyz Republic as it responds to this restructuring process Forecasts of future economic recovery and restructuring as projected by different Ministries in the Republic are provided The actual and forecast economic data, together with power system control measurements taken and recorded by the KNEHC in the past few years, provide a foundation upon which assessments and analyses of the performance of the power system can be made

The current fuel supply problems have disrupted the operation of combined heat and power plants and heat only plants in many areas of Kyrgyzstan This disruption has compelled large segments of the population to switch to electric heat since the district heating systems are no longer available or operate reliably The disruptions in the flow of natural gas previously used by some segments of the population for home cooking has similarly forced segments of the population to turn to other sources, including electricity, for home cooking These forces are driving the use of electric energy by the population to much higher levels than contemplated just a few years ago The increase in consumption of electric energy by the general population is largely offset, however, by the reduction in industrial activity in the Republic The changing patterns of consumption have also affected the maximum demand patterns As illustrated in Section 4 2 4, the maximum demand in the winter months has increased substantially in response to the population's movement to the use of electricity for home heating

The actual loadings and loading patterns experienced on the transmission and distribution systems in Kyrgyzstan have changed in the past few years to reflect the changed generation dispatch patterns and consumer uses of electricity Because these changes have occurred suddenly and naturally in response to unplanned events, no power system planning studies are available at the KNEHC which properly model and reflect the new set of conditions confronting the power system in Kyrgyzstan All past studies reflect higher levels of economic activity, industrial production, usual generation dispatch patterns, previously experienced consumption patterns and so forth To properly analyze the transmission system in consideration of the new realities, the consultant and staff of KNEHC undertook the intensive effort to develop a computer model of the power system serving the City of Bishkek and Kalinin area of the Chu Electric Company The power flow model of the transmission system could then be used to simulate the performance of the power system serving those areas for alternative forecasts of

377

future consumer demands Expected and high growth ten year forecasts of electric demand were developed for both areas

Section 4 5 4 and Section 4 8 5 discuss the results of the power flow studies for the City of Bishkek and Kalinin area, respectively The simulation and analyses of the transmission system for the future time periods provided the means to identify unacceptable operating conditions It was apparent from the studies that the transmission system would need to be extensively reinforced to meet the increase in demands expected in each area The scope and cost of the transmission reinforcement programs for the City and the Kalinin area are developed in Sections 4 6 1, 4 6 2, 4 9 1 and 4 9 2 The recommended reinforcement programs were divided into two categories, namely 1) improvements needed to relieve overloaded facilities or to improve bus voltages and, 2) improvements to supply new customers which may or may not materialize depending on economic development and new building construction

The projects were grouped together to reflect their need within the planning horizons of 1997, 2000 and 2005 The cost of the transmission reinforcement projects are also estimated The total estimated cost in 1995 US$ of the transmission improvements required for the City of Bishkek over the next ten years is $85 million The total estimated cost of improvements to the Kalinin area, again in 1995 US$, is $8 million The following tables summarize the proposed transmission system reinforcements and their associated costs

The review of the condition of the underground cable system and the loadings experienced on that system lead to the recommendation that a long-term program to replace and upgrade the underground distribution system is needed The cost of such a program is estimated The underground cable system is twenty to forty years old and has experienced many failures in different cable sections Since the rebuilding of the distribution system is expensive and takes much time to implement, it is the consultants view that the KNEHC should make repairs in the neighborhoods and areas for which they are recovering their costs This would provide an impetus to consumers to pay their electric bill if a link could be established between the quality of service (which could be expected to improve following upgrades and rehabilitation work to the distribution system) and bill payment Furthermore, unlike improvements to the transmission system that are needed to build and preserve the integrity of the system, distribution system improvements have very localized effects Improvements to the 500, 220, 110 and 35 kV transmission system have much more widespread effects It is therefore recommended that improvements to the transmission system take priority to distribution system repairs until such time that the bill collections improve At that time, capital improvements to the distribution system could become self-sustaining

Finally, the results of the detailed transmission and distribution planning studies of the City and Kalinin area provided a basis to estimate the scope of transmission and distribution improvements needed elsewhere in Kyrgyzstan Specific plans to reinforce other areas in the Republic are described in Sections 4 11 1, 4 11 2, and 4 11 3

373

1997 Winter Expected Peak Forecast
List of Overloaded Facilities

Overloaded Facility	Actual Loading (MVA)	Admissible Loading (MVA)	Percent of Admissible (%)	Recommendation	Cost ($000 US)	Priority
Bishkek Area						
Selectro 35/10 kV transformer #2	4 6	4 0	115 00	Add 6 3 MVA transformer	477	I
Selectro 35/0 4 kV transformer #1	4 3	4 0	107 50	Remove transformer	---	I
Selekccionnaia 110/10 kV transformer	18 9	16 0	118 13	Add second 16 MVA transformer	1330	I
Teplichnaia 110/35/10 kV transformer	23 2	16 0	145 00	Add 25 MVA transformer	943	I
Novo-Vostochnaia 110/35/6 kV transformer #1	27 8	25 0	111 20	Add second 25 MVA transformer at Orto-Alysh Loop into Vodokanal - Dzhal 35 kV line	910	I
Novo-Vostochnaia 110/35/6 kV transformer #2	39 6	25 0	158 40			
Karagachevaia 110/35/10 kV transformer #2	30 5	25 0	122 00	Build a new 110/35/6 kV substation near Hydro Station 3 Replace Hydro Station 1 and 4 transformers with 10 MVA transformers Reconductor circuit from Hydro Station 3 to Hydro Station 1	2,186	II
Hydro Station 1 35/6 kV transformer	9 6	5 6	171 43			
Hydro Station 4 35/6 kV transformer	4 4	3 2	137 50			
Hydro Station 2 - Hydro Station 3 35 kV	11 4	9 1	125 27			
Hydro Station 1 - Hydro Station 2 35 kV	9 6	9 1	105 49			
Novo-Zapadnaia 110/35/6 kV transformer #1	33 1	31 5	105 08	Balance local distribution load	---	--
DSK 35/6 kV transformer #1	7 4	6 3	117 46	Balance local distribution load	---	--
Subtotal					5,846	

1997 Winter Expected Peak Forecast
List of Facilities Required for System Reliability and Expansion

Facility	Recommendation	Cost ($000 US)	Priority
300 MVAR Capacitor Bank at Bystrovka 220 kV	Needed to improve the voltage profile in the northeastern portion of the Republic	3,150	I
Bishkek Area			
Ala-Archa 220/110 kV Substation -- 2 x 125 MVA transformers -- 100 MVAR, 110 kV capacitor bank	Needed to provide for a third independent bulk power source to Bishkek	10,793	I
110 kV Switchgear at Aini, Alamedin, Energeticheskaia, Karagachevaia, Kostromskaia, Molodogvardeiskaia, Novo-Vostochnaia, Novo-Yuzhnaia, Novo-Zapadnaia, Pikovaia Kotelnaia, Promyshlennaia, and Yuzhnaia	Needed to improve local reliability	3,454	I
Frunzenskaia-Ala Archa #2	Needed to improve reliability and avoid overloads	16,074	I
100 MVAR Capacitor Bank at Glavnaia 110 kV	Needed to improve the voltage profile in northern Bishkek	1,050	I
25 MVAR Capacitor Banks at Karagachevaia, Kyzyl-Asker, Molodogvardeiskaia, and Orto-Alysh 35 kV substations	Needed to improve local voltage profiles	736	I
Centralnaia III 35/6 kV substation	Needed to serve new load areas	449	III
Kok-Dzar 110/35/10 kV substation	Needed to serve new load areas	2,152	III
Kyrgyzskaia 110/10 kV substation	Needed to serve new load areas	1,145	III
Orok 110/35/10 kV substation	Needed to serve new load areas	2,145	III
Subtotal		41,148	
Kalinin Area			
Ak-Bashat 35/10 kV substation	Needed to serve new load areas	369	III
Poltavka 35/10 kV substation	Needed to serve new local areas	684	III
Stepnaia 35/10 kV substation	Needed to serve new local areas	915	III
Teplovaia 35/10 kV substation	Needed to serve new local areas	432	III
Subtotal		2,400	

2000 Winter Expected Peak Forecast
List of Overloaded Facilities

Overloaded Facility	Actual Loading (MVA)	Admissible Loading (MVA)	Percent of Admissible (%)	Recommendation	Cost ($000 US)	Priority
Bishkek Area						
Novo-Zapadnaia 110/35/6 kV transformer #1	42 1	31 5	133 65	Add second 25 MVA transformer at Kostromskaia	910	I
Kyzyl-Asker 110/35/6 kV transformer #1	30 5	20 0	152 50	Replace with 40 MVA transformer	510	I
Molodogvardeiskaia 110/35/10 kV transformer	29 4	16 0	183 75	Add 25 MVA transformer	910	I
Frunzenskaia-Ala Archa 220 kV	313 1	270 0	116 0	Build Ala Archa-Kemin 500 kV	21,097	I
Subtotal					23,427	
Kalinin Area						
TES Kara-Balta 110/35/10 kV transformer #1	22 1	20 0	110 50	Add Pobeda 110/35/10 kV substation	1,996	I
Subtotal					1,996	

2000 Winter Expected Peak Forecast
List of Facilities Required for System Expansion

Facility	Recommendation	Cost ($000 US)	Priority
Bishkek Area			
ABZ 110/10 kV substation	Needed to serve new load areas	657	III
Asanbai 35/6 kV substation	Needed to serve new load areas	449	III
Chui 110/10 kV substation	Needed to serve new load areas	1,365	III
Gagarina 110/10 kV substation	Needed to serve new load areas	1,365	III
Manas-Ata 110/35/10 kV substation	Needed to serve new load areas	1,853	III
Parkovaia 110/35/10 kV substation	Needed to serve new load areas	1,853	III
Rassvet 110/35/10 kV substation	Needed to serve new load areas	1,580	III
Saadaeva 35/10 kV substation	Needed to serve new load areas	455	III
Subtotal		9,577	
Kalinin Area			
Eriktuu 35/10 kV substation	Needed to serve new load areas	747	III
Subtotal		747	

2005 Winter Expected Peak Forecast
List of Overloaded Facilities

Overloaded Facility	Actual Loading (MVA)	Admissible Loading (MVA)	Percent of Admissible (%)	Recommendation	Cost ($000 US)	Priority
Bishkek Area						
Zapadnaia 35/6 kV transformer #1	17 8	10 0	178 0	Add additional 10 MVA transformer	114	I
TES Bishkek - Penko-Dzhutovaia 35 kV	39 7	21 5	184 7	Build Penko-Dzhutovaia 110/35/6 kV substation	1,781	I
Penko-Dzhutovaia - Centralnaia VI 35 kV	26	14 5	179 3			
Centralnaia VI 35/6 kV transformer #1	10 8	10 0	108 0			
Centralnaia VI 35/6 kV transformer #2	11 3	10 0	113 0			
LGS - Nur 35 kV	21 7	18 2	119 2	Reconductor	67	II
Subtotal					1,962	
Kalinin Area						
TES Kara-Balta 110/35/10 kV transformer #1	34 1	20 0	170 5	Add Sosnovka 110/35/10 kV substation	2,740	I
TES Kara-Balta 110/35/10 kV transformer #2	29 1	20 0	145 5			
Sosnovka 35/10 kV transformer #1	4 2	4 0	105 0			
Sosnovka 35/10 kV transformer #2	4 2	4 0	105 0			
Novo-Nikolaevka 35/10 kV transformer	7 8	4 0	195 0	Add 10 MVA transformer	74	II
Subtotal					2,814	

2005 Winter Expected Peak Forecast
List of Facilities Required for System Expansion

Facility	Recommendation	Cost ($000 US)	Priority
Bishkek Area			
Electrodvigatel 35/10 kV substation	Needed to serve new load areas	369	III
Konditerskaia 110/10 kV substation	Needed to serve new load areas	1,145	III
Tunguch 35/10 kV substation	Needed to serve new load areas	455	III
Uchkun 110/35/10 kV substation	Needed to serve new load areas	1,492	III
Subtotal		3,461	

38

COST SUMMARY

A. Transmission System Improvements

	Cost ($000 US)
Bishkek Area	
1997	46,994
2000	33,004
2005	5,423
	85,421
Kalinin Area	
1997	2400
2000	2743
2005	2814
	7,957
Transmission Total	93,378

B. Distribution System Improvements

	Cost ($000 US)
Bishkek Area	43,218
Kalinin Area	8,002
Distribution Total	51,220
GRAND TOTAL	144,598

385

APPENDIX II

Economic Analysis
for
Study Cases 1-4 (Base Assumptions)
and
Study Cases 1a-4a (Sensitivity: DH Load Forecast)

For each study case, the spreadsheets include the following schedules

Sheet Title	page # of 12
Summary of Costs	1
Allocation of Costs	2
Partial Tariffs	3
Input Data and Assumptions	4-5
Load Forecast	6-7
Load/Capacity Balances	8
Energy Production/Fuel Consumption Summary	9
Generating Resource Characteristics	10-11
Investment Schedules	12

Case 1

Summary [illegible]sts

Case Number		1	Base Assumptions									
Study Year		1	2	3	4	5	6	7	8	9	10	11
Calendar Year		1995	1996	1997	1998	1999	2000	2001	2002	2003	2004	2005
Production Costs												
Primary Energy Expenses												
Coal	$000	43 185	58 560	61 195	62 023	63 364	64 879	66 085	67 046	68 267	69 647	71 038
Mazut	$000	3 272	1 372	1 434	1 453	1 485	1 520	1 548	1 571	1 600	1 632	1 664
Natural gas	$000	15 421	4 255	4 555	4 619	4 391	4 398	4 257	3 072	2 941	2 902	2 895
Grid Electric	$000	7	20	52	87	138	618	800	91	143	212	318
Total primary energy	$000	61 884	64 207	67 236	68 182	69 377	71 415	72 691	71 780	72 950	74 393	75 915
Operating and Maintenance Expenses												
Bishkek TES 1 CHP Plant	$000	11 000	12 342	13 904	15 727	17 864	19 240	21 089	23 115	24 647	27 052	29 724
Bishkek TES 1 and TES 2 HOBs	$000	304	358	375	351	317	320	297	92	68	59	56
Industrial steam distribution system	$000	144	160	178	199	223	252	274	299	327	357	390
District heating distribution system	$000	3 000	3 150	3 327	3 517	3 738	3 981	4 127	4 293	4 457	4 643	4 829
New GTCC plant	$000	0	0	0	0	0	0	0	0	0	0	0
Local DH system HOBs	$000	184	216	253	296	301	306	309	312	315	318	320
Total O&M	$000	14 632	16 226	18 036	20 091	22 443	24 100	26 096	28 112	29 813	32 428	35 318
Total Production Costs	$000	76 516	80 433	85 272	88 273	91 820	95 515	98 787	99 892	102 763	106 821	111 234
Investments												
TES 1 Rehabilitation and New HOBs	$000	0	0	0	0	0	0	0	0	0	0	0
New Self generation Capacity	$000	0	0	0	0	0	12 619	12 713	0	0	0	0
District Heating System Rehabilitation	$000	0	0	0	0	0	0	0	0	0	0	0
New HOBs for Local DH System	$000	0	0	0	0	0	0	0	0	867	887	0
Total Investment	$000	0	0	0	0	0	12 619	12 713	0	867	887	0
Total Annual Cost	$000	76 516	80 433	85 272	88 273	91 820	108 134	111 500	99 892	103 630	107 708	111 234

NPV of Costs		thru 2005	thru 2014
Primary energy expense	$000	407 130	523 412
O&M expense	$000	131,053	194,537
Subtotal production costs	$000	538 183	717 949
Investments	$000	12,742	12,742
Total Annual Costs	$000	550 925	730 691
End effect Adjustment	$000	(6,855)	(6,855)
Total Effective Cost	$000	544 069	723 836

?

Allocation of Costs Case No 1 Base Assumptions

Study Year		1	2	3	4	5	6	7	8	9	10	11
Calendar Year		1995	1996	1997	1998	1999	2000	2001	2002	2003	2004	2005
Production Costs												
Fuel and Primary Energy Expenses												
Electric Account												
Bishkek TES 1 CHP fuel	$000	33 171	33 941	34 965	35 698	36 905	38 155	39 321	40 254	41 244	42 637	44 047
New GTCC fuel	$000	0	0	0	0	0	0	0	0	0	0	0
Grid electric for electric loads	$000	7	20	52	85	136	609	789	90	141	209	314
Total primary energy	$000	33 178	33 961	35 016	35 783	37 041	38 765	40 110	40 344	41 385	42 846	44 361
District Heating Account												
Bishkek TES 1 CHP fuel	$000	20 374	20 900	21 426	21 533	21 694	21 917	21 986	22 222	22 443	22 457	22 462
Bishkek TES 1 and TES 2 HOBs fuel	$000	1 942	2 251	2 318	2 136	1 892	1 883	1 729	533	388	334	312
Local DH system HOBs fuel	$000	1 178	1 359	1 563	1 801	1 801	1 801	1 801	1 801	1 801	1 801	1 801
Grid electric for pumping power	$000	0	0	1	1	2	9	11	1	2	3	4
GTCC fuel for pumping power	$000	0	0	0	0	0	0	0	0	0	0	0
Bishkek TES 1 CHP fuel for pumping power	$000	524	541	555	552	553	554	553	549	545	546	547
Total primary energy	$000	24 017	25 052	25 863	26 023	25 943	26 163	26 080	25 106	25 179	25 141	25 126
Process Steam Account												
Bishkek TES 1 CHP fuel	$000	4 689	5 194	6 357	6 376	6 394	6 487	6 501	6 329	6 386	6 406	6 429
Operating and Maintenance Expenses												
Electric Account												
Bishkek TES 1 CHP Plant	$000	8 250	9 256	10 428	11 796	13 398	14 430	15 817	17 336	18 486	20 289	22 293
New GTCC	$000	0	0	0	0	0	0	0	0	0	0	0
Total O&M	$000	8 250	9 256	10 428	11 796	13 398	14 430	15 817	17 336	18 486	20 289	22 293
District Heating Account												
Bishkek TES 1 CHP Plant	$000	1 375	1 543	1 738	1 966	2 233	2 405	2 636	2 889	3 081	3 381	3 716
Bishkek TES 1 and TES 2 HOBs	$000	304	358	375	351	317	320	297	92	68	59	56
District heating distribution system	$000	3 000	3 150	3 327	3 517	3 738	3 981	4 127	4 293	4 457	4 643	4 829
Local DH system HOBs	$000	184	216	253	296	301	306	309	312	315	318	320
Total O&M	$000	4 863	5 267	5 693	6 130	6 589	7 013	7 369	7 587	7 920	8 401	8 920
Process Steam Account												
Bishkek TES 1 CHP Plant	$000	1 375	1 543	1 738	1 966	2 233	2 405	2 636	2 889	3 081	3 381	3 716
Process steam distribution system	$000	144	160	178	199	223	252	274	299	327	357	390
Total O&M	$000	1 519	1 703	1 916	2 165	2 456	2 657	2 911	3 189	3 408	3 738	4 105
Debt Service												
Electric Account												
TES 1 CHP Plant Rehabilitation	$000	0	0	0	0	0	0	0	0	0	0	0
New Self generating Capacity	$000	0	0	0	0	0	0	0	5 321	5 321	5 321	5 321
Ala Archa220/110kV 200 MW grid uprating	$000	0	0	0	0	0	0	0	0	0	0	0
Total	$000	0	0	0	0	0	0	0	5 321	5 321	5 321	5 321
District Heating Account												
TES 1 CHP Plant Rehabilitation	$000	0	0	0	0	0	0	0	0	0	0	0
New HOBs for Bishkek DH System	$000	0	0	0	0	0	0	0	0	0	0	0
New HOBs for Local DH System	$000	0	0	0	0	0	0	0	0	0	0	279
District Heating System Rehabilitation	$000	0	0	0	0	0	0	0	0	0	0	0
Total	$000	0	0	0	0	0	0	0	0	0	0	279
Process Steam Account												
TES 1 CHP Plant Rehabilitation	$000	0	0	0	0	0	0	0	0	0	0	0
Steam Distribution System Rehabilitation	$000	0	0	0	0	0	0	0	0	0	0	0
Total	$000	0	0	0	0	0	0	0	0	0	0	0

Partial Tar[illegible] **Case No** 1 Base Assump[illegible]

Study Year		1	2	3	4	5	6	7	8	9	10	11
Calendar Year		1995	1996	1997	1998	1999	2000	2001	2002	2003	2004	2005
Electric Account												
Total production costs	$000	41 428	43 217	45 444	47 579	50 438	53 195	55 926	57 680	59 871	63 135	66 654
Total carrying charges	$000	0	0	0	0	0	0	0	5,321	5,321	5,321	5,321
Total cost of service	$000	41 428	43 217	45 444	47 579	50 438	53 195	55 926	63 002	65 192	68 456	71 975
Total sales of electricity	GWh	1 352 0	1 409 6	1 459 4	1 500 3	1 542 4	1 585 7	1 630 1	1 675 8	1 722 6	1 770 6	1 819 8
Partial tariff production costs	cents/kWh	3 06	3 07	3 11	3 17	3 27	3 35	3 43	3 44	3 48	3 57	3 66
Partial tariff carrying charges	cents/kWh	0 00	0 00	0 00	0 00	0 00	0 00	0 00	0 32	0 31	0 30	0 29
Partial tariff all costs	cents/kWh	3 06	3 07	3 11	3 17	3 27	3 35	3 43	3 76	3 78	3 87	3 96
District Heating Account												
Total production costs	$000	28 880	30 319	31 555	32 153	32 532	33 176	33 449	32 693	33 099	33 542	34 046
Total carrying charges	$000	0	0	0	0	0	0	0	0	0	0	279
Total cost of service	$000	28 880	30 319	31 555	32 153	32 532	33 176	33 449	32 693	33 099	33 542	34 324
Total sales of district heat	Tcal	2 093 6	2 208 0	2 289 2	2 292 1	2 277 1	2 262 1	2 246 1	2 231 1	2 216 1	2 201 1	2 185 1
Partial tariff production costs	$/Gcal	13 79	13 73	13 78	14 03	14 29	14 67	14 89	14 65	14 94	15 24	15 58
Partial tariff carrying charges	$/Gcal	0.00	0.00	0.00	0.00	0.00	0.00	0.00	0.00	0.00	0.00	0.13
Partial tariff all costs	$/Gcal	13 79	13 73	13 78	14 03	14 29	14 67	14 89	14 65	14 94	15 24	15 71
Process Steam Account												
Total production costs	$000	6 208	6 896	8 273	8 541	8 851	9 144	9 411	9 518	9 794	10 144	10 534
Total carrying charges	$000	0	0	0	0	0	0	0	0	0	0	0
Total cost of service	$000	6 208	6 896	8 273	8 541	8 851	9 144	9 411	9 518	9 794	10 144	10 534
Total sales of process steam	Tcal	400 0	450 0	550 0	550 0	550 0	550 0	550 0	550 0	550 0	550 0	550 0
Partial tariff production costs	$/Gcal	15 52	15 33	15 04	15 53	16 09	16 63	17 11	17 31	17 81	18 44	19 15
Partial tariff carrying charges	$/Gcal	0.00	0.00	0.00	0.00	0.00	0.00	0.00	0.00	0.00	0.00	0.00
Partial tariff all costs	$/Gcal	15 52	15 33	15 04	15 53	16 09	16 63	17 11	17 31	17 81	18 44	19 15

390

Input Data and Assumptions

Case Number			1	Base Assumptions
Thermal Energy Supply Source	0	TES 1 + HOBs		
Rehabilitate TES 1?	0	No		
Electric Energy Supply Source	0	TES 1 + Grid Electric		
Supplemental Electric Capacity	1	New GTCC		
District Heating Scenario	0	Scenario No Project	= No modernization no expansion only rehabilitation	
Local DH supply by Bishkek DH?	0	No		
When?	1997	and beyond		

Study Year			1	2	3	4	5	6	7	8	9	10	11
Calendar Year			1995	1996	1997	1998	1999	2000	2001	2002	2003	2004	2005
Thermal Energy													
District Heating													
Maximum Demand													
Existing customers	generation basis	Gcal/hr	900 0	935 0	950 0	924 0	897 0	870 0	850 0	826 0	802 0	778 0	754 0
New customers	generation basis	Gcal/hr	46.0	53.0	61.0	71.0	71.0	71.0	71.0	71.0	71.0	71.0	71.0
Total	generation basis	Gcal/hr	946 0	988 0	1 011 0	995 0	968 0	941 0	921 0	897 0	873 0	849 0	825 0
Disposition of energy													
Existing customers	sales basis	Tcal	2 000 0	2 100 0	2 165 0	2 149 0	2 134 0	2 119 0	2 103 0	2 088 0	2 073 0	2 058 0	2 042 0
New customers	generation basis	Tcal	104 0	120 0	138 0	159 0	159 0	159 0	159 0	159 0	159 0	159 0	159 0
Contingency Requirements (LU or 15%)													
Bishkek DH System	15 0%	Gcal/hr	135 0	140 3	142 5	138 6	134 6	130 5	127 5	155 0	155 0	155 0	155 0
Local DH System	15 0%	Gcal/hr	50 0	50 0	50 0	50 0	50 0	50 0	50 0	50 0	50 0	50 0	20 0
District heating pipe losses													
Bishkek DH system		%	25 01%	25 00%	24 51%	24 75%	24 99%	25 20%	25 45%	25 67%	25 91%	26 13%	26 41%
Local DH system		%	10 00%	10 00%	10 00%	10 00%	10 00%	10 00%	10 00%	10 00%	10 00%	10 00%	10 00%
DH pumping at booster stations		kWh/Gcal	7 70	7 70	7 70	7 70	7 70	7 70	7 70	7 70	7 70	7 70	7 70
CHP plant piping efficiency		%	96 0%										
Process Steam													
Energy	generation basis	Tcal	571 4	642 9	785 7	785 7	785 7	785 7	785 7	785 7	785 7	785 7	785 7
Piping losses		%	30 00%	30 00%	30 00%	30 00%	30 00%	30 00%	30 00%	30 00%	30 00%	30 00%	30 00%
Ratio of annual maximum demand to annual average demand			2 0										
Heat exchange efficiency steam > hot water		Gcal/hr/Gcal/hr	1 0										
Electric Energy			1995	1996	1997	1998	1999	2000	2001	2002	2003	2004	2005
Maximum Demand local customers	generation basis	MW	425 0	434 2	443 6	453 3	463 1	473 2	483 4	493 9	504 6	515 6	526 8
annual growth		%		2 2%	2 2%	2 2%	2 2%	2 2%	2 2%	2 2%	2 2%	2 2%	2 2%
Disposition of energy local customers	sales basis	GWh	1 002 0	1 052 0	1 094 0	1 127 0	1 161 0	1 196 0	1 232 0	1 269 0	1 307 0	1 346 0	1 386 0
annual growth		%		5 0%	4 0%	3 0%	3 0%	3 0%	3 0%	3 0%	3 0%	3 0%	3 0%
T&D losses		%	12 0%	12 0%	12 0%	11 0%	11 0%	11 0%	11 0%	11 0%	10 0%	10 0%	10 0%
Contingency requirement (LU or 15% max)	15 0%	MW	80 0	81 6	83 4	85 1	86 9	88 8	90 6	92 6	94 5	96 5	98 6
Grid capability		MW	200 0	200 0	200 0	200 0	200 0	200 0	200 0	200 0	200 0	200 0	200 0
	esc after 2005												
Grid electricity price forecast	0 0%	$/kWh	0 0300	0 0300	0 0300	0 0300	0 0300	0 0300	0 0300	0 0300	0 0300	0 0300	0 0300
GTCC unit addition block size		MW	75 0										
GTCC capability		MW	0 0	0 0	0 0	0 0	0 0	0 0	0 0	0 0	0 0	0 0	0 0
GTCC fuel cost		$/kWh	0 0189	0 0189	0 0189	0 0189	0 0189	0 0189	0 0189	0 0189	0 0189	0 0189	0 0189
GTCC annual average heat rate		kcal/kWh	2 008 1										
Maximum Demand transfers	generation basis	MW	100 0	102 2	104 4	106 7	109 0	111 3	113 7	116 2	118 7	121 3	123 9
annual growth		%		2 2%	2 2%	2 2%	2 2%	2 2%	2 2%	2 2%	2 2%	2 2%	2 2%
Disposition of energy transfers	sales basis	GWh	350 0	357 6	365 4	373 3	381 4	389 7	398 1	406 8	415 6	424 6	433 8
annual growth		%		2 2%	2 2%	2 2%	2 2%	2 2%	2 2%	2 2%	2 2%	2 2%	2 2%
Fuel Price Forecast	esc after 2005												
Coal	0 0%	$/Gcal	8 80	8 80	8 80	8 80	8 80	8 80	8 80	8 80	8 80	8 80	8 80
Mazut	0 0%	$/Gcal	10 00	10 00	10 00	10 00	10 00	10 00	10 00	10 00	10 00	10 00	10 00
Natural Gas	0 0%	$/Gcal	9 40	9 40	9 40	9 40	9 40	9 40	9 40	9 40	9 40	9 40	9 40

Fuel Mix for Supply Resources		1995	1996	1997	1998	1999	2000	2001	2002	2003	2	2005
TES 1 CHP boilers												
Coal	%	75 0%	97 0%	97 0%	97 0%	97 0%	97 0%	97 0%	97 0%	97 0%	97 0%	97 0%
Mazut	%	5 0%	2 0%	2 0%	2 0%	2 0%	2 0%	2 0%	2 0%	2 0%	2 0%	2 0%
Natural Gas	%	20 0%	1 0%	1 0%	1 0%	1 0%	1 0%	1 0%	1 0%	1 0%	1 0%	1 0%
Weighted average fuel price	$/Gcal	8 98	8 83	8 83	8 83	8 83	8 83	8 83	8 83	8 83	8 83	8 83
Bishkek HOBs												
Coal	%	0 0%	0 0%	0 0%	0 0%	0 0%	0 0%	0 0%	0 0%	0 0%	0 0%	0 0%
Mazut	%	0 0%	0 0%	0 0%	0 0%	0 0%	0 0%	0 0%	0 0%	0 0%	0 0%	0 0%
Natural Gas	%	100 0%	100 0%	100 0%	100 0%	100 0%	100 0%	100 0%	100 0%	100 0%	100 0%	100 0%
Weighted average fuel price	$/Gcal	9 40	9 40	9 40	9 40	9 40	9 40	9 40	9 40	9 40	9 40	9 40
Local DH Boilers												
Coal	%	0 0%	0 0%	0 0%	0 0%	0 0%	0 0%	0 0%	0 0%	0 0%	0 0%	0 0%
Mazut	%	0 0%	0 0%	0 0%	0 0%	0 0%	0 0%	0 0%	0 0%	0 0%	0 0%	0 0%
Natural Gas	%	100 0%	100 0%	100 0%	100 0%	100 0%	100 0%	100 0%	100 0%	100 0%	100 0%	100 0%
Weighted average fuel price	$/Gcal	9 40	9 40	9 40	9 40	9 40	9 40	9 40	9 40	9 40	9 40	9 40

Boiler efficiencies		1995	1996	1997	1998	1999	2000	2001	2002	2003	2004	2005
Bishkek CHP boilers (TES 1)		87 5%	87 3%	87 1%	86 9%	86 7%	86 5%	86 3%	86 1%	85 9%	85 7%	85 5%
Bishkek HOBs (TES 1 and TES 2)	%	89 0%	89 0%	89 0%	89 0%	89 0%	89 0%	89 0%	89 0%	89 0%	89 0%	89 0%
Local HOBs (Frunze JAL)												
Coal	%	0 0%	0 0%	0 0%	0 0%	0 0%	0 0%	0 0%	0 0%	0 0%	0 0%	0 0%
Mazut	%	89 0%	89 0%	89 0%	89 0%	89 0%	89 0%	89 0%	89 0%	89 0%	89 0%	89 0%
Natural gas	%	83 0%	83 0%	83 0%	83 0%	83 0%	83 0%	83 0%	83 0%	83 0%	83 0%	83 0%
Weighted average	%	*83 0%*	*83 0%*	*83 0%*	*83 0%*	*83 0%*	*83 0%*	*83 0%*	*83 0%*	*83 0%*	*83 0%*	*83 0%*
Process steam generation	Gcal/hr add l heat input per Gcal/hr steam	0 63	0 63	0 63	0 63	0 63	0 64	0 64	0 64	0 64	0 64	0 64

Performance Degradation		
Annual change in boiler efficiency	%	0 20%
Annual change in electric capability	%	0 10%

Fuel Allocation for Cogeneration Energy		
Methodology #A CHP advantage devoted to DH energy		
Electric power only production efficiency	%	30 0%
Methodology #B CHP advantage devoted to electric energy		
Distric heat only production efficiency	%	87 0%
Allocation Factors for TES 1 CHP Plant O&M and Investment		
% allocated to electric production	%	75 0%
% allocated to district heating production	%	12 5%
% allocated to process steam production	%	12 5%

Economic and Financial Parameters			
Capital cost real escalation rates		1995 2000	2001 2014
Western	%	0 00%	0 00%
Russian	%	0 00%	0 00%
Kyrgyz labor	%	16 90%	6 60%
Kyrgyz material	%	1 70%	0 90%
Kyrgyz equipment	%	1 50%	3 20%
Discount Rate for NPV Calculation	%	12 00%	
Physical contingencies + technical assistance & training	% of direct costs	12 50%	

Composite escalation factors												
Western	1 000	1 000	1 000	1 000	1 000	1 000	1 000	1 000	1 000	1 000	1 000
Russian	1 000	1 000	1 000	1 000	1 000	1 000	1 000	1 000	1 000	1 000	1 000
Kyrgyz labor	1 000	1 169	1 367	1 598	1 867	2 183	2 327	2 481	2 645	2 819	3 005
Kyrgyz material	1 000	1 017	1 034	1 052	1 070	1 088	1 098	1 108	1 118	1 128	1 138
Kyrgyz equipment	1 000	1 015	1 030	1 046	1 061	1 077	1 112	1 147	1 184	1 222	1 261

Load Forecast

Case Number 1 Base Assumptions

Load Forecast Development

Study Year		1	2	3	4	5	6	7	8	9	10	11
Calendar Year		1995	1996	1997	1998	1999	2000	2001	2002	2003	2004	2005
District heating pipe losses												
Bishkek DH system	%	25.01%	25.00%	24.51%	24.75%	24.99%	25.20%	25.45%	25.67%	25.91%	26.13%	26.41%
Local DH system	%	10.00%	10.00%	10.00%	10.00%	10.00%	10.00%	10.00%	10.00%	10.00%	10.00%	10.00%
T&D losses (in Bishkek)	%	12.0%	12.0%	12.0%	11.0%	11.0%	11.0%	11.0%	11.0%	10.0%	10.0%	10.0%
Thermal Energy												
Bishkek DH System Hot Water												
Maximum Demand (generation basis)												
Existing customers	Gcal/hr	900.0	935.0	950.0	924.0	897.0	870.0	850.0	826.0	802.0	778.0	754.0
New customers	Gcal/hr	0.0	0.0	0.0	0.0	0.0	0.0	0.0	0.0	0.0	0.0	0.0
Total Maximum Demand	*Gcal/hr*	*900.0*	*935.0*	*950.0*	*924.0*	*897.0*	*870.0*	*850.0*	*826.0*	*802.0*	*778.0*	*754.0*
Disposition of Energy												
Existing customers	Tcal	2,000.0	2,100.0	2,165.0	2,149.0	2,134.0	2,119.0	2,103.0	2,088.0	2,073.0	2,058.0	2,042.0
New customers	Tcal	0.0	0.0	0.0	0.0	0.0	0.0	0.0	0.0	0.0	0.0	0.0
Total (sales basis)	Tcal	2,000.0	2,100.0	2,165.0	2,149.0	2,134.0	2,119.0	2,103.0	2,088.0	2,073.0	2,058.0	2,042.0
Distribution losses												
Existing customers	Tcal	667.0	700.0	702.9	706.8	711.0	713.9	717.9	721.1	724.9	728.0	732.8
New customers	Tcal	0.0	0.0	0.0	0.0	0.0	0.0	0.0	0.0	0.0	0.0	0.0
Total Disposition of Energy	*Tcal*	*2,667.0*	*2,800.0*	*2,867.9*	*2,855.8*	*2,845.0*	*2,832.9*	*2,820.9*	*2,809.1*	*2,797.9*	*2,786.0*	*2,774.8*
Bishkek DH System Process Steam												
Energy generation basis	Tcal	571.4	642.9	785.7	785.7	785.7	785.7	785.7	785.7	785.7	785.7	785.7
Energy sales basis	Tcal	400.0	450.0	550.0	550.0	550.0	550.0	550.0	550.0	550.0	550.0	550.0
Local DH System Hot Water												
Maximum Demand (generation basis)	Gcal/hr	46.0	53.0	61.0	71.0	71.0	71.0	71.0	71.0	71.0	71.0	71.0
Disposition of Energy												
Existing customers	Tcal	93.6	108.0	124.2	143.1	143.1	143.1	143.1	143.1	143.1	143.1	143.1
Distribution losses	Tcal	10.4	12.0	13.8	15.9	15.9	15.9	15.9	15.9	15.9	15.9	15.9
Total Disposition of Energy	*Tcal*	104.0	120.0	138.0	159.0	159.0	159.0	159.0	159.0	159.0	159.0	159.0
Electric Energy												
Maximum Demand (generation basis)												
Local customers	MW	425.0	434.2	443.6	453.3	463.1	473.2	483.4	493.9	504.6	515.6	526.8
Transfers	MW	100.0	102.2	104.4	106.7	109.0	111.3	113.7	116.2	118.7	121.3	123.9
DH pumping power	MW	7.3	7.6	7.8	7.7	7.5	7.2	7.1	6.9	6.7	6.5	6.4
Total Maximum Demand	*MW*	*532.3*	*544.0*	*555.8*	*567.6*	*579.5*	*591.7*	*604.3*	*617.0*	*630.1*	*643.4*	*657.1*
Disposition of Energy												
Local customers (sales basis)	GWh	1,002.0	1,052.0	1,094.0	1,127.0	1,161.0	1,196.0	1,232.0	1,269.0	1,307.0	1,346.0	1,386.0
Transfers	GWh	350.0	357.6	365.4	373.3	381.4	389.7	398.1	406.8	415.6	424.6	433.8
DH pumping power	GWh	21.3	22.5	23.1	23.2	23.1	23.0	22.9	22.9	22.8	22.7	22.6
Total consumption	GWh	1,373.3	1,432.1	1,482.5	1,523.5	1,565.5	1,608.7	1,653.1	1,698.6	1,745.3	1,793.3	1,842.4
T&D losses	GWh	187.3	195.3	202.2	188.3	193.5	198.8	204.3	209.9	193.9	199.3	204.7
Total Disposition of Energy	*GWh*	*1,560.6*	*1,627.4*	*1,684.7*	*1,711.8*	*1,759.0*	*1,807.5*	*1,857.4*	*1,908.5*	*1,939.3*	*1,992.5*	*2,047.1*

Summary of Load Forecasts (generation basis)

Calendar Year		1995	1996	1997	1998	1999	2000	2001	2002	2003	2004	2005
Thermal Load to be Served by Bishkek DH System												
Maximum Demand Hot Water	Gcal/hr	900 0	935 0	950 0	924 0	897 0	870 0	850 0	826 0	802 0	778 0	754 0
Thermal Energy Hot Water	Tcal	2 667 0	2 800 0	2 867 9	2 855 8	2 845 0	2 832 9	2 820 9	2 809 1	2 797 9	2 786 0	2 774 8
Maximum Demand Process Steam	Gcal/hr	130 5	146 8	179 4	179 4	179 4	179 4	179 4	179 4	179 4	179 4	179 4
Thermal Energy Process Steam	Tcal	571 4	642 9	785 7	785 7	785 7	785 7	785 7	785 7	785 7	785 7	785 7
Thermal Load to be Served by Local DH System												
Maximum Demand Hot Water	Gcal/hr	46 0	53 0	61 0	71 0	71 0	71 0	71 0	71 0	71 0	71 0	71 0
Thermal Energy Hot Water	Tcal	104 0	120 0	138 0	159 0	159 0	159 0	159 0	159 0	159 0	159 0	159 0
Maximum Demand Process Steam	Gcal/hr	0 0	0 0	0 0	0 0	0 0	0 0	0 0	0 0	0 0	0 0	0 0
Thermal Energy Process Steam	Tcal	0 0	0 0	0 0	0 0	0 0	0 0	0 0	0 0	0 0	0 0	0 0
Total Thermal Load to be Served												
Maximum Demand Hot Water	Gcal/hr	946 0	988 0	1 011 0	995 0	968 0	941 0	921 0	897 0	873 0	849 0	825 0
Thermal Energy Hot Water	Tcal	2 771 0	2 920 0	3 005 9	3 014 8	3 004 0	2 991 9	2 979 9	2 968 1	2 956 9	2 945 0	2 933 8
Maximum Demand Process Steam	Gcal/hr	130 5	146 8	179 4	179 4	179 4	179 4	179 4	179 4	179 4	179 4	179 4
Thermal Energy Process Steam	Tcal	571 4	642 9	785 7	785 7	785 7	785 7	785 7	785 7	785 7	785 7	785 7
Total Electric Load Forecast												
Maximum Demand	MW	532 3	544 0	555 8	567 6	579 5	591 7	604 3	617 0	630 1	643 4	657 1
Electric Energy	GWh	1,560 6	1,627 4	1,684 7	1,711 8	1,759 0	1,807 5	1,857 4	1,908 5	1,939 3	1,992 5	2,047 1

Load/Capacity Balance

Case No 1 Base Assumptions add TG11 in 2002

Study Year		1	2	3	4	5	6	7	8	9	10	11
Calendar Year		1995	1996	1997	1998	1999	2000	2001	2002	2003	2004	2005
Electric Energy												
Maximum Demand	MW	532 3	544 0	555 8	567 6	579 5	591 7	604 3	617 0	630 1	643 4	657 1
Existing capacity resources												
TES 1 CHP Plant	MW	550 5	549 9	549 4	548 9	548 3	506 1	505 6	505 1	588 2	587 6	587 0
Grid electric capacity	MW	200 0	200 0	200 0	200 0	200 0	200 0	200 0	200 0	200 0	200 0	200 0
GTCC	MW	0.0	0.0	0.0	0.0	0.0	0.0	0.0	0.0	0.0	0.0	0.0
Total capacity resources before additions	MW	750 5	749 9	749 4	748 9	748 3	706 1	705 6	705 1	788 2	787 6	787 0
/ reserve before capacity additions	/	41 0%	37 9%	34 8/	31 9%	29 1/	19 3/	16 8%	14 3/	25 1%	22 4/	19 8%
Capacity resources required	MW	612 3	625 6	639 2	652 7	666 5	680 5	694 9	709 6	724 6	740 0	755 6
Additional capacity required (minimum)	MW	0 0	0 0	0 0	0 0	0 0	0 0	0 0	4 5	0 0	0 0	0 0
Capacity additions/retirements												
TES 1 CHP Rehabilitation (install TG11 or equiv)	MW	0 0	0 0	0 0	0 0	0 0	0 0	0 0	83 7	0 0	0 0	0 0
TES 1 CHP Retirement of Unit 1 and 2	MW	0 0	0 0	0 0	0 0	(41 7)	0 0	0 0	0 0	0 0	0 0	0 0
Grid electric capacity additions	MW	0 0	0 0	0 0	0 0	0 0	0 0	0 0	0 0	0 0	0 0	0 0
GTCC capacity additions	MW	0 0	0 0	0 0	0 0	0 0	0 0	0 0	0 0	0 0	0 0	0 0
Total capacity resources after additions	MW	750 5	749 9	749 4	748 9	748 3	706 1	705 6	788 8	788 2	787 6	787 0
/ reserve after capacity additions	/	41 0%	37 9%	34 8%	31 9%	29 1%	19 3/	16 8%	27 8/	25 1/	22 4/	19 8/
Thermal Energy - Hot Water												
Bishkek DH System												
Maximum Demand	Gcal/hr	900 0	935 0	950 0	924 0	897 0	870 0	850 0	826 0	802 0	778 0	754 0
Existing capacity resources												
TES 1 CHP Plant												
nominal HW capacity	Gcal/hr	740 0	740 0	740 0	740 0	740 0	656 4	656 4	811 4	811 4	811 4	811 4
peaking HW capacity	Gcal/hr	281.3	265.0	232.4	232.4	232.4	229.0	229.0	229.0	229.0	229.0	229.0
total	Gcal/hr	1 021 3	1 005 0	972 4	972 4	972 4	885 4	885 4	1 040 4	1 040 4	1 040 4	1 040 4
TES 1HOBs	Gcal/hr	300 0	300 0	300 0	300 0	300 0	300 0	300 0	300 0	300 0	300 0	300 0
TES 2 HOBs	Gcal/hr	192 0	192 0	192 0	192 0	192 0	192 0	192 0	192 0	192 0	192 0	192 0
Existing HOBs Frunze	Gcal/hr	0 0	0 0	0 0	0 0	0 0	0 0	0 0	0 0	0 0	0 0	0 0
Existing HOBs JAL	Gcal/hr	0 0	0 0	0 0	0 0	0 0	0 0	0 0	0 0	0 0	0 0	0 0
New HOBs in local DH system	Gcal/hr	0.0	0.0	0.0	0.0	0.0	0.0	0.0	0.0	0.0	0.0	0.0
Total capacity resources before additions	Gcal/hr	1 513 3	1 497 0	1 464 4	1 464 4	1 464 4	1 377 4	1 377 4	1 532 4	1 532 4	1 532 4	1 532 4
/ reserve before capacity additions	%	68 1/	60 1%	54 1%	58 5/	63 3/	58 3/	62 0%	85 5/	91 1/	97 0/	103 2%
Capacity resources required	Gcal/hr	1 035 0	1 075 3	1 092 5	1 062 6	1 031 6	1 000 5	977 5	981 0	957 0	933 0	909 0
Additional capacity required (minimum)	Gcal/hr	0 0	0 0	0 0	0 0	0 0	0 0	0 0	0 0	0 0	0 0	0 0
Capacity additions/retirements												
New HOB capacity	Gcal/hr	0 0	0 0	0 0	0 0	0 0	0 0	0 0	0 0	0 0	0 0	0 0
Total capacity resources after additions	Gcal/hr	1 513 3	1 497 0	1 464 4	1 464 4	1 464 4	1 377 4	1 377 4	1 532 4	1 532 4	1 532 4	1 532 4
/ reserve after capacity additions	%	68 1/	60 1/	54 1/	58 5%	63 3/	58 3/	62 0/	85 5/	91 1/	97 0%	103 2/
Local DH System												
Maximum Demand	Gcal/hr	46 0	53 0	61 0	71 0	71 0	71 0	71 0	71 0	71 0	71 0	71 0
Existing capacity resources												
Existing HOBs Frunze	Gcal/hr	150 0	150 0	150 0	150 0	150 0	150 0	150 0	150 0	150 0	150 0	0 0
Existing HOBs JAL	Gcal/hr	40 0	40 0	40 0	40 0	40 0	40 0	40 0	40 0	40 0	40 0	40 0
New HOBs capacity additions	Gcal/hr	0 0	0.0	0.0	0.0	0 0	0.0	0.0	0.0	0.0	0.0	0.0
Total capacity resources before additions	Gcal/hr	190 0	190 0	190 0	190 0	190 0	190 0	190 0	190 0	190 0	190 0	40 0
/ reserve before capacity additions	%	313 0%	258 5%	211 5%	167 6/	167 6%	167 6/	167 6/	167 6/	167 6/	167 6%	-43 7/
Capacity resources required	Gcal/hr	96 0	103 0	111 0	121 0	121 0	121 0	121 0	121 0	121 0	121 0	91 0
Additional capacity required (minimum)	Gcal/hr	0 0	0 0	0 0	0 0	0 0	0 0	0 0	0 0	0 0	0 0	51 0
Capacity additions/retirements												
New HOB capacity	Gcal/hr	0 0	0 0	0 0	0 0	0 0	0 0	0 0	0 0	0 0	0 0	50 0
Frunze boiler retirements	Gcal/hr	0.0	0.0	0.0	0.0	0 0	0.0	0 0	0.0	0.0	(150 0)	0 0
Total capacity resources after additions	Gcal/hr	190 0	190 0	190 0	190 0	190 0	190 0	190 0	190 0	190 0	190 0	90 0
/ reserve after capacity additions	/	313 0%	258 5/	211 5/	167 6/	167 6/	167 6/	167 6/	167 6/	167 6/	167 6/	26 8/
Thermal Energy Process Steam												
Maximum Demand	Gcal/hr	130 5	146 8	179 4	179 4	179 4	179 4	179 4	179 4	179 4	179 4	179 4
Existing capacity resources (TES 1 CHP)	Gcal/hr	411 8	411 8	411 8	411 8	411 8	408 4	408 4	408 4	408 4	408 4	408 4
/ reserve	/	215 6/	180 6/	129 6%	129 6/	129 6/	127 7/	127 7/	127 7%	127 7/	127 7/	127 7%

Energy Production/Fuel Consumption Summary

Case Number 1 Base Assumptions

Study Year		1	2	3	4	5	6	7	8	9	10	11
Calendar Year		1995	1996	1997	1998	1999	2000	2001	2002	2003	2004	2005
Energy Production												
Electric Energy Generation												
Bishkek CHP Plant (TES 1)	GWh	1 560 4	1 626 7	1 682 9	1 708 9	1 754 4	1 786 9	1 830 7	1 905 5	1 934 5	1 985 5	2 036 5
Grid electric	GWh	0 2	0 7	1 7	2 9	4 6	20 6	26 7	3 0	4 8	7 1	10 6
GTCC	GWh	0.0	0 0	0.0	0.0	0.0	0.0	0.0	0.0	0.0	0.0	0 0
Total	GWh	1 560 6	1 627 4	1 684 7	1 711 8	1 759 0	1 807 5	1 857 4	1 908 5	1 939 3	1 992 5	2 047 1
Thermal Energy Generation												
District heating (heat hot water)												
Bishkek CHP Plant (TES 1)	Tcal	2 483 2	2 586 9	2 648 5	2 653 6	2 665 8	2 654 6	2 657 2	2 758 6	2 761 2	2 754 3	2 745 3
Bishkek HOBs (TES 1 and TES 2)	Tcal	183 9	213 1	219 5	202 2	179 1	178 3	163 7	50 5	36 7	31 7	29 5
Local DH System HOBs	Tcal	104.0	120.0	138.0	159.0	159.0	159.0	159.0	159.0	159.0	159.0	159.0
Total	Tcal	2 771 0	2 920 0	3 005 9	3 014 8	3 004 0	2 991 9	2 979 9	2 968 1	2 956 9	2 945 0	2 933 8
Process steam												
Bishkek DH system (TES 1)	Tcal	571 4	642 9	785 7	785 7	785 7	785 7	785 7	785 7	785 7	785 7	785 7
Fuel Consumption												
Bishkek DH System												
Coal	Tcal	4 907 4	6 654 5	6 953 9	7 048 0	7 200 5	7 372 6	7 509 6	7 618 9	7 757 6	7 914 5	8 072 5
Mazut	Tcal	327 2	137 2	143 4	145 3	148 5	152 0	154 8	157 1	160 0	163 2	166 4
Natural gas	Tcal	1,515.2	308.1	318.3	299.8	275.5	276.3	261 3	135.2	121.3	117.2	116.4
Total	Tcal	6 749 7	7 099 8	7 415 6	7 493 2	7 624 4	7 800 9	7 925 8	7 911 2	8 038 9	8 194 8	8 355 3
Local DH System												
Coal	Tcal	0 0	0 0	0 0	0 0	0 0	0 0	0 0	0 0	0 0	0 0	0 0
Mazut	Tcal	0 0	0 0	0 0	0 0	0 0	0 0	0 0	0 0	0 0	0 0	0 0
Natural gas	Tcal	125.3	144.6	166.3	191.6	191.6	191.6	191 6	191.6	191.6	191.6	191 6
Total	Tcal	125 3	144 6	166 3	191 6	191 6	191 6	191 6	191 6	191 6	191 6	191 6
GTCC natural gas	Tcal	0 0	0 0	0 0	0 0	0 0	0 0	0 0	0 0	0 0	0 0	0 0
Total Fuel Consumption	Tcal	6 875 0	7 244 4	7 581 9	7 684 8	7 816 0	7 992 5	8 117 4	8 102 8	8 230 4	8 386 4	8 546 9
/ by type												
Coal	/	71 4/	91 9/	91 7%	91 7%	92 1%	92 2/	92 5/	94 0/	94 3/	94 4/	94 4/
Mazut	%	4 8/	1 9/	1 9/	1 9/	1 9/	1 9/	1 9/	1 9/	1 9/	1 9/	1 9/
Natural gas	/	23.9%	6.2/	6.4%	6.4%	6.0%	5.9%	5.6/	4.0%	3.8%	3.7%	3.6%
Total	/	100 0/	100 0/	100 0%	100 0%	100 0/	100 0/	100 0/	100 0/	100 0/	100 0/	100 0%

Generating Resource Characteristics

Case Number 1 Base Assumptions

Study Year		1	2	3	4	5	6	7	8	9	10	11
Calendar Year		1995	1996	1997	1998	1999	2000	2001	2002	2003	2004	2005
TES-1 CHP Plant		1995	1996	1997	1998	1999	2000	2001	2002	2003	2004	2005
Electric Capability												
Unit #1	MW	35 0	35 0	35 0	35 0	35 0	0 0	0 0	0 0	0 0	0 0	0 0
Unit #2	MW	25 0	25 0	25 0	25 0	25 0	0 0	0 0	0 0	0 0	0 0	0 0
Unit #3	MW	50 0	50 0	50 0	50 0	50 0	50 0	50 0	50 0	50 0	50 0	50 0
Unit #4	MW	35 0	35 0	35 0	35 0	35 0	35 0	35 0	35 0	35 0	35 0	35 0
Unit #5	MW	35 0	35 0	35 0	35 0	35 0	35 0	35 0	35 0	35 0	35 0	35 0
Unit #6	MW	86 0	86 0	86 0	86 0	86 0	86 0	86 0	86 0	86 0	86 0	86 0
Unit #7	MW	60 0	60 0	60 0	60 0	60 0	60 0	60 0	60 0	60 0	60 0	60 0
Unit #8	MW	60 0	60 0	60 0	60 0	60 0	60 0	60 0	60 0	60 0	60 0	60 0
Unit #9	MW	86 0	86 0	86 0	86 0	86 0	86 0	86 0	86 0	86 0	86 0	86 0
Unit #10	MW	86 0	86 0	86 0	86 0	86 0	86 0	86 0	86 0	86 0	86 0	86 0
Unit #11	MW	0.0	0.0	0.0	0.0	0.0	0.0	0.0	90.0	90.0	90.0	90.0
Total	MW	558 0	558 0	558 0	558 0	558 0	498 0	498 0	588 0	588 0	588 0	588 0
Largest Unit	MW	86 0	86 0	86 0	86 0	86 0	86 0	86 0	90 0	90 0	90 0	90 0
	MW net	80 0	80 0	80 0	80 0	80 0	80 0	80 0	83 7	83 7	83 7	83 7
DH Capability Hot Water												
Unit #1	Gcal/hr	35 0	35 0	35 0	35 0	35 0	0 0	0 0	0 0	0 0	0 0	0 0
Unit #2	Gcal/hr	48 6	48 6	48 6	48 6	48 6	0 0	0 0	0 0	0 0	0 0	0 0
Unit #3	Gcal/hr	51 0	51 0	51 0	51 0	51 0	51 0	51 0	51 0	51 0	51 0	51 0
Unit #4	Gcal/hr	97 0	97 0	97 0	97 0	97 0	97 0	97 0	97 0	97 0	97 0	97 0
Unit #5	Gcal/hr	97 0	97 0	97 0	97 0	97 0	97 0	97 0	97 0	97 0	97 0	97 0
Unit #6	Gcal/hr	102 6	102 6	102 6	102 6	102 6	102 6	102 6	102 6	102 6	102 6	102 6
Unit #7	Gcal/hr	61 0	61 0	61 0	61 0	61 0	61 0	61 0	61 0	61 0	61 0	61 0
Unit #8	Gcal/hr	61 0	61 0	61 0	61 0	61 0	61 0	61 0	61 0	61 0	61 0	61 0
Unit #9	Gcal/hr	102 6	102 6	102 6	102 6	102 6	102 6	102 6	102 6	102 6	102 6	102 6
Unit #10	Gcal/hr	103 0	103 0	103 0	103 0	103 0	103 0	103 0	103 0	103 0	103 0	103 0
Unit #11	Gcal/hr	0.0	0.0	0.0	0 0	0 0	0.0	0.0	155.0	155 0	155.0	155.0
Total	Gcal/hr	758 8	758 8	758 8	758 8	758 8	675 2	675 2	830 2	830 2	830 2	830 2
Largest Unit	Gcal/hr	103 0	103 0	103 0	103 0	103 0	103 0	103 0	155 0	155 0	155 0	155 0
Boiler Efficiencies		1999	2003									
w/o Rehabilitation	%	87 5%										
w/Rehabilitation	%	89 5%										
Boiler #14	%	87 5%	87 3%	87 1%	86 9%	86 7%	86 5%	86 3%	86 1%	85 9%	85 7%	85 5%
Boiler #15	%	87 5%	87 3%	87 1%	86 9%	86 7%	86 5%	86 3%	86 1%	85 9%	85 7%	85 5%
Boiler #16	%	87 5%	87 3%	87 1%	86 9%	86 7%	86 5%	86 3%	86 1%	85 9%	85 7%	85 5%
Boiler #17	%	87 5%	87 3%	87 1%	86 9%	86 7%	86 5%	86 3%	86 1%	85 9%	85 7%	85 5%
Boiler #18	%	87 5%	87 3%	87 1%	86 9%	86 7%	86 5%	86 3%	86 1%	85 9%	85 7%	85 5%
Boiler #19	%	87 5%	87 3%	87 1%	86 9%	86 7%	86 5%	86 3%	86 1%	85 9%	85 7%	85 5%
Boiler #20	%	87 5%	87 3%	87 1%	86 9%	86 7%	86 5%	86 3%	86 1%	85 9%	85 7%	85 5%
Boiler #21	%	87 5%	87 3%	87 1%	86 9%	86 7%	86 5%	86 3%	86 1%	85 9%	85 7%	85 5%
Boiler #22	%	87 5%	87 3%	87 1%	86 9%	86 7%	86 5%	86 3%	86 1%	85 9%	85 7%	85 5%
Boiler #23	%	87 5%	87 3%	87 1%	86 9%	86 7%	86 5%	86 3%	86 1%	85 9%	85 7%	85 5%
Boiler #24	%	87.5%	87 3%	87.1%	86 9%	86.7%	86.5%	86.3%	86 1%	85.9%	85 7%	85.5%
Weighted average	%	87 5%	87 3%	87 1%	86 9%	86 7%	86 5%	86 3%	86 1%	85 9%	85 7%	85 5%

Calendar year		1995	1996	1997	1998	1999	2000	2001	2002	2003	2004	2005
TES 1 CHP Plant Electrical Rating w/o Rehabilitation												
@ Zero DH Load	MW gross	504 0	504 0	504 0	504 0	504 0	504 0	504 0	504 0	504 0	504 0	504 0
@ 35/ DH Load	MW gross	596 5	596 5	596 5	596 5	596 5	565 5	565 5	565 5	565 5	565 5	565 5
@ 75/ DH Load	MW gross	586 5	586 5	586 5	586 5	586 5	541 0	541 0	541 0	541 0	541 0	541 0
@ Full DH Load	MW gross	550 5	550 5	550 5	550 5	550 5	505 5	505 5	505 5	505 5	505 5	505 5
Change in TES 1 Electrical Rating w/ Rehabilitation												
@ Zero DH Load	MW gross	0 0	0 0	0 0	0 0	0 0	0 0	0 0	75 0	0 0	0 0	0 0
@ 35% DH Load	MW gross	0 0	0 0	0 0	0 0	0 0	0 0	0 0	54 0	0 0	0 0	0 0
@ 75/ DH Load	MW gross	0 0	0 0	0 0	0 0	0 0	0 0	0 0	99 4	0 0	0 0	0 0
@ Full DH Load	MW gross	0 0	0 0	0 0	0 0	0 0	0 0	0 0	90 0	0 0	0 0	0 0
TES 1 CHP Plant Electrical Rating w/ Rehabilitation												
@ Zero DH Load	MW gross	504 0	504 0	504 0	504 0	504 0	504 0	504 0	579 0	579 0	579 0	579 0
@ 35/ DH Load	MW gross	596 5	596 5	596 5	596 5	596 5	565 5	565 5	619 5	619 5	619 5	619 5
@ 75% DH Load	MW gross	586 5	586 5	586 5	586 5	586 5	541 0	541 0	640 4	640 4	640 4	640 4
@ Full DH Load	MW gross	550 5	550 5	550 5	550 5	550 5	505 5	505 5	595 5	595 5	595 5	595 5
Auxiliary power consumption	%	7 0%	7 0%	7 0%	7 0/	7 0%	7 0%	7 0/	7 0%	7 0%	7 0%	7 0%
@ Zero DH Load	MW net	468 7	468 7	468 7	468 7	468 7	468 7	468 7	468 7	468 7	468 7	468 7
@ 35/ DH Load	MW net	554 7	554 7	554 7	554 7	554 7	525 9	525 9	525 9	525 9	525 9	525 9
@ 75/ DH Load	MW net	545 4	545 4	545 4	545 4	545 4	503 1	503 1	503 1	503 1	503 1	503 1
@ Full DH Load	MW net	512 0	512 0	512 0	512 0	512 0	470 1	470 1	470 1	470 1	470 1	470 1
TES 1 CHP Plant DH/HW Rating												
@ Full DH Load (hot water only)	Gcal/hr	740 0	740 0	740 0	740 0	740 0	656 4	656 4	811 4	811 4	811 4	811 4
@ Full DH Load (total DH incl process steam)	Gcal/hr	1 151 8	1 151 8	1 151 8	1 151 8	1 151 8	1 064 8	1 064 8	1 219 8	1 219 8	1 219 8	1 219 8
TES-1 HOBs												
DH Capability Hot Water												
Unit #1	Gcal/hr	100 0	100 0	100 0	100 0	100 0	100 0	100 0	100 0	100 0	100 0	100 0
Unit #2	Gcal/hr	100 0	100 0	100 0	100 0	100 0	100 0	100 0	100 0	100 0	100 0	100 0
Unit #3	Gcal/hr	100.0	100.0	100.0	100.0	100.0	100 0	100.0	100.0	100.0	100.0	100.0
Total	Gcal/hr	300 0	300 0	300 0	300 0	300 0	300 0	300 0	300 0	300 0	300 0	300 0
Boiler Efficiencies												
Unit #1	%	87 0%	87 0%	87 0%	87 0%	87 0%	87 0%	87 0%	87 0%	87 0%	87 0%	87 0%
Unit #2	/	87 0/	87 0/	87 0%	87 0%	87 0%	87 0%	87 0/	87 0%	87 0%	87 0/	87 0%
Unit #3	%	87.0%	87.0%	87.0%	87.0%	87.0%	87.0%	87.0%	87.0%	87.0%	87.0%	87 0%
Weighted average	/	87 0/	87 0/	87 0/	87 0/	87 0%	87 0/	87 0%	87 0%	87 0%	87 0%	87 0%
TES-2 HOBs												
DH Capability Hot Water												
Unit #1	Gcal/hr	96 0	96 0	96 0	96 0	96 0	96 0	96 0	96 0	96 0	96 0	96 0
Unit #2	Gcal/hr	96.0	96.0	96.0	96.0	96.0	96.0	96.0	96.0	96.0	96.0	96.0
Total	Gcal/hr	192 0	192 0	192 0	192 0	192 0	192 0	192 0	192 0	192 0	192 0	192 0
Boiler Efficiencies												
Unit #1	%	87 0%	87 0%	87 0%	87 0%	87 0%	87 0%	87 0%	87 0%	87 0%	87 0%	87 0%
Unit #2	%	87.0%	87.0%	87.0%	87.0%	87.0%	87.0%	87.0%	87.0%	87.0%	87.0%	87.0%
Weighted average	%	87 0%	87 0%	87 0%	87 0%	87 0%	87 0%	87 0%	87 0%	87 0%	87 0/	87 0%
Local DH System												
Frunze Unit #1	Gcal/hr	50 0	50 0	50 0	50 0	50 0	50 0	50 0	50 0	50 0	50 0	0 0
Frunze Unit #2	Gcal/hr	50 0	50 0	50 0	50 0	50 0	50 0	50 0	50 0	50 0	50 0	0 0
Frunze Unit #3	Gcal/hr	50 0	50 0	50 0	50 0	50 0	50 0	50 0	50 0	50 0	50 0	0 0
JAL Unit #1	Gcal/hr	20 0	20 0	20 0	20 0	20 0	20 0	20 0	20 0	20 0	20 0	20 0
JAL Unit #2	Gcal/hr	20.0	20 0	20 0	20 0	20 0	20 0	20.0	20.0	20.0	20.0	20.0
Total	Gcal/hr	190 0	190 0	190 0	190 0	190 0	190 0	190 0	190 0	190 0	190 0	40 0
Largest Unit	Gcal/hr	50 0	50 0	50 0	50 0	50 0	50 0	50 0	50 0	50 0	50 0	20 0
New capacity additions												
Mazut fired	Gcal/hr	0 0	0 0	0 0	0 0	0 0	0 0	0 0	0 0	0 0	0 0	0 0
Gas fired	Gcal/hr	0 0	0 0	0 0	0 0	0 0	0 0	0 0	0 0	0 0	0 0	50 0

39?

Investment Schedules

Case Number 1 Base Assumptions

Summary of Investments

Study Year		1	2	3	4	5	6	7	8	9	10	11
Calendar Year		1995	1996	1997	1998	1999	2000	2001	2002	2003	2004	2005
Capital Expenditure Schedules												
Investment in Electric and Thermal Energy Supply												
Bishkek DH System												
TES 1 CHP Plant Rehabilitation	$000	0 0	0 0	0 0	0 0	0 0	0 0	0 0	0 0	0 0	0 0	0 0
Installation of new additional HOBs	$000	0 0	0 0	0 0	0 0	0 0	0 0	0 0	0 0	0 0	0 0	0 0
Local DH System												
Installation of new additional HOBs	$000	0 0	0 0	0 0	0 0	0 0	0 0	0 0	0 0	866 6	886 8	0 0
Bishkek Electric Supply												
New GTCC#1 75 MWe(net)	$000	0 0	0 0	0 0	0 0	0 0	0 0	0 0	0 0	0 0	0 0	0 0
New TG for TES 1 83 7 MWe(net)	$000	0 0	0 0	0 0	0 0	0 0	12 618 8	12 712 7	0 0	0 0	0 0	0 0
Investment in Electric Energy Transmission & Distribution System												
Ala Archa220/110kV 200 MW grid uprating	$000	0 0	0 0	0 0	0 0	0 0	0 0	0 0	0 0	0 0	0 0	0 0
Investment in District Heating Distribution System												
District heating system upgrades rehab and modernization	$000	0 0	0 0	0 0	0 0	0 0	0 0	0 0	0 0	0 0	0 0	0 0
District heating system ugrades extension of HW network	$000	0 0	0 0	0 0	0 0	0 0	0 0	0 0	0 0	0 0	0 0	0 0
Rehabilitation of Steam Distribution Network	$000	0 0	0 0	0 0	0 0	0 0	0 0	0 0	0 0	0 0	0 0	0 0
TOTAL ANNUAL CAPITAL EXPENDITURE	$000	0 0	0 0	0 0	0 0	0 0	12 618 8	12 712 7	0 0	866 6	886 8	0 0
Debt Service Schedules												
Investment in Electric and Thermal Energy Supply												
Bishkek DH System												
TES 1 CHP Plant Rehabilitation	$000	0 0	0 0	0 0	0 0	0 0	0 0	0 0	0 0	0 0	0 0	0 0
Installation of new additional HOBs	$000	0 0	0 0	0 0	0 0	0 0	0 0	0 0	0 0	0 0	0 0	0 0
Local DH System												
Installation of new additional HOBs	$000	0 0	0 0	0 0	0 0	0 0	0 0	0 0	0 0	0 0	0 0	278 5
Bishkek Electric Supply												
New GTCC#1 75 MWe(net)	$000	0 0	0 0	0 0	0 0	0 0	0 0	0 0	0 0	0 0	0 0	0 0
New TG for TES 1 83 7 MWe(net)	$000	0 0	0 0	0 0	0 0	0 0	0 0	0 0	5 321 4	5 321 4	5 321 4	5 321 4
Investment in Electric Energy Transmission & Distribution System												
Ala Archa220/110kV 200 MW grid uprating	$000	0 0	0 0	0 0	0 0	0 0	0 0	0 0	0 0	0 0	0 0	0 0
Investment in District Heating Distribution System												
District heating system upgrades rehab and modernization	$000	0 0	0 0	0 0	0 0	0 0	0 0	0 0	0 0	0 0	0 0	0 0
District heating system ugrades extension of HW network	$000	0 0	0 0	0 0	0 0	0 0	0 0	0 0	0 0	0 0	0 0	0 0
Rehabilitation of Steam Distribution Network	$000	0 0	0 0	0 0	0 0	0 0	0 0	0 0	0 0	0 0	0 0	0 0
TOTAL ANNUAL INVESTMENT COSTS	$000	0 0	0 0	0 0	0 0	0 0	0 0	0 0	5 321 4	5 321 4	5 321 4	5 321 4

Case 2

Summary of Costs

Case Number 2 Base Assumptions

Study Year		1	2	3	4	5	6	7	8	9	10	11
Calendar Year		1995	1996	1997	1998	1999	2000	2001	2002	2003	2004	2005
Production Costs												
Primary Energy Expenses												
Coal	$000	43 185	58 560	61 084	61 762	62 549	63 753	64 805	65 474	66 624	67 958	69 298
Mazut	$000	3 272	1 372	1 431	1 447	1 466	1 494	1 518	1 534	1 561	1 592	1 624
Natural gas	$000	15 421	4 255	3 198	2 786	1 874	1 531	1 429	873	814	792	785
Grid Electric	$000	7	20	46	82	129	566	732	85	135	191	268
Total primary energy	$000	61 884	64 207	65 760	66 076	66 017	67 343	68 484	67 966	69 134	70 533	71 975
Operating and Maintenance Expenses												
Bishkek TES 1 CHP Plant	$000	11 000	12 342	13 904	15 727	17 864	19 240	21 089	23 115	24 647	27 052	29 724
Bishkek TES 1 and TES 2 HOBs	$000	304	358	409	346	198	141	123	26	14	8	4
Industrial steam distribution system	$000	144	160	178	199	223	252	274	299	327	357	390
District heating distribution system	$000	3 000	3 049	3 006	2 915	2 805	2 939	2 981	3 022	3 062	3 101	3 139
New GTCC plant	$000	0	0	0	0	0	0	0	0	0	0	0
Local DH system HOBs	$000	184	216	0	0	0	0	0	0	0	0	0
Total O&M	$000	14 632	16 124	17 496	19 188	21 090	22 572	24 467	26 462	28 050	30 517	33 257
Total Production Costs	$000	76 515	80 331	83 256	85 264	87 107	89 915	92 951	94 428	97 184	101 051	105 232
Investments												
TES 1 Rehabilitation and New HOBs	$000	0	0	0	0	0	0	0	0	0	0	0
New Self generation Capacity	$000	0	0	0	0	0	12 619	12 713	0	0	0	0
District Heating System Rehabilitation	$000	0	2 898	14 786	8 913	3 150	0	0	0	0	0	0
New HOBs for Local DH System	$000	0	0	0	0	0	0	0	0	0	0	0
Total Investment	$000	0	2 898	14 786	8 913	3 150	12 619	12 713	0	0	0	0
Total Annual Cost	$000	76 515	83 229	98 043	94 177	90 257	102 534	105 664	94 428	97 184	101 051	105 232

NPV of Costs		thru 2005	thru 2014
Primary energy expense	$000	393 577	503 824
O&M expense	$000	125,225	185,251
Subtotal production costs	$000	518 801	689 075
Investments	$000	32,429	32,429
Total Annual Costs	$000	551 231	721 505
End effect Adjustment	$000	(7,351)	(7,351)
Total Effective Cost	$000	543 880	714 154

Allocation of Costs Case No 2 Base Assumptions

Study Year		1	2	3	4	5	6	7	8	9	10	11
Calendar Year		1995	1996	1997	1998	1999	2000	2001	2002	2003	2004	2005
Production Costs												
Fuel and Primary Energy Expenses												
Electric Account												
Bishkek TES 1 CHP fuel	$000	33 171	33 941	34 910	35 696	37 086	38 519	39 735	40 834	41 868	43 294	44 736
New GTCC fuel	$000	0	0	0	0	0	0	0	0	0	0	0
Grid electric for electric loads	$000	7	20	46	81	128	561	725	84	134	189	266
Total primary energy	$000	33 178	33 961	34 956	35 777	37 214	39 080	40 460	40 918	42 002	43 483	45 003
District Heating Account												
Bishkek TES 1 CHP fuel	$000	20 374	20 900	21 533	21 437	20 862	20 582	20 446	20 204	20 299	20 233	20 154
Bishkek TES 1 and TES 2 HOBs fuel	$000	1 942	2 251	2 526	2 106	1 185	829	715	152	80	43	21
Local DH system HOBs fuel	$000	1 178	1 359	0	0	0	0	0	0	0	0	0
Grid electric for pumping power	$000	0	0	1	1	1	5	6	1	1	1	2
GTCC fuel for pumping power	$000	0	0	0	0	0	0	0	0	0	0	0
Bishkek TES 1 CHP fuel for pumping power	$000	524	541	389	379	360	349	346	343	340	339	338
Total primary energy	$000	24 017	25 052	24 448	23 922	22,408	21 765	21 513	20 699	20 720	20 617	20 516
Process Steam Account												
Bishkek TES 1 CHP fuel	$000	4 689	5 194	6 356	6 377	6 395	6 498	6 511	6 348	6 412	6 434	6 456
Operating and Maintenance Expenses												
Electric Account												
Bishkek TES 1 CHP Plant	$000	8 250	9 256	10 428	11 796	13 398	14 430	15 817	17 336	18 486	20 289	22 293
New GTCC	$000	0	0	0	0	0	0	0	0	0	0	0
Total O&M	$000	8 250	9 256	10 428	11 796	13 398	14 430	15 817	17 336	18 486	20 289	22 293
District Heating Account												
Bishkek TES 1 CHP Plant	$000	1 375	1 543	1 738	1 966	2 233	2 405	2 636	2 889	3 081	3 381	3 716
Bishkek TES 1 and TES 2 HOBs	$000	304	358	409	346	198	141	123	26	14	8	4
District heating distribution system	$000	3 000	3 049	3 006	2 915	2 805	2 939	2 981	3 022	3 062	3 101	3 139
Local DH system HOBs	$000	184	216	0	0	0	0	0	0	0	0	0
Total O&M	$000	4 863	5 165	5 152	5 227	5 236	5 485	5 740	5 937	6 157	6 490	6 859
Process Steam Account												
Bishkek TES 1 CHP Plant	$000	1 375	1 543	1 738	1 966	2 233	2 405	2 636	2 889	3 081	3 381	3 716
Process steam distribution system	$000	144	160	178	199	223	252	274	299	327	357	390
Total O&M	$000	1 519	1 703	1 916	2 165	2 456	2 657	2 911	3 189	3 408	3 738	4 105
Debt Service												
Electric Account												
TES 1 CHP Plant Rehabilitation	$000	0	0	0	0	0	0	0	0	0	0	0
New Self generating Capacity	$000	0	0	0	0	0	0	0	5 321	5 321	5 321	5 321
Ala Archa220/110kV 200 MW grid uprating	$000	0	0	0	0	0	0	0	0	0	0	0
Total	$000	0	0	0	0	0	0	0	5 321	5 321	5 321	5 321
District Heating Account												
TES 1 CHP Plant Rehabilitation	$000	0	0	0	0	0	0	0	0	0	0	0
New HOBs for Bishkek DH System	$000	0	0	0	0	0	0	0	0	0	0	0
New HOBs for Local DH System	$000	0	0	0	0	0	0	0	0	0	0	0
District Heating System Rehabilitation	$000	0	0	574	3,505	5,272	5,896	5 896	5,896	5,896	5,896	5,896
Total	$000	0	0	574	3 505	5 272	5 896	5 896	5 896	5 896	5 896	5 896
Process Steam Account												
TES 1 CHP Plant Rehabilitation	$000	0	0	0	0	0	0	0	0	0	0	0
Steam Distribution System Rehabilitation	$000	0	0	0	0	0	0	0	0	0	0	0
Total	$000	0	0	0	0	0	0	0	0	0	0	0

Partial Tariffs Case No 2 Base Assumptions

Study Year		1	2	3	4	5	6	7	8	9	10	11
Calendar Year		1995	1996	1997	1998	1999	2000	2001	2002	2003	2004	2005
Electric Account												
Total production costs	$000	41 428	43 217	45 383	47 573	50 612	53 510	56 277	58 254	60 488	63 772	67 296
Total carrying charges	$000	0	0	0	0	0	0	0	5,321	5,321	5 321	5,321
Total cost of service	$000	41 428	43 217	45 383	47 573	50 612	53 510	56 277	63 576	65 809	69 093	72 617
Total sales of electricity	GWh	1 352 0	1 409 6	1 459 4	1 500 3	1 542 4	1 585 7	1 630 1	1 675 8	1 722 6	1 770 6	1 819 8
Partial tariff production costs	cents/kWh	3 06	3 07	3 11	3 17	3 28	3 37	3 45	3 48	3 51	3 60	3 70
Partial tariff carrying charges	cents/kWh	0 00	0 00	0 00	0 00	0 00	0 00	0 00	0 32	0 31	0 30	0 29
Partial tariff all costs	cents/kWh	3 06	3 07	3 11	3 17	3 28	3 37	3 45	3 79	3 82	3 90	3 99
District Heating Account												
Total production costs	$000	28 880	30 217	29 601	29 149	27 644	27 250	27 253	26 637	26 877	27 107	27 374
Total carrying charges	$000	0	0	574	3,505	5,272	5 896	5,896	5,896	5 896	5,896	5,896
Total cost of service	$000	28 880	30 217	30 175	32 655	32 916	33 146	33 149	32 533	32 773	33 003	33 271
Total sales of district heat	Tcal	2 093 6	2 208 0	2 285 0	2 273 0	2 230 0	2 209 0	2 188 0	2 168 0	2 148 0	2 128 0	2 108 0
Partial tariff production costs	$/Gcal	13 79	13 69	12 95	12 82	12 40	12 34	12 46	12 29	12 51	12 74	12 99
Partial tariff carrying charges	$/Gcal	0.00	0.00	0 25	1.54	2.36	2.67	2.69	2.72	2.75	2.77	2.80
Partial tariff all costs	$/Gcal	13 79	13 69	13 21	14 37	14 76	15 01	15 15	15 01	15 26	15 51	15 78
Process Steam Account												
Total production costs	$000	6 208	6 896	8 272	8 542	8 852	9 155	9 421	9 537	9 819	10 172	10 561
Total carrying charges	$000	0	0	0	0	0	0	0	0	0	0	0
Total cost of service	$000	6 208	6 896	8 272	8 542	8 852	9 155	9 421	9 537	9 819	10 172	10 561
Total sales of process steam	Tcal	400 0	450 0	550 0	550 0	550 0	550 0	550 0	550 0	550 0	550 0	550 0
Partial tariff production costs	$/Gcal	15 52	15 33	15 04	15 53	16 09	16 65	17 13	17 34	17 85	18 49	19 20
Partial tariff carrying charges	$/Gcal	0.00	0.00	0 00	0.00	0.00	0.00	0.00	0.00	0 00	0.00	0.00
Partial tariff all costs	$/Gcal	15 52	15 33	15 04	15 53	16 09	16 65	17 13	17 34	17 85	18 49	19 20

Input Data and Assumptions

Case Number			2	Base Assumptions
Thermal Energy Supply Source	0	TES 1 + HOBs		
Rehabilitate TES 1?	0	No		
Electric Energy Supply Source	0	TES 1 + Grid Electric		
Supplemental Electric Capacity	1	New GTCC		
District Heating Scenario	2	Scenario 2	= Modernization/rehabilitation	
Local DH supply by Bishkek DH?	0	No		
When?	1997	and beyond		

Study Year			1	2	3	4	5	6	7	8	9	10	11
Calendar Year			1995	1996	1997	1998	1999	2000	2001	2002	2003	2004	2005
Thermal Energy													
District Heating													
Maximum Demand													
Existing customers	generation basis	Gcal/hr	900 0	935 0	985 0	968 0	941 0	914 0	888 0	861 0	834 0	808 0	782 0
New customers	generation basis	Gcal/hr	46.0	53.0	0.0	0.0	0.0	0.0	0.0	0.0	0.0	0.0	0.0
Total	generation basis	Gcal/hr	946 0	988 0	985 0	968 0	941 0	914 0	888 0	861 0	834 0	808 0	782 0
Disposition of energy													
Existing customers	sales basis	Tcal	2 000 0	2 100 0	2 285 0	2 273 0	2 230 0	2 209 0	2 188 0	2 168 0	2 148 0	2 128 0	2 108 0
New customers	generation basis	Tcal	104 0	120 0	0 0	0 0	0 0	0 0	0 0	0 0	0 0	0 0	0 0
Contingency Requirements (LU or 15%)													
Bishkek DH System	15 0%	Gcal/hr	135 0	140 3	147 8	145 2	141 2	137 1	133 2	155 0	155 0	155 0	155 0
Local DH System	15 0%	Gcal/hr	50 0	50 0	0 0	0 0	0 0	0 0	0 0	0 0	0 0	0 0	0 0
District heating pipe losses													
Bishkek DH system		%	25 01%	25 00%	21 23%	19 99%	16 64%	13 95%	13 69%	13 80%	13 91%	14 02%	14 13%
Local DH system		%	10 00%	10 00%	10 00%	10 00%	10 00%	10 00%	10 00%	10 00%	10 00%	10 00%	10 00%
DH pumping at booster stations		kWh/Gcal	7 70	7 70	5 60	5 60	5 60	5 60	5 60	5 60	5 60	5 60	5 60
CHP plant piping efficiency		%	96 0%										
Process Steam													
Energy	generation basis	Tcal	571 4	642 9	785 7	785 7	785 7	785 7	785 7	785 7	785 7	785 7	785 7
Piping losses		%	30 00%	30 00%	30 00%	30 00%	30 00%	30 00%	30 00%	30 00%	30 00%	30 00%	30 00%
Ratio of annual maximum demand to annual average demand			2 0										
Heat exchange efficiency steam > hot water		Gcal/hr/Gcal/hr	1 0										
Electric Energy			1995	1996	1997	1998	1999	2000	2001	2002	2003	2004	2005
Maximum Demand local customers	generation basis	MW	425 0	434 2	443 6	453 3	463 1	473 2	483 4	493 9	504 6	515 6	526 8
annual growth		%		2 2%	2 2%	2 2%	2 2%	2 2%	2 2%	2 2%	2 2%	2 2%	2 2%
Disposition of energy local customers	sales basis	GWh	1 002 0	1 052 0	1 094 0	1 127 0	1 161 0	1 196 0	1 232 0	1 269 0	1 307 0	1 346 0	1 386 0
annual growth		%		5 0%	4 0%	3 0%	3 0%	3 0%	3 0%	3 0%	3 0%	3 0%	3 0%
T&D losses		%	12 0%	12 0%	12 0%	11 0%	11 0%	11 0%	11 0%	11 0%	10 0%	10 0%	10 0%
Contingency requirement (LU or 15% max)	15 0%	MW	80 0	81 6	83 0	84 8	86 6	88 4	90 3	92 2	94 2	96 2	98 3
Grid capability		MW	200 0	200 0	200 0	200 0	200 0	200 0	200 0	200 0	200 0	200 0	200 0
	esc after 2005												
Grid electricity price forecast	0 0%	$/kWh	0 0300	0 0300	0 0300	0 0300	0 0300	0 0300	0 0300	0 0300	0 0300	0 0300	0 0300
GTCC unit addition block size		MW	75 0										
GTCC capability		MW	0 0	0 0	0 0	0 0	0 0	0 0	0 0	0 0	0 0	0 0	0 0
GTCC fuel cost		$/kWh	0 0189	0 0189	0 0189	0 0189	0 0189	0 0189	0 0189	0 0189	0 0189	0 0189	0 0189
GTCC annual average heat rate		kcal/kWh	2 008 1										
Maximum Demand transfers	generation basis	MW	100 0	102 2	104 4	106 7	109 0	111 3	113 7	116 2	118 7	121 3	123 9
annual growth		%		2 2%	2 2%	2 2%	2 2%	2 2%	2 2%	2 2%	2 2%	2 2%	2 2%
Disposition of energy transfers	sales basis	GWh	350 0	357 6	365 4	373 3	381 4	389 7	398 1	406 8	415 6	424 6	433 8
annual growth		%		2 2%	2 2%	2 2%	2 2%	2 2%	2 2%	2 2%	2 2%	2 2%	2 2%
Fuel Price Forecast	esc after 2005												
Coal	0 0%	$/Gcal	8 80	8 80	8 80	8 80	8 80	8 80	8 80	8 80	8 80	8 80	8 80
Mazut	0 0%	$/Gcal	10 00	10 00	10 00	10 00	10 00	10 00	10 00	10 00	10 00	10 00	10 00
Natural Gas	0 0%	$/Gcal	9 40	9 40	9 40	9 40	9 40	9 40	9 40	9 40	9 40	9 40	9 40

Fuel Mix for Supply Resources		1995	1996	1997	1998	1999	2000	2001	2002	2003	2004	2005
TES 1 CHP boilers												
Coal	%	75 0%	97 0%	97 0%	97 0%	97 0%	97 0%	97 0%	97 0%	97 0%	97 0%	97 0%
Mazut	%	5 0%	2 0%	2 0%	2 0%	2 0%	2 0%	2 0%	2 0%	2 0%	2 0%	2 0%
Natural Gas	%	20 0%	1 0%	1 0%	1 0%	1 0%	1 0%	1 0%	1 0%	1 0%	1 0%	1 0%
Weighted average fuel price	$/Gcal	8 98	8 83	8 83	8 83	8 83	8 83	8 83	8 83	8 83	8 83	8 83
Bishkek HOBs												
Coal	%	0 0%	0 0%	0 0%	0 0%	0 0%	0 0%	0 0%	0 0%	0 0%	0 0%	0 0%
Mazut	%	0 0%	0 0%	0 0%	0 0%	0 0%	0 0%	0 0%	0 0%	0 0%	0 0%	0 0%
Natural Gas	%	100 0%	100 0%	100 0%	100 0%	100 0%	100 0%	100 0%	100 0%	100 0%	100 0%	100 0%
Weighted average fuel price	$/Gcal	9 40	9 40	9 40	9 40	9 40	9 40	9 40	9 40	9 40	9 40	9 40
Local DH Boilers												
Coal	%	0 0%	0 0%	0 0%	0 0%	0 0%	0 0%	0 0%	0 0%	0 0%	0 0%	0 0%
Mazut	%	0 0%	0 0%	0 0%	0 0%	0 0%	0 0%	0 0%	0 0%	0 0%	0 0%	0 0%
Natural Gas	%	100 0%	100 0%	100 0%	100 0%	100 0%	100 0%	100 0%	100 0%	100 0%	100 0%	100 0%
Weighted average fuel price	$/Gcal	9 40	9 40	9 40	9 40	9 40	9 40	9 40	9 40	9 40	9 40	9 40

Boiler efficiencies		1995	1996	1997	1998	1999	2000	2001	2002	2003	2004	2005
Bishkek CHP boilers (TES 1)		87 5%	87 3%	87 1%	86 9%	86 7%	86 5%	86 3%	86 1%	85 9%	85 7%	85 5%
Bishkek HOBs (TES 1 and TES 2)	%	89 0%	89 0%	89 0%	89 0%	89 0%	89 0%	89 0%	89 0%	89 0%	89 0%	89 0%
Local HOBs (Frunze JAL)												
Coal	%	0 0%	0 0%	0 0%	0 0%	0 0%	0 0%	0 0%	0 0%	0 0%	0 0%	0 0%
Mazut	%	89 0%	89 0%	89 0%	89 0%	89 0%	89 0%	89 0%	89 0%	89 0%	89 0%	89 0%
Natural gas	%	83 0%	83 0%	83 0%	83 0%	83 0%	83 0%	83 0%	83 0%	83 0%	83 0%	83 0%
Weighted average	*%*	*83 0%*	*83 0%*	*83 0%*	*83 0%*	*83 0%*	*83 0%*	*83 0%*	*83 0%*	*83 0%*	*83 0%*	*83 0%*
Process steam generation	Gcal/hr add l heat input per Gcal/hr steam	0 63	0 63	0 63	0 63	0 63	0 64	0 64	0 64	0 64	0 64	0 64

Performance Degradation		
Annual change in boiler efficiency	%	-0 20%
Annual change in electric capability	%	0 10%

Fuel Allocation for Cogeneration Energy		
Methodology #A CHP advantage devoted to DH energy		
Electric power only production efficiency	%	30 0%
Methodology #B CHP advantage devoted to electric energy		
Distric heat only production efficiency	%	87 0%
Allocation Factors for TES 1 CHP Plant O&M and Investment		
% allocated to electric production	%	75 0%
% allocated to district heating production	%	12 5%
% allocated to process steam production	%	12 5%

Economic and Financial Parameters		1995 2000	2001 2014
Capital cost real escalation rates			
Western	%	0 00%	0 00%
Russian	%	0 00%	0 00%
Kyrgyz labor	%	16 90%	6 60%
Kyrgyz material	%	1 70%	0 90%
Kyrgyz equipment	%	1 50%	3 20%
Discount Rate for NPV Calculation	%	12 00%	
Physical contingencies + technical assistance & training	% of direct costs	12 50%	

Composite escalation factors											
Western	1 000	1 000	1 000	1 000	1 000	1 000	1 000	1 000	1 000	1 000	1 000
Russian	1 000	1 000	1 000	1 000	1 000	1 000	1 000	1 000	1 000	1 000	1 000
Kyrgyz labor	1 000	1 169	1 367	1 598	1 867	2 183	2 327	2 481	2 645	2 819	3 005
Kyrgyz material	1 000	1 017	1 034	1 052	1 070	1 088	1 098	1 108	1 118	1 128	1 138
Kyrgyz equipment	1 000	1 015	1 030	1 046	1 061	1 077	1 112	1 147	1 184	1 222	1 261

Case Number 2 Base Assumptions

Load Forecast Development

Study Year		1	2	3	4	5	6	7	8	9	10	11
Calendar Year		1995	1996	1997	1998	1999	2000	2001	2002	2003	2004	2005
District heating pipe losses												
Bishkek DH system	/	25 01%	25 00%	21 23 /	19 99%	16 64 /	13 95%	13 69%	13 80%	13 91%	14 02 %	14 13 /
Local DH system	/	10 00%	10 00 /	10 00%	10 00%	10 00 %	10 00 /	10 00 /	10 00 /	10 00 /	10 00 /	10 00%
T&D losses (in Bishkek)	/	12 0%	12 0 %	12 0 /	11 0 /	11 0 /	11 0%	11 0 /	11 0%	10 0%	10 0%	10 0 /
Thermal Energy												
Bishkek DH System Hot Water												
Maximum Demand (generation basis)												
Existing customers	Gcal/hr	900 0	935 0	985 0	968 0	941 0	914 0	888 0	861 0	834 0	808 0	782 0
New customers	Gcal/hr	0.0	0.0	0.0	0.0	0.0	0.0	0.0	0.0	0.0	0.0	0.0
Total Maximum Demand	*Gcal/hr*	*900 0*	*935 0*	*985 0*	*968 0*	*941 0*	*914 0*	*888 0*	*861 0*	*834 0*	*808 0*	*782 0*
Disposition of Energy												
Existing customers	Tcal	2 000 0	2 100 0	2 285 0	2 273 0	2 230 0	2 209 0	2 188 0	2 168 0	2 148 0	2 128 0	2 108 0
New customers	Tcal	0.0	0.0	0.0	0.0	0.0	0.0	0.0	0.0	0.0	0.0	0.0
Total (sales basis)	Tcal	2 000 0	2 100 0	2 285 0	2 273 0	2 230 0	2 209 0	2 188 0	2 168 0	2 148 0	2 128 0	2 108 0
Distribution losses												
Existing customers	Tcal	667 0	700 0	615 9	567 9	445 1	358 1	347 0	347 1	347 1	347 0	346 9
New customers	Tcal	0.0	0.0	0.0	0.0	0.0	0.0	0.0	0.0	0.0	0.0	0.0
Total Disposition of Energy	*Tcal*	*2 667 0*	*2 800 0*	*2 900 9*	*2 840 9*	*2 675 1*	*2 567 1*	*2 535 0*	*2 515 1*	*2 495 1*	*2 475 0*	*2 454 9*
Bishkek DH System Process Steam												
Energy generation basis	Tcal	571 4	642 9	785 7	785 7	785 7	785 7	785 7	785 7	785 7	785 7	785 7
Energy sales basis	Tcal	400 0	450 0	550 0	550 0	550 0	550 0	550 0	550 0	550 0	550 0	550 0
Local DH System Hot Water												
Maximum Demand (generation basis)	Gcal/hr	46 0	53 0	0 0	0 0	0 0	0 0	0 0	0 0	0 0	0 0	0 0
Disposition of Energy												
Existing customers	Tcal	93 6	108 0	0 0	0 0	0 0	0 0	0 0	0 0	0 0	0 0	0 0
Distribution losses	Tcal	10.4	12.0	0.0	0.0	0.0	0.0	0.0	0.0	0.0	0.0	0.0
Total Disposition of Energy	*Tcal*	104 0	120 0	0 0	0 0	0 0	0 0	0 0	0 0	0 0	0 0	0 0
Electric Energy												
Maximum Demand (generation basis)												
Local customers	MW	425 0	434 2	443 6	453 3	463 1	473 2	483 4	493 9	504 6	515 6	526 8
Transfers	MW	100 0	102 2	104 4	106 7	109 0	111 3	113 7	116 2	118 7	121 3	123 9
DH pumping power	MW	7.3	7.6	5.5	5.4	5.3	5.1	5.0	4.8	4.7	4.5	4.4
Total Maximum Demand	*MW*	*532 3*	*544 0*	*553 5*	*565 3*	*577 3*	*589 6*	*602 1*	*615 0*	*628 0*	*641 4*	*655 1*
Disposition of Energy												
Local customers (sales basis)	GWh	1 002 0	1 052 0	1 094 0	1 127 0	1 161 0	1 196 0	1 232 0	1 269 0	1 307 0	1 346 0	1 386 0
Transfers	GWh	350 0	357 6	365 4	373 3	381 4	389 7	398 1	406 8	415 6	424 6	433 8
DH pumping power	GWh	21.3	22.5	16.2	15.9	15.0	14.4	14.2	14.1	14.0	13.9	13.7
Total consumption	GWh	1 373 3	1 432 1	1 475 6	1 516 2	1 557 4	1 600 0	1 644 3	1 689 8	1 736 6	1 784 5	1 833 6
T&D losses	GWh	187.3	195.3	201.2	187.4	192.5	197.8	203.2	208.9	193.0	198.3	203.7
Total Disposition of Energy	*GWh*	*1 560 6*	*1 627 4*	*1 676 8*	*1 703 6*	*1 749 8*	*1 797 8*	*1 847 5*	*1 898 7*	*1 929 5*	*1 982 7*	*2 037 3*

Summary of Load Forecasts (generation basis)

Calendar Year		1995	1996	1997	1998	1999	2000	2001	2002	2003	2004	2005
Thermal Load to be Served by Bishkek DH System												
Maximum Demand Hot Water	Gcal/hr	900 0	935 0	985 0	968 0	941 0	914 0	888 0	861 0	834 0	808 0	782 0
Thermal Energy Hot Water	Tcal	2 667 0	2 800 0	2 900 9	2 840 9	2 675 1	2 567 1	2 535 0	2 515 1	2 495 1	2 475 0	2 454 9
Maximum Demand Process Steam	Gcal/hr	130 5	146 8	179 4	179 4	179 4	179 4	179 4	179 4	179 4	179 4	179 4
Thermal Energy Process Steam	Tcal	571 4	642 9	785 7	785 7	785 7	785 7	785 7	785 7	785 7	785 7	785 7
Thermal Load to be Served by Local DH System												
Maximum Demand Hot Water	Gcal/hr	46 0	53 0	0 0	0 0	0 0	0 0	0 0	0 0	0 0	0 0	0 0
Thermal Energy Hot Water	Tcal	104 0	120 0	0 0	0 0	0 0	0 0	0 0	0 0	0 0	0 0	0 0
Maximum Demand Process Steam	Gcal/hr	0 0	0 0	0 0	0 0	0 0	0 0	0 0	0 0	0 0	0 0	0 0
Thermal Energy Process Steam	Tcal	0 0	0 0	0 0	0 0	0 0	0 0	0 0	0 0	0 0	0 0	0 0
Total Thermal Load to be Served												
Maximum Demand Hot Water	Gcal/hr	946 0	988 0	985 0	968 0	941 0	914 0	888 0	861 0	834 0	808 0	782 0
Thermal Energy Hot Water	Tcal	2 771 0	2 920 0	2 900 9	2 840 9	2 675 1	2 567 1	2 535 0	2 515 1	2 495 1	2 475 0	2 454 9
Maximum Demand Process Steam	Gcal/hr	130 5	146 8	179 4	179 4	179 4	179 4	179 4	179 4	179 4	179 4	179 4
Thermal Energy Process Steam	Tcal	571 4	642 9	785 7	785 7	785 7	785 7	785 7	785 7	785 7	785 7	785 7
Total Electric Load Forecast												
Maximum Demand	MW	532 3	544 0	553 5	565 3	577 3	589 6	602 1	615 0	628 0	641 4	655 1
Electric Energy	GWh	1,560 6	1,627 4	1,676 8	1,703 6	1,749 8	1,797 8	1,847 5	1,898 7	1,929 5	1,982 7	2,037 3

Load/Capacity Balance Case No 2 Base Assumptions add TG11 in 2002

Study Year		1	2	3	4	5	6	7	8	9	10	11
Calendar Year		1995	1996	1997	1998	1999	2000	2001	2002	2003	2004	2005
Electric Energy												
Maximum Demand	MW	532 3	544 0	553 5	565 3	577 3	589 6	602 1	615 0	628 0	641 4	655 1
Existing capacity resources												
TES 1 CHP Plant	MW	550 5	549 9	549 4	548 9	548 3	506 1	505 6	505 1	588 2	587 6	587 0
Grid electric capacity	MW	200 0	200 0	200 0	200 0	200 0	200 0	200 0	200 0	200 0	200 0	200 0
GTCC	MW	0.0	0.0	0.0	0.0	0.0	0.0	0.0	0.0	0.0	0.0	0.0
Total capacity resources before additions	MW	750 5	749 9	749 4	748 9	748 3	706 1	705 6	705 1	788 2	787 6	787 0
% reserve before capacity additions	%	41 0%	37 9%	35 4%	32 5%	29 6%	19 8%	17 2%	14 7%	25 5%	22 8%	20 1%
Capacity resources required	MW	612 3	625 6	636 6	650 1	663 9	678 0	692 5	707 2	722 2	737 6	753 4
Additional capacity required (minimum)	MW	0 0	0 0	0 0	0 0	0 0	0 0	0 0	2 1	0 0	0 0	0 0
Capacity additions/retirements												
TES 1 CHP Rehabilitation (install TG11 or equiv)	MW	0 0	0 0	0 0	0 0	0 0	0 0	0 0	83 7	0 0	0 0	0 0
TES 1 CHP Retirement of Unit 1 and 2	MW	0 0	0 0	0 0	0 0	(41 7)	0 0	0 0	0 0	0 0	0 0	0 0
Grid electric capacity additions	MW	0 0	0 0	0 0	0 0	0 0	0 0	0 0	0 0	0 0	0 0	0 0
GTCC capacity additions	MW	0 0	0 0	0 0	0 0	0 0	0 0	0 0	0 0	0 0	0 0	0 0
Total capacity resources after additions	MW	750 5	749 9	749 4	748 9	748 3	706 1	705 6	788 8	788 2	787 6	787 0
% reserve after capacity additions	%	41 0%	37 9%	35 4%	32 5%	29 6%	19 8%	17 2%	28 3%	25 5%	22 8%	20 1%
Thermal Energy - Hot Water												
Bishkek DH System												
Maximum Demand	Gcal/hr	900 0	935 0	985 0	968 0	941 0	914 0	888 0	861 0	834 0	808 0	782 0
Existing capacity resources												
TES 1 CHP Plant												
nominal HW capacity	Gcal/hr	740 0	740 0	740 0	740 0	740 0	656 4	656 4	811 4	811 4	811 4	811 4
peaking HW capacity	Gcal/hr	281.3	265.0	232.4	232.4	232.4	229.0	229.0	229.0	229.0	229.0	229.0
total	Gcal/hr	1 021 3	1 005 0	972 4	972 4	972 4	885 4	885 4	1 040 4	1 040 4	1 040 4	1 040 4
TES 1HOBs	Gcal/hr	300 0	300 0	300 0	300 0	300 0	300 0	300 0	300 0	300 0	300 0	300 0
TES 2 HOBs	Gcal/hr	192 0	192 0	192 0	192 0	192 0	192 0	192 0	192 0	192 0	192 0	192 0
Existing HOBs Frunze	Gcal/hr	0 0	0 0	150 0	150 0	150 0	150 0	150 0	150 0	150 0	150 0	0 0
Existing HOBs JAL	Gcal/hr	0 0	0 0	40 0	40 0	40 0	40 0	40 0	40 0	40 0	40 0	40 0
New HOBs in local DH system	Gcal/hr	0.0	0.0	0.0	0.0	0.0	0.0	0.0	0.0	0.0	0.0	0.0
Total capacity resources before additions	Gcal/hr	1 513 3	1 497 0	1 654 4	1 654 4	1 654 4	1 567 4	1 567 4	1 722 4	1 722 4	1 722 4	1 572 4
% reserve before capacity additions	%	68 1%	60 1%	68 0%	70 9%	75 8%	71 5%	76 5%	100 0%	106 5%	113 2%	101 1%
Capacity resources required	Gcal/hr	1 035 0	1 075 3	1 132 8	1 113 2	1 082 2	1 051 1	1 021 2	1 016 0	989 0	963 0	937 0
Additional capacity required (minimum)	Gcal/hr	0 0	0 0	0 0	0 0	0 0	0 0	0 0	0 0	0 0	0 0	0 0
Capacity additions/retirements												
New HOB capacity	Gcal/hr	0 0	0 0	0 0	0 0	0 0	0 0	0 0	0 0	0 0	0 0	0 0
Total capacity resources after additions	Gcal/hr	1 513 3	1 497 0	1 654 4	1 654 4	1 654 4	1 567 4	1 567 4	1 722 4	1 722 4	1 722 4	1 572 4
% reserve after capacity additions	%	68 1%	60 1%	68 0%	70 9%	75 8%	71 5%	76 5%	100 0%	106 5%	113 2%	101 1%
Local DH System												
Maximum Demand	Gcal/hr	46 0	53 0	0 0	0 0	0 0	0 0	0 0	0 0	0 0	0 0	0 0
Existing capacity resources												
Existing HOBs Frunze	Gcal/hr	150 0	150 0	0 0	0 0	0 0	0 0	0 0	0 0	0 0	0 0	0 0
Existing HOBs JAL	Gcal/hr	40 0	40 0	0 0	0 0	0 0	0 0	0 0	0 0	0 0	0 0	0 0
New HOBs capacity additions	Gcal/hr	0.0	0.0	0.0	0.0	0.0	0.0	0.0	0.0	0.0	0.0	0.0
Total capacity resources before additions	Gcal/hr	190 0	190 0	0 0	0 0	0 0	0 0	0 0	0 0	0 0	0 0	0 0
% reserve before capacity additions	%	313 0%	258 5%	n/a	n/a	n/a	n/a	n/a	n/a	n/a	n/a	n/a
Capacity resources required	Gcal/hr	96 0	103 0	0 0	0 0	0 0	0 0	0 0	0 0	0 0	0 0	0 0
Additional capacity required (minimum)	Gcal/hr	0 0	0 0	0 0	0 0	0 0	0 0	0 0	0 0	0 0	0 0	0 0
Capacity additions/retirements												
New HOB capacity	Gcal/hr	0 0	0 0	0 0	0 0	0 0	0 0	0 0	0 0	0 0	0 0	0 0
Frunze boiler retirements	Gcal/hr	0.0	0.0	0.0	0.0	0.0	0.0	0.0	0.0	0.0	0.0	0.0
Total capacity resources after additions	Gcal/hr	190 0	190 0	0 0	0 0	0 0	0 0	0 0	0 0	0 0	0 0	0 0
% reserve after capacity additions	%	313 0%	258 5%	n/a	n/a	n/a	n/a	n/a	n/a	n/a	n/a	n/a
Thermal Energy - Process Steam												
Maximum Demand	Gcal/hr	130 5	146 8	179 4	179 4	179 4	179 4	179 4	179 4	179 4	179 4	179 4
Existing capacity resources (TES 1 CHP)	Gcal/hr	411 8	411 8	411 8	411 8	411 8	408 4	408 4	408 4	408 4	408 4	408 4
% reserve	%	215 6%	180 6%	129 6%	129 6%	129 6%	127 7%	127 7%	127 7%	127 7%	127 7%	127 7%

Energy Production/Fuel Consumption Summary

Case Number 2 Base Assumptions

Study Year		1	2	3	4	5	6	7	8	9	10	11
Calendar Year		1995	1996	1997	1998	1999	2000	2001	2002	2003	2004	2005
Energy Production												
Electric Energy Generation												
Bishkek CHP Plant (TES 1)	GWh	1 560 4	1 626 7	1 675 3	1 700 9	1 745 5	1 778 9	1 823 2	1 895 9	1 925 0	1 976 4	2 028 3
Grid electric	GWh	0 2	0 7	1 5	2 7	4 3	18 9	24 4	2 8	4 5	6 4	8 9
GTCC	GWh	0.0	0.0	0.0	0.0	0.0	0.0	0.0	0.0	0.0	0.0	0.0
Total	GWh	1 560 6	1 627 4	1 676 8	1 703 6	1 749 8	1 797 8	1 847 5	1 898 7	1 929 5	1 982 7	2 037 3
Thermal Energy Generation												
Distric heating (heat, hot water)												
Bishkek CHP Plant (TES 1)	Tcal	2 483 2	2 586 9	2 661 7	2 641 5	2 563 0	2 488 6	2 467 3	2 500 7	2 487 5	2 470 9	2 452 8
Bishkek HOBs (TES 1 and TES 2)	Tcal	183 9	213 1	239 1	199 4	112 2	78 5	67 7	14 4	7 6	4 1	2 0
Local DH System HOBs	Tcal	104.0	120.0	0.0	0.0	0.0	0.0	0.0	0.0	0.0	0.0	0.0
Total	Tcal	2 771 0	2 920 0	2 900 9	2 840 9	2 675 1	2 567 1	2 535 0	2 515 1	2 495 1	2 475 0	2 454 9
Process steam												
Bishkek DH system (TES 1)	Tcal	571 4	642 9	785 7	785 7	785 7	785 7	785 7	785 7	785 7	785 7	785 7
Fuel Consumption												
Bishkek DH System												
Coal	Tcal	4 907 4	6 654 5	6 941 4	7 018 4	7 107 9	7 244 6	7 364 2	7 440 2	7 570 9	7 722 5	7 874 8
Mazut	Tcal	327 2	137 2	143 1	144 7	146 6	149 4	151 8	153 4	156 1	159 2	162 4
Natural gas	Tcal	1,515.2	308.1	340.2	296.4	199.3	162.9	152.0	92.9	86.6	84.2	83.5
Total	Tcal	6 749 7	7 099 8	7 424 8	7 459 4	7 453 7	7 556 9	7 668 1	7 686 5	7 813 6	7 966 0	8 120 6
Local DH System												
Coal	Tcal	0 0	0 0	0 0	0 0	0 0	0 0	0 0	0 0	0 0	0 0	0 0
Mazut	Tcal	0 0	0 0	0 0	0 0	0 0	0 0	0 0	0 0	0 0	0 0	0 0
Natural gas	Tcal	125.3	144.6	0.0	0.0	0.0	0.0	0.0	0.0	0.0	0.0	0.0
Total	Tcal	125 3	144 6	0 0	0 0	0 0	0 0	0 0	0 0	0 0	0 0	0 0
GTCC natural gas	Tcal	0 0	0 0	0 0	0 0	0 0	0 0	0 0	0 0	0 0	0 0	0 0
Total Fuel Consumption	Tcal	6 875 0	7 244 4	7 424 8	7 459 4	7 453 7	7 556 9	7 668 1	7 686 5	7 813 6	7 966 0	8 120 6
/ by type												
Coal	%	71 4%	91 9%	93 5%	94 1%	95 4%	95 9%	96 0%	96 8%	96 9%	96 9%	97 0%
Mazut	%	4 8%	1 9%	1 9%	1 9%	2 0%	2 0%	2 0%	2 0%	2 0%	2 0%	2 0%
Natural gas	%	23.9%	6.2%	4.6%	4.0%	2.7%	2.2%	2.0%	1.2%	1.1%	1.1%	1.0%
Total	%	100 0%	100 0%	100 0%	100 0%	100 0%	100 0%	100 0%	100 0%	100 0%	100 0%	100 0%

Generating Resource Characteristics

Case Number 2 Base Assumptions

Study Year			1	2	3	4	5	6	7	8	9	10	11
Calendar Year			1995	1996	1997	1998	1999	2000	2001	2002	2003	2004	2005
TES 1 CHP Plant			1995	1996	1997	1998	1999	2000	2001	2002	2003	2004	2005
Electric Capability													
Unit #1		MW	35 0	35 0	35 0	35 0	35 0	0 0	0 0	0 0	0 0	0 0	0 0
Unit #2		MW	25 0	25 0	25 0	25 0	25 0	0 0	0 0	0 0	0 0	0 0	0 0
Unit #3		MW	50 0	50 0	50 0	50 0	50 0	50 0	50 0	50 0	50 0	50 0	50 0
Unit #4		MW	35 0	35 0	35 0	35 0	35 0	35 0	35 0	35 0	35 0	35 0	35 0
Unit #5		MW	35 0	35 0	35 0	35 0	35 0	35 0	35 0	35 0	35 0	35 0	35 0
Unit #6		MW	86 0	86 0	86 0	86 0	86 0	86 0	86 0	86 0	86 0	86 0	86 0
Unit #7		MW	60 0	60 0	60 0	60 0	60 0	60 0	60 0	60 0	60 0	60 0	60 0
Unit #8		MW	60 0	60 0	60 0	60 0	60 0	60 0	60 0	60 0	60 0	60 0	60 0
Unit #9		MW	86 0	86 0	86 0	86 0	86 0	86 0	86 0	86 0	86 0	86 0	86 0
Unit #10		MW	86 0	86 0	86 0	86 0	86 0	86 0	86 0	86 0	86 0	86 0	86 0
Unit #11	1	MW	0.0	0.0	0.0	0.0	0.0	0.0	0.0	90.0	90.0	90.0	90.0
Total		MW	558 0	558 0	558 0	558 0	558 0	498 0	498 0	588 0	588 0	588 0	588 0
Largest Unit		MW	86 0	86 0	86 0	86 0	86 0	86 0	86 0	90 0	90 0	90 0	90 0
		MW net	80 0	80 0	80 0	80 0	80 0	80 0	80 0	83 7	83 7	83 7	83 7
DH Capability Hot Water													
Unit #1		Gcal/hr	35 0	35 0	35 0	35 0	35 0	0 0	0 0	0 0	0 0	0 0	0 0
Unit #2		Gcal/hr	48 6	48 6	48 6	48 6	48 6	0 0	0 0	0 0	0 0	0 0	0 0
Unit #3		Gcal/hr	51 0	51 0	51 0	51 0	51 0	51 0	51 0	51 0	51 0	51 0	51 0
Unit #4		Gcal/hr	97 0	97 0	97 0	97 0	97 0	97 0	97 0	97 0	97 0	97 0	97 0
Unit #5		Gcal/hr	97 0	97 0	97 0	97 0	97 0	97 0	97 0	97 0	97 0	97 0	97 0
Unit #6		Gcal/hr	102 6	102 6	102 6	102 6	102 6	102 6	102 6	102 6	102 6	102 6	102 6
Unit #7		Gcal/hr	61 0	61 0	61 0	61 0	61 0	61 0	61 0	61 0	61 0	61 0	61 0
Unit #8		Gcal/hr	61 0	61 0	61 0	61 0	61 0	61 0	61 0	61 0	61 0	61 0	61 0
Unit #9		Gcal/hr	102 6	102 6	102 6	102 6	102 6	102 6	102 6	102 6	102 6	102 6	102 6
Unit #10		Gcal/hr	103 0	103 0	103 0	103 0	103 0	103 0	103 0	103 0	103 0	103 0	103 0
Unit #11		Gcal/hr	0.0	0.0	0.0	0.0	0.0	0.0	0.0	155.0	155.0	155.0	155.0
Total		Gcal/hr	758 8	758 8	758 8	758 8	758 8	675 2	675 2	830 2	830 2	830 2	830 2
Largest Unit		Gcal/hr	103 0	103 0	103 0	103 0	103 0	103 0	103 0	155 0	155 0	155 0	155 0
Boiler Efficiencies			1999	2003									
w/o Rehabilitation		%	87 5%										
w/Rehabilitation		%	89 5%										
Boiler #14		%	87 5%	87 3%	87 1%	86 9%	86 7%	86 5%	86 3%	86 1%	85 9%	85 7%	85 5%
Boiler #15		%	87 5%	87 3%	87 1%	86 9%	86 7%	86 5%	86 3%	86 1%	85 9%	85 7%	85 5%
Boiler #16		%	87 5%	87 3%	87 1%	86 9%	86 7%	86 5%	86 3%	86 1%	85 9%	85 7%	85 5%
Boiler #17		%	87 5%	87 3%	87 1%	86 9%	86 7%	86 5%	86 3%	86 1%	85 9%	85 7%	85 5%
Boiler #18		%	87 5%	87 3%	87 1%	86 9%	86 7%	86 5%	86 3%	86 1%	85 9%	85 7%	85 5%
Boiler #19		%	87 5%	87 3%	87 1%	86 9%	86 7%	86 5%	86 3%	86 1%	85 9%	85 7%	85 5%
Boiler #20		%	87 5%	87 3%	87 1%	86 9%	86 7%	86 5%	86 3%	86 1%	85 9%	85 7%	85 5%
Boiler #21		%	87 5%	87 3%	87 1%	86 9%	86 7%	86 5%	86 3%	86 1%	85 9%	85 7%	85 5%
Boiler #22		%	87 5%	87 3%	87 1%	86 9%	86 7%	86 5%	86 3%	86 1%	85 9%	85 7%	85 5%
Boiler #23		%	87 5%	87 3%	87 1%	86 9%	86 7%	86 5%	86 3%	86 1%	85 9%	85 7%	85 5%
Boiler #24		%	87.5%	87.3%	87.1%	86.9%	86.7%	86.5%	86.3%	86.1%	85.9%	85.7%	85.5%
Weighted average		%	87 5%	87 3%	87 1%	86 9%	86 7%	86 5%	86 3%	86 1%	85 9%	85 7%	85 5%

Calendar year		1995	1996	1997	1998	1999	2000	2001	2002	2003	2004	2005
TES 1 CHP Plant Electrical Rating w/o Rehabilitation												
@ Zero DH Load	MW gross	504 0	504 0	504 0	504 0	504 0	504 0	504 0	504 0	504 0	504 0	504 0
@ 35/ DH Load	MW gross	596 5	596 5	596 5	596 5	596 5	565 5	565 5	565 5	565 5	565 5	565 5
@ 75/ DH Load	MW gross	586 5	586 5	586 5	586 5	586 5	541 0	541 0	541 0	541 0	541 0	541 0
@ Full DH Load	MW gross	550 5	550 5	550 5	550 5	550 5	505 5	505 5	505 5	505 5	505 5	505 5
Change in TES 1 Electrical Rating w/ Rehabilitation												
@ Zero DH Load	MW gross	0 0	0 0	0 0	0 0	0 0	0 0	0 0	75 0	0 0	0 0	0 0
@ 35/ DH Load	MW gross	0 0	0 0	0 0	0 0	0 0	0 0	0 0	54 0	0 0	0 0	0 0
@ 75/ DH Load	MW gross	0 0	0 0	0 0	0 0	0 0	0 0	0 0	99 4	0 0	0 0	0 0
@ Full DH Load	MW gross	0 0	0 0	0 0	0 0	0 0	0 0	0 0	90 0	0 0	0 0	0 0
TES 1 CHP Plant Electrical Rating w/ Rehabilitation												
@ Zero DH Load	MW gross	504 0	504 0	504 0	504 0	504 0	504 0	504 0	579 0	579 0	579 0	579 0
@ 35/ DH Load	MW gross	596 5	596 5	596 5	596 5	596 5	565 5	565 5	619 5	619 5	619 5	619 5
@ 75/ DH Load	MW gross	586 5	586 5	586 5	586 5	586 5	541 0	541 0	640 4	640 4	640 4	640 4
@ Full DH Load	MW gross	550 5	550 5	550 5	550 5	550 5	505 5	505 5	595 5	595 5	595 5	595 5
Auxiliary power consumption	/	7 0%	7 0%	7 0%	7 0%	7 0%	7 0%	7 0%	7 0%	7 0%	7 0%	7 0%
@ Zero DH Load	MW net	468 7	468 7	468 7	468 7	468 7	468 7	468 7	468 7	468 7	468 7	468 7
@ 35/ DH Load	MW net	554 7	554 7	554 7	554 7	554 7	525 9	525 9	525 9	525 9	525 9	525 9
@ 75/ DH Load	MW net	545 4	545 4	545 4	545 4	545 4	503 1	503 1	503 1	503 1	503 1	503 1
@ Full DH Load	MW net	512 0	512 0	512 0	512 0	512 0	470 1	470 1	470 1	470 1	470 1	470 1
TES 1 CHP Plant DH/HW Rating												
@ Full DH Load (hot water only)	Gcal/hr	740 0	740 0	740 0	740 0	740 0	656 4	656 4	811 4	811 4	811 4	811 4
@ Full DH Load (total DH incl process steam)	Gcal/hr	1 151 8	1 151 8	1 151 8	1 151 8	1 151 8	1 064 8	1 064 8	1 219 8	1 219 8	1 219 8	1 219 8
TES-1 HOBs												
DH Capability Hot Water												
Unit #1	Gcal/hr	100 0	100 0	100 0	100 0	100 0	100 0	100 0	100 0	100 0	100 0	100 0
Unit #2	Gcal/hr	100 0	100 0	100 0	100 0	100 0	100 0	100 0	100 0	100 0	100 0	100 0
Unit #3	Gcal/hr	100.0	100.0	100.0	100.0	100.0	100.0	100.0	100.0	100.0	100.0	100.0
Total	Gcal/hr	300 0	300 0	300 0	300 0	300 0	300 0	300 0	300 0	300 0	300 0	300 0
Boiler Efficiencies												
Unit #1	/	87 0%	87 0%	87 0%	87 0%	87 0%	87 0%	87 0%	87 0%	87 0%	87 0%	87 0%
Unit #2	%	87 0%	87 0%	87 0%	87 0%	87 0/	87 0%	87 0%	87 0%	87 0%	87 0%	87 0%
Unit #3	%	87.0%	87.0%	87.0%	87.0%	87.0%	87.0%	87.0%	87.0%	87.0%	87.0%	87.0%
Weighted average	/	87 0%	87 0%	87 0%	87 0%	87 0%	87 0%	87 0/	87 0%	87 0%	87 0%	87 0%
TES-2 HOBs												
DH Capability Hot Water												
Unit #1	Gcal/hr	96 0	96 0	96 0	96 0	96 0	96 0	96 0	96 0	96 0	96 0	96 0
Unit #2	Gcal/hr	96.0	96.0	96.0	96.0	96.0	96.0	96.0	96.0	96.0	96.0	96.0
Total	Gcal/hr	192 0	192 0	192 0	192 0	192 0	192 0	192 0	192 0	192 0	192 0	192 0
Boiler Efficiencies												
Unit #1	/	87 0%	87 0%	87 0%	87 0%	87 0%	87 0%	87 0%	87 0%	87 0%	87 0%	87 0%
Unit #2	%	87.0%	87.0%	87.0%	87.0%	87.0%	87.0%	87.0%	87.0%	87.0%	87.0%	87.0%
Weighted average	/	87 0%	87 0%	87 0%	87 0%	87 0%	87 0%	87 0%	87 0%	87 0%	87 0%	87 0%
Local DH System												
Frunze Unit #1	Gcal/hr	50 0	50 0	50 0	50 0	50 0	50 0	50 0	50 0	50 0	50 0	0 0
Frunze Unit #2	Gcal/hr	50 0	50 0	50 0	50 0	50 0	50 0	50 0	50 0	50 0	50 0	0 0
Frunze Unit #3	Gcal/hr	50 0	50 0	50 0	50 0	50 0	50 0	50 0	50 0	50 0	50 0	0 0
JAL Unit #1	Gcal/hr	20 0	20 0	20 0	20 0	20 0	20 0	20 0	20 0	20 0	20 0	20 0
JAL Unit #2	Gcal/hr	20.0	20 0	20.0	20.0	20.0	20.0	20.0	20.0	20.0	20.0	20.0
Total	Gcal/hr	190 0	190 0	190 0	190 0	190 0	190 0	190 0	190 0	190 0	190 0	40 0
Largest Unit	Gcal/hr	50 0	50 0	50 0	50 0	50 0	50 0	50 0	50 0	50 0	50 0	20 0
New capacity additions												
Mazut fired	Gcal/hr	0 0	0 0	0 0	0 0	0 0	0 0	0 0	0 0	0 0	0 0	0 0
Gas fired	Gcal/hr	0 0	0 0	0 0	0 0	0 0	0 0	0 0	0 0	0 0	0 0	50 0

Investment Schedules

Case Number 2 Base Assumptions

Summary of Investments

Study Year		1	2	3	4	5	6	7	8	9	10	11
Calendar Year		1995	1996	1997	1998	1999	2000	2001	2002	2003	2004	2005
Capital Expenditure Schedules												
Investment in Electric and Thermal Energy Supply												
Bishkek DH System												
TES 1 CHP Plant Rehabilitation	$000	0 0	0 0	0 0	0 0	0 0	0 0	0 0	0 0	0 0	0 0	0 0
Installation of new additional HOBs	$000	0 0	0 0	0 0	0 0	0 0	0 0	0 0	0 0	0 0	0 0	0 0
Local DH System												
Installation of new additional HOBs	$000	0 0	0 0	0 0	0 0	0 0	0 0	0 0	0 0	0 0	0 0	0 0
Bishkek Electric Supply												
New GTCC#1 75 MWe(net)	$000	0 0	0 0	0 0	0 0	0 0	0 0	0 0	0 0	0 0	0 0	0 0
New TG for TES 1 83 7 MWe(net)	$000	0 0	0 0	0 0	0 0	0 0	12 618 8	12 712 7	0 0	0 0	0 0	0 0
Investment in Electric Energy Transmission & Distribution System												
Ala Archa220/110kV 200 MW grid uprating	$000	0 0	0 0	0 0	0 0	0 0	0 0	0 0	0 0	0 0	0 0	0 0
Investment in District Heating Distribution System												
District heating system upgrades rehab and modernization	$000	0 0	2 897 5	14 786 4	8 912 6	3 149 6	0 0	0 0	0 0	0 0	0 0	0 0
District heating system ugrades extension of HW network	$000	0 0	0 0	0 0	0 0	0 0	0 0	0 0	0 0	0 0	0 0	0 0
Rehabilitation of Steam Distribution Network	$000	0 0	0 0	0 0	0 0	0 0	0 0	0 0	0 0	0 0	0 0	0 0
TOTAL ANNUAL CAPITAL EXPENDITURE	$000	0 0	2 897 5	14 786 4	8 912 6	3 149 6	12 618 8	12 712 7	0 0	0 0	0 0	0 0
Debt Service Schedules												
Investment in Electric and Thermal Energy Supply												
Bishkek DH System												
TES 1 CHP Plant Rehabilitation	$000	0 0	0 0	0 0	0 0	0 0	0 0	0 0	0 0	0 0	0 0	0 0
Installation of new additional HOBs	$000	0 0	0 0	0 0	0 0	0 0	0 0	0 0	0 0	0 0	0 0	0 0
Local DH System												
Installation of new additional HOBs	$000	0 0	0 0	0 0	0 0	0 0	0 0	0 0	0 0	0 0	0 0	0 0
Bishkek Electric Supply												
New GTCC#1 75 MWe(net)	$000	0 0	0 0	0 0	0 0	0 0	0 0	0 0	0 0	0 0	0 0	0 0
New TG for TES 1 83 7 MWe(net)	$000	0 0	0 0	0 0	0 0	0 0	0 0	0 0	5 321 4	5 321 4	5 321 4	5 321 4
Investment in Electric Energy Transmission & Distribution System												
Ala Archa220/110kV 200 MW grid uprating	$000	0 0	0 0	0 0	0 0	0 0	0 0	0 0	0 0	0 0	0 0	0 0
Investment in District Heating Distribution System												
District heating system upgrades rehab and modernization	$000	0 0	0 0	574 4	3 505 3	5 272 0	5 896 3	5 896 3	5 896 3	5 896 3	5 896 3	5 896 3
District heating system ugrades extension of HW network	$000	0 0	0 0	0 0	0 0	0 0	0 0	0 0	0 0	0 0	0 0	0 0
Rehabilitation of Steam Distribution Network	$000	0 0	0 0	0 0	0 0	0 0	0 0	0 0	0 0	0 0	0 0	0 0
TOTAL ANNUAL INVESTMENT COSTS	$000	0 0	0 0	574 4	3 505 3	5 272 0	5 896 3	5 896 3	11 217 8	11 217 8	11 217 8	11 217 8

Case 3

Summary of Costs

Case Number		3	Base Assumptions									
Study Year		1	2	3	4	5	6	7	8	9	10	11
Calendar Year		1995	1996	1997	1998	1999	2000	2001	2002	2003	2004	2005
Production Costs												
Primary Energy Expenses												
Coal	$000	43 185	58 560	61 195	61 471	61 513	62 956	64 174	65 402	66 494	67 834	69 184
Mazut	$000	3 272	1 372	1 434	1 440	1 441	1 475	1 504	1 532	1 558	1 589	1 621
Natural gas	$000	15 421	4 255	4 555	4 399	4 109	3 419	3 220	3 054	2 921	2 882	2 875
Grid Electric	$000	7	20	52	0	0	28	54	91	143	212	318
Total primary energy	$000	61 884	64 207	67 236	67 310	67 064	67 878	68 952	70 080	71 116	72 517	73 998
Operating and Maintenance Expenses												
Bishkek TES 1 CHP Plant	$000	11 000	12 342	13 904	13 767	15 184	16 713	16 287	17 933	19 748	21 786	23 787
Bishkek TES 1 and TES 2 HOBs	$000	304	358	375	316	273	157	122	92	68	59	56
Industrial steam distribution system	$000	144	160	178	199	223	252	274	299	327	357	390
District heating distribution system	$000	3 000	3 150	3 327	3 517	3 738	3 981	4 127	4 293	4 457	4 643	4 829
New GTCC plant	$000	0	0	0	0	0	0	0	0	0	0	0
Local DH system HOBs	$000	184	216	253	296	301	306	309	312	315	318	320
Total O&M	$000	14 632	16 226	18 036	18 096	19 720	21 409	21 120	22 930	24 914	27 162	29 381
Total Production Costs	$000	76 516	80 433	85 272	85 406	86 784	89 287	90 072	93 010	96 030	99 679	103 379
Investments												
TES 1 Rehabilitation and New HOBs	$000	0	0	16 579	5 038	0	0	0	0	0	0	0
New Self generation Capacity	$000	0	0	0	0	0	0	0	0	0	0	0
District Heating System Rehabilitation	$000	0	0	0	0	0	0	0	0	0	0	0
New HOBs for Local DH System	$000	0	0	0	0	0	0	0	0	867	887	0
Total Investment	$000	0	0	16 579	5 038	0	0	0	0	867	887	0
Total Annual Cost	$000	76 516	80 433	101 851	90 444	86 784	89 287	90 072	93 010	96 896	100 566	103 379

NPV of Costs		thru 2005	thru 2014
Primary energy expense	$000	399 276	512 622
O&M expense	$000	117,364	170,085
Subtotal production costs	$000	516 640	682 706
Investments	$000	15,600	15,600
Total Annual Costs	$000	532 240	698 306
End effect Adjustment	$000	(7,425)	(7,425)
Total Effective Cost	$000	524 816	690 882

Allocation of Costs Case No 3 Base Assumptions

Study Year		1	2	3	4	5	6	7	8	9	10	11
Calendar Year		1995	1996	1997	1998	1999	2000	2001	2002	2003	2004	2005
Production Costs												
Fuel and Primary Energy Expenses												
Electric Account												
Bishkek TES 1 CHP fuel	$000	33 171	33 941	34 965	35 352	35 895	36 967	38 175	39 416	40 339	41 711	43 100
New GTCC fuel	$000	0	0	0	0	0	0	0	0	0	0	0
Grid electric for electric loads	$000	7	20	52	0	0	27	53	90	141	209	314
Total primary energy	$000	33 178	33 961	35 016	35 352	35 895	36 994	38 228	39 506	40 480	41 920	43 414
District Heating Account												
Bishkek TES 1 CHP fuel	$000	20 374	20 900	21 426	21 401	21 051	21 474	21 529	21 561	21 729	21 727	21 717
Bishkek TES 1 and TES 2 HOBs fuel	$000	1 942	2 251	2 318	1 921	1 631	925	713	533	388	334	312
Local DH system HOBs fuel	$000	1 178	1 359	1 563	1 801	1 801	1 801	1 801	1 801	1 801	1 801	1 801
Grid electric for pumping power	$000	0	0	1	0	0	0	1	1	2	3	4
GTCC fuel for pumping power	$000	0	0	0	0	0	0	0	0	0	0	0
Bishkek TES 1 CHP fuel for pumping power	$000	524	541	555	547	538	537	537	538	533	534	535
Total primary energy	$000	24 017	25 052	25 863	25 670	25 021	24 737	24 580	24 433	24 453	24 399	24 368
Process Steam Account												
Bishkek TES 1 CHP fuel	$000	4 689	5 194	6 357	6 289	6 148	6 146	6 143	6 141	6 183	6 198	6 215
Operating and Maintenance Expenses												
Electric Account												
Bishkek TES 1 CHP Plant	$000	8 250	9 256	10 428	10 326	11 388	12 534	12 215	13 450	14 811	16 339	17 840
New GTCC	$000	0	0	0	0	0	0	0	0	0	0	0
Total O&M	$000	8 250	9 256	10 428	10 326	11 388	12 534	12 215	13 450	14 811	16 339	17 840
District Heating Account												
Bishkek TES 1 CHP Plant	$000	1 375	1 543	1 738	1 721	1 898	2 089	2 036	2 242	2 468	2 723	2 973
Bishkek TES 1 and TES 2 HOBs	$000	304	358	375	316	273	157	122	92	68	59	56
District heating distribution system	$000	3 000	3 150	3 327	3 517	3 738	3 981	4 127	4 293	4 457	4 643	4 829
Local DH system HOBs	$000	184	216	253	296	301	306	309	312	315	318	320
Total O&M	$000	4 863	5 267	5 693	5 850	6 211	6 534	6 595	6 939	7 308	7 743	8 178
Process Steam Account												
Bishkek TES 1 CHP Plant	$000	1 375	1 543	1 738	1 721	1 898	2 089	2 036	2 242	2 468	2 723	2 973
Process steam distribution system	$000	144	160	178	199	223	252	274	299	327	357	390
Total O&M	$000	1 519	1 703	1 916	1 920	2 121	2 341	2 310	2 541	2 795	3 080	3 363
Debt Service												
Electric Account												
TES 1 CHP Plant Rehabilitation	$000	0	0	0	2 465	3 214	3 214	3 214	3 214	3 214	3 214	3 214
New Self generating Capacity	$000	0	0	0	0	0	0	0	0	0	0	0
Ala Archa220/110kV 200 MW grid uprating	$000	0	0	0	0	0	0	0	0	0	0	0
Total	$000	0	0	0	2 465	3 214	3 214	3 214	3 214	3 214	3 214	3 214
District Heating Account												
TES 1 CHP Plant Rehabilitation	$000	0	0	0	411	536	536	536	536	536	536	536
New HOBs for Bishkek DH System	$000	0	0	0	0	0	0	0	0	0	0	0
New HOBs for Local DH System	$000	0	0	0	0	0	0	0	0	0	0	279
District Heating System Rehabilitation	$000	0	0	0	0	0	0	0	0	0	0	0
Total	$000	0	0	0	411	536	536	536	536	536	536	814
Process Steam Account												
TES 1 CHP Plant Rehabilitation	$000	0	0	0	411	536	536	536	536	536	536	536
Steam Distribution System Rehabilitation	$000	0	0	0	0	0	0	0	0	0	0	0
Total	$000	0	0	0	411	536	536	536	536	536	536	536

Partial Tar Case No 3 Base Assump

Study Year		1	2	3	4	5	6	7	8	9	10	11
Calendar Year		1995	1996	1997	1998	1999	2000	2001	2002	2003	2004	2005
Electric Account												
Total production costs	$000	41 428	43 217	45 444	45 677	47 283	49 529	50 444	52 956	55 291	58 259	61 254
Total carrying charges	$000	0	0	0	2,465	3,214	3,214	3,214	3 214	3,214	3,214	3,214
Total cost of service	$000	41 428	43 217	45 444	48 142	50 497	52 742	53 657	56 169	58 504	61 473	64 468
Total sales of electricity	GWh	1 352 0	1 409 6	1 459 4	1 500 3	1 542 4	1 585 7	1 630 1	1 675 8	1 722 6	1 770 6	1 819 8
Partial tariff production costs	cents/kWh	3 06	3 07	3 11	3 04	3 07	3 12	3 09	3 16	3 21	3 29	3 37
Partial tariff carrying charges	cents/kWh	0 00	0 00	0 00	0 16	0 21	0 20	0 20	0 19	0 19	0 18	0 18
Partial tariff all costs	cents/kWh	3 06	3 07	3 11	3 21	3 27	3 33	3 29	3 35	3 40	3 47	3 54
District Heating Account												
Total production costs	$000	28 880	30 319	31 555	31 520	31 232	31 271	31 175	31 372	31 761	32 142	32 546
Total carrying charges	$000	0	0	0	411	536	536	536	536	536	536	814
Total cost of service	$000	28 880	30 319	31 555	31 931	31 767	31 807	31 710	31 908	32 296	32 678	33 360
Total sales of district heat	Tcal	2 093 6	2 208 0	2 289 2	2 292 1	2 277 1	2 262 1	2 246 1	2 231 1	2 216 1	2 201 1	2 185 1
Partial tariff production costs	$/Gcal	13 79	13 73	13 78	13 75	13 72	13 82	13 88	14 06	14 33	14 60	14 89
Partial tariff carrying charges	$/Gcal	0.00	0.00	0.00	0.18	0.24	0.24	0.24	0.24	0.24	0.24	0.37
Partial tariff all costs	$/Gcal	13 79	13 73	13 78	13 93	13 95	14 06	14 12	14 30	14 57	14 85	15 27
Process Steam Account												
Total production costs	$000	6 208	6 896	8 273	8 209	8 269	8 487	8 454	8 682	8 978	9 278	9 579
Total carrying charges	$000	0	0	0	411	536	536	536	536	536	536	536
Total cost of service	$000	6 208	6 896	8 273	8 619	8 805	9 023	8 989	9 217	9 514	9 814	10 114
Total sales of process steam	Tcal	400 0	450 0	550 0	550 0	550 0	550 0	550 0	550 0	550 0	550 0	550 0
Partial tariff production costs	$/Gcal	15 52	15 33	15 04	14 92	15 03	15 43	15 37	15 79	16 32	16 87	17 42
Partial tariff carrying charges	$/Gcal	0.00	0.00	0.00	0.75	0.97	0.97	0.97	0.97	0.97	0.97	0.97
Partial tariff all costs	$/Gcal	15 52	15 33	15 04	15 67	16 01	16 40	16 34	16 76	17 30	17 84	18 39

Input Data and Assumptions

Case Number			3	Base Assumptions
Thermal Energy Supply Source	1	TES 1 + HOBs		
Rehabilitate TES 1?	1	Yes		
Electric Energy Supply Source	1	TES 1 + Grid Electric		
Supplemental Electric Capacity	1	New GTCC		
District Heating Scenario	0	Scenario No Project	= No modernization no expansion only rehabilitation	
Local DH supply by Bishkek DH?	0	No		
When?	1997	and beyond		

Study Year			1	2	3	4	5	6	7	8	9	10	11
Calendar Year			1995	1996	1997	1998	1999	2000	2001	2002	2003	2004	2005
Thermal Energy													
District Heating													
Maximum Demand													
Existing customers	generation basis	Gcal/hr	900 0	935 0	950 0	924 0	897 0	870 0	850 0	826 0	802 0	778 0	754 0
New customers	generation basis	Gcal/hr	46.0	53.0	61.0	71.0	71.0	71.0	71.0	71.0	71.0	71.0	71.0
Total	generation basis	Gcal/hr	946 0	988 0	1 011 0	995 0	968 0	941 0	921 0	897 0	873 0	849 0	825 0
Disposition of energy													
Existing customers	sales basis	Tcal	2 000 0	2 100 0	2 165 0	2 149 0	2 134 0	2 119 0	2 103 0	2 088 0	2 073 0	2 058 0	2 042 0
New customers	generation basis	Tcal	104 0	120 0	138 0	159 0	159 0	159 0	159 0	159 0	159 0	159 0	159 0
Contingency Requirements (LU or 15%)													
Bishkek DH System	15 0%	Gcal/hr	135 0	140 3	142 5	155 0	155 0	155 0	155 0	155 0	155 0	155 0	155 0
Local DH System	15 0%	Gcal/hr	50 0	50 0	50 0	50 0	50 0	50 0	50 0	50 0	50 0	50 0	20 0
District heating pipe losses													
Bishkek DH system		/	25 01%	25 00%	24 51 /	24 75%	24 99%	25 20%	25 45 /	25 67%	25 91 /	26 13 /	26 41 /
Local DH system		/	10 00%	10 00%	10 00%	10 00%	10 00%	10 00%	10 00%	10 00%	10 00%	10 00%	10 00%
DH pumping at booster stations		kWh/Gcal	7 70	7 70	7 70	7 70	7 70	7 70	7 70	7 70	7 70	7 70	7 70
CHP plant piping efficiency		%	96 0%										
Process Steam													
Energy	generation basis	Tcal	571 4	642 9	785 7	785 7	785 7	785 7	785 7	785 7	785 7	785 7	785 7
Piping losses		/	30 00%	30 00%	30 00%	30 00%	30 00%	30 00%	30 00 /	30 00%	30 00%	30 00%	30 00%
Ratio of annual maximum demand to annual average demand			2 0										
Heat exchange efficiency steam --> hot water		Gcal/hr/Gcal/hr	1 0										
Electric Energy			1995	1996	1997	1998	1999	2000	2001	2002	2003	2004	2005
Maximum Demand local customers	generation basis	MW	425 0	434 2	443 6	453 3	463 1	473 2	483 4	493 9	504 6	515 6	526 8
annual growth		/		2 2 /	2 2 /	2 2%	2 2 /	2 2 /	2 2 /	2 2%	2 2 /	2 2 /	2 2%
Disposition of energy local customers	sales basis	GWh	1 002 0	1 052 0	1 094 0	1 127 0	1 161 0	1 196 0	1 232 0	1 269 0	1 307 0	1 346 0	1 386 0
annual growth		/		5 0%	4 0%	3 0%	3 0%	3 0%	3 0 /	3 0 /	3 0%	3 0 /	3 0%
T&D losses		%	12 0%	12 0%	12 0%	11 0%	11 0%	11 0%	11 0%	11 0%	10 0%	10 0%	10 0%
Contingency requirement (LU or 15% max)	15 0%	MW	80 0	81 6	83 4	85 1	86 9	88 8	90 6	92 6	94 5	96 5	98 6
Grid capability		MW	200 0	200 0	200 0	200 0	200 0	200 0	200 0	200 0	200 0	200 0	200 0
	esc after 2005												
Grid electricity price forecast	0 0%	$/kWh	0 0300	0 0300	0 0300	0 0300	0 0300	0 0300	0 0300	0 0300	0 0300	0 0300	0 0300
GTCC unit addition block size		MW	75 0										
GTCC capability		MW	0 0	0 0	0 0	0 0	0 0	0 0	0 0	0 0	0 0	0 0	0 0
GTCC fuel cost		$/kWh	0 0189	0 0189	0 0189	0 0189	0 0189	0 0189	0 0189	0 0189	0 0189	0 0189	0 0189
GTCC annual average heat rate		kcal/kWh	2 008 1										
Maximum Demand transfers	generation basis	MW	100 0	102 2	104 4	106 7	109 0	111 3	113 7	116 2	118 7	121 3	123 9
annual growth		/		2 2 /	2 2 /	2 2 /	2 2 /	2 2 /	2 2%	2 2 /	2 2 /	2 2 /	2 2 /
Disposition of energy transfers	sales basis	GWh	350 0	357 6	365 4	373 3	381 4	389 7	398 1	406 8	415 6	424 6	433 8
annual growth		/		2 2 /	2 2 /	2 2 /	2 2 /	2 2 /	2 2 /	2 2 /	2 2 /	2 2 /	2 2 /
Fuel Price Forecast	esc after 2005												
Coal	0 0 /	$/Gcal	8 80	8 80	8 80	8 80	8 80	8 80	8 80	8 80	8 80	8 80	8 80
Mazut	0 0%	$/Gcal	10 00	10 00	10 00	10 00	10 00	10 00	10 00	10 00	10 00	10 00	10 00
Natural Gas	0 0%	$/Gcal	9 40	9 40	9 40	9 40	9 40	9 40	9 40	9 40	9 40	9 40	9 40

Fuel Mix for Su[illegible]esources		1995	1996	19[illegible]	1998	1999	2000	2001	2002	2003	[illegible]	2005
TES 1 CHP boilers												
Coal	%	75 0%	97 0%	97 0%	97 0%	97 0%	97 0%	97 0%	97 0%	97 0%	97 0%	97 0%
Mazut	%	5 0%	2 0%	2 0%	2 0%	2 0%	2 0%	2 0%	2 0%	2 0%	2 0%	2 0%
Natural Gas	%	20 0%	1 0%	1 0%	1 0%	1 0%	1 0%	1 0%	1 0%	1 0%	1 0%	1 0%
Weighted average fuel price	$/Gcal	8 98	8 83	8 83	8 83	8 83	8 83	8 83	8 83	8 83	8 83	8 83
Bishkek HOBs												
Coal	%	0 0%	0 0%	0 0%	0 0%	0 0%	0 0%	0 0%	0 0%	0 0%	0 0%	0 0%
Mazut	%	0 0%	0 0%	0 0%	0 0%	0 0%	0 0%	0 0%	0 0%	0 0%	0 0%	0 0%
Natural Gas	%	100 0%	100 0%	100 0%	100 0%	100 0%	100 0%	100 0%	100 0%	100 0%	100 0%	100 0%
Weighted average fuel price	$/Gcal	9 40	9 40	9 40	9 40	9 40	9 40	9 40	9 40	9 40	9 40	9 40
Local DH Boilers												
Coal	%	0 0%	0 0%	0 0%	0 0%	0 0%	0 0%	0 0%	0 0%	0 0%	0 0%	0 0%
Mazut	%	0 0%	0 0%	0 0%	0 0%	0 0%	0 0%	0 0%	0 0%	0 0%	0 0%	0 0%
Natural Gas	%	100 0%	100 0%	100 0%	100 0%	100 0%	100 0%	100 0%	100 0%	100 0%	100 0%	100 0%
Weighted average fuel price	$/Gcal	9 40	9 40	9 40	9 40	9 40	9 40	9 40	9 40	9 40	9 40	9 40

Boiler efficiencies		1995	1996	1997	1998	1999	2000	2001	2002	2003	2004	2005
Bishkek CHP boilers (TES 1)		87 5%	87 3%	87 1%	86 9%	88 5%	88 4%	88 3%	88 3%	88 2%	88 0%	87 8%
Bishkek HOBs (TES 1 and TES 2)	%	89 0%	89 0%	89 0%	89 0%	89 0%	89 0%	89 0%	89 0%	89 0%	89 0%	89 0%
Local HOBs (Frunze JAL)												
Coal	%	0 0%	0 0%	0 0%	0 0%	0 0%	0 0%	0 0%	0 0%	0 0%	0 0%	0 0%
Mazut	%	89 0%	89 0%	89 0%	89 0%	89 0%	89 0%	89 0%	89 0%	89 0%	89 0%	89 0%
Natural gas	%	83 0%	83 0%	83 0%	83 0%	83 0%	83 0%	83 0%	83 0%	83 0%	83 0%	83 0%
Weighted average	%	*83 0%*	*83 0%*	*83 0%*	*83 0%*	*83 0%*	*83 0%*	*83 0%*	*83 0%*	*83 0%*	*83 0%*	*83 0%*
Process steam generation	Gcal/hr add l heat input per Gcal/hr steam	0 63	0 63	0 63	0 63	0 62	0 62	0 62	0 62	0 62	0 63	0 63

Performance Degradation		
Annual change in boiler efficiency	%	0 20%
Annual change in electric capability	%	0 10%

Fuel Allocation for Cogeneration Energy		
Methodology #A CHP advantage devoted to DH energy		
Electric power only production efficiency	%	30 0%
Methodology #B CHP advantage devoted to electric energy		
Distric heat only production efficiency	%	87 0%
Allocation Factors for TES 1 CHP Plant O&M and Investment		
% allocated to electric production	%	75 0%
% allocated to district heating production	%	12 5%
% allocated to process steam production	%	12 5%

Economic and Financial Parameters			
Capital cost real escalation rates		1995 2000	2001 2014
Western	%	0 00%	0 00%
Russian	%	0 00%	0 00%
Kyrgyz labor	%	16 90%	6 60%
Kyrgyz material	%	1 70%	0 90%
Kyrgyz equipment	%	1 50%	3 20%
Discount Rate for NPV Calculation	%	12 00%	
Physical contingencies + technical assistance & training	% of direct costs	12 50%	

Composite escalation factors	1995	1996	1997	1998	1999	2000	2001	2002	2003	2004	2005
Western	1 000	1 000	1 000	1 000	1 000	1 000	1 000	1 000	1 000	1 000	1 000
Russian	1 000	1 000	1 000	1 000	1 000	1 000	1 000	1 000	1 000	1 000	1 000
Kyrgyz labor	1 000	1 169	1 367	1 598	1 867	2 183	2 327	2 481	2 645	2 819	3 005
Kyrgyz material	1 000	1 017	1 034	1 052	1 070	1 088	1 098	1 108	1 118	1 128	1 138
Kyrgyz equipment	1 000	1 015	1 030	1 046	1 061	1 077	1 112	1 147	1 184	1 222	1 261

Load Forecast

Case Number 3 Base Assumptions

Load Forecast Development

Study Year		1	2	3	4	5	6	7	8	9	10	11
Calendar Year		1995	1996	1997	1998	1999	2000	2001	2002	2003	2004	2005
District heating pipe losses												
Bishkek DH system	/	25 01/	25 00%	24 51/	24 75%	24 99%	25 20%	25 45%	25 67/	25 91/	26 13/	26 41/
Local DH system	/	10 00%	10 00%	10 00/	10 00/	10 00%	10 00%	10 00/	10 00%	10 00%	10 00%	10 00%
T&D losses (in Bishkek)	/	12 0%	12 0%	12 0%	11 0%	11 0%	11 0%	11 0/	11 0%	10 0%	10 0%	10 0%
Thermal Energy												
Bishkek DH System Hot Water												
Maximum Demand (generation basis)												
Existing customers	Gcal/hr	900 0	935 0	950 0	924 0	897 0	870 0	850 0	826 0	802 0	778 0	754 0
New customers	Gcal/hr	0.0	0.0	0.0	0.0	0.0	0.0	0.0	0.0	0.0	0.0	0.0
Total Maximum Demand	*Gcal/hr*	*900 0*	*935 0*	*950 0*	*924 0*	*897 0*	*8 0 0*	*850 0*	*826 0*	*802 0*	*778 0*	*754 0*
Disposition of Energy												
Existing customers	Tcal	2 000 0	2 100 0	2 165 0	2 149 0	2 134 0	2 119 0	2 103 0	2 088 0	2 073 0	2 058 0	2 042 0
New customers	Tcal	0.0	0.0	0.0	0.0	0.0	0.0	0.0	0.0	0.0	0.0	0.0
Total (sales basis)	Tcal	2 000 0	2 100 0	2 165 0	2 149 0	2 134 0	2 119 0	2 103 0	2 088 0	2 073 0	2 058 0	2 042 0
Distribution losses												
Existing customers	Tcal	667 0	700 0	702 9	706 8	711 0	713 9	717 9	721 1	724 9	728 0	732 8
New customers	Tcal	0.0	0.0	0.0	0.0	0.0	0.0	0.0	0.0	0.0	0.0	0.0
Total Disposition of Energy	*Tcal*	*2 667 0*	*2 800 0*	*2 86 9*	*2 855 8*	*2 845 0*	*2 832 9*	*2 820 9*	*2 809 1*	*2 79[illegible] 9*	*2 786 0*	*2 774 8*
Bishkek DH System Process Steam												
Energy generation basis	Tcal	571 4	642 9	785 7	785 7	785 7	785 7	785 7	785 7	785 7	785 7	785 7
Energy sales basis	Tcal	400 0	450 0	550 0	550 0	550 0	550 0	550 0	550 0	550 0	550 0	550 0
Local DH System Hot Water												
Maximum Demand (generation basis)	Gcal/hr	46 0	53 0	61 0	71 0	71 0	71 0	71 0	71 0	71 0	71 0	71 0
Disposition of Energy												
Existing customers	Tcal	93 6	108 0	124 2	143 1	143 1	143 1	143 1	143 1	143 1	143 1	143 1
Distribution losses	Tcal	10.4	12.0	13.8	15.9	15.9	15.9	15.9	15.9	15.9	15.9	15.9
Total Disposition of Energy	*Tcal*	104 0	120 0	138 0	159 0	159 0	159 0	159 0	159 0	159 0	159 0	159 0
Electric Energy												
Maximum Demand (generation basis)												
Local customers	MW	425 0	434 2	443 6	453 3	463 1	473 2	483 4	493 9	504 6	515 6	526 8
Transfers	MW	100 0	102 2	104 4	106 7	109 0	111 3	113 7	116 2	118 7	121 3	123 9
DH pumping power	MW	7.3	7.6	7.8	7.7	7.5	7.2	7.1	6.9	6.7	6.5	6.4
Total Maximum Demand	*MW*	*532 3*	*544 0*	*555 8*	*56 6*	*5 9 5*	*591*	*604 3*	*61 0*	*630 1*	*643 4*	*657 1*
Disposition of Energy												
Local customers (sales basis)	GWh	1 002 0	1 052 0	1 094 0	1 127 0	1 161 0	1 196 0	1 232 0	1 269 0	1 307 0	1 346 0	1 386 0
Transfers	GWh	350 0	357 6	365 4	373 3	381 4	389 7	398 1	406 8	415 6	424 6	433 8
DH pumping power	GWh	21.3	22 5	23.1	23 2	23.1	23 0	22 9	22 9	22 8	22.7	22.6
Total consumption	GWh	1 373 3	1 432 1	1 482 5	1 523 5	1 565 5	1 608 7	1 653 1	1 698 6	1 745 3	1 793 3	1 842 4
T&D losses	GWh	187.3	195.3	202.2	188.3	193.5	198.8	204.3	209.9	193.9	199.3	204.7
Total Disposition of Energy	*GWh*	*1 560 6*	*1 627 4*	*1 684 7*	*1 [illegible] 8*	*1 759 0*	*1 80 5*	*1 857 4*	*1 908 5*	*1 939 3*	*1 992 5*	*2 047 1*

Summary of [redacted] Forecasts (generation basis)

Calendar Year		1995	1996	1997	1998	1999	2000	2001	2002	2003	2004	2005
Thermal Load to be Served by Bishkek DH System												
Maximum Demand Hot Water	Gcal/hr	900 0	935 0	950 0	924 0	897 0	870 0	850 0	826 0	802 0	778 0	754 0
Thermal Energy Hot Water	Tcal	2 667 0	2 800 0	2 867 9	2 855 8	2 845 0	2 832 9	2 820 9	2 809 1	2 797 9	2 786 0	2 774 8
Maximum Demand Process Steam	Gcal/hr	130 5	146 8	179 4	179 4	179 4	179 4	179 4	179 4	179 4	179 4	179 4
Thermal Energy Process Steam	Tcal	571 4	642 9	785 7	785 7	785 7	785 7	785 7	785 7	785 7	785 7	785 7
Thermal Load to be Served by Local DH System												
Maximum Demand Hot Water	Gcal/hr	46 0	53 0	61 0	71 0	71 0	71 0	71 0	71 0	71 0	71 0	71 0
Thermal Energy Hot Water	Tcal	104 0	120 0	138 0	159 0	159 0	159 0	159 0	159 0	159 0	159 0	159 0
Maximum Demand Process Steam	Gcal/hr	0 0	0 0	0 0	0 0	0 0	0 0	0 0	0 0	0 0	0 0	0 0
Thermal Energy Process Steam	Tcal	0 0	0 0	0 0	0 0	0 0	0 0	0 0	0 0	0 0	0 0	0 0
Total Thermal Load to be Served												
Maximum Demand Hot Water	Gcal/hr	946 0	988 0	1 011 0	995 0	968 0	941 0	921 0	897 0	873 0	849 0	825 0
Thermal Energy Hot Water	Tcal	2 771 0	2 920 0	3 005 9	3 014 8	3 004 0	2 991 9	2 979 9	2 968 1	2 956 9	2 945 0	2 933 8
Maximum Demand Process Steam	Gcal/hr	130 5	146 8	179 4	179 4	179 4	179 4	179 4	179 4	179 4	179 4	179 4
Thermal Energy Process Steam	Tcal	571 4	642 9	785 7	785 7	785 7	785 7	785 7	785 7	785 7	785 7	785 7
Total Electric Load Forecast												
Maximum Demand	MW	532 3	544 0	555 8	567 6	579 5	591 7	604 3	617 0	630 1	643 4	657 1
Electric Energy	GWh	1,560 6	1,627 4	1,684 7	1,711 8	1,759 0	1,807 5	1,857 4	1,908 5	1,939 3	1,992 5	2,047 1

Load/Capacity Balance

Case No 3 Base Assumptions

Study Year		1	2	3	4	5	6	7	8	9	10	11
Calendar Year		1995	1996	1997	1998	1999	2000	2001	2002	2003	2004	2005
Electric Energy												
Maximum Demand	MW	532 3	544 0	555 8	567 6	579 5	591 7	604 3	617 0	630 1	643 4	657 1
Existing capacity resources												
TES 1 CHP Plant	MW	550 5	549 9	549 4	549 4	633 1	591 4	591 4	591 4	590 8	590 2	589 6
Grid electric capacity	MW	200 0	200 0	200 0	200 0	200 0	200 0	200 0	200 0	200 0	200 0	200 0
GTCC	MW	0.0	0.0	0.0	0.0	0.0	0.0	0.0	0.0	0.0	0.0	0.0
Total capacity resources before additions	MW	750 5	749 9	749 4	749 4	833 1	791 4	791 4	791 4	790 8	790 2	789 6
% reserve before capacity additions	%	41 0%	37 9%	34 8%	32 0%	43 8%	33 7%	31 0%	28 3%	25 5%	22 8%	20 2%
Capacity resources required	MW	612 3	625 6	639 2	652 7	666 5	680 5	694 9	709 6	724 6	740 0	755 6
Additional capacity required (minimum)	MW	0 0	0 0	0 0	0 0	0 0	0 0	0 0	0 0	0 0	0 0	0 0
Capacity additions/retirements												
TES 1 CHP Rehabilitation (install TG11 or equiv)	MW	0 0	0 0	0 0	83 7	0 0	0 0	0 0	0 0	0 0	0 0	0 0
TES 1 CHP Retirement of Unit 1 and 2	MW	0 0	0 0	0 0	0 0	(41 7)	0 0	0 0	0 0	0 0	0 0	0 0
Grid electric capacity additions	MW	0 0	0 0	0 0	0 0	0 0	0 0	0 0	0 0	0 0	0 0	0 0
GTCC capacity additions	MW	0 0	0 0	0 0	0 0	0 0	0 0	0 0	0 0	0 0	0 0	0 0
Total capacity resources after additions	MW	750 5	749 9	749 4	833 1	833 1	791 4	791 4	791 4	790 8	790 2	789 6
% reserve after capacity additions	%	41 0%	37 9%	34 8%	46 8%	43 8%	33 7%	31 0%	28 3%	25 5%	22 8%	20 2%
Thermal Energy - Hot Water												
Bishkek DH System												
Maximum Demand	Gcal/hr	900 0	935 0	950 0	924 0	897 0	870 0	850 0	826 0	802 0	778 0	754 0
Existing capacity resources												
TES 1 CHP Plant												
nominal HW capacity	Gcal/hr	740 0	740 0	740 0	895 0	895 0	811 4	811 4	811 4	811 4	811 4	811 4
peaking HW capacity	Gcal/hr	281.3	265.0	232.4	232.4	232.4	229.0	229.0	229.0	229.0	229.0	229.0
total	Gcal/hr	1 021 3	1 005 0	972 4	1 127 4	1 127 4	1 040 4	1 040 4	1 040 4	1 040 4	1 040 4	1 040 4
TES 1HOBs	Gcal/hr	300 0	300 0	300 0	300 0	300 0	300 0	300 0	300 0	300 0	300 0	300 0
TES 2 HOBs	Gcal/hr	192 0	192 0	192 0	192 0	192 0	192 0	192 0	192 0	192 0	192 0	192 0
Existing HOBs Frunze	Gcal/hr	0 0	0 0	0 0	0 0	0 0	0 0	0 0	0 0	0 0	0 0	0 0
Existing HOBs JAL	Gcal/hr	0 0	0 0	0 0	0 0	0 0	0 0	0 0	0 0	0 0	0 0	0 0
New HOBs in local DH system	Gcal/hr	0.0	0.0	0.0	0.0	0.0	0.0	0.0	0.0	0.0	0.0	0.0
Total capacity resources before additions	Gcal/hr	1 513 3	1 497 0	1 464 4	1 619 4	1 619 4	1 532 4	1 532 4	1 532 4	1 532 4	1 532 4	1 532 4
% reserve before capacity additions	%	68 1%	60 1%	54 1%	75 3%	80 5%	76 1%	80 3%	85 5%	91 1%	97 0%	103 2%
Capacity resources required	Gcal/hr	1 035 0	1 075 3	1 092 5	1 079 0	1 052 0	1 025 0	1 005 0	981 0	957 0	933 0	909 0
Additional capacity required (minimum)	Gcal/hr	0 0	0 0	0 0	0 0	0 0	0 0	0 0	0 0	0 0	0 0	0 0
Capacity additions/retirements												
New HOB capacity	Gcal/hr	0 0	0 0	0 0	0 0	0 0	0 0	0 0	0 0	0 0	0 0	0 0
Total capacity resources after additions	Gcal/hr	1 513 3	1 497 0	1 464 4	1 619 4	1 619 4	1 532 4	1 532 4	1 532 4	1 532 4	1 532 4	1 532 4
% reserve after capacity additions	%	68 1%	60 1%	54 1%	75 3%	80 5%	76 1%	80 3%	85 5%	91 1%	97 0%	103 2%
Local DH System												
Maximum Demand	Gcal/hr	46 0	53 0	61 0	71 0	71 0	71 0	71 0	71 0	71 0	71 0	71 0
Existing capacity resources												
Existing HOBs Frunze	Gcal/hr	150 0	150 0	150 0	150 0	150 0	150 0	150 0	150 0	150 0	150 0	0 0
Existing HOBs JAL	Gcal/hr	40 0	40 0	40 0	40 0	40 0	40 0	40 0	40 0	40 0	40 0	40 0
New HOBs capacity additions	Gcal/hr	0.0	0.0	0.0	0.0	0.0	0.0	0 0	0.0	0.0	0.0	0.0
Total capacity resources before additions	Gcal/hr	190 0	190 0	190 0	190 0	190 0	190 0	190 0	190 0	190 0	190 0	40 0
% reserve before capacity additions	%	313 0%	258 5%	211 5%	167 6%	167 6%	167 6%	167 6%	167 6%	167 6%	167 6%	-43 7%
Capacity resources required	Gcal/hr	96 0	103 0	111 0	121 0	121 0	121 0	121 0	121 0	121 0	121 0	91 0
Additional capacity required (minimum)	Gcal/hr	0 0	0 0	0 0	0 0	0 0	0 0	0 0	0 0	0 0	0 0	51 0
Capacity additions/retirements												
New HOB capacity	Gcal/hr	0 0	0 0	0 0	0 0	0 0	0 0	0 0	0 0	0 0	0 0	50 0
Frunze boiler retirements	Gcal/hr	0.0	0 0	0.0	0.0	0.0	0.0	0 0	0.0	0.0	(150.0)	0.0
Total capacity resources after additions	Gcal/hr	190 0	190 0	190 0	190 0	190 0	190 0	190 0	190 0	190 0	190 0	90 0
% reserve after capacity additions	%	313 0%	258 5%	211 5%	167 6%	167 6%	167 6%	167 6%	167 6%	167 6%	167 6%	26 8%
Thermal Energy - Process Steam												
Maximum Demand	Gcal/hr	130 5	146 8	179 4	179 4	179 4	179 4	179 4	179 4	179 4	179 4	179 4
Existing capacity resources (TES 1 CHP)	Gcal/hr	411 8	411 8	411 8	411 8	411 8	408 4	408 4	408 4	408 4	408 4	408 4
% reserve	%	215 6%	180 6%	129 6%	129 6%	129 6%	127 7%	127 7%	127 7%	127 7%	127 7%	127 7%

Energy Production/Fuel Consumption Summary

Case Number 3 Base Assumptions

Study Year		1	2	3	4	5	6	7	8	9	10	11
Calendar Year		1995	1996	1997	1998	1999	2000	2001	2002	2003	2004	2005
Energy Production												
Electric Energy Generation												
Bishkek CHP Plant (TES 1)	GWh	1 560 4	1 626 7	1 682 9	1 711 8	1 759 0	1 806 6	1 855 6	1 905 5	1 934 5	1 985 5	2 036 5
Grid electric	GWh	0 2	0 7	1 7	0 0	0 0	0 9	1 8	3 0	4 8	7 1	10 6
GTCC	GWh	0.0	0.0	0.0	0.0	0.0	0.0	0.0	0.0	0 0	0.0	0.0
Total	GWh	1 560 6	1 627 4	1 684 7	1 711 8	1 759 0	1 807 5	1 857 4	1 908 5	1 939 3	1 992 5	2 047 1
Thermal Energy Generation												
Distric heating (heat hot water)												
Bishkek CHP Plant (TES 1)	Tcal	2 483 2	2 586 9	2 648 5	2 673 9	2 690 5	2 745 3	2 753 5	2 758 6	2 761 2	2 754 3	2 745 3
Bishkek HOBs (TES 1 and TES 2)	Tcal	183 9	213 1	219 5	181 9	154 4	87 6	67 5	50 5	36 7	31 7	29 5
Local DH System HOBs	Tcal	104.0	120.0	138 0	159.0	159.0	159.0	159.0	159.0	159.0	159.0	159.0
Total	Tcal	2 771 0	2 920 0	3 005 9	3 014 8	3 004 0	2 991 9	2 979 9	2 968 1	2 956 9	2 945 0	2 933 8
Process steam												
Bishkek DH system (TES 1)	Tcal	571 4	642 9	785 7	785 7	785 7	785 7	785 7	785 7	785 7	785 7	785 7
Fuel Consumption												
Bishkek DH System												
Coal	Tcal	4 907 4	6 654 5	6 953 9	6 985 4	6 990 2	7 154 1	7 292 5	7 432 1	7 556 1	7 708 4	7 861 8
Mazut	Tcal	327 2	137 2	143 4	144 0	144 1	147 5	150 4	153 2	155 8	158 9	162 1
Natural gas	Tcal	1,515.2	308.1	318 3	276.4	245.6	172.2	151.0	133.3	119.2	115.0	114.2
Total	Tcal	6 749 7	7 099 8	7 415 6	7 405 8	7 379 9	7 473 8	7 593 9	7 718 7	7 831 1	7 982 4	8 138 2
Local DH System												
Coal	Tcal	0 0	0 0	0 0	0 0	0 0	0 0	0 0	0 0	0 0	0 0	0 0
Mazut	Tcal	0 0	0 0	0 0	0 0	0 0	0 0	0 0	0 0	0 0	0 0	0 0
Natural gas	Tcal	125 3	144.6	166.3	191.6	191.6	191.6	191.6	191.6	191.6	191.6	191.6
Total	Tcal	125 3	144 6	166 3	191 6	191 6	191 6	191 6	191 6	191 6	191 6	191 6
GTCC natural gas	Tcal	0 0	0 0	0 0	0 0	0 0	0 0	0 0	0 0	0 0	0 0	0 0
Total Fuel Consumption	Tcal	6 875 0	7 244 4	7 581 9	7 597 3	7 571 4	7 665 3	7 785 4	7 910 2	8 022 7	8 174 0	8 329 7
/ by type												
Coal	%	71 4%	91 9%	91 7%	91 9%	92 3%	93 3%	93 7%	94 0%	94 2%	94 3%	94 4%
Mazut	%	4 8%	1 9%	1 9%	1 9%	1 9%	1 9%	1 9%	1 9%	1 9%	1 9%	1 9%
Natural gas	%	23.9%	6.2%	6.4%	6.2%	5.8%	4.7%	4.4%	4.1%	3 9%	3.8%	3.7%
Total	%	100 0%	100 0%	100 0%	100 0%	100 0%	100 0%	100 0%	100 0%	100 0%	100 0%	100 0%

Generating Resource Characteristics

Case Number 3 Base Assumptions

Study Year			1	2	3	4	5	6	7	8	9	10	11
Calendar Year			1995	1996	1997	1998	1999	2000	2001	2002	2003	2004	2005
TES-1 CHP Plant			1995	1996	1997	1998	1999	2000	2001	2002	2003	2004	2005
Electric Capability													
Unit #1		MW	35 0	35 0	35 0	35 0	35 0	0 0	0 0	0 0	0 0	0 0	0 0
Unit #2		MW	25 0	25 0	25 0	25 0	25 0	0 0	0 0	0 0	0 0	0 0	0 0
Unit #3		MW	50 0	50 0	50 0	50 0	50 0	50 0	50 0	50 0	50 0	50 0	50 0
Unit #4		MW	35 0	35 0	35 0	35 0	35 0	35 0	35 0	35 0	35 0	35 0	35 0
Unit #5		MW	35 0	35 0	35 0	35 0	35 0	35 0	35 0	35 0	35 0	35 0	35 0
Unit #6		MW	86 0	86 0	86 0	86 0	86 0	86 0	86 0	86 0	86 0	86 0	86 0
Unit #7		MW	60 0	60 0	60 0	60 0	60 0	60 0	60 0	60 0	60 0	60 0	60 0
Unit #8		MW	60 0	60 0	60 0	60 0	60 0	60 0	60 0	60 0	60 0	60 0	60 0
Unit #9		MW	86 0	86 0	86 0	86 0	86 0	86 0	86 0	86 0	86 0	86 0	86 0
Unit #10		MW	86 0	86 0	86 0	86 0	86 0	86 0	86 0	86 0	86 0	86 0	86 0
Unit #11	0	MW	0.0	0.0	0.0	90.0	90.0	90.0	90.0	90.0	90.0	90.0	90.0
Total		MW	558 0	558 0	558 0	648 0	648 0	588 0	588 0	588 0	588 0	588 0	588 0
Largest Unit		MW	86 0	86 0	86 0	90 0	90 0	90 0	90 0	90 0	90 0	90 0	90 0
		MW net	80 0	80 0	80 0	83 7	83 7	83 7	83 7	83 7	83 7	83 7	83 7
DH Capability Hot Water													
Unit #1		Gcal/hr	35 0	35 0	35 0	35 0	35 0	0 0	0 0	0 0	0 0	0 0	0 0
Unit #2		Gcal/hr	48 6	48 6	48 6	48 6	48 6	0 0	0 0	0 0	0 0	0 0	0 0
Unit #3		Gcal/hr	51 0	51 0	51 0	51 0	51 0	51 0	51 0	51 0	51 0	51 0	51 0
Unit #4		Gcal/hr	97 0	97 0	97 0	97 0	97 0	97 0	97 0	97 0	97 0	97 0	97 0
Unit #5		Gcal/hr	97 0	97 0	97 0	97 0	97 0	97 0	97 0	97 0	97 0	97 0	97 0
Unit #6		Gcal/hr	102 6	102 6	102 6	102 6	102 6	102 6	102 6	102 6	102 6	102 6	102 6
Unit #7		Gcal/hr	61 0	61 0	61 0	61 0	61 0	61 0	61 0	61 0	61 0	61 0	61 0
Unit #8		Gcal/hr	61 0	61 0	61 0	61 0	61 0	61 0	61 0	61 0	61 0	61 0	61 0
Unit #9		Gcal/hr	102 6	102 6	102 6	102 6	102 6	102 6	102 6	102 6	102 6	102 6	102 6
Unit #10		Gcal/hr	103 0	103 0	103 0	103 0	103 0	103 0	103 0	103 0	103 0	103 0	103 0
Unit #11		Gcal/hr	0.0	0.0	0.0	155 0	155.0	155.0	155.0	155.0	155.0	155.0	155.0
Total		Gcal/hr	758 8	758 8	758 8	913 8	913 8	830 2	830 2	830 2	830 2	830 2	830 2
Largest Unit		Gcal/hr	103 0	103 0	103 0	155 0	155 0	155 0	155 0	155 0	155 0	155 0	155 0
Boiler Efficiencies			1999	2003									
w/o Rehabilitation		%	87 5/										
w/Rehabilitation		/	89 5/										
Boiler #14		/	87 5/	87 3/	87 1/	86 9%	89 5/	89 5/	89 5/	89 5/	89 5/	89 3/	89 1/
Boiler #15		/	87 5%	87 3%	87 1%	86 9%	89 5/	89 5%	89 5/	89 5/	89 5/	89 3/	89 1/
Boiler #16		/	87 5/	87 3/	87 1/	86 9/	89 5/	89 5/	89 5/	89 5/	89 5/	89 3/	89 1/
Boiler #17		%	87 5/	87 3/	87 1/	86 9/	89 5/	89 5/	89 5/	89 5/	89 5/	89 3/	89 1%
Boiler #18		/	87 5%	87 3/	87 1%	86 9%	89 5/	89 5/	89 5/	89 5/	89 5/	89 3/	89 1/
Boiler #19		%	87 5/	87 3/	87 1/	86 9%	89 5%	89 5/	89 5/	89 5/	89 5/	89 3/	89 1/
Boiler #20		/	87 5/	87 3/	87 1/	86 9%	89 5/	89 5/	89 5/	89 5/	89 5/	89 3/	89 1/
Boiler #21		/	87 5/	87 3/	87 1/	86 9%	86 7/	86 5/	86 3/	86 1%	85 9%	85 7/	85 5/
Boiler #22		/	87 5%	87 3%	87 1/	86 9%	86 7/	86 5%	86 3/	86 1%	85 9%	85 7/	85 5%
Boiler #23		%	87 5/	87 3/	87 1%	86 9%	86 7/	86 5/	86 3%	86 1/	85 9%	85 7/	85 5%
Boiler #24		/	87 5/	87 3/	87 1/	86 9%	86 7/	86 5/	86 3%	86 1/	85 9/	85 7/	85 5%
Weighted average		/	87 5/	87 3%	87 1%	86 9%	88 5/	88 4/	88 3/	88 3/	88 2/	88 0%	87 8/

Calendar year		1995	1996	1997	1998	1999	2000	2001	2002	2003	2004	2005
TES 1 CHP Plant Electrical Rating w/o Rehabilitation												
@ Zero DH Load	MW gross	504 0	504 0	504 0	504 0	504 0	504 0	504 0	504 0	504 0	504 0	504 0
@ 35 / DH Load	MW gross	596 5	596 5	596 5	596 5	596 5	565 5	565 5	565 5	565 5	565 5	565 5
@ 75 / DH Load	MW gross	586 5	586 5	586 5	586 5	586 5	541 0	541 0	541 0	541 0	541 0	541 0
@ Full DH Load	MW gross	550 5	550 5	550 5	550 5	550 5	505 5	505 5	505 5	505 5	505 5	505 5
Change in TES 1 Electrical Rating w/ Rehabilitation												
@ Zero DH Load	MW gross	0 0	0 0	0 0	75 0	0 0	0 0	0 0	0 0	0 0	0 0	0 0
@ 35 / DH Load	MW gross	0 0	0 0	0 0	54 0	0 0	0 0	0 0	0 0	0 0	0 0	0 0
@ 75% DH Load	MW gross	0 0	0 0	0 0	99 4	0 0	0 0	0 0	0 0	0 0	0 0	0 0
@ Full DH Load	MW gross	0 0	0 0	0 0	90 0	0 0	0 0	0 0	0 0	0 0	0 0	0 0
TES 1 CHP Plant Electrical Rating w/ Rehabilitation												
@ Zero DH Load	MW gross	504 0	504 0	504 0	579 0	579 0	579 0	579 0	579 0	579 0	579 0	579 0
@ 35 / DH Load	MW gross	596 5	596 5	596 5	650 5	650 5	619 5	619 5	619 5	619 5	619 5	619 5
@ 75 / DH Load	MW gross	586 5	586 5	586 5	685 9	685 9	640 4	640 4	640 4	640 4	640 4	640 4
@ Full DH Load	MW gross	550 5	550 5	550 5	640 5	640 5	595 5	595 5	595 5	595 5	595 5	595 5
Auxiliary power consumption	/	7 0%	7 0%	7 0%	7 0%	7 0%	7 0%	7 0%	7 0%	7 0%	7 0%	7 0%
@ Zero DH Load	MW net	468 7	468 7	468 7	538 5	538 5	538 5	538 5	538 5	538 5	538 5	538 5
@ 35 / DH Load	MW net	554 7	554 7	554 7	605 0	605 0	576 1	576 1	576 1	576 1	576 1	576 1
@ 75% DH Load	MW net	545 4	545 4	545 4	637 9	637 9	595 6	595 6	595 6	595 6	595 6	595 6
@ Full DH Load	MW net	512 0	512 0	512 0	595 7	595 7	553 8	553 8	553 8	553 8	553 8	553 8
TES 1 CHP Plant DH/HW Rating												
@ Full DH Load (hot water only)	Gcal/hr	740 0	740 0	740 0	895 0	895 0	811 4	811 4	811 4	811 4	811 4	811 4
@ Full DH Load (total DH incl process steam)	Gcal/hr	1 151 8	1 151 8	1 151 8	1 306 8	1 306 8	1 219 8	1 219 8	1 219 8	1 219 8	1 219 8	1 219 8
TES 1 HOBs												
DH Capability Hot Water												
Unit #1	Gcal/hr	100 0	100 0	100 0	100 0	100 0	100 0	100 0	100 0	100 0	100 0	100 0
Unit #2	Gcal/hr	100 0	100 0	100 0	100 0	100 0	100 0	100 0	100 0	100 0	100 0	100 0
Unit #3	Gcal/hr	100.0	100 0	100.0	100.0	100.0	100.0	100.0	100.0	100.0	100.0	100.0
Total	Gcal/hr	300 0	300 0	300 0	300 0	300 0	300 0	300 0	300 0	300 0	300 0	300 0
Boiler Efficiencies												
Unit #1	%	87 0%	87 0%	87 0%	87 0%	87 0%	87 0%	87 0%	87 0%	87 0%	87 0%	87 0%
Unit #2	%	87 0%	87 0%	87 0%	87 0%	87 0%	87 0%	87 0%	87 0%	87 0%	87 0%	87 0%
Unit #3	%	87.0%	87.0%	87.0%	87.0%	87.0%	87.0%	87.0%	87.0%	87.0%	87.0%	87.0%
Weighted average	%	87 0%	87 0%	87 0%	87 0%	87 0%	87 0%	87 0%	87 0%	87 0%	87 0%	87 0%
TES 2 HOBs												
DH Capability Hot Water												
Unit #1	Gcal/hr	96 0	96 0	96 0	96 0	96 0	96 0	96 0	96 0	96 0	96 0	96 0
Unit #2	Gcal/hr	96.0	96.0	96.0	96.0	96.0	96.0	96.0	96.0	96.0	96.0	96.0
Total	Gcal/hr	192 0	192 0	192 0	192 0	192 0	192 0	192 0	192 0	192 0	192 0	192 0
Boiler Efficiencies												
Unit #1	%	87 0%	87 0%	87 0%	87 0%	87 0%	87 0%	87 0%	87 0%	87 0%	87 0%	87 0%
Unit #2	%	87.0%	87.0%	87.0%	87.0%	87.0%	87.0%	87.0%	87.0%	87.0%	87.0%	87.0%
Weighted average	%	87 0%	87 0%	87 0%	87 0%	87 0%	87 0%	87 0%	87 0%	87 0%	87 0%	87 0%
Local DH System												
Frunze Unit #1	Gcal/hr	50 0	50 0	50 0	50 0	50 0	50 0	50 0	50 0	50 0	50 0	0 0
Frunze Unit #2	Gcal/hr	50 0	50 0	50 0	50 0	50 0	50 0	50 0	50 0	50 0	50 0	0 0
Frunze Unit #3	Gcal/hr	50 0	50 0	50 0	50 0	50 0	50 0	50 0	50 0	50 0	50 0	0 0
JAL Unit #1	Gcal/hr	20 0	20 0	20 0	20 0	20 0	20 0	20 0	20 0	20 0	20 0	20 0
JAL Unit #2	Gcal/hr	20.0	20 0	20.0	20.0	20.0	20.0	20.0	20 0	20.0	20.0	20.0
Total	Gcal/hr	190 0	190 0	190 0	190 0	190 0	190 0	190 0	190 0	190 0	190 0	40 0
Largest Unit	Gcal/hr	50 0	50 0	50 0	50 0	50 0	50 0	50 0	50 0	50 0	50 0	20 0
New capacity additions												
Mazut fired	Gcal/hr	0 0	0 0	0 0	0 0	0 0	0 0	0 0	0 0	0 0	0 0	0 0
Gas fired	Gcal/hr	0 0	0 0	0 0	0 0	0 0	0 0	0 0	0 0	0 0	0 0	50 0

Investment Schedules

Case Number 3 Base Assumptions

Summary of Investments

Study Year Calendar Year		1 1995	2 1996	3 1997	4 1998	5 1999	6 2000	7 2001	8 2002	9 2003	10 2004	11 2005
Capital Expenditure Schedules												
Investment in Electric and Thermal Energy Supply												
Bishkek DH System												
TES 1 CHP Plant Rehabilitation	$000	0 0	0 0	16 578 9	5 037 8	0 0	0 0	0 0	0 0	0 0	0 0	0 0
Installation of new additional HOBs	$000	0 0	0 0	0 0	0 0	0 0	0 0	0 0	0 0	0 0	0 0	0 0
Local DH System												
Installation of new additional HOBs	$000	0 0	0 0	0 0	0 0	0 0	0 0	0 0	0 0	866 6	886 8	0 0
Bishkek Electric Supply												
New GTCC#1 75 MWe(net)	$000	0 0	0 0	0 0	0 0	0 0	0 0	0 0	0 0	0 0	0 0	0 0
New TG for TES 1 83 7 MWe(net)	$000	0 0	0 0	0 0	0 0	0 0	0 0	0 0	0 0	0 0	0 0	0 0
Investment in Electric Energy Transmission & Distribution System												
Ala Archa220/110kV 200 MW grid uprating	$000	0 0	0 0	0 0	0 0	0 0	0 0	0 0	0 0	0 0	0 0	0 0
Investment in District Heating Distribution System												
District heating system upgrades rehab and modernization	$000	0 0	0 0	0 0	0 0	0 0	0 0	0 0	0 0	0 0	0 0	0 0
District heating system ugrades extension of HW network	$000	0 0	0 0	0 0	0 0	0 0	0 0	0 0	0 0	0 0	0 0	0 0
Rehabilitation of Steam Distribution Network	$000	0 0	0 0	0 0	0 0	0 0	0 0	0 0	0 0	0 0	0 0	0 0
TOTAL ANNUAL CAPITAL EXPENDITURE	$000	0 0	0 0	16 578 9	5 037 8	0 0	0 0	0 0	0 0	866 6	886 8	0 0
Debt Service Schedules												
Investment in Electric and Thermal Energy Supply												
Bishkek DH System												
TES 1 CHP Plant Rehabilitation	$000	0 0	0 0	0 0	3 286 3	4 284 9	4 284 9	4 284 9	4 284 9	4 284 9	4 284 9	4 284 9
Installation of new additional HOBs	$000	0 0	0 0	0 0	0 0	0 0	0 0	0 0	0 0	0 0	0 0	0 0
Local DH System												
Installation of new additional HOBs	$000	0 0	0 0	0 0	0 0	0 0	0 0	0 0	0 0	0 0	0 0	278 5
Bishkek Electric Supply												
New GTCC#1 75 MWe(net)	$000	0 0	0 0	0 0	0 0	0 0	0 0	0 0	0 0	0 0	0 0	0 0
New TG for TES 1 83 7 MWe(net)	$000	0 0	0 0	0 0	0 0	0 0	0 0	0 0	0 0	0 0	0 0	0 0
Investment in Electric Energy Transmission & Distribution System												
Ala Archa220/110kV 200 MW grid uprating	$000	0 0	0 0	0 0	0 0	0 0	0 0	0 0	0 0	0 0	0 0	0 0
Investment in District Heating Distribution System												
District heating system upgrades rehab and modernization	$000	0 0	0 0	0 0	0 0	0 0	0 0	0 0	0 0	0 0	0 0	0 0
District heating system ugrades extension of HW network	$000	0 0	0 0	0 0	0 0	0 0	0 0	0 0	0 0	0 0	0 0	0 0
Rehabilitation of Steam Distribution Network	$000	0 0	0 0	0 0	0 0	0 0	0 0	0 0	0 0	0 0	0 0	0 0
TOTAL ANNUAL INVESTMENT COSTS	$000	0 0	0 0	0 0	0 0	0 0	0 0	0 0	0 0	0 0	0 0	0 0

Case 4

Summary of Costs

Case Number		4	Base Assumptions									
Study Year		1	2	3	4	5	6	7	8	9	10	11
Calendar Year		1995	1996	1997	1998	1999	2000	2001	2002	2003	2004	2005
Production Costs												
Primary Energy Expenses												
Coal	$000	43 185	58 560	61 084	61 172	60 659	61 628	62 710	63 869	64 893	66 189	67 490
Mazut	$000	3 272	1 372	1 431	1 433	1 421	1 444	1 469	1 496	1 520	1 551	1 581
Natural gas	$000	15 421	4 255	3 198	2 613	1 851	1 061	936	855	795	772	765
Grid Electric	$000	7	20	46	0	0	24	49	85	135	191	268
Total primary energy	$000	61 884	64 207	65 760	65 219	63 930	64 157	65 166	66 305	67 343	68 703	70 104
Operating and Maintenance Expenses												
Bishkek TES 1 CHP Plant	$000	11 000	12 342	13 904	13 767	15 184	16 713	16 287	17 933	19 748	21 786	23 787
Bishkek TES 1 and TES 2 HOBs	$000	304	358	409	319	198	65	42	26	14	8	4
Industrial steam distribution system	$000	144	160	178	199	223	252	274	299	327	357	390
District heating distribution system	$000	3 000	3 049	3 006	2 915	2 805	2 939	2 981	3 022	3 062	3 101	3 139
New GTCC plant	$000	0	0	0	0	0	0	0	0	0	0	0
Local DH system HOBs	$000	184	216	0	0	0	0	0	0	0	0	0
Total O&M	$000	14 632	16 124	17 496	17 200	18 410	19 968	19 584	21 280	23 151	25 251	27 320
Total Production Costs	$000	76 515	80 331	83 256	82 419	82 340	84 125	84 750	87 586	90 494	93 954	97 424
Investments												
TES 1 Rehabilitation and New HOBs	$000	0	0	16 579	5 038	0	0	0	0	0	0	0
New Self generation Capacity	$000	0	0	0	0	0	0	0	0	0	0	0
District Heating System Rehabilitation	$000	0	2 898	14 786	8 913	3 150	0	0	0	0	0	0
New HOBs for Local DH System	$000	0	0	0	0	0	0	0	0	0	0	0
Total Investment	$000	0	2 898	31 365	13 950	3 150	0	0	0	0	0	0
Total Annual Cost	$000	76 515	83 229	114 622	96 369	85 490	84 125	84 750	87 586	90 494	93 954	97 424

NPV of Costs		thru 2005	thru 2014
Primary energy expense	$000	386 289	493 670
O&M expense	$000	111,651	160,915
Subtotal production costs	$000	497 940	654 585
Investments	$000	35,288	35,288
Total Annual Costs	$000	533 228	689 873
End effect Adjustment	$000	(7,920)	(7,920)
Total Effective Cost	$000	525 308	681 953

Allocation of Costs Case No 4 Base Assumptions

Study Year		1	2	3	4	5	6	7	8	9	10	11
Calendar Year		1995	1996	1997	1998	1999	2000	2001	2002	2003	2004	2005
Production Costs												
Fuel and Primary Energy Expenses												
Electric Account												
Bishkek TES 1 CHP fuel	$000	33 171	33 941	34 910	35 350	36 171	37 444	38 722	40 011	40 980	42 385	43 808
New GTCC fuel	$000	0	0	0	0	0	0	0	0	0	0	0
Grid electric for electric loads	$000	7	20	46	0	0	24	49	84	134	189	266
Total primary energy	$000	33 178	33 961	34 956	35 350	36 171	37 468	38 771	40 095	41 114	42 575	44 075
District Heating Account												
Bishkek TES 1 CHP fuel	$000	20 374	20 900	21 533	21 266	20 073	19 816	19 661	19 572	19 618	19 538	19 446
Bishkek TES 1 and TES 2 HOBs fuel	$000	1 942	2 251	2 526	1 940	1 183	382	246	152	80	43	21
Local DH system HOBs fuel	$000	1 178	1 359	0	0	0	0	0	0	0	0	0
Grid electric for pumping power	$000	0	0	1	0	0	0	0	1	1	1	2
GTCC fuel for pumping power	$000	0	0	0	0	0	0	0	0	0	0	0
Bishkek TES 1 CHP fuel for pumping power	$000	524	541	389	375	351	339	337	336	332	332	331
Total primary energy	$000	24 017	25 052	24 448	23 581	21 607	20 537	20 244	20 061	20 032	19 915	19 800
Process Steam Account												
Bishkek TES 1 CHP fuel	$000	4 689	5 194	6 356	6 288	6 153	6 152	6 150	6 149	6 197	6 213	6 229
Operating and Maintenance Expenses												
Electric Account												
Bishkek TES 1 CHP Plant	$000	8 250	9 256	10 428	10 326	11 388	12 534	12 215	13 450	14 811	16 339	17 840
New GTCC	$000	0	0	0	0	0	0	0	0	0	0	0
Total O&M	$000	8 250	9 256	10 428	10 326	11 388	12 534	12 215	13 450	14 811	16 339	17 840
District Heating Account												
Bishkek TES 1 CHP Plant	$000	1 375	1 543	1 738	1 721	1 898	2 089	2 036	2 242	2 468	2 723	2 973
Bishkek TES 1 and TES 2 HOBs	$000	304	358	409	319	198	65	42	26	14	8	4
District heating distribution system	$000	3 000	3 049	3 006	2 915	2 805	2 939	2 981	3 022	3 062	3 101	3 139
Local DH system HOBs	$000	184	216	0	0	0	0	0	0	0	0	0
Total O&M	$000	4 863	5 165	5 152	4 955	4 900	5 093	5 059	5 290	5 545	5 832	6 117
Process Steam Account												
Bishkek TES 1 CHP Plant	$000	1 375	1 543	1 738	1 721	1 898	2 089	2 036	2 242	2 468	2 723	2 973
Process steam distribution system	$000	144	160	178	199	223	252	274	299	327	357	390
Total O&M	$000	1 519	1 703	1 916	1 920	2 121	2 341	2 310	2 541	2 795	3 080	3 363
Debt Service												
Electric Account												
TES 1 CHP Plant Rehabilitation	$000	0	0	0	2 465	3 214	3 214	3 214	3 214	3 214	3 214	3 214
New Self generating Capacity	$000	0	0	0	0	0	0	0	0	0	0	0
Ala Archa220/110kV 200 MW grid uprating	$000	0	0	0	0	0	0	0	0	0	0	0
Total	$000	0	0	0	2 465	3 214	3 214	3 214	3 214	3 214	3 214	3 214
District Heating Account												
TES 1 CHP Plant Rehabilitation	$000	0	0	0	411	536	536	536	536	536	536	536
New HOBs for Bishkek DH System	$000	0	0	0	0	0	0	0	0	0	0	0
New HOBs for Local DH System	$000	0	0	0	0	0	0	0	0	0	0	0
District Heating System Rehabilitation	$000	0	0	574	3,505	5,272	5,896	5 896	5,896	5 896	5,896	5,896
Total	$000	0	0	574	3 916	5 808	6 432	6 432	6 432	6 432	6 432	6 432
Process Steam Account												
TES 1 CHP Plant Rehabilitation	$000	0	0	0	411	536	536	536	536	536	536	536
Steam Distribution System Rehabilitation	$000	0	0	0	0	0	0	0	0	0	0	0
Total	$000	0	0	0	411	536	536	536	536	536	536	536

Partial Tariffs Case No 4 Base Assumptions

Study Year		1	2	3	4	5	6	7	8	9	10	11
Calendar Year		1995	1996	1997	1998	1999	2000	2001	2002	2003	2004	2005
Electric Account												
Total production costs	$000	41 428	43 217	45 383	45 675	47 558	50 002	50 986	53 545	55 925	58 914	61 915
Total carrying charges	$000	0	0	0	2,465	3,214	3,214	3,214	3,214	3,214	3,214	3,214
Total cost of service	$000	41 428	43 217	45 383	48 140	50 772	53 216	54 200	56 758	59 139	62 128	65 128
Total sales of electricity	GWh	1 352 0	1 409 6	1 459 4	1 500 3	1 542 4	1 585 7	1 630 1	1 675 8	1 722 6	1 770 6	1 819 8
Partial tariff production costs	cents/kWh	3 06	3 07	3 11	3 04	3 08	3 15	3 13	3 20	3 25	3 33	3 40
Partial tariff carrying charges	cents/kWh	0 00	0 00	0 00	0 16	0 21	0 20	0 20	0 19	0 19	0 18	0 18
Partial tariff all costs	cents/kWh	3 06	3 07	3 11	3 21	3 29	3 36	3 32	3 39	3 43	3 51	3 58
District Heating Account												
Total production costs	$000	28 880	30 217	29 601	28 535	26 507	25 630	25 303	25 351	25 577	25 747	25 917
Total carrying charges	$000	0	0	574	3,916	5,808	6,432	6,432	6,432	6,432	6,432	6,432
Total cost of service	$000	28 880	30 217	30 175	32 451	32 315	32 062	31 735	31 783	32 009	32 179	32 349
Total sales of district heat	Tcal	2 093 6	2 208 0	2 285 0	2 273 0	2 230 0	2 209 0	2 188 0	2 168 0	2 148 0	2 128 0	2 108 0
Partial tariff production costs	$/Gcal	13 79	13 69	12 95	12 55	11 89	11 60	11 56	11 69	11 91	12 10	12 29
Partial tariff carrying charges	$/Gcal	0.00	0.00	0.25	1.72	2.60	2.91	2.94	2.97	2.99	3.02	3.05
Partial tariff all costs	$/Gcal	13 79	13 69	13 21	14 28	14 49	14 51	14 50	14 66	14 90	15 12	15 35
Process Steam Account												
Total production costs	$000	6 208	6 896	8 272	8 208	8 275	8 493	8 460	8 690	8 992	9 293	9 592
Total carrying charges	$000	0	0	0	411	536	536	536	536	536	536	536
Total cost of service	$000	6 208	6 896	8 272	8 619	8 810	9 028	8 996	9 226	9 528	9 829	10 128
Total sales of process steam	Tcal	400 0	450 0	550 0	550 0	550 0	550 0	550 0	550 0	550 0	550 0	550 0
Partial tariff production costs	$/Gcal	15 52	15 33	15 04	14 92	15 04	15 44	15 38	15 80	16 35	16 90	17 44
Partial tariff carrying charges	$/Gcal	0.00	0.00	0.00	0.75	0.97	0.97	0.97	0.97	0.97	0.97	0.97
Partial tariff all costs	$/Gcal	15 52	15 33	15 04	15 67	16 02	16 41	16 36	16 77	17 32	17 87	18 41

Input Data and Assumptions

Case Number			4	Base Assumptions
Thermal Energy Supply Source	1	TES 1 + HOBs		
Rehabilitate TES 1?	1	Yes		
Electric Energy Supply Source	1	TES 1 + Grid Electric		
Supplemental Electric Capacity	1	New GTCC		
District Heating Scenario	2	*Scenario 2*	*= Modernization/rehabilitation*	
Local DH supply by Bishkek DH?	0	No		
When?	*1997*	and beyond		

Study Year			1	2	3	4	5	6	7	8	9	10	11
Calendar Year			1995	1996	1997	1998	1999	2000	2001	2002	2003	2004	2005
Thermal Energy													
District Heating													
Maximum Demand													
Existing customers	generation basis	Gcal/hr	900 0	935 0	985 0	968 0	941 0	914 0	888 0	861 0	834 0	808 0	782 0
New customers	generation basis	Gcal/hr	46.0	53.0	0.0	0.0	0.0	0.0	0.0	0.0	0.0	0.0	0.0
Total	generation basis	Gcal/hr	946 0	988 0	985 0	968 0	941 0	914 0	888 0	861 0	834 0	808 0	782 0
Disposition of energy													
Existing customers	sales basis	Tcal	2 000 0	2 100 0	2 285 0	2 273 0	2 230 0	2 209 0	2 188 0	2 168 0	2 148 0	2 128 0	2 108 0
New customers	generation basis	Tcal	104 0	120 0	0 0	0 0	0 0	0 0	0 0	0 0	0 0	0 0	0 0
Contingency Requirements (LU or 15%)													
Bishkek DH System	15 0%	Gcal/hr	135 0	140 3	147 8	155 0	155 0	155 0	155 0	155 0	155 0	155 0	155 0
Local DH System	*15 0%*	Gcal/hr	50 0	50 0	0 0	0 0	0 0	0 0	0 0	0 0	0 0	0 0	0 0
District heating pipe losses													
Bishkek DH system		%	25 01%	25 00%	21 23%	19 99%	16 64%	13 95%	13 69%	13 80%	13 91%	14 02%	14 13%
Local DH system		%	10 00%	10 00%	10 00%	10 00%	10 00%	10 00%	10 00%	10 00%	10 00%	10 00%	10 00%
DH pumping at booster stations		kWh/Gcal	7 70	7 70	5 60	5 60	5 60	5 60	5 60	5 60	5 60	5 60	5 60
CHP plant piping efficiency		%	96 0%										
Process Steam													
Energy	generation basis	Tcal	571 4	642 9	785 7	785 7	785 7	785 7	785 7	785 7	785 7	785 7	785 7
Piping losses		%	30 00%	30 00%	30 00%	30 00%	30 00%	30 00%	30 00%	30 00%	30 00%	30 00%	30 00%
Ratio of annual maximum demand to annual average demand			2 0										
Heat exchange efficiency steam > hot water		Gcal/hr/Gcal/hr	1 0										
Electric Energy			1995	1996	1997	1998	1999	2000	2001	2002	2003	2004	2005
Maximum Demand local customers	generation basis	MW	425 0	434 2	443 6	453 3	463 1	473 2	483 4	493 9	504 6	515 6	526 8
annual growth		%		2 2%	2 2%	2 2%	2 2%	2 2%	2 2%	2 2%	2 2%	2 2%	2 2%
Disposition of energy local customers	sales basis	GWh	1 002 0	1 052 0	1 094 0	1 127 0	1 161 0	1 196 0	1 232 0	1 269 0	1 307 0	1 346 0	1 386 0
annual growth		%		5 0%	4 0%	3 0%	3 0%	3 0%	3 0%	3 0%	3 0%	3 0%	3 0%
T&D losses		%	12 0%	12 0%	12 0%	11 0%	11 0%	11 0%	11 0%	11 0%	10 0%	10 0%	10 0%
Contingency requirement (LU or 15% max)	15 0%	MW	80 0	81 6	83 0	84 8	86 6	88 4	90 3	92 2	94 2	96 2	98 3
Grid capability		MW	200 0	200 0	200 0	200 0	200 0	200 0	200 0	200 0	200 0	200 0	200 0
	esc after 2005												
Grid electricity price forecast	0 0%	$/kWh	0 0300	0 0300	0 0300	0 0300	0 0300	0 0300	0 0300	0 0300	0 0300	0 0300	0 0300
GTCC unit addition block size		MW	75 0										
GTCC capability		MW	0 0	0 0	0 0	0 0	0 0	0 0	0 0	0 0	0 0	0 0	0 0
GTCC fuel cost		$/kWh	0 0189	0 0189	0 0189	0 0189	0 0189	0 0189	0 0189	0 0189	0 0189	0 0189	0 0189
GTCC annual average heat rate		kcal/kWh	2 008 1										
Maximum Demand transfers	generation basis	MW	100 0	102 2	104 4	106 7	109 0	111 3	113 7	116 2	118 7	121 3	123 9
annual growth		%		2 2%	2 2%	2 2%	2 2%	2 2%	2 2%	2 2%	2 2%	2 2%	2 2%
Disposition of energy transfers	sales basis	GWh	350 0	357 6	365 4	373 3	381 4	389 7	398 1	406 8	415 6	424 6	433 8
annual growth		%		2 2%	2 2%	2 2%	2 2%	2 2%	2 2%	2 2%	2 2%	2 2%	2 2%
Fuel Price Forecast	esc after 2005												
Coal	0 0%	$/Gcal	8 80	8 80	8 80	8 80	8 80	8 80	8 80	8 80	8 80	8 80	8 80
Mazut	0 0%	$/Gcal	10 00	10 00	10 00	10 00	10 00	10 00	10 00	10 00	10 00	10 00	10 00
Natural Gas	0 0%	$/Gcal	9 40	9 40	9 40	9 40	9 40	9 40	9 40	9 40	9 40	9 40	9 40

Fuel Mix for Supply Resources		1995	1996	1997	1998	1999	2000	2001	2002	2003	2004	2005
TES 1 CHP boilers												
Coal	%	75 0%	97 0%	97 0%	97 0%	97 0%	97 0%	97 0%	97 0%	97 0%	97 0%	97 0%
Mazut	%	5 0%	2 0%	2 0%	2 0%	2 0%	2 0%	2 0%	2 0%	2 0%	2 0%	2 0%
Natural Gas	%	20 0%	1 0%	1 0%	1 0%	1 0%	1 0%	1 0%	1 0%	1 0%	1 0%	1 0%
Weighted average fuel price	$/Gcal	8 98	8 83	8 83	8 83	8 83	8 83	8 83	8 83	8 83	8 83	8 83
Bishkek HOBs												
Coal	%	0 0%	0 0%	0 0%	0 0%	0 0%	0 0%	0 0%	0 0%	0 0%	0 0%	0 0%
Mazut	%	0 0%	0 0%	0 0%	0 0%	0 0%	0 0%	0 0%	0 0%	0 0%	0 0%	0 0%
Natural Gas	%	100 0%	100 0%	100 0%	100 0%	100 0%	100 0%	100 0%	100 0%	100 0%	100 0%	100 0%
Weighted average fuel price	$/Gcal	9 40	9 40	9 40	9 40	9 40	9 40	9 40	9 40	9 40	9 40	9 40
Local DH Boilers												
Coal	%	0 0%	0 0%	0 0%	0 0%	0 0%	0 0%	0 0%	0 0%	0 0%	0 0%	0 0%
Mazut	%	0 0%	0 0%	0 0%	0 0%	0 0%	0 0%	0 0%	0 0%	0 0%	0 0%	0 0%
Natural Gas	%	100 0%	100 0%	100 0%	100 0%	100 0%	100 0%	100 0%	100 0%	100 0%	100 0%	100 0%
Weighted average fuel price	$/Gcal	9 40	9 40	9 40	9 40	9 40	9 40	9 40	9 40	9 40	9 40	9 40

Boiler efficiencies		1995	1996	1997	1998	1999	2000	2001	2002	2003	2004	2005
Bishkek CHP boilers (TES 1)		87 5%	87 3%	87 1%	86 9%	88 5%	88 4%	88 3%	88 3%	88 2%	88 0%	87 8%
Bishkek HOBs (TES 1 and TES 2)	%	89 0%	89 0%	89 0%	89 0%	89 0%	89 0%	89 0%	89 0%	89 0%	89 0%	89 0%
Local HOBs (Frunze JAL)												
Coal	%	0 0%	0 0%	0 0%	0 0%	0 0%	0 0%	0 0%	0 0%	0 0%	0 0%	0 0%
Mazut	%	89 0%	89 0%	89 0%	89 0%	89 0%	89 0%	89 0%	89 0%	89 0%	89 0%	89 0%
Natural gas	%	83 0%	83 0%	83 0%	83 0%	83 0%	83 0%	83 0%	83 0%	83 0%	83 0%	83 0%
Weighted average	%	*83 0%*	*83 0%*	*83 0%*	*83 0%*	*83 0%*	*83 0%*	*83 0%*	*83 0%*	*83 0%*	*83 0%*	*83 0%*
Process steam generation	Gcal/hr add l heat input per Gcal/hr steam	0 63	0 63	0 63	0 63	0 62	0 62	0 62	0 62	0 62	0 63	0 63

Performance Degradation		
Annual change in boiler efficiency	%	-0 20%
Annual change in electric capability	%	0 10%

Fuel Allocation for Cogeneration Energy		
Methodology #A CHP advantage devoted to DH energy		
Electric power only production efficiency	%	30 0%
Methodology #B CHP advantage devoted to electric energy		
Distric heat only production efficiency	%	87 0%
Allocation Factors for TES 1 CHP Plant O&M and Investment		
% allocated to electric production	%	75 0%
% allocated to district heating production	%	12 5%
% allocated to process steam production	%	12 5%

Economic and Financial Parameters		1995 2000	2001 2014
Capital cost real escalation rates			
Western	%	0 00%	0 00%
Russian	%	0 00%	0 00%
Kyrgyz labor	%	16 90%	6 60%
Kyrgyz material	%	1 70%	0 90%
Kyrgyz equipment	%	1 50%	3 20%
Discount Rate for NPV Calculation	%	12 00%	
Physical contingencies + technical assistance & training	% of direct costs	12 50%	

Composite escalation factors	1995	1996	1997	1998	1999	2000	2001	2002	2003	2004	2005
Western	1 000	1 000	1 000	1 000	1 000	1 000	1 000	1 000	1 000	1 000	1 000
Russian	1 000	1 000	1 000	1 000	1 000	1 000	1 000	1 000	1 000	1 000	1 000
Kyrgyz labor	1 000	1 169	1 367	1 598	1 867	2 183	2 327	2 481	2 645	2 819	3 005
Kyrgyz material	1 000	1 017	1 034	1 052	1 070	1 088	1 098	1 108	1 118	1 128	1 138
Kyrgyz equipment	1 000	1 015	1 030	1 046	1 061	1 077	1 112	1 147	1 184	1 222	1 261

Load Forecast Development

Study Year Calendar Year		1 1995	2 1996	3 1997	4 1998	5 1999	6 2000	7 2001	8 2002	9 2003	10 2004	11 2005
District heating pipe losses												
Bishkek DH system	/	25 01%	25 00%	21 23 /	19 99%	16 64 /	13 95 /	13 69%	13 80%	13 91 %	14 02%	14 13 /
Local DH system	%	10 00%	10 00%	10 00 /	10 00 /	10 00%	10 00 /	10 00 /	10 00%	10 00%	10 00 /	10 00%
T&D losses (in Bishkek)	/	12 0 %	12 0 /	12 0%	11 0%	11 0 /	11 0 /	11 0%	11 0%	10 0%	10 0%	10 0 /
Thermal Energy												
Bishkek DH System Hot Water												
Maximum Demand (generation basis)												
Existing customers	Gcal/hr	900 0	935 0	985 0	968 0	941 0	914 0	888 0	861 0	834 0	808 0	782 0
New customers	Gcal/hr	0.0	0.0	0.0	0.0	0.0	0.0	0.0	0.0	0.0	0.0	0.0
Total Maximum Demand	*Gcal/hr*	*900 0*	*935 0*	*985 0*	*968 0*	*941 0*	*914 0*	*888 0*	*861 0*	*834 0*	*808 0*	*782 0*
Disposition of Energy												
Existing customers	Tcal	2 000 0	2 100 0	2 285 0	2 273 0	2 230 0	2 209 0	2 188 0	2 168 0	2 148 0	2 128 0	2 108 0
New customers	Tcal	0.0	0.0	0.0	0.0	0.0	0.0	0.0	0.0	0.0	0.0	0.0
Total (sales basis)	Tcal	2 000 0	2 100 0	2 285 0	2 273 0	2 230 0	2 209 0	2 188 0	2 168 0	2 148 0	2 128 0	2 108 0
Distribution losses												
Existing customers	Tcal	667 0	700 0	615 9	567 9	445 1	358 1	347 0	347 1	347 1	347 0	346 9
New customers	Tcal	0.0	0.0	0.0	0.0	0.0	0.0	0.0	0.0	0.0	0.0	0.0
Total Disposition of Energy	*Tcal*	*2 667 0*	*2 800 0*	*2 900 9*	*2 840 9*	*2 675 1*	*2 567 1*	*2 535 0*	*2 515 1*	*2 495 1*	*2 475 0*	*2 454 9*
Bishkek DH System Process Steam												
Energy generation basis	Tcal	571 4	642 9	785 7	785 7	785 7	785 7	785 7	785 7	785 7	785 7	785 7
Energy sales basis	Tcal	400 0	450 0	550 0	550 0	550 0	550 0	550 0	550 0	550 0	550 0	550 0
Local DH System Hot Water												
Maximum Demand (generation basis)	Gcal/hr	46 0	53 0	0 0	0 0	0 0	0 0	0 0	0 0	0 0	0 0	0 0
Disposition of Energy												
Existing customers	Tcal	93 6	108 0	0 0	0 0	0 0	0 0	0 0	0 0	0 0	0 0	0 0
Distribution losses	Tcal	10.4	12.0	0.0	0.0	0.0	0.0	0.0	0.0	0.0	0.0	0.0
Total Disposition of Energy	*Tcal*	104 0	120 0	0 0	0 0	0 0	0 0	0 0	0 0	0 0	0 0	0 0
Electric Energy												
Maximum Demand (generation basis)												
Local customers	MW	425 0	434 2	443 6	453 3	463 1	473 2	483 4	493 9	504 6	515 6	526 8
Transfers	MW	100 0	102 2	104 4	106 7	109 0	111 3	113 7	116 2	118 7	121 3	123 9
DH pumping power	MW	7.3	7.6	5.5	5.4	5.3	5.1	5.0	4.8	4.7	4.5	4.4
Total Maximum Demand	*MW*	*532 3*	*544 0*	*553 5*	*565 3*	*577 3*	*589 6*	*602 1*	*615 0*	*628 0*	*641 4*	*655 1*
Disposition of Energy												
Local customers (sales basis)	GWh	1 002 0	1 052 0	1 094 0	1 127 0	1 161 0	1 196 0	1 232 0	1 269 0	1 307 0	1 346 0	1 386 0
Transfers	GWh	350 0	357 6	365 4	373 3	381 4	389 7	398 1	406 8	415 6	424 6	433 8
DH pumping power	GWh	21.3	22.5	16.2	15.9	15.0	14.4	14.2	14.1	14.0	13.9	13.7
Total consumption	GWh	1 373 3	1 432 1	1 475 6	1 516 2	1 557 4	1 600 0	1 644 3	1 689 8	1 736 6	1 784 5	1 833 6
T&D losses	GWh	187.3	195.3	201.2	187.4	192.5	197.8	203.2	208.9	193.0	198 3	203.7
Total Disposition of Energy	*GWh*	*1 560 6*	*1 627 4*	*1 676 8*	*1 703 6*	*1 749 8*	*1 797 8*	*1 847 5*	*1 898 7*	*1 929 5*	*1 982 7*	*2 037 3*

Summary of Load Forecasts (generation basis)

Calendar Year		1995	1996	1997	1998	1999	2000	2001	2002	2003	2004	2005
Thermal Load to be Served by Bishkek DH System												
Maximum Demand Hot Water	Gcal/hr	900 0	935 0	985 0	968 0	941 0	914 0	888 0	861 0	834 0	808 0	782 0
Thermal Energy Hot Water	Tcal	2,667 0	2 800 0	2 900 9	2 840 9	2 675 1	2 567 1	2 535 0	2 515 1	2 495 1	2 475 0	2,454 9
Maximum Demand Process Steam	Gcal/hr	130 5	146 8	179 4	179 4	179 4	179 4	179 4	179 4	179 4	179 4	179 4
Thermal Energy Process Steam	Tcal	571 4	642 9	785 7	785 7	785 7	785 7	785 7	785 7	785 7	785 7	785 7
Thermal Load to be Served by Local DH System												
Maximum Demand Hot Water	Gcal/hr	46 0	53 0	0 0	0 0	0 0	0 0	0 0	0 0	0 0	0 0	0 0
Thermal Energy Hot Water	Tcal	104 0	120 0	0 0	0 0	0 0	0 0	0 0	0 0	0 0	0 0	0 0
Maximum Demand Process Steam	Gcal/hr	0 0	0 0	0 0	0 0	0 0	0 0	0 0	0 0	0 0	0 0	0 0
Thermal Energy Process Steam	Tcal	0 0	0 0	0 0	0 0	0 0	0 0	0 0	0 0	0 0	0 0	0 0
Total Thermal Load to be Served												
Maximum Demand Hot Water	Gcal/hr	946 0	988 0	985 0	968 0	941 0	914 0	888 0	861 0	834 0	808 0	782 0
Thermal Energy Hot Water	Tcal	2 771 0	2 920 0	2 900 9	2 840 9	2 675 1	2 567 1	2 535 0	2 515 1	2 495 1	2 475 0	2 454 9
Maximum Demand Process Steam	Gcal/hr	130 5	146 8	179 4	179 4	179 4	179 4	179 4	179 4	179 4	179 4	179 4
Thermal Energy Process Steam	Tcal	571 4	642 9	785 7	785 7	785 7	785 7	785 7	785 7	785 7	785 7	785 7
Total Electric Load Forecast												
Maximum Demand	MW	532 3	544 0	553 5	565 3	577 3	589 6	602 1	615 0	628 0	641 4	655 1
Electric Energy	GWh	1,560 6	1,627 4	1,676 8	1,703 6	1,749 8	1,797 8	1,847 5	1,898 7	1,929 5	1,982 7	2,037 3

Load/Capa[illegible] Balance Case No 4 Base Assumptio[illegible]

Study Year		1	2	3	4	5	6	7	8	9	10	11
Calendar Year		1995	1996	1997	1998	1999	2000	2001	2002	2003	2004	2005
Electric Energy												
Maximum Demand	MW	532 3	544 0	553 5	565 3	577 3	589 6	602 1	615 0	628 0	641 4	655 1
Existing capacity resources												
TES 1 CHP Plant	MW	550 5	549 9	549 4	549 4	633 1	591 4	591 4	591 4	590 8	590 2	589 6
Grid electric capacity	MW	200 0	200 0	200 0	200 0	200 0	200 0	200 0	200 0	200 0	200 0	200 0
GTCC	MW	0.0	0.0	0.0	0.0	0.0	0.0	0.0	0.0	0.0	0.0	0 0
Total capacity resources before additions	MW	750 5	749 9	749 4	749 4	833 1	791 4	791 4	791 4	790 8	790 2	789 6
/ reserve before capacity additions	/	41 0/	37 9%	35 4/	32 6%	44 3/	34 2%	31 4%	28 7/	25 9%	23 2/	20 5/
Capacity resources required	MW	612 3	625 6	636 6	650 1	663 9	678 0	692 5	707 2	722 2	737 6	753 4
Additional capacity required (minimum)	MW	0 0	0 0	0 0	0 0	0 0	0 0	0 0	0 0	0 0	0 0	0 0
Capacity additions/retirements												
TES 1 CHP Rehabilitation (install TG11 or equiv)	MW	0 0	0 0	0 0	83 7	0 0	0 0	0 0	0 0	0 0	0 0	0 0
TES 1 CHP Retirement of Unit 1 and 2	MW	0 0	0 0	0 0	0 0	(41 7)	0 0	0 0	0 0	0 0	0 0	0 0
Grid electric capacity additions	MW	0 0	0 0	0 0	0 0	0 0	0 0	0 0	0 0	0 0	0 0	0 0
GTCC capacity additions	MW	0 0	0 0	0 0	0 0	0 0	0 0	0 0	0 0	0 0	0 0	0 0
Total capacity resources after additions	MW	750 5	749 9	749 4	833 1	833 1	791 4	791 4	791 4	790 8	790 2	789 6
% reserve after capacity additions	%	41 0%	37 9%	35 4/	47 4%	44 3/	34 2%	31 4%	28 7/	25 9%	23 2/	20 5%
Thermal Energy - Hot Water												
Bishkek DH System												
Maximum Demand	Gcal/hr	900 0	935 0	985 0	968 0	941 0	914 0	888 0	861 0	834 0	808 0	782 0
Existing capacity resources												
TES 1 CHP Plant												
nominal HW capacity	Gcal/hr	740 0	740 0	740 0	895 0	895 0	811 4	811 4	811 4	811 4	811 4	811 4
peaking HW capacity	Gcal/hr	281.3	265.0	232.4	232.4	232.4	229.0	229.0	229.0	229.0	229.0	229.0
total	Gcal/hr	1 021 3	1 005 0	972 4	1 127 4	1 127 4	1 040 4	1 040 4	1 040 4	1 040 4	1 040 4	1 040 4
TES 1HOBs	Gcal/hr	300 0	300 0	300 0	300 0	300 0	300 0	300 0	300 0	300 0	300 0	300 0
TES 2 HOBs	Gcal/hr	192 0	192 0	192 0	192 0	192 0	192 0	192 0	192 0	192 0	192 0	192 0
Existing HOBs Frunze	Gcal/hr	0 0	0 0	150 0	150 0	150 0	150 0	150 0	150 0	150 0	150 0	0 0
Existing HOBs JAL	Gcal/hr	0 0	0 0	40 0	40 0	40 0	40 0	40 0	40 0	40 0	40 0	40 0
New HOBs in local DH system	Gcal/hr	0.0	0.0	0.0	0.0	0.0	0.0	0.0	0.0	0.0	0.0	0.0
Total capacity resources before additions	Gcal/hr	1 513 3	1 497 0	1 654 4	1 809 4	1 809 4	1 722 4	1 722 4	1 722 4	1 722 4	1 722 4	1 572 4
/ reserve before capacity additions	%	68 1/	60 1/	68 0%	86 9%	92 3%	88 4/	94 0%	100 0%	106 5/	113 2/	101 1/
Capacity resources required	Gcal/hr	1 035 0	1 075 3	1 132 8	1 123 0	1 096 0	1 069 0	1 043 0	1 016 0	989 0	963 0	937 0
Additional capacity required (minimum)	Gcal/hr	0 0	0 0	0 0	0 0	0 0	0 0	0 0	0 0	0 0	0 0	0 0
Capacity additions/retirements												
New HOB capacity	Gcal/hr	0 0	0 0	0 0	0 0	0 0	0 0	0 0	0 0	0 0	0 0	0 0
Total capacity resources after additions	Gcal/hr	1 513 3	1 497 0	1 654 4	1 809 4	1 809 4	1 722 4	1 722 4	1 722 4	1 722 4	1 722 4	1 572 4
/ reserve after capacity additions	%	68 1/	60 1%	68 0%	86 9%	92 3%	88 4/	94 0/	100 0%	106 5/	113 2%	101 1/
Local DH System												
Maximum Demand	Gcal/hr	46 0	53 0	0 0	0 0	0 0	0 0	0 0	0 0	0 0	0 0	0 0
Existing capacity resources												
Existing HOBs Frunze	Gcal/hr	150 0	150 0	0 0	0 0	0 0	0 0	0 0	0 0	0 0	0 0	0 0
Existing HOBs JAL	Gcal/hr	40 0	40 0	0 0	0 0	0 0	0 0	0 0	0 0	0 0	0 0	0 0
New HOBs capacity additions	Gcal/hr	0.0	0.0	0.0	0.0	0.0	0.0	0.0	0.0	0.0	0.0	0.0
Total capacity resources before additions	Gcal/hr	190 0	190 0	0 0	0 0	0 0	0 0	0 0	0 0	0 0	0 0	0 0
% reserve before capacity additions	/	313 0%	258 5/	n/a	n/a	n/a	n/a	n/a	n/a	n/a	n/a	n/a
Capacity resources required	Gcal/hr	96 0	103 0	0 0	0 0	0 0	0 0	0 0	0 0	0 0	0 0	0 0
Additional capacity required (minimum)	Gcal/hr	0 0	0 0	0 0	0 0	0 0	0 0	0 0	0 0	0 0	0 0	0 0
Capacity additions/retirements												
New HOB capacity	Gcal/hr	0 0	0 0	0 0	0 0	0 0	0 0	0 0	0 0	0 0	0 0	0 0
Frunze boiler retirements	Gcal/hr	0.0	0.0	0.0	0.0	0.0	0.0	0 0	0.0	0 0	0.0	0.0
Total capacity resources after additions	Gcal/hr	190 0	190 0	0 0	0 0	0 0	0 0	0 0	0 0	0 0	0 0	0 0
/ reserve after capacity additions	/	313 0/	258 5%	n/a	n/a	n/a	n/a	n/a	n/a	n/a	n/a	n/a
Thermal Energy Process Steam												
Maximum Demand	Gcal/hr	130 5	146 8	179 4	179 4	179 4	179 4	179 4	179 4	179 4	179 4	179 4
Existing capacity resources (TES 1 CHP)	Gcal/hr	411 8	411 8	411 8	411 8	411 8	408 4	408 4	408 4	408 4	408 4	408 4
/ reserve	%	215 6/	180 6%	129 6/	129 6/	129 6/	127 7%	127 7/	127 7/	127 7/	127 7%	127 7/

Energy Production/Fuel Consumption Summary

Case Number 4 Base Assumptions

Study Year		1	2	3	4	5	6	7	8	9	10	11
Calendar Year		1995	1996	1997	1998	1999	2000	2001	2002	2003	2004	2005
Energy Production												
Electric Energy Generation												
Bishkek CHP Plant (TES 1)	GWh	1 560 4	1 626 7	1 675 3	1 703 6	1 749 8	1 797 0	1 845 9	1 895 9	1 925 0	1 976 4	2 028 3
Grid electric	GWh	0 2	0 7	1 5	0 0	0 0	0 8	1 6	2 8	4 5	6 4	8 9
GTCC	GWh	0.0	0.0	0.0	0.0	0.0	0.0	0.0	0.0	0.0	0.0	0.0
Total	GWh	1 560 6	1 627 4	1 676 8	1 703 6	1 749 8	1 797 8	1 847 5	1 898 7	1 929 5	1 982 7	2 037 3
Thermal Energy Generation												
District heating (heat, hot water)												
Bishkek CHP Plant (TES 1)	Tcal	2 483 2	2 586 9	2 661 7	2 657 2	2 563 2	2 531 0	2 511 8	2 500 7	2 487 5	2 470 9	2 452 8
Bishkek HOBs (TES 1 and TES 2)	Tcal	183 9	213 1	239 1	183 7	112 0	36 2	23 3	14 4	7 6	4 1	2 0
Local DH System HOBs	Tcal	104.0	120.0	0.0	0.0	0.0	0.0	0.0	0.0	0.0	0.0	0.0
Total	Tcal	2 771 0	2 920 0	2 900 9	2 840 9	2 675 1	2 567 1	2 535 0	2,515 1	2 495 1	2 475 0	2 454 9
Process steam												
Bishkek DH system (TES 1)	Tcal	571 4	642 9	785 7	785 7	785 7	785 7	785 7	785 7	785 7	785 7	785 7
Fuel Consumption												
Bishkek DH System												
Coal	Tcal	4 907 4	6 654 5	6 941 4	6 951 4	6 893 0	7 003 2	7 126 2	7 257 8	7 374 2	7 521 5	7 669 3
Mazut	Tcal	327 2	137 2	143 1	143 3	142 1	144 4	146 9	149 6	152 0	155 1	158 1
Natural gas	Tcal	1,515.2	308 1	340.2	278.0	196.9	112.8	99.6	91.0	84.6	82.2	81.3
Total	Tcal	6 749 7	7 099 8	7 424 8	7 372 7	7 232 0	7 260 4	7 372 7	7 498 4	7 610 8	7 758 7	7 908 8
Local DH System												
Coal	Tcal	0 0	0 0	0 0	0 0	0 0	0 0	0 0	0 0	0 0	0 0	0 0
Mazut	Tcal	0 0	0 0	0 0	0 0	0 0	0 0	0 0	0 0	0 0	0 0	0 0
Natural gas	Tcal	125.3	144.6	0.0	0.0	0.0	0.0	0.0	0.0	0.0	0.0	0.0
Total	Tcal	125 3	144 6	0 0	0 0	0 0	0 0	0 0	0 0	0 0	0 0	0 0
GTCC natural gas	Tcal	0 0	0 0	0 0	0 0	0 0	0 0	0 0	0 0	0 0	0 0	0 0
Total Fuel Consumption	Tcal	6 875 0	7 244 4	7 424 8	7 372 7	7 232 0	7 260 4	7 372 7	7 498 4	7 610 8	7 758 7	7 908 8
/ by type												
Coal	/	71 4/	91 9%	93 5%	94 3%	95 3/	96 5/	96 7/	96 8%	96 9%	96 9%	97 0%
Mazut	%	4 8/	1 9%	1 9%	1 9%	2 0%	2 0%	2 0%	2 0%	2 0%	2 0%	2 0%
Natural gas	/	23.9%	6.2%	4.6/	3.8/	2.7/	1.6/	1.4/	1.2/	1.1%	1.1/	1.0/
Total	/	100 0%	100 0%	100 0%	100 0%	100 0%	100 0%	100 0%	100 0%	100 0%	100 0%	100 0%

Generatin[illegible]ource Characteristics

Case Number 4 Base Assumptions

Study Year			1	2	3	4	5	6	7	8	9	10	11
Calendar Year			1995	1996	1997	1998	1999	2000	2001	2002	2003	2004	2005
TES 1 CHP Plant			1995	1996	1997	1998	1999	2000	2001	2002	2003	2004	2005
Electric Capability													
Unit #1		MW	35 0	35 0	35 0	35 0	35 0	0 0	0 0	0 0	0 0	0 0	0 0
Unit #2		MW	25 0	25 0	25 0	25 0	25 0	0 0	0 0	0 0	0 0	0 0	0 0
Unit #3		MW	50 0	50 0	50 0	50 0	50 0	50 0	50 0	50 0	50 0	50 0	50 0
Unit #4		MW	35 0	35 0	35 0	35 0	35 0	35 0	35 0	35 0	35 0	35 0	35 0
Unit #5		MW	35 0	35 0	35 0	35 0	35 0	35 0	35 0	35 0	35 0	35 0	35 0
Unit #6		MW	86 0	86 0	86 0	86 0	86 0	86 0	86 0	86 0	86 0	86 0	86 0
Unit #7		MW	60 0	60 0	60 0	60 0	60 0	60 0	60 0	60 0	60 0	60 0	60 0
Unit #8		MW	60 0	60 0	60 0	60 0	60 0	60 0	60 0	60 0	60 0	60 0	60 0
Unit #9		MW	86 0	86 0	86 0	86 0	86 0	86 0	86 0	86 0	86 0	86 0	86 0
Unit #10		MW	86 0	86 0	86 0	86 0	86 0	86 0	86 0	86 0	86 0	86 0	86 0
Unit #11	0	MW	0.0	0.0	0.0	90.0	90.0	90.0	90.0	90.0	90.0	90.0	90.0
Total		MW	558 0	558 0	558 0	648 0	648 0	588 0	588 0	588 0	588 0	588 0	588 0
Largest Unit		MW	86 0	86 0	86 0	90 0	90 0	90 0	90 0	90 0	90 0	90 0	90 0
		MW net	80 0	80 0	80 0	83 7	83 7	83 7	83 7	83 7	83 7	83 7	83 7
DH Capability Hot Water													
Unit #1		Gcal/hr	35 0	35 0	35 0	35 0	35 0	0 0	0 0	0 0	0 0	0 0	0 0
Unit #2		Gcal/hr	48 6	48 6	48 6	48 6	48 6	0 0	0 0	0 0	0 0	0 0	0 0
Unit #3		Gcal/hr	51 0	51 0	51 0	51 0	51 0	51 0	51 0	51 0	51 0	51 0	51 0
Unit #4		Gcal/hr	97 0	97 0	97 0	97 0	97 0	97 0	97 0	97 0	97 0	97 0	97 0
Unit #5		Gcal/hr	97 0	97 0	97 0	97 0	97 0	97 0	97 0	97 0	97 0	97 0	97 0
Unit #6		Gcal/hr	102 6	102 6	102 6	102 6	102 6	102 6	102 6	102 6	102 6	102 6	102 6
Unit #7		Gcal/hr	61 0	61 0	61 0	61 0	61 0	61 0	61 0	61 0	61 0	61 0	61 0
Unit #8		Gcal/hr	61 0	61 0	61 0	61 0	61 0	61 0	61 0	61 0	61 0	61 0	61 0
Unit #9		Gcal/hr	102 6	102 6	102 6	102 6	102 6	102 6	102 6	102 6	102 6	102 6	102 6
Unit #10		Gcal/hr	103 0	103 0	103 0	103 0	103 0	103 0	103 0	103 0	103 0	103 0	103 0
Unit #11		Gcal/hr	0.0	0.0	0.0	155.0	155.0	155.0	155.0	155.0	155.0	155.0	155.0
Total		Gcal/hr	758 8	758 8	758 8	913 8	913 8	830 2	830 2	830 2	830 2	830 2	830 2
Largest Unit		Gcal/hr	103 0	103 0	103 0	155 0	155 0	155 0	155 0	155 0	155 0	155 0	155 0
Boiler Efficiencies			1999	2003									
w/o Rehabilitation		%	87 5/										
w/Rehabilitation		%	89 5%										
Boiler #14		/	87 5%	87 3%	87 1/	86 9%	89 5/	89 5%	89 5/	89 5%	89 5%	89 3/	89 1/
Boiler #15		%	87 5/	87 3%	87 1%	86 9%	89 5%	89 5/	89 5/	89 5%	89 5/	89 3%	89 1%
Boiler #16		/	87 5%	87 3/	87 1%	86 9%	89 5%	89 5/	89 5%	89 5/	89 5%	89 3%	89 1/
Boiler #17		/	87 5%	87 3/	87 1/	86 9%	89 5/	89 5%	89 5/	89 5%	89 5/	89 3/	89 1/
Boiler #18		%	87 5/	87 3%	87 1/	86 9%	89 5/	89 5/	89 5/	89 5%	89 5/	89 3/	89 1%
Boiler #19		/	87 5%	87 3/	87 1%	86 9%	89 5%	89 5/	89 5%	89 5/	89 5%	89 3%	89 1/
Boiler #20		/	87 5/	87 3%	87 1/	86 9%	89 5/	89 5/	89 5/	89 5%	89 5/	89 3/	89 1/
Boiler #21		%	87 5%	87 3%	87 1%	86 9%	86 7%	86 5/	86 3%	86 1%	85 9%	85 7%	85 5%
Boiler #22		%	87 5/	87 3%	87 1/	86 9%	86 7/	86 5/	86 3%	86 1/	85 9%	85 7%	85 5/
Boiler #23		/	87 5/	87 3%	87 1%	86 9%	86 7%	86 5%	86 3/	86 1%	85 9%	85 7/	85 5/
Boiler #24		/	87.5%	87.3%	87.1%	86.9%	86.7%	86.5%	86.3%	86.1%	85.9%	85 7%	85.5%
Weighted average		%	87 5/	87 3%	87 1/	86 9%	88 5/	88 4/	88 3%	88 3%	88 2/	88 0%	87 8%

Calendar year		1995	1996	1997	1998	1999	2000	2001	2002	2003	2004	2005
TES 1 CHP Plant Electrical Rating w/o Rehabilitation												
@ Zero DH Load	MW gross	504 0	504 0	504 0	504 0	504 0	504 0	504 0	504 0	504 0	504 0	504 0
@ 35/ DH Load	MW gross	596 5	596 5	596 5	596 5	596 5	565 5	565 5	565 5	565 5	565 5	565 5
@ 75/ DH Load	MW gross	586 5	586 5	586 5	586 5	586 5	541 0	541 0	541 0	541 0	541 0	541 0
@ Full DH Load	MW gross	550 5	550 5	550 5	550 5	550 5	505 5	505 5	505 5	505 5	505 5	505 5
Change in TES 1 Electrical Rating w/ Rehabilitation												
@ Zero DH Load	MW gross	0 0	0 0	0 0	75 0	0 0	0 0	0 0	0 0	0 0	0 0	0 0
@ 35% DH Load	MW gross	0 0	0 0	0 0	54 0	0 0	0 0	0 0	0 0	0 0	0 0	0 0
@ 75/ DH Load	MW gross	0 0	0 0	0 0	99 4	0 0	0 0	0 0	0 0	0 0	0 0	0 0
@ Full DH Load	MW gross	0 0	0 0	0 0	90 0	0 0	0 0	0 0	0 0	0 0	0 0	0 0
TES 1 CHP Plant Electrical Rating w/ Rehabilitation												
@ Zero DH Load	MW gross	504 0	504 0	504 0	579 0	579 0	579 0	579 0	579 0	579 0	579 0	579 0
@ 35/ DH Load	MW gross	596 5	596 5	596 5	650 5	650 5	619 5	619 5	619 5	619 5	619 5	619 5
@ 75/ DH Load	MW gross	586 5	586 5	586 5	685 9	685 9	640 4	640 4	640 4	640 4	640 4	640 4
@ Full DH Load	MW gross	550 5	550 5	550 5	640 5	640 5	595 5	595 5	595 5	595 5	595 5	595 5
Auxiliary power consumption	/	7 0%	7 0%	7 0%	7 0%	7 0%	7 0%	7 0%	7 0%	7 0%	7 0%	7 0%
@ Zero DH Load	MW net	468 7	468 7	468 7	538 5	538 5	538 5	538 5	538 5	538 5	538 5	538 5
@ 35/ DH Load	MW net	554 7	554 7	554 7	605 0	605 0	576 1	576 1	576 1	576 1	576 1	576 1
@ 75/ DH Load	MW net	545 4	545 4	545 4	637 9	637 9	595 6	595 6	595 6	595 6	595 6	595 6
@ Full DH Load	MW net	512 0	512 0	512 0	595 7	595 7	553 8	553 8	553 8	553 8	553 8	553 8
TES 1 CHP Plant DH/HW Rating												
@ Full DH Load (hot water only)	Gcal/hr	740 0	740 0	740 0	895 0	895 0	811 4	811 4	811 4	811 4	811 4	811 4
@ Full DH Load (total DH incl process steam)	Gcal/hr	1 151 8	1 151 8	1 151 8	1 306 8	1 306 8	1 219 8	1 219 8	1 219 8	1 219 8	1 219 8	1 219 8
TES-1 HOBs												
DH Capability Hot Water												
Unit #1	Gcal/hr	100 0	100 0	100 0	100 0	100 0	100 0	100 0	100 0	100 0	100 0	100 0
Unit #2	Gcal/hr	100 0	100 0	100 0	100 0	100 0	100 0	100 0	100 0	100 0	100 0	100 0
Unit #3	Gcal/hr	100.0	100.0	100.0	100.0	100.0	100.0	100.0	100.0	100.0	100.0	100.0
Total	Gcal/hr	300 0	300 0	300 0	300 0	300 0	300 0	300 0	300 0	300 0	300 0	300 0
Boiler Efficiencies												
Unit #1	%	87 0%	87 0%	87 0%	87 0%	87 0%	87 0%	87 0%	87 0%	87 0%	87 0%	87 0%
Unit #2	/	87 0%	87 0%	87 0%	87 0%	87 0%	87 0/	87 0%	87 0%	87 0%	87 0%	87 0/
Unit #3	%	87.0%	87.0%	87.0%	87.0%	87.0%	87.0%	87.0%	87.0%	87.0%	87.0%	87.0%
Weighted average	%	87 0%	87 0%	87 0%	87 0/	87 0%	87 0%	87 0/	87 0%	87 0%	87 0%	87 0%
TES-2 HOBs												
DH Capability Hot Water												
Unit #1	Gcal/hr	96 0	96 0	96 0	96 0	96 0	96 0	96 0	96 0	96 0	96 0	96 0
Unit #2	Gcal/hr	96.0	96.0	96.0	96.0	96.0	96.0	96.0	96.0	96.0	96.0	96.0
Total	Gcal/hr	192 0	192 0	192 0	192 0	192 0	192 0	192 0	192 0	192 0	192 0	192 0
Boiler Efficiencies												
Unit #1	/	87 0%	87 0%	87 0%	87 0%	87 0%	87 0%	87 0%	87 0%	87 0%	87 0%	87 0%
Unit #2	%	87.0%	87.0%	87.0%	87.0%	87.0%	87.0%	87.0%	87.0%	87.0%	87.0%	87.0%
Weighted average	/	87 0%	87 0%	87 0%	87 0%	87 0%	87 0%	87 0%	87 0%	87 0%	87 0%	87 0%
Local DH System												
Frunze Unit #1	Gcal/hr	50 0	50 0	50 0	50 0	50 0	50 0	50 0	50 0	50 0	50 0	0 0
Frunze Unit #2	Gcal/hr	50 0	50 0	50 0	50 0	50 0	50 0	50 0	50 0	50 0	50 0	0 0
Frunze Unit #3	Gcal/hr	50 0	50 0	50 0	50 0	50 0	50 0	50 0	50 0	50 0	50 0	0 0
JAL Unit #1	Gcal/hr	20 0	20 0	20 0	20 0	20 0	20 0	20 0	20 0	20 0	20 0	20 0
JAL Unit #2	Gcal/hr	20.0	20.0	20.0	20.0	20.0	20.0	20 0	20.0	20.0	20.0	20.0
Total	Gcal/hr	190 0	190 0	190 0	190 0	190 0	190 0	190 0	190 0	190 0	190 0	40 0
Largest Unit	Gcal/hr	50 0	50 0	50 0	50 0	50 0	50 0	50 0	50 0	50 0	50 0	20 0
New capacity additions												
Mazut fired	Gcal/hr	0 0	0 0	0 0	0 0	0 0	0 0	0 0	0 0	0 0	0 0	0 0
Gas fired	Gcal/hr	0 0	0 0	0 0	0 0	0 0	0 0	0 0	0 0	0 0	0 0	50 0

Investment Schedules

Case Number 4 Base Assumptions

Summary of Investments

Study Year		1	2	3	4	5	6	7	8	9	10	11
Calendar Year		1995	1996	1997	1998	1999	2000	2001	2002	2003	2004	2005
Capital Expenditure Schedules												
Investment in Electric and Thermal Energy Supply												
Bishkek DH System												
TES 1 CHP Plant Rehabilitation	$000	0 0	0 0	16 578 9	5 037 8	0 0	0 0	0 0	0 0	0 0	0 0	0 0
Installation of new additional HOBs	$000	0 0	0 0	0 0	0 0	0 0	0 0	0 0	0 0	0 0	0 0	0 0
Local DH System												
Installation of new additional HOBs	$000	0 0	0 0	0 0	0 0	0 0	0 0	0 0	0 0	0 0	0 0	0 0
Bishkek Electric Supply												
New GTCC#1 75 MWe(net)	$000	0 0	0 0	0 0	0 0	0 0	0 0	0 0	0 0	0 0	0 0	0 0
New TG for TES 1 83 7 MWe(net)	$000	0 0	0 0	0 0	0 0	0 0	0 0	0 0	0 0	0 0	0 0	0 0
Investment in Electric Energy Transmission & Distribution System												
Ala Archa220/110kV 200 MW grid uprating	$000	0 0	0 0	0 0	0 0	0 0	0 0	0 0	0 0	0 0	0 0	0 0
Investment in District Heating Distribution System												
District heating system upgrades rehab and modernization	$000	0 0	2 897 5	14 786 4	8 912 6	3 149 6	0 0	0 0	0 0	0 0	0 0	0 0
District heating system ugrades extension of HW network	$000	0 0	0 0	0 0	0 0	0 0	0 0	0 0	0 0	0 0	0 0	0 0
Rehabilitation of Steam Distribution Network	$000	0 0	0 0	0 0	0 0	0 0	0 0	0 0	0 0	0 0	0 0	0 0
TOTAL ANNUAL CAPITAL EXPENDITURE	$000	0 0	2 897 5	31 365 3	13 950 5	3 149 6	0 0	0 0	0 0	0 0	0 0	0 0
Debt Service Schedules												
Investment in Electric and Thermal Energy Supply												
Bishkek DH System												
TES 1 CHP Plant Rehabilitation	$000	0 0	0 0	0 0	3 286 3	4 284 9	4 284 9	4 284 9	4 284 9	4 284 9	4 284 9	4 284 9
Installation of new additional HOBs	$000	0 0	0 0	0 0	0 0	0 0	0 0	0 0	0 0	0 0	0 0	0 0
Local DH System												
Installation of new additional HOBs	$000	0 0	0 0	0 0	0 0	0 0	0 0	0 0	0 0	0 0	0 0	0 0
Bishkek Electric Supply												
New GTCC#1 75 MWe(net)	$000	0 0	0 0	0 0	0 0	0 0	0 0	0 0	0 0	0 0	0 0	0 0
New TG for TES 1 83 7 MWe(net)	$000	0 0	0 0	0 0	0 0	0 0	0 0	0 0	0 0	0 0	0 0	0 0
Investment in Electric Energy Transmission & Distribution System												
Ala Archa220/110kV 200 MW grid uprating	$000	0 0	0 0	0 0	0 0	0 0	0 0	0 0	0 0	0 0	0 0	0 0
Investment in District Heating Distribution System												
District heating system upgrades rehab and modernization	$000	0 0	0 0	574 4	3 505 3	5 272 0	5 896 3	5 896 3	5 896 3	5 896 3	5 896 3	5 896 3
District heating system ugrades extension of HW network	$000	0 0	0 0	0 0	0 0	0 0	0 0	0 0	0 0	0 0	0 0	0 0
Rehabilitation of Steam Distribution Network	$000	0 0	0 0	0 0	0 0	0 0	0 0	0 0	0 0	0 0	0 0	0 0
TOTAL ANNUAL INVESTMENT COSTS	$000	0 0	0 0	574 4	3 505 3	5 272 0	5 896 3	5 896 3	5 896 3	5 896 3	5 896 3	5 896 3

Case 1a

Summary of Costs

Case Number 1 a DH Sensitivity

Study Year		1	2	3	4	5	6	7	8	9	10	11
Calendar Year		1995	1996	1997	1998	1999	2000	2001	2002	2003	2004	2005
Production Costs												
Primary Energy Expenses												
Coal	$000	43 185	58 560	61 195	62 023	63 368	64 886	66 097	67 066	68 294	69 681	71 079
Mazut	$000	3 272	1 372	1 434	1 453	1 485	1 520	1 549	1 571	1 600	1 633	1 665
Natural gas	$000	15 421	4 255	4 555	4 619	4 651	4 975	5 185	4 418	4 750	5 257	5 873
Grid Electric	$000	7	20	52	87	138	620	803	92	145	215	324
Total primary energy	$000	61 884	64 207	67 236	68 182	69 641	72 001	73 633	73 148	74 789	76 785	78 941
Operating and Maintenance Expenses												
Bishkek TES 1 CHP Plant	$000	11 000	12 342	13 904	15 727	17 864	19 240	21 089	23 115	24 647	27 052	29 724
Bishkek TES 1 and TES 2 HOBs	$000	304	358	375	351	316	320	297	92	67	59	55
Industrial steam distribution system	$000	144	160	178	199	223	252	274	299	327	357	390
District heating distribution system	$000	3 000	3 150	3 327	3 517	3 738	3 981	4 127	4 293	4 457	4 643	4 829
New GTCC plant	$000	0	0	0	0	0	0	0	0	0	0	0
Local DH system HOBs	$000	184	216	253	296	345	405	469	545	631	733	850
Total O&M	$000	14 632	16 226	18 036	20 091	22 487	24 198	26 256	28 345	30 129	32 843	35 848
Total Production Costs	$000	76 515	80 433	85 272	88 273	92 128	96 199	99 889	101 492	104 919	109 629	114 789
Investments												
TES 1 Rehabilitation and New HOBs	$000	0	0	0	0	0	0	0	0	0	0	0
New Self generation Capacity	$000	0	0	0	0	0	12 619	12 713	0	0	0	0
District Heating System Rehabilitation	$000	0	0	0	0	0	7 184	0	0	0	0	0
New HOBs for Local DH System	$000	0	0	0	0	0	0	830	848	2,600	2,660	0
Total Investment	$000	0	0	0	0	0	19 802	13 543	848	2 600	2 660	0
Total Annual Cost	$000	76 515	80 433	85 272	88 273	92 128	116 002	113 431	102 340	107 519	112 289	114 789

NPV of Costs		thru 2005	thru 2014
Primary energy expense	$000	410 859	531 776
O&M expense	$000	131,694	196,021
Subtotal production costs	$000	542 553	727 797
Investments	$000	18,295	18,295
Total Annual Costs	$000	560 848	746 092
End effect Adjustment	$000	(6,629)	(6,629)
Total Effective Cost	$000	554 218	739 463

Allocation of Costs **Case No** 1 a DH Sensitivity

Study Year		1	2	3	4	5	6	7	8	9	10	11
Calendar Year		1995	1996	1997	1998	1999	2000	2001	2002	2003	2004	2005
Production Costs												
Fuel and Primary Energy Expenses												
Electric Account												
Bishkek TES 1 CHP fuel	$000	33 171	33 941	34 965	35 698	36 904	38 154	39 318	40 252	41 241	42 632	44 040
New GTCC fuel	$000	0	0	0	0	0	0	0	0	0	0	0
Grid electric for electric loads	$000	7	20	52	85	136	611	791	91	143	212	319
Total primary energy	$000	33 178	33 961	35 016	35 783	37 040	38 764	40 109	40 343	41 384	42 844	44 359
District Heating Account												
Bishkek TES 1 CHP fuel	$000	20 374	20 900	21 426	21 533	21 695	21 917	21 986	22 224	22 445	22 457	22 462
Bishkek TES 1 and TES 2 HOBs fuel	$000	1 942	2 251	2 318	2 136	1 892	1 882	1 728	531	385	334	311
Local DH system HOBs fuel	$000	1 178	1 359	1 563	1 801	2 061	2 378	2 729	3 148	3 613	4 156	4 779
Grid electric for pumping power	$000	0	0	1	1	2	9	11	1	2	3	4
GTCC fuel for pumping power	$000	0	0	0	0	0	0	0	0	0	0	0
Bishkek TES 1 CHP fuel for pumping power	$000	524	541	555	552	558	564	569	571	575	585	596
Total primary energy	$000	24 017	25 052	25 863	26 023	26 207	26 750	27 024	26 475	27 020	27 535	28 153
Process Steam Account												
Bishkek TES 1 CHP fuel	$000	4 689	5 194	6 357	6 376	6 394	6 487	6 501	6 329	6 386	6 406	6 429
Operating and Maintenance Expenses												
Electric Account												
Bishkek TES 1 CHP Plant	$000	8 250	9 256	10 428	11 796	13 398	14 430	15 817	17 336	18 486	20 289	22 293
New GTCC	$000	0	0	0	0	0	0	0	0	0	0	0
Total O&M	$000	8 250	9 256	10 428	11 796	13 398	14 430	15 817	17 336	18 486	20 289	22 293
District Heating Account												
Bishkek TES 1 CHP Plant	$000	1 375	1 543	1 738	1 966	2 233	2 405	2 636	2 889	3 081	3 381	3 716
Bishkek TES 1 and TES 2 HOBs	$000	304	358	375	351	316	320	297	92	67	59	55
District heating distribution system	$000	3 000	3 150	3 327	3 517	3 738	3 981	4 127	4 293	4 457	4 643	4 829
Local DH system HOBs	$000	184	216	253	296	345	405	469	545	631	733	850
Total O&M	$000	4 863	5 267	5 693	6 130	6 633	7 111	7 529	7 820	8 236	8 816	9 450
Process Steam Account												
Bishkek TES 1 CHP Plant	$000	1 375	1 543	1 738	1 966	2 233	2 405	2 636	2 889	3 081	3 381	3 716
Process steam distribution system	$000	144	160	178	199	223	252	274	299	327	357	390
Total O&M	$000	1 519	1 703	1 916	2 165	2 456	2 657	2 911	3 189	3 408	3 738	4 105
Debt Service												
Electric Account												
TES 1 CHP Plant Rehabilitation	$000	0	0	0	0	0	0	0	0	0	0	0
New Self generating Capacity	$000	0	0	0	0	0	0	0	5 321	5 321	5 321	5 321
Ala Archa220/110kV 200 MW grid uprating	$000	0	0	0	0	0	0	0	0	0	0	0
Total	$000	0	0	0	0	0	0	0	5 321	5 321	5 321	5 321
District Heating Account												
TES 1 CHP Plant Rehabilitation	$000	0	0	0	0	0	0	0	0	0	0	0
New HOBs for Bishkek DH System	$000	0	0	0	0	0	0	0	0	0	0	0
New HOBs for Local DH System	$000	0	0	0	0	0	0	0	0	266	266	1 102
District Heating System Rehabilitation	$000	0	0	0	0	0	0	1 424	1,424	1,424	1 424	1 424
Total	$000	0	0	0	0	0	0	1 424	1 424	1 690	1 690	2 526
Process Steam Account												
TES 1 CHP Plant Rehabilitation	$000	0	0	0	0	0	0	0	0	0	0	0
Steam Distribution System Rehabilitation	$000	0	0	0	0	0	0	0	0	0	0	0
Total	$000	0	0	0	0	0	0	0	0	0	0	0

Partial Tariffs Case No 1 a DH Sensitivity

Study Year		1	2	3	4	5	6	7	8	9	10	11
Calendar Year		1995	1996	1997	1998	1999	2000	2001	2002	2003	2004	2005
Electric Account												
Total production costs	$000	41 428	43 217	45 444	47 579	50 438	53 194	55 926	57 679	59 869	63 133	66 652
Total carrying charges	$000	0	0	0	0	0	0	0	5,321	5 321	5,321	5 321
Total cost of service	$000	41 428	43 217	45 444	47 579	50 438	53 194	55 926	63 001	65 191	68 455	71 974
Total sales of electricity	GWh	1 352 0	1 409 6	1 459 4	1 500 3	1 542 4	1 585 7	1 630 1	1 675 8	1 722 6	1 770 6	1 819 8
Partial tariff production costs	cents/kWh	3 06	3 07	3 11	3 17	3 27	3 35	3 43	3 44	3 48	3 57	3 66
Partial tariff carrying charges	cents/kWh	0 00	0 00	0 00	0 00	0 00	0 00	0 00	0 32	0 31	0 30	0 29
Partial tariff all costs	cents/kWh	3 06	3 07	3 11	3 17	3 27	3 35	3 43	3 76	3 78	3 87	3 96
District Heating Account												
Total production costs	$000	28 880	30 319	31 555	32 153	32 840	33 861	34 552	34 295	35 256	36 351	37 603
Total carrying charges	$000	0	0	0	0	0	0	1,424	1,424	1,690	1,690	2 526
Total cost of service	$000	28 880	30 319	31 555	32 153	32 840	33 861	35 976	35 719	36 946	38 042	40 129
Total sales of district heat	Tcal	2 093 6	2 208 0	2 289 2	2 292 1	2 297 8	2 308 0	2 319 9	2 338 2	2 360 1	2 388 3	2 421 8
Partial tariff production costs	$/Gcal	13 79	13 73	13 78	14 03	14 29	14 67	14 89	14 67	14 94	15 22	15 53
Partial tariff carrying charges	$/Gcal	0.00	0.00	0.00	0.00	0.00	0 00	0 61	0 61	0.72	0.71	1.04
Partial tariff all costs	$/Gcal	13 79	13 73	13 78	14 03	14 29	14 67	15 51	15 28	15 65	15 93	16 57
Process Steam Account												
Total production costs	$000	6 208	6 896	8 273	8 541	8 851	9 144	9 411	9 518	9 794	10 144	10 534
Total carrying charges	$000	0	0	0	0	0	0	0	0	0	0	0
Total cost of service	$000	6 208	6 896	8 273	8 541	8 851	9 144	9 411	9 518	9 794	10 144	10 534
Total sales of process steam	Tcal	400 0	450 0	550 0	550 0	550 0	550 0	550 0	550 0	550 0	550 0	550 0
Partial tariff production costs	$/Gcal	15 52	15 33	15 04	15 53	16 09	16 62	17 11	17 31	17 81	18 44	19 15
Partial tariff carrying charges	$/Gcal	0.00	0.00	0.00	0.00	0.00	0.00	0.00	0.00	0.00	0.00	0.00
Partial tariff all costs	$/Gcal	15 52	15 33	15 04	15 53	16 09	16 62	17 11	17 31	17 81	18 44	19 15

Input Data and Assumptions

Case Number			1 a	DH Sensitivity
Thermal Energy Supply Source	0	TES 1 + HOBs		
Rehabilitate TES 1?	0	No		
Electric Energy Supply Source	0	TES 1 + Grid Electric		
Supplemental Electric Capacity	1	New GTCC		
District Heating Scenario	0	Scenario No Project	= No modernization no expansion only rehabilitation	
Local DH supply by Bishkek DH?	0	No		
When?	199	and beyond		

Study Year			1	2	3	4	5	6	7	8	9	10	11
Calendar Year			1995	1996	1997	1998	1999	2000	2001	2002	2003	2004	2005
Thermal Energy													
District Heating													
Maximum Demand													
Existing customers	generation basis	Gcal/hr	900 0	935 0	950 0	924 0	897 0	870 0	850 0	826 0	802 0	778 0	754 0
New customers	generation basis	Gcal/hr	46.0	53.0	61.0	71.0	81.0	94.0	108.0	124.0	142.0	163 0	188.0
Total	generation basis	Gcal/hr	946 0	988 0	1 011 0	995 0	978 0	964 0	958 0	950 0	944 0	941 0	942 0
Disposition of energy													
Existing customers	sales basis	Tcal	2 000 0	2 100 0	2 165 0	2 149 0	2 134 0	2 119 0	2 103 0	2 088 0	2 073 0	2 058 0	2 042 0
New customers	generation basis	Tcal	104 0	120 0	138 0	159 0	182 0	210 0	241 0	278 0	319 0	367 0	422 0
Contingency Requirements (LU or 15 /)													
Bishkek DH System	15 0%	Gcal/hr	135 0	140 3	142 5	138 6	134 6	130 5	127 5	155 0	155 0	155 0	155 0
Local DH System	15 0 /	Gcal/hr	50 0	50 0	50 0	50 0	50 0	50 0	50 0	50 0	50 0	50 0	28 2
District heating pipe losses													
Bishkek DH system		%	25 01 %	25 00%	24 51 /	24 75%	24 99%	25 20%	25 45 /	25 67 /	25 91%	26 13 /	26 41 /
Local DH system		/	10 00 /	10 00%	10 00%	10 00%	10 00 /	10 00%	10 00 /	10 00%	10 00 /	10 00%	10 00 /
DH pumping at booster stations		kWh/Gcal	7 70	7 70	7 70	7 70	7 70	7 70	7 70	7 70	7 70	7 70	7 70
CHP plant piping efficiency		/	96 0%										
Process Steam													
Energy	generation basis	Tcal	571 4	642 9	785 7	785 7	785 7	785 7	785 7	785 7	785 7	785 7	785 7
Piping losses		/	30 00 /	30 00%	30 00 /	30 00 /	30 00 /	30 00 /	30 00 /	30 00 /	30 00°	30 00 /	30 00 /
Ratio of annual maximum demand to annual average demand			2 0										
Heat exchange efficiency steam --> hot water		Gcal/hr/Gcal/hr	1 0										
Electric Energy			1995	1996	1997	1998	1999	2000	2001	2002	2003	2004	2005
Maximum Demand local customers	generation basis	MW	425 0	434 2	443 6	453 3	463 1	473 2	483 4	493 9	504 6	515 6	526 8
annual growth		/		2 2 /	2 2 /	2 2 /	2 2 /	2 2 /	2 2 /	2 2 /	2 2 /	2 2 /	2 2 /
Disposition of energy local customers	sales basis	GWh	1 002 0	1 052 0	1 094 0	1 127 0	1 161 0	1 196 0	1 232 0	1 269 0	1 307 0	1 346 0	1 386 0
annual growth		%		5 0%	4 0 /	3 0 /	3 0%	3 0%	3 0 /	3 0 /	3 0 /	3 0 /	3 0 /
T&D losses		/	12 0%	12 0 /	12 0%	11 0 /	11 0%	11 0%	11 0 %	11 0 /	10 0%	10 0%	10 0%
Contingency requirement (LU or 15 / max)	15 0%	MW	80 0	81 6	83 4	85 1	86 9	88 8	90 7	92 6	94 6	96 6	98 7
Grid capability		MW	200 0	200 0	200 0	200 0	200 0	200 0	200 0	200 0	200 0	200 0	200 0
	esc after 2005												
Grid electricity price forecast	0 0%	$/kWh	0 0300	0 0300	0 0300	0 0300	0 0300	0 0300	0 0300	0 0300	0 0300	0 0300	0 0300
GTCC unit addition block size		MW	75 0										
GTCC capability		MW	0 0	0 0	0 0	0 0	0 0	0 0	0 0	0 0	0 0	0 0	0 0
GTCC fuel cost		$/kWh	0 0189	0 0189	0 0189	0 0189	0 0189	0 0189	0 0189	0 0189	0 0189	0 0189	0 0189
GTCC annual average heat rate		kcal/kWh	2 008 1										
Maximum Demand transfers	generation basis	MW	100 0	102 2	104 4	106 7	109 0	111 3	113 7	116 2	118 7	121 3	123 9
annual growth		/		2 2 /	2 2 /	2 2 /	2 2 /	2 2 /	2 2	2 2 %	2 2 /	2 2 /	2 2 /
Disposition of energy transfers	sales basis	GWh	350 0	357 6	365 4	373 3	381 4	389 7	398 1	406 8	415 6	424 6	433 8
annual growth		/		2 2 /	2 2 /	2 2 /	2 2 /	2 2 /	2 2 /	2 2 /	2 2 /	2 2 /	2 2 /
Fuel Price Forecast	esc after 2005												
Coal	0 0%	$/Gcal	8 80	8 80	8 80	8 80	8 80	8 80	8 80	8 80	8 80	8 80	8 80
Mazut	0 0 /	$/Gcal	10 00	10 00	10 00	10 00	10 00	10 00	10 00	10 00	10 00	10 00	10 00
Natural Gas	0 0 /	$/Gcal	9 40	9 40	9 40	9 40	9 40	9 40	9 40	9 40	9 40	9 40	9 40

Fuel Mix for Su[illegible]esources		1995	1996	199[illegible]	1998	1999	2000	2001	2002	2003	[illegible]	2005
TES 1 CHP boilers												
Coal	%	75 0%	97 0%	97 0%	97 0%	97 0%	97 0%	97 0%	97 0%	97 0%	97 0%	97 0%
Mazut	%	5 0%	2 0%	2 0%	2 0%	2 0%	2 0%	2 0%	2 0%	2 0%	2 0%	2 0%
Natural Gas	%	20 0%	1 0%	1 0%	1 0%	1 0%	1 0%	1 0%	1 0%	1 0%	1 0%	1 0%
Weighted average fuel price	$/Gcal	8 98	8 83	8 83	8 83	8 83	8 83	8 83	8 83	8 83	8 83	8 83
Bishkek HOBs												
Coal	%	0 0%	0 0%	0 0%	0 0%	0 0%	0 0%	0 0%	0 0%	0 0%	0 0%	0 0%
Mazut	%	0 0%	0 0%	0 0%	0 0%	0 0%	0 0%	0 0%	0 0%	0 0%	0 0%	0 0%
Natural Gas	%	100 0%	100 0%	100 0%	100 0%	100 0%	100 0%	100 0%	100 0%	100 0%	100 0%	100 0%
Weighted average fuel price	$/Gcal	9 40	9 40	9 40	9 40	9 40	9 40	9 40	9 40	9 40	9 40	9 40
Local DH Boilers												
Coal	%	0 0%	0 0%	0 0%	0 0%	0 0%	0 0%	0 0%	0 0%	0 0%	0 0%	0 0%
Mazut	%	0 0%	0 0%	0 0%	0 0%	0 0%	0 0%	0 0%	0 0%	0 0%	0 0%	0 0%
Natural Gas	%	100 0%	100 0%	100 0%	100 0%	100 0%	100 0%	100 0%	100 0%	100 0%	100 0%	100 0%
Weighted average fuel price	$/Gcal	9 40	9 40	9 40	9 40	9 40	9 40	9 40	9 40	9 40	9 40	9 40

Boiler efficiencies		1995	1996	1997	1998	1999	2000	2001	2002	2003	2004	2005
Bishkek CHP boilers (TES 1)		87 5%	87 3%	87 1%	86 9%	86 7%	86 5%	86 3%	86 1%	85 9%	85 7%	85 5%
Bishkek HOBs (TES 1 and TES 2)	%	89 0%	89 0%	89 0%	89 0%	89 0%	89 0%	89 0%	89 0%	89 0%	89 0%	89 0%
Local HOBs (Frunze JAL)												
Coal	%	0 0%	0 0%	0 0%	0 0%	0 0%	0 0%	0 0%	0 0%	0 0%	0 0%	0 0%
Mazut	%	89 0%	89 0%	89 0%	89 0%	89 0%	89 0%	89 0%	89 0%	89 0%	89 0%	89 0%
Natural gas	%	83 0%	83 0%	83 0%	83 0%	83 0%	83 0%	83 0%	83 0%	83 0%	83 0%	83 0%
Weighted average	%	*83 0%*	*83 0%*	*83 0%*	*83 0%*	*83 0%*	*83 0%*	*83 0%*	*83 0%*	*83 0%*	*83 0%*	*83 0%*
Process steam generation	Gcal/hr add l heat input per Gcal/hr steam	0 63	0 63	0 63	0 63	0 63	0 64	0 64	0 64	0 64	0 64	0 64

Performance Degradation		
Annual change in boiler efficiency	%	0 20%
Annual change in electric capability	%	0 10%

Fuel Allocation for Cogeneration Energy		
Methodology #A CHP advantage devoted to DH energy		
Electric power only production efficiency	%	30 0%
Methodology #B CHP advantage devoted to electric energy		
Distric heat only production efficiency	%	87 0%
Allocation Factors for TES 1 CHP Plant O&M and Investment		
% allocated to electric production	%	75 0%
% allocated to district heating production	%	12 5%
% allocated to process steam production	%	12 5%

Economic and Financial Parameters			
Capital cost real escalation rates		1995 2000	2001 2014
Western	%	0 00%	0 00%
Russian	%	0 00%	0 00%
Kyrgyz labor	%	16 90%	6 60%
Kyrgyz material	%	1 70%	0 90%
Kyrgyz equipment	%	1 50%	3 20%
Discount Rate for NPV Calculation	%	12 00%	
Physical contingencies + technical assistance & training	% of direct costs	12 50%	

Composite escalation factors											
Western	1 000	1 000	1 000	1 000	1 000	1 000	1 000	1 000	1 000	1 000	1 000
Russian	1 000	1 000	1 000	1 000	1 000	1 000	1 000	1 000	1 000	1 000	1 000
Kyrgyz labor	1 000	1 169	1 367	1 598	1 867	2 183	2 327	2 481	2 645	2 819	3 005
Kyrgyz material	1 000	1 017	1 034	1 052	1 070	1 088	1 098	1 108	1 118	1 128	1 138
Kyrgyz equipment	1 000	1 015	1 030	1 046	1 061	1 077	1 112	1 147	1 184	1 222	1 261

Load Forecast

Case Number 1 a DH Sensitivity

Load Forecast Development

Study Year		1	2	3	4	5	6	7	8	9	10	11
Calendar Year		1995	1996	1997	1998	1999	2000	2001	2002	2003	2004	2005
District heating pipe losses												
Bishkek DH system	%	25 01%	25 00%	24 51%	24 75%	24 99%	25 20%	25 45%	25 67%	25 91%	26 13%	26 41%
Local DH system	%	10 00%	10 00%	10 00%	10 00%	10 00%	10 00%	10 00%	10 00%	10 00%	10 00%	10 00%
T&D losses (in Bishkek)	%	12 0%	12 0%	12 0%	11 0%	11 0%	11 0%	11 0%	11 0%	10 0%	10 0%	10 0%
Thermal Energy												
Bishkek DH System Hot Water												
Maximum Demand (generation basis)												
Existing customers	Gcal/hr	900 0	935 0	950 0	924 0	897 0	870 0	850 0	826 0	802 0	778 0	754 0
New customers	Gcal/hr	0.0	0.0	0.0	0 0	0.0	0.0	0.0	0.0	0.0	0.0	0.0
Total Maximum Demand	*Gcal/hr*	*900 0*	*935 0*	*950 0*	*924 0*	*89 0*	*8 0 0*	*850 0*	*826 0*	*802 0*	*778 0*	*754 0*
Disposition of Energy												
Existing customers	Tcal	2 000 0	2 100 0	2 165 0	2 149 0	2 134 0	2 119 0	2 103 0	2 088 0	2 073 0	2 058 0	2 042 0
New customers	Tcal	0.0	0.0	0.0	0.0	0.0	0.0	0.0	0.0	0.0	0.0	0.0
Total (sales basis)	Tcal	2 000 0	2 100 0	2 165 0	2 149 0	2 134 0	2 119 0	2 103 0	2 088 0	2 073 0	2 058 0	2 042 0
Distribution losses												
Existing customers	Tcal	667 0	700 0	702 9	706 8	711 0	713 9	717 9	721 1	724 9	728 0	732 8
New customers	Tcal	0.0	0.0	0.0	0.0	0.0	0.0	0.0	0.0	0.0	0.0	0.0
Total Disposition of Energy	*Tcal*	*2 667 0*	*2 800 0*	*2 867 9*	*2 855 8*	*2 845 0*	*2 832 9*	*2 820 9*	*2 809 1*	*2 79 9*	*2 786 0*	*2 7 48*
Bishkek DH System Process Steam												
Energy generation basis	Tcal	571 4	642 9	785 7	785 7	785 7	785 7	785 7	785 7	785 7	785 7	785 7
Energy sales basis	Tcal	400 0	450 0	550 0	550 0	550 0	550 0	550 0	550 0	550 0	550 0	550 0
Local DH System Hot Water												
Maximum Demand (generation basis)	Gcal/hr	46 0	53 0	61 0	71 0	81 0	94 0	108 0	124 0	142 0	163 0	188 0
Disposition of Energy												
Existing customers	Tcal	93 6	108 0	124 2	143 1	163 8	189 0	216 9	250 2	287 1	330 3	379 8
Distribution losses	Tcal	10.4	12.0	13.8	15.9	18.2	21 0	24.1	27.8	31.9	36.7	42.2
Total Disposition of Energy	*Tcal*	104 0	120 0	138 0	159 0	182 0	210 0	241 0	278 0	319 0	367 0	422 0
Electric Energy												
Maximum Demand (generation basis)												
Local customers	MW	425 0	434 2	443 6	453 3	463 1	473 2	483 4	493 9	504 6	515 6	526 8
Transfers	MW	100 0	102 2	104 4	106 7	109 0	111 3	113 7	116 2	118 7	121 3	123 9
DH pumping power	MW	7 3	7.6	7.8	7 7	7.5	7.4	7 4	7.3	7 3	7.2	7.3
Total Maximum Demand	*MW*	*532 3*	*544 0*	*555 8*	*567 6*	*5 9 6*	*591 9*	*604 5*	*61 4*	*630 6*	*644 1*	*658 0*
Disposition of Energy												
Local customers (sales basis)	GWh	1 002 0	1 052 0	1 094 0	1 127 0	1 161 0	1 196 0	1 232 0	1 269 0	1 307 0	1 346 0	1 386 0
Transfers	GWh	350 0	357 6	365 4	373 3	381 4	389 7	398 1	406 8	415 6	424 6	433 8
DH pumping power	GWh	21.3	22.5	23.1	23.2	23.3	23.4	23.6	23.8	24.0	24 3	24 6
Total consumption	GWh	1 373 3	1 432 1	1 482 5	1 523 5	1 565 7	1 609 1	1 653 7	1 699 5	1 746 6	1 794 9	1 844 4
T&D losses	GWh	187.3	195.3	202.2	188.3	193.5	198.9	204.4	210.1	194 1	199.4	204.9
Total Disposition of Energy	*GWh*	*1 560 6*	*1 62 4*	*1 684*	*1 711 8*	*1 59 2*	*1 808 0*	*1 858 1*	*1 909 6*	*1 940 6*	*1 994 3*	*2 049 4*

Summary o[illegible] Forecasts (generation basis)

Calendar Year		1995	1996	1997	1998	1999	2000	2001	2002	2003	2004	2005
Thermal Load to be Served by Bishkek DH System												
Maximum Demand Hot Water	Gcal/hr	900 0	935 0	950 0	924 0	897 0	870 0	850 0	826 0	802 0	778 0	754 0
Thermal Energy Hot Water	Tcal	2 667 0	2 800 0	2 867 9	2 855 8	2 845 0	2 832 9	2 820 9	2 809 1	2 797 9	2 786 0	2 774 8
Maximum Demand Process Steam	Gcal/hr	130 5	146 8	179 4	179 4	179 4	179 4	179 4	179 4	179 4	179 4	179 4
Thermal Energy Process Steam	Tcal	571 4	642 9	785 7	785 7	785 7	785 7	785 7	785 7	785 7	785 7	785 7
Thermal Load to be Served by Local DH System												
Maximum Demand Hot Water	Gcal/hr	46 0	53 0	61 0	71 0	81 0	94 0	108 0	124 0	142 0	163 0	188 0
Thermal Energy Hot Water	Tcal	104 0	120 0	138 0	159 0	182 0	210 0	241 0	278 0	319 0	367 0	422 0
Maximum Demand Process Steam	Gcal/hr	0 0	0 0	0 0	0 0	0 0	0 0	0 0	0 0	0 0	0 0	0 0
Thermal Energy Process Steam	Tcal	0 0	0 0	0 0	0 0	0 0	0 0	0 0	0 0	0 0	0 0	0 0
Total Thermal Load to be Served												
Maximum Demand Hot Water	Gcal/hr	946 0	988 0	1 011 0	995 0	978 0	964 0	958 0	950 0	944 0	941 0	942 0
Thermal Energy Hot Water	Tcal	2 771 0	2 920 0	3 005 9	3 014 8	3 027 0	3 042 9	3 061 9	3 087 1	3 116 9	3 153 0	3 196 8
Maximum Demand Process Steam	Gcal/hr	130 5	146 8	179 4	179 4	179 4	179 4	179 4	179 4	179 4	179 4	179 4
Thermal Energy Process Steam	Tcal	571 4	642 9	785 7	785 7	785 7	785 7	785 7	785 7	785 7	785 7	785 7
Total Electric Load Forecast												
Maximum Demand	MW	532 3	544 0	555 8	567 6	579 6	591 9	604 5	617 4	630 6	644 1	658 0
Electric Energy	GWh	1,560 6	1,627 4	1,684 7	1,711 8	1,759 2	1,808 0	1,858 1	1,909 6	1,940 6	1,994 3	2,049 4

Load/Capacity Balance

Case No 1 a DH Sensitivity add TG11 in 2002

Study Year		1	2	3	4	5	6	7	8	9	10	11
Calendar Year		1995	1996	1997	1998	1999	2000	2001	2002	2003	2004	2005
Electric Energy												
Maximum Demand	MW	532 3	544 0	555 8	567 6	579 6	591 9	604 5	617 4	630 6	644 1	658 0
Existing capacity resources												
TES 1 CHP Plant	MW	550 5	549 9	549 4	548 9	548 3	506 1	505 6	505 1	588 2	587 6	587 0
Grid electric capacity	MW	200 0	200 0	200 0	200 0	200 0	200 0	200 0	200 0	200 0	200 0	200 0
GTCC	MW	0.0	0.0	0.0	0.0	0.0	0.0	0.0	0.0	0.0	0.0	0.0
Total capacity resources before additions	MW	750 5	749 9	749 4	748 9	748 3	706 1	705 6	705 1	788 2	787 6	787 0
% reserve before capacity additions	/	41 0%	37 9%	34 8%	31 9%	29 1/	19 3/	16 7/	14 2/	25 0/	22 3/	19 6/
Capacity resources required	MW	612 3	625 6	639 2	652 7	666 5	680 7	695 2	710 1	725 2	740 8	756 7
Additional capacity required (minimum)	MW	0 0	0 0	0 0	0 0	0 0	0 0	0 0	5 0	0 0	0 0	0 0
Capacity additions/retirements												
TES 1 CHP Rehabilitation (install TG11 or equiv)	MW	0 0	0 0	0 0	0 0	0 0	0 0	0 0	83 7	0 0	0 0	0 0
TES 1 CHP Retirement of Unit 1 and 2	MW	0 0	0 0	0 0	0 0	(41 7)	0 0	0 0	0 0	0 0	0 0	0 0
Grid electric capacity additions	MW	0 0	0 0	0 0	0 0	0 0	0 0	0 0	0 0	0 0	0 0	0 0
GTCC capacity additions	MW	0 0	0 0	0 0	0 0	0 0	0 0	0 0	0 0	0 0	0 0	0 0
Total capacity resources after additions	MW	750 5	749 9	749 4	748 9	748 3	706 1	705 6	788 8	788 2	787 6	787 0
/ reserve after capacity additions	/	41 0%	37 9%	34 8/	31 9%	29 1/	19 3/	16 7/	27 8/	25 0%	22 3%	19 6%
Thermal Energy - Hot Water												
Bishkek DH System												
Maximum Demand	Gcal/hr	900 0	935 0	950 0	924 0	897 0	870 0	850 0	826 0	802 0	778 0	754 0
Existing capacity resources												
TES 1 CHP Plant												
nominal HW capacity	Gcal/hr	740 0	740 0	740 0	740 0	740 0	656 4	656 4	811 4	811 4	811 4	811 4
peaking HW capacity	Gcal/hr	281.3	265.0	232.4	232.4	232.4	229.0	229.0	229.0	229.0	229.0	229.0
total	Gcal/hr	1 021 3	1 005 0	972 4	972 4	972 4	885 4	885 4	1 040 4	1 040 4	1 040 4	1 040 4
TES 1HOBs	Gcal/hr	300 0	300 0	300 0	300 0	300 0	300 0	300 0	300 0	300 0	300 0	300 0
TES 2 HOBs	Gcal/hr	192 0	192 0	192 0	192 0	192 0	192 0	192 0	192 0	192 0	192 0	192 0
Existing HOBs Frunze	Gcal/hr	0 0	0 0	0 0	0 0	0 0	0 0	0 0	0 0	0 0	0 0	0 0
Existing HOBs JAL	Gcal/hr	0 0	0 0	0 0	0 0	0 0	0 0	0 0	0 0	0 0	0 0	0 0
New HOBs in local DH system	Gcal/hr	0.0	0.0	0.0	0.0	0.0	0.0	0.0	0.0	0.0	0.0	0.0
Total capacity resources before additions	Gcal/hr	1 513 3	1 497 0	1 464 4	1 464 4	1 464 4	1 377 4	1 377 4	1 532 4	1 532 4	1 532 4	1 532 4
/ reserve before capacity additions	/	68 1/	60 1/	54 1/	58 5/	63 3/	58 3/	62 0/	85 5%	91 1%	97 0/	103 2/
Capacity resources required	Gcal/hr	1 035 0	1 075 3	1 092 5	1 062 6	1 031 6	1 000 5	977 5	981 0	957 0	933 0	909 0
Additional capacity required (minimum)	Gcal/hr	0 0	0 0	0 0	0 0	0 0	0 0	0 0	0 0	0 0	0 0	0 0
Capacity additions/retirements												
New HOB capacity	Gcal/hr	0 0	0 0	0 0	0 0	0 0	0 0	0 0	0 0	0 0	0 0	0 0
Total capacity resources after additions	Gcal/hr	1 513 3	1 497 0	1 464 4	1 464 4	1 464 4	1 377 4	1 377 4	1 532 4	1 532 4	1 532 4	1 532 4
/ reserve after capacity additions	/	68 1%	60 1%	54 1%	58 5/	63 3/	58 3/	62 0/	85 5/	91 1/	97 0%	103 2/
Local DH System												
Maximum Demand	Gcal/hr	46 0	53 0	61 0	71 0	81 0	94 0	108 0	124 0	142 0	163 0	188 0
Existing capacity resources												
Existing HOBs Frunze	Gcal/hr	150 0	150 0	150 0	150 0	150 0	150 0	150 0	150 0	150 0	150 0	0 0
Existing HOBs JAL	Gcal/hr	40 0	40 0	40 0	40 0	40 0	40 0	40 0	40 0	40 0	40 0	40 0
New HOBs capacity additions	Gcal/hr	0.0	0 0	0.0	0 0	0.0	0.0	0.0	0.0	0.0	50.0	50 0
Total capacity resources before additions	Gcal/hr	190 0	190 0	190 0	190 0	190 0	190 0	190 0	190 0	190 0	240 0	90 0
/ reserve before capacity additions	/	313 0/	258 5/	211 5/	167 6%	134 6%	102 1%	75 9%	53 2/	33 8/	47 2%	52 1%
Capacity resources required	Gcal/hr	96 0	103 0	111 0	121 0	131 0	144 0	158 0	174 0	192 0	213 0	216 2
Additional capacity required (minimum)	Gcal/hr	0 0	0 0	0 0	0 0	0 0	0 0	0 0	0 0	2 0	0 0	126 2
Capacity additions/retirements												
New HOB capacity	Gcal/hr	0 0	0 0	0 0	0 0	0 0	0 0	0 0	0 0	50 0	0 0	150 0
Frunze boiler retirements	Gcal/hr	0.0	0.0	0.0	0.0	0 0	0.0	0.0	0 0	0.0	(150.0)	0.0
Total capacity resources after additions	Gcal/hr	190 0	190 0	190 0	190 0	190 0	190 0	190 0	190 0	240 0	240 0	240 0
/ reserve after capacity additions	/	313 0/	258 5/	211 5/	167 6/	134 6/	102 1/	75 9/	53 2/	69 0%	47 2/	27 7/
Thermal Energy Process Steam												
Maximum Demand	Gcal/hr	130 5	146 8	179 4	179 4	179 4	179 4	179 4	179 4	179 4	179 4	179 4
Existing capacity resources (TES 1 CHP)	Gcal/hr	411 8	411 8	411 8	411 8	411 8	408 4	408 4	408 4	408 4	408 4	408 4
% reserve	/	215 6%	180 6/	129 6/	129 6/	129 6/	127 7/	127 7%	127 7/	127 7/	127 7/	127 7/

447

Energy Production/Fuel Consumption Summary

Case Number 1 a DH Sensitivity

Study Year		1	2	3	4	5	6	7	8	9	10	11
Calendar Year		1995	1996	1997	1998	1999	2000	2001	2002	2003	2004	2005
Energy Production												
Electric Energy Generation												
Bishkek CHP Plant (TES 1)	GWh	1 560 4	1 626 7	1 682 9	1 708 9	1 754 6	1 787 2	1 831 2	1 906 3	1 935 6	1 986 8	2 038 2
Grid electric	GWh	0 2	0 7	1 7	2 9	4 6	20 7	26 8	3 1	4 8	7 2	10 8
GTCC	GWh	0.0	0.0	0.0	0.0	0.0	0.0	0.0	0.0	0.0	0.0	0.0
Total	GWh	1 560 6	1 627 4	1 684 7	1 711 8	1 759 2	1 807 9	1 858 0	1 909 4	1 940 4	1 994 0	2 049 0
Thermal Energy Generation												
Distric heating (heat, hot water)												
Bishkek CHP Plant (TES 1)	Tcal	2 483 2	2 586 9	2 648 5	2 653 6	2 665 9	2 654 7	2 657 3	2 758 8	2 761 5	2 754 4	2 745 4
Bishkek HOBs (TES 1 and TES 2)	Tcal	183 9	213 1	219 5	202 2	179 1	178 2	163 6	50 2	36 5	31 6	29 5
Local DH System HOBs	Tcal	104.0	120.0	138.0	159.0	182.0	210.0	241.0	278.0	319.0	367.0	422.0
Total	Tcal	2 771 0	2 920 0	3 005 9	3 014 8	3 027 0	3 042 9	3 061 9	3 087 1	3 116 9	3 153 0	3 196 8
Process steam												
Bishkek DH system (TES 1)	Tcal	571 4	642 9	785 7	785 7	785 7	785 7	785 7	785 7	785 7	785 7	785 7
Fuel Consumption												
Bishkek DH System												
Coal	Tcal	4 907 4	6 654 5	6 953 9	7 048 0	7 200 9	7 373 5	7 511 0	7 621 2	7 760 7	7 918 2	8 077 1
Mazut	Tcal	327 2	137 2	143 4	145 3	148 5	152 0	154 9	157 1	160 0	163 3	166 5
Natural gas	Tcal	1,515.2	308.1	318.3	299.8	275.5	276 2	261.2	135.0	121.0	117.1	116.4
Total	Tcal	6 749 7	7 099 8	7 415 6	7 493 2	7 624 9	7 801 7	7 927 1	7 913 3	8 041 7	8 198 6	8 360 0
Local DH System												
Coal	Tcal	0 0	0 0	0 0	0 0	0 0	0 0	0 0	0 0	0 0	0 0	0 0
Mazut	Tcal	0 0	0 0	0 0	0 0	0 0	0 0	0 0	0 0	0 0	0 0	0 0
Natural gas	Tcal	125.3	144.6	166.3	191.6	219.3	253.0	290.4	334.9	384.3	442.2	508.4
Total	Tcal	125 3	144 6	166 3	191 6	219 3	253 0	290 4	334 9	384 3	442 2	508 4
GTCC natural gas	Tcal	0 0	0 0	0 0	0 0	0 0	0 0	0 0	0 0	0 0	0 0	0 0
Total Fuel Consumption	Tcal	6 875 0	7 244 4	7 581 9	7 684 8	7 844 1	8 054 7	8 217 5	8 248 3	8 426 1	8 640 8	8 868 5
/ by type												
Coal	%	71 4%	91 9%	91 7%	91 7%	91 8%	91 5%	91 4%	92 4%	92 1%	91 6%	91 1%
Mazut	%	4 8%	1 9%	1 9%	1 9%	1 9%	1 9%	1 9%	1 9%	1 9%	1 9%	1 9%
Natural gas	%	23.9%	6.2%	6.4%	6.4%	6.3%	6.6%	6.7%	5.7%	6.0%	6.5%	7.0%
Total	%	100 0%	100 0%	100 0%	100 0%	100 0%	100 0%	100 0%	100 0%	100 0%	100 0%	100 0%

448

Generating Resource Characteristics

Case Number 1 a DH Sensitivity

Study Year			1	2	3	4	5	6	7	8	9	10	11
Calendar Year			1995	1996	1997	1998	1999	2000	2001	2002	2003	2004	2005
TES 1 CHP Plant			1995	1996	1997	1998	1999	2000	2001	2002	2003	2004	2005
Electric Capability													
Unit #1		MW	35 0	35 0	35 0	35 0	35 0	0 0	0 0	0 0	0 0	0 0	0 0
Unit #2		MW	25 0	25 0	25 0	25 0	25 0	0 0	0 0	0 0	0 0	0 0	0 0
Unit #3		MW	50 0	50 0	50 0	50 0	50 0	50 0	50 0	50 0	50 0	50 0	50 0
Unit #4		MW	35 0	35 0	35 0	35 0	35 0	35 0	35 0	35 0	35 0	35 0	35 0
Unit #5		MW	35 0	35 0	35 0	35 0	35 0	35 0	35 0	35 0	35 0	35 0	35 0
Unit #6		MW	86 0	86 0	86 0	86 0	86 0	86 0	86 0	86 0	86 0	86 0	86 0
Unit #7		MW	60 0	60 0	60 0	60 0	60 0	60 0	60 0	60 0	60 0	60 0	60 0
Unit #8		MW	60 0	60 0	60 0	60 0	60 0	60 0	60 0	60 0	60 0	60 0	60 0
Unit #9		MW	86 0	86 0	86 0	86 0	86 0	86 0	86 0	86 0	86 0	86 0	86 0
Unit #10		MW	86 0	86 0	86 0	86 0	86 0	86 0	86 0	86 0	86 0	86 0	86 0
Unit #11	1	MW	0.0	0.0	0.0	0.0	0.0	0.0	0.0	90.0	90.0	90.0	90.0
Total		MW	558 0	558 0	558 0	558 0	558 0	498 0	498 0	588 0	588 0	588 0	588 0
Largest Unit		MW	86 0	86 0	86 0	86 0	86 0	86 0	86 0	90 0	90 0	90 0	90 0
		MW net	80 0	80 0	80 0	80 0	80 0	80 0	80 0	83 7	83 7	83 7	83 7
DH Capability Hot Water													
Unit #1		Gcal/hr	35 0	35 0	35 0	35 0	35 0	0 0	0 0	0 0	0 0	0 0	0 0
Unit #2		Gcal/hr	48 6	48 6	48 6	48 6	48 6	0 0	0 0	0 0	0 0	0 0	0 0
Unit #3		Gcal/hr	51 0	51 0	51 0	51 0	51 0	51 0	51 0	51 0	51 0	51 0	51 0
Unit #4		Gcal/hr	97 0	97 0	97 0	97 0	97 0	97 0	97 0	97 0	97 0	97 0	97 0
Unit #5		Gcal/hr	97 0	97 0	97 0	97 0	97 0	97 0	97 0	97 0	97 0	97 0	97 0
Unit #6		Gcal/hr	102 6	102 6	102 6	102 6	102 6	102 6	102 6	102 6	102 6	102 6	102 6
Unit #7		Gcal/hr	61 0	61 0	61 0	61 0	61 0	61 0	61 0	61 0	61 0	61 0	61 0
Unit #8		Gcal/hr	61 0	61 0	61 0	61 0	61 0	61 0	61 0	61 0	61 0	61 0	61 0
Unit #9		Gcal/hr	102 6	102 6	102 6	102 6	102 6	102 6	102 6	102 6	102 6	102 6	102 6
Unit #10		Gcal/hr	103 0	103 0	103 0	103 0	103 0	103 0	103 0	103 0	103 0	103 0	103 0
Unit #11		Gcal/hr	0.0	0.0	0.0	0.0	0.0	0.0	0.0	155.0	155.0	155.0	155.0
Total		Gcal/hr	758 8	758 8	758 8	758 8	758 8	675 2	675 2	830 2	830 2	830 2	830 2
Largest Unit		Gcal/hr	103 0	103 0	103 0	103 0	103 0	103 0	103 0	155 0	155 0	155 0	155 0
Boiler Efficiencies			1999	2003									
w/o Rehabilitation		%	87 5%										
w/Rehabilitation		%	89 5%										
Boiler #14		%	87 5%	87 3%	87 1%	86 9%	86 7%	86 5%	86 3%	86 1%	85 9%	85 7%	85 5%
Boiler #15		%	87 5%	87 3%	87 1%	86 9%	86 7%	86 5%	86 3%	86 1%	85 9%	85 7%	85 5%
Boiler #16		%	87 5%	87 3%	87 1%	86 9%	86 7%	86 5%	86 3%	86 1%	85 9%	85 7%	85 5%
Boiler #17		%	87 5%	87 3%	87 1%	86 9%	86 7%	86 5%	86 3%	86 1%	85 9%	85 7%	85 5%
Boiler #18		%	87 5%	87 3%	87 1%	86 9%	86 7%	86 5%	86 3%	86 1%	85 9%	85 7%	85 5%
Boiler #19		%	87 5%	87 3%	87 1%	86 9%	86 7%	86 5%	86 3%	86 1%	85 9%	85 7%	85 5%
Boiler #20		%	87 5%	87 3%	87 1%	86 9%	86 7%	86 5%	86 3%	86 1%	85 9%	85 7%	85 5%
Boiler #21		%	87 5%	87 3%	87 1%	86 9%	86 7%	86 5%	86 3%	86 1%	85 9%	85 7%	85 5%
Boiler #22		%	87 5%	87 3%	87 1%	86 9%	86 7%	86 5%	86 3%	86 1%	85 9%	85 7%	85 5%
Boiler #23		%	87 5%	87 3%	87 1%	86 9%	86 7%	86 5%	86 3%	86 1%	85 9%	85 7%	85 5%
Boiler #24		%	87.5%	87 3%	87.1%	86.9%	86.7%	86 5%	86 3%	86.1%	85 9%	85 7%	85 5%
Weighted average		%	87 5%	87 3%	87 1%	86 9%	86 7%	86 5%	86 3%	86 1%	85 9%	85 7%	85 5%

Calendar year		1995	1996	1997	1998	1999	2000	2001	2002	2003	2004	2005
TES 1 CHP Plant Electrical Rating w/o Rehabilitation												
@ Zero DH Load	MW gross	504 0	504 0	504 0	504 0	504 0	504 0	504 0	504 0	504 0	504 0	504 0
@ 35/ DH Load	MW gross	596 5	596 5	596 5	596 5	596 5	565 5	565 5	565 5	565 5	565 5	565 5
@ 75/ DH Load	MW gross	586 5	586 5	586 5	586 5	586 5	541 0	541 0	541 0	541 0	541 0	541 0
@ Full DH Load	MW gross	550 5	550 5	550 5	550 5	550 5	505 5	505 5	505 5	505 5	505 5	505 5
Change in TES 1 Electrical Rating w/ Rehabilitation												
@ Zero DH Load	MW gross	0 0	0 0	0 0	0 0	0 0	0 0	0 0	75 0	0 0	0 0	0 0
@ 35/ DH Load	MW gross	0 0	0 0	0 0	0 0	0 0	0 0	0 0	54 0	0 0	0 0	0 0
@ 75/ DH Load	MW gross	0 0	0 0	0 0	0 0	0 0	0 0	0 0	99 4	0 0	0 0	0 0
@ Full DH Load	MW gross	0 0	0 0	0 0	0 0	0 0	0 0	0 0	90 0	0 0	0 0	0 0
TES 1 CHP Plant Electrical Rating w/ Rehabilitation												
@ Zero DH Load	MW gross	504 0	504 0	504 0	504 0	504 0	504 0	504 0	579 0	579 0	579 0	579 0
@ 35/ DH Load	MW gross	596 5	596 5	596 5	596 5	596 5	565 5	565 5	619 5	619 5	619 5	619 5
@ 75/ DH Load	MW gross	586 5	586 5	586 5	586 5	586 5	541 0	541 0	640 4	640 4	640 4	640 4
@ Full DH Load	MW gross	550 5	550 5	550 5	550 5	550 5	505 5	505 5	595 5	595 5	595 5	595 5
Auxiliary power consumption	/	7 0%	7 0%	7 0%	7 0%	7 0%	7 0%	7 0%	7 0/	7 0%	7 0%	7 0%
@ Zero DH Load	MW net	468 7	468 7	468 7	468 7	468 7	468 7	468 7	468 7	468 7	468 7	468 7
@ 35/ DH Load	MW net	554 7	554 7	554 7	554 7	554 7	525 9	525 9	525 9	525 9	525 9	525 9
@ 75/ DH Load	MW net	545 4	545 4	545 4	545 4	545 4	503 1	503 1	503 1	503 1	503 1	503 1
@ Full DH Load	MW net	512 0	512 0	512 0	512 0	512 0	470 1	470 1	470 1	470 1	470 1	470 1
TES 1 CHP Plant DH/HW Rating												
@ Full DH Load (hot water only)	Gcal/hr	740 0	740 0	740 0	740 0	740 0	656 4	656 4	811 4	811 4	811 4	811 4
@ Full DH Load (total DH incl process steam)	Gcal/hr	1 151 8	1 151 8	1 151 8	1 151 8	1 151 8	1 064 8	1 064 8	1 219 8	1 219 8	1 219 8	1 219 8
TES-1 HOBs												
DH Capability Hot Water												
Unit #1	Gcal/hr	100 0	100 0	100 0	100 0	100 0	100 0	100 0	100 0	100 0	100 0	100 0
Unit #2	Gcal/hr	100 0	100 0	100 0	100 0	100 0	100 0	100 0	100 0	100 0	100 0	100 0
Unit #3	Gcal/hr	100.0	100.0	100.0	100.0	100.0	100.0	100.0	100.0	100.0	100.0	100.0
Total	Gcal/hr	300 0	300 0	300 0	300 0	300 0	300 0	300 0	300 0	300 0	300 0	300 0
Boiler Efficiencies												
Unit #1	/	87 0%	87 0%	87 0%	87 0%	87 0%	87 0/	87 0%	87 0/	87 0%	87 0%	87 0%
Unit #2	%	87 0%	87 0%	87 0%	87 0%	87 0%	87 0/	87 0%	87 0%	87 0/	87 0%	87 0%
Unit #3	%	87.0%	87.0%	87.0%	87.0%	87.0%	87.0%	87.0%	87 0%	87.0%	87.0%	87.0%
Weighted average	/	87 0%	87 0%	87 0%	87 0%	87 0%	87 0/	87 0%	87 0%	87 0%	87 0%	87 0/
TES-2 HOBs												
DH Capability Hot Water												
Unit #1	Gcal/hr	96 0	96 0	96 0	96 0	96 0	96 0	96 0	96 0	96 0	96 0	96 0
Unit #2	Gcal/hr	96.0	96.0	96.0	96 0	96.0	96.0	96.0	96.0	96.0	96.0	96.0
Total	Gcal/hr	192 0	192 0	192 0	192 0	192 0	192 0	192 0	192 0	192 0	192 0	192 0
Boiler Efficiencies												
Unit #1	/	87 0%	87 0%	87 0%	87 0%	87 0%	87 0%	87 0%	87 0%	87 0%	87 0%	87 0%
Unit #2	%	87.0%	87.0%	87.0%	87.0%	87.0%	87.0%	87.0%	87.0%	87.0%	87.0%	87.0%
Weighted average	/	87 0%	87 0%	87 0%	87 0%	87 0%	87 0%	87 0%	87 0%	87 0%	87 0%	87 0%
Local DH System												
Frunze Unit #1	Gcal/hr	50 0	50 0	50 0	50 0	50 0	50 0	50 0	50 0	50 0	50 0	0 0
Frunze Unit #2	Gcal/hr	50 0	50 0	50 0	50 0	50 0	50 0	50 0	50 0	50 0	50 0	0 0
Frunze Unit #3	Gcal/hr	50 0	50 0	50 0	50 0	50 0	50 0	50 0	50 0	50 0	50 0	0 0
JAL Unit #1	Gcal/hr	20 0	20 0	20 0	20 0	20 0	20 0	20 0	20 0	20 0	20 0	20 0
JAL Unit #2	Gcal/hr	20.0	20.0	20.0	20.0	20 0	20.0	20 0	20.0	20.0	20.0	20.0
Total	Gcal/hr	190 0	190 0	190 0	190 0	190 0	190 0	190 0	190 0	190 0	190 0	40 0
Largest Unit	Gcal/hr	50 0	50 0	50 0	50 0	50 0	50 0	50 0	50 0	50 0	50 0	20 0
New capacity additions												
Mazut fired	Gcal/hr	0 0	0 0	0 0	0 0	0 0	0 0	0 0	0 0	50 0	0 0	0 0
Gas fired	Gcal/hr	0 0	0 0	0 0	0 0	0 0	0 0	0 0	0 0	0 0	0 0	150 0

450

Investment Schedules

Case Number 1 a DH Sensitivity

Summary of Investments

Study Year		1	2	3	4	5	6	7	8	9	10	11
Calendar Year		1995	1996	1997	1998	1999	2000	2001	2002	2003	2004	2005
Capital Expenditure Schedules												
Investment in Electric and Thermal Energy Supply												
Bishkek DH System												
TES 1 CHP Plant Rehabilitation	$000	0 0	0 0	0 0	0 0	0 0	0 0	0 0	0 0	0 0	0 0	0 0
Installation of new additional HOBs	$000	0 0	0 0	0 0	0 0	0 0	0 0	0 0	0 0	0 0	0 0	0 0
Local DH System												
Installation of new additional HOBs	$000	0 0	0 0	0 0	0 0	0 0	0 0	829 8	847 6	2 599 9	2 660 5	0 0
Bishkek Electric Supply												
New GTCC#1 75 MWe(net)	$000	0 0	0 0	0 0	0 0	0 0	0 0	0 0	0 0	0 0	0 0	0 0
New TG for TES 1 83 7 MWe(net)	$000	0 0	0 0	0 0	0 0	0 0	12 618 8	12 712 7	0 0	0 0	0 0	0 0
Investment in Electric Energy Transmission & Distribution System												
Ala Archa220/110kV 200 MW grid uprating	$000	0 0	0 0	0 0	0 0	0 0	0 0	0 0	0 0	0 0	0 0	0 0
Investment in District Heating Distribution System												
District heating system upgrades rehab and modernization	$000	0 0	0 0	0 0	0 0	0 0	0 0	0 0	0 0	0 0	0 0	0 0
District heating system ugrades extension of HW network	$000	0 0	0 0	0 0	0 0	0 0	7 183 6	0 0	0 0	0 0	0 0	0 0
Rehabilitation of Steam Distribution Network	$000	0 0	0 0	0 0	0 0	0 0	0 0	0 0	0 0	0 0	0 0	0 0
TOTAL ANNUAL CAPITAL EXPENDITURE	$000	0 0	0 0	0 0	0 0	0 0	19 802 3	13 542 5	847 6	2 599 9	2 660 5	0 0
Debt Service Schedules												
Investment in Electric and Thermal Energy Supply												
Bishkek DH System												
TES 1 CHP Plant Rehabilitation	$000	0 0	0 0	0 0	0 0	0 0	0 0	0 0	0 0	0 0	0 0	0 0
Installation of new additional HOBs	$000	0 0	0 0	0 0	0 0	0 0	0 0	0 0	0 0	0 0	0 0	0 0
Local DH System												
Installation of new additional HOBs	$000	0 0	0 0	0 0	0 0	0 0	0 0	0 0	0 0	266 5	266 5	1 102 0
Bishkek Electric Supply												
New GTCC#1 75 MWe(net)	$000	0 0	0 0	0 0	0 0	0 0	0 0	0 0	0 0	0 0	0 0	0 0
New TG for TES 1 83 7 MWe(net)	$000	0 0	0 0	0 0	0 0	0 0	0 0	0 0	5 321 4	5 321 4	5 321 4	5 321 4
Investment in Electric Energy Transmission & Distribution System												
Ala Archa220/110kV 200 MW grid uprating	$000	0 0	0 0	0 0	0 0	0 0	0 0	0 0	0 0	0 0	0 0	0 0
Investment in District Heating Distribution System												
District heating system upgrades rehab and modernization	$000	0 0	0 0	0 0	0 0	0 0	0 0	0 0	0 0	0 0	0 0	0 0
District heating system ugrades extension of HW network	$000	0 0	0 0	0 0	0 0	0 0	0 0	1 423 9	1 423 9	1 423 9	1 423 9	1 423 9
Rehabilitation of Steam Distribution Network	$000	0 0	0 0	0 0	0 0	0 0	0 0	0 0	0 0	0 0	0 0	0 0
TOTAL ANNUAL INVESTMENT COSTS	$000	0 0	0 0	0 0	0 0	0 0	0 0	1 423 9	6 745 4	6 745 4	6 745 4	6 745 4

154

Case 2a

Summary of Costs

Case Number 2 a DH Sensitivity

Study Year		1	2	3	4	5	6	7	8	9	10	11
Calendar Year		1995	1996	1997	1998	1999	2000	2001	2002	2003	2004	2005
Production Costs												
Primary Energy Expenses												
Coal	$000	43 185	58 560	61 084	61 758	62 650	63 996	65 219	66 093	67 443	69 028	70 658
Mazut	$000	3 272	1 372	1 431	1 447	1 468	1 499	1 528	1 549	1 580	1 617	1 656
Natural gas	$000	15 421	4 255	3 198	2 781	1 987	1 719	1 699	1 044	1 008	1 004	1 016
Grid Electric	$000	7	20	46	82	131	572	747	91	150	229	340
Total primary energy	$000	61 884	64 207	65 760	66 068	66 236	67 787	69 193	68 776	70 181	71 878	73 670
Operating and Maintenance Expenses												
Bishkek TES 1 CHP Plant	$000	11 000	12 342	13 904	15 727	17 864	19 240	21 089	23 115	24 647	27 052	29 724
Bishkek TES 1 and TES 2 HOBs	$000	304	358	409	346	217	173	168	55	46	43	42
Industrial steam distribution system	$000	144	160	178	199	223	252	274	299	327	357	390
District heating distribution system	$000	3 000	3 049	3 006	2 915	2 805	2 939	2 981	3 022	3 062	3 101	3 139
New GTCC plant	$000	0	0	0	0	0	0	0	0	0	0	0
Local DH system HOBs	$000	184	216	0	0	0	0	0	0	0	0	0
Total O&M	$000	14 632	16 124	17 496	19 187	21 109	22 604	24 512	26 490	28 082	30 553	33 296
Total Production Costs	$000	76 515	80 331	83 256	85 254	87 345	90 391	93 705	95 266	98 263	102 431	106 966
Investments												
TES 1 Rehabilitation and New HOBs	$000	0	0	0	0	0	0	0	0	0	0	0
New Self generation Capacity	$000	0	0	0	0	0	12 619	12 713	0	0	0	0
District Heating System Rehabilitation	$000	0	2 898	14 786	8 913	3 150	7 184	0	0	0	0	0
New HOBs for Local DH System	$000	0	0	0	0	0	0	0	0	0	0	0
Total Investment	$000	0	2 898	14 786	8 913	3 150	19 802	12 713	0	0	0	0
Total Annual Cost	$000	76 515	83 229	98 043	94 167	90 494	110 193	106 417	95 266	98 263	102 431	106 966

NPV of Costs		thru 2005	thru 2014
Primary energy expense	$000	395 866	508 710
O&M expense	$000	125,317	185 405
Subtotal production costs	$000	521 183	694 115
Investments	$000	36,069	36,069
Total Annual Costs	$000	557 252	730 184
End effect Adjustment	$000	(7 186)	(7,186)
Total Effective Cost	$000	550 066	722 998

Allocation of Costs Case No 2 a DH Sensitivity

Study Year		1	2	3	4	5	6	7	8	9	10	11
Calendar Year		1995	1996	1997	1998	1999	2000	2001	2002	2003	2004	2005
Production Costs												
Fuel and Primary Energy Expenses												
Electric Account												
Bishkek TES 1 CHP fuel	$000	33 171	33 941	34 910	35 697	37 050	38 430	39 588	40 567	41 496	42 802	44 107
New GTCC fuel	$000	0	0	0	0	0	0	0	0	0	0	0
Grid electric for electric loads	$000	7	20	46	81	130	567	740	90	148	227	337
Total primary energy	$000	33 178	33 961	34 956	35 779	37 180	38 997	40 329	40 657	41 644	43 029	44 445
District Heating Account												
Bishkek TES 1 CHP fuel	$000	20 374	20 900	21 533	21 433	20 999	20 918	21 010	21 103	21 513	21 821	22 177
Bishkek TES 1 and TES 2 HOBs fuel	$000	1 942	2 251	2 526	2 101	1 297	1 015	980	316	265	244	238
Local DH system HOBs fuel	$000	1 178	1 359	0	0	0	0	0	0	0	0	0
Grid electric for pumping power	$000	0	0	1	1	1	5	7	1	1	2	3
GTCC fuel for pumping power	$000	0	0	0	0	0	0	0	0	0	0	0
Bishkek TES 1 CHP fuel for pumping power	$000	524	541	389	378	364	356	358	359	360	365	371
Total primary energy	$000	24 017	25 052	24 448	23 913	22 661	22 294	22 355	21 778	22 139	22 432	22 789
Process Steam Account												
Bishkek TES 1 CHP fuel	$000	4 689	5 194	6 356	6 377	6 395	6 496	6 509	6 341	6 398	6 417	6 436
Operating and Maintenance Expenses												
Electric Account												
Bishkek TES 1 CHP Plant	$000	8 250	9 256	10 428	11 796	13 398	14 430	15 817	17 336	18 486	20 289	22 293
New GTCC	$000	0	0	0	0	0	0	0	0	0	0	0
Total O&M	$000	8 250	9 256	10 428	11 796	13 398	14 430	15 817	17 336	18 486	20 289	22 293
District Heating Account												
Bishkek TES 1 CHP Plant	$000	1 375	1 543	1 738	1 966	2 233	2 405	2 636	2 889	3 081	3 381	3 716
Bishkek TES 1 and TES 2 HOBs	$000	304	358	409	346	217	173	168	55	46	43	42
District heating distribution system	$000	3 000	3 049	3 006	2 915	2 805	2 939	2 981	3 022	3 062	3 101	3 139
Local DH system HOBs	$000	184	216	0	0	0	0	0	0	0	0	0
Total O&M	$000	4 863	5 165	5 152	5 226	5 255	5 517	5 785	5 966	6 189	6 526	6 897
Process Steam Account												
Bishkek TES 1 CHP Plant	$000	1 375	1 543	1 738	1 966	2 233	2 405	2 636	2 889	3 081	3 381	3 716
Process steam distribution system	$000	144	160	178	199	223	252	274	299	327	357	390
Total O&M	$000	1 519	1 703	1 916	2 165	2 456	2 657	2 911	3 189	3 408	3 738	4 105
Debt Service												
Electric Account												
TFS 1 CHP Plant Rehabilitation	$000	0	0	0	0	0	0	0	0	0	0	0
New Self generating Capacity	$000	0	0	0	0	0	0	0	5 321	5 321	5 321	5 321
Ala Archa220/110kV 200 MW grid uprating	$000	0	0	0	0	0	0	0	0	0	0	0
Total	$000	0	0	0	0	0	0	0	5 321	5 321	5 321	5 321
District Heating Account												
TES 1 CHP Plant Rehabilitation	$000	0	0	0	0	0	0	0	0	0	0	0
New HOBs for Bishkek DH System	$000	0	0	0	0	0	0	0	0	0	0	0
New HOBs for Local DH System	$000	0	0	0	0	0	0	0	0	0	0	0
District Heating System Rehabilitation	$000	0	0	574	3 505	5 272	5 896	7 320	7 320	7 320	7 320	7 320
Total	$000	0	0	574	3 505	5 272	5 896	7 320	7 320	7 320	7 320	7 320
Process Steam Account												
TES 1 CHP Plant Rehabilitation	$000	0	0	0	0	0	0	0	0	0	0	0
Steam Distribution System Rehabilitation	$000	0	0	0	0	0	0	0	0	0	0	0
Total	$000	0	0	0	0	0	0	0	0	0	0	0

Partial Tariffs Case No 2 a DH Sensitivity

Study Year		1	2	3	4	5	6	7	8	9	10	11
Calendar Year		1995	1996	1997	1998	1999	2000	2001	2002	2003	2004	2005
Electric Account												
Total production costs	$000	41 428	43 217	45 383	47 574	50 578	53 427	56 145	57 993	60 130	63 318	66 738
Total carrying charges	$000	0	0	0	0	0	0	0	5 321	5,321	5,321	5 321
Total cost of service	$000	41 428	43 217	45 383	47 574	50 578	53 427	56 145	63 314	65 451	68 639	72 059
Total sales of electricity	GWh	1 352 0	1 409 6	1 459 4	1 500 3	1 542 4	1 585 7	1 630 1	1 675 8	1 722 6	1 770 6	1 819 8
Partial tariff production costs	cents/kWh	3 06	3 07	3 11	3 17	3 28	3 37	3 44	3 46	3 49	3 58	3 67
Partial tariff carrying charges	cents/kWh	0 00	0 00	0 00	0 00	0 00	0 00	0 00	0 32	0 31	0 30	0 29
Partial tariff all costs	cents/kWh	3 06	3 07	3 11	3 17	3 28	3 37	3 44	3 78	3 80	3 88	3 96
District Heating Account												
Total production costs	$000	28 880	30 217	29 601	29 139	27 915	27 811	28 140	27 744	28 328	28 958	29 686
Total carrying charges	$000	0	0	574	3 505	5 272	5,896	7 320	7,320	7 320	7,320	7 320
Total cost of service	$000	28 880	30 217	30 175	32 644	33 187	33 707	35 460	35 064	35 648	36 278	37 007
Total sales of district heat	Tcal	2 093 6	2 208 0	2 285 0	2 273 0	2 253 0	2 260 0	2 271 0	2 287 0	2 308 0	2 336 0	2 372 0
Partial tariff production costs	$/Gcal	13 79	13 69	12 95	12 82	12 39	12 31	12 39	12 13	12 27	12 40	12 52
Partial tariff carrying charges	$/Gcal	0 00	0 00	0.25	1.54	2.34	2 61	3 22	3.20	3.17	3.13	3 09
Partial tariff all costs	$/Gcal	13 79	13 69	13 21	14 36	14 73	14 91	15 61	15 33	15 45	15 53	15 60
Process Steam Account												
Total production costs	$000	6 208	6 896	8 272	8 542	8 852	9 153	9 419	9 529	9 806	10 155	10 542
Total carrying charges	$000	0	0	0	0	0	0	0	0	0	0	0
Total cost of service	$000	6 208	6 896	8 272	8 542	8 852	9 153	9 419	9 529	9 806	10 155	10 542
Total sales of process steam	Tcal	400 0	450 0	550 0	550 0	550 0	550 0	550 0	550 0	550 0	550 0	550 0
Partial tariff production costs	$/Gcal	15 52	15 33	15 04	15 53	16 09	16 64	17 13	17 33	17 83	18 46	19 17
Partial tariff carrying charges	$/Gcal	0 00	0.00	0.00	0.00	0.00	0 00	0 00	0.00	0 00	0 00	0 00
Partial tariff all costs	$/Gcal	15 52	15 33	15 04	15 53	16 09	16 64	17 13	17 33	17 83	18 46	19 17

Input Data and Assumptions

Case Number			2 a	DH Sensitivity
Thermal Energy Supply Source	0	TES 1 + HOBs		
Rehabilitate TES 1?	0	No		
Electric Energy Supply Source	0	TES 1 + Grid Electric		
Supplemental Electric Capacity	1	New GTCC		
District Heating Scenario	2	Scenario 2	= Modernization/rehabilitation	
Local DH supply by Bishkek DH?	0	No		
When?	*199*	and beyond		

Study Year			1	2	3	4	5	6	7	8	9	10	11
Calendar Year			1995	1996	1997	1998	1999	2000	2001	2002	2003	2004	2005
Thermal Energy													
District Heating													
Maximum Demand													
Existing customers	generation basis	Gcal/hr	900 0	935 0	985 0	968 0	951 0	938 0	925 0	914 0	906 0	901 0	899 0
New customers	generation basis	Gcal/hr	46 0	53 0	0 0	0 0	0 0	0 0	0 0	0 0	0 0	0 0	0 0
Total	generation basis	Gcal/hr	946 0	988 0	985 0	968 0	951 0	938 0	925 0	914 0	906 0	901 0	899 0
Disposition of energy													
Existing customers	sales basis	Tcal	2 000 0	2 100 0	2 285 0	2 273 0	2 253 0	2 260 0	2 271 0	2 287 0	2 308 0	2 336 0	2 372 0
New customers	generation basis	Tcal	*104 0*	*120 0*	*0 0*	0 0	0 0	0 0	0 0	0 0	0 0	0 0	0 0
Contingency Requirements (LU or 15/)													
Bishkek DH System	15 0/	Gcal/hr	135 0	140 3	147 8	145 2	142 7	140 7	138 8	155 0	155 0	155 0	155 0
Local DH System	15 0/	Gcal/hr	50 0	50 0	0 0	0 0	0 0	0 0	0 0	0 0	0 0	0 0	0 0
District heating pipe losses													
Bishkek DH system		/	25 01/	25 00/	21 23/	19 96/	16 64/	13 94/	13 62/	13 53/	13 46/	13 32/	13 11/
Local DH system		/	10 00/	10 00/	10 00/	10 00/	10 00/	10 00/	10 00/	10 00/	10 00/	10 00/	10 00/
DH pumping at booster stations		kWh/Gcal	7 70	7 70	5 60	5 60	5 60	5 60	5 60	5 60	5 60	5 60	5 60
CHP plant piping efficiency		/	96 0/										
Process Steam													
Energy	generation basis	Tcal	571 4	642 9	785 7	785 7	785 7	785 7	785 7	785 7	785 7	785 7	785 7
Piping losses		/	30 00/	30 00/	30 00/	30 00/	30 00/	30 00/	30 00/	30 00/	30 00/	30 00/	30 00/
Ratio of annual maximum demand to annual average demand			2 0										
Heat exchange efficiency steam > hot water		Gcal/hr/Gcal/hr	1 0										
Electric Energy			1995	1996	1997	1998	1999	2000	2001	2002	2003	2004	2005
Maximum Demand local customers	generation basis	MW	425 0	434 2	443 6	453 3	463 1	473 2	483 4	493 9	504 6	515 6	526 8
annual growth		/		2 2/	2 2/	2 2/	2 2/	2 2/	2 2/	2 2/	2 2/	2 2/	2 2/
Disposition of energy local customers	sales basis	GWh	1 002 0	1 052 0	1 094 0	1 127 0	1 161 0	1 196 0	1 232 0	1 269 0	1 307 0	1 346 0	1 386 0
annual growth		/		5 0/	4 0/	3 0/	3 0/	3 0/	3 0/	3 0/	3 0/	3 0/	3 0/
T&D losses			12 0/	12 0/	12 0/	11 0/	11 0/	11 0	11 0/	11 0	10 0/	10 0/	10 0/
Contingency requirement (LU or 15/ max)	15 0/	MW	80 0	81 6	83 0	84 8	86 6	88 5	90 4	92 3	94 3	96 3	98 4
Grid capability		MW	200 0	200 0	200 0	200 0	200 0	200 0	200 0	200 0	200 0	200 0	200 0
	esc after 2005												
Grid electricity price forecast	0 0/	$/kWh	0 0300	0 0300	0 0300	0 0300	0 0300	0 0300	0 0300	*0 0300*	*0 0300*	*0 0300*	*0 0300*
GTCC unit addition block size		MW	75 0										
GTCC capability		MW	0 0	0 0	0 0	0 0	0 0	0 0	0 0	0 0	0 0	0 0	0 0
GTCC fuel cost		$/kWh	0 0189	0 0189	0 0189	0 0189	0 0189	0 0189	0 0189	0 0189	0 0189	0 0189	0 0189
GTCC annual average heat rate		kcal/kWh	2 008 1										
Maximum Demand transfers	generation basis	MW	100 0	102 2	104 4	106 7	109 0	111 3	113 7	116 2	118 7	121 3	123 9
annual growth				2 2	2 2	2 2/	2 2	2 2	2 2	2 2/	2 2/	2 2/	2 2
Disposition of energy transfers	sales basis	GWh	350 0	357 6	365 4	373 3	381 4	389 7	398 1	406 8	415 6	424 6	433 8
annual growth				2 2/	2 2/	2 2/	2 2/	2 2/	2 2/	2 2	2 2/	2 2/	2 2/
Fuel Price Forecast	esc after 2005												
Coal	0 0/	$/Gcal	8 80	8 80	8 80	8 80	8 80	8 80	8 80	8 80	8 80	8 80	8 80
Mazut	0 0/	$/Gcal	10 00	10 00	10 00	10 00	10 00	10 00	10 00	10 00	10 00	10 00	10 00
Natural Gas	0 0/	$/Gcal	9 40	9 40	9 40	9 40	9 40	9 40	9 40	9 40	9 40	9 40	9 40

Fuel Mix for Supply Resources		1995	1996	1997	1998	1999	2000	2001	2002	2003	2004	2005
TES 1 CHP boilers												
Coal	%	75.0%	97.0%	97.0%	97.0%	97.0%	97.0%	97.0%	97.0%	97.0%	97.0%	97.0%
Mazut	%	5.0%	2.0%	2.0%	2.0%	2.0%	2.0%	2.0%	2.0%	2.0%	2.0%	2.0%
Natural Gas	%	20.0%	1.0%	1.0%	1.0%	1.0%	1.0%	1.0%	1.0%	1.0%	1.0%	1.0%
Weighted average fuel price	$/Gcal	8.98	8.83	8.83	8.83	8.83	8.83	8.83	8.83	8.83	8.83	8.83
Bishkek HOBs												
Coal	%	0.0%	0.0%	0.0%	0.0%	0.0%	0.0%	0.0%	0.0%	0.0%	0.0%	0.0%
Mazut	%	0.0%	0.0%	0.0%	0.0%	0.0%	0.0%	0.0%	0.0%	0.0%	0.0%	0.0%
Natural Gas	%	100.0%	100.0%	100.0%	100.0%	100.0%	100.0%	100.0%	100.0%	100.0%	100.0%	100.0%
Weighted average fuel price	$/Gcal	9.40	9.40	9.40	9.40	9.40	9.40	9.40	9.40	9.40	9.40	9.40
Local DH Boilers												
Coal	%	0.0%	0.0%	0.0%	0.0%	0.0%	0.0%	0.0%	0.0%	0.0%	0.0%	0.0%
Mazut	%	0.0%	0.0%	0.0%	0.0%	0.0%	0.0%	0.0%	0.0%	0.0%	0.0%	0.0%
Natural Gas	%	100.0%	100.0%	100.0%	100.0%	100.0%	100.0%	100.0%	100.0%	100.0%	100.0%	100.0%
Weighted average fuel price	$/Gcal	9.40	9.40	9.40	9.40	9.40	9.40	9.40	9.40	9.40	9.40	9.40
Boiler efficiencies		1995	1996	1997	1998	1999	2000	2001	2002	2003	2004	2005
Bishkek CHP boilers (TES 1)		87.5%	87.3%	87.1%	86.9%	86.7%	86.5%	86.3%	86.1%	85.9%	85.7%	85.5%
Bishkek HOBs (TES 1 and TES 2)	%	89.0%	89.0%	89.0%	89.0%	89.0%	89.0%	89.0%	89.0%	89.0%	89.0%	89.0%
Local HOBs (Frunze JAL)												
Coal	%	0.0%	0.0%	0.0%	0.0%	0.0%	0.0%	0.0%	0.0%	0.0%	0.0%	0.0%
Mazut	%	89.0%	89.0%	89.0%	89.0%	89.0%	89.0%	89.0%	89.0%	89.0%	89.0%	89.0%
Natural gas	%	83.0%	83.0%	83.0%	83.0%	83.0%	83.0%	83.0%	83.0%	83.0%	83.0%	83.0%
Weighted average	%	*83.0%*	*83.0%*	*83.0%*	*83.0%*	*83.0%*	*83.0%*	*83.0%*	*83.0%*	*83.0%*	*83.0%*	*83.0%*
Process steam generation	Gcal/hr add'l heat input per Gcal/hr steam	0.63	0.63	0.63	0.63	0.63	0.64	0.64	0.64	0.64	0.64	0.64
Performance Degradation												
Annual change in boiler efficiency	%	0.20%										
Annual change in electric capability	%	0.10%										
Fuel Allocation for Cogeneration Energy												
Methodology #A CHP advantage devoted to DH energy												
Electric power only production efficiency	%	30.0%										
Methodology #B CHP advantage devoted to electric energy												
Distric heat only production efficiency	%	87.0%										
Allocation Factors for TES 1 CHP Plant O&M and Investment												
% allocated to electric production	%	75.0%										
% allocated to district heating production	%	12.5%										
% allocated to process steam production	%	12.5%										
Economic and Financial Parameters												
Capital cost real escalation rates		1995-2000	2001-2014									
Western	%	0.00%	0.00%									
Russian	%	0.00%	0.00%									
Kyrgyz labor	%	16.90%	6.60%									
Kyrgyz material	%	1.70%	0.90%									
Kyrgyz equipment	%	1.50%	3.20%									
Discount Rate for NPV Calculation	%	12.00%										
Physical contingencies + technical assistance & training	% of direct costs	12.50%										
Composite escalation factors												
Western		1.000	1.000	1.000	1.000	1.000	1.000	1.000	1.000	1.000	1.000	1.000
Russian		1.000	1.000	1.000	1.000	1.000	1.000	1.000	1.000	1.000	1.000	1.000
Kyrgyz labor		1.000	1.169	1.367	1.598	1.867	2.183	2.327	2.481	2.645	2.819	3.005
Kyrgyz material		1.000	1.017	1.034	1.052	1.070	1.088	1.098	1.108	1.118	1.128	1.138
Kyrgyz equipment		1.000	1.015	1.030	1.046	1.061	1.077	1.112	1.147	1.184	1.222	1.261

0.00%	0.00%
0.00%	0.00%
16.90	6.60%
1.70%	0.90%

Load Forecast

Case Number 2 a DH Sensitivity

Load Forecast Development

Study Year		1	2	3	4	5	6	7	8	9	10	11
Calendar Year		1995	1996	1997	1998	1999	2000	2001	2002	2003	2004	2005
District heating pipe losses												
Bishkek DH system	/	25 01 /	25 00 /	21 23 /	19 96 /	16 64 /	13 94 /	13 62 /	13 53 /	13 46 /	13 32 /	13 11 /
Local DH system	/	10 00 /	10 00 /	10 00 /	10 00 /	10 00 /	10 00% /	10 00 /	10 00% /	10 00 /	10 00 /	10 00 /
T&D losses (in Bishkek)	/	12 0 /	12 0 /	12 0 /	11 0 /	11 0 /	11 0 /	11 0 /	11 0 /	10 0% /	10 0 /	10 0 /
Thermal Energy												
Bishkek DH System Hot Water												
Maximum Demand (generation basis)												
Existing customers	Gcal/hr	900 0	935 0	985 0	968 0	951 0	938 0	925 0	914 0	906 0	901 0	899 0
New customers	Gcal/hr	0.0	0.0	0.0	0.0	0.0	0.0	0.0	0.0	0.0	0.0	0.0
Total Maximum Demand	*Gcal/hr*	*900 0*	*935 0*	*985 0*	*968 0*	*951 0*	*938 0*	*925 0*	*914 0*	*906 0*	*901 0*	*899 0*
Disposition of Energy												
Existing customers	Tcal	2 000 0	2 100 0	2 285 0	2 273 0	2 253 0	2 260 0	2 271 0	2 287 0	2 308 0	2 336 0	2 372 0
New customers	Tcal	0.0	0.0	0.0	0.0	0.0	0.0	0 0	0.0	0.0	0.0	0 0
Total (sales basis)	Tcal	2 000 0	2 100 0	2 285 0	2 273 0	2 253 0	2 260 0	2 271 0	2 287 0	2 308 0	2 336 0	2 372 0
Distribution losses												
Existing customers	Tcal	667 0	700 0	615 9	566 8	449 7	366 1	358 1	357 8	359 0	359 0	357 9
New customers	Tcal	0.0	0 0	0 0	0.0	0 0	0.0	0 0	0.0	0.0	0 0	0 0
Total Disposition of Energy	*Tcal*	*2 667 0*	*2 800 0*	*2 900 9*	*2 839 8*	*2 02*	*2 676 1*	*2 629 1*	*2 644 8*	*2 66 0*	*2 695 0*	*2 29 9*
Bishkek DH System Process Steam												
Energy generation basis	Tcal	571 4	642 9	785 7	785 7	785 7	785 7	785 7	785 7	785 7	785 7	785 7
Energy sales basis	Tcal	400 0	450 0	550 0	550 0	550 0	550 0	550 0	550 0	550 0	550 0	550 0
Local DH System Hot Water												
Maximum Demand (generation basis)	Gcal/hr	46 0	53 0	0 0	0 0	0 0	0 0	0 0	0 0	0 0	0 0	0 0
Disposition of Energy												
Existing customers	Tcal	93 6	108 0	0 0	0 0	0 0	0 0	0 0	0 0	0 0	0 0	0 0
Distribution losses	Tcal	10.4	12.0	0.0	0.0	0.0	0.0	0 0	0.0	0.0	0 0	0.0
Total Disposition of Energy	*Tcal*	104 0	120 0	0 0	0 0	0 0	0 0	0 0	0 0	0 0	0 0	0 0
Electric Energy												
Maximum Demand (generation basis)												
Local customers	MW	425 0	434 2	443 6	453 3	463 1	473 2	483 4	493 9	504 6	515 6	526 8
Transfers	MW	100 0	102 2	104 4	106 7	109 0	111 3	113 7	116 2	118 7	121 3	123 9
DH pumping power	MW	7.3	7 6	5.5	5.4	5.3	5.3	5.2	5 1	5.1	5.0	5 0
Total Maximum Demand	*MW*	*532 3*	*544 0*	*553 5*	*565 3*	*5 4*	*589*	*60? 4*	*615 2*	*628 4*	*641 9*	*655 8*
Disposition of Energy												
Local customers (sales basis)	GWh	1 002 0	1 052 0	1 094 0	1 127 0	1 161 0	1 196 0	1 232 0	1 269 0	1 307 0	1 346 0	1 386 0
Transfers	GWh	350 0	357 6	365 4	373 3	381 4	389 7	398 1	406 8	415 6	424 6	433 8
DH pumping power	GWh	21 3	22 5	16 2	15 9	15 1	14 7	14 7	14 8	14 9	15 1	15 3
Total consumption	GWh	1 373 3	1 432 1	1 475 6	1 516 2	1 557 5	1 600 4	1 644 8	1 690 6	1 737 5	1 785 7	1 835 1
T&D losses	GWh	187 3	195 3	201 2	187 4	192 5	197 8	203 3	208 9	193 1	198.4	203.9
Total Disposition of Energy	*GWh*	*1 560 6*	*1 62 4*	*1 6 6 8*	*1 03 6*	*1 50 0*	*1 98 2*	*1 848 1*	*1 899 5*	*1 930 6*	*1 984 1*	*2 039 0*

Summary of Load Forecasts (generation basis)

Calendar Year		1995	1996	199	1998	1999	2000	2001	2002	2003	2004	2005
Thermal Load to be Served by Bishkek DH System												
Maximum Demand Hot Water	Gcal/hr	900 0	935 0	985 0	968 0	951 0	938 0	925 0	914 0	906 0	901 0	899 0
Thermal Energy Hot Water	Tcal	2 667 0	2 800 0	2 900 9	2 839 8	2 702 7	2 626 1	2 629 1	2 644 8	2 667 0	2 695 0	2 729 9
Maximum Demand Process Steam	Gcal/hr	130 5	146 8	179 4	179 4	179 4	179 4	179 4	179 4	179 4	179 4	179 4
Thermal Energy Process Steam	Tcal	571 4	642 9	785 7	785 7	785 7	785 7	785 7	785 7	785 7	785 7	785 7
Thermal Load to be Served by Local DH System												
Maximum Demand Hot Water	Gcal/hr	46 0	53 0	0 0	0 0	0 0	0 0	0 0	0 0	0 0	0 0	0 0
Thermal Energy Hot Water	Tcal	104 0	120 0	0 0	0 0	0 0	0 0	0 0	0 0	0 0	0 0	0 0
Maximum Demand Process Steam	Gcal/hr	0 0	0 0	0 0	0 0	0 0	0 0	0 0	0 0	0 0	0 0	0 0
Thermal Energy Process Steam	Tcal	0 0	0 0	0 0	0 0	0 0	0 0	0 0	0 0	0 0	0 0	0 0
Total Thermal Load to be Served												
Maximum Demand Hot Water	Gcal/hr	946 0	988 0	985 0	968 0	951 0	938 0	925 0	914 0	906 0	901 0	899 0
Thermal Energy Hot Water	Tcal	2 771 0	2 920 0	2 900 9	2 839 8	2 702 7	2 626 1	2 629 1	2 644 8	2 667 0	2 695 0	2 729 9
Maximum Demand Process Steam	Gcal/hr	130 5	146 8	179 4	179 4	179 4	179 4	179 4	179 4	179 4	179 4	179 4
Thermal Energy Process Steam	Tcal	571 4	642 9	785 7	785 7	785 7	785 7	785 7	785 7	785 7	785 7	785 7
Total Electric Load Forecast												
Maximum Demand	MW	532 3	544 0	553 5	565 3	577 4	589 7	602 4	615 2	628 4	641 9	655 8
Electric Energy	GWh	1,560 6	1 627 4	1 676 8	1 703 6	1 750 0	1,798 2	1,848 1	1,899 5	1 930 6	1,984 1	2,039 0

Load/Capacity Balance

Case No 2 a DH Sensitivity

Study Year		1	2	3	4	5	6	7	8	9	10	11
Calendar Year		1995	1996	1997	1998	1999	2000	2001	2002	2003	2004	2005
Electric Energy												
Maximum Demand	MW	532 3	544 0	553 5	565 3	577 4	589 7	602 4	615 2	628 4	641 9	655 8
Existing capacity resources												
TES 1 CHP Plant	MW	550 5	549 9	549 4	548 9	548 3	506 1	505 6	505 1	588 2	587 6	587 0
Grid electric capacity	MW	200 0	200 0	200 0	200 0	200 0	200 0	200 0	200 0	200 0	200 0	200 0
GTCC	MW	0 0	0.0	0.0	0.0	0.0	0.0	0.0	0.0	0.0	0.0	0 0
Total capacity resources before additions	MW	750 5	749 9	749 4	748 9	748 3	706 1	705 6	705 1	788 2	787 6	787 0
/ reserve before capacity additions	/	41 0%	37 9%	35 4/	32 5/	29 6/	19 7/	17 1/	14 6/	25 4/	22 7/	20 0/
Capacity resources required	MW	612 3	625 6	636 6	650 1	664 0	678 2	692 7	707 5	722 7	738 2	754 1
Additional capacity required (minimum)	MW	0 0	0 0	0 0	0 0	0 0	0 0	0 0	2 4	0 0	0 0	0 0
Capacity additions/retirements												
TES 1 CHP Rehabilitation (install TG11 or equiv)	MW	0 0	0 0	0 0	0 0	0 0	0 0	0 0	83 7	0 0	0 0	0 0
TES 1 CHP Retirement of Unit 1 and 2	MW	0 0	0 0	0 0	0 0	(41 7)	0 0	0 0	0 0	0 0	0 0	0 0
Grid electric capacity additions	MW	0 0	0 0	0 0	0 0	0 0	0 0	0 0	0 0	0 0	0 0	0 0
GTCC capacity additions	MW	0 0	0 0	0 0	0 0	0 0	0 0	0 0	0 0	0 0	0 0	0 0
Total capacity resources after additions	MW	750 5	749 9	749 4	748 9	748 3	706 1	705 6	788 8	788 2	787 6	787 0
/ reserve after capacity additions	/	41 0/	37 9%	35 4/	32 5/	29 6/	19 7/	17 1/	28 2/	25 4/	22 7/	20 0/
Thermal Energy Hot Water												
Bishkek DH System												
Maximum Demand	Gcal/hr	900 0	935 0	985 0	968 0	951 0	938 0	925 0	914 0	906 0	901 0	899 0
Existing capacity resources												
TES 1 CHP Plant												
nominal HW capacity	Gcal/hr	740 0	740 0	740 0	740 0	740 0	656 4	656 4	811 4	811 4	811 4	811 4
peaking HW capacity	Gcal/hr	281.3	265.0	232.4	232 4	232.4	229 0	229 0	229 0	229.0	229 0	229.0
total	Gcal/hr	1 021 3	1 005 0	972 4	972 4	972 4	885 4	885 4	1 040 4	1 040 4	1 040 4	1 040 4
TES 1HOBs	Gcal/hr	300 0	300 0	300 0	300 0	300 0	300 0	300 0	300 0	300 0	300 0	300 0
TES 2 HOBs	Gcal/hr	192 0	192 0	192 0	192 0	192 0	192 0	192 0	192 0	192 0	192 0	192 0
Existing HOBs Frunze	Gcal/hr	0 0	0 0	150 0	150 0	150 0	150 0	150 0	150 0	150 0	150 0	0 0
Existing HOBs JAL	Gcal/hr	0 0	0 0	40 0	40 0	40 0	40 0	40 0	40 0	40 0	40 0	40 0
New HOBs in local DH system	Gcal/hr	0.0	0.0	0.0	0.0	0 0	0 0	0.0	0.0	0.0	0.0	0 0
Total capacity resources before additions	Gcal/hr	1 513 3	1 497 0	1 654 4	1 654 4	1 654 4	1 567 4	1 567 4	1 722 4	1 722 4	1 722 4	1 572 4
/ reserve before capacity additions	/	68 1/	60 1/	68 0%	70 9/	74 0/	67 1/	69 5/	88 4/	90 1/	91 2/	74 9/
Capacity resources required	Gcal/hr	1 035 0	1 075 3	1 132 8	1 113 2	1 093 7	1 078 7	1 063 8	1 069 0	1 061 0	1 056 0	1 054 0
Additional capacity required (minimum)	Gcal/hr	0 0	0 0	0 0	0 0	0 0	0 0	0 0	0 0	0 0	0 0	0 0
Capacity additions/retirements												
New HOB capacity	Gcal/hr	0 0	0 0	0 0	0 0	0 0	0 0	0 0	0 0	0 0	0 0	0 0
Total capacity resources after additions	Gcal/hr	1 513 3	1 497 0	1 654 4	1 654 4	1 654 4	1 567 4	1 567 4	1 722 4	1 722 4	1 722 4	1 572 4
/ reserve after capacity additions	/	68 1/	60 1/	68 0/	70 9%	74 0/	67 1/	69 5/	88 4/	90 1/	91 2/	74 9/
Local DH System												
Maximum Demand	Gcal/hr	46 0	53 0	0 0	0 0	0 0	0 0	0 0	0 0	0 0	0 0	0 0
Existing capacity resources												
Existing HOBs Frunze	Gcal/hr	150 0	150 0	0 0	0 0	0 0	0 0	0 0	0 0	0 0	0 0	0 0
Existing HOBs JAL	Gcal/hr	40 0	40 0	0 0	0 0	0 0	0 0	0 0	0 0	0 0	0 0	0 0
New HOBs capacity additions	Gcal/hr	0 0	0 0	0 0	0 0	0 0	0 0	0 0	0 0	0 0	0 0	0 0
Total capacity resources before additions	Gcal/hr	190 0	190 0	0 0	0 0	0 0	0 0	0 0	0 0	0 0	0 0	0 0
/ reserve before capacity additions	/	313 0/	258 5/	n/a	n/a	n/a	n/a	n/a	n/a	n/a	n/a	n/a
Capacity resources required	Gcal/hr	96 0	103 0	0 0	0 0	0 0	0 0	0 0	0 0	0 0	0 0	0 0
Additional capacity required (minimum)	Gcal/hr	0 0	0 0	0 0	0 0	0 0	0 0	0 0	0 0	0 0	0 0	0 0
Capacity additions/retirements												
New HOB capacity	Gcal/hr	0 0	0 0	0 0	0 0	0 0	0 0	0 0	0 0	0 0	0 0	0 0
Frunze boiler retirements	Gcal/hr	0 0	0 0	0 0	0 0	0 0	0 0	0 0	0.0	0 0	0 0	0 0
Total capacity resources after additions	Gcal/hr	190 0	190 0	0 0	0 0	0 0	0 0	0 0	0 0	0 0	0 0	0 0
/ reserve after capacity additions	/	313 0/	258 5/	n/a	n/a	n/a	n/a	n/a	n/a	n/a	n/a	n/a
Thermal Energy Process Steam												
Maximum Demand	Gcal/hr	130 5	146 8	179 4	179 4	179 4	179 4	179 4	179 4	179 4	179 4	179 4
Existing capacity resources (TES 1 CHP)	Gcal/hr	411 8	411 8	411 8	411 8	411 8	408 4	408 4	408 4	408 4	408 4	408 4
/ reserve	/	215 6	180 6/	129 6/	129 6/	129 6/	127 7/	127 7/	127 7/	127 7/	127 7/	127 7/

Energy Production/Fuel Consumption Summary

Case Number 2 a DH Sensitivity

Study Year		1	2	3	4	5	6	7	8	9	10	11
Calendar Year		1995	1996	1997	1998	1999	2000	2001	2002	2003	2004	2005
Energy Production												
Electric Energy Generation												
Bishkek CHP Plant (TES 1)	GWh	1 560 4	1 626 7	1 675 3	1 700 8	1 745 7	1 779 1	1 823 2	1 896 5	1 925 6	1 976 5	2 027 7
Grid electric	GWh	0 2	0 7	1 5	2 7	4 4	19 1	24 9	3 0	5 0	7 6	11 3
GTCC	GWh	0 0	0 0	0.0	0 0	0.0	0 0	0 0	0 0	0 0	0.0	0 0
Total	GWh	1 560 6	1 627 4	1 676 8	1 703 6	1 750 0	1 798 2	1 848 1	1 899 5	1 930 6	1 984 1	2 039 0
Thermal Energy Generation												
District heating (heat hot water)												
Bishkek CHP Plant (TES 1)	Tcal	2 483 2	2 586 9	2 661 7	2 640 9	2 579 9	2 530 0	2 536 2	2 614 9	2 641 9	2 671 9	2 707 3
Bishkek HOBs (TES 1 and TES 2)	Tcal	183 9	213 1	239 1	198 9	122 8	96 1	92 8	29 9	25 1	23 1	22 6
Local DH System HOBs	Tcal	104.0	120 0	0.0	0.0	0.0	0.0	0 0	0.0	0.0	0.0	0.0
Total	Tcal	2 771 0	2 920 0	2 900 9	2 839 8	2 702 7	2 626 1	2 629 1	2 644 8	2 667 0	2 695 0	2 729 9
Process steam												
Bishkek DH system (TES 1)	Tcal	571 4	642 9	785 7	785 7	785 7	785 7	785 7	785 7	785 7	785 7	785 7
Fuel Consumption												
Bishkek DH System												
Coal	Tcal	4 907 4	6 654 5	6 941 4	7 017 9	7 119 3	7 272 3	7 411 2	7 510 6	7 664 0	7 844 0	8 029 3
Mazut	Tcal	327 2	137 2	143 1	144 7	146 8	149 9	152 8	154 9	158 0	161 7	165 6
Natural gas	Tcal	1 515 2	308 1	340.2	295 8	211 4	182.9	180 7	111.0	107.2	106.8	108.1
Total	Tcal	6 749 7	7 099 8	7 424 8	7 458 5	7 477 5	7 605 2	7 744 8	7 776 5	7 929 3	8 112 6	8 303 0
Local DH System												
Coal	Tcal	0 0	0 0	0 0	0 0	0 0	0 0	0 0	0 0	0 0	0 0	0 0
Mazut	Tcal	0 0	0 0	0 0	0 0	0 0	0 0	0 0	0 0	0 0	0 0	0 0
Natural gas	Tcal	125.3	144 6	0 0	0.0	0.0	0 0	0 0	0 0	0 0	0.0	0.0
Total	Tcal	125 3	144 6	0 0	0 0	0 0	0 0	0 0	0 0	0 0	0 0	0 0
GTCC natural gas	Tcal	0 0	0 0	0 0	0 0	0 0	0 0	0 0	0 0	0 0	0 0	0 0
Total Fuel Consumption	Tcal	6 875 0	7 244 4	7 424 8	7 458 5	7 477 5	7 605 2	7 744 8	7 776 5	7 929 3	8 112 6	8 303 0
/ by type												
Coal	/	71 4/	91 9/	93 5/	94 1/	95 2/	95 6/	95 7/	96 6/	96 7/	96 7/	96 7/
Mazut	/	4 8/	1 9/	1 9/	1 9/	2 0/	2 0/	2 0/	2 0/	2 0/	2 0/	2 0/
Natural gas	%	23.9%	6.2/	4 6%	4.0%	2.8%	2 4%	2 3%	1 4%	1 4%	1.3%	1 3/
Total	/	100 0/	100 0/	100 0/	100 0/	100 0/	100 0/	100 0/	100 0/	100 0/	100 0/	100 0/

Generating Resource Characteristics

Case Number 2 a DH Sensitivity

Study Year			1	2	3	4	5	6	7	8	9	10	11
Calendar Year			1995	1996	1997	1998	1999	2000	2001	2002	2003	2004	2005
TES 1 CHP Plant			1995	1996	1997	1998	1999	2000	2001	2002	2003	2004	2005
Electric Capability													
Unit #1		MW	35 0	35 0	35 0	35 0	35 0	0 0	0 0	0 0	0 0	0 0	0 0
Unit #2		MW	25 0	25 0	25 0	25 0	25 0	0 0	0 0	0 0	0 0	0 0	0 0
Unit #3		MW	50 0	50 0	50 0	50 0	50 0	50 0	50 0	50 0	50 0	50 0	50 0
Unit #4		MW	35 0	35 0	35 0	35 0	35 0	35 0	35 0	35 0	35 0	35 0	35 0
Unit #5		MW	35 0	35 0	35 0	35 0	35 0	35 0	35 0	35 0	35 0	35 0	35 0
Unit #6		MW	86 0	86 0	86 0	86 0	86 0	86 0	86 0	86 0	86 0	86 0	86 0
Unit #7		MW	60 0	60 0	60 0	60 0	60 0	60 0	60 0	60 0	60 0	60 0	60 0
Unit #8		MW	60 0	60 0	60 0	60 0	60 0	60 0	60 0	60 0	60 0	60 0	60 0
Unit #9		MW	86 0	86 0	86 0	86 0	86 0	86 0	86 0	86 0	86 0	86 0	86 0
Unit #10		MW	86 0	86 0	86 0	86 0	86 0	86 0	86 0	86 0	86 0	86 0	86 0
Unit #11	1	MW	0.0	0.0	0.0	0.0	0 0	0 0	0.0	90 0	90 0	90.0	90.0
Total		MW	558 0	558 0	558 0	558 0	558 0	498 0	498 0	588 0	588 0	588 0	588 0
Largest Unit		MW	86 0	86 0	86 0	86 0	86 0	86 0	86 0	90 0	90 0	90 0	90 0
		MW net	80 0	80 0	80 0	80 0	80 0	80 0	80 0	83 7	83 7	83 7	83 7
DH Capability Hot Water													
Unit #1		Gcal/hr	35 0	35 0	35 0	35 0	35 0	0 0	0 0	0 0	0 0	0 0	0 0
Unit #2		Gcal/hr	48 6	48 6	48 6	48 6	48 6	0 0	0 0	0 0	0 0	0 0	0 0
Unit #3		Gcal/hr	51 0	51 0	51 0	51 0	51 0	51 0	51 0	51 0	51 0	51 0	51 0
Unit #4		Gcal/hr	97 0	97 0	97 0	97 0	97 0	97 0	97 0	97 0	97 0	97 0	97 0
Unit #5		Gcal/hr	97 0	97 0	97 0	97 0	97 0	97 0	97 0	97 0	97 0	97 0	97 0
Unit #6		Gcal/hr	102 6	102 6	102 6	102 6	102 6	102 6	102 6	102 6	102 6	102 6	107 6
Unit #7		Gcal/hr	61 0	61 0	61 0	61 0	61 0	61 0	61 0	61 0	61 0	61 0	61 0
Unit #8		Gcal/hr	61 0	61 0	61 0	61 0	61 0	61 0	61 0	61 0	61 0	61 0	61 0
Unit #9		Gcal/hr	102 6	102 6	102 6	102 6	102 6	102 6	102 6	102 6	102 6	102 6	102 6
Unit #10		Gcal/hr	103 0	103 0	103 0	103 0	103 0	103 0	103 0	103 0	103 0	103 0	103 0
Unit #11		Gcal/hr	0 0	0.0	0 0	0 0	0 0	0 0	0 0	155 0	155 0	155 0	155 0
Total		Gcal/hr	758 8	758 8	758 8	758 8	758 8	675 2	675 2	830 2	830 2	830 2	830 2
Largest Unit		Gcal/hr	103 0	103 0	103 0	103 0	103 0	103 0	103 0	155 0	155 0	155 0	155 0
Boiler Efficiencies			1999	2003									
w/o Rehabilitation			87 5/										
w/Rehabilitation		/	89 5/										
Boiler #14		/	87 5/	87 3/	87 1/	86 9/	86 7/	86 5/	86 3/	86 1/	85 9/	85 7	85 5/
Boiler #15		/	87 5/	87 3/	87 1/	86 9/	86 7/	86 5/	86 3/	86 1/	85 9/	85 7/	85 5/
Boiler #16		/	87 5/	87 3/	87 1/	86 9/	86 7/	86 5/	86 3/	86 1/	85 9/	85 7/	85 5/
Boiler #17			87 5/	87 3/	87 1/	86 9/	86 7/	86 5/	86 3/	86 1/	85 9/	85 7	85 5/
Boiler #18		/	87 5/	87 3/	87 1/	86 9/	86 7	86 5/	86 3	86 1/	85 9/	85 7/	85 5/
Boiler #19		/	87 5/	87 3/	87 1/	86 9/	86 7/	86 5/	86 3/	86 1/	85 9/	85 7/	85 5/
Boiler #20			87 5/	87 3/	87 1/	86 9/	86 7/	86 5/	86 3/	86 1/	85 9	85 7	85 5/
Boiler #21		/	87 5	87 3/	87 1/	86 9	86 7/	86 5/	86 3/	86 1/	85 9/	85 7/	85 5/
Boiler #22			87 5/	87 3/	87 1/	86 9/	86 7/	86 5/	86 3/	86 1/	85 9	85 7	85 5/
Boiler #23			87 5/	87 3/	87 1/	86 9/	86 7/	86 5/	86 3/	86 1/	85 9/	85 7/	85 5/
Boiler #24		/	87 5/	87 3/	87 1/	86 9/	86 7/	86 5/	86 3/	86 1/	85 9/	85 7/	85 5/
Weighted average		/	87 5/	87 3/	87 1/	86 9/	86 7/	86 5/	86 3/	86 1/	85 9/	85 7/	85 5/

Calendar year		1995	1996	1997	1998	1999	2000	2001	2002	2003	2004	2005
TES 1 CHP Plant Electrical Rating w/o Rehabilitation												
@ Zero DH Load	MW gross	504 0	504 0	504 0	504 0	504 0	504 0	504 0	504 0	504 0	504 0	504 0
@ 35/ DH Load	MW gross	596 5	596 5	596 5	596 5	596 5	565 5	565 5	565 5	565 5	565 5	565 5
@ 75/ DH Load	MW gross	586 5	586 5	586 5	586 5	586 5	541 0	541 0	541 0	541 0	541 0	541 0
@ Full DH Load	MW gross	550 5	550 5	550 5	550 5	550 5	505 5	505 5	505 5	505 5	505 5	505 5
Change in TES 1 Electrical Rating w/ Rehabilitation												
@ Zero DH Load	MW gross	0 0	0 0	0 0	0 0	0 0	0 0	0 0	75 0	0 0	0 0	0 0
@ 35/ DH Load	MW gross	0 0	0 0	0 0	0 0	0 0	0 0	0 0	54 0	0 0	0 0	0 0
@ 75/ DH Load	MW gross	0 0	0 0	0 0	0 0	0 0	0 0	0 0	99 4	0 0	0 0	0 0
@ Full DH Load	MW gross	0 0	0 0	0 0	0 0	0 0	0 0	0 0	90 0	0 0	0 0	0 0
TES 1 CHP Plant Electrical Rating w/ Rehabilitation												
@ Zero DH Load	MW gross	504 0	504 0	504 0	504 0	504 0	504 0	504 0	579 0	579 0	579 0	579 0
@ 35/ DH Load	MW gross	596 5	596 5	596 5	596 5	596 5	565 5	565 5	619 5	619 5	619 5	619 5
@ 75/ DH Load	MW gross	586 5	586 5	586 5	586 5	586 5	541 0	541 0	640 4	640 4	640 4	640 4
@ Full DH Load	MW gross	550 5	550 5	550 5	550 5	550 5	505 5	505 5	595 5	595 5	595 5	595 5
Auxiliary power consumption	%	7 0/	7 0/	7 0%	7 0/	7 0%	7 0/	7 0/	7 0/	7 0/	7 0/	7 0/
@ Zero DH Load	MW net	468 7	468 7	468 7	468 7	468 7	468 7	468 7	468 7	468 7	468 7	468 7
@ 35/ DH Load	MW net	554 7	554 7	554 7	554 7	554 7	525 9	525 9	525 9	525 9	525 9	525 9
@ 75/ DH Load	MW net	545 4	545 4	545 4	545 4	545 4	503 1	503 1	503 1	503 1	503 1	503 1
@ Full DH Load	MW net	512 0	512 0	512 0	512 0	512 0	470 1	470 1	470 1	470 1	470 1	470 1
TES 1 CHP Plant DH/HW Rating												
@ Full DH Load (hot water only)	Gcal/hr	740 0	740 0	740 0	740 0	740 0	656 4	656 4	811 4	811 4	811 4	811 4
@ Full DH Load (total DH incl process steam)	Gcal/hr	1 151 8	1 151 8	1 151 8	1 151 8	1 151 8	1 064 8	1 064 8	1 219 8	1 219 8	1 219 8	1 219 8
TES 1 HOBs												
DH Capability Hot Water												
Unit #1	Gcal/hr	100 0	100 0	100 0	100 0	100 0	100 0	100 0	100 0	100 0	100 0	100 0
Unit #2	Gcal/hr	100 0	100 0	100 0	100 0	100 0	100 0	100 0	100 0	100 0	100 0	100 0
Unit #3	Gcal/hr	100.0	100.0	100.0	100.0	100.0	100 0	100.0	100.0	100.0	100 0	100 0
Total	Gcal/hr	300 0	300 0	300 0	300 0	300 0	300 0	300 0	300 0	300 0	300 0	300 0
Boiler Efficiencies												
Unit #1	/	87 0%	87 0/	87 0/	87 0%	87 0/	87 0/	87 0/	87 0/	87 0/	87 0/	87 0/
Unit #2	/	87 0/	87 0/	87 0/	87 0/	87 0/	87 0/	87 0/	87 0/	87 0/	87 0/	87 0/
Unit #3	%	87.0%	87.0%	87.0%	87.0%	87.0%	87 0%	87.0%	87.0%	87.0%	87.0%	87.0%
Weighted average	/	87 0/	87 0/	87 0/	87 0%	87 0/	87 0/	87 0%	87 0%	87 0/	87 0/	87 0%
TES 2 HOBs												
DH Capability Hot Water												
Unit #1	Gcal/hr	96 0	96 0	96 0	96 0	96 0	96 0	96 0	96 0	96 0	96 0	96 0
Unit #2	Gcal/hr	96.0	96.0	96.0	96 0	96 0	96 0	96.0	96.0	96.0	96 0	96.0
Total	Gcal/hr	192 0	192 0	192 0	192 0	192 0	192 0	192 0	192 0	192 0	192 0	192 0
Boiler Efficiencies												
Unit #1	/	87 0/	87 0/	87 0/	87 0/	87 0/	87 0/	87 0/	87 0%	87 0%	87 0%	87 0/
Unit #2	%	87.0%	87 0%	87.0%	87 0%	87 0%	87 0%	87 0%	87 0%	87 0%	87 0/	87.0%
Weighted average	%	87 0/	87 0/	87 0/	87 0/	87 0/	87 0/	87 0/	87 0/	87 0/	87 0/	87 0%
Local DH System												
Frunze Unit #1	Gcal/hr	50 0	50 0	50 0	50 0	50 0	50 0	50 0	50 0	50 0	50 0	0 0
Frunze Unit #2	Gcal/hr	50 0	50 0	50 0	50 0	50 0	50 0	50 0	50 0	50 0	50 0	0 0
Frunze Unit #3	Gcal/hr	50 0	50 0	50 0	50 0	50 0	50 0	50 0	50 0	50 0	50 0	0 0
JAL Unit #1	Gcal/hr	20 0	20 0	20 0	20 0	20 0	20 0	20 0	20 0	20 0	20 0	20 0
JAL Unit #2	Gcal/hr	20.0	20 0	20 0	20 0	20 0	20 0	20.0	20 0	20 0	20 0	20 0
Total	Gcal/hr	190 0	190 0	190 0	190 0	190 0	190 0	190 0	190 0	190 0	190 0	40 0
Largest Unit	Gcal/hr	50 0	50 0	50 0	50 0	50 0	50 0	50 0	50 0	50 0	50 0	20 0
New capacity additions												
Mazut fired	Gcal/hr	0 0	0 0	0 0	0 0	0 0	0 0	0 0	0 0	**50 0**	0 0	0 0
Gas fired	Gcal/hr	0 0	0 0	0 0	0 0	0 0	0 0	0 0	0 0	0 0	0 0	**150 0**

Investment Schedules

Case Number 2 a DH Sensitivity

Summary of Investments

Study Year		1	2	3	4	5	6	7	8	9	10	11
Calendar Year		1995	1996	1997	1998	1999	2000	2001	2002	2003	2004	2005
Capital Expenditure Schedules												
Investment in Electric and Thermal Energy Supply												
Bishkek DH System												
TES 1 CHP Plant Rehabilitation	$000	0 0	0 0	0 0	0 0	0 0	0 0	0 0	0 0	0 0	0 0	0 0
Installation of new additional HOBs	$000	0 0	0 0	0 0	0 0	0 0	0 0	0 0	0 0	0 0	0 0	0 0
Local DH System												
Installation of new additional HOBs	$000	0 0	0 0	0 0	0 0	0 0	0 0	0 0	0 0	0 0	0 0	0 0
Bishkek Electric Supply												
New GTCC#1 75 MWe(net)	$000	0 0	0 0	0 0	0 0	0 0	0 0	0 0	0 0	0 0	0 0	0 0
New TG for TES 1 83 7 MWe(net)	$000	0 0	0 0	0 0	0 0	0 0	12 618 8	12 712 7	0 0	0 0	0 0	0 0
Investment in Electric Energy Transmission & Distribution System												
Ala Archa220/110kV 200 MW grid uprating	$000	0 0	0 0	0 0	0 0	0 0	0 0	0 0	0 0	0 0	0 0	0 0
Investment in District Heating Distribution System												
District heating system upgrades rehab and modernization	$000	0 0	2 897 5	14 786 4	8 912 6	3 149 6	0 0	0 0	0 0	0 0	0 0	0 0
District heating system ugrades extension of HW network	$000	0 0	0 0	0 0	0 0	0 0	7 183 6	0 0	0 0	0 0	0 0	0 0
Rehabilitation of Steam Distribution Network	$000	0 0	0 0	0 0	0 0	0 0	0 0	0 0	0 0	0 0	0 0	0 0
TOTAL ANNUAL CAPITAL EXPENDITURE	$000	0 0	2 897 5	14 786 4	8 912 6	3 149 6	19 802 3	12 712 7	0 0	0 0	0 0	0 0
Debt Service Schedules												
Investment in Electric and Thermal Energy Supply												
Bishkek DH System												
TES 1 CHP Plant Rehabilitation	$000	0 0	0 0	0 0	0 0	0 0	0 0	0 0	0 0	0 0	0 0	0 0
Installation of new additional HOBs	$000	0 0	0 0	0 0	0 0	0 0	0 0	0 0	0 0	0 0	0 0	0 0
Local DH System												
Installation of new additional HOBs	$000	0 0	0 0	0 0	0 0	0 0	0 0	0 0	0 0	0 0	0 0	0 0
Bishkek Electric Supply												
New GTCC#1 75 MWe(net)	$000	0 0	0 0	0 0	0 0	0 0	0 0	0 0	0 0	0 0	0 0	0 0
New TG for TES 1 83 7 MWe(net)	$000	0 0	0 0	0 0	0 0	0 0	0 0	0 0	5 321 4	5 321 4	5 321 4	5 321 4
Investment in Electric Energy Transmission & Distribution System												
Ala Archa220/110kV 200 MW grid uprating	$000	0 0	0 0	0 0	0 0	0 0	0 0	0 0	0 0	0 0	0 0	0 0
Investment in District Heating Distribution System												
District heating system upgrades rehab and modernization	$000	0 0	0 0	574 4	3 505 3	5 272 0	5 896 3	5 896 3	5 896 3	5 896 3	5 896 3	5 896 3
District heating system ugrades extension of HW network	$000	0 0	0 0	0 0	0 0	0 0	0 0	1 423 9	1 423 9	1 423 9	1 423 9	1 423 9
Rehabilitation of Steam Distribution Network	$000	0 0	0 0	0 0	0 0	0 0	0 0	0 0	0 0	0 0	0 0	0 0
TOTAL ANNUAL INVESTMENT COSTS	$000	0 0	0 0	574 4	3 505 3	5 272 0	5 896 3	7 320 3	12 641 7	12 641 7	12 641 7	12 641 7

Case 3a

Summary of Costs

Case Number 3 a DH Sensitivity

Study Year		1	2	3	4	5	6	7	8	9	10	11
Calendar Year		1995	1996	1997	1998	1999	2000	2001	2002	2003	2004	2005
Production Costs												
Primary Energy Expenses												
Coal	$000	43 185	58 560	61 195	61 471	61 518	62 966	64 191	65 427	66 526	67 873	69 232
Mazut	$000	3 272	1 372	1 434	1 440	1 441	1 475	1 504	1 533	1 559	1 590	1 622
Natural gas	$000	15 421	4 255	4 555	4 399	4 369	3 995	4 147	4 399	4 730	5 237	5 853
Grid Electric	$000	7	20	52	0	0	28	55	92	145	215	324
Total primary energy	$000	61 884	64 207	67 236	67 310	67 329	68 465	69 896	71 451	72 959	74 916	77 031
Operating and Maintenance Expenses												
Bishkek TES 1 CHP Plant	$000	11 000	12 342	13 904	13 767	15 184	16 713	16 287	17 933	19 748	21 786	23 787
Bishkek TES 1 and TES 2 HOBs	$000	304	358	375	316	273	157	122	92	67	59	55
Industrial steam distribution system	$000	144	160	178	199	223	252	274	299	327	357	390
District heating distribution system	$000	3 000	3 150	3 327	3 517	3 738	3 981	4 127	4 293	4 457	4 643	4 829
New GTCC plant	$000	0	0	0	0	0	0	0	0	0	0	0
Local DH system HOBs	$000	184	216	253	296	345	405	469	545	631	733	850
Total O&M	$000	14 632	16 226	18 036	18 096	19 763	21 507	21 279	23 163	25 230	27 577	29 911
Total Production Costs	$000	76 515	80 433	85 272	85 406	87 092	89 972	91 176	94 614	98 189	102 493	106 942
Investments												
TES 1 Rehabilitation and New HOBs	$000	0	0	16 579	5 038	0	0	0	0	0	0	0
New Self generation Capacity	$000	0	0	0	0	0	0	0	0	0	0	0
District Heating System Rehabilitation	$000	0	0	0	0	0	7 184	0	0	0	0	0
New HOBs for Local DH System	$000	0	0	0	0	0	0	830	848	2,600	2,660	0
Total Investment	$000	0	0	16 579	5 038	0	7 184	830	848	2 600	2 660	0
Total Annual Cost	$000	76 515	80 433	101 851	90 444	87 092	97 156	92 005	95 462	100 789	105 154	106 942

NPV of Costs		thru 2005	thru 2014
Primary energy expense	$000	403 014	521 006
O&M expense	$000	118,004	171,568
Subtotal production costs	$000	521 018	692 575
Investments	$000	21,153	21,153
Total Annual Costs	$000	542 172	713 728
End effect Adjustment	$000	(7,199)	(7,199)
Total Effective Cost	$000	534 973	706 529

Allocation of Costs **Case No** 3 a DH Sensitivity

Study Year		1	2	3	4	5	6	7	8	9	10	11
Calendar Year		1995	1996	1997	1998	1999	2000	2001	2002	2003	2004	2005
Production Costs												
Fuel and Primary Energy Expenses												
Electric Account												
Bishkek TES 1 CHP fuel	$000	33 171	33 941	34 965	35 352	35 896	36 968	38 177	39 418	40 341	41 714	43 102
New GTCC fuel	$000	0	0	0	0	0	0	0	0	0	0	0
Grid electric for electric loads	$000	7	20	52	0	0	27	54	91	143	212	320
Total primary energy	$000	33 178	33 961	35 016	35 352	35 896	36 996	38 231	39 509	40 484	41 926	43 422
District Heating Account												
Bishkek TES 1 CHP fuel	$000	20 374	20 900	21 426	21 401	21 051	21 475	21 530	21 562	21 731	21 727	21 716
Bishkek TES 1 and TES 2 HOBs fuel	$000	1 942	2 251	2 318	1 921	1 630	924	710	530	385	334	311
Local DH system HOBs fuel	$000	1 178	1 359	1 563	1 801	2 061	2 378	2 729	3 148	3 613	4 156	4 779
Grid electric for pumping power	$000	0	0	1	0	0	0	1	1	2	3	4
GTCC fuel for pumping power	$000	0	0	0	0	0	0	0	0	0	0	0
Bishkek TES 1 CHP fuel for pumping power	$000	524	541	555	547	542	546	552	559	562	572	583
Total primary energy	$000	24 017	25 052	25 863	25 670	25 285	25 324	25 523	25 801	26 292	26 792	27 394
Process Steam Account												
Bishkek TES 1 CHP fuel	$000	4 689	5 194	6 357	6 289	6 147	6 146	6 143	6 141	6 183	6 198	6 215
Operating and Maintenance Expenses												
Electric Account												
Bishkek TES 1 CHP Plant	$000	8 250	9 256	10 428	10 326	11 388	12 534	12 215	13 450	14 811	16 339	17 840
New GTCC	$000	0	0	0	0	0	0	0	0	0	0	0
Total O&M	$000	8 250	9 256	10 428	10 326	11 388	12 534	12 215	13 450	14 811	16 339	17 840
District Heating Account												
Bishkek TES 1 CHP Plant	$000	1 375	1 543	1 738	1 721	1 898	2 089	2 036	2 242	2 468	2 723	2 973
Bishkek TES 1 and TES 2 HOBs	$000	304	358	375	316	273	157	122	92	67	59	55
District heating distribution system	$000	3 000	3 150	3 327	3 517	3 738	3 981	4 127	4 293	4 457	4 643	4 829
Local DH system HOBs	$000	184	216	253	296	345	405	469	545	631	733	850
Total O&M	$000	4 863	5 267	5 693	5 850	6 254	6 632	6 754	7 172	7 624	8 158	8 708
Process Steam Account												
Bishkek TES 1 CHP Plant	$000	1 375	1 543	1 738	1 721	1 898	2 089	2 036	2 242	2 468	2 723	2 973
Process steam distribution system	$000	144	160	178	199	223	252	274	299	327	357	390
Total O&M	$000	1 519	1 703	1 916	1 920	2 121	2 341	2 310	2 541	2 795	3 080	3 363
Debt Service												
Electric Account												
TES 1 CHP Plant Rehabilitation	$000	0	0	0	2 465	3 214	3 214	3 214	3 214	3 214	3 214	3 214
New Self generating Capacity	$000	0	0	0	0	0	0	0	0	0	0	0
Ala Archa220/110kV 200 MW grid uprating	$000	0	0	0	0	0	0	0	0	0	0	0
Total	$000	0	0	0	2 465	3 214	3 214	3 214	3 214	3 214	3 214	3 214
District Heating Account												
TES 1 CHP Plant Rehabilitation	$000	0	0	0	411	536	536	536	536	536	536	536
New HOBs for Bishkek DH System	$000	0	0	0	0	0	0	0	0	0	0	0
New HOBs for Local DH System	$000	0	0	0	0	0	0	0	0	266	266	1 102
District Heating System Rehabilitation	$000	0	0	0	0	0	0	1,424	1,424	1,424	1,424	1 424
Total	$000	0	0	0	411	536	536	1 960	1 960	2 226	2 226	3 062
Process Steam Account												
TES 1 CHP Plant Rehabilitation	$000	0	0	0	411	536	536	536	536	536	536	536
Steam Distribution System Rehabilitation	$000	0	0	0	0	0	0	0	0	0	0	0
Total	$000	0	0	0	411	536	536	536	536	536	536	536

Partial Tariffs Case No 3 a DH Sensitivity

Study Year		1	2	3	4	5	6	7	8	9	10	11
Calendar Year		1995	1996	1997	1998	1999	2000	2001	2002	2003	2004	2005
Electric Account												
Total production costs	$000	41 428	43 217	45 444	45 677	47 284	49 530	50 446	52 959	55 295	58 265	61 262
Total carrying charges	$000	0	0	0	2,465	3,214	3,214	3,214	3,214	3,214	3,214	3,214
Total cost of service	$000	41 428	43 217	45 444	48 142	50 497	52 744	53 659	56 172	58 509	61 479	64 476
Total sales of electricity	GWh	1 352 0	1 409 6	1 459 4	1 500 3	1 542 4	1 585 7	1 630 1	1 675 8	1 722 6	1 770 6	1 819 8
Partial tariff production costs	cents/kWh	3 06	3 07	3 11	3 04	3 07	3 12	3 09	3 16	3 21	3 29	3 37
Partial tariff carrying charges	cents/kWh	0 00	0 00	0 00	0 16	0 21	0 20	0 20	0 19	0 19	0 18	0 18
Partial tariff all costs	cents/kWh	3 06	3 07	3 11	3 21	3 27	3 33	3 29	3 35	3 40	3 47	3 54
District Heating Account												
Total production costs	$000	28 880	30 319	31 555	31 520	31 539	31 956	32 276	32 973	33 916	34 950	36 102
Total carrying charges	$000	0	0	0	411	536	536	1,960	1,960	2,226	2,226	3,062
Total cost of service	$000	28 880	30 319	31 555	31 931	32 075	32 491	34 236	34 933	36 142	37 176	39 163
Total sales of district heat	Tcal	2 093 6	2 208 0	2 289 2	2 292 1	2 297 8	2 308 0	2 319 9	2 338 2	2 360 1	2 388 3	2 421 8
Partial tariff production costs	$/Gcal	13 79	13 73	13 78	13 75	13 73	13 85	13 91	14 10	14 37	14 63	14 91
Partial tariff carrying charges	$/Gcal	0.00	0.00	0.00	0.18	0.23	0.23	0.84	0.84	0.94	0.93	1.26
Partial tariff all costs	$/Gcal	13 79	13 73	13 78	13 93	13 96	14 08	14 76	14 94	15 31	15 57	16 17
Process Steam Account												
Total production costs	$000	6 208	6 896	8 273	8 209	8 269	8 487	8 454	8 682	8 978	9 278	9 578
Total carrying charges	$000	0	0	0	411	536	536	536	536	536	536	536
Total cost of service	$000	6 208	6 896	8 273	8 619	8 805	9 022	8 989	9 217	9 514	9 813	10 114
Total sales of process steam	Tcal	400 0	450 0	550 0	550 0	550 0	550 0	550 0	550 0	550 0	550 0	550 0
Partial tariff production costs	$/Gcal	15 52	15 33	15 04	14 92	15 03	15 43	15 37	15 78	16 32	16 87	17 41
Partial tariff carrying charges	$/Gcal	0.00	0.00	0.00	0.75	0.97	0.97	0.97	0.97	0.97	0.97	0.97
Partial tariff all costs	$/Gcal	15 52	15 33	15 04	15 67	16 01	16 40	16 34	16 76	17 30	17 84	18 39

Input Data and Assumptions

Case Number 3 a DH Sensitivity

Thermal Energy Supply Source	1	TES 1 + HOBs
Rehabilitate TES 1?	1	Yes
Electric Energy Supply Source	1	TES 1 + Grid Electric
Supplemental Electric Capacity	1	New GTCC
District Heating Scenario	0	Scenario No Project = No modernization no expansion only rehabilitation
Local DH supply by Bishkek DH?	0	No
When?	*199*	and beyond

Study Year			1	2	3	4	5	6	7	8	9	10	11
Calendar Year			1995	1996	1997	1998	1999	2000	2001	2002	2003	2004	2005
Thermal Energy													
District Heating													
Maximum Demand													
Existing customers	generation basis	Gcal/hr	900 0	935 0	950 0	924 0	897 0	870 0	850 0	826 0	802 0	778 0	754 0
New customers	generation basis	Gcal/hr	46.0	53.0	61.0	71.0	81.0	94 0	108.0	124.0	142.0	163.0	188.0
Total	generation basis	Gcal/hr	946 0	988 0	1 011 0	995 0	978 0	964 0	958 0	950 0	944 0	941 0	942 0
Disposition of energy													
Existing customers	sales basis	Tcal	2 000 0	2 100 0	2 165 0	2 149 0	2 134 0	2 119 0	2 103 0	2 088 0	2 073 0	2 058 0	2 042 0
New customers	generation basis	Tcal	104 0	120 0	138 0	159 0	182 0	210 0	241 0	278 0	319 0	367 0	422 0
Contingency Requirements (LU or 15%)													
Bishkek DH System	15 0%	Gcal/hr	135 0	140 3	142 5	155 0	155 0	155 0	155 0	155 0	155 0	155 0	155 0
Local DH System	15 0%	Gcal/hr	50 0	50 0	50 0	50 0	50 0	50 0	50 0	50 0	50 0	50 0	28 2
District heating pipe losses													
Bishkek DH system		%	25 01%	25 00%	24 51%	24 75%	24 99%	25 20%	25 45%	25 67%	25 91%	26 13%	26 41%
Local DH system		%	10 00%	10 00%	10 00%	10 00%	10 00%	10 00%	10 00%	10 00%	10 00%	10 00%	10 00%
DH pumping at booster stations		kWh/Gcal	7 70	7 70	7 70	7 70	7 70	7 70	7 70	7 70	7 70	7 70	7 70
CHP plant piping efficiency		%	96 0%										
Process Steam													
Energy	generation basis	Tcal	571 4	642 9	785 7	785 7	785 7	785 7	785 7	785 7	785 7	785 7	785 7
Piping losses		%	30 00%	30 00%	30 00%	30 00%	30 00%	30 00%	30 00%	30 00%	30 00%	30 00%	30 00%
Ratio of annual maximum demand to annual average demand			2 0										
Heat exchange efficiency steam > hot water		Gcal/hr/Gcal/hr	1 0										
Electric Energy			1995	1996	1997	1998	1999	2000	2001	2002	2003	2004	2005
Maximum Demand local customers	generation basis	MW	425 0	434 2	443 6	453 3	463 1	473 2	483 4	493 9	504 6	515 6	526 8
annual growth		%		2 2%	2 2%	2 2%	2 2%	2 2%	2 2%	2 2%	2 2%	2 2%	2 2%
Disposition of energy local customers	sales basis	GWh	1 002 0	1 052 0	1 094 0	1 127 0	1 161 0	1 196 0	1 232 0	1 269 0	1 307 0	1 346 0	1 386 0
annual growth		%		5 0%	4 0%	3 0%	3 0%	3 0%	3 0%	3 0%	3 0%	3 0%	3 0%
T&D losses		%	12 0%	12 0%	12 0%	11 0%	11 0%	11 0%	11 0%	11 0%	10 0%	10 0%	10 0%
Contingency requirement (LU or 15% max)	15 0%	MW	80 0	81 6	83 4	85 1	86 9	88 8	90 7	92 6	94 6	96 6	98 7
Grid capability		MW	200 0	200 0	200 0	200 0	200 0	200 0	200 0	200 0	200 0	200 0	200 0
	esc after 2005												
Grid electricity price forecast	0 0%	$/kWh	0 0300	0 0300	0 0300	0 0300	0 0300	0 0300	0 0300	0 0300	0 0300	0 0300	0 0300
GTCC unit addition block size		MW	75 0										
GTCC capability		MW	0 0	0 0	0 0	0 0	0 0	0 0	0 0	0 0	0 0	0 0	0 0
GTCC fuel cost		$/kWh	0 0189	0 0189	0 0189	0 0189	0 0189	0 0189	0 0189	0 0189	0 0189	0 0189	0 0189
GTCC annual average heat rate		kcal/kWh	2 008 1										
Maximum Demand transfers	generation basis	MW	100 0	102 2	104 4	106 7	109 0	111 3	113 7	116 2	118 7	121 3	123 9
annual growth		%		2 2%	2 2%	2 2%	2 2%	2 2%	2 2%	2 2%	2 2%	2 2%	2 2%
Disposition of energy transfers	sales basis	GWh	350 0	357 6	365 4	373 3	381 4	389 7	398 1	406 8	415 6	424 6	433 8
annual growth		%		2 2%	2 2%	2 2%	2 2%	2 2%	2 2%	2 2%	2 2%	2 2%	2 2%
Fuel Price Forecast	esc after 2005												
Coal	0 0%	$/Gcal	8 80	8 80	8 80	8 80	8 80	8 80	8 80	8 80	8 80	8 80	8 80
Mazut	0 0%	$/Gcal	10 00	10 00	10 00	10 00	10 00	10 00	10 00	10 00	10 00	10 00	10 00
Natural Gas	0 0%	$/Gcal	9 40	9 40	9 40	9 40	9 40	9 40	9 40	9 40	9 40	9 40	9 40

Fuel Mix for Supply Resources		1995	1996	1997	1998	1999	2000	2001	2002	2003	2004	2005
TES 1 CHP boilers												
Coal	%	75 0%	97 0%	97 0%	97 0%	97 0%	97 0%	97 0%	97 0%	97 0%	97 0%	97 0%
Mazut	%	5 0%	2 0%	2 0%	2 0%	2 0%	2 0%	2 0%	2 0%	2 0%	2 0%	2 0%
Natural Gas	%	20 0%	1 0%	1 0%	1 0%	1 0%	1 0%	1 0%	1 0%	1 0%	1 0%	1 0%
Weighted average fuel price	$/Gcal	8 98	8 83	8 83	8 83	8 83	8 83	8 83	8 83	8 83	8 83	8 83
Bishkek HOBs												
Coal	%	0 0%	0 0%	0 0%	0 0%	0 0%	0 0%	0 0%	0 0%	0 0%	0 0%	0 0%
Mazut	%	0 0%	0 0%	0 0%	0 0%	0 0%	0 0%	0 0%	0 0%	0 0%	0 0%	0 0%
Natural Gas	%	100 0%	100 0%	100 0%	100 0%	100 0%	100 0%	100 0%	100 0%	100 0%	100 0%	100 0%
Weighted average fuel price	$/Gcal	9 40	9 40	9 40	9 40	9 40	9 40	9 40	9 40	9 40	9 40	9 40
Local DH Boilers												
Coal	%	0 0%	0 0%	0 0%	0 0%	0 0%	0 0%	0 0%	0 0%	0 0%	0 0%	0 0%
Mazut	%	0 0%	0 0%	0 0%	0 0%	0 0%	0 0%	0 0%	0 0%	0 0%	0 0%	0 0%
Natural Gas	%	100 0%	100 0%	100 0%	100 0%	100 0%	100 0%	100 0%	100 0%	100 0%	100 0%	100 0%
Weighted average fuel price	$/Gcal	9 40	9 40	9 40	9 40	9 40	9 40	9 40	9 40	9 40	9 40	9 40

Boiler efficiencies		1995	1996	1997	1998	1999	2000	2001	2002	2003	2004	2005
Bishkek CHP boilers (TES 1)		87 5%	87 3%	87 1%	86 9%	88 5%	88 4%	88 3%	88 3%	88 2%	88 0%	87 8%
Bishkek HOBs (TES 1 and TES 2)	%	89 0%	89 0%	89 0%	89 0%	89 0%	89 0%	89 0%	89 0%	89 0%	89 0%	89 0%
Local HOBs (Frunze JAL)												
Coal	%	0 0%	0 0%	0 0%	0 0%	0 0%	0 0%	0 0%	0 0%	0 0%	0 0%	0 0%
Mazut	%	89 0%	89 0%	89 0%	89 0%	89 0%	89 0%	89 0%	89 0%	89 0%	89 0%	89 0%
Natural gas	%	83 0%	83 0%	83 0%	83 0%	83 0%	83 0%	83 0%	83 0%	83 0%	83 0%	83 0%
Weighted average	%	*83 0%*	*83 0%*	*83 0%*	*83 0%*	*83 0%*	*83 0%*	*83 0%*	*83 0%*	*83 0%*	*83 0%*	*83 0%*
Process steam generation	Gcal/hr add l heat input per Gcal/hr steam	0 63	0 63	0 63	0 63	0 62	0 62	0 62	0 62	0 62	0 63	0 63

Performance Degradation		
Annual change in boiler efficiency	%	-0 20%
Annual change in electric capability	%	0 10%

Fuel Allocation for Cogeneration Energy		
Methodology #A CHP advantage devoted to DH energy		
Electric power only production efficiency	%	30 0%
Methodology #B CHP advantage devoted to electric energy		
Distric heat only production efficiency	%	87 0%
Allocation Factors for TES 1 CHP Plant O&M and Investment		
% allocated to electric production	%	75 0%
% allocated to district heating production	%	12 5%
% allocated to process steam production	%	12 5%

Economic and Financial Parameters		1995 2000	2001 2014
Capital cost real escalation rates			
Western	%	0 00%	0 00%
Russian	%	0 00%	0 00%
Kyrgyz labor	%	16 90%	6 60%
Kyrgyz material	%	1 70%	0 90%
Kyrgyz equipment	%	1 50%	3 20%
Discount Rate for NPV Calculation	%	12 00%	
Physical contingencies + technical assistance & training	% of direct costs	12 50%	

Composite escalation factors	1995	1996	1997	1998	1999	2000	2001	2002	2003	2004	2005
Western	1 000	1 000	1 000	1 000	1 000	1 000	1 000	1 000	1 000	1 000	1 000
Russian	1 000	1 000	1 000	1 000	1 000	1 000	1 000	1 000	1 000	1 000	1 000
Kyrgyz labor	1 000	1 169	1 367	1 598	1 867	2 183	2 327	2 481	2 645	2 819	3 005
Kyrgyz material	1 000	1 017	1 034	1 052	1 070	1 088	1 098	1 108	1 118	1 128	1 138
Kyrgyz equipment	1 000	1 015	1 030	1 046	1 061	1 077	1 112	1 147	1 184	1 222	1 261

Load Fore

Case Number 3 a DH Sensitivity

Load Forecast Development

Study Year		1	2	3	4	5	6	7	8	9	10	11
Calendar Year		1995	1996	1997	1998	1999	2000	2001	2002	2003	2004	2005
District heating pipe losses												
Bishkek DH system	%	25 01/	25 00%	24 51%	24 75/	24 99%	25 20%	25 45/	25 67/	25 91/	26 13%	26 41/
Local DH system	/	10 00%	10 00/	10 00/	10 00%	10 00%	10 00/	10 00%	10 00%	10 00/	10 00/	10 00%
T&D losses (in Bishkek)	/	12 0%	12 0%	12 0%	11 0%	11 0/	11 0%	11 0/	11 0/	10 0%	10 0%	10 0/
Thermal Energy												
Bishkek DH System Hot Water												
Maximum Demand (generation basis)												
Existing customers	Gcal/hr	900 0	935 0	950 0	924 0	897 0	870 0	850 0	826 0	802 0	778 0	754 0
New customers	Gcal/hr	0.0	0.0	0.0	0.0	0.0	0.0	0.0	0.0	0.0	0.0	0.0
Total Maximum Demand	*Gcal/hr*	*900 0*	*935 0*	*950 0*	*924 0*	*897 0*	*870 0*	*850 0*	*826 0*	*802 0*	*778 0*	*754 0*
Disposition of Energy												
Existing customers	Tcal	2 000 0	2 100 0	2 165 0	2 149 0	2 134 0	2 119 0	2 103 0	2 088 0	2 073 0	2 058 0	2 042 0
New customers	Tcal	0.0	0.0	0.0	0.0	0.0	0.0	0.0	0.0	0.0	0.0	0.0
Total (sales basis)	Tcal	2 000 0	2 100 0	2 165 0	2 149 0	2 134 0	2 119 0	2 103 0	2 088 0	2 073 0	2 058 0	2 042 0
Distribution losses												
Existing customers	Tcal	667 0	700 0	702 9	706 8	711 0	713 9	717 9	721 1	724 9	728 0	732 8
New customers	Tcal	0.0	0.0	0.0	0.0	0.0	0.0	0.0	0.0	0.0	0.0	0.0
Total Disposition of Energy	*Tcal*	*2 667 0*	*2 800 0*	*2 867 9*	*2 855 8*	*2 845 0*	*2 832 9*	*2 820 9*	*2 809 1*	*2 797 9*	*2 786 0*	*2 774 8*
Bishkek DH System Process Steam												
Energy generation basis	Tcal	571 4	642 9	785 7	785 7	785 7	785 7	785 7	785 7	785 7	785 7	785 7
Energy sales basis	Tcal	400 0	450 0	550 0	550 0	550 0	550 0	550 0	550 0	550 0	550 0	550 0
Local DH System Hot Water												
Maximum Demand (generation basis)	Gcal/hr	46 0	53 0	61 0	71 0	81 0	94 0	108 0	124 0	142 0	163 0	188 0
Disposition of Energy												
Existing customers	Tcal	93 6	108 0	124 2	143 1	163 8	189 0	216 9	250 2	287 1	330 3	379 8
Distribution losses	Tcal	10.4	12 0	13.8	15.9	18.2	21.0	24.1	27.8	31.9	36.7	42.2
Total Disposition of Energy	*Tcal*	104 0	120 0	138 0	159 0	182 0	210 0	241 0	278 0	319 0	367 0	422 0
Electric Energy												
Maximum Demand (generation basis)												
Local customers	MW	425 0	434 2	443 6	453 3	463 1	473 2	483 4	493 9	504 6	515 6	526 8
Transfers	MW	100 0	102 2	104 4	106 7	109 0	111 3	113 7	116 2	118 7	121 3	123 9
DH pumping power	MW	7.3	7.6	7.8	7.7	7.5	7.4	7.4	7.3	7.3	7.2	7.3
Total Maximum Demand	*MW*	*532 3*	*544 0*	*555 8*	*567 6*	*579 6*	*591 9*	*604 5*	*617 4*	*630 6*	*644 1*	*658 0*
Disposition of Energy												
Local customers (sales basis)	GWh	1 002 0	1 052 0	1 094 0	1 127 0	1 161 0	1 196 0	1 232 0	1 269 0	1 307 0	1 346 0	1 386 0
Transfers	GWh	350 0	357 6	365 4	373 3	381 4	389 7	398 1	406 8	415 6	424 6	433 8
DH pumping power	GWh	21 3	22 5	23.1	23 2	23.3	23.4	23.6	23.8	24 0	24.3	24 6
Total consumption	GWh	1 373 3	1 432 1	1 482 5	1 523 5	1 565 7	1 609 1	1 653 7	1 699 5	1 746 6	1 794 9	1 844 4
T&D losses	GWh	187.3	195.3	202.2	188.3	193.5	198.9	204.4	210.1	194.1	199.4	204.9
Total Disposition of Energy	*GWh*	*1 560 6*	*1 627 4*	*1 684 7*	*1 711 8*	*1 759 2*	*1 808 0*	*1 858 1*	*1 909 6*	*1 940 6*	*1 994 3*	*2 049 4*

Summary of Load Forecasts (generation basis)

Calendar Year		1995	1996	1997	1998	1999	2000	2001	2002	2003	2004	2005
Thermal Load to be Served by Bishkek DH System												
Maximum Demand Hot Water	Gcal/hr	900 0	935 0	950 0	924 0	897 0	870 0	850 0	826 0	802 0	778 0	754 0
Thermal Energy Hot Water	Tcal	2 667 0	2 800 0	2 867 9	2 855 8	2 845 0	2 832 9	2 820 9	2 809 1	2 797 9	2 786 0	2 774 8
Maximum Demand Process Steam	Gcal/hr	130 5	146 8	179 4	179 4	179 4	179 4	179 4	179 4	179 4	179 4	179 4
Thermal Energy Process Steam	Tcal	571 4	642 9	785 7	785 7	785 7	785 7	785 7	785 7	785 7	785 7	785 7
Thermal Load to be Served by Local DH System												
Maximum Demand Hot Water	Gcal/hr	46 0	53 0	61 0	71 0	81 0	94 0	108 0	124 0	142 0	163 0	188 0
Thermal Energy Hot Water	Tcal	104 0	120 0	138 0	159 0	182 0	210 0	241 0	278 0	319 0	367 0	422 0
Maximum Demand Process Steam	Gcal/hr	0 0	0 0	0 0	0 0	0 0	0 0	0 0	0 0	0 0	0 0	0 0
Thermal Energy Process Steam	Tcal	0 0	0 0	0 0	0 0	0 0	0 0	0 0	0 0	0 0	0 0	0 0
Total Thermal Load to be Served												
Maximum Demand Hot Water	Gcal/hr	946 0	988 0	1 011 0	995 0	978 0	964 0	958 0	950 0	944 0	941 0	942 0
Thermal Energy Hot Water	Tcal	2 771 0	2 920 0	3 005 9	3 014 8	3 027 0	3 042 9	3 061 9	3 087 1	3 116 9	3 153 0	3 196 8
Maximum Demand Process Steam	Gcal/hr	130 5	146 8	179 4	179 4	179 4	179 4	179 4	179 4	179 4	179 4	179 4
Thermal Energy Process Steam	Tcal	571 4	642 9	785 7	785 7	785 7	785 7	785 7	785 7	785 7	785 7	785 7
Total Electric Load Forecast												
Maximum Demand	MW	532 3	544 0	555 8	567 6	579 6	591 9	604 5	617 4	630 6	644 1	658 0
Electric Energy	GWh	1,560 6	1,627 4	1,684 7	1,711 8	1,759 2	1,808 0	1,858 1	1,909 6	1,940 6	1,994 3	2,049 4

Load/Capacity Balance

Case No 3 a DH Sensitivity

Study Year		1	2	3	4	5	6	7	8	9	10	11
Calendar Year		1995	1996	1997	1998	1999	2000	2001	2002	2003	2004	2005
Electric Energy												
Maximum Demand	MW	532 3	544 0	555 8	567 6	579 6	591 9	604 5	617 4	630 6	644 1	658 0
Existing capacity resources												
TES 1 CHP Plant	MW	550 5	549 9	549 4	549 4	633 1	591 4	591 4	591 4	590 8	590 2	589 6
Grid electric capacity	MW	200 0	200 0	200 0	200 0	200 0	200 0	200 0	200 0	200 0	200 0	200 0
GTCC	MW	0.0	0.0	0.0	0.0	0.0	0.0	0 0	0.0	0.0	0.0	0.0
Total capacity resources before additions	MW	750 5	749 9	749 4	749 4	833 1	791 4	791 4	791 4	790 8	790 2	789 6
/ reserve before capacity additions	%	41 0%	37 9%	34 8%	32 0%	43 7%	33 7%	30 9%	28 2%	25 4%	22 7%	20 0%
Capacity resources required	MW	612 3	625 6	639 2	652 7	666 5	680 7	695 2	710 1	725 2	740 8	756 7
Additional capacity required (minimum)	MW	0 0	0 0	0 0	0 0	0 0	0 0	0 0	0 0	0 0	0 0	0 0
Capacity additions/retirements												
TES 1 CHP Rehabilitation (install TG11 or equiv)	MW	0 0	0 0	0 0	83 7	0 0	0 0	0 0	0 0	0 0	0 0	0 0
TES 1 CHP Retirement of Unit 1 and 2	MW	0 0	0 0	0 0	0 0	(41 7)	0 0	0 0	0 0	0 0	0 0	0 0
Grid electric capacity additions	MW	0 0	0 0	0 0	0 0	0 0	0 0	0 0	0 0	0 0	0 0	0 0
GTCC capacity additions	MW	0 0	0 0	0 0	0 0	0 0	0 0	0 0	0 0	0 0	0 0	0 0
Total capacity resources after additions	MW	750 5	749 9	749 4	833 1	833 1	791 4	791 4	791 4	790 8	790 2	789 6
% reserve after capacity additions	%	41 0%	37 9%	34 8%	46 8%	43 7%	33 7%	30 9%	28 2%	25 4%	22 7%	20 0%
Thermal Energy - Hot Water												
Bishkek DH System												
Maximum Demand	Gcal/hr	900 0	935 0	950 0	924 0	897 0	870 0	850 0	826 0	802 0	778 0	754 0
Existing capacity resources												
TES 1 CHP Plant												
nominal HW capacity	Gcal/hr	740 0	740 0	740 0	895 0	895 0	811 4	811 4	811 4	811 4	811 4	811 4
peaking HW capacity	Gcal/hr	281.3	265.0	232.4	232.4	232.4	229.0	229.0	229.0	229.0	229.0	229.0
total	Gcal/hr	1 021 3	1 005 0	972 4	1 127 4	1 127 4	1 040 4	1 040 4	1 040 4	1 040 4	1 040 4	1 040 4
TES 1HOBs	Gcal/hr	300 0	300 0	300 0	300 0	300 0	300 0	300 0	300 0	300 0	300 0	300 0
TES 2 HOBs	Gcal/hr	192 0	192 0	192 0	192 0	192 0	192 0	192 0	192 0	192 0	192 0	192 0
Existing HOBs Frunze	Gcal/hr	0 0	0 0	0 0	0 0	0 0	0 0	0 0	0 0	0 0	0 0	0 0
Existing HOBs JAL	Gcal/hr	0 0	0 0	0 0	0 0	0 0	0 0	0 0	0 0	0 0	0 0	0 0
New HOBs in local DH system	Gcal/hr	0.0	0.0	0.0	0.0	0.0	0.0	0.0	0.0	0.0	0.0	0.0
Total capacity resources before additions	Gcal/hr	1 513 3	1 497 0	1 464 4	1 619 4	1 619 4	1 532 4	1 532 4	1 532 4	1 532 4	1 532 4	1 532 4
% reserve before capacity additions	%	68 1%	60 1%	54 1%	75 3%	80 5%	76 1%	80 3%	85 5%	91 1%	97 0%	103 2%
Capacity resources required	Gcal/hr	1 035 0	1 075 3	1 092 5	1 079 0	1 052 0	1 025 0	1 005 0	981 0	957 0	933 0	909 0
Additional capacity required (minimum)	Gcal/hr	0 0	0 0	0 0	0 0	0 0	0 0	0 0	0 0	0 0	0 0	0 0
Capacity additions/retirements												
New HOB capacity	Gcal/hr	0 0	0 0	0 0	0 0	0 0	0 0	0 0	0 0	0 0	0 0	0 0
Total capacity resources after additions	Gcal/hr	1 513 3	1 497 0	1 464 4	1 619 4	1 619 4	1 532 4	1 532 4	1 532 4	1 532 4	1 532 4	1 532 4
% reserve after capacity additions	%	68 1%	60 1%	54 1%	75 3%	80 5%	76 1%	80 3%	85 5%	91 1%	97 0%	103 2%
Local DH System												
Maximum Demand	Gcal/hr	46 0	53 0	61 0	71 0	81 0	94 0	108 0	124 0	142 0	163 0	188 0
Existing capacity resources												
Existing HOBs Frunze	Gcal/hr	150 0	150 0	150 0	150 0	150 0	150 0	150 0	150 0	150 0	150 0	0 0
Existing HOBs JAL	Gcal/hr	40 0	40 0	40 0	40 0	40 0	40 0	40 0	40 0	40 0	40 0	40 0
New HOBs capacity additions	Gcal/hr	0.0	0 0	0.0	0.0	0.0	0.0	0.0	0.0	0.0	50.0	50.0
Total capacity resources before additions	Gcal/hr	190 0	190 0	190 0	190 0	190 0	190 0	190 0	190 0	190 0	240 0	90 0
% reserve before capacity additions	%	313 0%	258 5%	211 5%	167 6%	134 6%	102 1%	75 9%	53 2%	33 8%	47 2%	52 1%
Capacity resources required	Gcal/hr	96 0	103 0	111 0	121 0	131 0	144 0	158 0	174 0	192 0	213 0	216 2
Additional capacity required (minimum)	Gcal/hr	0 0	0 0	0 0	0 0	0 0	0 0	0 0	0 0	2 0	0 0	126 2
Capacity additions/retirements												
New HOB capacity	Gcal/hr	0 0	0 0	0 0	0 0	0 0	0 0	0 0	0 0	50 0	0 0	150 0
Frunze boiler retirements	Gcal/hr	0 0	0 0	0.0	0.0	0.0	0.0	0 0	0 0	0.0	(150 0)	0 0
Total capacity resources after additions	Gcal/hr	190 0	190 0	190 0	190 0	190 0	190 0	190 0	190 0	240 0	240 0	240 0
% reserve after capacity additions	%	313 0%	258 5%	211 5%	167 6%	134 6%	102 1%	75 9%	53 2%	69 0%	47 2%	27 7%
Thermal Energy - Process Steam												
Maximum Demand	Gcal/hr	130 5	146 8	179 4	179 4	179 4	179 4	179 4	179 4	179 4	179 4	179 4
Existing capacity resources (TES 1 CHP)	Gcal/hr	411 8	411 8	411 8	411 8	411 8	408 4	408 4	408 4	408 4	408 4	408 4
% reserve	%	215 6%	180 6%	129 6%	129 6%	129 6%	127 7%	127 7%	127 7%	127 7%	127 7%	127 7%

413

Energy Production/Fuel Consumption Summary

Case Number 3 a DH Sensitivity

Study Year		1	2	3	4	5	6	7	8	9	10	11
Calendar Year		1995	1996	1997	1998	1999	2000	2001	2002	2003	2004	2005
Energy Production												
Electric Energy Generation												
Bishkek CHP Plant (TES 1)	GWh	1 560 4	1 626 7	1 682 9	1 711 8	1 759 2	1 807 0	1 856 3	1 906 5	1 935 8	1 987 1	2 038 6
Grid electric	GWh	0 2	0 7	1 7	0 0	0 0	0 9	1 8	3 1	4 8	7 2	10 8
GTCC	GWh	0.0	0.0	0.0	0.0	0.0	0.0	0.0	0.0	0.0	0.0	0.0
Total	GWh	1 560 6	1 627 4	1 684 7	1 711 8	1 759 2	1 808 0	1 858 1	1 909 6	1 940 6	1 994 3	2 049 4
Thermal Energy Generation												
Distric heating (heat, hot water)												
Bishkek CHP Plant (TES 1)	Tcal	2 483 2	2 586 9	2 648 5	2 673 9	2 690 6	2 745 4	2 753 7	2 758 9	2 761 5	2 754 4	2 745 4
Bishkek HOBs (TES 1 and TES 2)	Tcal	183 9	213 1	219 5	181 9	154 3	87 5	67 3	50 2	36 4	31 6	29 5
Local DH System HOBs	Tcal	104.0	120.0	138.0	159.0	182.0	210.0	241.0	278.0	319.0	367.0	422.0
Total	Tcal	2 771 0	2 920 0	3 005 9	3 014 8	3 027 0	3 042 9	3 061 9	3 087 1	3 116 9	3 153 0	3 196 8
Process steam												
Bishkek DH system (TES 1)	Tcal	571 4	642 9	785 7	785 7	785 7	785 7	785 7	785 7	785 7	785 7	785 7
Fuel Consumption												
Bishkek DH System												
Coal	Tcal	4 907 4	6 654 5	6 953 9	6 985 4	6 990 7	7 155 3	7 294 4	7 434 8	7 559 7	7 712 8	7 867 3
Mazut	Tcal	327 2	137 2	143 4	144 0	144 1	147 5	150 4	153 3	155 9	159 0	162 2
Natural gas	Tcal	1,515.2	308.1	318.3	276.4	245.5	172.0	150.8	133.1	118.9	115.0	114.2
Total	Tcal	6 749 7	7 099 8	7 415 6	7 405 8	7 380 3	7 474 8	7 595 6	7 721 2	7 834 5	7 986 9	8 143 7
Local DH System												
Coal	Tcal	0 0	0 0	0 0	0 0	0 0	0 0	0 0	0 0	0 0	0 0	0 0
Mazut	Tcal	0 0	0 0	0 0	0 0	0 0	0 0	0 0	0 0	0 0	0 0	0 0
Natural gas	Tcal	125.3	144.6	166.3	191.6	219.3	253.0	290.4	334.9	384.3	442.2	508.4
Total	Tcal	125 3	144 6	166 3	191 6	219 3	253 0	290 4	334 9	384 3	442 2	508 4
GTCC natural gas	Tcal	0 0	0 0	0 0	0 0	0 0	0 0	0 0	0 0	0 0	0 0	0 0
Total Fuel Consumption	Tcal	6 875 0	7 244 4	7 581 9	7 597 3	7 599 6	7 727 8	7 886 0	8 056 1	8 218 8	8 429 0	8 652 1
/ by type												
Coal	/	71 4%	91 9%	91 7%	91 9%	92 0%	92 6%	92 5%	92 3%	92 0%	91 5%	90 9%
Mazut	%	4 8%	1 9%	1 9%	1 9%	1 9%	1 9%	1 9%	1 9%	1 9%	1 9%	1 9%
Natural gas	%	23.9%	6.2%	6.4%	6.2%	6.1%	5.5%	5.6%	5.8%	6.1%	6.6%	7.2%
Total	%	100 0%	100 0%	100 0%	100 0%	100 0%	100 0%	100 0%	100 0%	100 0%	100 0%	100 0%

Generating Resource Characteristics

Case Number 3 a DH Sensitivity

Study Year			1	2	3	4	5	6	7	8	9	10	11
Calendar Year			1995	1996	1997	1998	1999	2000	2001	2002	2003	2004	2005
TES-1 CHP Plant			1995	1996	1997	1998	1999	2000	2001	2002	2003	2004	2005
Electric Capability													
Unit #1		MW	35 0	35 0	35 0	35 0	35 0	0 0	0 0	0 0	0 0	0 0	0 0
Unit #2		MW	25 0	25 0	25 0	25 0	25 0	0 0	0 0	0 0	0 0	0 0	0 0
Unit #3		MW	50 0	50 0	50 0	50 0	50 0	50 0	50 0	50 0	50 0	50 0	50 0
Unit #4		MW	35 0	35 0	35 0	35 0	35 0	35 0	35 0	35 0	35 0	35 0	35 0
Unit #5		MW	35 0	35 0	35 0	35 0	35 0	35 0	35 0	35 0	35 0	35 0	35 0
Unit #6		MW	86 0	86 0	86 0	86 0	86 0	86 0	86 0	86 0	86 0	86 0	86 0
Unit #7		MW	60 0	60 0	60 0	60 0	60 0	60 0	60 0	60 0	60 0	60 0	60 0
Unit #8		MW	60 0	60 0	60 0	60 0	60 0	60 0	60 0	60 0	60 0	60 0	60 0
Unit #9		MW	86 0	86 0	86 0	86 0	86 0	86 0	86 0	86 0	86 0	86 0	86 0
Unit #10		MW	86 0	86 0	86 0	86 0	86 0	86 0	86 0	86 0	86 0	86 0	86 0
Unit #11	0	MW	0.0	0.0	0.0	90.0	90.0	90.0	90.0	90.0	90.0	90.0	90.0
Total		MW	558 0	558 0	558 0	648 0	648 0	588 0	588 0	588 0	588 0	588 0	588 0
Largest Unit		MW	86 0	86 0	86 0	90 0	90 0	90 0	90 0	90 0	90 0	90 0	90 0
		MW net	80 0	80 0	80 0	83 7	83 7	83 7	83 7	83 7	83 7	83 7	83 7
DH Capability Hot Water													
Unit #1		Gcal/hr	35 0	35 0	35 0	35 0	35 0	0 0	0 0	0 0	0 0	0 0	0 0
Unit #2		Gcal/hr	48 6	48 6	48 6	48 6	48 6	0 0	0 0	0 0	0 0	0 0	0 0
Unit #3		Gcal/hr	51 0	51 0	51 0	51 0	51 0	51 0	51 0	51 0	51 0	51 0	51 0
Unit #4		Gcal/hr	97 0	97 0	97 0	97 0	97 0	97 0	97 0	97 0	97 0	97 0	97 0
Unit #5		Gcal/hr	97 0	97 0	97 0	97 0	97 0	97 0	97 0	97 0	97 0	97 0	97 0
Unit #6		Gcal/hr	102 6	102 6	102 6	102 6	102 6	102 6	102 6	102 6	102 6	102 6	102 6
Unit #7		Gcal/hr	61 0	61 0	61 0	61 0	61 0	61 0	61 0	61 0	61 0	61 0	61 0
Unit #8		Gcal/hr	61 0	61 0	61 0	61 0	61 0	61 0	61 0	61 0	61 0	61 0	61 0
Unit #9		Gcal/hr	102 6	102 6	102 6	102 6	102 6	102 6	102 6	102 6	102 6	102 6	102 6
Unit #10		Gcal/hr	103 0	103 0	103 0	103 0	103 0	103 0	103 0	103 0	103 0	103 0	103 0
Unit #11		Gcal/hr	0.0	0.0	0.0	155.0	155.0	155.0	155.0	155.0	155.0	155.0	155.0
Total		Gcal/hr	758 8	758 8	758 8	913 8	913 8	830 2	830 2	830 2	830 2	830 2	830 2
Largest Unit		Gcal/hr	103 0	103 0	103 0	155 0	155 0	155 0	155 0	155 0	155 0	155 0	155 0
Boiler Efficiencies			1999	2003									
w/o Rehabilitation		%	87 5%										
w/Rehabilitation		%	89 5%										
Boiler #14		%	87 5%	87 3%	87 1%	86 9%	89 5%	89 5%	89 5%	89 5%	89 5%	89 3%	89 1%
Boiler #15		%	87 5%	87 3%	87 1%	86 9%	89 5%	89 5%	89 5%	89 5%	89 5%	89 3%	89 1%
Boiler #16		%	87 5%	87 3%	87 1%	86 9%	89 5%	89 5%	89 5%	89 5%	89 5%	89 3%	89 1%
Boiler #17		%	87 5%	87 3%	87 1%	86 9%	89 5%	89 5%	89 5%	89 5%	89 5%	89 3%	89 1%
Boiler #18		%	87 5%	87 3%	87 1%	86 9%	89 5%	89 5%	89 5%	89 5%	89 5%	89 3%	89 1%
Boiler #19		%	87 5%	87 3%	87 1%	86 9%	89 5%	89 5%	89 5%	89 5%	89 5%	89 3%	89 1%
Boiler #20		%	87 5%	87 3%	87 1%	86 9%	89 5%	89 5%	89 5%	89 5%	89 5%	89 3%	89 1%
Boiler #21		%	87 5%	87 3%	87 1%	86 9%	86 7%	86 5%	86 3%	86 1%	85 9%	85 7%	85 5%
Boiler #22		%	87 5%	87 3%	87 1%	86 9%	86 7%	86 5%	86 3%	86 1%	85 9%	85 7%	85 5%
Boiler #23		%	87 5%	87 3%	87 1%	86 9%	86 7%	86 5%	86 3%	86 1%	85 9%	85 7%	85 5%
Boiler #24		%	87 5%	87.3%	87.1%	86.9%	86.7%	86.5%	86.3%	86 1%	85 9%	85 7%	85 5%
Weighted average		%	87 5%	87 3%	87 1%	86 9%	88 5%	88 4%	88 3%	88 3%	88 2%	88 0%	87 8%

Calendar year		1995	1996	1997	1998	1999	2000	2001	2002	2003	2004	2005
TES 1 CHP Plant Electrical Rating w/o Rehabilitation												
@ Zero DH Load	MW gross	504 0	504 0	504 0	504 0	504 0	504 0	504 0	504 0	504 0	504 0	504 0
@ 35/ DH Load	MW gross	596 5	596 5	596 5	596 5	596 5	565 5	565 5	565 5	565 5	565 5	565 5
@ 75/ DH Load	MW gross	586 5	586 5	586 5	586 5	586 5	541 0	541 0	541 0	541 0	541 0	541 0
@ Full DH Load	MW gross	550 5	550 5	550 5	550 5	550 5	505 5	505 5	505 5	505 5	505 5	505 5
Change in TES 1 Electrical Rating w/ Rehabilitation												
@ Zero DH Load	MW gross	0 0	0 0	0 0	75 0	0 0	0 0	0 0	0 0	0 0	0 0	0 0
@ 35/ DH Load	MW gross	0 0	0 0	0 0	54 0	0 0	0 0	0 0	0 0	0 0	0 0	0 0
@ 75/ DH Load	MW gross	0 0	0 0	0 0	99 4	0 0	0 0	0 0	0 0	0 0	0 0	0 0
@ Full DH Load	MW gross	0 0	0 0	0 0	90 0	0 0	0 0	0 0	0 0	0 0	0 0	0 0
TES 1 CHP Plant Electrical Rating w/ Rehabilitation												
@ Zero DH Load	MW gross	504 0	504 0	504 0	579 0	579 0	579 0	579 0	579 0	579 0	579 0	579 0
@ 35/ DH Load	MW gross	596 5	596 5	596 5	650 5	650 5	619 5	619 5	619 5	619 5	619 5	619 5
@ 75% DH Load	MW gross	586 5	586 5	586 5	685 9	685 9	640 4	640 4	640 4	640 4	640 4	640 4
@ Full DH Load	MW gross	550 5	550 5	550 5	640 5	640 5	595 5	595 5	595 5	595 5	595 5	595 5
Auxiliary power consumption	/	7 0%	7 0%	7 0%	7 0%	7 0%	7 0%	7 0%	7 0%	7 0%	7 0%	7 0%
@ Zero DH Load	MW net	468 7	468 7	468 7	538 5	538 5	538 5	538 5	538 5	538 5	538 5	538 5
@ 35/ DH Load	MW net	554 7	554 7	554 7	605 0	605 0	576 1	576 1	576 1	576 1	576 1	576 1
@ 75/ DH Load	MW net	545 4	545 4	545 4	637 9	637 9	595 6	595 6	595 6	595 6	595 6	595 6
@ Full DH Load	MW net	512 0	512 0	512 0	595 7	595 7	553 8	553 8	553 8	553 8	553 8	553 8
TES 1 CHP Plant DH/HW Rating												
@ Full DH Load (hot water only)	Gcal/hr	740 0	740 0	740 0	895 0	895 0	811 4	811 4	811 4	811 4	811 4	811 4
@ Full DH Load (total DH incl process steam)	Gcal/hr	1 151 8	1 151 8	1 151 8	1 306 8	1 306 8	1 219 8	1 219 8	1 219 8	1 219 8	1 219 8	1 219 8
TES-1 HOBs												
DH Capability Hot Water												
Unit #1	Gcal/hr	100 0	100 0	100 0	100 0	100 0	100 0	100 0	100 0	100 0	100 0	100 0
Unit #2	Gcal/hr	100 0	100 0	100 0	100 0	100 0	100 0	100 0	100 0	100 0	100 0	100 0
Unit #3	Gcal/hr	100 0	100 0	100 0	100 0	100 0	100 0	100 0	100 0	100 0	100 0	100 0
Total	Gcal/hr	300 0	300 0	300 0	300 0	300 0	300 0	300 0	300 0	300 0	300 0	300 0
Boiler Efficiencies												
Unit #1	/	87 0%	87 0%	87 0%	87 0%	87 0%	87 0/	87 0%	87 0%	87 0%	87 0%	87 0%
Unit #2	%	87 0%	87 0%	87 0%	87 0%	87 0%	87 0%	87 0%	87 0%	87 0%	87 0%	87 0%
Unit #3	%	87 0%	87 0%	87 0%	87 0%	87 0%	87 0%	87 0%	87 0%	87 0%	87 0%	87 0%
Weighted average	%	87 0%	87 0%	87 0%	87 0%	87 0%	87 0/	87 0/	87 0%	87 0%	87 0%	87 0%
TES-2 HOBs												
DH Capability Hot Water												
Unit #1	Gcal/hr	96 0	96 0	96 0	96 0	96 0	96 0	96 0	96 0	96 0	96 0	96 0
Unit #2	Gcal/hr	96 0	96 0	96 0	96 0	96 0	96 0	96 0	96 0	96 0	96 0	96 0
Total	Gcal/hr	192 0	192 0	192 0	192 0	192 0	192 0	192 0	192 0	192 0	192 0	192 0
Boiler Efficiencies												
Unit #1	%	87 0%	87 0%	87 0%	87 0%	87 0%	87 0%	87 0%	87 0%	87 0%	87 0%	87 0%
Unit #2	%	87 0%	87 0%	87 0%	87 0%	87 0%	87 0%	87 0%	87 0%	87 0%	87 0%	87 0%
Weighted average	/	87 0%	87 0%	87 0%	87 0%	87 0%	87 0%	87 0%	87 0%	87 0%	87 0%	87 0%
Local DH System												
Frunze Unit #1	Gcal/hr	50 0	50 0	50 0	50 0	50 0	50 0	50 0	50 0	50 0	50 0	0 0
Frunze Unit #2	Gcal/hr	50 0	50 0	50 0	50 0	50 0	50 0	50 0	50 0	50 0	50 0	0 0
Frunze Unit #3	Gcal/hr	50 0	50 0	50 0	50 0	50 0	50 0	50 0	50 0	50 0	50 0	0 0
JAL Unit #1	Gcal/hr	20 0	20 0	20 0	20 0	20 0	20 0	20 0	20 0	20 0	20 0	20 0
JAL Unit #2	Gcal/hr	20 0	20 0	20 0	20 0	20 0	20 0	20 0	20 0	20 0	20 0	20 0
Total	Gcal/hr	190 0	190 0	190 0	190 0	190 0	190 0	190 0	190 0	190 0	190 0	40 0
Largest Unit	Gcal/hr	50 0	50 0	50 0	50 0	50 0	50 0	50 0	50 0	50 0	50 0	20 0
New capacity additions												
Mazut fired	Gcal/hr	0 0	0 0	0 0	0 0	0 0	0 0	0 0	0 0	50 0	0 0	0 0
Gas fired	Gcal/hr	0 0	0 0	0 0	0 0	0 0	0 0	0 0	0 0	0 0	0 0	150 0

Investment Schedules

Case Number 3 a DH Sensitivity

Summary of Investments

Study Year Calendar Year		1 1995	2 1996	3 1997	4 1998	5 1999	6 2000	7 2001	8 2002	9 2003	10 2004	11 2005
Capital Expenditure Schedules												
Investment in Electric and Thermal Energy Supply												
Bishkek DH System												
TES 1 CHP Plant Rehabilitation	$000	0 0	0 0	16 578 9	5 037 8	0 0	0 0	0 0	0 0	0 0	0 0	0 0
Installation of new additional HOBs	$000	0 0	0 0	0 0	0 0	0 0	0 0	0 0	0 0	0 0	0 0	0 0
Local DH System												
Installation of new additional HOBs	$000	0 0	0 0	0 0	0 0	0 0	0 0	829 8	847 6	2 599 9	2 660 5	0 0
Bishkek Electric Supply												
New GTCC#1 75 MWe(net)	$000	0 0	0 0	0 0	0 0	0 0	0 0	0 0	0 0	0 0	0 0	0 0
New TG for TES 1 83 7 MWe(net)	$000	0 0	0 0	0 0	0 0	0 0	0 0	0 0	0 0	0 0	0 0	0 0
Investment in Electric Energy Transmission & Distribution System												
Ala Archa220/110kV 200 MW grid uprating	$000	0 0	0 0	0 0	0 0	0 0	0 0	0 0	0 0	0 0	0 0	0 0
Investment in District Heating Distribution System												
District heating system upgrades rehab and modernization	$000	0 0	0 0	0 0	0 0	0 0	0 0	0 0	0 0	0 0	0 0	0 0
District heating system ugrades extension of HW network	$000	0 0	0 0	0 0	0 0	0 0	7 183 6	0 0	0 0	0 0	0 0	0 0
Rehabilitation of Steam Distribution Network	$000	0 0	0 0	0 0	0 0	0 0	0 0	0 0	0 0	0 0	0 0	0 0
TOTAL ANNUAL CAPITAL EXPENDITURE	$000	0 0	0 0	16 578 9	5 037 8	0 0	7 183 6	829 8	847 6	2 599 9	2 660 5	0 0
Debt Service Schedules												
Investment in Electric and Thermal Energy Supply												
Bishkek DH System												
TES 1 CHP Plant Rehabilitation	$000	0 0	0 0	0 0	3 286 3	4 284 9	4 284 9	4 284 9	4 284 9	4 284 9	4 284 9	4 284 9
Installation of new additional HOBs	$000	0 0	0 0	0 0	0 0	0 0	0 0	0 0	0 0	0 0	0 0	0 0
Local DH System												
Installation of new additional HOBs	$000	0 0	0 0	0 0	0 0	0 0	0 0	0 0	0 0	266 5	266 5	1 102 0
Bishkek Electric Supply												
New GTCC#1 75 MWe(net)	$000	0 0	0 0	0 0	0 0	0 0	0 0	0 0	0 0	0 0	0 0	0 0
New TG for TES 1 83 7 MWe(net)	$000	0 0	0 0	0 0	0 0	0 0	0 0	0 0	0 0	0 0	0 0	0 0
Investment in Electric Energy Transmission & Distribution System												
Ala Archa220/110kV 200 MW grid uprating	$000	0 0	0 0	0 0	0 0	0 0	0 0	0 0	0 0	0 0	0 0	0 0
Investment in District Heating Distribution System												
District heating system upgrades rehab and modernization	$000	0 0	0 0	0 0	0 0	0 0	0 0	0 0	0 0	0 0	0 0	0 0
District heating system ugrades extension of HW network	$000	0 0	0 0	0 0	0 0	0 0	0 0	1 423 9	1 423 9	1 423 9	1 423 9	1 423 9
Rehabilitation of Steam Distribution Network	$000	0 0	0 0	0 0	0 0	0 0	0 0	0 0	0 0	0 0	0 0	0 0
TOTAL ANNUAL INVESTMENT COSTS	$000	0 0	0 0	0 0	0 0	0 0	0 0	1 423 9	1 423 9	1 423 9	1 423 9	1 423 9

Case 4a

Summary of Costs

Case Number 4 a DH Sensitivity

Study Year		1	2	3	4	5	6	7	8	9	10	11
Calendar Year		1995	1996	1997	1998	1999	2000	2001	2002	2003	2004	2005
Production Costs												
Primary Energy Expenses												
Coal	$000	43 185	58 560	61 084	61 168	60 756	61 891	63 146	64 473	65 691	67 230	68 814
Mazut	$000	3 272	1 372	1 431	1 433	1 424	1 450	1 480	1 511	1 539	1 575	1 612
Natural gas	$000	15 421	4 255	3 198	2 609	1 935	1 168	1 080	1 026	989	984	996
Grid Electric	$000	7	20	46	0	0	25	53	91	150	229	340
Total primary energy	$000	61 884	64 207	65 760	65 210	64 114	64 535	65 759	67 100	68 369	70 019	71 763
Operating and Maintenance Expenses												
Bishkek TES 1 CHP Plant	$000	11 000	12 342	13 904	13 767	15 184	16 713	16 287	17 933	19 748	21 786	23 787
Bishkek TES 1 and TES 2 HOBs	$000	304	358	409	318	212	83	66	55	46	43	42
Industrial steam distribution system	$000	144	160	178	199	223	252	274	299	327	357	390
District heating distribution system	$000	3 000	3 049	3 006	2 915	2 805	2 939	2 981	3 022	3 062	3 101	3 139
New GTCC plant	$000	0	0	0	0	0	0	0	0	0	0	0
Local DH system HOBs	$000	184	216	0	0	0	0	0	0	0	0	0
Total O&M	$000	14 632	16 124	17 496	17 199	18 424	19 986	19 608	21 309	23 183	25 287	27 358
Total Production Costs	$000	76 516	80 331	83 256	82 410	82 538	84 521	85 366	88 409	91 552	95 306	99 121
Investments												
TES 1 Rehabilitation and New HOBs	$000	0	0	16 579	5 038	0	0	0	0	0	0	0
New Self generation Capacity	$000	0	0	0	0	0	0	0	0	0	0	0
District Heating System Rehabilitation	$000	0	2 898	14 786	8 913	3 150	7 184	0	0	0	0	0
New HOBs for Local DH System	$000	0	0	0	0	0	0	0	0	0	0	0
Total Investment	$000	0	2 898	31 365	13 950	3 150	7 184	0	0	0	0	0
Total Annual Cost	$000	76 516	83 229	114 622	96 360	85 688	91 705	85 366	88 409	91 552	95 306	99 121

NPV of Costs		thru 2005	thru 2014
Primary energy expense	$000	388 439	498 361
O&M expense	$000	111 724	161 049
Subtotal production costs	$000	500 163	659 410
Investments	$000	38,927	38 927
Total Annual Costs	$000	539 090	698 338
End effect Adjustment	$000	(7 756)	(7 756)
Total Effective Cost	$000	531 335	690 582

Allocation of Costs Case No 4 a DH Sensitivity

Study Year		1	2	3	4	5	6	7	8	9	10	11
Calendar Year		1995	1996	1997	1998	1999	2000	2001	2002	2003	2004	2005
Production Costs												
Fuel and Primary Energy Expenses												
Electric Account												
Bishkek TES 1 CHP fuel	$000	33 171	33 941	34 910	35 351	36 120	37 329	38 532	39 736	40 597	41 880	43 162
New GTCC fuel	$000	0	0	0	0	0	0	0	0	0	0	0
Grid electric for electric loads	$000	7	20	46	0	0	25	53	90	148	227	337
Total primary energy	$000	33 178	33 961	34 956	35 351	36 120	37 354	38 585	39 826	40 746	42 107	43 499
District Heating Account												
Bishkek TES 1 CHP fuel	$000	20 374	20 900	21 533	21 260	20 222	20 197	20 292	20 459	20 814	21 103	21 438
Bishkek TES 1 and TES 2 HOBs fuel	$000	1 942	2 251	2 526	1 936	1 266	486	384	316	265	244	238
Local DH system HOBs fuel	$000	1 178	1 359	0	0	0	0	0	0	0	0	0
Grid electric for pumping power	$000	0	0	1	0	0	0	0	1	1	2	3
GTCC fuel for pumping power	$000	0	0	0	0	0	0	0	0	0	0	0
Bishkek TES 1 CHP fuel for pumping power	$000	524	541	389	375	354	346	348	351	352	357	363
Total primary energy	$000	24 017	25 052	24 448	23 571	21 843	21 030	21 024	21 127	21 433	21 706	22 042
Process Steam Account												
Bishkek TES 1 CHP fuel	$000	4 689	5 194	6 356	6 288	6 152	6 151	6 149	6 147	6 190	6 206	6 222
Operating and Maintenance Expenses												
Electric Account												
Bishkek TES 1 CHP Plant	$000	8 250	9 256	10 428	10 326	11 388	12 534	12 215	13 450	14 811	16 339	17 840
New GTCC	$000	0	0	0	0	0	0	0	0	0	0	0
Total O&M	$000	8 250	9 256	10 428	10 326	11 388	12 534	12 215	13 450	14 811	16 339	17 840
District Heating Account												
Bishkek TES 1 CHP Plant	$000	1 375	1 543	1 738	1 721	1 898	2 089	2 036	2 242	2 468	2 723	2 973
Bishkek TES 1 and TES 2 HOBs	$000	304	358	409	318	212	83	66	55	46	43	42
District heating distribution system	$000	3 000	3 049	3 006	2 915	2 805	2 939	2 981	3 022	3 062	3 101	3 139
Local DH system HOBs	$000	184	216	0	0	0	0	0	0	0	0	0
Total O&M	$000	4 863	5 165	5 152	4 954	4 914	5 111	5 082	5 318	5 577	5 868	6 155
Process Steam Account												
Bishkek TES 1 CHP Plant	$000	1 375	1 543	1 738	1 721	1 898	2 089	2 036	2 242	2 468	2 723	2 973
Process steam distribution system	$000	144	160	178	199	223	252	274	299	327	357	390
Total O&M	$000	1 519	1 703	1 916	1 920	2 121	2 341	2 310	2 541	2 795	3 080	3 363
Debt Service												
Electric Account												
TES 1 CHP Plant Rehabilitation	$000	0	0	0	2 465	3 214	3 214	3 214	3 214	3 214	3 214	3 214
New Self generating Capacity	$000	0	0	0	0	0	0	0	0	0	0	0
Ala Archa220/110kV 200 MW grid uprating	$000	0	0	0	0	0	0	0	0	0	0	0
Total	$000	0	0	0	2 465	3 214	3 214	3 214	3 214	3 214	3 214	3 214
District Heating Account												
TES 1 CHP Plant Rehabilitation	$000	0	0	0	411	536	536	536	536	536	536	536
New HOBs for Bishkek DH System	$000	0	0	0	0	0	0	0	0	0	0	0
New HOBs for Local DH System	$000	0	0	0	0	0	0	0	0	0	0	0
District Heating System Rehabilitation	$000	0	0	574	3,505	5 272	5 896	7 320	7 320	7 320	7 320	7 320
Total	$000	0	0	574	3 916	5 808	6 432	7 856	7 856	7 856	7 856	7 856
Process Steam Account												
TES 1 CHP Plant Rehabilitation	$000	0	0	0	411	536	536	536	536	536	536	536
Steam Distribution System Rehabilitation	$000	0	0	0	0	0	0	0	0	0	0	0
Total	$000	0	0	0	411	536	536	536	536	536	536	536

Partial Tariffs Case No 4 a DH Sensitivity

Study Year		1	2	3	4	5	6	7	8	9	10	11
Calendar Year		1995	1996	1997	1998	1999	2000	2001	2002	2003	2004	2005
Electric Account												
Total production costs	$000	41 428	43 217	45 383	45 677	47 508	49 888	50 800	53 276	55 557	58 446	61 339
Total carrying charges	$000	0	0	0	2 465	3,214	3 214	3 214	3 214	3 214	3,214	3 214
Total cost of service	$000	41 428	43 217	45 383	48 142	50 722	53 102	54 013	56 490	58 771	61 660	64 553
Total sales of electricity	GWh	1 352 0	1 409 6	1 459 4	1 500 3	1 542 4	1 585 7	1 630 1	1 675 8	1 722 6	1 770 6	1 819 8
Partial tariff production costs	cents/kWh	3 06	3 07	3 11	3 04	3 08	3 15	3 12	3 18	3 23	3 30	3 37
Partial tariff carrying charges	cents/kWh	0 00	0 00	0 00	0 16	0 21	0 20	0 20	0 19	0 19	0 18	0 18
Partial tariff all costs	cents/kWh	3 06	3 07	3 11	3 21	3 29	3 35	3 31	3 37	3 41	3 48	3 55
District Heating Account												
Total production costs	$000	28 880	30 217	29 601	28 525	26 757	26 141	26 107	26 445	27 010	27 574	28 197
Total carrying charges	$000	0	0	574	3 916	5 808	6 432	7,856	7 856	7,856	7,856	7,856
Total cost of service	$000	28 880	30 217	30 175	32 441	32 565	32 573	33 963	34 300	34 865	35 429	36 053
Total sales of district heat	Tcal	2 093 6	2 208 0	2 285 0	2 273 0	2 253 0	2 260 0	2 271 0	2 287 0	2 308 0	2 336 0	2 372 0
Partial tariff production costs	$/Gcal	13 79	13 69	12 95	12 55	11 88	11 57	11 50	11 56	11 70	11 80	11 89
Partial tariff carrying charges	$/Gcal	0 00	0.00	0.25	1 72	2 58	2 85	3 46	3.44	3 40	3.36	3.31
Partial tariff all costs	$/Gcal	13 79	13 69	13 21	14 27	14 45	14 41	14 96	15 00	15 11	15 17	15 20
Process Steam Account												
Total production costs	$000	6 208	6 896	8 272	8 208	8 273	8 492	8 460	8 688	8 985	9 286	9 585
Total carrying charges	$000	0	0	0	411	536	536	536	536	536	536	536
Total cost of service	$000	6 208	6 896	8 272	8 619	8 809	9 027	8 995	9 224	9 521	9 821	10 120
Total sales of process steam	Tcal	400 0	450 0	550 0	550 0	550 0	550 0	550 0	550 0	550 0	550 0	550 0
Partial tariff production costs	$/Gcal	15 52	15 33	15 04	14 92	15 04	15 44	15 38	15 80	16 34	16 88	17 43
Partial tariff carrying charges	$/Gcal	0.00	0 00	0.00	0 75	0 97	0 97	0 97	0 97	0.97	0 97	0.97
Partial tariff all costs	$/Gcal	15 52	15 33	15 04	15 67	16 02	16 41	16 36	16 77	17 31	17 86	18 40

Input Data and Assumptions

Case Number			4 a	DH Sensitivity
Thermal Energy Supply Source	1	TES 1 + HOBs		
Rehabilitate TES 1?	1	Yes		
Electric Energy Supply Source	1	TES 1 + Grid Electric		
Supplemental Electric Capacity	1	New GTCC		
District Heating Scenario	2	Scenario 2	= Modernization/rehabilitation	
Local DH supply by Bishkek DH?	0	No		
When?	199	and beyond		

Study Year			1	2	3	4	5	6	7	8	9	10	11
Calendar Year			1995	1996	1997	1998	1999	2000	2001	2002	2003	2004	2005
Thermal Energy													
District Heating													
Maximum Demand													
Existing customers	generation basis	Gcal/hr	900 0	935 0	985 0	968 0	951 0	938 0	925 0	914 0	906 0	901 0	899 0
New customers	generation basis	Gcal/hr	46.0	53.0	0.0	0.0	0.0	0.0	0.0	0.0	0.0	0.0	0 0
Total	generation basis	Gcal/hr	946 0	988 0	985 0	968 0	951 0	938 0	925 0	914 0	906 0	901 0	899 0
Disposition of energy													
Existing customers	sales basis	Tcal	2 000 0	2 100 0	2 285 0	2 273 0	2 253 0	2 260 0	2 271 0	2 287 0	2 308 0	2 336 0	2 372 0
New customers	generation basis	Tcal	104 0	120 0	0 0	0 0	0 0	0 0	0 0	0 0	0 0	0 0	0 0
Contingency Requirements (LU or 15 /)													
Bishkek DH System	15 0 /	Gcal/hr	135 0	140 3	147 8	155 0	155 0	155 0	155 0	155 0	155 0	155 0	155 0
Local DH System	15 0 /	Gcal/hr	50 0	50 0	0 0	0 0	0 0	0 0	0 0	0 0	0 0	0 0	0 0
District heating pipe losses													
Bishkek DH system		/	25 01 /	25 00 /	21 23 /	19 96 /	16 64 /	13 94 /	13 62 /	13 53 /	13 46 /	13 32 /	13 11 /
Local DH system		/	10 00% /	10 00 /	10 00 /	10 00% /	10 00 /	10 00 /	10 00 /	10 00 /	10 00 /	10 00 /	10 00 /
DH pumping at booster stations		kWh/Gcal	7 70	7 70	5 60	5 60	5 60	5 60	5 60	5 60	5 60	5 60	5 60
CHP plant piping efficiency		/	96 0% /										
Process Steam													
Energy	generation basis	Tcal	571 4	642 9	785 7	785 7	785 7	785 7	785 7	785 7	785 7	785 7	785 7
Piping losses		/	30 00% /	30 00 /	30 00 /	30 00 /	30 00 /	30 00 /	30 00 /	30 00 /	30 00 /	30 00 /	30 00 /
Ratio of annual maximum demand to annual average demand			2 0										
Heat exchange efficiency steam > hot water		Gcal/hr/Gcal/hr	1 0										
Electric Energy			1995	1996	1997	1998	1999	2000	2001	2002	2003	2004	2005
Maximum Demand local customers	generation basis	MW	425 0	434 2	443 6	453 3	463 1	473 2	483 4	493 9	504 6	515 6	526 8
annual growth		/		2 2 /	2 2 /	2 2 /	2 2 /	2 2 /	2 2 /	2 2 /	2 2 /	2 2 /	2 2 /
Disposition of energy local customers	sales basis	GWh	1 002 0	1 052 0	1 094 0	1 127 0	1 161 0	1 196 0	1 232 0	1 269 0	1 307 0	1 346 0	1 386 0
annual growth		/		5 0 /	4 0 /	3 0% /	3 0 /	3 0 /	3 0 /	3 0 /	3 0 /	3 0 /	3 0 /
T&D losses		/	12 0 /	12 0 /	12 0 /	11 0 /	11 0 /	11 0	11 0 /	11 0 /	10 0 /	10 0 /	10 0 /
Contingency requirement (LU or 15 / max)	15 0 /	MW	80 0	81 6	83 0	84 8	86 6	88 5	90 4	92 3	94 3	96 3	98 4
Grid capability		MW	200 0	200 0	200 0	200 0	200 0	200 0	200 0	200 0	200 0	200 0	200 0
	esc after 2005												
Grid electricity price forecast	0 0 /	$/kWh	0 0300	0 0300	0 0300	0 0300	0 0300	0 0300	0 0300	0 0300	0 0300	0 0300	0 0300
GTCC unit addition block size		MW	75 0										
GTCC capability		MW	0 0	0 0	0 0	0 0	0 0	0 0	0 0	0 0	0 0	0 0	0 0
GTCC fuel cost		$/kWh	0 0189	0 0189	0 0189	0 0189	0 0189	0 0189	0 0189	0 0189	0 0189	0 0189	0 0189
GTCC annual average heat rate		kcal/kWh	2 008 1										
Maximum Demand transfers	generation basis	MW	100 0	102 2	104 4	106 7	109 0	111 3	113 7	116 2	118 7	121 3	123 9
annual growth		/		2 2 /	2 2 /	2 2 /	2 2 /	2 2 /	2 2 /	2 2 /	2 2 /	2 2 /	2 2 /
Disposition of energy transfers	sales basis	GWh	350 0	357 6	365 4	373 3	381 4	389 7	398 1	406 8	415 6	424 6	433 8
annual growth		/		2 2 /	2 2 /	2 2 /	2 2	2 2 /	2 2 /	2 2 /	2 2 /	2 2 /	2 2 /
Fuel Price Forecast	esc after 2005												
Coal	0 0 /	$/Gcal	8 80	8 80	8 80	8 80	8 80	8 80	8 80	8 80	8 80	8 80	8 80
Mazut	0 0 /	$/Gcal	10 00	10 00	10 00	10 00	10 00	10 00	10 00	10 00	10 00	10 00	10 00
Natural Gas	0 0 /	$/Gcal	9 40	9 40	9 40	9 40	9 40	9 40	9 40	9 40	9 40	9 40	9 40

Fuel Mix for [illegible] Resources		1995	1996	19[illegible]	1998	1999	2000	2001	2002	2003	[illegible]	2005
TES 1 CHP boilers												
Coal	%	75 0%	97 0%	97 0%	97 0%	97 0%	97 0%	97 0%	97 0%	97 0%	97 0%	97 0%
Mazut	%	5 0%	2 0%	2 0%	2 0%	2 0%	2 0%	2 0%	2 0%	2 0%	2 0%	2 0%
Natural Gas	%	20 0%	1 0%	1 0%	1 0%	1 0%	1 0%	1 0%	1 0%	1 0%	1 0%	1 0%
Weighted average fuel price	$/Gcal	8 98	8 83	8 83	8 83	8 83	8 83	8 83	8 83	8 83	8 83	8 83
Bishkek HOBs												
Coal	%	0 0%	0 0%	0 0%	0 0%	0 0%	0 0%	0 0%	0 0%	0 0%	0 0%	0 0%
Mazut	%	0 0%	0 0%	0 0%	0 0%	0 0%	0 0%	0 0%	0 0%	0 0%	0 0%	0 0%
Natural Gas	%	100 0%	100 0%	100 0%	100 0%	100 0%	100 0%	100 0%	100 0%	100 0%	100 0%	100 0%
Weighted average fuel price	$/Gcal	9 40	9 40	9 40	9 40	9 40	9 40	9 40	9 40	9 40	9 40	9 40
Local DH Boilers												
Coal	%	0 0%	0 0%	0 0%	0 0%	0 0%	0 0%	0 0%	0 0%	0 0%	0 0%	0 0%
Mazut	%	0 0%	0 0%	0 0%	0 0%	0 0%	0 0%	0 0%	0 0%	0 0%	0 0%	0 0%
Natural Gas	%	100 0%	100 0%	100 0%	100 0%	100 0%	100 0%	100 0%	100 0%	100 0%	100 0%	100 0%
Weighted average fuel price	$/Gcal	9 40	9 40	9 40	9 40	9 40	9 40	9 40	9 40	9 40	9 40	9 40
Boiler efficiencies		1995	1996	1997	1998	1999	2000	2001	2002	2003	2004	2005
Bishkek CHP boilers (TES 1)		87 5%	87 3%	87 1%	86 9%	88 5%	88 4%	88 3%	88 3%	88 2%	88 0%	87 8%
Bishkek HOBs (TES 1 and TES 2)	%	89 0%	89 0%	89 0%	89 0%	89 0%	89 0%	89 0%	89 0%	89 0%	89 0%	89 0%
Local HOBs (Frunze JAL)												
Coal	%	0 0%	0 0%	0 0%	0 0%	0 0%	0 0%	0 0%	0 0%	0 0%	0 0%	0 0%
Mazut	%	89 0%	89 0%	89 0%	89 0%	89 0%	89 0%	89 0%	89 0%	89 0%	89 0%	89 0%
Natural gas	%	83 0%	83 0%	83 0%	83 0%	83 0%	83 0%	83 0%	83 0%	83 0%	83 0%	83 0%
Weighted average	%	*83 0%*	*83 0%*	*83 0%*	*83 0%*	*83 0%*	*83 0%*	*83 0%*	*83 0%*	*83 0%*	*83 0%*	*83 0%*
Process steam generation	Gcal/hr add l heat input per Gcal/hr steam	0 63	0 63	0 63	0 63	0 62	0 62	0 62	0 62	0 62	0 63	0 63
Performance Degradation												
Annual change in boiler efficiency	%	0 20%										
Annual change in electric capability	%	0 10%										
Fuel Allocation for Cogeneration Energy												
Methodology #A CHP advantage devoted to DH energy												
Electric power only production efficiency	%	30 0%										
Methodology #B CHP advantage devoted to electric energy												
Distric heat only production efficiency	%	87 0%										
Allocation Factors for TES 1 CHP Plant O&M and Investment												
% allocated to electric production	%	75 0%										
% allocated to district heating production	%	12 5%										
% allocated to process steam production	%	12 5%										
Economic and Financial Parameters												
Capital cost real escalation rates		1995 2000	2001 2014									
Western	%	0 00%	0 00%									
Russian	%	0 00%	0 00%									
Kyrgyz labor	%	16 90%	6 60%									
Kyrgyz material	%	1 70%	0 90%									
Kyrgyz equipment	%	1 50%	3 20%									
Discount Rate for NPV Calculation	%	12 00%										
Physical contingencies + technical assistance & training	% of direct costs	12 50%										
Composite escalation factors												
Western		1 000	1 000	1 000	1 000	1 000	1 000	1 000	1 000	1 000	1 000	1 000
Russian		1 000	1 000	1 000	1 000	1 000	1 000	1 000	1 000	1 000	1 000	1 000
Kyrgyz labor		1 000	1 169	1 367	1 598	1 867	2 183	2 327	2 481	2 645	2 819	3 005
Kyrgyz material		1 000	1 017	1 034	1 052	1 070	1 088	1 098	1 108	1 118	1 128	1 138
Kyrgyz equipment		1 000	1 015	1 030	1 046	1 061	1 077	1 112	1 147	1 184	1 222	1 261

0 00	0 00
0 00%	0 00%
16 90	6 60%
1 70	0 90%

Load Forecast

Case Number 4 a DH Sensitivity

Load Forecast Development

Study Year		1	2	3	4	5	6	7	8	9	10	11
Calendar Year		1995	1996	1997	1998	1999	2000	2001	2002	2003	2004	2005
District heating pipe losses												
Bishkek DH system	/	25 01 /	25 00 /	21 23 /	19 96 /	16 64 /	13 94 /	13 62 /	13 53 /	13 46 /	13 32 /	13 11 /
Local DH system	/	10 00 /	10 00%	10 00 /	10 00 /	10 00 /	10 00 /	10 00 /	10 00 /	10 00 /	10 00 /	10 00 /
T&D losses (in Bishkek)	/	12 0 /	12 0 /	12 0 /	11 0%	11 0 /	11 0 /	11 0 /	11 0 /	10 0 /	10 0 /	10 0 /
Thermal Energy												
Bishkek DH System Hot Water												
Maximum Demand (generation basis)												
Existing customers	Gcal/hr	900 0	935 0	985 0	968 0	951 0	938 0	925 0	914 0	906 0	901 0	899 0
New customers	Gcal/hr	0.0	0.0	0.0	0 0	0 0	0 0	0.0	0.0	0.0	0.0	0.0
Total Maximum Demand	*Gcal/hr*	*900 0*	*935 0*	*985 0*	*968 0*	*951 0*	*938 0*	*925 0*	*914 0*	*906 0*	*901 0*	*899 0*
Disposition of Energy												
Existing customers	Tcal	2 000 0	2 100 0	2 285 0	2 273 0	2 253 0	2 260 0	2 271 0	2 287 0	2 308 0	2 336 0	2 372 0
New customers	Tcal	0 0	0.0	0.0	0 0	0 0	0 0	0 0	0 0	0 0	0 0	0 0
Total (sales basis)	Tcal	2 000 0	2 100 0	2 285 0	2 273 0	2 253 0	2 260 0	2 271 0	2 287 0	2 308 0	2 336 0	2 372 0
Distribution losses												
Existing customers	Tcal	667 0	700 0	615 9	566 8	449 7	366 1	358 1	357 8	359 0	359 0	357 9
New customers	Tcal	0.0	0.0	0.0	0 0	0.0	0 0	0.0	0.0	0 0	0 0	0 0
Total Disposition of Energy	*Tcal*	*2 66 0*	*2 800 0*	*2 900 9*	*2 839 8*	*2 02*	*2 626 1*	*2 629 1*	*2 644 8*	*2 66 0*	*2 695 0*	*2 29 9*
Bishkek DH System Process Steam												
Energy generation basis	Tcal	571 4	642 9	785 7	785 7	785 7	785 7	785 7	785 7	785 7	785 7	785 7
Energy sales basis	Tcal	400 0	450 0	550 0	550 0	550 0	550 0	550 0	550 0	550 0	550 0	550 0
Local DH System Hot Water												
Maximum Demand (generation basis)	Gcal/hr	46 0	53 0	0 0	0 0	0 0	0 0	0 0	0 0	0 0	0 0	0 0
Disposition of Energy												
Existing customers	Tcal	93 6	108 0	0 0	0 0	0 0	0 0	0 0	0 0	0 0	0 0	0 0
Distribution losses	Tcal	10 4	12 0	0.0	0 0	0 0	0.0	0.0	0 0	0 0	0 0	0 0
Total Disposition of Energy	*Tcal*	104 0	120 0	0 0	0 0	0 0	0 0	0 0	0 0	0 0	0 0	0 0
Electric Energy												
Maximum Demand (generation basis)												
Local customers	MW	425 0	434 2	443 6	453 3	463 1	473 2	483 4	493 9	504 6	515 6	526 8
Transfers	MW	100 0	107 7	104 4	106 7	109 0	111 3	113 7	116 2	118 7	121 3	123 9
DH pumping power	MW	7.3	7 6	5.5	5 4	5 3	5 3	5 2	5 1	5 1	5 0	5 0
Total Maximum Demand	*MW*	*532 3*	*544 0*	*553 5*	*565 3*	*5 4*	*589*	*602 4*	*615 2*	*628 4*	*641 9*	*655 8*
Disposition of Energy												
Local customers (sales basis)	GWh	1 009 0	1 052 0	1 094 0	1 177 0	1 161 0	1 196 0	1 232 0	1 269 0	1 307 0	1 346 0	1 386 0
Transfers	GWh	350 0	357 6	365 4	373 3	381 4	389 7	398 1	406 8	415 6	424 6	433 8
DH pumping power	GWh	21 3	22 5	16 2	15 9	15 1	14 7	14 7	14 8	14 9	15 1	15 3
Total consumption	GWh	1 373 3	1 437 1	1 475 6	1 516 2	1 557 5	1 600 4	1 644 8	1 690 6	1 737 5	1 785 7	1 835 1
T&D losses	GWh	187 3	195 3	201 2	187 4	192 5	197 8	203 3	208 9	193 1	198 4	203 9
Total Disposition of Energy	*GWh*	*1 560 6*	*1 632 4*	*1 676 8*	*1 703 6*	*1 750 0*	*1 798 2*	*1 848 1*	*1 899 5*	*1 930 6*	*1 984 1*	*2 039 0*

Summary of Load Forecasts (generation basis)

Calendar Year		1995	1996	199	1998	1999	2000	2001	2002	2003	2004	2005
Thermal Load to be Served by Bishkek DH System												
Maximum Demand Hot Water	Gcal/hr	900 0	935 0	985 0	968 0	951 0	938 0	925 0	914 0	906 0	901 0	899 0
Thermal Energy Hot Water	Tcal	2 667 0	2 800 0	2 900 9	2 839 8	2 702 7	2 626 1	2 629 1	2 644 8	2 667 0	2 695 0	2 729 9
Maximum Demand Process Steam	Gcal/hr	130 5	146 8	179 4	179 4	179 4	179 4	179 4	179 4	179 4	179 4	179 4
Thermal Energy Process Steam	Tcal	571 4	642 9	785 7	785 7	785 7	785 7	785 7	785 7	785 7	785 7	785 7
Thermal Load to be Served by Local DH System												
Maximum Demand Hot Water	Gcal/hr	46 0	53 0	0 0	0 0	0 0	0 0	0 0	0 0	0 0	0 0	0 0
Thermal Energy Hot Water	Tcal	104 0	120 0	0 0	0 0	0 0	0 0	0 0	0 0	0 0	0 0	0 0
Maximum Demand Process Steam	Gcal/hr	0 0	0 0	0 0	0 0	0 0	0 0	0 0	0 0	0 0	0 0	0 0
Thermal Energy Process Steam	Tcal	0 0	0 0	0 0	0 0	0 0	0 0	0 0	0 0	0 0	0 0	0 0
Total Thermal Load to be Served												
Maximum Demand Hot Water	Gcal/hr	946 0	988 0	985 0	968 0	951 0	938 0	925 0	914 0	906 0	901 0	899 0
Thermal Energy Hot Water	Tcal	2 771 0	2 920 0	2 900 9	2 839 8	2 702 7	2 626 1	2 629 1	2 644 8	2 667 0	2 695 0	2 729 9
Maximum Demand Process Steam	Gcal/hr	130 5	146 8	179 4	179 4	179 4	179 4	179 4	179 4	179 4	179 4	179 4
Thermal Energy Process Steam	Tcal	571 4	642 9	785 7	785 7	785 7	785 7	785 7	785 7	785 7	785 7	785 7
Total Electric Load Forecast												
Maximum Demand	MW	532 3	544 0	553 5	565 3	577 4	589 7	602 4	615 2	628 4	641 9	655 8
Electric Energy	GWh	1 560 6	1,627 4	1,676 8	1 703 6	1 750 0	1 798 2	1 848 1	1 899 5	1,930 6	1 984 1	2 039 0

Load/Capacity Balance Case No 4 a DH Sensitivity

Year		1	2	3	4	5	6	7	8	9	10	11
Calendar Year		1995	1996	1997	1998	1999	2000	2001	2002	2003	2004	2005
Electric Energy												
Maximum Demand	MW	532.3	544.0	553.5	565.3	577.4	589.7	602.4	615.2	628.4	641.9	655.8
Existing capacity resources												
TES 1 CHP Plant	MW	550.5	549.9	549.4	549.4	633.1	591.4	591.4	591.4	590.8	590.2	589.6
Grid electric capacity	MW	200.0	200.0	200.0	200.0	200.0	200.0	200.0	200.0	200.0	200.0	200.0
GTCC	MW	0.0	0.0	0.0	0.0	0.0	0.0	0.0	0.0	0.0	0.0	0.0
Total capacity resources before additions	MW	750.5	749.9	749.4	749.4	833.1	791.4	791.4	791.4	790.8	790.2	789.6
/ reserve before capacity additions	/	41.0/	37.9/	35.4/	32.6/	44.3/	34.2/	31.4/	28.6/	25.8	23.1/	20.4/
Capacity resources required	MW	612.3	625.6	636.6	650.1	664.0	678.2	692.7	707.5	722.7	738.2	754.1
Additional capacity required (minimum)	MW	0.0	0.0	0.0	0.0	0.0	0.0	0.0	0.0	0.0	0.0	0.0
Capacity additions/retirements												
TES 1 CHP Rehabilitation (install TG11 or equiv)	MW	0.0	0.0	0.0	83.7	0.0	0.0	0.0	0.0	0.0	0.0	0.0
TES 1 CHP Retirement of Unit 1 and 2	MW	0.0	0.0	0.0	0.0	(41.7)	0.0	0.0	0.0	0.0	0.0	0.0
Grid electric capacity additions	MW	0.0	0.0	0.0	0.0	0.0	0.0	0.0	0.0	0.0	0.0	0.0
GTCC capacity additions	MW	0.0	0.0	0.0	0.0	0.0	0.0	0.0	0.0	0.0	0.0	0.0
Total capacity resources after additions	MW	750.5	749.9	749.4	833.1	833.1	791.4	791.4	791.4	790.8	790.2	789.6
/ reserve after capacity additions	/	41.0/	37.9/	35.4/	47.4/	44.3/	34.2/	31.4/	28.6/	25.8/	23.1/	20.4/
Thermal Energy Hot Water												
Bishkek DH System												
Maximum Demand	Gcal/hr	900.0	935.0	985.0	968.0	951.0	938.0	925.0	914.0	906.0	901.0	899.0
Existing capacity resources												
TES 1 CHP Plant												
nominal HW capacity	Gcal/hr	740.0	740.0	740.0	895.0	895.0	811.4	811.4	811.4	811.4	811.4	811.4
peaking HW capacity	Gcal/hr	281.3	265.0	232.4	232.4	232.4	229.0	229.0	229.0	229.0	229.0	229.0
total	Gcal/hr	1,021.3	1,005.0	972.4	1,127.4	1,127.4	1,040.4	1,040.4	1,040.4	1,040.4	1,040.4	1,040.4
TES 1 HOBs	Gcal/hr	300.0	300.0	300.0	300.0	300.0	300.0	300.0	300.0	300.0	300.0	300.0
TES 2 HOBs	Gcal/hr	192.0	192.0	192.0	192.0	192.0	192.0	192.0	192.0	192.0	192.0	192.0
Existing HOBs Frunze	Gcal/hr	0.0	0.0	150.0	150.0	150.0	150.0	150.0	150.0	150.0	150.0	0.0
Existing HOBs JAL	Gcal/hr	0.0	0.0	40.0	40.0	40.0	40.0	40.0	40.0	40.0	40.0	40.0
New HOBs in local DH system	Gcal/hr	0.0	0.0	0.0	0.0	0.0	0.0	0.0	0.0	0.0	0.0	0.0
Total capacity resources before additions	Gcal/hr	1,513.3	1,497.0	1,654.4	1,809.4	1,809.4	1,722.4	1,722.4	1,722.4	1,722.4	1,722.4	1,572.4
/ reserve before capacity additions		68.1/	60.1/	68.0/	86.9/	90.3/	83.6/	86.2/	88.4	90.1	91.2	74.9/
Capacity resources required	Gcal/hr	1,035.0	1,075.3	1,137.8	1,173.0	1,106.0	1,093.0	1,080.0	1,069.0	1,061.0	1,056.0	1,054.0
Additional capacity required (minimum)	Gcal/hr	0.0	0.0	0.0	0.0	0.0	0.0	0.0	0.0	0.0	0.0	0.0
Capacity additions/retirements												
New HOB capacity	Gcal/hr	0.0	0.0	0.0	0.0	0.0	0.0	0.0	0.0	0.0	0.0	0.0
Total capacity resources after additions	Gcal/hr	1,513.3	1,497.0	1,654.4	1,809.4	1,809.4	1,722.4	1,722.4	1,722.4	1,722.4	1,722.4	1,572.4
/ reserve after capacity additions	/	68.1/	60.1/	68.0/	86.9/	90.3	83.6/	86.2	88.4	90.1/	91.2	74.9/
Local DH System												
Maximum Demand	Gcal/hr	46.0	53.0	0.0	0.0	0.0	0.0	0.0	0.0	0.0	0.0	0.0
Existing capacity resources												
Existing HOBs Frunze	Gcal/hr	150.0	150.0	0.0	0.0	0.0	0.0	0.0	0.0	0.0	0.0	0.0
Existing HOBs JAL	Gcal/hr	40.0	40.0	0.0	0.0	0.0	0.0	0.0	0.0	0.0	0.0	0.0
New HOBs capacity additions	Gcal/hr	0.0	0.0	0.0	0.0	0.0	0.0	0.0	0.0	0.0	0.0	0.0
Total capacity resources before additions	Gcal/hr	190.0	190.0	0.0	0.0	0.0	0.0	0.0	0.0	0.0	0.0	0.0
/ reserve before capacity additions	/	313.0/	258.5	n/a	n/a	n/a	n/a	n/a	n/a	n/a	n/a	n/a
Capacity resources required	Gcal/hr	96.0	103.0	0.0	0.0	0.0	0.0	0.0	0.0	0.0	0.0	0.0
Additional capacity required (minimum)	Gcal/hr	0.0	0.0	0.0	0.0	0.0	0.0	0.0	0.0	0.0	0.0	0.0
Capacity additions/retirements												
New HOB capacity	Gcal/hr	0.0	0.0	0.0	0.0	0.0	0.0	0.0	0.0	0.0	0.0	0.0
Frunze boiler retirements	Gcal/hr	0.0	0.0	0.0	0.0	0.0	0.0	0.0	0.0	0.0	0.0	0.0
Total capacity resources after additions	Gcal/hr	190.0	190.0	0.0	0.0	0.0	0.0	0.0	0.0	0.0	0.0	0.0
/ reserve after capacity additions	/	313.0/	258.5	n/a	n/a	n/a	n/a	n/a	n/a	n/a	n/a	n/a
Thermal Energy Process Steam												
Maximum Demand	Gcal/hr	130.5	146.8	179.4	179.4	179.4	179.4	179.4	179.4	179.4	179.4	179.4
Existing capacity resources (TES 1 CHP)	Gcal/hr	411.8	411.8	411.8	411.8	411.8	408.4	408.4	408.4	408.4	408.4	408.4
/ reserve		215.6	180.6	129.6/	129.6/	129.6/	127.7/	127.7/	127.7	127.7/	127.7/	127.7/

Energy Production/Fuel Consumption Summary

Case Number 4 a DH Sensitivity

Study Year		1	2	3	4	5	6	7	8	9	10	11
Calendar Year		1995	1996	1997	1998	1999	2000	2001	2002	2003	2004	2005
Energy Production												
Electric Energy Generation												
Bishkek CHP Plant (TES 1)	GWh	1 560 4	1 626 7	1 675 3	1 703 6	1 750 0	1 797 3	1 846 4	1 896 5	1 925 6	1 976 5	2 027 7
Grid electric	GWh	0 2	0 7	1 5	0 0	0 0	0 8	1 8	3 0	5 0	7 6	11 3
GTCC	GWh	0 0	0.0	0.0	0 0	0 0	0.0	0 0	0.0	0.0	0.0	0.0
Total	GWh	1 560 6	1 627 4	1 676 8	1 703 6	1 750 0	1 798 2	1 848 1	1 899 5	1 930 6	1 984 1	2 039 0
Thermal Energy Generation												
District heating (heat hot water)												
Bishkek CHP Plant (TES 1)	Tcal	2 483 2	2 586 9	2 661 7	2 656 5	2 582 9	2 580 0	2 592 7	2 614 9	2 641 9	2 671 9	2 707 3
Bishkek HOBs (TES 1 and TES 2)	Tcal	183 9	213 1	239 1	183 3	119 9	46 1	36 4	29 9	25 1	23 1	22 6
Local DH System HOBs	Tcal	104.0	120.0	0.0	0 0	0.0	0.0	0.0	0.0	0.0	0.0	0.0
Total	Tcal	2 771 0	2 920 0	2 900 9	2 839 8	2 702 7	2 626 1	2 629 1	2 644 8	2 667 0	2 695 0	2 729 9
Process steam												
Bishkek DH system (TES 1)	Tcal	571 4	642 9	785 7	785 7	785 7	785 7	785 7	785 7	785 7	785 7	785 7
Fuel Consumption												
Bishkek DH System												
Coal	Tcal	4 907 4	6 654 5	6 941 4	6 950 9	6 904 0	7 033 1	7 175 7	7 376 5	7 464 9	7 639 8	7 819 8
Mazut	Tcal	327 2	137 2	143 1	143 3	142 4	145 0	148 0	151 1	153 9	157 5	161 2
Natural gas	Tcal	1,515.2	308 1	340.2	277 6	205 9	124 3	114 9	109 1	105.2	104 7	106 0
Total	Tcal	6 749 7	7 099 8	7 424 8	7 371 8	7 252 3	7 302 4	7 438 5	7 586 7	7 724 0	7 902 1	8 087 0
Local DH System												
Coal	Tcal	0 0	0 0	0 0	0 0	0 0	0 0	0 0	0 0	0 0	0 0	0 0
Mazut	Tcal	0 0	0 0	0 0	0 0	0 0	0 0	0 0	0 0	0 0	0 0	0 0
Natural gas	Tcal	125.3	144 6	0.0	0.0	0.0	0 0	0 0	0 0	0.0	0 0	0 0
Total	Tcal	125 3	144 6	0 0	0 0	0 0	0 0	0 0	0 0	0 0	0 0	0 0
GTCC natural gas	Tcal	0 0	0 0	0 0	0 0	0 0	0 0	0 0	0 0	0 0	0 0	0 0
Total Fuel Consumption	Tcal	6 875 0	7 244 4	7 424 8	7 371 8	7 252 3	7 302 4	7 438 5	7 586 7	7 724 0	7 902 1	8 087 0
/ by type												
Coal	/	71 4/	91 9/	93 5/	94 3/	95 2/	96 3/	96 5/	96 6/	96 6/	96 7/	96 7/
Mazut	/	4 8/	1 9/	1 9/	1 9%	2 0/	2 0/	2 0/	2 0/	2 0/	2 0/	2 0/
Natural gas	%	23 9%	6.2/	4.6%	3 8%	2 8/	1 7/	1 5%	1 4%	1 4%	1 3%	1 3%
Total	/	100 0/	100 0/	100 0/	100 0/	100 0/	100 0/	100 0/	100 0/	100 0/	100 0/	100 0/

Generating Resource Characteristics

Case Number 4 a DH Sensitivity

Study Year			1	2	3	4	5	6	7	8	9	10	11
Calendar Year			1995	1996	1997	1998	1999	2000	2001	2002	2003	2004	2005
TES 1 CHP Plant			1995	1996	1997	1998	1999	2000	2001	2002	2003	2004	2005
Electric Capability													
Unit #1		MW	35 0	35 0	35 0	35 0	35 0	0 0	0 0	0 0	0 0	0 0	0 0
Unit #2		MW	25 0	25 0	25 0	25 0	25 0	0 0	0 0	0 0	0 0	0 0	0 0
Unit #3		MW	50 0	50 0	50 0	50 0	50 0	50 0	50 0	50 0	50 0	50 0	50 0
Unit #4		MW	35 0	35 0	35 0	35 0	35 0	35 0	35 0	35 0	35 0	35 0	35 0
Unit #5		MW	35 0	35 0	35 0	35 0	35 0	35 0	35 0	35 0	35 0	35 0	35 0
Unit #6		MW	86 0	86 0	86 0	86 0	86 0	86 0	86 0	86 0	86 0	86 0	86 0
Unit #7		MW	60 0	60 0	60 0	60 0	60 0	60 0	60 0	60 0	60 0	60 0	60 0
Unit #8		MW	60 0	60 0	60 0	60 0	60 0	60 0	60 0	60 0	60 0	60 0	60 0
Unit #9		MW	86 0	86 0	86 0	86 0	86 0	86 0	86 0	86 0	86 0	86 0	86 0
Unit #10		MW	86 0	86 0	86 0	86 0	86 0	86 0	86 0	86 0	86 0	86 0	86 0
Unit #11	0	MW	0.0	0.0	0.0	90.0	90.0	90.0	90.0	90.0	90.0	90.0	90.0
Total		MW	558 0	558 0	558 0	648 0	648 0	588 0	588 0	588 0	588 0	588 0	588 0
Largest Unit		MW	86 0	86 0	86 0	90 0	90 0	90 0	90 0	90 0	90 0	90 0	90 0
		MW net	80 0	80 0	80 0	83 7	83 7	83 7	83 7	83 7	83 7	83 7	83 7
DH Capability Hot Water													
Unit #1		Gcal/hr	35 0	35 0	35 0	35 0	35 0	0 0	0 0	0 0	0 0	0 0	0 0
Unit #2		Gcal/hr	48 6	48 6	48 6	48 6	48 6	0 0	0 0	0 0	0 0	0 0	0 0
Unit #3		Gcal/hr	51 0	51 0	51 0	51 0	51 0	51 0	51 0	51 0	51 0	51 0	51 0
Unit #4		Gcal/hr	97 0	97 0	97 0	97 0	97 0	97 0	97 0	97 0	97 0	97 0	97 0
Unit #5		Gcal/hr	97 0	97 0	97 0	97 0	97 0	97 0	97 0	97 0	97 0	97 0	97 0
Unit #6		Gcal/hr	102 6	102 6	102 6	102 6	102 6	102 6	102 6	102 6	102 6	102 6	102 6
Unit #7		Gcal/hr	61 0	61 0	61 0	61 0	61 0	61 0	61 0	61 0	61 0	61 0	61 0
Unit #8		Gcal/hr	61 0	61 0	61 0	61 0	61 0	61 0	61 0	61 0	61 0	61 0	61 0
Unit #9		Gcal/hr	102 6	102 6	102 6	102 6	102 6	102 6	102 6	102 6	102 6	102 6	102 6
Unit #10		Gcal/hr	103 0	103 0	103 0	103 0	103 0	103 0	103 0	103 0	103 0	103 0	103 0
Unit #11		Gcal/hr	0 0	0 0	0 0	155 0	155 0	155 0	155 0	155.0	155.0	155 0	155 0
Total		Gcal/hr	758 8	758 8	758 8	913 8	913 8	830 2	830 2	830 2	830 2	830 2	830 2
Largest Unit		Gcal/hr	103 0	103 0	103 0	155 0	155 0	155 0	155 0	155 0	155 0	155 0	155 0
Boiler Efficiencies			1999	2003									
/o Rehabilitation		/	87 5 /										
w/Rehabilitation		/	89 5 /										
Boiler #14		/	87 5 /	87 3 /	87 1 /	86 9 /	89 5 /	89 5 /	89 5 /	89 5 /	89 5 /	89 3 /	89 1 /
Boiler #15		/	87 5 /	87 3 /	87 1 /	86 9 /	89 5 /	89 5 /	89 5 /	89 5 /	89 5 /	89 3 /	89 1 /
Boiler #16		/	87 5 /	87 3 /	87 1 /	86 9 /	89 5 /	89 5 /	89 5 /	89 5 /	89 5 /	89 3 /	89 1 /
Boiler #17		/	87 5 /	87 3 /	87 1 /	86 9 /	89 5 /	89 5 /	89 5 /	89 5 /	89 5 /	89 3 /	89 1 /
Boiler #18		/	87 5 /	87 3 /	87 1 /	86 9 /	89 5 /	89 5 /	89 5 /	89 5 /	89 5 /	89 3 /	89 1 /
Boiler #19		/	87 5 /	87 3 /	87 1 /	86 9 /	89 5 /	89 5 /	89 5 /	89 5 /	89 5 /	89 3 /	89 1 /
Boiler #20		/	87 5 /	87 3 /	87 1 /	86 9 /	89 5 /	89 5 /	89 5 /	89 5 /	89 5 /	89 3 /	89 1 /
Boiler #21		/	87 5 /	87 3 /	87 1 /	86 9 /	86 7 /	86 5 /	86 3 /	86 1 /	85 9 /	85 7 /	85 5 /
Boiler #22		/	87 5 /	87 3 /	87 1 /	86 9 /	86 7 /	86 5 /	86 3 /	86 1 /	85 9 /	85 7 /	85 5 /
Boiler #23		/	87 5 /	87 3 /	87 1	86 9 /	86 7 /	86 5 /	86 3 /	86 1 /	85 9 /	85 7 /	85 5 /
Boiler #24		/	87 5 /o	87 3 /	87 1 /	86 9 /o	86 7 /o	86 5 /	86 3 /o	86 1 /o	85 9 /	85 7 /o	85 5 /
Weighted average		/	87 5 /	87 3 /	87 1 /	86 9 /	88 5 /	88 4	88 3 /	88 3 /	88 2 /	88 0 /	87 8 /

Calendar year		1995	1996	1997	1998	1999	2000	2001	2002	2003	2004	2005
TES 1 CHP Plant Electrical Rating w/o Rehabilitation												
@ Zero DH Load	MW gross	504 0	504 0	504 0	504 0	504 0	504 0	504 0	504 0	504 0	504 0	504 0
@ 35/ DH Load	MW gross	596 5	596 5	596 5	596 5	596 5	565 5	565 5	565 5	565 5	565 5	565 5
@ 75/ DH Load	MW gross	586 5	586 5	586 5	586 5	586 5	541 0	541 0	541 0	541 0	541 0	541 0
@ Full DH Load	MW gross	550 5	550 5	550 5	550 5	550 5	505 5	505 5	505 5	505 5	505 5	505 5
Change in TES 1 Electrical Rating w/ Rehabilitation												
@ Zero DH Load	MW gross	0 0	0 0	0 0	75 0	0 0	0 0	0 0	0 0	0 0	0 0	0 0
@ 35/ DH Load	MW gross	0 0	0 0	0 0	54 0	0 0	0 0	0 0	0 0	0 0	0 0	0 0
@ 75/ DH Load	MW gross	0 0	0 0	0 0	99 4	0 0	0 0	0 0	0 0	0 0	0 0	0 0
@ Full DH Load	MW gross	0 0	0 0	0 0	90 0	0 0	0 0	0 0	0 0	0 0	0 0	0 0
TES 1 CHP Plant Electrical Rating w/ Rehabilitation												
@ Zero DH Load	MW gross	504 0	504 0	504 0	579 0	579 0	579 0	579 0	579 0	579 0	579 0	579 0
@ 35/ DH Load	MW gross	596 5	596 5	596 5	650 5	650 5	619 5	619 5	619 5	619 5	619 5	619 5
@ 75/ DH Load	MW gross	586 5	586 5	586 5	685 9	685 9	640 4	640 4	640 4	640 4	640 4	640 4
@ Full DH Load	MW gross	550 5	550 5	550 5	640 5	640 5	595 5	595 5	595 5	595 5	595 5	595 5
Auxiliary power consumption	/	7 0/	7 0/	7 0%	7 0/	7 0/	7 0/	7 0/	7 0/	7 0%	7 0/	7 0/
@ Zero DH Load	MW net	468 7	468 7	468 7	538 5	538 5	538 5	538 5	538 5	538 5	538 5	538 5
@ 35/ DH Load	MW net	554 7	554 7	554 7	605 0	605 0	576 1	576 1	576 1	576 1	576 1	576 1
@ 75/ DH Load	MW net	545 4	545 4	545 4	637 9	637 9	595 6	595 6	595 6	595 6	595 6	595 6
@ Full DH Load	MW net	512 0	512 0	512 0	595 7	595 7	553 8	553 8	553 8	553 8	553 8	553 8
TES 1 CHP Plant DH/HW Rating												
@ Full DH Load (hot water only)	Gcal/hr	740 0	740 0	740 0	895 0	895 0	811 4	811 4	811 4	811 4	811 4	811 4
@ Full DH Load (total DH incl process steam)	Gcal/hr	1 151 8	1 151 8	1 151 8	1 306 8	1 306 8	1 219 8	1 219 8	1 219 8	1 219 8	1 219 8	1 219 8
TES 1 HOBs												
DH Capability Hot Water												
Unit #1	Gcal/hr	100 0	100 0	100 0	100 0	100 0	100 0	100 0	100 0	100 0	100 0	100 0
Unit #2	Gcal/hr	100 0	100 0	100 0	100 0	100 0	100 0	100 0	100 0	100 0	100 0	100 0
Unit #3	Gcal/hr	100.0	100.0	100.0	100.0	100.0	100 0	100.0	100.0	100 0	100 0	100.0
Total	Gcal/hr	300 0	300 0	300 0	300 0	300 0	300 0	300 0	300 0	300 0	300 0	300 0
Boiler Efficiencies												
Unit #1	/	87 0/	87 0/	87 0/	87 0/	87 0/	87 0/	87 0/	87 0/	87 0/	87 0/	87 0%
Unit #2	/	87 0/	87 0/	87 0/	87 0%	87 0/	87 0/	87 0/	87 0/	87 0/	87 0/	87 0/
Unit #3	%	87.0%	87.0%	87 0%	87 0%	87.0%	87 0%	87.0%	87 0%	87 0%	87.0%	87 0%
Weighted average	/	87 0/	87 0/	87 0/	87 0/	87 0/	87 0/	87 0/	87 0/	87 0/	87 0/	87 0/
TES 2 HOBs												
DH Capability Hot Water												
Unit #1	Gcal/hr	96 0	96 0	96 0	96 0	96 0	96 0	96 0	96 0	96 0	96 0	96 0
Unit #2	Gcal/hr	96.0	96.0	96 0	96.0	96.0	96 0	96.0	96 0	96.0	96.0	96 0
Total	Gcal/hr	192 0	192 0	192 0	192 0	192 0	192 0	192 0	192 0	192 0	192 0	192 0
Boiler Efficiencies												
Unit #1	/	87 0/	87 0/	87 0/	87 0/	87 0/	87 0/	87 0/	87 0/	87 0/	87 0/	87 0/
Unit #2	%	87 0%	87 0%	87 0/	87.0%	87 0%	87 0%	87 0%	87.0%	87 0%	87 0%	87 0%
Weighted average	/	87 0/	87 0/	87 0	87 0/	87 0/	87 0/	87 0/	87 0/	87 0/	87 0/	87 0/
Local DH System												
Frunze Unit #1	Gcal/hr	50 0	50 0	50 0	50 0	50 0	50 0	50 0	50 0	50 0	50 0	0 0
Frunze Unit #2	Gcal/hr	50 0	50 0	50 0	50 0	50 0	50 0	50 0	50 0	50 0	50 0	0 0
Frunze Unit #3	Gcal/hr	50 0	50 0	50 0	50 0	50 0	50 0	50 0	50 0	50 0	50 0	0 0
JAL Unit #1	Gcal/hr	20 0	20 0	20 0	20 0	20 0	20 0	20 0	20 0	20 0	20 0	20 0
JAL Unit #2	Gcal/hr	20 0	20 0	20 0	20 0	20 0	20 0	20 0	20 0	20 0	20 0	20 0
Total	Gcal/hr	190 0	190 0	190 0	190 0	190 0	190 0	190 0	190 0	190 0	190 0	40 0
Largest Unit	Gcal/hr	50 0	50 0	50 0	50 0	50 0	50 0	50 0	50 0	50 0	50 0	20 0
New capacity additions												
Mazut fired	Gcal/hr	0 0	0 0	0 0	0 0	0 0	0 0	0 0	0 0	50 0	0 0	0 0
Gas fired	Gcal/hr	0 0	0 0	0 0	0 0	0 0	0 0	0 0	0 0	0 0	0 0	150 0

Investment Schedules

Case Number 4 d DH Sensitivity

Summary of Investments

Study Year Calendar Year		1 1995	2 1996	3 1997	4 1998	5 1999	6 2000	7 2001	8 2002	9 2003	10 2004	11 2005
Capital Expenditure Schedules												
Investment in Electric and Thermal Energy Supply												
Bishkek DH System												
TES 1 CHP Plant Rehabilitation	$000	0 0	0 0	16 578 9	5 037 8	0 0	0 0	0 0	0 0	0 0	0 0	0 0
Installation of new additional HOBs	$000	0 0	0 0	0 0	0 0	0 0	0 0	0 0	0 0	0 0	0 0	0 0
Local DH System												
Installation of new additional HOBs	$000	0 0	0 0	0 0	0 0	0 0	0 0	0 0	0 0	0 0	0 0	0 0
Bishkek Electric Supply												
New GTCC#1 75 MWe(net)	$000	0 0	0 0	0 0	0 0	0 0	0 0	0 0	0 0	0 0	0 0	0 0
New TG for TES 1 83 7 MWe(net)	$000	0 0	0 0	0 0	0 0	0 0	0 0	0 0	0 0	0 0	0 0	0 0
Investment in Electric Energy Transmission & Distribution System												
Ala Archa220/110kV 200 MW grid uprating	$000	0 0	0 0	0 0	0 0	0 0	0 0	0 0	0 0	0 0	0 0	0 0
Investment in District Heating Distribution System												
District heating system upgrades rehab and modernization	$000	0 0	2 897 5	14 786 4	8 912 6	3 149 6	0 0	0 0	0 0	0 0	0 0	0 0
District heating system ugrades extension of HW network	$000	0 0	0 0	0 0	0 0	0 0	7 183 6	0 0	0 0	0 0	0 0	0 0
Rehabilitation of Steam Distribution Network	$000	0 0	0 0	0 0	0 0	0 0	0 0	0 0	0 0	0 0	0 0	0 0
TOTAL ANNUAL CAPITAL EXPENDITURE	$000	0 0	2 897 5	31 365 3	13 950 5	3 149 6	7 183 6	0 0	0 0	0 0	0 0	0 0
Debt Service Schedules												
Investment in Electric and Thermal Energy Supply												
Bishkek DH System												
TES 1 CHP Plant Rehabilitation	$000	0 0	0 0	0 0	3 286 3	4 284 9	4 284 9	4 284 9	4 284 9	4 284 9	4 284 9	4 284 9
Installation of new additional HOBs	$000	0 0	0 0	0 0	0 0	0 0	0 0	0 0	0 0	0 0	0 0	0 0
Local DH System												
Installation of new additional HOBs	$000	0 0	0 0	0 0	0 0	0 0	0 0	0 0	0 0	0 0	0 0	0 0
Bishkek Electric Supply												
New GTCC#1 75 MWe(net)	$000	0 0	0 0	0 0	0 0	0 0	0 0	0 0	0 0	0 0	0 0	0 0
New TG for TES 1 83 7 MWe(net)	$000	0 0	0 0	0 0	0 0	0 0	0 0	0 0	0 0	0 0	0 0	0 0
Investment in Electric Energy Transmission & Distribution System												
Ala Archa220/110kV 200 MW grid uprating	$000	0 0	0 0	0 0	0 0	0 0	0 0	0 0	0 0	0 0	0 0	0 0
Investment in District Heating Distribution System												
District heating system upgrades rehab and modernization	$000	0 0	0 0	574 4	3 505 3	5 272 0	5 896 3	5 896 3	5 896 3	5 896 3	5 896 3	5 896 3
District heating system ugrades extension of HW network	$000	0 0	0 0	0 0	0 0	0 0	0 0	1 423 9	1 423 9	1 423 9	1 423 9	1 423 9
Rehabilitation of Steam Distribution Network	$000	0 0	0 0	0 0	0 0	0 0	0 0	0 0	0 0	0 0	0 0	0 0
TOTAL ANNUAL INVESTMENT COSTS	$000	0 0	0 0	574 4	3 505 3	5 272 0	5 896 3	7 320 3	7 320 3	7 320 3	7 320 3	7 320 3

APPENDIX III

Buildup of Investment Schedules and Debt Service for:

- TES-1 CHP Plant Rehabilitation
- District Heating System Rehabilitation and Modernization
- District Heating System Extension
- New TG for TES-1 - 83 7 MWe (net)
- New Heat Only Boilers for Local System- Without Extension
- New Heat Only Boilers for Local System- With Extension

TES-1 CHP Plant Rehabilitation

Capital Investment Data Summary

Investment Description: TES 1 CHP Plant Rehabilitation

Economic and Financial Parameters

Capital cost real escalation rates		1995 2000	2001 2014
Western	/	0 0 /	0 0 /
Russian	/	0 0 /	0 0 /
Kyrgyz labor	/	16 9 /	6 6 /
Kyrgyz material	/	1 7 /	0 9 /
Kyrgyz equipment	/	1 5 /	3 2 /
Weighted Average Cost of Capital	/	12 0 /	
Physical contingencies	/	12 5 /	

Investment Summary

#	Description	Direct Costs Jan95 US$000	In service Year	Loan term
1	Furnace waterwall tube replacement, boilers 14 20	883 0	1998	10
2	Refractory insulation lagging etc refurbishment boilers 14 2	2 920 0	1999	10
3	Cost of TG11	2 275 0	1998	10
4	Commission TG11 and other turbine plant modifications	5 990 0	1998	10
5	I&C Upgrade Stage 1	566 0	1998	10
6	New Air Compressors	234 0	1998	10
7	I&C Upgrades Stage 2	770 0	1998	10
8	Install new rotary car dumpers	1 340 0	1998	10
9	Install emission monitors	1 800 0	1998	10
10	I&C Upgrades Stage 3	640 0	1999	10
11	I&C Upgrades Stage 4	308.0	1999	10
	Total investment	17 726 0		

Capital Expenditure Schedule (US$000) [see Note 1]

#	Description	1995	1996	1997	1998	1999	2000	2001	2002	2003	2004	2005
1	Furnace waterwall tube replacement, boilers 14 20	0 0	0 0	1 075 9	0 0	0 0	0 0	0 0	0 0	0 0	0 0	0 0
2	Refractory insulation lagging etc refurbishment, boilers 14 2	0 0	0 0	0 0	3 785 8	0 0	0 0	0 0	0 0	0 0	0 0	0 0
3	Cost of TG11	0 0	0 0	2 559 4	0 0	0 0	0 0	0 0	0 0	0 0	0 0	0 0
4	Commission TG11 and other turbine plant modifications	0 0	0 0	7 237 1	0 0	0 0	0 0	0 0	0 0	0 0	0 0	0 0
5	I&C Upgrade Stage 1	0 0	0 0	684 6	0 0	0 0	0 0	0 0	0 0	0 0	0 0	0 0
6	New Air Compressors	0 0	0 0	272 7	0 0	0 0	0 0	0 0	0 0	0 0	0 0	0 0
7	I&C Upgrades Stage 2	0 0	0 0	924 0	0 0	0 0	0 0	0 0	0 0	0 0	0 0	0 0
8	Install new rotary car dumpers	0 0	0 0	1 717 8	0 0	0 0	0 0	0 0	0 0	0 0	0 0	0 0
9	Install emission monitors	0 0	0 0	2 107 5	0 0	0 0	0 0	0 0	0 0	0 0	0 0	0 0
10	I&C Upgrades Stage 3	0 0	0 0	0 0	827 6	0 0	0 0	0 0	0 0	0 0	0 0	0 0
11	I&C Upgrades Stage 4	0.0	0.0	0.0	424.5	0.0	0.0	0.0	0.0	0.0	0.0	0.0
	Total annual draw-down	0 0	0 0	16 578 9	5 037 8	0 0	0 0	0 0	0 0	0 0	0 0	0 0

Investment Schedules (US$000) [see Note 2]

#	Description	1995	1996	1997	1998	1999	2000	2001	2002	2003	2004	2005
1	Furnace waterwall tube replacement boilers 14 20	0 0	0 0	0 0	1 205 0	0 0	0 0	0 0	0 0	0 0	0 0	0 0
2	Refractory insulation lagging etc refurbishment boilers 14 2	0 0	0 0	0 0	0 0	4 240 1	0 0	0 0	0 0	0 0	0 0	0 0
3	Cost of TG11	0 0	0 0	0 0	2 866 5	0 0	0 0	0 0	0 0	0 0	0 0	0 0
4	Commission TG11 and other turbine plant modifications	0 0	0 0	0 0	8 105 6	0 0	0 0	0 0	0 0	0 0	0 0	0 0
5	I&C Upgrade Stage 1	0 0	0 0	0 0	766 7	0 0	0 0	0 0	0 0	0 0	0 0	0 0
6	New Air Compressors	0 0	0 0	0 0	305 5	0 0	0 0	0 0	0 0	0 0	0 0	0 0
7	I&C Upgrades Stage 2	0 0	0 0	0 0	1 034 9	0 0	0 0	0 0	0 0	0 0	0 0	0 0
8	Install new rotary car dumpers	0 0	0 0	0 0	1 924 0	0 0	0 0	0 0	0 0	0 0	0 0	0 0
9	Install emission monitors	0 0	0 0	0 0	2 360 4	0 0	0 0	0 0	0 0	0 0	0 0	0 0
10	I&C Upgrades Stage 3	0 0	0 0	0 0	0 0	926 9	0 0	0 0	0 0	0 0	0 0	0 0
11	I&C Upgrades Stage 4	0.0	0.0	0.0	0.0	475 4	0.0	0.0	0.0	0.0	0.0	0.0
	Total loan amounts	0 0	0 0	0 0	18 568 4	5 642 4	0 0	0 0	0 0	0 0	0 0	0 0

Debt Service (US$000)

#	Description	1995	1996	1997	1998	1999	2000	2001	2002	2003	2004	2005	2006	2007	2008	2009	2010
1	Furnace waterwall tube replacement boilers 14 20	0 0	0 0	0 0	213 3	213 3	213 3	213 3	213 3	213 3	213 3	213 3	213 3	213 3	0 0	0 0	0 0
2	Refractory insulation lagging etc refurbishment boilers 14 2	0 0	0 0	0 0	0 0	750 4	750 4	750 4	750 4	750 4	750 4	750 4	750 4	750 4	750 4	0 0	0 0
3	Cost of TG11	0 0	0 0	0 0	507 3	507 3	507 3	507 3	507 3	507 3	507 3	507 3	507 3	507 3	0 0	0 0	0 0
4	Commission TG11 and other turbine plant modifications	0 0	0 0	0 0	1 434 6	1 434 6	1 434 6	1 434 6	1 434 6	1 434 6	1 434 6	1 434 6	1 434 6	1 434 6	0 0	0 0	0 0
5	I&C Upgrade Stage 1	0 0	0 0	0 0	135 7	135 7	135 7	135 7	135 7	135 7	135 7	135 7	135 7	135 7	0 0	0 0	0 0
6	New Air Compressors	0 0	0 0	0 0	54 1	54 1	54 1	54 1	54 1	54 1	54 1	54 1	54 1	54 1	0 0	0 0	0 0
7	I&C Upgrades Stage 2	0 0	0 0	0 0	183 2	183 2	183 2	183 2	183 2	183 2	183 2	183 2	183 2	183 2	0 0	0 0	0 0
8	Install new rotary car dumpers	0 0	0 0	0 0	340 5	340 5	340 5	340 5	340 5	340 5	340 5	340 5	340 5	340 5	0 0	0 0	0 0
9	Install emission monitors	0 0	0 0	0 0	417 7	417 7	417 7	417 7	417 7	417 7	417 7	417 7	417 7	417 7	0 0	0 0	0 0
10	I&C Upgrades Stage 3	0 0	0 0	0 0	0 0	164 0	164 0	164 0	164 0	164 0	164 0	164 0	164 0	164 0	164 0	0 0	0 0
11	I&C Upgrades Stage 4	0 0	0 0	0.0	0 0	84 1	84.1	84 1	84 1	84 1	84 1	84 1	84 1	84 1	84 1	0 0	0 0
	Total Repayment amounts	0 0	0 0	0 0	3 286 3	4 284 9	4 284 9	4 284 9	4 284 9	4 284 9	4 284 9	4 284 9	4 284 9	4 284 9	998 6	0 0	0 0

Notes

1 includes direct costs indirect costs Owner s costs contingency and real escalation
2 includes capital expenditure and interest during construction

603

2011	2012	2013	2014	2015	2016	2017	2018	2019
0 0	0 0	0 0	0 0	0 0	0 0	0 0	0 0	0 0
0 0	0 0	0 0	0 0	0 0	0 0	0 0	0 0	0 0
0 0	0 0	0 0	0 0	0 0	0 0	0 0	0 0	0 0
0 0	0 0	0 0	0 0	0 0	0 0	0 0	0 0	0 0
0 0	0 0	0 0	0 0	0 0	0 0	0 0	0 0	0 0
0 0	0 0	0 0	0 0	0 0	0 0	0 0	0 0	0 0
0 0	0 0	0 0	0 0	0 0	0 0	0 0	0 0	0 0
0 0	0 0	0 0	0 0	0 0	0 0	0 0	0 0	0 0
0 0	0 0	0 0	0 0	0 0	0 0	0 0	0 0	0 0
0 0	0 0	0 0	0 0	0 0	0 0	0 0	0 0	0 0
0.0	0.0	0 0	0 0	0.0	0.0	0 0	0.0	0 0
0 0	0 0	0 0	0 0	0 0	0 0	0 0	0 0	0 0

Investment Cost Input Sheet

Loan #		1
Investment Description		Furnace waterwall tube replacement, boilers 14 20
In-Service Year (ISY = year 0)	January 1	1998
Base Year for Capital Cost Estimates	January 1,	1995
Construction lead time	years	1
Useful life	years	15
Depreciation term	years	10
Loan repayment term	years	10

Overnight Capital Costs			Base Year		Installed Year
Component of Cost		Direct Costs	I,O &C Costs	Total Costs	Total Costs
Western equipment	US$000	683 0	85 4	768 4	768 4
Russian equipment	US$000	0 0	0 0	0 0	0 0
Kyrgyz labor	US$000	200 0	25 0	225 0	359 4
Kyrgyz material	US$000	0 0	0 0	0 0	0 0
Kyrgyz equipment	US$000	0 0	0 0	0 0	0 0
Total Overnight Capital Cost	US$000	883 0	110 4	993 4	1 127 8

Calculate Interest During Construction

Year of service		-1	1	2	3	4
Calendar year		1997	1998	1999	2000	2001
Capital Expenditure Schedule, % of Overnight Capital Cost		100 0%	0 0%	0 0%	0 0%	0 0%
Western equipment	US$000	768 4	0 0	0 0	0 0	0 0
Russian equipment	US$000	0 0	0 0	0 0	0 0	0 0
Kyrgyz labor	US$000	307 5	0 0	0 0	0 0	0 0
Kyrgyz material	US$000	0 0	0 0	0 0	0 0	0 0
Kyrgyz equipment	US$000	0 0	0 0	0 0	0 0	0 0
Total annual expenditure	US$000	1 075 9	0 0	0 0	0 0	0 0
Cumulative annual expenditure	US$000	1,075 9	0 0	0 0	0 0	0 0
Interest accrued	US$000	129 1	0 0	0 0	0 0	0 0
Cumulative Capitalized Cost	US$000	1,205 0	0 0	0 0	0 0	0 0
Total Capitalized Cost = Loan Amount	US$000	1,205 0				

Capital cost real escalation rates		1995 2000	2001 2014
Western	%	0 0%	0 0%
Russian	%	0 0%	0 0%
Kyrgyz labor	%	16 9%	6 6%
Kyrgyz material	%	1 7%	0 9%
Kyrgyz equipment	%	1 5%	3 2%
Weighted Average Cost of Capital	%	12 0%	
Indirect Costs Owner's Costs and Contingency	%	12 5%	

Investment Cost Input Sheet

Loan #		2
Investment Description		Refractory, insulation lagging etc refurbishment boilers 14-20
In-Service Year (ISY = year 0)	January 1,	1999
Base Year for Capital Cost Estimates	January 1,	1995
Construction lead time	years	1
Useful life	years	15
Depreciation term	years	10
Loan repayment term	years	10

Overnight Capital Costs			Base Year		Installed Year
Component of Cost		Direct Costs	I,O &C Costs	Total Costs	Total Costs
Western equipment	US$000	2,175 0	271 9	2 446 9	2 446 9
Russian equipment	US$000	0 0	0 0	0 0	0 0
Kyrgyz labor	US$000	745 0	93 1	838 1	1,565 2
Kyrgyz material	US$000	0 0	0 0	0 0	0 0
Kyrgyz equipment	US$000	0 0	0 0	0 0	0 0
Total Overnight Capital Cost	US$000	2,920 0	365 0	3,285 0	4,012 1

Calculate Interest During Construction

Year of service		-1	1	2	3	4
Calendar year		1998	1999	2000	2001	2002
Capital Expenditure Schedule, % of Overnight Capital Cost		100 0%	0 0%	0 0%	0 0%	0 0%
Western equipment	US$000	2,446 9	0 0	0 0	0 0	0 0
Russian equipment	US$000	0 0	0 0	0 0	0 0	0 0
Kyrgyz labor	US$000	1 338 9	0 0	0 0	0 0	0 0
Kyrgyz material	US$000	0 0	0 0	0 0	0 0	0 0
Kyrgyz equipment	US$000	0 0	0 0	0 0	0 0	0 0
Total annual expenditure	US$000	3,785 8	0 0	0 0	0 0	0 0
Cumulative annual expenditure	US$000	3 785 8	0 0	0 0	0 0	0 0
Interest accrued	US$000	454 3	0 0	0 0	0 0	0 0
Cumulative Capitalized Cost	US$000	4,240 1	0 0	0 0	0 0	0 0
Total Capitalized Cost = Loan Amount	US$000	4 240 1				

Capital cost real escalation rates		1995-2000	2001 2014
Western	%	0 0%	0 0%
Russian	%	0 0%	0 0%
Kyrgyz labor	%	16 9%	6 6%
Kyrgyz material	%	1 7%	0 9%
Kyrgyz equipment	%	1 5%	3 2%
Weighted Average Cost of Capital	%	12 0%	
Indirect Costs Owner's Costs and Contingency	%	12 5%	

Investment Cost Input Sheet

Loan #		3
Investment Description		Cost of TG11
In-Service Year (ISY = year 0)	January 1	1998
Base Year for Capital Cost Estimates	January 1,	1995
Construction lead time	years	1
Useful life	years	15
Depreciation term	years	10
Loan repayment term	years	10

Overnight Capital Costs			Base Year		Installed Year
Component of Cost		Direct Costs	I,O &C Costs	Total Costs	Total Costs
Western equipment	US$000	0 0	0 0	0 0	0 0
Russian equipment	US$000	2 275 0	284 4	2,559 4	2 559 4
Kyrgyz labor	US$000	0 0	0 0	0 0	0 0
Kyrgyz material	US$000	0 0	0 0	0 0	0 0
Kyrgyz equipment	US$000	0 0	0 0	0 0	0 0
Total Overnight Capital Cost	US$000	2,275 0	284 4	2 559 4	2,559 4

Calculate Interest During Construction

Year of service		-1	1	2	3	4
Calendar year		1997	1998	1999	2000	2001
Capital Expenditure Schedule, % of Overnight Capital Cost		100 0%	0 0%	0 0%	0 0%	0 0%
Western equipment	US$000	0 0	0 0	0 0	0 0	0 0
Russian equipment	US$000	2 559 4	0 0	0 0	0 0	0 0
Kyrgyz labor	US$000	0 0	0 0	0 0	0 0	0 0
Kyrgyz material	US$000	0 0	0 0	0 0	0 0	0 0
Kyrgyz equipment	US$000	0.0	0 0	0 0	0 0	0 0
Total annual expenditure	US$000	2,559 4	0 0	0 0	0 0	0 0
Cumulative annual expenditure	US$000	2,559 4	0 0	0 0	0 0	0 0
Interest accrued	US$000	307 1	0 0	0 0	0 0	0 0
Cumulative Capitalized Cost	US$000	2 866 5	0 0	0 0	0 0	0 0
Total Capitalized Cost = Loan Amount	US$000	2 866 5				

Capital cost real escalation rates		1995 2000	2001-2014
Western	%	0 0%	0 0%
Russian	%	0 0%	0 0%
Kyrgyz labor	%	16 9%	6 6%
Kyrgyz material	%	1 7%	0 9%
Kyrgyz equipment	%	1 5%	3 2%
Weighted Average Cost of Capital	%	12 0%	
Indirect Costs Owner s Costs and Contingency	%	12 5%	

Investment Cost Input Sheet

Loan #		4
Investment Description		Commission TG11 and other turbine plant modifications
In Service Year (ISY = year 0)	January 1	1998
Base Year for Capital Cost Estimates	January 1	1995
Construction lead time	years	1
Useful life	years	15
Depreciation term	years	10
Loan repayment term	years	10

Overnight Capital Costs			Base Year		Installed Year
Component of Cost		Direct Costs	I,O &C Costs	Total Costs	Total Costs
Western equipment	US$000	280 0	35 0	315 0	315 0
Russian equipment	US$000	4 245 0	530 6	4,775 6	4 775 6
Kyrgyz labor	US$000	1 182 0	147 8	1,329 8	2 124 3
Kyrgyz material	US$000	283 0	35 4	318 4	334 9
Kyrgyz equipment	US$000	0 0	0 0	0 0	0 0
Total Overnight Capital Cost	US$000	5,990 0	748 8	6,738 8	7,549 8

Calculate Interest During Construction

Year of service		-1	1	2	3	4
Calendar year		1997	1998	1999	2000	2001
Capital Expenditure Schedule, % of Overnight Capital Cost		100 0%	0 0%	0 0%	0 0%	0 0%
Western equipment	US$000	315 0	0 0	0 0	0 0	0 0
Russian equipment	US$000	4,775 6	0 0	0 0	0 0	0 0
Kyrgyz labor	US$000	1 817 2	0 0	0 0	0 0	0 0
Kyrgyz material	US$000	329 3	0 0	0 0	0 0	0 0
Kyrgyz equipment	US$000	0 0	0 0	0 0	0 0	0 0
Total annual expenditure	US$000	7,237 1	0 0	0 0	0 0	0 0
Cumulative annual expenditure	US$000	7 237 1	0 0	0 0	0 0	0 0
Interest accrued	US$000	868 5	0 0	0 0	0 0	0 0
Cumulative Capitalized Cost	US$000	8 105 6	0 0	0 0	0 0	0 0
Total Capitalized Cost = Loan Amount	US$000	8 105 6				

Capital cost real escalation rates		1995-2000	2001 2014
Western	%	0 0%	0 0%
Russian	%	0 0%	0 0%
Kyrgyz labor	%	16 9%	6 6%
Kyrgyz material	%	1 7%	0 9%
Kyrgyz equipment	%	1 5%	3 2%
Weighted Average Cost of Capital	%	12 0%	
Indirect Costs Owner's Costs and Contingency	%	12 5%	

Investment Cost Input Sheet

Loan #		5
Investment Description		I&C Upgrade Stage 1
In-Service Year (ISY = year 0)	January 1	1998
Base Year for Capital Cost Estimates	January 1	1995
Construction lead time	years	1
Useful life	years	15
Depreciation term	years	10
Loan repayment term	years	10

Overnight Capital Costs			Base Year		Installed Year
Component of Cost		Direct Costs	I,O &C Costs	Total Costs	Total Costs
Western equipment	US$000	450 0	56 3	506 3	506 3
Russian equipment	US$000	0 0	0 0	0 0	0 0
Kyrgyz labor	US$000	116 0	14 5	130 5	208 5
Kyrgyz material	US$000	0 0	0 0	0 0	0 0
Kyrgyz equipment	US$000	0 0	0 0	0 0	0 0
Total Overnight Capital Cost	US$000	566 0	70 8	636 8	714 7

Calculate Interest During Construction

Year of service		1	1	2	3	4
Calendar year		1997	1998	1999	2000	2001
Capital Expenditure Schedule % of Overnight Capital Cost		100 0%	0 0%	0 0%	0 0%	0 0%
Western equipment	US$000	506 3	0 0	0 0	0 0	0 0
Russian equipment	US$000	0 0	0 0	0 0	0 0	0 0
Kyrgyz labor	US$000	178 3	0 0	0 0	0 0	0 0
Kyrgyz material	US$000	0 0	0 0	0 0	0 0	0 0
Kyrgyz equipment	US$000	0 0	0 0	0 0	0 0	0 0
Total annual expenditure	US$000	684 6	0 0	0 0	0 0	0 0
Cumulative annual expenditure	US$000	684 6	0 0	0 0	0 0	0 0
Interest accrued	US$000	82 2	0 0	0 0	0 0	0 0
Cumulative Capitalized Cost	US$000	766 7	0 0	0 0	0 0	0 0
Total Capitalized Cost = Loan Amount	US$000	766 7				

Capital cost real escalation rates		1995-2000	2001 2014
Western	%	0 0%	0 0%
Russian	%	0 0%	0 0%
Kyrgyz labor	%	16 9%	6 6%
Kyrgyz material	%	1 7%	0 9%
Kyrgyz equipment	%	1 5%	3 2%
Weighted Average Cost of Capital	%	12 0%	
Indirect Costs Owner s Costs and Contingency	%	12 5%	

Investment Cost Input Sheet

Loan #		6
Investment Description		New Air Compressors
In-Service Year (ISY = year 0)	January 1,	1998
Base Year for Capital Cost Estimates	January 1	1995
Construction lead time	years	1
Useful life	years	15
Depreciation term	years	10
Loan repayment term	years	10

Overnight Capital Costs			Base Year		Installed Year
Component of Cost		Direct Costs	I O &C Costs	Total Costs	Total Costs
Western equipment	US$000	211 0	26 4	237 4	237 4
Russian equipment	US$000	0 0	0 0	0 0	0 0
Kyrgyz labor	US$000	23 0	2 9	25 9	41 3
Kyrgyz material	US$000	0 0	0 0	0 0	0 0
Kyrgyz equipment	US$000	0 0	0 0	0 0	0 0
Total Overnight Capital Cost	US$000	234 0	29 3	263 3	278 7

Calculate Interest During Construction

Year of service		-1	1	2	3	4
Calendar year		1997	1998	1999	2000	2001
Capital Expenditure Schedule % of Overnight Capital Cost		100 0%	0 0%	0 0%	0 0%	0 0%
Western equipment	US$000	237 4	0 0	0 0	0 0	0 0
Russian equipment	US$000	0 0	0 0	0 0	0 0	0 0
Kyrgyz labor	US$000	35 4	0 0	0 0	0 0	0 0
Kyrgyz material	US$000	0 0	0 0	0 0	0 0	0 0
Kyrgyz equipment	US$000	0 0	0 0	0 0	0 0	0 0
Total annual expenditure	US$000	272 7	0 0	0 0	0 0	0 0
Cumulative annual expenditure	US$000	272 7	0 0	0 0	0 0	0 0
Interest accrued	US$000	32 7	0 0	0 0	0 0	0 0
Cumulative Capitalized Cost	US$000	305 5	0 0	0 0	0 0	0 0
Total Capitalized Cost = Loan Amount	US$000	305 5				

Capital cost real escalation rates		1995 2000	2001 2014
Western	%	0 0%	0 0%
Russian	%	0 0%	0 0%
Kyrgyz labor	%	16 9%	6 6%
Kyrgyz material	%	1 7%	0 9%
Kyrgyz equipment	%	1 5%	3 2%
Weighted Average Cost of Capital	%	12 0%	
Indirect Costs Owner's Costs and Contingency	%	12 5%	

Investment Cost Input Sheet

Loan #		7
Investment Description		I&C Upgrades Stage 2
In-Service Year (ISY = year 0)	January 1,	1998
Base Year for Capital Cost Estimates	January 1	1995
Construction lead time	years	1
Useful life	years	15
Depreciation term	years	10
Loan repayment term	years	10

Overnight Capital Costs			Base Year		Installed Year
Component of Cost		Direct Costs	I,O &C Costs	Total Costs	Total Costs
Western equipment	US$000	630 0	78 8	708 8	708 8
Russian equipment	US$000	0 0	0 0	0 0	0 0
Kyrgyz labor	US$000	140 0	17 5	157 5	251 6
Kyrgyz material	US$000	0 0	0 0	0 0	0 0
Kyrgyz equipment	US$000	0 0	0 0	0 0	0 0
Total Overnight Capital Cost	US$000	770 0	96 3	866 3	960 4

Calculate Interest During Construction

Year of service		-1	1	2	3	4
Calendar year		1997	1998	1999	2000	2001
Capital Expenditure Schedule, % of Overnight Capital Cost		100 0%	0 0%	0 0%	0 0%	0 0%
Western equipment	US$000	708 8	0 0	0 0	0 0	0 0
Russian equipment	US$000	0 0	0 0	0 0	0 0	0 0
Kyrgyz labor	US$000	215 2	0 0	0 0	0 0	0 0
Kyrgyz material	US$000	0 0	0 0	0 0	0 0	0 0
Kyrgyz equipment	US$000	0 0	0 0	0 0	0 0	0 0
Total annual expenditure	US$000	924 0	0 0	0 0	0 0	0 0
Cumulative annual expenditure	US$000	924 0	0 0	0 0	0 0	0 0
Interest accrued	US$000	110 9	0 0	0 0	0 0	0 0
Cumulative Capitalized Cost	US$000	1,034 9	0 0	0 0	0 0	0 0
Total Capitalized Cost = Loan Amount	US$000	1 034 9				

Capital cost real escalation rates		1995 2000	2001 2014
Western	%	0 0%	0 0%
Russian	%	0 0%	0 0%
Kyrgyz labor	%	16 9%	6 6%
Kyrgyz material	%	1 7%	0 9%
Kyrgyz equipment	%	1 5%	3 2%
Weighted Average Cost of Capital	%	12 0%	
Indirect Costs Owner s Costs and Contingency	%	12 5%	

Investment Cost Input Sheet

Loan #		8
Investment Description		Install new rotary car dumpers
In Service Year (ISY = year 0)	January 1	1998
Base Year for Capital Cost Estimates	January 1	1995
Construction lead time	years	1
Useful life	years	15
Depreciation term	years	10
Loan repayment term	years	10

Overnight Capital Costs			Base Year		Installed Year
Component of Cost		Direct Costs	I,O &C Costs	Total Costs	Total Costs
Western equipment	US$000	830 0	103 8	933 8	933 8
Russian equipment	US$000	0 0	0 0	0 0	0 0
Kyrgyz labor	US$000	510 0	63 8	573 8	916 6
Kyrgyz material	US$000	0 0	0 0	0 0	0 0
Kyrgyz equipment	US$000	0 0	0 0	0 0	0 0
Total Overnight Capital Cost	US$000	1,340 0	167 5	1 507 5	1,850 3

Calculate Interest During Construction

Year of service		-1	1	2	3	4
Calendar year		1997	1998	1999	2000	2001
Capital Expenditure Schedule % of Overnight Capital Cost		100 0%	0 0%	0 0%	0 0%	0 0%
Western equipment	US$000	933 8	0 0	0 0	0 0	0 0
Russian equipment	US$000	0 0	0 0	0 0	0 0	0 0
Kyrgyz labor	US$000	784 1	0 0	0 0	0 0	0 0
Kyrgyz material	US$000	0 0	0 0	0 0	0 0	0 0
Kyrgyz equipment	US$000	0 0	0 0	0 0	0 0	0 0
Total annual expenditure	US$000	1 717 8	0 0	0 0	0 0	0 0
Cumulative annual expenditure	US$000	1 717 8	0 0	0 0	0 0	0 0
Interest accrued	US$000	206 1	0 0	0 0	0 0	0 0
Cumulative Capitalized Cost	US$000	1 924 0	0 0	0 0	0 0	0 0
Total Capitalized Cost = Loan Amount	US$000	1 924 0				

Capital cost real escalation rates		1995 2000	2001-2014
Western	%	0 0%	0 0%
Russian	%	0 0%	0 0%
Kyrgyz labor	%	16 9%	6 6%
Kyrgyz material	%	1 7%	0 9%
Kyrgyz equipment	%	1 5%	3 2%
Weighted Average Cost of Capital	%	12 0%	
Indirect Costs Owner s Costs and Contingency	%	12 5%	

Investment Cost Input Sheet

Loan #		9
Investment Description		Install emission monitors
In Service Year (ISY = year 0)	January 1,	1998
Base Year for Capital Cost Estimates	January 1,	1995
Construction lead time	years	1
Useful life	years	15
Depreciation term	years	10
Loan repayment term	years	10

Overnight Capital Costs			Base Year		Installed Year
Component of Cost		Direct Costs	I O &C Costs	Total Costs	Total Costs
Western equipment	US$000	1,600 0	200 0	1 800 0	1,800 0
Russian equipment	US$000	0 0	0 0	0 0	0 0
Kyrgyz labor	US$000	200 0	25 0	225 0	359 4
Kyrgyz material	US$000	0 0	0 0	0 0	0 0
Kyrgyz equipment	US$000	0 0	0 0	0 0	0 0
Total Overnight Capital Cost	US$000	1,800 0	225 0	2,025 0	2 159 4

Calculate Interest During Construction

Year of service		-1	1	2	3	4
Calendar year		1997	1998	1999	2000	2001
Capital Expenditure Schedule, % of Overnight Capital Cost		100 0%	0 0%	0 0%	0 0%	0 0%
Western equipment	US$000	1,800 0	0 0	0 0	0 0	0 0
Russian equipment	US$000	0 0	0 0	0 0	0 0	0 0
Kyrgyz labor	US$000	307 5	0 0	0 0	0 0	0 0
Kyrgyz material	US$000	0 0	0 0	0 0	0 0	0 0
Kyrgyz equipment	US$000	0 0	0 0	0 0	0 0	0 0
Total annual expenditure	US$000	2,107 5	0 0	0 0	0 0	0 0
Cumulative annual expenditure	US$000	2,107 5	0 0	0 0	0 0	0 0
Interest accrued	US$000	252 9	0 0	0 0	0 0	0 0
Cumulative Capitalized Cost	US$000	2,360 4	0 0	0 0	0 0	0 0
Total Capitalized Cost = Loan Amount	US$000	2 360 4				

Capital cost real escalation rates		1995 2000	2001-2014
Western	%	0 0%	0 0%
Russian	%	0 0%	0 0%
Kyrgyz labor	%	16 9%	6 6%
Kyrgyz material	%	1 7%	0 9%
Kyrgyz equipment	%	1 5%	3 2%
Weighted Average Cost of Capital	%	12 0%	
Indirect Costs, Owner s Costs and Contingency	%	12 5%	

Investment Cost Input Sheet

Loan #		10
Investment Description		I&C Upgrades Stage 3
In-Service Year (ISY = year 0)	January 1	1999
Base Year for Capital Cost Estimates	January 1	1995
Construction lead time	years	1
Useful life	years	15
Depreciation term	years	10
Loan repayment term	years	10

Overnight Capital Costs			Base Year		Installed Year
Component of Cost		Direct Costs	I,O &C Costs	Total Costs	Total Costs
Western equipment	US$000	480 0	60 0	540 0	540 0
Russian equipment	US$000	0 0	0 0	0 0	0 0
Kyrgyz labor	US$000	160 0	20 0	180 0	336 1
Kyrgyz material	US$000	0 0	0 0	0 0	0 0
Kyrgyz equipment	US$000	0 0	0 0	0 0	0 0
Total Overnight Capital Cost	US$000	640 0	80 0	720 0	876 1

Calculate Interest During Construction

Year of service		-1	1	2	3	4
Calendar year		1998	1999	2000	2001	2002
Capital Expenditure Schedule % of Overnight Capital Cost		100 0%	0 0%	0 0%	0 0%	0 0%
Western equipment	US$000	540 0	0 0	0 0	0 0	0 0
Russian equipment	US$000	0 0	0 0	0 0	0 0	0 0
Kyrgyz labor	US$000	287 6	0 0	0 0	0 0	0 0
Kyrgyz material	US$000	0 0	0 0	0 0	0 0	0 0
Kyrgyz equipment	US$000	0 0	0 0	0 0	0 0	0 0
Total annual expenditure	US$000	827 6	0 0	0 0	0 0	0 0
Cumulative anpual expenditure	US$000	827 6	0 0	0 0	0 0	0 0
Interest accrued	US$000	99 3	0 0	0 0	0 0	0 0
Cumulative Capitalized Cost	US$000	926 9	0 0	0 0	0 0	0 0
Total Capitalized Cost = Loan Amount	US$000	926 9				

Capital cost real escalation rates		1995 2000	2001-2014
Western	%	0 0%	0 0%
Russian	%	0 0%	0 0%
Kyrgyz labor	%	16 9%	6 6%
Kyrgyz material	%	1 7%	0 9%
Kyrgyz equipment	%	1 5%	3 2%
Weighted Average Cost of Capital	%	12 0%	
Indirect Costs Owner's Costs and Contingency	%	12 5%	

Investment Cost Input Sheet

Loan #		11
Investment Description		I&C Upgrades Stage 4
In-Service Year (ISY = year 0)	January 1,	1999
Base Year for Capital Cost Estimates	January 1	1995
Construction lead time	years	1
Useful life	years	15
Depreciation term	years	10
Loan repayment term	years	10

Overnight Capital Costs Component of Cost		Direct Costs	Base Year I,O &C Costs	Total Costs	Installed Year Total Costs
Western equipment	US$000	192 0	24 0	216 0	216 0
Russian equipment	US$000	0 0	0 0	0 0	0 0
Kyrgyz labor	US$000	116 0	14 5	130 5	243 7
Kyrgyz material	US$000	0 0	0 0	0 0	0 0
Kyrgyz equipment	US$000	0 0	0 0	0 0	0 0
Total Overnight Capital Cost	US$000	308 0	38 5	346 5	459 7

Calculate Interest During Construction

Year of service		-1	1	2	3	4
Calendar year		1998	1999	2000	2001	2002
Capital Expenditure Schedule % of Overnight Capital Cost		100 0%	0 0%	0 0%	0 0%	0 0%
Western equipment	US$000	216 0	0 0	0 0	0 0	0 0
Russian equipment	US$000	0 0	0 0	0 0	0 0	0 0
Kyrgyz labor	US$000	208 5	0 0	0 0	0 0	0 0
Kyrgyz material	US$000	0 0	0 0	0 0	0 0	0 0
Kyrgyz equipment	US$000	0 0	0.0	0 0	0 0	0 0
Total annual expenditure	US$000	424 5	0 0	0 0	0 0	0 0
Cumulative annual expenditure	US$000	424 5	0 0	0 0	0 0	0 0
Interest accrued	US$000	50 9	0 0	0 0	0 0	0 0
Cumulative Capitalized Cost	US$000	475 4	0 0	0 0	0 0	0 0
Total Capitalized Cost = Loan Amount	US$000	475 4				

Capital cost real escalation rates		1995 2000	2001-2014
Western	%	0 0%	0 0%
Russian	%	0 0%	0 0%
Kyrgyz labor	%	16 9%	6 6%
Kyrgyz material	%	1 7%	0 9%
Kyrgyz equipment	%	1 5%	3 2%
Weighted Average Cost of Capital	%	12 0%	
Indirect Costs Owner's Costs and Contingency	%	12 5%	

District Heating System Rehabilitation and Modernization

Capital Investment Data Summary

Investment Description: District Heating System Modernization and Rehabilitation

Economic and Financial Parameters

		1995 2000	2001 2014
Capital cost real escalation rates			
Western		0 0/	0 0/
Russian	/	0 0/	0 0/
Kyrgyz labor	/	16 9/	6 6/
Kyrgyz material	/	1 7/	0 9/
Kyrgyz equipment	/	1 5/	3 2/
Weighted Average Cost of Capital	/	12 0/	
Physical contingencies	/	12 5/	

Investment Summary

#	Description	Direct Costs Jan95 US$000	In service Year	Loan term
1	1996 Underground and Aerial Pipeline Rehabilitation	947 0	1997	10
2	1997 Underground and Aerial Pipeline Rehabilitation	6 395 0	1998	10
3	1998 Underground and Aerial Pipeline Rehabilitation	4 200 0	1999	10
4	1999 Underground and Aerial Pipeline Rehabilitation	1 958 0	2000	10
5	1996 Expenditure enabling Variable Flow Operation (VFO)	645 0	1997	10
6	1997 Expenditure enabling VFO Controls & Regulation Syste	1 305 0	1998	10
7	1996 Substation Investment	948 0	1997	10
8	1997 Substation Investment	4 974 5	1998	10
9	1998 Substation Investment	3 240 0	1999	10
10	1999 Substation Investment	587 5	2000	10
11	n/a	0.0	2000	10
	Total investment	25 200 0		

Capital Expenditure Schedule (US$000) [see Note 1]

#	Description	1995	1996	1997	1998	1999	2000	2001	2002	2003	2004	2005
1	1996 Underground and Aerial Pipeline Rehabilitation	0 0	1 088 3	0 0	0 0	0 0	0 0	0 0	0 0	0 0	0 0	0 0
2	1997 Underground and Aerial Pipeline Rehabilitation	0 0	0 0	7 526 1	0 0	0 0	0 0	0 0	0 0	0 0	0 0	0 0
3	1998 Underground and Aerial Pipeline Rehabilitation	0 0	0 0	0 0	5 076 1	0 0	0 0	0 0	0 0	0 0	0 0	0 0
4	1999 Underground and Aerial Pipeline Rehabilitation	0 0	0 0	0 0	0 0	2 437 4	0 0	0 0	0 0	0 0	0 0	0 0
5	1996 Expenditure enabling Variable Flow Operation (VFO)	0 0	727 0	0 0	0 0	0 0	0 0	0 0	0 0	0 0	0 0	0 0
6	1997 Expenditure enabling VFO Controls & Regulation Syste	0 0	0 0	1 483 6	0 0	0 0	0 0	0 0	0 0	0 0	0 0	0 0
7	1996 Substation Investment	0 0	1 082 3	0 0	0 0	0 0	0 0	0 0	0 0	0 0	0 0	0 0
8	1997 Substation Investment	0 0	0 0	5 776 7	0 0	0 0	0 0	0 0	0 0	0 0	0 0	0 0
9	1998 Substation Investment	0 0	0 0	0 0	3 836 6	0 0	0 0	0 0	0 0	0 0	0 0	0 0
10	1999 Substation Investment	0 0	0 0	0 0	0 0	712 2	0 0	0 0	0 0	0 0	0 0	0 0
11	n/a	0.0	0.0	0.0	0.0	0 0	0.0	0.0	0.0	0.0	0.0	0.0
	Total annual draw-down	0 0	2 897 5	14 786 4	8 912 6	3 149 6	0 0	0 0	0 0	0 0	0 0	0 0

Investment Schedules (US$000) [see Note 2]

#	Description	1995	1996	1997	1998	1999	2000	2001	2002	2003	2004	2005
1	1996 Underground and Aerial Pipeline Rehabilitation	0 0	0 0	1 218 9	0 0	0 0	0 0	0 0	0 0	0 0	0 0	0 0
2	1997 Underground and Aerial Pipeline Rehabilitation	0 0	0 0	0 0	8 429 2	0 0	0 0	0 0	0 0	0 0	0 0	0 0
3	1998 Underground and Aerial Pipeline Rehabilitation	0 0	0 0	0 0	0 0	5 685 2	0 0	0 0	0 0	0 0	0 0	0 0
4	1999 Underground and Aerial Pipeline Rehabilitation	0 0	0 0	0 0	0 0	0 0	2 729 9	0 0	0 0	0 0	0 0	0 0
5	1996 Expenditure enabling Variable Flow Operation (VFO)	0 0	0 0	814 2	0 0	0 0	0 0	0 0	0 0	0 0	0 0	0 0
6	1997 Expenditure enabling VFO Controls & Regulation Syste	0 0	0 0	0 0	1 661 6	0 0	0 0	0 0	0 0	0 0	0 0	0 0
7	1996 Substation Investment	0 0	0 0	1 212 2	0 0	0 0	0 0	0 0	0 0	0 0	0 0	0 0
8	1997 Substation Investment	0 0	0 0	0 0	6 469 9	0 0	0 0	0 0	0 0	0 0	0 0	0 0
9	1998 Substation Investment	0 0	0 0	0 0	0 0	4 297 0	0 0	0 0	0 0	0 0	0 0	0 0
10	1999 Substation Investment	0 0	0 0	0 0	0 0	0 0	797 6	0 0	0 0	0 0	0 0	0 0
11	n/a	0.0	0 0	0.0	0 0	0 0	0.0	0.0	0.0	0.0	0.0	0.0
	Total loan amounts	0 0	0 0	3 245 2	16 560 7	9 982 2	3 527 5	0 0	0 0	0 0	0 0	0 0

Debt Service (US$000)

#	Description	1995	1996	1997	1998	1999	2000	2001	2002	2003	2004	2005	2006	2007	2008	2009	2010
1	1996 Underground and Aerial Pipeline Rehabilitation	0 0	0 0	215 7	215 7	215 7	215 7	215 7	215 7	215 7	215 7	215 7	215 7	0 0	0 0	0 0	0 0
2	1997 Underground and Aerial Pipeline Rehabilitation	0 0	0 0	0 0	1 491 8	1 491 8	1 491 8	1 491 8	1 491 8	1 491 8	1 491 8	1 491 8	1 491 8	1 491 8	0 0	0 0	0 0
3	1998 Underground and Aerial Pipeline Rehabilitation	0 0	0 0	0 0	0 0	1 006 2	1 006 2	1 006 2	1 006 2	1 006 2	1 006 2	1 006 2	1 006 2	1 006 2	1 006 2	0 0	0 0
4	1999 Underground and Aerial Pipeline Rehabilitation	0 0	0 0	0 0	0 0	0 0	483 1	483 1	483 1	483 1	483 1	483 1	483 1	483 1	483 1	483 1	0 0
5	1996 Expenditure enabling Variable Flow Operation (VFO)	0 0	0 0	144 1	144 1	144 1	144 1	144 1	144 1	144 1	144 1	144 1	144 1	0 0	0 0	0 0	0 0
6	1997 Expenditure enabling VFO Controls & Regulation Syste	0 0	0 0	0 0	294 1	294 1	294 1	294 1	294 1	294 1	294 1	294 1	294 1	294 1	0 0	0 0	0 0
7	1996 Substation Investment	0 0	0 0	214 5	214 5	214 5	214 5	214 5	214 5	214 5	214 5	214 5	214 5	0 0	0 0	0 0	0 0
8	1997 Substation Investment	0 0	0 0	0 0	1 145 1	1 145 1	1 145 1	1 145 1	1 145 1	1 145 1	1 145 1	1 145 1	1 145 1	1 145 1	0 0	0 0	0 0
9	1998 Substation Investment	0 0	0 0	0 0	0 0	760 5	760 5	760 5	760 5	760 5	760 5	760 5	760 5	760 5	760 5	0 0	0 0
10	1999 Substation Investment	0 0	0 0	0 0	0 0	0 0	141 2	141 2	141 2	141 2	141 2	141 2	141 2	141 2	141 2	141 2	0 0
11	n/a	0 0	0 0	0 0	0 0	0 0	0 0	0 0	0 0	0 0	0 0	0 0	0 0	0 0	0 0	0 0	0.0
	Total Repayment amounts	0 0	0 0	574 4	3 505 3	5 272 0	5 896 3	5 896 3	5 896 3	5 896 3	5 896 3	5 896 3	5 896 3	5 322 0	2 391 0	624 3	0 0

Notes

1 includes direct costs indirect costs Owner s costs contingency and real escalation
2 includes capital expenditure and interest during construction

2011	2012	2013	2014	2015	2016	2017	2018	2019
0 0	0 0	0 0	0 0	0 0	0 0	0 0	0 0	0 0
0 0	0 0	0 0	0 0	0 0	0 0	0 0	0 0	0 0
0 0	0 0	0 0	0 0	0 0	0 0	0 0	0 0	0 0
0 0	0 0	0 0	0 0	0 0	0 0	0 0	0 0	0 0
0 0	0 0	0 0	0 0	0 0	0 0	0 0	0 0	0 0
0 0	0 0	0 0	0 0	0 0	0 0	0 0	0 0	0 0
0 0	0 0	0 0	0 0	0 0	0 0	0 0	0 0	0 0
0 0	0 0	0 0	0 0	0 0	0 0	0 0	0 0	0 0
0 0	0 0	0 0	0 0	0 0	0 0	0 0	0 0	0 0
0 0	0 0	0 0	0 0	0 0	0 0	0 0	0 0	0 0
0 0	0 0	0 0	0 0	0 0	0 0	0 0	0 0	0 0
0 0	0 0	0 0	0 0	0 0	0 0	0 0	0 0	0 0

Investment Cost Input Sheet

Loan #		1
Investment Description		1996 Underground and Aerial Pipeline Rehabilitation
In-Service Year (ISY = year 0)	January 1,	1997
Base Year for Capital Cost Estimates	January 1	1995
Construction lead time	years	1
Useful life	years	35
Depreciation term	years	10
Loan repayment term	years	10

Overnight Capital Costs Component of Cost		Direct Costs	Base Year I O &C Costs	Total Costs	Installed Year Total Costs
Western equipment	US$000	646 0	80 8	726 8	726 8
Russian equipment	US$000	0 0	0 0	0 0	0 0
Kyrgyz labor	US$000	100 4	12 6	113 0	154 4
Kyrgyz material	US$000	200 6	25 1	225 7	233 4
Kyrgyz equipment	US$000	0 0	0 0	0 0	0.0
Total Overnight Capital Cost	US$000	947 0	118 4	1,065 4	1,114 5

Calculate Interest During Construction

Year of service		-1	1	2	3	4
Calendar year		1996	1997	1998	1999	2000
Capital Expenditure Schedule, % of Overnight Capital Cost		100 0%	0 0%	0 0%	0 0%	0 0%
Western equipment	US$000	726 8	0 0	0 0	0 0	0 0
Russian equipment	US$000	0 0	0 0	0 0	0 0	0 0
Kyrgyz labor	US$000	132 0	0 0	0 0	0 0	0 0
Kyrgyz material	US$000	229 5	0 0	0 0	0 0	0 0
Kyrgyz equipment	US$000	0 0	0 0	0 0	0 0	0 0
Total annual expenditure	US$000	1,088 3	0 0	0 0	0 0	0 0
Cumulative annual expenditure	US$000	1,088 3	0 0	0 0	0 0	0 0
Interest accrued	US$000	130 6	0 0	0 0	0 0	0 0
Cumulative Capitalized Cost	US$000	1 218 9	0 0	0 0	0 0	0 0
Total Capitalized Cost = Loan Amount	US$000	1 218 9				

Capital cost real escalation rates		1995 2000	2001-2014
Western	%	0 0%	0 0%
Russian	%	0 0%	0 0%
Kyrgyz labor	%	16 9%	6 6%
Kyrgyz material	%	1 7%	0 9%
Kyrgyz equipment	%	1 5%	3 2%
Weighted Average Cost of Capital	%	12 0%	
Indirect Costs Owner's Costs and Contingency	%	12 5%	

Investment Cost Input Sheet

Loan #		2
Investment Description		1997 Underground and Aerial Pipeline Rehabilitation
In Service Year (ISY = year 0)	January 1	1998
Base Year for Capital Cost Estimates	January 1,	1995
Construction lead time	years	1
Useful life	years	35
Depreciation term	years	10
Loan repayment term	years	10

Overnight Capital Costs Component of Cost		Direct Costs	Base Year O &C Costs	Total Costs	Installed Year Total Costs
Western equipment	US$000	4 361 8	545 2	4 907 0	4,907 0
Russian equipment	US$000	0 0	0 0	0 0	0 0
Kyrgyz labor	US$000	677 5	84 7	762 2	1,217 6
Kyrgyz material	US$000	1 355 8	169 5	1,525 2	1 604 3
Kyrgyz equipment	US$000	0 0	0 0	0 0	0 0
Total Overnight Capital Cost	US$000	6,395 0	799 4	7,194 4	7,728 9

Calculate Interest During Construction

Year of service		1	1	2	3	4
Calendar year		1997	1998	1999	2000	2001
Capital Expenditure Schedule % of Overnight Capital Cost		100 0%	0 0%	0 0%	0 0%	0 0%
Western equipment	US$000	4,907 0	0 0	0 0	0 0	0 0
Russian equipment	US$000	0 0	0 0	0 0	0 0	0 0
Kyrgyz labor	US$000	1 041 6	0 0	0 0	0 0	0 0
Kyrgyz material	US$000	1,577 5	0 0	0 0	0 0	0 0
Kyrgyz equipment	US$000	0 0	0 0	0 0	0 0	0 0
Total annual expenditure	US$000	7 526 1	0 0	0 0	0 0	0 0
Cumulative annual expenditure	US$000	7 526 1	0 0	0 0	0 0	0 0
Interest accrued	US$000	903 1	0 0	0 0	0 0	0 0
Cumulative Capitalized Cost	US$000	8 429 2	0 0	0 0	0 0	0 0
Total Capitalized Cost = Loan Amount	US$000	8,429 2				

Capital cost real escalation rates		1995-2000	2001-2014
Western	%	0 0%	0 0%
Russian	%	0 0%	0 0%
Kyrgyz labor	%	16 9%	6 6%
Kyrgyz material	%	1 7%	0 9%
Kyrgyz equipment	%	1 5%	3 2%
Weighted Average Cost of Capital	%	12 0%	
Indirect Costs Owner s Costs and Contingency	%	12 5%	

Investment Cost Input Sheet

Loan #		3
Investment Description		1998 Underground and Aerial Pipeline Rehabilitation
In-Service Year (ISY = year 0)	January 1,	1999
Base Year for Capital Cost Estimates	January 1,	1995
Construction lead time	years	1
Useful life	years	35
Depreciation term	years	10
Loan repayment term	years	10

Overnight Capital Costs			Base Year		Installed Year
Component of Cost		Direct Costs	,O &C Costs	Total Costs	Total Costs
Western equipment	US$000	2,865 0	358 1	3,223 1	3,223 1
Russian equipment	US$000	0 0	0 0	0 0	0 0
Kyrgyz labor	US$000	445 0	55 6	500 6	934 9
Kyrgyz material	US$000	890 0	111 3	1,001 3	1,071 1
Kyrgyz equipment	US$000	0.0	0.0	0 0	0 0
Total Overnight Capital Cost	US$000	4,200 0	525 0	4,725 0	5 229 1

Calculate Interest During Construction

Year of service		-1	1	2	3	4
Calendar year		1998	1999	2000	2001	2002
Capital Expenditure Schedule, % of Overnight Capital Cost		100 0%	0 0%	0 0%	0 0%	0 0%
Western equipment	US$000	3 223 1	0 0	0 0	0 0	0 0
Russian equipment	US$000	0 0	0 0	0 0	0 0	0 0
Kyrgyz labor	US$000	799 8	0 0	0 0	0 0	0 0
Kyrgyz material	US$000	1,053 2	0 0	0 0	0 0	0 0
Kyrgyz equipment	US$000	0.0	0 0	0 0	0 0	0 0
Total annual expenditure	US$000	5,076 1	0 0	0 0	0 0	0 0
Cumulative annual expenditure	US$000	5,076 1	0 0	0 0	0 0	0 0
Interest accrued	US$000	609 1	0 0	0 0	0 0	0 0
Cumulative Capitalized Cost	US$000	5,685 2	0 0	0 0	0 0	0 0
Total Capitalized Cost = Loan Amount	US$000	5 685 2				

Capital cost real escalation rates		1995-2000	2001 2014
Western	%	0 0%	0 0%
Russian	%	0 0%	0 0%
Kyrgyz labor	%	16 9%	6 6%
Kyrgyz material	%	1 7%	0 9%
Kyrgyz equipment	%	1 5%	3 2%
Weighted Average Cost of Capital	%	12 0%	
Indirect Costs, Owner s Costs and Contingency	%	12 5%	

Investment Cost Input Sheet

Loan #		4
Investment Description		1999 Underground and Aerial Pipeline Rehabilitation
In-Service Year (ISY = year 0)	January 1,	2000
Base Year for Capital Cost Estimates	January 1,	1995
Construction lead time	years	1
Useful life	years	35
Depreciation term	years	10
Loan repayment term	years	10

Overnight Capital Costs			Base Year		Installed Year
Component of Cost		Direct Costs	,O &C Costs	Total Costs	Total Costs
Western equipment	US$000	1,335 0	166 9	1,501 9	1,501 9
Russian equipment	US$000	0 0	0 0	0 0	0 0
Kyrgyz labor	US$000	207 0	25 9	232 9	508 4
Kyrgyz material	US$000	416 0	52 0	468 0	509 2
Kyrgyz equipment	US$000	0 0	0 0	0 0	0 0
Total Overnight Capital Cost	US$000	1 958 0	244 8	2 202 8	2,519 4

Calculate Interest During Construction

Year of service		1	1	2	3	4
Calendar year		1999	2000	2001	2002	2003
Capital Expenditure Schedule % of Overnight Capital Cost		100 0%	0 0%	0 0%	0 0%	0 0%
Western equipment	US$000	1,501 9	0 0	0 0	0 0	0 0
Russian equipment	US$000	0 0	0 0	0 0	0 0	0 0
Kyrgyz labor	US$000	434 9	0 0	0 0	0 0	0 0
Kyrgyz material	US$000	500 6	0 0	0 0	0 0	0 0
Kyrgyz equipment	US$000	0 0	0 0	0 0	0 0	0 0
Total annual expenditure	US$000	2 437 4	0 0	0 0	0 0	0 0
Cumulative annual expenditure	US$000	2 437 4	0 0	0 0	0 0	0 0
Interest accrued	US$000	292 5	0 0	0 0	0 0	0 0
Cumulative Capitalized Cost	US$000	2 729 9	0 0	0 0	0 0	0 0
Total Capitalized Cost = Loan Amount	US$000	2,729 9				

Capital cost real escalation rates		1995-2000	2001-2014
Western	%	0 0%	0 0%
Russian	%	0 0%	0 0%
Kyrgyz labor	%	16 9%	6 6%
Kyrgyz material	%	1 7%	0 9%
Kyrgyz equipment	%	1 5%	3 2%
Weighted Average Cost of Capital	%	12 0%	
Indirect Costs Owner's Costs and Contingency	%	12 5%	

Investment Cost Input Sheet

Loan #		5
Investment Description		1996 Expenditure enabling Variable Flow Operation (VFO)
In Service Year (ISY = year 0)	January 1,	1997
Base Year for Capital Cost Estimates	January 1,	1995
Construction lead time	years	1
Useful life	years	35
Depreciation term	years	10
Loan repayment term	years	10

Overnight Capital Costs			Base Year		Installed Year
Component of Cost		Direct Costs	,O &C Costs	Total Costs	Total Costs
Western equipment	US$000	638 0	79 8	717 8	717 8
Russian equipment	US$000	0 0	0 0	0 0	0 0
Kyrgyz labor	US$000	7 0	0 9	7 9	10 8
Kyrgyz material	US$000	0 0	0 0	0 0	0 0
Kyrgyz equipment	US$000	0 0	0 0	0 0	0 0
Total Overnight Capital Cost	US$000	645 0	80 6	725 6	728 5

Calculate Interest During Construction

Year of service		-1	1	2	3	4
Calendar year		1996	1997	1998	1999	2000
Capital Expenditure Schedule, % of Overnight Capital Cost		100 0%	0 0%	0 0%	0 0%	0 0%
Western equipment	US$000	717 8	0 0	0 0	0 0	0 0
Russian equipment	US$000	0 0	0 0	0 0	0 0	0 0
Kyrgyz labor	US$000	9 2	0 0	0 0	0 0	0 0
Kyrgyz material	US$000	0 0	0 0	0 0	0 0	0 0
Kyrgyz equipment	US$000	0 0	0 0	0 0	0 0	0 0
Total annual expenditure	US$000	727 0	0 0	0 0	0 0	0 0
Cumulative annual expenditure	US$000	727 0	0 0	0 0	0 0	0 0
Interest accrued	US$000	87 2	0 0	0 0	0 0	0 0
Cumulative Capitalized Cost	US$000	814 2	0 0	0 0	0 0	0 0
Total Capitalized Cost = Loan Amount	US$000	814 2				

Capital cost real escalation rates		1995-2000	2001-2014
Western	%	0 0%	0 0%
Russian	%	0 0%	0 0%
Kyrgyz labor	%	16 9%	6 6%
Kyrgyz material	%	1 7%	0 9%
Kyrgyz equipment	%	1 5%	3 2%
Weighted Average Cost of Capital	%	12 0%	
Indirect Costs Owner's Costs and Contingency	%	12 5%	

53

Investment Cost Input Sheet

Loan #		6
Investment Description		1997 Expenditure enabling VFO Controls & Regulation Systems
In-Service Year (ISY = year 0)	January 1	1998
Base Year for Capital Cost Estimates	January 1	1995
Construction lead time	years	1
Useful life	years	35
Depreciation term	years	10
Loan repayment term	years	10

Overnight Capital Costs			Base Year		Installed Year
Component of Cost		Direct Costs	,O &C Costs	Total Costs	Total Costs
Western equipment	US$000	1 267 5	158 4	1,425 9	1 425 9
Russian equipment	US$000	0 0	0 0	0 0	0 0
Kyrgyz labor	US$000	37 5	4 7	42 2	67 4
Kyrgyz material	US$000	0 0	0 0	0 0	0 0
Kyrgyz equipment	US$000	0 0	0 0	0 0	0 0
Total Overnight Capital Cost	US$000	1,305 0	163 1	1 468 1	1,493 3

Calculate Interest During Construction

Year of service		-1	1	2	3	4
Calendar year		1997	1998	1999	2000	2001
Capital Expenditure Schedule, % of Overnight Capital Cost		100 0%	0 0%	0 0%	0 0%	0 0%
Western equipment	US$000	1 425 9	0 0	0 0	0 0	0 0
Russian equipment	US$000	0 0	0 0	0 0	0 0	0 0
Kyrgyz labor	US$000	57 7	0 0	0 0	0 0	0 0
Kyrgyz material	US$000	0 0	0 0	0 0	0 0	0 0
Kyrgyz equipment	US$000	0 0	0 0	0 0	0 0	0 0
Total annual expenditure	US$000	1,483 6	0 0	0 0	0 0	0 0
Cumulative annual expenditure	US$000	1 483 6	0 0	0 0	0 0	0 0
Interest accrued	US$000	178 0	0 0	0 0	0 0	0 0
Cumulative Capitalized Cost	US$000	1,661 6	0 0	0 0	0 0	0 0
Total Capitalized Cost = Loan Amount	US$000	1 661 6				

Capital cost real escalation rates		1995 2000	2001 2014
Western	%	0 0%	0 0%
Russian	%	0 0%	0 0%
Kyrgyz labor	%	16 9%	6 6%
Kyrgyz material	%	1 7%	0 9%
Kyrgyz equipment	%	1 5%	3 2%
Weighted Average Cost of Capital	%	12 0%	
Indirect Costs Owner's Costs and Contingency	%	12 5%	

Investment Cost Input Sheet

Loan #		7
Investment Description		1996 Substation Investment
In-Service Year (ISY = year 0)	January 1	1997
Base Year for Capital Cost Estimates	January 1,	1995
Construction lead time	years	1
Useful life	years	35
Depreciation term	years	10
Loan repayment term	years	10

Overnight Capital Costs			Base Year		Installed Year
Direct Capital Cost		Direct Costs	I,O &C Costs	Total Costs	Total Costs
Western equipment	US$000	865 0	108 1	973 1	973 1
Russian equipment	US$000	0 0	0 0	0 0	0 0
Kyrgyz labor	US$000	83 0	10 4	93 4	127 6
Kyrgyz material	US$000	0 0	0 0	0 0	0 0
Kyrgyz equipment	US$000	0 0	0 0	0 0	0 0
Total Overnight Capital Cost	US$000	948 0	118 5	1,066 5	1,100 7

Calculate Interest During Construction

Year of service		-1	1	2	3	4
Calendar year		1996	1997	1998	1999	2000
Capital Expenditure Schedule, % of Overnight Capital Cost		100 0%	0 0%	0 0%	0 0%	0 0%
Western equipment	US$000	973 1	0 0	0 0	0 0	0 0
Russian equipment	US$000	0 0	0 0	0 0	0 0	0 0
Kyrgyz labor	US$000	109 2	0 0	0 0	0 0	0 0
Kyrgyz material	US$000	0 0	0 0	0 0	0 0	0 0
Kyrgyz equipment	US$000	0 0	0 0	0.0	0 0	0 0
Total annual expenditure	US$000	1 082 3	0 0	0 0	0 0	0 0
Cumulative annual expenditure	US$000	1,082 3	0 0	0 0	0 0	0 0
Interest accrued	US$000	129 9	0 0	0 0	0 0	0 0
Cumulative Capitalized Cost	US$000	1,212 2	0 0	0 0	0 0	0 0
Total Capitalized Cost = Loan Amount	US$000	1,212 2				

Capital cost escalation rates		1995-2000	2001-2014
Western	%	0 0%	0 0%
Russian	%	0 0%	0 0%
Kyrgyz labor	%	16 9%	6 6%
Kyrgyz material	%	1 7%	0 9%
Kyrgyz equipment	%	1 5%	3 2%
Weighted Average Cost of Capital	%	12 0%	
Indirect Costs Owner's Costs and Contingency	%	12 5%	

Investment Cost Input Sheet

Loan #		8
Investment Description		1997 Substation Investment
In-Service Year (ISY = year 0)	January 1,	1998
Base Year for Capital Cost Estimates	January 1	1995
Construction lead time	years	1
Useful life	years	35
Depreciation term	years	10
Loan repayment term	years	10

Overnight Capital Costs			Base Year		Installed Year
Component of Cost		Direct Costs	,O &C Costs	Total Costs	Total Costs
Western equipment	US$000	4 537 0	567 1	5,104 1	5,104 1
Russian equipment	US$000	0 0	0 0	0 0	0 0
Kyrgyz labor	US$000	437 5	54 7	492 2	786 3
Kyrgyz material	US$000	0 0	0 0	0 0	0 0
Kyrgyz equipment	US$000	0 0	0 0	0 0	0 0
Total Overnight Capital Cost	US$000	4,974 5	621 8	5,596 3	5,890 4

Calculate Interest During Construction

Year of service		-1	1	2	3	4
Calendar year		1997	1998	1999	2000	2001
Capital Expenditure Schedule % of Overnight Capital Cost		100 0%	0 0%	0 0%	0 0%	0 0%
Western equipment	US$000	5 104 1	0 0	0 0	0 0	0 0
Russian equipment	US$000	0 0	0 0	0 0	0 0	0 0
Kyrgyz labor	US$000	672 6	0 0	0 0	0 0	0 0
Kyrgyz material	US$000	0 0	0 0	0 0	0 0	0 0
Kyrgyz equipment	US$000	0 0	0 0	0 0	0 0	0 0
Total annual expenditure	US$000	5,776 7	0 0	0 0	0 0	0 0
Cumulative annual expenditure	US$000	5,776 7	0 0	0 0	0 0	0 0
Interest accrued	US$000	693 2	0 0	0 0	0 0	0 0
Cumulative Capitalized Cost	US$000	6,469 9	0 0	0 0	0 0	0 0
Total Capitalized Cost = Loan Amount	US$000	6 469 9				

Capital cost real escalation rates		1995-2000	2001-2014
Western	%	0 0%	0 0%
Russian	%	0 0%	0 0%
Kyrgyz labor	%	16 9%	6 6%
Kyrgyz material	%	1 7%	0 9%
Kyrgyz equipment	%	1 5%	3 2%
Weighted Average Cost of Capital	%	12 0%	
Indirect Costs, Owner s Costs and Contingency	%	12 5%	

516

Investment Cost Input Sheet

Loan #		9
Investment Description		1998 Substation Investment
In-Service Year (ISY = year 0)	January 1,	1999
Base Year for Capital Cost Estimates	January 1,	1995
Construction lead time	years	1
Useful life	years	35
Depreciation term	years	10
Loan repayment term	years	10

Overnight Capital Costs			Base Year		Installed Year
Component of Cost		Direct Costs	,O &C Costs	Total Costs	Total Costs
Western equipment	US$000	2 955 0	369 4	3,324 4	3,324 4
Russian equipment	US$000	0 0	0 0	0 0	0 0
Kyrgyz labor	US$000	285 0	35 6	320 6	598 8
Kyrgyz material	US$000	0 0	0 0	0 0	0 0
Kyrgyz equipment	US$000	0.0	0 0	0 0	0 0
Total Overnight Capital Cost	US$000	3,240 0	405 0	3,645 0	3 923 1

Calculate Interest During Construction

Year of service		-1	1	2	3	4
Calendar year		1998	1999	2000	2001	2002
Capital Expenditure Schedule % of Overnight Capital Cost		100 0%	0 0%	0 0%	0 0%	0 0%
Western equipment	US$000	3 324 4	0 0	0 0	0 0	0 0
Russian equipment	US$000	0 0	0 0	0 0	0 0	0 0
Kyrgyz labor	US$000	512 2	0 0	0 0	0 0	0 0
Kyrgyz material	US$000	0 0	0 0	0 0	0 0	0 0
Kyrgyz equipment	US$000	0 0	0 0	0 0	0 0	0 0
Total annual expenditure	US$000	3,836 6	0 0	0 0	0 0	0 0
Cumulative annual expenditure	US$000	3,836 6	0 0	0 0	0 0	0 0
Interest accrued	US$000	460 4	0 0	0 0	0 0	0 0
Cumulative Capitalized Cost	US$000	4,297 0	0 0	0 0	0 0	0 0
Total Capitalized Cost = Loan Amount	US$000	4 297 0				

Capital cost real escalation rates		1995-2000	2001-2014
Western	%	0 0%	0 0%
Russian	%	0 0%	0 0%
Kyrgyz labor	%	16 9%	6 6%
Kyrgyz material	%	1 7%	0 9%
Kyrgyz equipment	%	1 5%	3 2%
Weighted Average Cost of Capital	%	12 0%	
Indirect Costs Owner's Costs and Contingency	%	12 5%	

Investment Cost Input Sheet

Loan #		10
Investment Description		1999 Substation Investment
In Service Year (ISY = year 0)	January 1	2000
Base Year for Capital Cost Estimates	January 1	1995
Construction lead time	years	1
Useful life	years	35
Depreciation term	years	10
Loan repayment term	years	10

Overnight Capital Costs			Base Year		Installed Year
Component of Cost		Direct Costs	O &C Costs	Total Costs	Total Costs
Western equipment	US$000	535 0	66 9	601 9	601 9
Russian equipment	US$000	0 0	0 0	0 0	0 0
Kyrgyz labor	US$000	52 5	6 6	59 1	128 9
Kyrgyz material	US$000	0 0	0 0	0 0	0 0
Kyrgyz equipment	US$000	0 0	0 0	0 0	0 0
Total Overnight Capital Cost	US$000	587 5	73 4	660 9	730 8

Calculate Interest During Construction

Year of service		-1	1	2	3	4
Calendar year		1999	2000	2001	2002	2003
Capital Expenditure Schedule % of Overnight Capital Cost		100 0%	0 0%	0 0%	0 0%	0 0%
Western equipment	US$000	601 9	0 0	0 0	0 0	0 0
Russian equipment	US$000	0 0	0 0	0 0	0 0	0 0
Kyrgyz labor	US$000	110 3	0 0	0 0	0 0	0 0
Kyrgyz material	US$000	0 0	0 0	0 0	0 0	0 0
Kyrgyz equipment	US$000	0 0	0 0	0 0	0 0	0 0
Total annual expenditure	US$000	712 2	0 0	0 0	0 0	0 0
Cumulative annual expenditure	US$000	712 2	0 0	0 0	0 0	0 0
Interest accrued	US$000	85 5	0 0	0 0	0 0	0 0
Cumulative Capitalized Cost	US$000	797 6	0 0	0 0	0 0	0 0
Total Capitalized Cost = Loan Amount	US$000	797 6				

Capital cost real escalation rates		1995 2000	2001-2014
Western	%	0 0%	0 0%
Russian	%	0 0%	0 0%
Kyrgyz labor	%	16 9%	6 6%
Kyrgyz material	%	1 7%	0 9%
Kyrgyz equipment	%	1 5%	3 2%
Weighted Average Cost of Capital	%	12 0%	
Indirect Costs Owner s Costs and Contingency	%	12 5%	

District Heating System Extension

5.6

Capital Investment Data Summary

Investment Description	District Heating System Extension

Economic and Financial Parameters

		1995-2000	2001-2014
Capital cost real escalation rates			
Western	/	0.0%	0.0%
Russian	/	0.0%	0.0%
Kyrgyz labor		16.9%	6.6%
Kyrgyz material	/	1.7%	0.9%
Kyrgyz equipment	/	1.5%	3.7%
Weighted Average Cost of Capital	/	12.0	
Physical contingencies	/	12.5%	

Investment Summary

#	Description	Direct Costs Jan95 US$000	In service Year	Loan term
1	Extension of hot water network	5,650.0	2001	10
2	n/a	0.0	1998	10
3	n/a	0.0	1998	10
4	n/a	0.0	1998	10
5	n/a	0.0	1998	10
6	n/a	0.0	1998	10
7	n/a	0.0	1998	10
8	n/a	0.0	1998	10
9	n/a	0.0	1998	10
10	n/a	0.0	1998	10
11	n/a	0.0	1998	10
	Total investment	5,650.0		

Capital Expenditure Schedule (US$000) [see Note 1]

#	Description	1995	1996	1997	1998	1999	2000	2001	2002	2003	2004	2005
1	Extension of hot water network	0.0	0.0	0.0	0.0	0.0	7,183.6	0.0	0.0	0.0	0.0	0.0
2	n/a	0.0	0.0	0.0	0.0	0.0	0.0	0.0	0.0	0.0	0.0	0.0
3	n/a	0.0	0.0	0.0	0.0	0.0	0.0	0.0	0.0	0.0	0.0	0.0
4	n/a	0.0	0.0	0.0	0.0	0.0	0.0	0.0	0.0	0.0	0.0	0.0
5	n/a	0.0	0.0	0.0	0.0	0.0	0.0	0.0	0.0	0.0	0.0	0.0
6	n/a	0.0	0.0	0.0	0.0	0.0	0.0	0.0	0.0	0.0	0.0	0.0
7	n/a	0.0	0.0	0.0	0.0	0.0	0.0	0.0	0.0	0.0	0.0	0.0
8	n/a	0.0	0.0	0.0	0.0	0.0	0.0	0.0	0.0	0.0	0.0	0.0
9	n/a	0.0	0.0	0.0	0.0	0.0	0.0	0.0	0.0	0.0	0.0	0.0
10	n/a	0.0	0.0	0.0	0.0	0.0	0.0	0.0	0.0	0.0	0.0	0.0
11	n/a	0.0	0.0	0.0	0.0	0.0	0.0	0.0	0.0	0.0	0.0	0.0
	Total annual transition	0.0	0.0	0.0	0.0	0.0	7,183.6	0.0	0.0	0.0	0.0	0.0

Investment Schedules (US$000) [see Note 2]

#	Description	1995	1996	1997	1998	1999	2000	2001	2002	2003	2004	2005
1	Extension of hot water network	0.0	0.0	0.0	0.0	0.0	0.0	8,045.6	0.0	0.0	0.0	0.0
2	n/a	0.0	0.0	0.0	0.0	0.0	0.0	0.0	0.0	0.0	0.0	0.0
3	n/a	0.0	0.0	0.0	0.0	0.0	0.0	0.0	0.0	0.0	0.0	0.0
4	n/a	0.0	0.0	0.0	0.0	0.0	0.0	0.0	0.0	0.0	0.0	0.0
5	n/a	0.0	0.0	0.0	0.0	0.0	0.0	0.0	0.0	0.0	0.0	0.0
6	n/a	0.0	0.0	0.0	0.0	0.0	0.0	0.0	0.0	0.0	0.0	0.0
7	n/a	0.0	0.0	0.0	0.0	0.0	0.0	0.0	0.0	0.0	0.0	0.0
8	n/a	0.0	0.0	0.0	0.0	0.0	0.0	0.0	0.0	0.0	0.0	0.0
9	n/a	0.0	0.0	0.0	0.0	0.0	0.0	0.0	0.0	0.0	0.0	0.0
10	n/a	0.0	0.0	0.0	0.0	0.0	0.0	0.0	0.0	0.0	0.0	0.0
11	n/a	0.0	0.0	0.0	0.0	0.0	0.0	0.0	0.0	0.0	0.0	0.0
	Total loan amounts	0.0	0.0	0.0	0.0	0.0	0.0	8,045.6	0.0	0.0	0.0	0.0

Debt Service (US$000)

#	Description	1995	1996	1997	1998	1999	2000	2001	2002	2003	2004	2005	2006	2007	2008	2009	2010
1	Extension of hot water network	0.0	0.0	0.0	0.0	0.0	0.0	1,423.9	1,423.9	1,423.9	1,423.9	1,423.9	1,423.9	1,423.9	1,423.9	1,423.9	1,423.9
2	n/a	0.0	0.0	0.0	0.0	0.0	0.0	0.0	0.0	0.0	0.0	0.0	0.0	0.0	0.0	0.0	0.0
3	n/a	0.0	0.0	0.0	0.0	0.0	0.0	0.0	0.0	0.0	0.0	0.0	0.0	0.0	0.0	0.0	0.0
4	n/a	0.0	0.0	0.0	0.0	0.0	0.0	0.0	0.0	0.0	0.0	0.0	0.0	0.0	0.0	0.0	0.0
5	n/a	0.0	0.0	0.0	0.0	0.0	0.0	0.0	0.0	0.0	0.0	0.0	0.0	0.0	0.0	0.0	0.0
6	n/a	0.0	0.0	0.0	0.0	0.0	0.0	0.0	0.0	0.0	0.0	0.0	0.0	0.0	0.0	0.0	0.0
7	n/a	0.0	0.0	0.0	0.0	0.0	0.0	0.0	0.0	0.0	0.0	0.0	0.0	0.0	0.0	0.0	0.0
8	n/a	0.0	0.0	0.0	0.0	0.0	0.0	0.0	0.0	0.0	0.0	0.0	0.0	0.0	0.0	0.0	0.0
9	n/a	0.0	0.0	0.0	0.0	0.0	0.0	0.0	0.0	0.0	0.0	0.0	0.0	0.0	0.0	0.0	0.0
10	n/a	0.0	0.0	0.0	0.0	0.0	0.0	0.0	0.0	0.0	0.0	0.0	0.0	0.0	0.0	0.0	0.0
11	n/a	0.0	0.0	0.0	0.0	0.0	0.0	0.0	0.0	0.0	0.0	0.0	0.0	0.0	0.0	0.0	0.0
	Total Repayment amount	0.0	0.0	0.0	0.0	0.0	0.0	1,423.9	1,423.9	1,423.9	1,423.9	1,423.9	1,423.9	1,423.9	1,423.9	1,423.9	1,423.9

Notes

1. includes direct costs, indirect costs, Owner's costs, contingency and real escalation
2. includes capital expenditure and interest during construction

2011	2012	2013	2014	2015	2016	2017	2018	2019
0 0	0 0	0 0	0 0	0 0	0 0	0 0	0 0	0 0
0 0	0 0	0 0	0 0	0 0	0 0	0 0	0 0	0 0
0 0	0 0	0 0	0 0	0 0	0 0	0 0	0 0	0 0
0 0	0 0	0 0	0 0	0 0	0 0	0 0	0 0	0 0
0 0	0 0	0 0	0 0	0 0	0 0	0 0	0 0	0 0
0 0	0 0	0 0	0 0	0 0	0 0	0 0	0 0	0 0
0 0	0 0	0 0	0 0	0 0	0 0	0 0	0 0	0 0
0 0	0 0	0 0	0 0	0 0	0 0	0 0	0 0	0 0
0 0	0 0	0 0	0 0	0 0	0 0	0 0	0 0	0 0
0 0	0 0	0 0	0 0	0 0	0 0	0 0	0 0	0 0
0 0	0 0	0 0	0.0	0 0	0.0	0 0	0 0	0 0
0 0	0 0	0 0	0 0	0 0	0 0	0 0	0 0	0 0

Investment Cost Input Sheet

Loan #		1
Investment Description		Extension of hot water network
In-Service Year (ISY = year 0)	January 1	2001
Base Year for Capital Cost Estimates	January 1	1995
Construction lead time	years	1
Useful life	years	35
Depreciation term	years	10
Loan repayment term	years	10

Overnight Capital Costs Component of Cost		Direct Costs	Base Year I,O &C Costs	Total Costs	Installed Year Total Costs
Western equipment	US$000	4,025 0	503 1	4,528 1	4 528 1
Russian equipment	US$000	0 0	0 0	0 0	0 0
Kyrgyz labor	US$000	541 0	67 6	608 6	1,416 4
Kyrgyz material	US$000	1,084 0	135 5	1,219 5	1 338 7
Kyrgyz equipment	US$000	0 0	0 0	0 0	0 0
Total Overnight Capital Cost	US$000	5,650 0	706 3	6,356 3	7,283 2

Calculate Interest During Construction

Year of service		-1	1	2	3	4
Calendar year		2000	2001	2002	2003	2004
Capital Expenditure Schedule, % of Overnight Capital Cost		100 0%	0 0%	0 0%	0 0%	0 0%
Western equipment	US$000	4,528 1	0 0	0 0	0 0	0 0
Russian equipment	US$000	0 0	0 0	0 0	0 0	0 0
Kyrgyz labor	US$000	1 328 7	0 0	0 0	0 0	0 0
Kyrgyz material	US$000	1,326 7	0 0	0 0	0 0	0 0
Kyrgyz equipment	US$000	0 0	0 0	0 0	0 0	0 0
Total annual expenditure	US$000	7 183 6	0 0	0 0	0 0	0 0
Cumulative annual expenditure	US$000	7 183 6	0 0	0 0	0 0	0 0
Interest accrued	US$000	862 0	0 0	0 0	0 0	0 0
Cumulative Capitalized Cost	US$000	8 045 6	0 0	0 0	0 0	0 0
Total Capitalized Cost = Loan Amount	US$000	8 045 6				

Capital cost real escalation rates		1995 2000	2001-2014
Western	%	0 0%	0 0%
Russian	%	0 0%	0 0%
Kyrgyz labor	%	16 9%	6 6%
Kyrgyz material	%	1 7%	0 9%
Kyrgyz equipment	%	1 5%	3 2%
Weighted Average Cost of Capital	%	12 0%	
Indirect Costs Owner's Costs and Contingency	%	12 5%	

522

New TG for TES-1 - 83.7 MWe (net)

Capital Investment Data Summary

Investment Description: Capacity additions for electric power generation

Economic and Financial Parameters

		1995 2000	2001 2014
Capital cost real escalation rates			
Western	/	0 0 /	0 0%
Russian	/	0 0 /	0 0 /
Kyrgyz labor	/	16 9 /	6 6 /
Kyrgyz material	/	1 7%	0 9 /
Kyrgyz equipment	/	1 5 /	3 2 /
Weighted Average Cost of Capital	/	12 0 /	
Physical contingencies	/	12 5 /	

Investment Summary

#	Description	Direct Costs Jan95 US$000	In service Year	Loan term
1	New TG for TES 1 83 7 MWe (net)	21 060 0	2002	10
2	n/a	0 0	1997	10
3	n/a	0 0	1997	10
4	n/a	0 0	1997	10
5	n/a	0 0	1997	10
6	n/a	0 0	1997	10
7	n/a	0 0	1997	10
8	n/a	0 0	1997	10
9	n/a	0 0	1997	10
10	n/a	0 0	1997	10
11	n/a	0 0	1997	10
	Total in estment	21 060 0		

Capital Expenditure Schedule (US$000) [see Note 1]

#	Description	1995	1996	1997	1998	1999	2000	2001	2002	2003	2004	2005
1	New TG for TES 1 83 7 MWe (net)	0 0	0 0	0 0	0 0	0 0	12 618 8	12 712 7	0 0	0 0	0 0	0 0
2	n/a	0 0	0 0	0 0	0 0	0 0	0 0	0 0	0 0	0 0	0 0	0 0
3	n/a	0 0	0 0	0 0	0 0	0 0	0 0	0 0	0 0	0 0	0 0	0 0
4	n/a	0 0	0 0	0 0	0 0	0 0	0 0	0 0	0 0	0 0	0 0	0 0
5	n/a	0 0	0 0	0 0	0 0	0 0	0 0	0 0	0 0	0 0	0 0	0 0
6	n/a	0 0	0 0	0 0	0 0	0 0	0 0	0 0	0 0	0 0	0 0	0 0
7	n/a	0 0	0 0	0 0	0 0	0 0	0 0	0 0	0 0	0 0	0 0	0 0
8	n/a	0 0	0 0	0 0	0 0	0 0	0 0	0 0	0 0	0 0	0 0	0 0
9	n/a	0 0	0 0	0 0	0 0	0 0	0 0	0 0	0 0	0 0	0 0	0 0
10	n/a	0 0	0 0	0 0	0 0	0 0	0 0	0 0	0 0	0 0	0 0	0 0
11	n/a	0 0	0.0	0.0	0 0	0.0	0 0	0.0	0.0	0.0	0.0	0.0
	Total annual draw-down	0 0	0 0	0 0	0 0	0 0	12 618 8	12 712 7	0 0	0 0	0 0	0 0

Investment Schedules (US$000) [see Note 2]

#	Description	1995	1996	1997	1998	1999	2000	2001	2002	2003	2004	2005
1	New TG for TES 1 83 7 MWe (net)	0 0	0 0	0 0	0 0	0 0	0 0	0 0	30 067 2	0 0	0 0	0 0
2	n/a	0 0	0 0	0 0	0 0	0 0	0 0	0 0	0 0	0 0	0 0	0 0
3	n/a	0 0	0 0	0 0	0 0	0 0	0 0	0 0	0 0	0 0	0 0	0 0
4	n/a	0 0	0 0	0 0	0 0	0 0	0 0	0 0	0 0	0 0	0 0	0 0
5	n/a	0 0	0 0	0 0	0 0	0 0	0 0	0 0	0 0	0 0	0 0	0 0
6	n/a	0 0	0 0	0 0	0 0	0 0	0 0	0 0	0 0	0 0	0 0	0 0
7	n/a	0 0	0 0	0 0	0 0	0 0	0 0	0 0	0 0	0 0	0 0	0 0
8	n/a	0 0	0 0	0 0	0 0	0 0	0 0	0 0	0 0	0 0	0 0	0 0
9	n/a	0 0	0 0	0 0	0 0	0 0	0 0	0 0	0 0	0 0	0 0	0 0
10	n/a	0 0	0 0	0 0	0 0	0 0	0 0	0 0	0 0	0 0	0 0	0 0
11	n/a	0 0	0 0	0.0	0 0	0 0	0 0	0.0	0 0	0 0	0 0	0 0
	Total loan amounts	0 0	0 0	0 0	0 0	0 0	0 0	0 0	30 067 2	0 0	0 0	0 0

Debt Service (US$000)

#	Description	1995	1996	1997	1998	1999	2000	2001	2002	2003	2004	2005	2006	2007	2008	2009	2010
1	New TG for TES 1 83 7 MWe (net)	0 0	0 0	0 0	0 0	0 0	0 0	0 0	5 321 4	5 321 4	5 321 4	5 321 4	5 321 4	5 321 4	5 321 4	5 321 4	5 321 4
2	n/a	0 0	0 0	0 0	0 0	0 0	0 0	0 0	0 0	0 0	0 0	0 0	0 0	0 0	0 0	0 0	0 0
3	n/a	0 0	0 0	0 0	0 0	0 0	0 0	0 0	0 0	0 0	0 0	0 0	0 0	0 0	0 0	0 0	0 0
4	n/a	0 0	0 0	0 0	0 0	0 0	0 0	0 0	0 0	0 0	0 0	0 0	0 0	0 0	0 0	0 0	0 0
5	n/a	0 0	0 0	0 0	0 0	0 0	0 0	0 0	0 0	0 0	0 0	0 0	0 0	0 0	0 0	0 0	0 0
6	n/a	0 0	0 0	0 0	0 0	0 0	0 0	0 0	0 0	0 0	0 0	0 0	0 0	0 0	0 0	0 0	0 0
7	n/a	0 0	0 0	0 0	0 0	0 0	0 0	0 0	0 0	0 0	0 0	0 0	0 0	0 0	0 0	0 0	0 0
8	n/a	0 0	0 0	0 0	0 0	0 0	0 0	0 0	0 0	0 0	0 0	0 0	0 0	0 0	0 0	0 0	0 0
9	n/a	0 0	0 0	0 0	0 0	0 0	0 0	0 0	0 0	0 0	0 0	0 0	0 0	0 0	0 0	0 0	0 0
10	n/a	0 0	0 0	0 0	0 0	0 0	0 0	0 0	0 0	0 0	0 0	0 0	0 0	0 0	0 0	0 0	0 0
11	n/a	0 0	0 0	0 0	0 0	0 0	0 0	0 0	0 0	0 0	0 0	0 0	0 0	0 0	0 0	0 0	0 0
	Total Repayment amounts	0 0	0 0	0 0	0 0	0 0	0 0	0 0	5 321 4	5 321 4	5 321 4	5 371 4	5 321 4	5 321 4	5 321 4	5 321 4	5 321 4

Notes

1 includes direct costs indirect costs Owner s costs contingency and real escalation
2 includes capital expenditure and interest during construction

524

2011	2012	2013	2014	2015	2016	2017	2018	2019
5 321 4	0 0	0 0	0 0	0 0	0 0	0 0	0 0	0 0
0 0	0 0	0 0	0 0	0 0	0 0	0 0	0 0	0 0
0 0	0 0	0 0	0 0	0 0	0 0	0 0	0 0	0 0
0 0	0 0	0 0	0 0	0 0	0 0	0 0	0 0	0 0
0 0	0 0	0 0	0 0	0 0	0 0	0 0	0 0	0 0
0 0	0 0	0 0	0 0	0 0	0 0	0 0	0 0	0 0
0 0	0 0	0 0	0 0	0 0	0 0	0 0	0 0	0 0
0 0	0 0	0 0	0 0	0 0	0 0	0 0	0 0	0 0
0 0	0 0	0 0	0 0	0 0	0 0	0 0	0 0	0 0
0 0	0 0	0 0	0 0	0 0	0 0	0 0	0 0	0 0
0 0	0 0	0 0	0 0	0 0	0 0	0 0	0 0	0 0
5 321 4	0 0	0 0	0 0	0 0	0 0	0 0	0 0	0 0

525

Investment Cost Input Sheet

Loan #		1
Investment Description		New TG for TES-1 - 83 7 MWe (net)
In-Service Year (ISY = year 0)	January 1	2002
Base Year for Capital Cost Estimates	January 1,	1995
Construction lead time	years	2
Useful life	years	35
Depreciation term	years	10
Loan repayment term	years	10

Overnight Capital Costs Component of Cost		Direct Costs	Base Year I O &C Costs	Total Costs	Installed Year Total Costs
Western equipment	US$000	0 0	0 0	0 0	0 0
Russian equipment	US$000	19 640 0	2 455 0	22 095 0	22,095 0
Kyrgyz labor	US$000	1 140 0	142 5	1,282 5	3 181 6
Kyrgyz material	US$000	280 0	35 0	315 0	348 9
Kyrgyz equipment	US$000	0 0	0 0	0 0	0 0
Total Overnight Capital Cost	US$000	21 060 0	2 632 5	23,692 5	25 625 5

Calculate Interest During Construction

Year of service		-2	-1	1	2	3
Calendar year		2000	2001	2002	2003	2004
Capital Expenditure Schedule % of Overnight Capital Cost		50 0%	50 0%	0 0%	0 0%	0 0%
Western equipment	US$000	0 0	0 0	0 0	0 0	0 0
Russian equipment	US$000	11 047 5	11 047 5	0 0	0 0	0 0
Kyrgyz labor	US$000	1 399 9	1 492 3	0 0	0 0	0 0
Kyrgyz material	US$000	171 4	172 9	0 0	0 0	0 0
Kyrgyz equipment	US$000	0 0	0 0	0 0	0 0	0 0
Total annual expenditure	US$000	12,618 8	12 712 7	0 0	0 0	0 0
Cumulative annual expenditure	US$000	12,618 8	26 845 7	0 0	0 0	0 0
Interest accrued	US$000	1 514 3	3,221 5	0 0	0 0	0 0
Cumulative Capitalized Cost	US$000	14 133 0	30 067 2	0 0	0 0	0 0
Total Capitalized Cost = Loan Amount	US$000		30 067 2			

Capital cost real escalation rates		1995-2000	2001 2014
Western	%	0 0%	0 0%
Russian	%	0 0%	0 0%
Kyrgyz labor	%	16 9%	6 6%
Kyrgyz material	%	1 7%	0 9%
Kyrgyz equipment	%	1 5%	3 2%
Weighted Average Cost of Capital	%	12 0%	
Indirect Costs Owner s Costs and Contingency	%	12 5%	

New Heat Only Boilers for Local System - Without Extension

Capital Investment Data Summary

In estment Description: New HOBs for Local DH System

Economic and Financial Parameters

		1995 2000	2001 2014
Capital cost real escalation rates			
Western	/	0 0 /	0 0 /
Russian	/	0 0 /	0 0 /
Kyrgyz labor	/	16 9%	6 6 /
Kyrgyz material	/	1 7%	0 9 /
Kyrgyz equipment	/	1 5 /	3 2 /
Weighted Average Cost of Capital	/	12 0 /	
Physical contingencies	/	12 5 /	

Investment Summary

#	Description	Direct Cost Jan95 US$000	In service Year	Loan term
1	New HOBs #1 50 Gcal/hr	1 200 0	2005	20
2	n/a	0 0	1997	10
3	n/a	0 0	1997	10
4	n/a	0 0	1997	10
5	n/a	0 0	1997	10
6	n/a	0 0	1997	10
7	n/a	0 0	1997	10
8	n/a	0 0	1997	10
9	n/a	0 0	1997	10
10	n/a	0 0	1997	10
11	n/a	0 0	1997	10
	Total investment	1 200 0		

Capital Expenditure Schedule (US$000) [see Note 1]

#	Description	1995	1996	1997	1998	1999	2000	2001	2002	2003	2004	2005
1	New HOBs #1 50 Gcal/hr	0 0	0 0	0 0	0 0	0 0	0 0	0 0	0 0	866 6	886 8	0 0
2	n/a	0 0	0 0	0 0	0 0	0 0	0 0	0 0	0 0	0 0	0 0	0 0
3	n/a	0 0	0 0	0 0	0 0	0 0	0 0	0 0	0 0	0 0	0 0	0 0
4	n/a	0 0	0 0	0 0	0 0	0 0	0 0	0 0	0 0	0 0	0 0	0 0
5	n/a	0 0	0 0	0 0	0 0	0 0	0 0	0 0	0 0	0 0	0 0	0 0
6	n/a	0 0	0 0	0 0	0 0	0 0	0 0	0 0	0 0	0 0	0 0	0 0
7	n/a	0 0	0 0	0 0	0 0	0 0	0 0	0 0	0 0	0 0	0 0	0 0
8	n/a	0 0	0 0	0 0	0 0	0 0	0 0	0 0	0 0	0 0	0 0	0 0
9	n/a	0 0	0 0	0 0	0 0	0 0	0 0	0 0	0 0	0 0	0 0	0 0
10	n/a	0 0	0 0	0 0	0 0	0 0	0 0	0 0	0 0	0 0	0 0	0 0
11	n/a	0 0	0 0	0 0	0 0	0 0	0 0	0 0	0 0	0 0	0 0	0 0
	Total annual drawdown	0 0	0 0	0 0	0 0	0 0	0 0	0 0	0 0	866 6	886 8	0 0

Investment Schedules (US$000) [see Note 2]

#	Description	1995	1996	1997	1998	1999	2000	2001	2002	2003	2004	2005
1	New HOBs #1 50 Gcal/hr	0 0	0 0	0 0	0 0	0 0	0 0	0 0	0 0	0 0	0 0	2 080 3
2	n/a	0 0	0 0	0 0	0 0	0 0	0 0	0 0	0 0	0 0	0 0	0 0
3	n/a	0 0	0 0	0 0	0 0	0 0	0 0	0 0	0 0	0 0	0 0	0 0
4	n/a	0 0	0 0	0 0	0 0	0 0	0 0	0 0	0 0	0 0	0 0	0 0
5	n/a	0 0	0 0	0 0	0 0	0 0	0 0	0 0	0 0	0 0	0 0	0 0
6	n/a	0 0	0 0	0 0	0 0	0 0	0 0	0 0	0 0	0 0	0 0	0 0
7	n/a	0 0	0 0	0 0	0 0	0 0	0 0	0 0	0 0	0 0	0 0	0 0
8	n/a	0 0	0 0	0 0	0 0	0 0	0 0	0 0	0 0	0 0	0 0	0 0
9	n/a	0 0	0 0	0 0	0 0	0 0	0 0	0 0	0 0	0 0	0 0	0 0
10	n/a	0 0	0 0	0 0	0 0	0 0	0 0	0 0	0 0	0 0	0 0	0 0
11	n/a	0 0	0 0	0 0	0 0	0 0	0 0	0 0	0 0	0 0	0 0	0 0
	Total loan amounts	0 0	0 0	0 0	0 0	0 0	0 0	0 0	0 0	0 0	0 0	2 080 3

Debt Service (US$000)

#	Description	1995	1996	1997	1998	1999	2000	2001	2002	2003	2004	2005	2006	2007	2008	2009	2010
1	New HOBs #1 50 Gcal/hr	0 0	0 0	0 0	0 0	0 0	0 0	0 0	0 0	0 0	0 0	278 5	278 5	278 5	278 5	278 5	278 5
2	n/a	0 0	0 0	0 0	0 0	0 0	0 0	0 0	0 0	0 0	0 0	0 0	0 0	0 0	0 0	0 0	0 0
3	n/a	0 0	0 0	0 0	0 0	0 0	0 0	0 0	0 0	0 0	0 0	0 0	0 0	0 0	0 0	0 0	0 0
4	n/a	0 0	0 0	0 0	0 0	0 0	0 0	0 0	0 0	0 0	0 0	0 0	0 0	0 0	0 0	0 0	0 0
5	n/a	0 0	0 0	0 0	0 0	0 0	0 0	0 0	0 0	0 0	0 0	0 0	0 0	0 0	0 0	0 0	0 0
6	n/a	0 0	0 0	0 0	0 0	0 0	0 0	0 0	0 0	0 0	0 0	0 0	0 0	0 0	0 0	0 0	0 0
7	n/a	0 0	0 0	0 0	0 0	0 0	0 0	0 0	0 0	0 0	0 0	0 0	0 0	0 0	0 0	0 0	0 0
8	n/a	0 0	0 0	0 0	0 0	0 0	0 0	0 0	0 0	0 0	0 0	0 0	0 0	0 0	0 0	0 0	0 0
9	n/a	0 0	0 0	0 0	0 0	0 0	0 0	0 0	0 0	0 0	0 0	0 0	0 0	0 0	0 0	0 0	0 0
10	n/a	0 0	0 0	0 0	0 0	0 0	0 0	0 0	0 0	0 0	0 0	0 0	0 0	0 0	0 0	0 0	0 0
11	n/a	0 0	0 0	0 0	0 0	0 0	0 0	0 0	0 0	0 0	0 0	0 0	0 0	0 0	0 0	0 0	0 0
	Total Repayment amounts	0 0	0 0	0 0	0 0	0 0	0 0	0 0	0 0	0 0	0 0	278 5	278 5	278 5	278 5	278 5	278 5

Notes

1 includes direct costs indirect costs Owner s costs contingency and real escalation
2 includes capital expenditure and interest during construction

538

2011	2012	2013	2014	2015	2016	2017	2018	2019
278 5	278 5	278 5	278 5	278 5	278 5	278 5	278 5	278 5
0 0	0 0	0 0	0 0	0 0	0 0	0 0	0 0	0 0
0 0	0 0	0 0	0 0	0 0	0 0	0 0	0 0	0 0
0 0	0 0	0 0	0 0	0 0	0 0	0 0	0 0	0 0
0 0	0 0	0 0	0 0	0 0	0 0	0 0	0 0	0 0
0 0	0 0	0 0	0 0	0 0	0 0	0 0	0 0	0 0
0 0	0 0	0 0	0 0	0 0	0 0	0 0	0 0	0 0
0 0	0 0	0 0	0 0	0 0	0 0	0 0	0 0	0 0
0 0	0 0	0 0	0 0	0 0	0 0	0 0	0 0	0 0
0 0	0 0	0 0	0 0	0 0	0 0	0 0	0 0	0 0
0 0	0 0	0 0	0 0	0 0	0 0	0 0	0 0	0 0
278 5	278 5	278 5	278 5	278 5	278 5	278 5	278 5	278 5

326

Investment Cost Input Sheet

Loan #		1	
Investment Description		New HOBs #1	50 Gcal/hr
In-Service Year (ISY = year 0)	January 1,	2005	
Base Year for Capital Cost Estimates	January 1	1995	
Construction lead time	years	2	
Useful life	years	35	
Depreciation term	years	20	
Loan repayment term	years	20	

Overnight Capital Costs Component of Cost		Direct Costs	Base Year I O &C Costs	Total Costs	Installed Year Total Costs
Western equipment	US$000	0 0	0 0	0 0	0 0
Russian equipment	US$000	900 0	112 5	1 012 5	1 012 5
Kyrgyz labor	US$000	200 0	25 0	225 0	676 1
Kyrgyz material	US$000	100 0	12 5	112 5	128 0
Kyrgyz equipment	US$000	0 0	0 0	0 0	0 0
Total Overnight Capital Cost	US$000	1,200 0	150 0	1 350 0	1,816 6

Calculate Interest During Construction

Year of service		-2	-1	1	2	3
Calendar year		2003	2004	2005	2006	2007
Capital Expenditure Schedule % of Overnight Capital Cost		50 0%	50 0%	0 0%	0 0%	0 0%
Western equipment	US$000	0 0	0 0	0 0	0 0	0 0
Russian equipment	US$000	506 3	506 3	0 0	0 0	0 0
Kyrgyz labor	US$000	297 5	317 1	0 0	0 0	0 0
Kyrgyz material	US$000	62 9	63 4	0 0	0 0	0 0
Kyrgyz equipment	US$000	0 0	0 0	0 0	0 0	0 0
Total annual expenditure	US$000	866 6	886 8	0 0	0 0	0 0
Cumulative annual expenditure	US$000	866 6	1 857 4	0 0	0 0	0 0
Interest accrued	US$000	104 0	222 9	0 0	0 0	0 0
Cumulative Capitalized Cost	US$000	970 6	2 080 3	0 0	0 0	0 0
Total Capitalized Cost = Loan Amount	US$000		2,080 3			

Capital cost real escalation rates		1995-2000	2001-2014
Western	%	0 0%	0 0%
Russian	%	0 0%	0 0%
Kyrgyz labor	%	16 9%	6 6%
Kyrgyz material	%	1 7%	0 9%
Kyrgyz equipment	%	1 5%	3 2%
Weighted Average Cost of Capital	%	12 0%	
Indirect Costs Owner s Costs and Contingency	%	12 5%	

539

New Heat Only Boilers for Local System - With Extension

Capital Investment Data Summary

In estment Description: New HOBs for Local DH System

Economic and Financial Parameters

		1995 2000	2001 2014
Capital cost real escalation rates			
Western	/	0 0 /	0 0 /
Russian	/	0 0 /	0 0 /
Kyrgyz labor	/	16 9 /	6 6 /
Kyrgyz material	/	1 7%	0 9 /
Kyrgyz equipment	/	1 5 /	3 2 /
Weighted Average Cost of Capital	/	12 0 /	
Physical contingencies	/	12 5 /	

Investment Summary

#	Description	Direct Cost Jan95 US$000	In service Year	Loan term
1	New HOBs #1 50 Gcal/hr	1 200 0	2003	20
2	New HOBs #2 3x50 Gcal/hr	3 600 0	2005	20
3	n/a	0 0	1997	10
4	n/a	0 0	1997	10
5	n/a	0 0	1997	10
6	n/a	0 0	1997	10
7	n/a	0 0	1997	10
8	n/a	0 0	1997	10
9	n/a	0 0	1997	10
10	n/a	0 0	1997	10
11	n/a	0 0	1997	10
	Total investment	4 800 0		

Capital Expenditure Schedule (US$000) [see Note 1]

#	Description	1995	1996	1997	1998	1999	2000	2001	2002	2003	2004	2005
1	New HOBs #1 50 Gcal/hr	0 0	0 0	0 0	0 0	0 0	0 0	829 8	847 6	0 0	0 0	0 0
2	New HOBs #2 3x50 Gcal/hr	0 0	0 0	0 0	0 0	0 0	0 0	0 0	0 0	2 599 9	2 660 5	0 0
3	n/a	0 0	0 0	0 0	0 0	0 0	0 0	0 0	0 0	0 0	0 0	0 0
4	n/a	0 0	0 0	0 0	0 0	0 0	0 0	0 0	0 0	0 0	0 0	0 0
5	n/a	0 0	0 0	0 0	0 0	0 0	0 0	0 0	0 0	0 0	0 0	0 0
6	n/a	0 0	0 0	0 0	0 0	0 0	0 0	0 0	0 0	0 0	0 0	0 0
7	n/a	0 0	0 0	0 0	0 0	0 0	0 0	0 0	0 0	0 0	0 0	0 0
8	n/a	0 0	0 0	0 0	0 0	0 0	0 0	0 0	0 0	0 0	0 0	0 0
9	n/a	0 0	0 0	0 0	0 0	0 0	0 0	0 0	0 0	0 0	0 0	0 0
10	n/a	0 0	0 0	0 0	0 0	0 0	0 0	0 0	0 0	0 0	0 0	0 0
11	n/a	0.0	0.0	0 0	0 0	0.0	0.0	0.0	0.0	0 0	0 0	0 0
	Total ann al d a -do n	0 0	0 0	0 0	0 0	0 0	0 0	829 8	847 6	2 599 9	2 660 5	0 0

Investment Schedules (US$000) [see Note 2]

#	Description	1995	1996	1997	1998	1999	2000	2001	2002	2003	2004	2005
1	New HOBs #1 50 Gcal/hr	0 0	0 0	0 0	0 0	0 0	0 0	0 0	0 0	1 990 3	0 0	0 0
2	New HOBs #2 3x50 Gcal/hr	0 0	0 0	0 0	0 0	0 0	0 0	0 0	0 0	0 0	0 0	6 241 0
3	n/a	0 0	0 0	0 0	0 0	0 0	0 0	0 0	0 0	0 0	0 0	0 0
4	n/a	0 0	0 0	0 0	0 0	0 0	0 0	0 0	0 0	0 0	0 0	0 0
5	n/a	0 0	0 0	0 0	0 0	0 0	0 0	0 0	0 0	0 0	0 0	0 0
6	n/a	0 0	0 0	0 0	0 0	0 0	0 0	0 0	0 0	0 0	0 0	0 0
7	n/a	0 0	0 0	0 0	0 0	0 0	0 0	0 0	0 0	0 0	0 0	0 0
8	n/a	0 0	0 0	0 0	0 0	0 0	0 0	0 0	0 0	0 0	0 0	0 0
9	n/a	0 0	0 0	0 0	0 0	0 0	0 0	0 0	0 0	0 0	0 0	0 0
10	n a	0 0	0 0	0 0	0 0	0 0	0 0	0 0	0 0	0 0	0 0	0 0
11	n/a	0 0	0 0	0 0	0 0	0.0	0 0	0 0	0 0	0 0	0 0	0 0
	Total loan amounts	0 0	0 0	0 0	0 0	0 0	0 0	0 0	0 0	1 990 3	0 0	6 241 0

Debt Service (US$000)

#	Description	1995	1996	1997	1998	1999	2000	2001	2002	2003	2004	2005	2006	2007	2008	2009	2010
1	New HOBs #1 50 Gcal/hr	0 0	0 0	0 0	0 0	0 0	0 0	0 0	0 0	266 5	266 5	266 5	266 5	266 5	266 5	266 5	266 5
2	New HOBs #2 3x50 Gcal/hr	0 0	0 0	0 0	0 0	0 0	0 0	0 0	0 0	0 0	0 0	835 5	835 5	835 5	835 5	835 5	835 5
3	n/a	0 0	0 0	0 0	0 0	0 0	0 0	0 0	0 0	0 0	0 0	0 0	0 0	0 0	0 0	0 0	0 0
4	n/a	0 0	0 0	0 0	0 0	0 0	0 0	0 0	0 0	0 0	0 0	0 0	0 0	0 0	0 0	0 0	0 0
5	n/a	0 0	0 0	0 0	0 0	0 0	0 0	0 0	0 0	0 0	0 0	0 0	0 0	0 0	0 0	0 0	0 0
6	n/a	0 0	0 0	0 0	0 0	0 0	0 0	0 0	0 0	0 0	0 0	0 0	0 0	0 0	0 0	0 0	0 0
7	n/a	0 0	0 0	0 0	0 0	0 0	0 0	0 0	0 0	0 0	0 0	0 0	0 0	0 0	0 0	0 0	0 0
8	n a	0 0	0 0	0 0	0 0	0 0	0 0	0 0	0 0	0 0	0 0	0 0	0 0	0 0	0 0	0 0	0 0
9	n/a	0 0	0 0	0 0	0 0	0 0	0 0	0 0	0 0	0 0	0 0	0 0	0 0	0 0	0 0	0 0	0 0
10	n/a	0 0	0 0	0 0	0 0	0 0	0 0	0 0	0 0	0 0	0 0	0 0	0 0	0 0	0 0	0 0	0 0
11	n/a	0 0	0 0	0 0	0 0	0 0	0 0	0 0	0.0	0 0	0 0	0 0	0 0	0 0	0 0	0 0	0 0
	Total R payment amounts	0 0	0 0	0 0	0 0	0 0	0 0	0 0	0 0	266 5	266 5	1 102 0	1 102 0	1 102 0	1 102 0	1 102 0	1 102 0

Notes

1 incl des direct costs indirect costs Owner s costs contingency and real escalation
2 ncludes capital expenditure and interest during construction

BEST AVAILABLE COPY

532

2011	2012	2013	2014	2015	2016	2017	2018	2019
266 5	266 5	266 5	266 5	266 5	266 5	266 5	266 5	266 5
835 5	835 5	835 5	835 5	835 5	835 5	835 5	835 5	835 5
0 0	0 0	0 0	0 0	0 0	0 0	0 0	0 0	0 0
0 0	0 0	0 0	0 0	0 0	0 0	0 0	0 0	0 0
0 0	0 0	0 0	0 0	0 0	0 0	0 0	0 0	0 0
0 0	0 0	0 0	0 0	0 0	0 0	0 0	0 0	0 0
0 0	0 0	0 0	0 0	0 0	0 0	0 0	0 0	0 0
0 0	0 0	0 0	0 0	0 0	0 0	0 0	0 0	0 0
0 0	0 0	0 0	0 0	0 0	0 0	0 0	0 0	0 0
0 0	0 0	0 0	0 0	0 0	0 0	0 0	0 0	0 0
0 0	0 0	0 0	0 0	0 0	0 0	0 0	0 0	0 0
1 102 0	1 102 0	1 102 0	1 102 0	1 102 0	1 102 0	1 102 0	1 102 0	1 102 0

BEST AVAILABLE COPY

533

Investment Cost Input Sheet

Loan #		1
Investment Description		New HOBs #1 - 50 Gcal/hr
In-Service Year (ISY = year 0)	January 1	2003
Base Year for Capital Cost Estimates	January 1,	1995
Construction lead time	years	2
Useful life	years	35
Depreciation term	years	20
Loan repayment term	years	20

Overnight Capital Costs Component of Cost		Direct Costs	Base Year I O &C Costs	Total Costs	Installed Year Total Costs
Western equipment	US$000	0 0	0 0	0 0	0 0
Russian equipment	US$000	900 0	112 5	1 012 5	1 012 5
Kyrgyz labor	US$000	200 0	25 0	225 0	595 0
Kyrgyz material	US$000	100 0	12 5	112 5	125 7
Kyrgyz equipment	US$000	0 0	0 0	0 0	0 0
Total Overnight Capital Cost	US$000	1 200 0	150 0	1,350 0	1 733 2

Calculate Interest During Construction

Year of service		-2	-1	1	2	3
Calendar year		2001	2002	2003	2004	2005
Capital Expenditure Schedule, % of Overnight Capital Cost		50 0%	50 0%	0 0%	0 0%	0 0%
Western equipment	US$000	0 0	0 0	0 0	0 0	0 0
Russian equipment	US$000	506 3	506 3	0 0	0 0	0 0
Kyrgyz labor	US$000	261 8	279 1	0 0	0 0	0 0
Kyrgyz material	US$000	61 7	62 3	0 0	0 0	0 0
Kyrgyz equipment	US$000	0 0	0 0	0 0	0 0	0 0
Total annual expenditure	US$000	829 8	847 6	0 0	0 0	0 0
Cumulative annual expenditure	US$000	829 8	1 777 0	0 0	0 0	0 0
Interest accrued	US$000	99 6	213 2	0 0	0 0	0 0
Cumulative Capitalized Cost	US$000	929 4	1 990 3	0 0	0 0	0 0
Total Capitalized Cost = Loan Amount	US$000		1,990 3			

Capital cost real escalation rates		1995-2000	2001-2014
Western	%	0 0%	0 0%
Russian	%	0 0%	0 0%
Kyrgyz labor	%	16 9%	6 6%
Kyrgyz material	%	1 7%	0 9%
Kyrgyz equipment	%	1 5%	3 2%
Weighted Average Cost of Capital	%	12 0%	
Indirect Costs Owner s Costs and Contingency	%	12 5%	

Investment Cost Input Sheet

Loan #		2
Investment Description		New HOBs #2 - 3x50 Gcal/hr
In-Service Year (ISY = year 0)	January 1,	2005
Base Year for Capital Cost Estimates	January 1,	1995
Construction lead time	years	2
Useful life	years	35
Depreciation term	years	20
Loan repayment term	years	20

Overnight Capital Costs			Base Year		Installed Year
Component of Cost		Direct Costs	,O &C Costs	Total Costs	Total Costs
Western equipment	US$000	0 0	0 0	0 0	0 0
Russian equipment	US$000	2,700 0	337 5	3,037 5	3,037 5
Kyrgyz labor	US$000	600 0	75 0	675 0	2,028 4
Kyrgyz material	US$000	300 0	37 5	337 5	384 0
Kyrgyz equipment	US$000	0.0	0 0	0 0	0 0
Total Overnight Capital Cost	US$000	3,600 0	450 0	4,050 0	5,449 9

Calculate Interest During Construction

Year of service		-2	-1	1	2	3
Calendar year		2003	2004	2005	2006	2007
Capital Expenditure Schedule, % of Overnight Capital Cost		50 0%	50 0%	0 0%	0 0%	0 0%
Western equipment	US$000	0 0	0 0	0 0	0 0	0 0
Russian equipment	US$000	1,518 8	1,518 8	0 0	0 0	0 0
Kyrgyz labor	US$000	892 5	951 4	0 0	0 0	0 0
Kyrgyz material	US$000	188 6	190 3	0 0	0 0	0 0
Kyrgyz equipment	US$000	0 0	0 0	0 0	0 0	0.0
Total annual expenditure	US$000	2,599 9	2,660 5	0 0	0 0	0 0
Cumulative annual expenditure	US$000	2,599 9	5,572 3	0 0	0 0	0 0
Interest accrued	US$000	312 0	668 7	0 0	0 0	0 0
Cumulative Capitalized Cost	US$000	2 911 8	6,241 0	0 0	0 0	0 0
Total Capitalized Cost = Loan Amount	US$000		6 241 0			

Capital cost real escalation rates		1995 2000	2001-2014
Western	%	0 0%	0 0%
Russian	%	0 0%	0 0%
Kyrgyz labor	%	16 9%	6 6%
Kyrgyz material	%	1 7%	0 9%
Kyrgyz equipment	%	1 5%	3 2%
Weighted Average Cost of Capital	%	12 0%	
Indirect Costs Owner's Costs and Contingency	%	12 5%	

531

APPENDIX IV

HEAT SOURCE ALTERNATIVES FOR THE BISHKEK DISTRICT HEATING SYSTEM: GAS AND ELECTRODE MASS BOILERS

1.0 DISTRICT HEATING SOURCE ALTERNATIVES

In addition to examining decentralized alternatives (electric resistance heating and local gas fired boilers, See Section 2 4) to the current district heating system, Burns and Roe, jointly with AEP Energy Services, also explored different district heating source alternatives Under these scenarios, TES-1 would no longer provide heat for the district heating system The heating load of TES-1 would be replaced by the use of Electrode or Gas Mass boilers or a new Combined Cycle Plant Parts of the original district heating system would still be kept, depending on the scenario Under the mass boiler options, TES-1 would be retired completely The mass boilers would then supply the heat, and electricity would be supplied from the grid This grid power would most likely come from Krygyzstan's large hydroelectric power sources Under the Combined Cycle Plant option, the plant would generate electricity and make-up the capacity lost by the retiring of TES-1

1 1 Electric Mass Boiler Options

Under this alternative two different options are explored They both involve using electrode mass boilers to provide the heat and hot water for the city districts In the first option, the boilers are located at TES 1, while in the second, they are located at the existing pumping stations The following Table shows the thermal load for Bishkek for the year 1997, associated electrical demand, and the required electric transmission capacities This data is also presented in Section 2 2, Load Forecast It was taken from the most probable District Heating Load Forecast, Scenario 1B The 1997 District Heating load was chosen as the design heat load because this is the maximum load for the study period The future heat load is projected to go down as a result of district heating system efficiency improvement and dampening of heat demand due to future price increases

539

Anticipated Boiler Thermal Demand For Electrode Boilers

Boiler Station	*Thermal Load 1995 (MW_T)*	*Thermal Load 1997 (MW_T)*	*Electrical Demand[1] (MW_E)*	*Electric Transmission Design[2] (MW_E)*
No 1	88	96	98	108
No 2	74	81	83	91
No 3	95	104	106	117
No 4	59	65	66	73
No 6	59	65	66	73
No 7	160	175	179	197
No 8	233	255	260	286
No 9	172	188	192	211
No 11	108	117	119	131
TOTAL	1047	1146	1169	1287

[1] Electrical Demand is calculated from the thermal load assuming a 98% electrode boiler efficiency

[2] Electrical High Voltage Transmission Line Design includes a 10% design margin over the Electric Demand This table is only for design of electric Transmission and Distribution lines

538

Electrode Boilers

Electrode boilers generate steam (or hot water) by direct passage of an electric current through a stream of water Steam is created by resistance heating of the water Water is circulated within the boiler by a circulating pump which raises water from a boiler reservoir to a nozzle header From the nozzle header, the water flows by gravity through nozzles that direct streams of water to an electrode After striking an electrode, the water flows to a counter electrode mounted directly below the main electrode The water then flows back to the reservoir

The boiler output is controlled by varying the flow of water This can be done by throttling the pump output with a control valve, by varying the pump speed, or by adjusting the position of a control sleeve around the nozzle header to vary the number of water streams striking the electrode Large Electrode boilers typically operate at voltages from 4 16 to 25 kV and can be supplied directly from the distribution system

Figure IV-1 shows a schematic of typical electrode boiler station Two main closed loops are shown in the figure The first loop contains the electrode boilers, boiler feed pumps, the main district heating heat exchangers, and the drain tank Water is heated into steam in the electrode boilers and sent to the main district heating heat exchangers The steam is condensed in the heat exchangers, and the condensate drains into a storage tank It is then pumped back to the electrode boilers employing the boiler feed pumps A provision for makeup water is made for this loop to provide for water lost in boiler blowdown and system leakage The makeup water is supplied from the deaerated water storage tanks

The district heating water is returned to the boiler station by the district heating pumps and then sent to the main heat exchangers Deaerated makeup water is also added to the district heating water in the boiler stations to makeup for the loss of domestic water used by the population Makeup water for the system is supplied from city water supply The city water is first heated and then sent to softeners and filters to improve its chemical quality The water is heated again and sent to the atmospheric deaerator From the deaerator, the water is sent to a storage tank This water is then used as makeup for both the district heating water and electrode boiler water

The deaerated water storage tanks also work as accumulators The storage tanks are filled with deaerated water at night when the demand of domestic hot water is low During the morning hours when the domestic water demand peaks due to increased use by the city population, the storage tanks work as buffers to meet the variations in demand during a 24 hour period A pair of pressurizing pumps are provided to keep the system water pressure above the vapor pressure for the district heating water loop This is necessary to avoid the hot water (maximum water temperature 150 C) from flashing into steam, because such flashing would result in hot water transmission and distribution piping damage A dump line with a pressure control valve is provided to release over pressure from the district heating lines to the deaerated water storage tanks

539

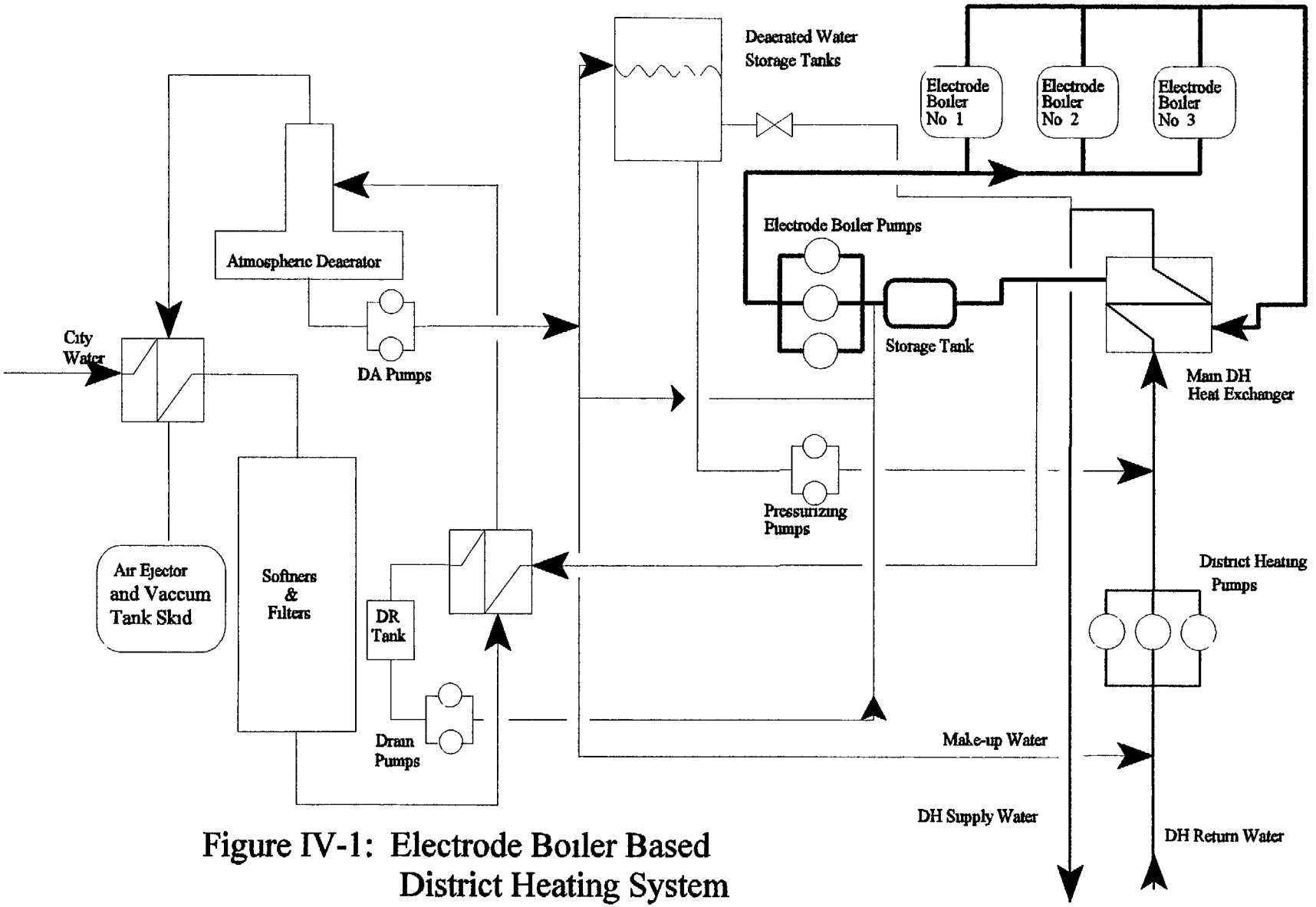

Figure IV-1: Electrode Boiler Based District Heating System

(a) Electrode Boilers Located at TES 1

The first electric heating option considers the use of electrode mass boilers placed at the TES 1 site Under this option, a group of mass electrode boilers will be housed at TES 1 which will provide all the heat and domestic hot water requirements for the city districts The current district heating hot water transmission and distribution piping will be used to transport the water to the existing booster pump stations, and then to the individual buildings

From the cost data it is obvious that the electric transmission line improvements comprise the largest part of the total cost This is because currently, the electrical transmission lines can only supply 200 MW of imported outside grid power to the city of Bishkek Over 1200 MW of electric power will be needed for the electrode boilers in the year 1997 Significant enhancements to the existing 500 kV transmission system are required to adequately transmit the electrical power from the proposed generation sites in the southern regions of the country to the city of Bishkek In addition, the large electrical peak demand will require direct supply for the electrode boilers from the 500 kV transmission line brought into the city of Bishkek The required electric transmission system reinforcement for the electrode boiler option is shown in Figure IV-2 The electrode boiler conceptual transmission expansion plan and the required electrical transformation capacities are also listed in the Tables

The transmission system expansion plan was modeled in a power flow simulation program to examine the distribution of power flow over the 500 kV network The reinforcement has been designed such that the loss of a major 500 kV facility would not result in any remaining facilities exceeding their emergency ratings Under winter conditions, when the peak load on the district heating system is expected to occur, the emergency rating can be as high as 140% of the conductor's normal rating The question of the steady-state stability of the proposed transmission system configuration was not addressed Due to the critical nature of the Central Asian 500 kV transmission ring, a thorough analysis would require detailed representation of the entire 500 kV system in Central Asia This analysis is beyond the scope of this work

The proposed electric transmission and distribution expansion plan will include approximately 500 km of 500 kV transmission lines The plan also would require three new 500 kV substations and 1500 MVA of 500/220/25 kV transformer capacity Reactive power correction in the form of shunt capacitors would also be required to provide adequate voltage support

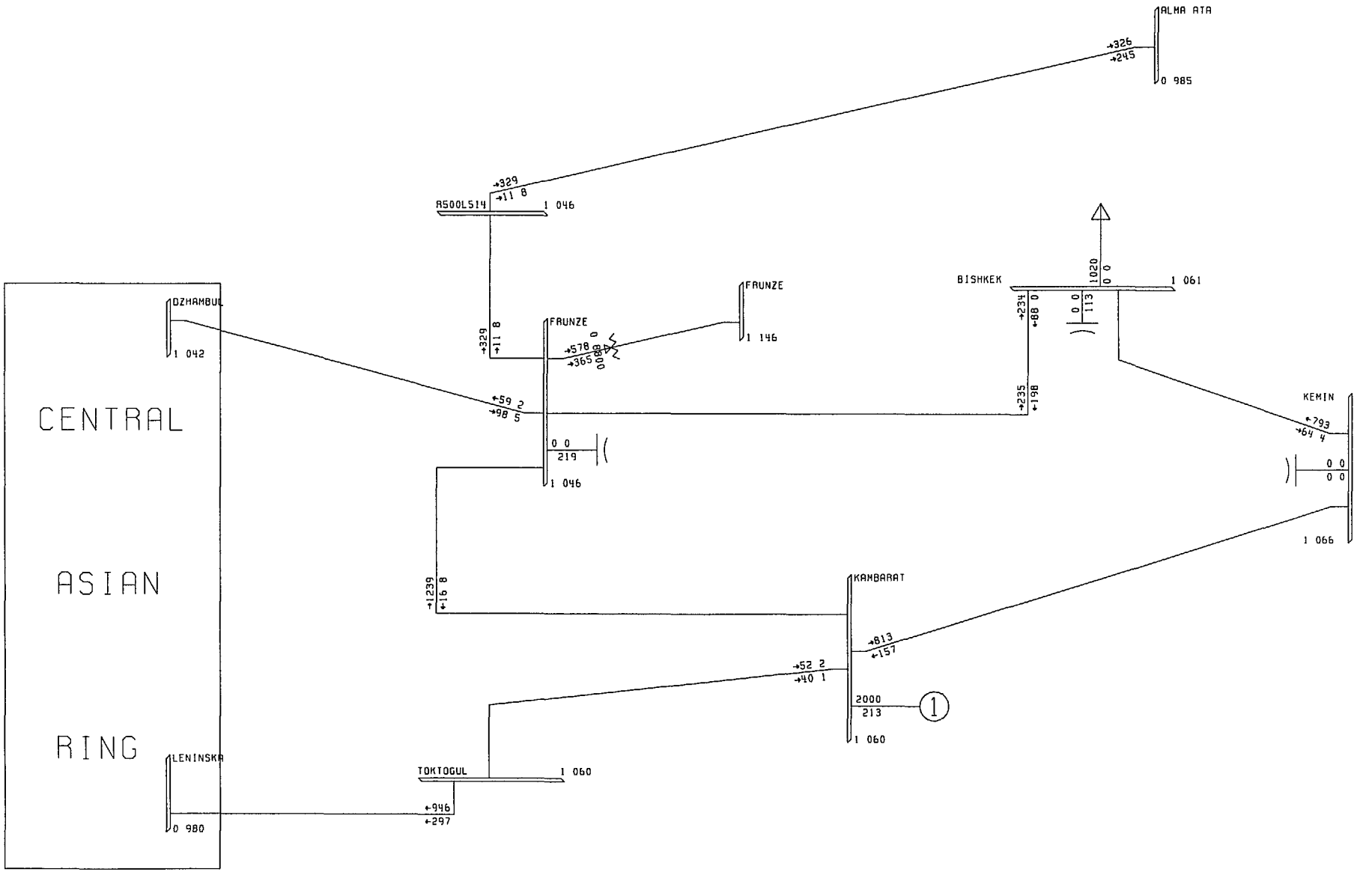

FIGURE **IV-2**

POWER TECHNOLOGIES INC	ELECTRODE BOILER CASE -- EHV TRANSMISSION REINFORCEMENT MODE 1997 WINTER - 1900 MW BOILERS BOILERS AT TES 1 OPTION THU, NOV 16 1995 00 24	6	BUS - VOLTAGE (PU) BRANCH - MW/MVAR EQUIPMENT - MW/MVAR

Electrode Mass Boiler Cost Data: Option 1

(Boilers Located at TES #1)

Design Load for 1997 (MW_T) ***TOTAL***	*Needed Capacity (MW_T)* ***TOTAL***	*Size and No of Units* ***TOTAL***
1146	1146	23 x 50 MW_T

Cost of Boilers‡, Thous USD	*Cost of District Heating System Upgrades, Thous USD*	*Cost of Electric Transmission Upgrade**, Thous USD*	*Total Cost, Thous USD*
$14,000	$25,200	$166,600	$205,800

‡ This cost includes upgrading of the plant with the new boilers, water storage tanks, and a 20% allowance for shipping, insurance, handling, etc

** This cost includes all electric transmission improvements including 500 kV and associated electric transformer stations This excludes Kambarata plant integration with Toktogul-Frunzenskaia 500 kV line

543

New Transmission Line Requirements

(Boilers Located at TES 1)

Transmission Line	*Conductor Type*	*Length (km)*	*Rating (MW)*	*Cost, Thous USD*
500 kV Supply				
Frunzenskaia Bishkek TES 1	AC-3-300	125	1740	$32,700
Bishkek-Kemin	AC-3-300	110	1740	$25,100
New Generation Integration				
Kambarata - Kemin	AC-3-300	260	1740	$81,200
			TOTAL	$139,000

New Station and Transformer Requirements

(Boilers Located at TES #1)

Location	*Capacity*	*Cost, Thous USD*
Bishkek TES #1 500/25kV	1500 MVA [3x500]	$23,700
Kemin 500 kV		$ 3,900
	TOTAL	$27,600

(b) Electrode Boilers Located at the Pumping Stations

Under the second option, electrode mass boilers are to be placed at the locations of the current pumping stations At these stations the boilers would heat the district heating return water and then pump it to the individual buildings through the local heat substations With this option, the hot water transmission piping from TES #1 to the pumping stations would not be used, only the existing, smaller diameter distribution lines will still be used

The following Table shows a budgetary cost estimate for this option The main cost item in this cost estimate is still the new electric transmission and distribution lines As indicated before, significant enhancements to the existing 500 kV transmission system are required to adequately transmit the electrical power to the city of Bishkek In addition, the large electrical peak demand will require the development of an extensive 220 kV distribution system to directly supply the electrode boilers The required electric transmission system reinforcement for this electrode boiler option is shown in Figure IV-3 The electrode boiler conceptual transmission expansion plan and the required electrical transformation capacities for this option are also given in Tables The electric transmission and distribution costs associated with this option are larger when compared with the first option since more distribution lines are required to carry electric power to all ten pumping stations as opposed to carrying electric power to all electrode boilers located at one location (at TES 1 site)

54

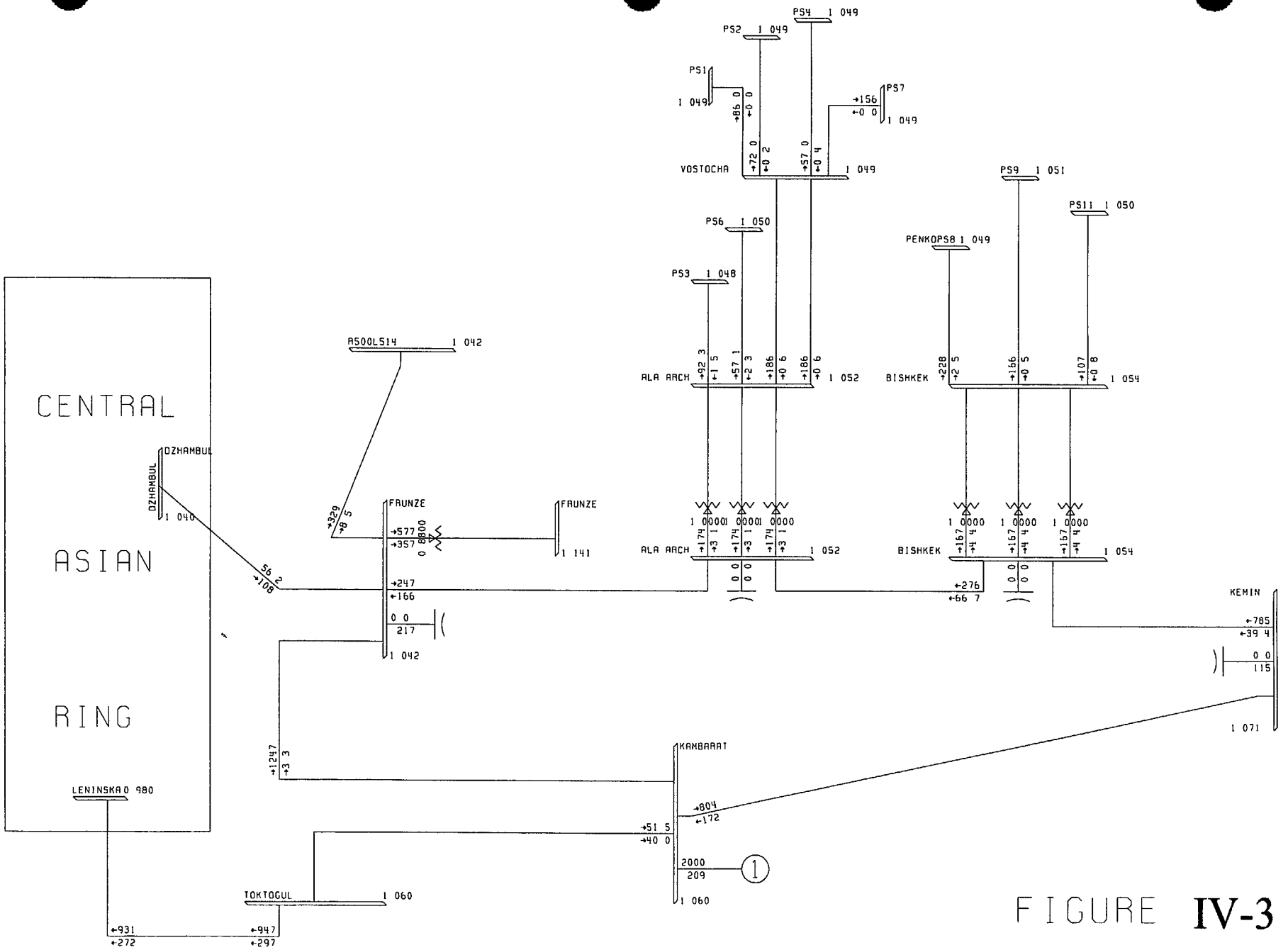

FIGURE **IV-3**

POWER TECHNOLOGIES INC

ELECTRODE BOILER CASE -- EHV TRANSMISSION REINFORCEMENT MODE
1997 WINTER - 1900 MW BOILERS - DISTRIBUTED OPTION
THU NOV 16 1995 00 28

BUS - VOLTAGE (PU)
BRANCH - MW/MVAR
EQUIPMENT - MW/MVAR

546

Electrode Mass Boiler Cost Data: Option 2

(Boilers Located at Current Pumping Stations)

Boiler Station	*Needed Capacity (MW_T)*	*Size and No of Units*	*Cost of Boiler Stations‡, Thous USD*	*Cost of Electric Transmission Upgrade**, Thous USD*	*Total Cost, Thous USD*
No 1	96	2 x 50 MW_T	$1,200	$500	$1,700
No 2	81	2 x 40 MW_T	$960	$500	$1,460
No 3	104	2 x 50 MW_T	$1,200	$2,900	$4,100
No 4	65	2 x 40 MW_T	$960	$700	$1,660
No 6	65	2 x 40 MW_T	$960	$2,900	$3,860
No 7	175	4 x 50 MW_T	$2,400	$700	$3,100
No 8	255	5 x 50 MW_T	$3,000	$2,900	$5,900
No 9	188	4 x 50 MW_T	$2,400	$2,200	$4,600
No 11	117	3 x 40 MW_T	$1,440	$2,200	$3,640
New 500 kV Transmission Lines (4 Lines, 476 km Total Length), Transformers (2) and Ala Archa-Vostochnaia 220 kV line				$191,000	
Upgrade of District Heating System			$25,200		
TOTAL	1146	-	$39,720	$206,500	$246,220

‡ This cost includes upgrading of the pumping stations with the new boilers, water storage tanks, rehabilitation of the hot water distribution lines, and a 20% allowance for shipping, insurance, handling, etc **This cost includes all electric Transmission & Distribution improvements, except integration of Kambarata plant into Toktogul-Frunzenskaia 500 kV line

New Transmission Line Requirements

(Boiler Located at Current Pumping Stations)

Transmission Line	*Conductor Type*	*Length (km)*	*Rating (MW)*	*Cost, Thous USD*
500 kV Supply				
Frunzenskaia-Ala Archa	AC-3-300	100	1740	$25,100
Ala Archa-Bishkek	AC-3-300	16	1740	$4,000
Bishkek-Kemin	AC-3-300	100	1740	$25,100
220 kV Distribution				
Ala Archa - Boiler Station No 3	AC-300	20	270	$2,900
Ala Archa - Boiler Station No 6	AC-300	20	270	$2,900
Ala Archa - Vostochnaia	[AC-2-300]	15	550	$3,800
Vostochnaia - Boiler Station No 1	AC-300	2	270	$500
Vostochnaia - Boiler Station No 2	AC-300	2	270	$500
Vostochnaia - Boiler Station No 4	AC-300	3	270	$700
Vostochnaia - Boiler Station No 7	AC-300	3	270	$700
Bishkek - Boiler Station No 8	AC-300	20	270	$2,900
Bishkek - Boiler Station No 9	AC-300	15	270	$2,200
Bishkek - Boiler Station No 11	AC-300	15	270	$2,200
New Generation Integration				
Kambarata - Kemin	AC-3-300	260	1740	$81,200
			TOTAL	$154,700

547

New Station and Transformer Requirements

(Boiler Located at Current Pumping Stations)

Location	*Capacity*	*Cost, Thous USD*
Ala Archa 500/220 kV	1500 MVA [3x500]	$24,200
Bishkek 500/220 kV	1500 MVA [3x500]	$23,700
Kemin 500 kV		$ 3,900
TOTAL		$51,800

1.2 Gas Mass Boiler Option

Gas Boilers Located at the Pumping Stations

Under this option large gas boilers will be placed at the existing pumping stations to provide heat and hot water to the ten city districts in Bishkek In this option, the hot water transmission piping from TES 1 currently being used by the district heating system will be retired, and only the smaller diameter distribution piping will be used This piping will be refurbished to replace the leaky pipes and deteriorated thermal insulation

The schematic diagram for the gas fired boiler stations will be essentially the same as that for the electrode boilers Both types of boilers would produce steam which will be condensed in the heat exchangers to heat the return district heating water Therefore, a separate diagram for gas fired boilers is not provided Under both schemes, hot water storage would need to be provided at the boilers stations to provide the hot water during peak demand periods Cost of the hot water storage tanks have been included in the budgetary cost estimates

At the present, natural gas is used in the city of Bishkek for industrial use and for cooking in apartments Some of the industries using gas are glass manufacturing, chemicals and agricultural products factories The hot-water peaking boilers at TES 1 and TES 2 also use natural gas as fuel Currently, only 124 apartments buildings and some private homes use natural gas for comfort heating

At the present time, there is a 720 millimeter cross-country gas line, located 20 km from Bishkek, that runs from Uzbekistan to the city of Almaty in Kazakhstan All the existing gas pipelines in the City of Bishkek are fed from this transmission line These two main distribution lines supply gas to the eastern and western parts of the city The line serving the western districts of the city has a diameter of 219 mm, while the eastern districts are supplied with a 720 mm diameter line

Located 20 km outside the city of Bishkek is a gas compressor station At this station the natural gas pressure of the transmission line is increased from 25 atmg to 35 atmg Currently, there are only three main consumers using natural gas These are TES 1, TES 2 and the Frunze boiler plant Both TES 1 and TES 2 require a natural gas pressure of 3 atmg, while the Frunze plant only requires a pressure of 1 atmg

The Kyrgyz Republic consumes approximately 1 4 billion cubic meters of gas per year at the present time The use of decentralized mass gas boilers will greatly increase these figures The following Table shows proposed locations of the gas boilers and their estimated gas consumption under the decentralized gas heating scheme

552

Gas Mass Boilers Option: Gas Consumption

Western City Districts		
Location	*Gas Consumption, m^3/h*	*Pipe Line Diameter, mm*
TES 2	42,500	219
Frunze Plant	32,700	219
Boiler Station No 1*	14,400	426
Boiler Station No 3*	15,500	425
Boiler Station No 6*	9,500	425
Boiler Station No 8*	38,600	530
TOTAL	153,200	
Eastern City Districts		
TES 1	65,400	720
Boiler Station No 2*	12,000	426
Boiler Station No 4*	9,600	325
Boiler Station No 7*	26,400	530
Boiler Station No 9*	24,700	426
Boiler Station No 11*	18,500	530
TOTAL	155,400	

* = With the proposed mass gas boilers installed

This alternative will require an expansion of the current natural gas pipeline system that supplies the city of Bishkek New pipelines will need to be added to connect from the current distribution lines to the new boilers at the pumping stations The current distribution line that supplies the western city districts will need to be enlarged to handle the increased volume of gas The existing 720 mm line which supplies the eastern districts will not need replacement

Along with the expansion of the natural gas lines, the current pumping stations will also need to be refurbished Since the gas boilers will be located at the present pumping stations, these facilities must be expanded to accommodate the new boilers, water storage tanks, and other related equipment The existing hot water distribution piping will be used under this option,

55

and will need rehabilitation The Table below shows budgetary cost estimates for this option

Gas Mass Boiler Cost Data

(Boilers Located at the Current Pumping Stations)

Boiler Station	*Gas Line Length to Boiler, km*	*Pipe Cost in Thous USD*	*Boiler Cost in Thous USD*	*Total Cost, Thous USD*
Gas Transmission Header	11 8	$3378		$3378
No 1	1 8	$500	$4,300	$4,800
No 2	1 1	$307	$3,700	$4,007
No 3	0 45	$136	$4,700	$4,836
No 4	0 2	$60	$2,900	$2,960
No 6	0 9	$262	$2,900	$3,162
No 7	0 15	$46	$7,900	$7,946
No 8	0 3	$100	$11,500	$11,600
No 9	0 81	$242	$8,300	$8,542
No 11	0 3	$91	$5,400	$5,491
Upgrade of District Heating System				$25,200
Rehabilitation of Main Gas Transmission Line				$20,000
TOTALS	17 81	$5,122	$50,250	$101,922

552

Summary of Mass Boiler Options

The following Table shows a summary of the costs associated with all the district heating source alternatives explored in this section The table shows that the lowest capital costs are associated with the option of the gas mass boilers located at the existing pumping stations The costs associated with the gas boilers option are approximately one-half to one-third the cost of the electric mass heating options This large cost difference is due to the massive improvements in the electric transmission and distribution systems needed to handle the more than 1200 MWe increase in electrical load from the use of electric boilers The cost of the electric transmission and distribution upgrades approximately 200 Million US Dollars This cost includes the total cost of the 500 kV transmission system reinforcements required to bring the power supply to the northern region The cost of the electric heating options would be increased by approximately 100 million USD if the Kambarata plant integration with the Toktogul-Frunzenskaia 500 kV line are included in the analysis

Costs Summary: Mass Boilers Option

District Heating Alternative	*Associated Cost, USD*
Electrode Mass Boilers Located at TES 1	$205,800,000
Electrode Mass Boilers at the Pumping Stations	$246,200,000
Gas Mass Boilers at the Pumping Stations	$101,922,000

552

IMPORTANT

Please Insert The Corresponding Section From the October 20, 1995 Version of this Report

IMPORTANT

554

Appendix G

Transmission System Performance

1 0 TRANSMISSION SYSTEM PERFORMANCE

The results of a power flow calculation for 1997 winter conditions, prior to implementation of the proposed reinforcement program, is presented in Exhibit G-1 The power flows on the 220 kV and 110 kV transmission system serving the City of Bishkek are displayed The generation dispatch at Bishkek TES 1 is 280 MW

The results of a power flow calculation for 1997 winter conditions, following implementation of the proposed reinforcements, is presented in Exhibit G-2 As shown on Exhibit G-2, the Ala Archa substation provides 150 MW to the City 110 kV system This new source reduces the Glavnaia 220/110 kV transformer flows by a total of 63 MW The 110 kV system voltages are improved by three to five percent

It is anticipated that an operating procedure to balance the load among the two 220/100 kV sources serving the City, i e , Glavnaia 220/110 kV and Ala Archa 220/110 kV will need to be developed by KNEHC The operating procedure will need to reflect 1) the effect of the generation dispatch at Bishkek TES 1 (in this case it is dispatched at 280 MW), 2) the load in the City, and 3) the load in the Northern region The objective of the operating procedure should be to balance the loadings on the Kara Balta-Glavnaia 220 kV and Frunzenskaia-Ala Archa 220 kV lines, until such time that a second 220 kV line can be constructed from Frunzenskaia to Ala Archa

From inspection of Exhibit G-2, the power flow on the Chuiskaia 220/110 kV transformer is 20 MW This power flow helps to support the Kant-Ivanovka 110 kV line Inspection of Exhibit G-2, however, reveals the Kant-Ivanovka 110 kV line flow increased by 12 MW, from 128 MW to 140 MW This increase would have been greater if not for the Chuiskaia 220/110 kV development The introduction of Ala Archa substation has the effect of reducing support to Bystrovka The Chuiskaia substation counteracts this effect by strengthening the support to the Tok Mak area provided by the Glavnaia-Bystrovka 220 kV line

BISHKEK 220/110 KV NETWORK (WESTERN)

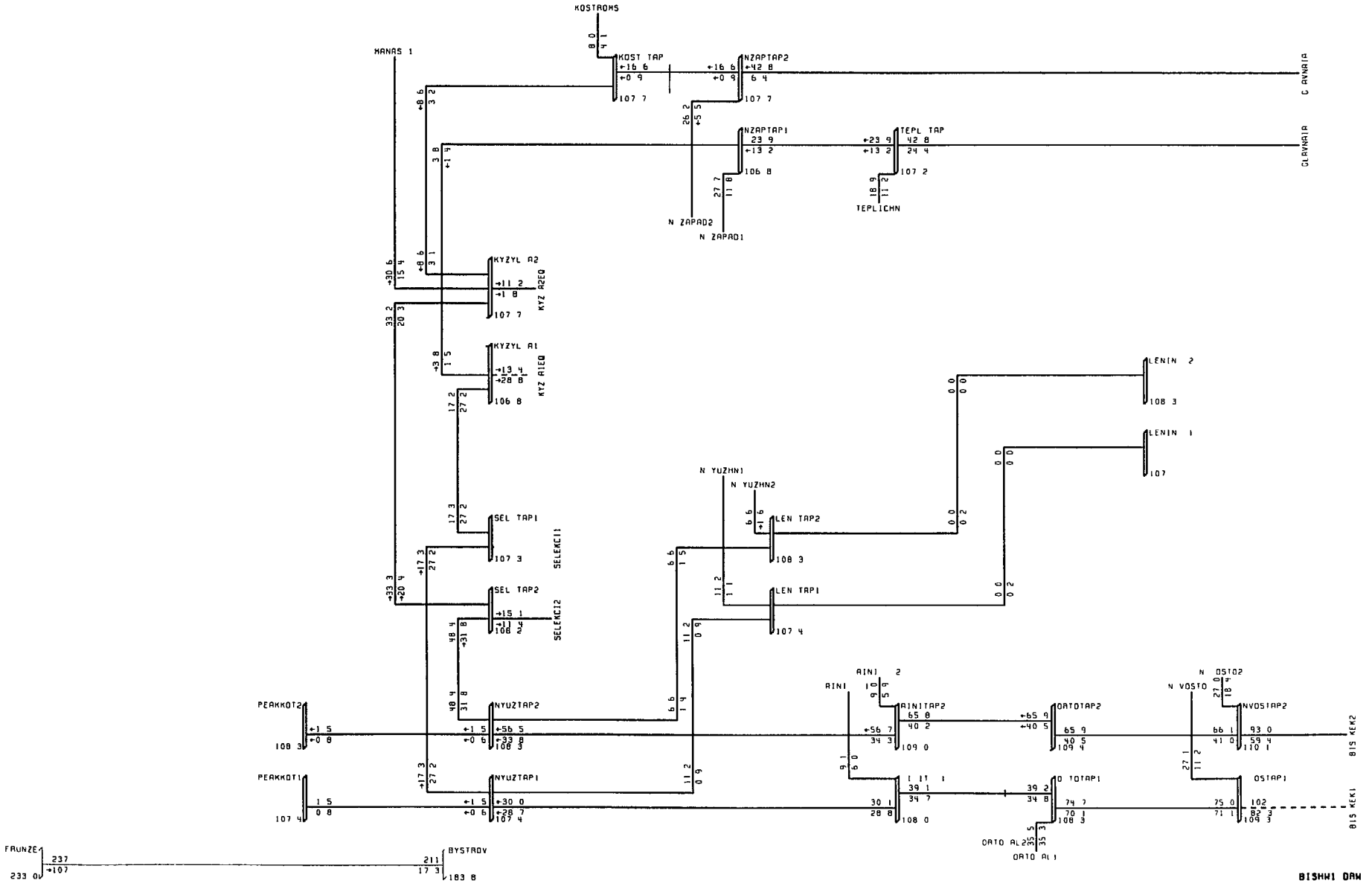

	KSEC POWER FLOW CASE -- EHV BISHKEK & KALININ AREA MODEL 1997 WINTER EXPECTED PEAK -- NO REINFORCEMENTS 1997 WINTER - NO REINFORCEMENT MON OCT 09 1995 14 45	100/ RATEA 0 950UV 1 050OV KV ≤110 ≤220 ≤999	BUS VOLTAGE (KV) BRANCH MW/MVAR EQUIPMENT MW/MVAR

Exhibit G1
(Sheet 1 of 2)

1

557

BISHKEK 220/110 KV NETWORK (EASTERN)

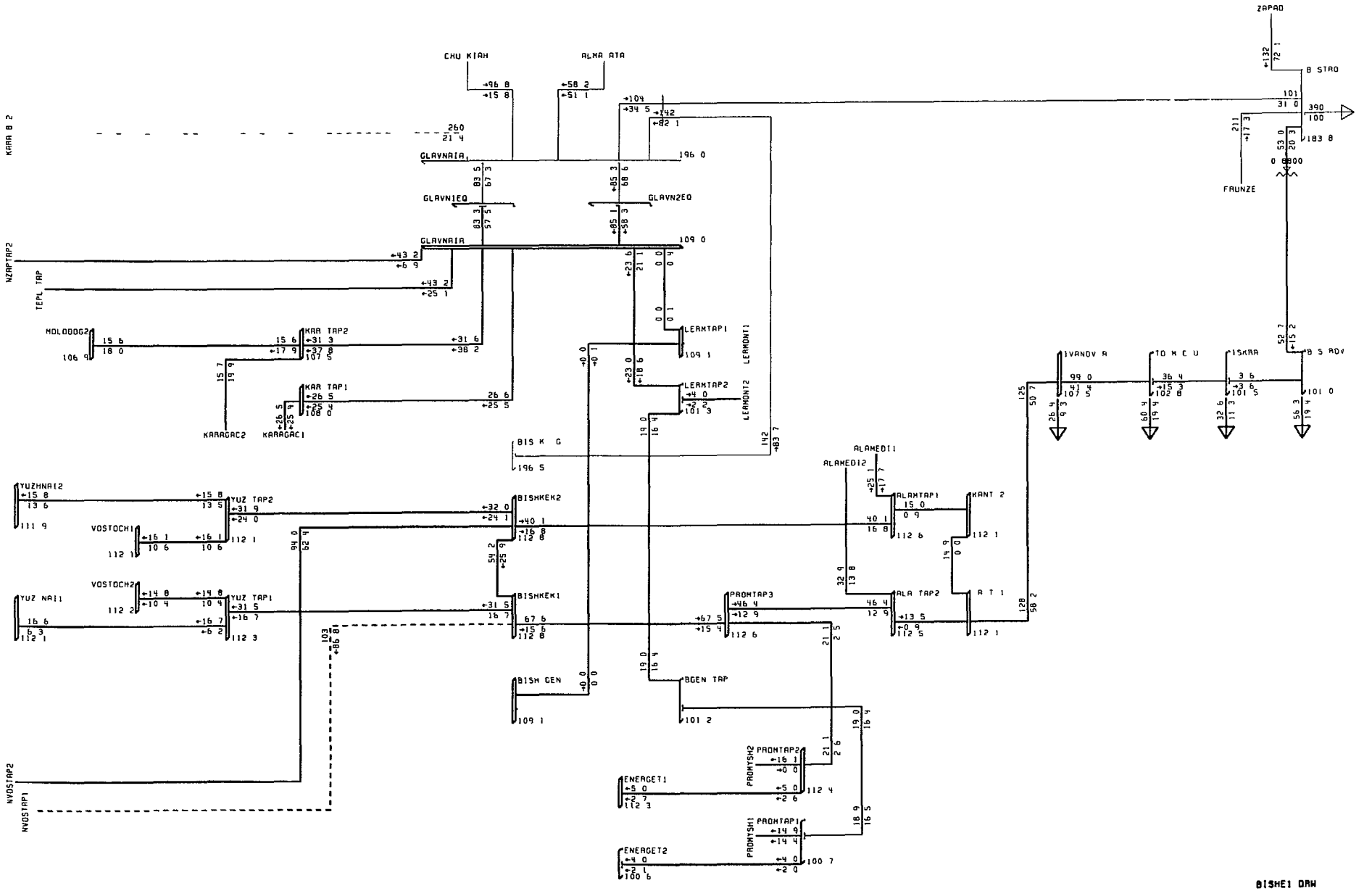

KSEC POWER FLOW CASE -- EHV BISHKEK & KALININ AREA MODEL
1997 WINTER EXPECTED PEAK -- NO REINFORCEMENTS
1997 WINTER - NO REINFORCEMENT MON OCT 09 1995 16 36

LOQ/ RAIEA
0 950UV 1 050 0V
KV ≤110 ≤220 ≤999

BUS - VOLTAGE (KV)
BRANCH - MW/MVAR
EQUIPMENT MW/MVAR

Exhibit G1
(Sheet 2 of 2)

2

BISHKEK 220/110 KV NETWORK (WESTERN)

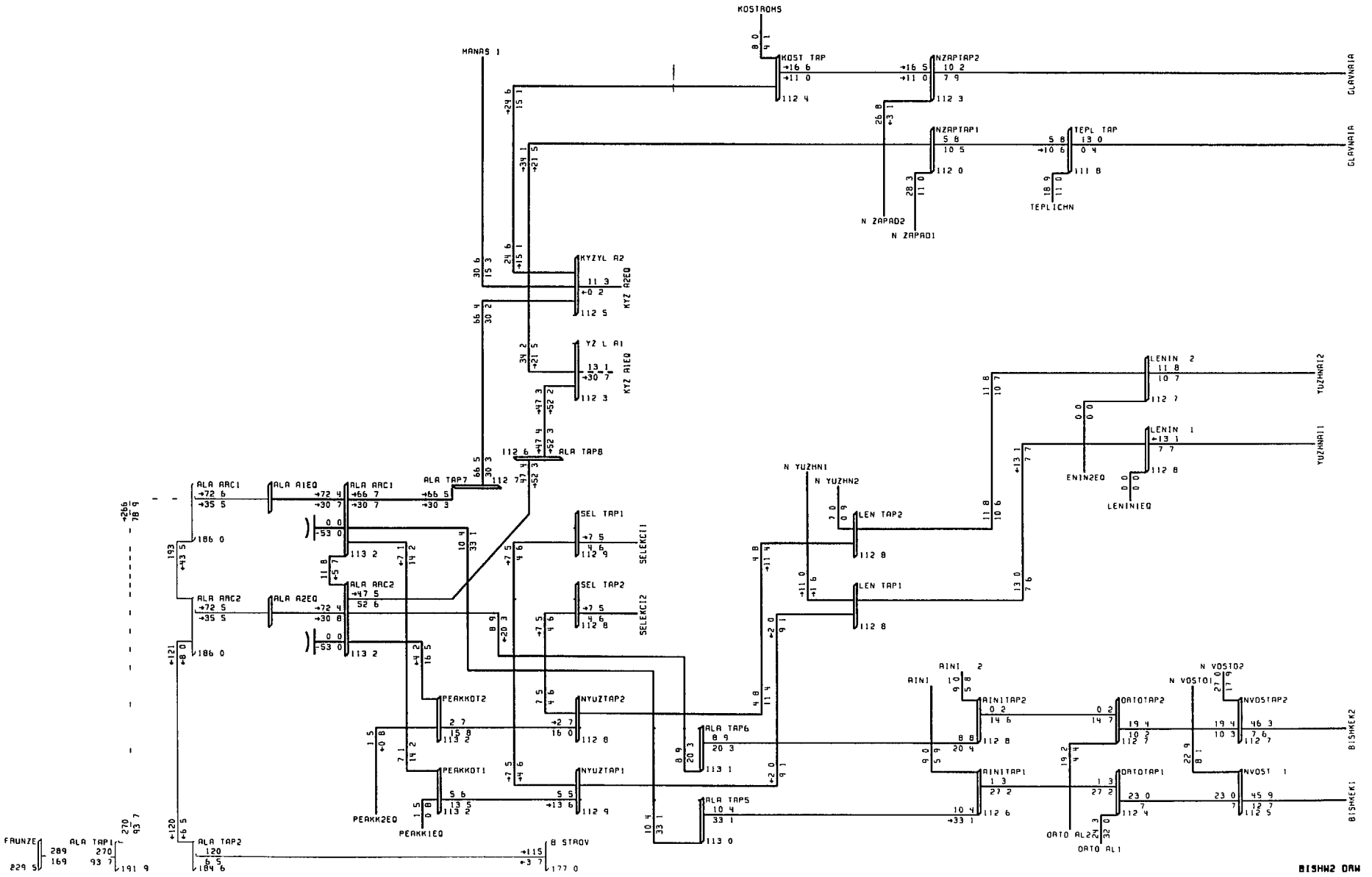

KSEC POWER FLOW CASE -- EHV BISHKEK & KALININ AREA MODEL
1997 WINTER EXPECTED PEAK -- WITH REINFORCEMENTS
1997 WINTER - W/ REINFORCEMENT MON OCT 09 1995 14 43

100/ RATEA
0 950UV 1 050 0V
KV ≤110 ≤220 ≤999

BUS VOLTAGE (KV)
BRANCH MW/MVAR
EQUIPMENT MW/MVAR

Exhibit G2
(Sheet 1 of 2)

3

559

BISHKEK 220/110 KV NETWORK (EASTERN)

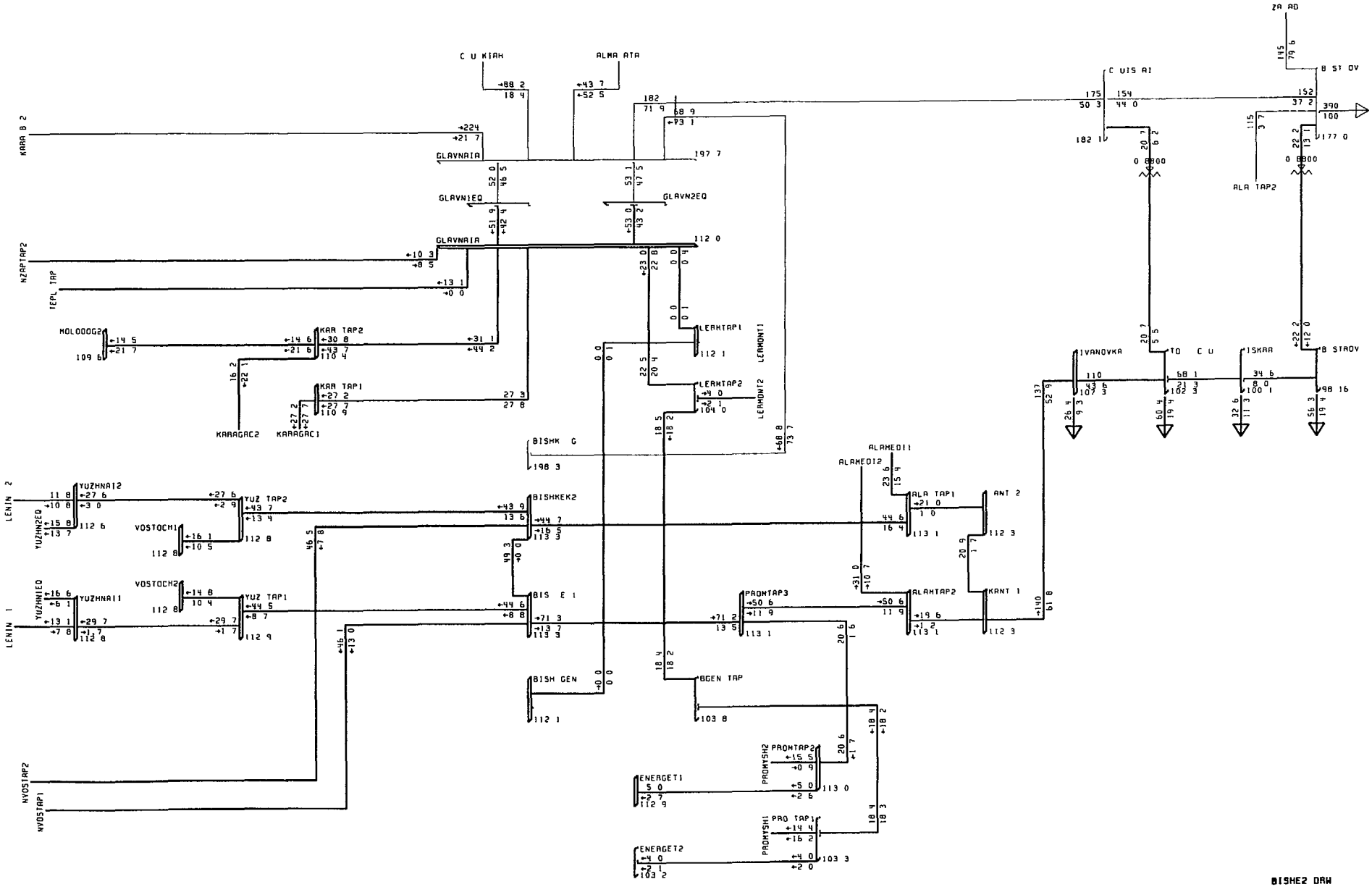

KSEC POWER FLOW CASE -- EHV BISHKEK & KALININ AREA MODEL
1997 WINTER EXPECTED PEAK -- WITH REINFORCEMENTS
1997 WINTER - W/ REINFORCEMENT MON OCT 09 1995 16 37

100/ RATEA
0 950UV 1 050 OV
KV ≤110 ≤220 ≤999

BUS - VOLTAGE (KV)
BRANCH MW/MVAR
EQUIPMENT - MW/MVAR

Exhibit G2
(Sheet 2 of 2)