PN-ACF 498

5928-01

Feasibility Study

Armenia: Power Supply / Conservation Program

Yerevan Plant Repowering

Final Report

Submitted to:

U.S. Agency for International Development

The Government of Armenia

Contract No
CCN-0002-Q-09-3154-00
Heat and Power System Efficiency Improvements
Delivery Order No. 28

September 1998

Prepared by:

Burns and Roe Enterprises, Inc.

Achievements in engineering and construction since 1932

ACKNOWLEDGMENTS

Burns and Roe acknowledges with appreciation the following persons whose cooperation and participation has contributed to the successful completion of this Project Feasibility Study

- William Smith and Mervyn Farroe of USAID/Armenia for their assistance and views on project implementation and direction

- Mr G Galustian, Deputy Minister - Ministry of Energy and Fuel for his timely approvals and general overview of the project

- Mr Robert Kharazian, Head of R&D Department - Ministry of Energy and Fuel for his general project perspectives

- Mr H Hovanissian, Director of Yerevan CHP Plant for his full support, continuing discussion and provision of data on a timely basis

- Mr Arthur, Acting Chief Engineer of Yerevan CHP Plant for his participation technical discussions

- Special thanks are extended to Mr Gagik Danielian, Burns and Roe Yerevan Office Manager, who was responsible for the overall coordination of site visits and facilitation of discussions between power plant representatives, government officials, and the assessment team In addition, the Burns and Roe Yerevan staff provided timely translation and administrative assistance

YEREVAN CHP PLANT

REPUBLIC OF ARMENIA

COMBINED CYCLE REPOWERING PROJECT

FEASIBILITY STUDY REPORT

INDEX

Technical Analysis

Financial, Economic and Risk Analysis

Preparation of Bidding Documents

Environmental Assessment

TABLE OF CONTENTS

Subtask A - Technical Analysis

Section	Item	Page
A 1	Evaluation of Existing Site Conditions and Rehabilitation Scenarios	A-1
	a Description of CHP Plant	
	b Life Expectation and Future Rehabilitation Program	
	c Repowering Plan	
A 2	Screening Analysis	A-5
	a Rationale for Re-use of existing CHP equipment	
	b Evaluation of Combined Cycle Configuration	
	c Final System Design Selection	
A 3	Project Cost Estimate	A-11
	a Capital Cost Estimate	
	b EPC Contract Cash Flow Schedule	
	c Annual Operating and Maintenance Cost Estimate	
A 4	Project Implementation	A-20
	a Project Development	
	b Construction Staffing Plan	
A 5	Procurement Plan	A-33
A 6	Project Implementation Schedule	A-62
A 7	Operating Plan	A-63

Appendix - Field Sketches and Site Drawings

A 1 Evaluation of Existing Site Conditions and Rehabilitation Scenarios

a Description of CHP Plant

This evaluation addresses the performance of electrical generating facilities only and does not include assessments or recommendations for improving the process steam or central heating steam systems

Detailed analyses of the Yerevan CHP facilities have been prepared by Lahmeyer et al, and are presented in their first report, dated November 1996 entitled "1996 Update of Least Cost Power Investment Program From that analysis it has been concluded that extensive remediation is required on all the existing facilities to improve their life cycles, and only as a last resort prior to virtually complete replacement in the time frame 2001-2005

The plant is comprised of two - 150 MW Power Boilers and their associated STG's and surface condensers plus five - 50 MW boilers and STG's, which are operated in a back-pressure mode to supply district heating and industrial process steam, as well as additional electric power Balance of plant services include gas fuel and liquid fuel supply cooling water from natural draft cooling towers, demineralized water, instrument air and a 110 kV outdoor switchyard All equipment is of Russian design and dates back to the 1960's

b Life Expectation and Future Rehabilitation Program

The most recent review of the CHP plant condition is as follows

Existing units condition (as of February 1, 1998)

Turbine	Hours	Comments
1	184,162	Scrap 2001
2	191,966	Scrap 2001
3	15,000	New turbine 1989
4	152,150	World Bank, 1998 rebuilt turbine and boiler
5	173,242	World Bank, 1997 rebuilt turbine and boiler
6	157,000	Scrap 2001
7	171,000	Scrap 2001

A least cost evaluation has demonstrated that excessive expenses would be incurred using original manufacturer's replacement parts (if available) to attempt to extend the service life of the existing units It is also expected that this attempt would severely compromise reliability and availability of the plant

Infusion of World Bank funding to extend the service life of Units 3, 4, 5 has enabled them to operate in district heating service

Replacement of Units 6 and 7 would occur through re-powering, where a gas turbine combined cycle power plant whose scope would include the rehabilitation of existing BOP facilities required to support these new units, would be constructed Remediation to support existing CHP equipment exclusively is not within the Scope of Work

The detailed evaluation of rehabilitation and remediation are presented in the Lahmeyer Report PM-04 of August 1994

The following table gives a cost summary of the rehabilitation measures identified during the technical audit of the plant in May 1994 Urgently required measures are needed to keep Section 2 (existing Units 6 and 7) of the plant in running condition through 1998 Recommended measures comprise a partial overhaul and modernization of the plant which are needed to extend its lifetime until 2002 Costs in 1998 US $ would be 12 5% higher than the costs listed in the following table or $13,460,000 Costs exclude switchyard rehabilitation This value was not determined

Rehabilitation Measures	Cost in 1994 US $		
	Local	Foreign	Total
Urgently Required Measures			
- Mechanical Equipment	65,000	3,135,000	3,200,000
- Electrical Equipment	1,000	10,000	11,000
- Control and Instrumentation	21,000	411,000	432,000
- Miscellaneous Works	1,000	36,000	37,000
Subtotal Urgently Required Measures	88,000	3,592,000	3,680,000
Recommended Measures			
- Mechanical Equipment	184,000	5,229,000	5,413,000
- Electrical Equipment	114,000	2,270,000	2,384,000
- Control and Instrumentation	19,000	382,000	401,000
- Miscellaneous Works	3,000	78,000	81,000
Subtotal Recommended Measures	320,000	7,959,000	8,279,000
Total for Rehabilitation Measures	**408,000**	**11,551,000**	**11,959,000**

c Repowering Plan

The repowering plan for the Yerevan CHP is a component subject of the Development Plan for improving the entire Armenian electric power sector The Development Plan had been funded

by the World Bank in 1994 and published in 1996 Most of the plans have not been implemented due to lack of investment capital and the non-resolution of existing political impediments (i e relations between bordering states have not been normalized)

Therefore, the conclusion that has been reached and which forms the basis for this Feasibility Study is

> "The Least Cost Plan without a new nuclear power plant will require three - 167 MW combined cycle power plants to be added, 2 units in Yerevan in 2005 and one unit in Hrazdan in 2008"

Only the Yerevan rehabilitation is addressed in this report

Absent nuclear plant generation, and at plant annual operating factors of 80% or greater, the Combined Cycle Gas Turbine (CCGT) re-powered generating facility is the least electrical generating cost option

A 2 Screening Analysis

a Evaluation of the re-use of existing CHP equipment

As part of the screening analysis, the re-use of an existing (or refurbished) 150 MW/160 MW K-160 steam turbine generator has been considered whereby it would operate on HP throttle steam from a new Gas Turbine (GT) and Heat Recovery Steam Generator (HRSG)

The K-160 turbine is a straight condensing unit (i e , no process or DH extraction) by design, the main steam and reheat steam temperatures have been derated from 565°C to 538°C so the unit has an output of approximately 150 MW (instead of 160 MW) Based on the original steam turbine heat balance diagram, the following steam conditions apply

Main Steam	Flow	121 1 kg/s	(436 t/h)
	Press	127 4 bar	(89 2 MPa)
	Temp	538°C	
Reheat Steam	Flow	115 kg/s	(0 95 x W_{MS} = 414 t/h)
	Press	27 6 bar	(19 3 MPa) (IP turb Inlet)
	Temp	538°C	

Final feedwater temperature 228°C

This is an efficient steam cycle, as designed, with 565 5°C steam temperatures and 8 stages of feedwater heating

Because this turbine is a reheat unit with 538°C superheat and reheat temperatures, the steam source must operate at HP steam temperature of about 540°C (to account for temperature loss from the source outlet to steam turbine inlet) In addition, to account for a pressure drop of about 6 5 bar in the main steam piping and in the superheater, the HP drum pressure should be about 133 9 bar At this pressure the saturation temperature is 333°C

Because of the above steam temperatures and the reheat required, only HRSGs coupled to advanced "F" technology combustion turbines which have high exhaust temperatures to provide reheat capability can be considered These combustion turbines are

ABB GT 26
GE 6FA, 9FA
MHI 701 F2
Siemens (KWU) V64 3A, V94 2A
W 701F

"G" technology was not considered

The significant parameters of these "F" technology machines at ISO conditions are shown in Table A 2-1

Table A 2-1

"F" TECHNOLOGY GT PERFORMANCE PARAMETERS AT ISO CONDITIONS
(Open Cycle)

Model	Output [MW]	HR (LHV) [kJ/kWh]	Exh Flow [kg/sec]	Exh Temp [°C]
ABB GT 26	251	8910	562 7	610
GE 6FA	70 1	10,527	205 5	589 4
GE 9FA	250 4	9,862	646 4	609 4
MHI 701F2	253 7	9704	653 2	578 9
Siemens V64 3A	70 0	9860	190 5	571 1
Siemens V94 3A	255	9349	641 8	641 1
W 701F	252 5	9641	660 6	566 7

If the existing heater cycle, including deaerator is re-used, then the schematic cycle diagram would be as shown in Figure A-2 1 There is no IP drum in the HRSG (as would be the case with a new Western style optimized cycle) The temperature/area (T/A) diagram of the HRSG would simulate Figure A-2 2

Based on a pinch point of 11 7°C and an economizer approach of 41 7°C, power outputs and efficiencies were estimated at ISO conditions assuming that the steam turbine output is proportional to main steam flow for the 2-GE6FA and the single GE 9FA cases (which are similar to cases with the other combustion turbines in this group) In both cases, the output obtained is significantly less than a nominal 400 MW and the cycle efficiency is less than desired In the case of the 6FA configuration, the estimated LHV efficiency is about 47 4% which is less than the desired 50% In the 9FA case, it is just about 50% If the auxiliary loads are considered, this efficiency will further decrease In particular, it is noted that since the natural gas pressure at the site is only 18 bar, gas compressors will be necessary which will further reduce the efficiency and the net plant output

The 127 bar-132 bar pressure is about the highest pressure for which HRSGs have ever been built Most HRSG's are designed for not more than 112 bar-119 bar

It was concluded that re-use of the existing K-160 steam turbine generator is not a practical solution due to

- Low net capacity and efficiency,
- Problem with a contractor assuming responsibility for re-work and performance
- Undue complexity of interconnection, including new I&C loops,
- Unavailability of proven HRSG technology at 127 bar steam pressure,
- Unproven "G" technology record of performance at this time

b Evaluation of Combined Cycle Configuration

It is desirable that the selected combustion turbines be such that the resulting combined cycle would yield an output of 400 MW (±) and have greater than 50% efficiency A Western technology steam turbine is considered with a cycle in which all feedwater heating is accomplished in the HRSG All turbines operate at 3000 rpm and generate electricity at 50 Hz All technology is "E" status, and performance parameters are listed on Table A 2-2

Three alternatives were considered for initial screening These can be categorized by configuration as

(1) Two sets of 200 MW (±) CC
   a) Each set consisting of 2 x 1 configuration
   b) Each set consisting of single trains

(2) One set of 400 MW (±) CC with 2 x 1 configuration

(3) One set of 400 MW (±) CC with a single train

Experience dictates the use of the following guidelines, e g

a) The least cost and highest efficiency facility is the one comprised of the fewest equipment items since these minimize mechanical and thermal efficiency loses, as per Alternative (2) above However, loss of any component shuts down the entire system

b) For optimum system reliability, two combustion gas turbines and one steam turbine historically have the highest availability factor, in addition one set of combustion gas turbine generator spare parts will usually suffice for two machines' maintenance outages

This configuration, corresponding to Alternative (2) above, is schematically represented in Figure A 2-3

In order to determine the combined cycle output and heat rate at site conditions, and to account for the increased auxiliary power consumption due to a booster fuel gas compressor more detailed performance modeling has been undertaken In addition, general arrangements for the new combined cycle alternatives have been developed to ensure the new component arrangement will satisfy the specific site constraints

The detailed performance models at site conditions are represented in Table A 2-3a and -3b These performances were prepared using GT-Pro® software, adjusted to site conditions and corrected to actual auxiliary loads For international vendors who can supply equipment with an extensive operational background, the Table indicates that the stipulated net output and performance efficiency are best presented by equipment manufactured by (i) Siemens KWU

using their V94 2 machine and (ii) ABB using their GT13E2 machine The eventual recommended selection will be based upon comparative system costs

Table A 2-2

"E" TECHNOLOGY GT PERFORMANCE PARAMETERS AT ISO CONDITIONS
(Open Cycle)

Model	Output [MW]	HR (LHV) [kJ/kWh	Exh Flow [kg/sec]	Exh Temp [°C]
ABB-GT13E2	165 1	10074	533	524
GE (PG9171E)	123 4	10654	404 5	538
MHI-MW701	130 6	10623	445 9	513
Siemens KWU-V94 2	159 0	10433	514 5	514

c Final System Design Selection

The final system design has been based upon a combination of performance, capital economics and operating economics Full load performance parameters, within reasonable accuracy, are essentially equal between the Siemens KWU slection and the ABB selection

Process Flow Schematic Diagrams and energy and material balances have been prepared for a final system design using the Siemens KWU equipment This drawing is found in Section C 2 of this Feasibility Study, Dwg No M-021

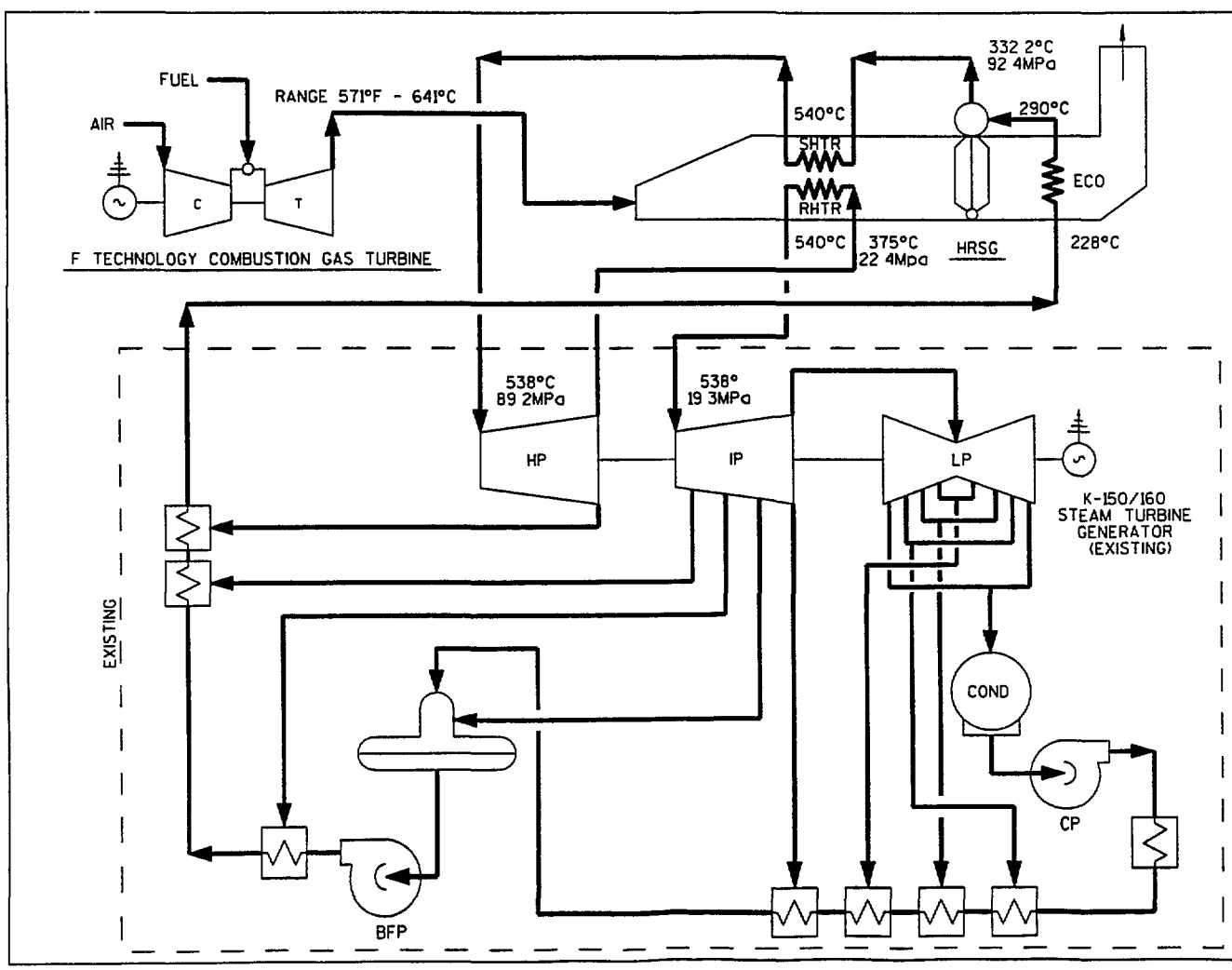
FUEL
AIR
RANGE 571°F - 641°C
C
T
F TECHNOLOGY COMBUSTION GAS TURBINE
540°C
SHTR
RHTR
540°C
375°C
22 4Mpa
HRSG
332 2°C
92 4MPa
290°C
ECO
228°C
538°C
89 2MPa
538°
19 3MPa
HP
IP
LP
K-150/160
STEAM TURBINE
GENERATOR
(EXISTING)
EXISTING
COND
CP
BFP

FIGURE A 2-1

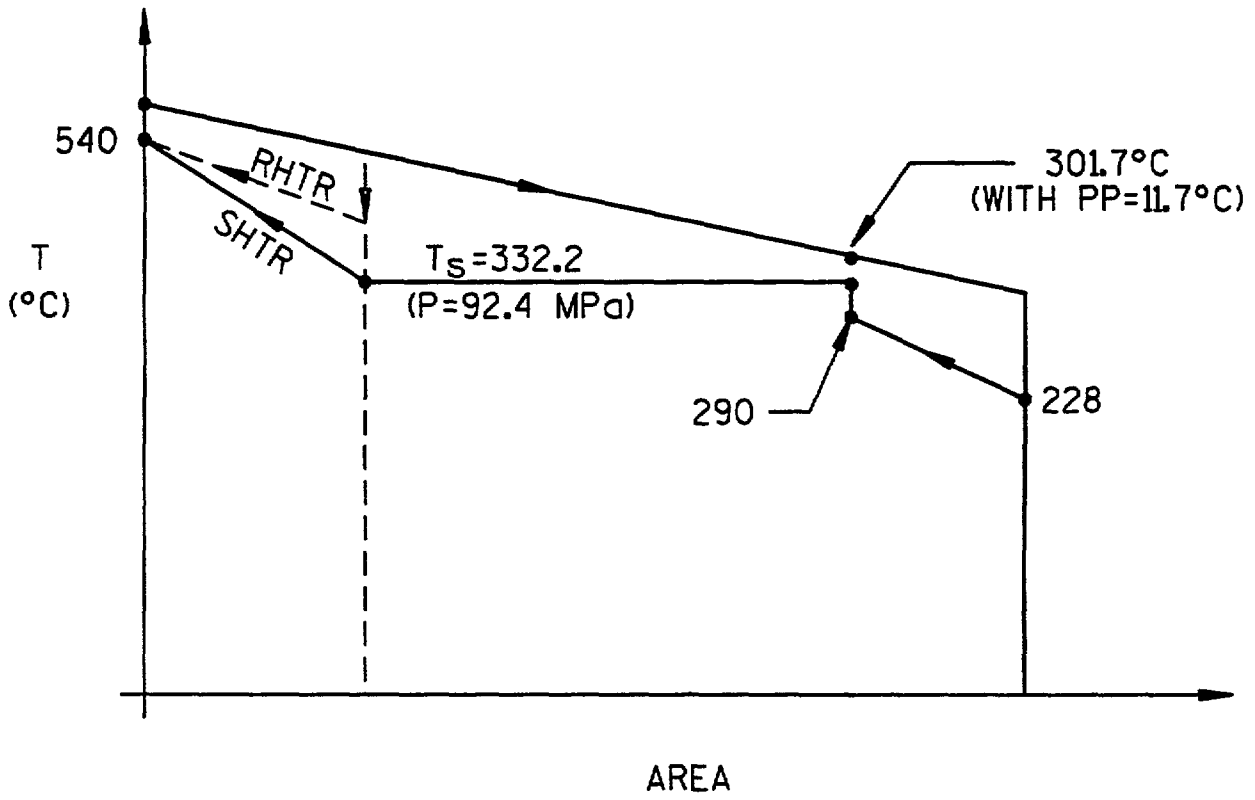

FIGURE A.2-2
(NTS)

5298M001.DGN

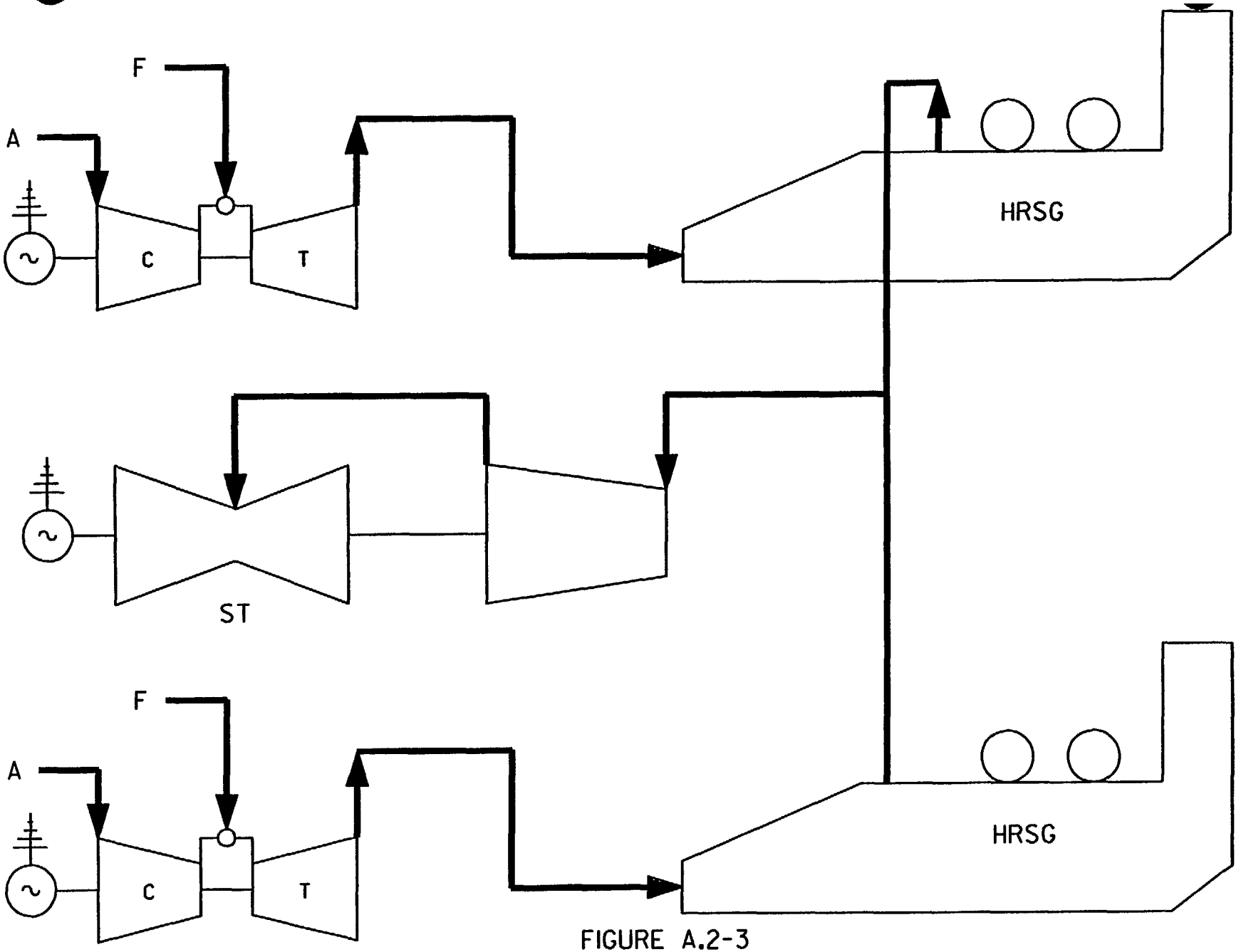

FIGURE A.2-3

5928MOOLDGN

Table A 2-3a

INITIAL COMPARISON OF PERFORMANCES

GT MODEL	GE PG9171E			MHI MW-701		SIEMENS KWU V94 2				ABB GT 13E2
CC CONFIG	2[1x1x1], 3P	1[2x2x1], 3P	2[1x1x1]SS, 3P	2[1x1x1], 2P	1[2x2x1], 2P	2[1x1x1] 3P	2[1x1x1] 2P	1[2x2x1], 3P	1[2x2x1] 2P	1[2x2x1], 2P
PARAMETER	NATURAL GAS FIRING									
Gross Output [kW]	314 046	314,610	315,184	334,618	335,201	396,352	393,920	396,467	394,033	396,877
Gross H R (LHV) [kJ/kWh]	7,070	7,057	7,044	7,361	7,348	7,073	7,117	7,072	7,115	7,046
Gross Eff (LHV) [%]	50 92	51 01	51 10	48 91	48 99	50 90	50 58	50 91	50 60	51 09
Total Aux Load [kW]	11,252	11,255	11,252	10,682	10,686	11,690	11,500	11,692	11 502	12,659
Net Output [kW]	302,794	303,355	303,932	323,936	324,516	384,662	382,420	384,775	382 531	384,218
NPHR (LHV) [kJ/kWh]	7,332	7,320	7,305	7,603	7,590	7,288	7,331	7,286	7,329	7 278
Net Eff (LHV) [%]	49 09	49 19	49 28	47 34	47 43	49 39	49 11	49 41	49 12	49 46
PARAMETER	No 2 FUEL OIL FIRING									
Gross Output [kW]	-	-	-	-	-	432,922	430,294	432 893	430,353	425 825
Gross H R (LHV) [kJ/kWh]	-	-	-	-	-	7,413	7,459	7,415	7,458	7,420
Gross Eff (LHV) [%]	-	-	-	-	-	48 56	48 27	48 55	48 27	48 52
Total Aux Load [kW]	-	-	-	-	-	10,692	10,490	10,694	10,493	10,242
Net Output [kW]	-	-	-	-	-	422,230	419 804	422,200	419,860	415,583
NPHR (LHV) [kJ/kWh]	-	-	-	-	-	7,601	7 646	7,602	7,645	7,603
Net Eff (LHV) [%]	-	-	-	-	-	47 36	47 09	47 35	47 10	47 35

(NPHR Net Plant Heat Rate)

Table A 2-3b

FINAL COMPARISON OF ALTERNATIVES

GT MODEL	SIEMENS KWU V94 2	ABB GT 13E2
CC CONFIG	1[2x2x1], 3P	1[2x2x1], 2P
PARAMETER	NATURAL GAS FIRING	
Gross Output [kW]	396,467	396 877
Gross H R (LHV) [kJ/kWh]	7 072	7 046
Gross Eff (LHV) [%]	50 91	51 09
Total Aux Load [kW]	11,692	12,659
Net Output [kW]	384,775	384,218
NPHR (LHV) [kJ/kWh]	7,286	7,278
Net Eff (LHV) [%]	49 41	49 46
PARAMETER	No 2 FUEL OIL FIRING	
Gross Output [kW]	432,893	425,825
Gross H R (LHV) [kJ/kWh]	7,415	7,420
Gross Eff (LHV) [%]	48 55	48 52
Total Aux Load [kW]	10,694	10,242
Net Output [kW]	422,200	415,583
NPHR (LHV) [kJ/kWh]	7,602	7,603
Net Eff (LHV) [%]	47 35	47 35

(NPHR Net Plant Heat Rate)

A 3a Capital Cost Estimate

The project capital cost estimate is the sum of the following

- EPC Turnkey Estimate
- Owner's Costs
- Physical Contingency
- Price Contingency
- Interest During Construction (IDC)

I EPC Turnkey Estimate

The EPC turnkey estimate as given in Table A 3-1 is based upon the following cost parameters

- Major equipment quoted by international vendors
- All foundations and structures rated for maximum seismic resistance
- Site demolition quoted lump sum by Armenian contractor
- Ninety (90%) of all materials imported and subject to Armenian duty
- Maximum utilization of Armenian craft labor
- Thirty (30) month construction schedule, terminating in the COD (Commercial Operation Date)

II Owner's Costs

Owner's costs are incurred from the date at which the Project Company is formed, through project development and financing and thence until construction is completed Owner's costs are normally paid from the proceeds of the Construction Loan

III Contingencies and Escalation

It is prudent to allow for physical and price contingencies as part of the capital cost estimate As well, an allowance for escalation should also be made unless firm and fixed negotiations with the selected EPC Contractor can result in a price inclusive of cost escalation for the duration of the project

The following factors will be applied to the EPC Cost Estimate

Physical Contingency	5%
Price Contingency	2 5% p a
Escalation	0
Duration	30 months (2 5 years)

IV Interest During Construction

Interest during construction (IDC) is a function of the form and nature of the construction loan A non-recourse loan, typically with a debt to equity ratio of 70-30 and a repayment duration of twelve years after commercial operation, will normally incur interest rates in the range of 12-18% Country-to-country loans, supported by the Sovereign Guarantee of the Republic of Armenia, would bear much lower interest rates with much longer repayment schedules

V Capital Cost Estimate Summary

	$1 000
EPC Contractor's Cost	223,054
Owner's Cost (from Table A 3-2)	14,440
Project Capital Cost escalated to completion, exclusive of IDC	$237,494

TABLE A 3-1

EPC TURNKEY CONTRACT COST ESTIMATE SUMMARY
USD 1998

CATEGORY		COST $1000
Demolition and Site Preparation		2,189
Civil, Structural and Architectural		8,058
Mechanical Equipment		113,213
Piping and Insulation		11,647
Other Mechanical		3,069
Instrumentation and Controls		5,250
Electrical Equipment		7,172
Other Electrical		1,812
	Total, Direct Costs	152,410
Indirects and General Expenses		45,920
	Total, Direct and Indirect Costs	198,330
Engineering Services		9,050
	Total Direct, Indirect and Services	207,380
Contingency at 8 0%		15,674
	Total EPC Turnkey Price	223,054
	Total Cost per kilowatt	$581

TABLE A 3-2

OWNER'S COSTS
USD 1998

Category	Cost $1000		
	Foreign	Domestic	Total
Inventory of Operational Spare Parts	4,240	--	4,240
Legal and Financial Consultant Fees	600	100	700
Working Capital/Initial Inventories	2,090	410	2,500
Permits and Licenses	25	75	100
Site Lease*	0	0	0
Owner's Insurance	760	0	760
Owner's Engineer	4,700	300	5,000
Owner's Staffing	900	200	1,100
Total Owner's Costs	13,315	1,085	14,440

* Site Lease is an annual operating cost

A 3b EPC Contract Cash Flow Schedule

The Disbursement Cash Flow Schedule is graphically presented in Figure A 3-1 It is shown on a cumulative basis through a 30 month construction schedule with a 10% retention declining balance until COD six months later

FIGURE A3 - 1

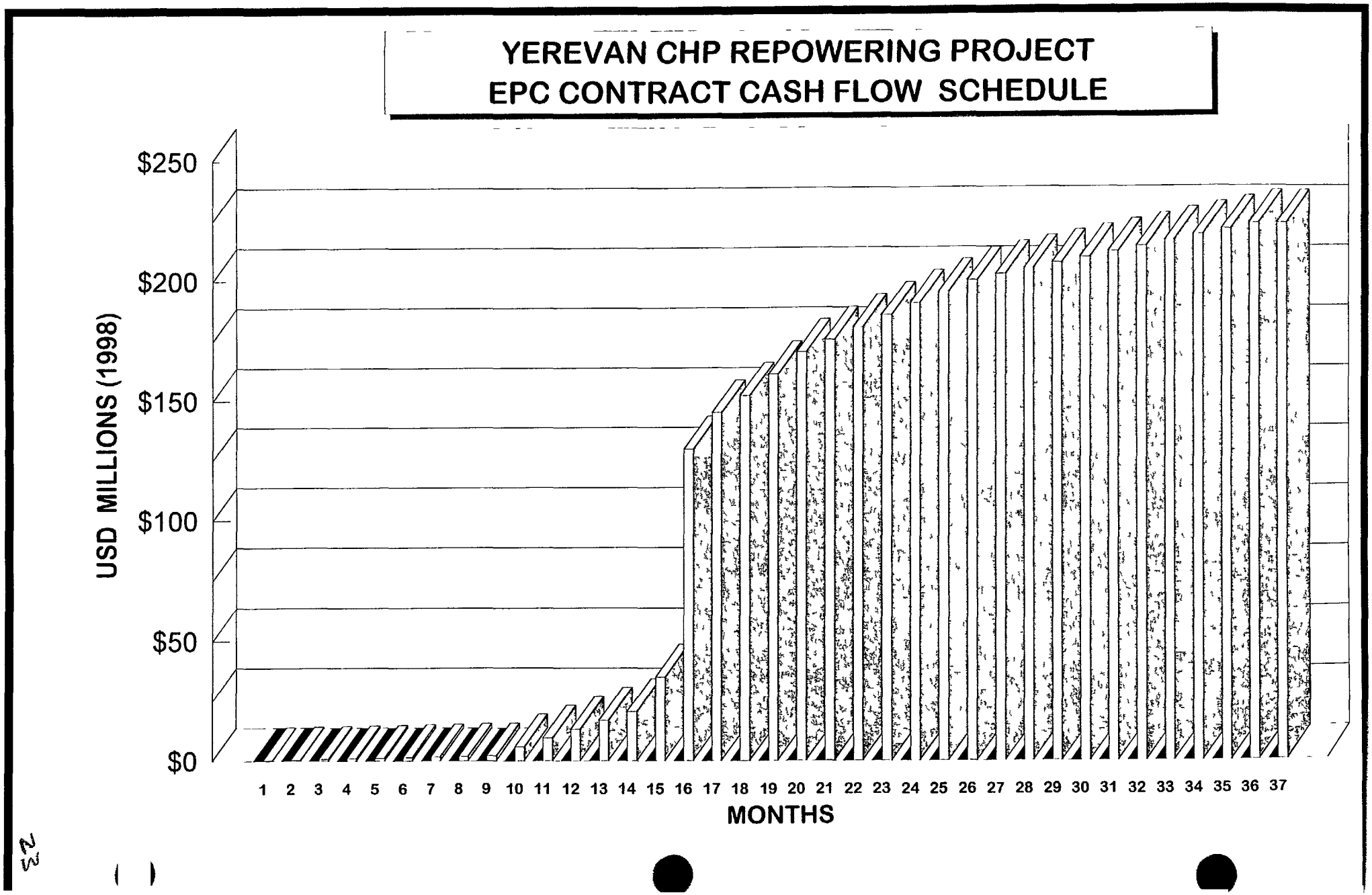

22

A 3c Annual Operating and Maintenance Cost Estimate

Estimated annual operation and maintenance costs and a breakout of fixed and variable components are presented in Tables A 3-3 and A 3-4 The estimate is based on typical manufacturers' recommendations, good utility practices for a combined cycle plant of the type, size and duty anticipated for the new Yerevan Power plant and the use of local skilled labor to the maximum extent possible All costs are expressed in USD, 1998, unescalated The following key assumptions form the bases for the total annual O&M estimate and the breakdown of fixed and variable components

1 The O&M estimate is based on baseload operation at an annual capacity factor of 85% and an average unit availability of 85%

2 A permanent staff comprised of local workers will be responsible for plant operation and routine maintenance Foreign subcontractors will be utilized to provide specialty maintenance services for major plant components including the gas turbine, HRSG, steam turbine and electric generator

3 The permanent plant staff is assumed to consist of 209 persons, of whom 9 are expatriates

4 Currently wage rates for skilled laborers and specialists in Armenia are average of about $1100 per year However, it is acknowledged that current wage rates have not kept up with inflation For the purpose of estimating permanent staffing costs it has been assumed that average annual domestic wages will rise to about $1500 (in constant 1998$) by the time the Yerevan plant is placed in commercial operation

5 A salary burden of 55% of permanent domestic staff direct labor cost is assumed to cover social costs

6 Specialized maintenance and overhauls of major plant components will be performed by foreign contractors at costs currently prevailing in western countries It is expected that local skilled labor would be used to the maximum extent possible Life cycle maintenance costs are annualized

7 Costs for maintenance materials and plant consumables will be at world price levels

8 Costs for maintenance materials and major equipment overhauls are divided between fixed and variable components

9 Insurance and property taxes are assumed at rate of 0 5% of initial plant cost

10 Labor costs for the first three years of operation will be high compared to the remaining plant lifetime because of the presence of expatriate staff employed as supervisor and as Owner's management staff The costs shown are estimated on an annualized basis from year three and thereafter

As can be seen from the Tables, total annual O&M is estimated to be $7 45M with fixed and variable components of 14 03 $/kW/yr and 0 87 $/MWh, respectively

TABLE A 3-3
YEREVAN COMBINED CYCLE PLANT
ANNUAL O&M BUDGET
USD 1998, UNESCALATED

	$1000/yr
Plant Staff	
Domestic Direct Labor, 200 persons @$660/yr, merged rate	132
Fringe Benefits	73
Expatriate Salaries and Expenses	830
Subtotal, Plant Staff	1,035
Maintenance Materials and Major Overhauls	
Consumables	423
Chemicals	550
Materials	214
Contract Services	530
Rental Equipment	85
Life Cycle Maintenance	2,734
Subtotal, Maintenance, Materials, etc	4,536
Site Overheads (excluding property lease fees and property taxes)	
Property and Casualty Insurance	1,678
Fees and Services	205
Subtotal, Site Overheads	1,883
TOTAL	7,454

TABLE A 3-4
YEREVAN COMBINED CYCLE PLANT
FIXED AND VARIABLE O&M COSTS
USD, 1998, UNESCALATED

O&M ITEM	TOTAL	FIXED COST	VARIABLE COST Non-Fuel Basis
Plant Staff	1035	1035	--
Maintenance Materials and Major Overhauls	4536	2428	2108
Site Overheads	1883	1883	--
Total	7454	5346	2108
Fixed O&M, $/KW/yr	--	$14 03	--
Variable O&M $/MWh	--	--	$0 87

A 4a Project Implementation

The project will be implemented in three successive phases Project Development, Project Construction and Commissioning, and Project Operation and Maintenance The primary activities associated with each of these phases are shown in the figure and summarized in the text that follows

Project Implementation Phases and Activities

	Business Development and Project finance	Project and Construction Management	Operations and Maintenance
Phase I Project Development	• **Obtains environmental permits** • **Negotiates contracts and agreements** • **Secures construction financing**	• Provides conceptual design • Provides construction cost estimates and performance data	• Provides O&M requirements and costs • conducts operability reviews
Phase II Construction and Commissioning	• Secures long-term financing	• **Manages design, engineering, and construction of the facility** • **Manages start up activities** • **Oversees acceptance testing**	• Provides personnel for start up • Trains operators
Phase III Operation and Maintenance	• Develops expansion projects	• Supports major overhauls and modernization programs	• **Manages Business** • **Operates facility** • **Manages maintenance activities**

Project Development - Project Development activities are all those that lead to financial closing These activities include

- Identifying key partners and structuring partnership agreements
- Acquiring property rights
- Arranging for fuel supply and transportation
- Negotiating power purchase agreement
- Applying for local permits
- Negotiating with various governmental agencies and local planning and zoning boards
- Preparing a rigorous technical definition of the project
- Estimating capital requirements and construction schedules

- Negotiating turnkey Engineering, Procurement and Construction (EPC) contracts
- Directing the analysis of financial performance under differing assumptions
- Arranging construction and permanent financing (financial closing)

Project Construction and commissioning - Project Construction and commissioning activities are split into two primary areas, project engineering and project control The goal of these activities is the commercial operation of the project

Project Engineering is responsible for all technical coordination and interface with contractors, consultants, engineers, vendors, site engineering, and other departments The primary objective of Project Engineering is to ensure that design requirements for the project are met relative to design/specification for construction as well as procurement of material, equipment, and services The following functions are performed by the project engineers and technical specialists

- Prepare project technical specifications
- Prepare technical input into project estimates and budget
- Evaluate contractors' quotations
- Review field problems/requests and approve recommended action
- Review and comment on contractor and vendor documents
- Prepare reports on progress, scheduling, estimates as needed
- Distribute documents/correspondence prepared by the consultants and contractors
- Review and approve drawings prepared by the EPC contractor
- Control submission to and response from the consultants, and others
- Monitor operations of the consultant and contractors
- Expedite flow of information between the consultants, vendors, contractors, site, and operations
- Control submission of and response to field change notices and other field requests
- Assure consultants' and contractors' compliance with the project schedule

Project Control is responsible for cost control, estimating, planning and scheduling, data processing, and management reporting systems The overall objective of this group is to provide an integrated control system which will furnish management with up-to-date project cost and schedule information so that they can effectively monitor the construction and start-up of the plant An outline of the group's involvement in these two key areas follows

Project control develops and maintains a cost control program which accurately monitors budget performance, establishes cash flow forecasts, and records and reports actual cost against estimated cost in a timely manner Functions include

- Establish a project budget based upon reviewed and approved estimates
- Review contractors' monthly *pro forma* invoices for accuracy and recommend action to the Project Manager
- Coordinate and assist in the preparation of cash flow forecasts for Project Management

- Review all extra work and/or scope change claims and advise Project Management of their validity from a cost standpoint
- Study construction cost trends and variances and report findings to Project Management
- Organize and prepare site historical cost data and reports
- Prepare any reports as may be required by the Project Manager

Project Control coordinates the various scheduling activities to meet target milestone dates and to ensure timely completion of the project Functions include

- Maintain current working knowledge of project Milestone Schedule and Contract Schedule commitments, advise Project Management of any major variances, and issues monthly status reports
- Establish and maintain the Master Target Schedule and coordinate the various scheduling activities in order to meet this schedule
- Assist contractors with the interpretation of the Master Target Schedule and in the preparation of their own working schedules
- Maintain owner's official site progress record and historical data
- Analyze excusable delays and advise Project Management of schedule impact
- Provide scheduling information and assistance of the Operations Group for proper planning of their mobilization and start-up activities
- Provide input to the Project Manager for periodic project progress reports as required

Project Operation and Site Maintenance - The Owner or his Contractor provide Operations and Maintenance services on the proposed project The Owner will employ a philosophy which fosters high expectations for an ongoing, integrated O&M program that reflects total corporate commitment to quality, reliability, and integrity Direct operation of facilities enables the Owner to use its operating experience and extensive resource base to analyze, access and manage business risks It also allows the Owner to effectively resolve any operating or technological difficulties, to efficiently and expeditiously address regulatory issues, and to work toward balancing near-term profit objectives with peak system performance, environmental compliance, and asset preservation

O&M managers work closely with business developers, financial experts, engineers, construction supervisors, and others as a project evolves so that O&M becomes an integral part of full project development, including design, construction, and commissioning Operation and Maintenance activities will include

- Staffing the plant with qualified personnel for three-shift operation seven days a week
- Operating and providing maintenance services on a day-to-day basis
- Managing fuel purchases, fuel supply, and fuel delivery contracts
- Managing fuel storage capacity
- Manage the spare parts inventory and purchase of spare parts
- Maintain operating logs for all major pieces of equipment
- Carry out performance calculations for major pieces of equipment

- Evaluate operating data collected to determine problem areas
- Provide operating and maintenance reports to the plant manager
- Negotiate local contracts, as required
- Meter the electricity sold for billing purposes,
- Conduct all business activities relating to accounting, taxes, personnel administration, etc , and
- Maintain worker's quarters

A 4 b Construction Staffing Plan

1 ORGANIZATION

The execution plan proposed for this project is based on one home office center of activity for contract execution during the course of engineering, manufacture, and construction of the project A single project management team directing, managing, and coordinating the consortium is essential to the successful execution of a large turnkey project Organization charts are structured to support this philosophy

- During the construction phase of the project, offices at the project site will be set up for use by all contractors This office will perform field engineering, procurement and project control functions as the headquarters of construction activities

- A consortium project manager will be appointed, and the project management team (PMT) will be nominated The project management team will act as the consortium technical leader and will interface with other consortium members Each consortium member has a project team which will be controlled by the project management team

The project management team will be supported by a turnkey Contractor Company to do the following

- Coordination, engineering, and design work

  - Overall plant engineering,

  - Supply of basic specific data, including civil, mechanical, and electrical design data,

  - Definition of common equipment,

  - Common numbering of equipment,

  - Common form and identification of drawings and documents,

  - Building up of basic schedule for drawings, documents, and mutual information

  - Checking for conformity between technical documents issued by the parties

- Establish construction labor staffing requirements
- Coordination of the plant erection, commissioning, and maintenance
- Planning and schedule for the consortium
- General engineering studies, definition of main characteristics of the plant, general lay-out drawings Each party, however, shall perform all studies, design and lay-out of the equipment belonging to its scope of the works within the basic design performance determined by the project management team
- Overall progress control and report
- Representation of the consortium in front of any other relevant organization
- Informing the consortium members of all important events and to invite them to participate in all negotiations involving their mutual interests
- Supplying the consortium members with a copy of correspondence which effects the mutual interests of consortium members
- General coordination of the Contract implementation including building-up of the detailed construction schedule and of monthly progress reports
- Coordination of instructions from any other authority
- Administrative tasks for the consortium's common interest
- Conveying and presiding at all consortium meetings and any other service

2 RESPONSIBILITIES OF KEY PERSONNEL

Outlined below are the responsibilities of consortium project manager, engineering manager, procurement manager and quality assurance manager

a) Consortium Project Manager

The consortium project manager, as the representative of the consortium, is responsible for any and all aspects of the project that include but are not limited to the following

- Maintains contact with and acts together with any representatives

- Establishes overall policy for execution of the work

- Maintains a working knowledge of the consortium's contractual obligations and ensures that all parties work within these requirements

- Reviews reports covering costs, budgets, forecasts, planning, and scheduling in order to maintain control of the project

- Prepares and presents a report to the project company on a scheduled basis which defines the progress of the Project

- Travels, as required in order to fulfill the requirements of the project including relocation to the Armenia project jobsite for the construction phase of the project

- Delegates duties and responsibilities to other members of the project management team as necessary

- Consults with the consortium executive committee, as necessary, to resolve any problem requiring higher management involvement

b) Engineering Manager

- The engineering manager is responsible for all functions relating to project engineering and reports to the consortium project manager The responsibility of the engineering management will generally cover the following areas

  - Detailed engineering
  - Basic design
  - Detailed design and drafting

- It is the responsibility of the engineering manager to supervise the preparation of

  - Basic engineering design data
  - Project specifications
  - Standard drawings and details
  - Standard requisition forms
  - Design methods and procedures

- The engineering manager will monitor the engineering and design efforts of all participating engineering offices

- Ensures that the schedule of engineering work is maintained and is compatible with procurement and construction activities and contractual obligations

- Prepares periodic reports, as required, for the project or as directed by the consortium project manager

c) Procurement Manager

The duties and responsibilities of the procurement manager will include the following

- Directing and coordinating all procurement and materials control personnel assigned to the project

- Recommending to the consortium project manager establishment of priorities where needed between conflicting requirements in the materials area

- Ensuring that information from the estimate and all design offices is properly input to the material control system on a regular basis

- Ensuring that all requisitioned materials versus budgeted quantities are received and ensuring that data on developing trend is distributed

- Ensuring continuous control of material from design through construction

d) Quality Assurance Engineer

Quality assurance will be under the guidance of the Quality Assurance Engineer who will report directly to the consortium project manager A highly qualified inspection group will be under the direction of the quality assurance engineer, by whom the full range of required inspection will be made

3 CONTRACT AND SUBCONTRACT ADMINISTRATION

Overall procurement direction will be controlled from the PMT

Expediting, inspection, and traffic responsibility will be allocated on the nearest geographical basis The project will be executed using a dedicated work force of qualified and experienced personnel in each location The proposed consortium

members are accustomed to handling delivery of equipment and materials to the project of this magnitude and complexity

The consortium will purchase materials for this project from sources of supply in various countries on a preferential basis whenever quality, reliability, and price are competitive For items financed from ECA's through the Private Sector Energy Development Fund, IBRD rules for international competitive bidding will be used

4 PLANT CONSTRUCTION

a) Construction Management and Administrative Plan

Reporting to the consortium project manager, the construction manager is responsible for the overall management of the construction activities The construction general manager will be appointed early in the engineering phase and expected to familiarize himself in the project management team before being relocated to the field construction office His primary duties and responsibilities include the following

- Review project data and coordinate with staff services to develop detailed construction plans and schedules
- Develop equipment and tool requirements and schedules in conjunction with the engineering manager
- Authorize start-up of field activities and approve the selection of craft foremen
- Administer labor relations in accordance with corporate policy and directive of the consortium project manager
- Conduct periodic progress review meetings to coordinate the work of various crafts and to issue the availability of equipment, materials, and manpower
- Coordinate with subcontractor representative to ensure that construction plans are properly integrated
- Review and approve construction cost and progress reports

Another key position in the organization is the construction coordinator The construction coordinator's primary responsibilities include the following

- Participation in the development of the construction schedule

- Review of all project specifications

- Participation in all estimating activities relative to direct and indirect construction labor and materials and the establishment of related budgets

- Ensure the review of all heavy erection lifts

- Review the project tool and equipment list

- Initiate the construction staging plan, including all office facilities, storage yards, warehousing, labor change facilities, temporary roads, drainage, etc

- Review construction management staffing and make recommendations to the project manager

- Indoctrinate the construction general manager and his staff on the project requirements

- Review and approve all subcontracts for construction material and/or labor prior to award

- Advise the project manager of impending schedule slippage or budget overruns and initiate corrective action

- Coordinate with the client's field representative on matters pertaining to construction progress, cost or quality in conjunction with the project manager

- Coordinate completion and testing with the project startup schedule

- Provide for adequate safeguards over equipment, tools and materials Arrange for release of equipment and disposal of surplus materials

b) Construction Labor

Armenian craftsmen and labor will be employed as much as possible in all phases of construction Skilled expatriate labor will comprise the remainder

Local labor will be provided with the following training before commencement of works by administration staff or supervisors

- Security instruction

- Erection procedure instruction
- Welder training and qualification

c) Temporary Construction Infrastructure

The initial site work will consist of establishing the necessary facilities to start the main construction activities The temporary facilities will include laydown areas, offices for construction contractors, fencing and security system, equipment maintenance area, and other facilities To support these facilities, the infrastructure utilities will be established The utilities will include the water supply (for water to be used in construction as well as portable water), diesel generators with construction power grid work, and to supply power to the craft shops, sanitary facilities with septic system, telephone lines, other communication links, etc

d) Plant Commissioning

Plant commissioning consists of all tests and checkouts required to demonstrate plant reliability and capability These activities will take place upon initial synchronization of each unit and will last for a period of three months for each unit Upon completion of commissioning, the units will be certified for commercial operation and provisionally accepted by the power company

During the commissioning period, the units will be operated at variable power levels in order to complete all calibrations and final checkouts During this period, a reliability run will also be conducted on each unit Additionally, each unit will also undergo an inspection of the turbine bearings

Plant guarantee tests will be conducted following commercial operation prior to the final acceptance of the units

A 5 - Procurement Plan

		Page
Invitation for Prequalification		A-34
Instructions to Applicants		A-36
1	General	A-36
2	Qualification Criteria	A-36
3	Supporting Data	A-39
4	Joint Venture or Consortium	A-40
5	Conflict of Interest	A-40
6	Updating Prequalification Information	A-41
7	Bid Processing	A-41

Attachment A Application Forms
Attachment B Evaluation Criteria (Pass/Fail)

Invitation for Prequalification

1 The (later) Joint Stock Company of the Republic of Armenia, through its Consultant, Burns and Roe Enterprises, Inc , intends to prequalify Contractors for the following works under this project

1 The Contract shall consist of designing, furnishing, constructing, installing, checking out of systems, starting up and testing of a complete operable combined cycle power plant to be built at the Yerevan CHP Plant site

2 The Project will consist of a nominal 400 MW gas combined cycle power plant as described in the Bid Package The main fuel is natural gas with diesel oil back up fuel The plant will be located within the Yerevan CHP Power Plant complex The steam exhaust from the steam turbine will be condensed in a circulating water cooled condenser The diesel oil will be stored in existing fuel oil storage tanks which will be refurbished The existing water treatment plant will process well water suitable for boiler makeup and gas turbine water injection The new step-up transformers will be connected to the existing 110 kV substation within the power plant complex The plant will be complete with all the normal support facilities including control room, offices, conference room, men's facilities, male and female locker rooms, toilets and showers, chemical laboratory, maintenance shop and warehouse

2 It is expected that Invitation to Bid will be issued (later)

3 Prequalification is open to firms and voluntarily formed joint ventures from eligible source countries as defined in the Loan Agreement between the Government of Armenia and the [later]

4 Eligible applicants may obtain the prequalification documents by calling, writing, or faxing

5 (later)

6 The request must clearly state "Request for Prequalification Documents" for the Yerevan Gas Combined Cycle Power Plant Project The documents are available for a non refundable fee of 250 USD for a set by transferring this amount to (later) at International Bank of the Armenian Republic Burns and Roe Enterprises, Inc , will promptly dispatch the documents by registered air mail, but under no circumstances will it be held responsible for late delivery or loss of the documents so mailed

7 Submissions of Applications for Prequalification must be received in sealed envelopes, which must be either delivered by hand or by registered mail, to the address mentioned in item 5, and be clearly marked "Application to Prequalify for the Yerevan Gas Combined Cycle Power Plant Project" One copy in the English language shall also be provided to

Mr Carl Morrow
Burns and Roe Enterprises, Inc
800 Kinderkamack Road
Oradell, NJ, USA 07649

8 Joint-Stock Company (later) reserves the right to accept or reject late applications

9 Only firms and joint ventures prequalified under this procedure will be invited to bid Applicants will be advised, in due course, of the results of their applications

Instructions to Applicants

Name of the Project	Yerevan Gas Combined Cycle Power Plant
Name of the Employer	(later)
Name of the Borrower	(later)

1 General

1 1 Prequalification is open to firms and voluntarily formed joint ventures from eligible source countries as defined in the Loan Agreement Domestic contractors may apply for qualification independently or in joint venture with foreign contractors

1 2 General information on the climate, hydrology, topography, access to site, transportation, plant layout, expected construction period, facilities, and services provided by the Employer, and details of the works under this Contract are given in the Engineering, Procurement and Construction Bid Package The Contract will be a "Turnkey Contract" The Turnkey Contractor will be obligated to guarantee the time of completion and the performance of the plant

2 Qualification Criteria

2 1 Prequalification will be based on meeting all the minimum pass/fail criteria regarding the Applicant's general and particular experience, personnel and equipment capabilities, and financial position, as demonstrated by the Applicant's responses in the forms attached to the Letter of Application (specific requirements for joint ventures are given under paras, 4 1 and 4 2 below) The Employer reserves the right to waive minor deviations, if they do not materially affect the capability of an applicant to perform the contract Subcontractors' experience and resources shall not be taken into account in determining the applicant's compliance with the qualifying criteria

2 2 Applicant shall be an internationally reputable Contractor, Joint Venture or a reputable manufacturer of gas turbines who meets the qualification requirements stipulated hereunder Manufacturers of gas turbine means any firm, partnership or company which has developed, designed and manufactured gas turbines of its own technology and regularly owns, operates and maintains a factory or establishment that produces the equipment, materials and supplies required for the Project

2 3 The Applicant's total value of engineering, procurement and construction contracts associated with coal fired circulating fluidized bed power plants over the last five years must be more than 500 million USD

2 4 Any Joint Venture may participate in a Tender, provided that they have sufficient experience and personnel capable of fulfilling the proposed function and role required for the Works and shall exclusively associate with the qualified manufacturer of gas turbine The manufacturers of gas turbine in association with the trading firm are required to be qualified in accordance with the procedures specified hereunder The trading firm shall provide the commitment letter from the manufacturers of gas turbines for such exclusive agreement

2 5 Applicant and/or the gas turbine manufacturer exclusively associated with trading firm or Joint Venture must have completed combined cycle power block(s) on a turnkey basis having generating output more than 400 MW at generator terminal outside its domicile country

2 6 Any firm applying more than once individually and/or in other consortium or other formations will be disqualified

2 7 Each Applicant shall identify the manufacturer from whom they intend to procure the gas turbine, steam turbine, heat recovery steam generator, electric generator and power transformer The manufacturer for the above major equipment shall have at least five (5) years experience in the design and manufacture of similar size equipment to be supplied for the Project The manufacturer for the circulating fluidized bed boiler shall have at least three (3) years experience in the design of this equipment and shall have supplied circulating fluidized bed boilers for large international projects of similar size

2 8 Gas turbines offered by the Applicant shall satisfy the requirements described below

The Applicant shall include in his Application Form the commercial operation record of the referenced plant(s) duly certified by the owner of the plant and the proposed gas turbine shall be of a similar model, of which at least one machine has been put into commercial operation and this machine has at least 7500 actual full-load operating hours of successful commercial operation at the Prequalification closing date The Applicant shall provide written confirmation, by the Owners, of satisfactory operation of the gas turbines

"The similar model" shall mean the one which satisfies all of the following

(a) As for turbine generator same configuration

(b) As for combustor same type, same numbers of stages and rotating speed

(c) The turbine hot gas path metal temperature shall not be greater than that of units in operation using the same blade cooling system

2 9 Applicant shall submit the following document

- Experience and performance on similar or larger sized projects
- Supporting letter(s) from the plant owner(s) regarding the hours of operation and operating history
- Supporting letter(s) from the plant owner(s) which confirms compliance with the requirements of 2 5 above
- Experience and performance of the Manufacturers to be engaged for supplying the major equipment such as combustion turbine, heat recovery steam generator, steam turbine, electric generator and power transformer
- Commitment letter from gas turbine manufacturer in case of a tenderer other than a gas turbine manufacturer as required in 2 4 above
- Audited annual report for the last five years

2 10 The Employer reserves the right to cancel the pre-qualification process and to reject any application without informing the applicant of the reason why the pre-qualification process has been canceled or the Tenderer has been rejected Only firms pre-qualified under this procedure shall be invited to bid

2 11 The Applicant must have suitably qualified personnel to fill the following positions The Applicant will supply information on a prime candidate and on alternate for each of the following positions, both of whom should meet the experience requirements specified below

	Total Experience (Years)	In similar Works (Years)	As Manager of Similar Works (Years)
Project Manager	25	20	10
Project Engineering Manager	25	20	10
Site Manager	25	20	10
Manager, Procurement	25	20	10
Lead Mechanical Engineer	20	15	10
Lead Electrical Engineer	20	15	10
Lead I&C Engineer	20	15	10
Lead Civil/Structural Engineer	20	15	10

3 Supporting Data

The Applicant shall annex to the Application forms the following supporting documents

(a) A photocopy of the business registration certificate by a competent National Authority stating the full name of the Applicant, the person or persons or entity authorized to represent the Applicant, and the date and place of registration as a Contractor (If the Applicant is a company or a joint venture company, such certificate must state the scope, the paid-up capital, the duration and the date of incorporation of the company and the names of all directors of the board Further, in case of a joint company, the share holding structure of the company shall be stated),

(b) Certificates by public accountants to the Applicant's financial statements, and

(c) Photocopies of completion certificates issued by the relevant owners or engineers of the projects as listed in the particular experience record (Application Form (3)) to indicate that such projects were satisfactorily completed by the Applicant including each member company of a joint venture and each such contractor

4. Joint Venture or Consortium

4 1 Joint ventures or consortiums must comply with the following requirements

(a) As minimum qualification requirements

i The lead partner shall meet 100 percent of all the qualifying criteria given in paragraphs 2 3 and 2 5 above

ii The other partners shall also have experience of not less than 50 percent of all the qualifying criteria given in paragraph above

(b) The formation of a joint venture after prequalification, and any change in a prequalified joint venture, will be subject to the written approval of the Employer prior to the deadline for submission of bids Such approval may be denied if (i) partners withdraw from a joint venture and the remaining partners do not meet the qualifying requirements, (ii) the new partners to a joint venture are not qualified, individually or as another joint venture, or (iii) in the opinion of the Employer, a substantial reduction in competition may result

(c) Any bid shall be signed so as to legally bind all partners, jointly and severally, and any bid shall be submitted with a copy of the joint venture agreement providing the joint and several liability with respect to the Contract

4 2 The prequalification of a joint venture does not necessarily prequalify any of its partners individually or as a partner in any other joint venture or association In case of dissolution of a joint venture, each one of the constituent firms may prequalify if they meet all the prequalification requirements, subject to the written approval of the Employer

5 Conflict of Interest

5 1 The Applicant (including all members of a joint venture) must not be affiliated (i e , subsidiary, parent or partner), nor have been affiliated (i e , subsidiary, parent or partner) in the past, with the consultant or any other entity that has prepared the design, specifications, and other prequalification and bidding documents for the Yerevan Gas Combined Cycle Power Project, or that was proposed as Engineer for the Contract, over the last five years Any such association may result in the disqualification of the Applicant

6 Updating Prequalification Information

6 1 Bidders shall be required to update the financial information used for prequalification at the time of submitting their bids, to confirm their continued compliance with the qualification criteria and verification of the information provided A bid shall be rejected if the Applicant's qualification thresholds are no longer met at the time of bidding

7 Bid Processing

7 1 Only firms and joint ventures or consortiums that have been prequalified under this procedure will be invited to bid A qualified firm or a member of a qualified joint venture may participate in only one bid for the contract If a firm submits more than one bid, singly or in joint venture, all bids including that party will be rejected This rule will not apply in respect of bids which include specialist subcontractors who are used by more than one bidder

7 2 Bidders will be required to provide bid security in the form of a bond, banker's guarantee, or other security acceptable to the Employer for an amount equal to $30/kW, the successful bidder will also be required to provide performance security Examples of acceptable forms will be supplied with the bidding documents Bid security shall be from a reputable bank located in any Eligible Country, and bank guarantee for the performance security must be endorsed by a Bank in the "Republic of Armenia"

Bid security will be returned to each unsuccessful Bidder 90 days after award to the successful Bidder

7 3 The Employer reserves the right to

(a) amend the scope and value of any contract to be bid, in which event the contract will only be bid among those prequalified bidders who meet the requirements of the contract as amended,

(b) reject or accept any application, and

(c) cancel the prequalification process and reject all applications

The Employer shall neither be liable for any such actions nor be under any obligation to inform the Applicant of the grounds for them

7 4 Applicants will be advised in writing by facsimile or telex, within 90 days of the date for Submission of Applications (para 2 1 above), of the result of their application, and the names of the prequalified applicants, without assigning any reason for the Employer's decision No negotiations will be permitted after successful award

LIST OF FORMS

Letter of Application

Application Form (1)	General Information
Application Form (2)	General Experience Record
Application Form (2A)	Joint Venture or Consortium Summary
Application Form (3)	Particular Experience Record
Application Form (3A)	Details of Contracts of Similar Nature and Complexity
Application Form (4)	Summary Sheet Current Contract Commitments/Works in Progress
Application Form (5)	Combined Cycle Plant Data
Application Form (6)	Financial Capability
Application Form (7)	Litigation History

Letter of Application

[letterhead paper of the Applicant, or partner responsible for a joint venture, including full postal address, telephone no , fax no , telex no , and cable address]

Date .

To _____(name of Employer)_____

Sirs,

1 Being duly authorized to represent and act on behalf of

(hereinafter "the Applicant"), and having reviewed and fully understood all the prequalification information provided, the undersigned hereby apply to be prequalified by yourselves as bidder for the following contract under __(name of Project)____ _____

Contract number	Contract Name
No	(Insert name of Contract)

2 Attached to this letter are copies of original documents defining [1]

(a) the Applicant's legal status,

(b) the principal place of business, and

(c) the place of registration and the nationality of the Owners (for applicants who are partnerships or individually-owned firms)

3 Your Agency and its authorized representatives are hereby authorized to conduct any inquiries or investigations to verify the statements, documents, and information submitted in connection with this application, and to seek clarification from our bankers and clients regarding any financial and technical aspects This Letter of Application will also serve as authorization to any individual or authorized representative of any institution referred to in the supporting information, to provide such information deemed necessary and

[1] *For applications by joint ventures all the information requested in the prequalification documents is to be provided for the joint venture if it already exists and for each party to the joint venture separately The lead partner should be clearly identified Each partner in the joint venture shall sign the letter*

requested by yourselves to verify statements and information provided in this application, or with regard to the resources, experience, and competence of the Applicant

4 Your Agency and its authorized representatives may contact the following persons for further information [12]

General and managerial inquiries	
Contact 1	Telephone 1
Contact 2	Telephone 2

Personnel inquiries	
Contact 1	Telephone 1
Contact 2	Telephone 2

Technical inquiries	
Contact 1	Telephone 1
Contact 2	Telephone 2

Financial inquiries	
Contact 1	Telephone 1
Contact 2	Telephone 2

5 This application is made in the full understanding that

(a) bids by prequalified applicants will be subject to verification of all information submitted for prequalification at the time of bidding,

(b) your Agency reserves the right to

- amend the scope and value of any contracts bid under this project, in such event, bids will only be called from prequalified bidders who meet the revised requirements, and

- reject or accept any application, cancel the prequalification process, and reject all applications, and

(c) your Agency shall not be liable for any such actions and shall be under no obligation to inform the Applicant of the grounds for them

6 Appended to this application, we give details of the participation of each party, including capital contribution and profit/loss agreements, to the joint venture or association We also specify the financial commitment in terms of the percentage of the value of the contract, and the responsibilities for execution of the contract

[12] *Applications by joint venture should provide on a separate sheet equivalent information for each party to the application*

7 We confirm that in the event that we bid, that bid as well as any resulting contract will be

(a) signed so as to legally bind all partners, jointly and severally, and

(b) submitted with a joint venture agreement providing the joint and several liability of all partners in the event the contract is awarded to us

8 The undersigned declare that the statements made and the information provided in the duly completed application are complete, true, and correct in every detail

Signed	Signed
Name	Name
For and on behalf of (name of Applicant or lead partner of a joint venture)	For and on behalf of (name of partner)

Signed	Signed
Name	Name
For and on behalf of (name of partner)	For and on behalf of (name of partner)

Signed	Signed
Name	Name
For and on behalf of (name of partner)	For and on behalf of (name of partner)

Attachment A

Application Forms

General Information

All individual firms and each partner of a joint venture applying for prequalification are requested to complete the information in this form Nationality information to be provided for all owners or applicants who are partnerships or individually-owned firms

Where the Applicant proposes to use named subcontractors for critical components of the works, or for work contents in excess of 25 percent of the value of the whole works, the following information should also be supplied for the specialist subcontractor(s)

1	Name of firm	
2	Head office address	
3	Telephone	Contract
4	Fax	Telex
5	Place of incorporation / registration	Year of incorporation / registration

Nationality of owners/1		
	Name	Nationality
1		
2		
3		
4		
5		

1 *To be completed by all owners of partnerships or individually-owned firms*

APPLICATION FORM (2)

General Experience Record

Name of Applicant or partner of a joint venture

All individual firms and all partners of a venture are requested to complete the information in this form The information supplied should be the annual turnover of the Applicant (or each member of a joint venture), in terms of the amounts billed to clients for each year for work in progress or completed, converted to U S dollars at the rate of exchange at the end of the period reported

Use a separate sheet for each partner of a joint venture

Annual turnover data (construction only)		
Year	Turnover	US$ equivalent
1		
2		
3		
4		
5		

APPLICATION FORM (2A)

Joint Venture or Consortium Summary

Names of all partners of a joint venture or consortium
1 Lead partner
2 Partner
3 Partner
4 Partner
5 Partner

Total value of annual construction turnover, in terms of work billed to clients, in US$ equivalent, covered at the rate of exchange at the end of the period reported

Annual turnover data (construction only, US$ equivalent)						
Partner	Form 2 page no	Year 1	Year 2	Year 3	Year 4	Year 5
1 Lead Partner						
2 Partner						
3 Partner						
4 Partner						
5 Partner						
6 Partner						
	Totals					

APPLICATION FORM (3)

Particular Experience Record

Page ___ of ____ Pages

Name of Applicant

To prequalify, the Applicant shall be required to pass the specified requirements applicable to this form, as set out in the "Prequalification Instructions to Applicants"

On a separate page, using the format of Form (3A), each applicant or partner of a joint venture is requested to list all contracts of a value equivalent to 250 Million USD, of a similar nature and complexity to the contract for which the Applicant wishes to qualify, undertaken during the last 5 years The value should be based on the currencies of the contracts converted into US dollars, at the date of substantial completion or for current contracts at the time of award The information is to be summarized using Form (3A), for each contract completed or under execution by the Applicant or bv each partner of a joint venture

Where the Applicant proposes to use named subcontractors for critical components of the works, or for work contents in excess of 25 percent of the value of the whole works, the information in the following forms should also be supplied for each specialist subcontractor

APPLICATION FORM (3A)

Details of Contracts of Similar Nature and Complexity

Name of Applicant or partner of a joint venture

Use a separate sheet for each contract

1	Number of contract
	Name of contract
	Country
2	Name of employer
3	Employer address
4	Nature of works and special features relevant to the contract for which the Applicant wishes to prequalify
5	Contract role (check one) ☐ Sole contractor ☐ Subcontractor ☐ Partner in a joint venture
6	Value of the total contract (in specified currencies at completion, or at date of award for current contracts) Currency Currency Currency
7	Equivalent value US$
8	Date of award
9	Date of completion
10	Contract duration (years and months) _____years _____months
11	Specified requirements /1

1 *Insert any specific criteria required for particular operations, such as annual volume of earthmoving, underground excavation, or placing concrete*

APPLICATION FORM (4) Page ___ of ____ Pages

Summary Sheet: Current Contract Commitments / Works in Progress

Name of Applicant or partner of a joint venture

Applicants and each partner to an application should provide information on their current commitments on all contracts that have been awarded, or for which a letter of intent or acceptance has been received, or for contracts approaching completion, but for which an unqualified, full completion certificate has yet to be issued

Name of contract	Value of outstanding work (current US$ equivalent)	Estimated completion date
1		
2		
3		
4		
5		
6		

APPLICATION FORM (5)

COMBINED CYCLE PLANT DATA

Page ___ of ___ Pages

Name of Applicant

The Applicant shall provide adequate information to demonstrate clearly that it meets the requirements listed in 3 8 of Instruction to Applicants A separate Form (5) shall be prepared for each combined cycle plant

COMBINED CYCLE PLANT		DATA
Name of Employer		
Location of Installation		
Country of Installation		
Plant Configuration		
Plant Capacity		
Date of Commercial Operation		
Gas Turbine Model Number/Supplier		
Country of Manufacture		
Fuel		
Gas Turbine Capacity at ISO Condition	**MW**	
Gas Turbine Capacity at Site Conditions	**MW**	
Gas Turbine Rotating Speed	**RPM**	
Generator Supplier		
Country of Manufacture		
Generating Rating-	**MVA**	
Generator Speed-	**RPM**	
Steam Turbine Supplier		
Country of Supplier		
Country of Manufacturer		
Steam Turbine Capacity at Design Back Pressure	**MW**	
Steam Turbine Configuration/Type		
HP Turbine Inlet Steam Pressure	**BAR**	
HP Turbine Inlet Steam Temperature	**°C**	

APPLICATION FORM (5)

COMBINED CYCLE PLANT DATA

Page ___ of ___ Pages

Name of Applicant

COMBINED CYCLE PLANT		DATA
HP Turbine Rotating Speed	**RPM**	
HRSG Supplier		
Country of Manufacture		
HRSG HP Superheat Steam Outlet Pressure	**Bar**	
HRSG HP Superheat Steam Outlet Temperature	**°C**	
HRSG Main Steam Flow	**Kg/sec**	
Plant Reliability		
Available Hours	**Per Annum**	
Operating Hours	**Per Annum**	
Scheduled Maintenance Hours	**Per Annum**	
Forced Outage Hours	**Per Annum**	

Financial Capability

Name of Applicant or partner of a joint venture

Applicants, including each partner of a joint venture, should provide financial information to demonstrate that they meet the requirements stated in the Instructions to Applicants Each applicant or partner of a joint venture must fill in this form If necessary, use separate sheets to provide complete banker information A copy of the audited balance sheets should be attached

Banker	Name of banker	
	Address of banker	
	Telephone	Contact name and title
	Fax	Telex

Summarize actual assets and liabilities in U S dollar equivalent (at the rates of exchange current at the end of each year) for the previous five years Based upon known commitments, summarize projected assets and liabilities in U S dollar equivalent for the next two years

Financial information in US$ equivalent	Actual previous five years					Projected next two years	
	1	2	3	4	5	6	7
1 Total assets							
2 Current assets							
3 Total liabilities							
4 Current liabilities							
5 Profit before taxes							
6 Profit after taxes							

Specify proposed source of financing to meet the cash flow demands of the Project, net of current commitments (Instructions to Applicants, para 3 5)

Source of financing	Amount (US$ equivalent)
1	
2	
3	
4	

Attach audited financial statements for the (number) years (for the individual applicant or each partner of a joint venture)

Firms owned by individuals, and partnerships, may submit their balance sheets certified by a registered accountant, and supported by copies of tax returns, if audits are not required by laws of their countries of origin

APPLICATION FORM (7)

Litigation History

Name of Applicant or partner of a joint venture

Applicant, including each of the partners of a joint venture, should provide information on any history of litigation or arbitration resulting from contracts executed in the last 10 years or currently under execution A separate sheet should be used for each partner of a joint venture

Year	Award FOR or AGAINST Applicant	Name of client, cause of litigation, and matter in dispute	Disputed amount (current value, US$ equivalent)

Attachment B

Evaluation Criteria

APPENDIX B

EVALUATION CRITERIA (PASS/FAIL)

PREQUALIFICATION FOR INTERNATIONAL COMPETITIVE BIDDING OF CONSTRUCTION OF NOMINAL 50 MW COAL-FIRED CIRCULATING FLUIDIZED BED POWER PLANT FOR YEREVAN GAS COMBINED CYCLE POWER PLANT PROJECT

REFERENCE	REQUIREMENTS	PASS	FAIL	REMARKS
	• All documents have been notarized and certified by the relevant entity of the Government of the Employer			
2 3	• Total amount of EPC contracts within the last five years more than US $500 million			
2 4	• Exclusive agreement between the CFB boiler manufacturer and the Applicant			
2 5	• Applicant and/or the CFB boiler manufacturer completed at least one combined cycle power plant with output larger than 400 MW outside its domicile county			
2 6	• Applicant has only one application			

GT Gas Turbine

REFERENCE	REQUIREMENTS	PASS	FAIL	REMARKS
2 7	• Manufacturers identified for – Gas Turbine – Steam Turbine – Heat Recovery steam generator – Electric generator – Power transformer			
	• The manufacturer has five years experience in the manufacture of the above equipment			
2 8	• The gas turbine has 7500 hours of actual operating experience			
	• The offered model is "similar" to the machine with 7500 hours of commercial operating experience			
	• Written confirmation of satisfactory operation provided by the Owners			

REFERENCE	REQUIREMENTS	PASS	FAIL	REMARKS
2 9	• Applicant submitted the following documents – Experience and performance on similar size projects – Supporting letter(s) from Owners – Experience and performance of manufacturers to be engaged for supplying the major equipment – commitment letter from gas turbine manufacturer – Audited annual report			
2 11	• The Applicant has qualified personnel as – Project Manager – Project Engineer Manager – Site Manager – Manager, Procurement – Lead Mechanical Engineer – Lead Electrical Engineer – Lead Controls Engineer – Lead Civil/Structural Engineer			
3(a)	• A photocopy of business registration certificate submitted			
3(b)	• Certificates by public accountants to the Applicant's financial statements submitted			
3(c)	• Completion certificates submitted			

REFERENCE	REQUIREMENTS	PASS	FAIL	REMARKS
4 1(a)i	• The lead partner of the Joint Venture or consortium meets 100% of the qualifying criteria			
4 1(2)ii	• The other partners of the Joint Venture or consortium meet 50% of the qualifying criteria			
5 1	• The Applicant does not have any conflict of interest			

A 6 Project Implementation Schedule

The Project Implementation Schedule is graphically presented in Figure A 6-1

The Schedule contemplates project completion 30 months after the Notice to Proceed, commissioning continues 6 months thereafter until the Commercial Operation Date is attained

The significant milestone dates are as follows

Date, months after N7P	Event
9	Complete Site Demolition
15	Complete Foundation
20	Complete Equipment Erection
26	Complete Piping
26	Complete Electrical Installation
28	Complete Building Architectural
29	Complete Startup
30	Begin Commissioning
36	Commercial Operation Date

Activity ID	Activity Description	Budgeted Cost	Orig Dur
00999	NOTICE TO PROCEED	0	0
01000	DETAILED DESIGN & PROCURE	0	10
10000	DEMOLITION	2189255	9
10005	BUILDING/ARCH	1749902	7
10008	CONSTR MGMT SUPPORT	61921185	27
10010	FOUNDATIONS/STEEL	6939549	5
10015	ROAD PAVING	0	3
10020	HRSG #1	8379487	2
10030	HRSG #2	8379487	2
10040	CONDENSER & STG	16353774	2
10050	CTG #1	35584122	1
10060	CTG #2	35584122	1
10070	SET EQUIPMENT	21747458	6
10080	MECH PIPING INSTALL/INSUL	11647299	11
10090	HVAC	907900	5
10100	FIRE PROTECTION/DETECTION	1376455	5
10110	SWITCHYARD	0	3
10120	TRANSFORMERS	3153000	2
10130	ELECTRICAL INSTALLATION	1658412	9
10140	I&C INSTALLATION	5249983	6
10150	TRAINING	0	3
10160	WALKDOWN/TESTING	0	3
10170	CHECKOUT S/U & PERF TESTING	233600	3
10180	CLOSE-OUT	0	2
10200	PROJ COMPL	0	0
10210	COMMISSIONING	0	6
10250	COD	0	0

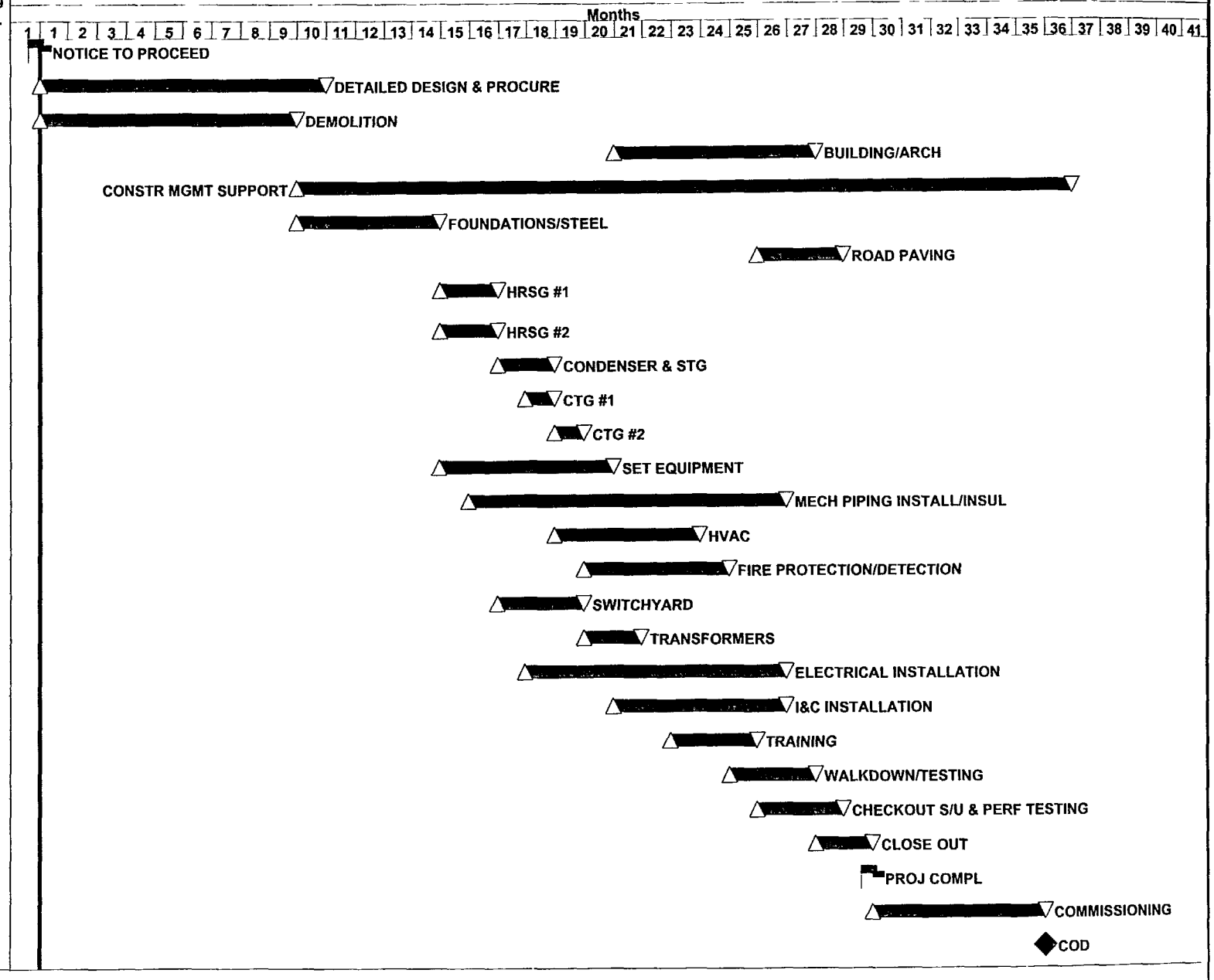

Run Date 10SEP98

Early Bar
Progress Bar
Critical Activity

5928

Sheet 1 of 1

US AGCY FOR INT L DEVELOP
ARMENIA YEREVAN CHP REPOWERING
PROJEC[illegible]NSTRUCTION SCHEDULE

© Primavera Sy

A 7 Operating Plan

1 INTRODUCTION

A power plant must be operated in a safe, efficient, economic and reliable manner The tasks involved in achieving this goal include

- Station Staffing and Labor Relations
- Personnel Training
- Procedure Development - including Budget & Cost Control
- Spare Parts & Materials Management
- Management of Initial Operation and Takeover
- Administration of the Power Purchase Agreement and Fuel Supply Agreement

2 OPERATING ORGANIZATIONS AND STAFFING REQUIREMENTS

2 1 Owner

The Owner's Administration Office will be located in Yerevan The staffing will require two (2) expatriate and seven (7) bilingual local personnel to fulfill the duties and responsibilities of the company

The positions and nationality for the Owner's Administration staff are as follows

Position	Nationality
Contracts Manager	Expatriate
Technical Officer	Expatriate
Senior Administrator	Bilingual
Accountant	Bilingual
Accounts Assistant	Bilingual
Administrative Officer	Bilingual
Cashier	Bilingual
Secretary	Bilingual
Wood Processor Operator	Bilingual

The main duties and responsibilities are

- issue invoices, obtain payment, distribute to partners,
- administer the Power Purchase Agreement (PPA) and Fuel Supply Agreement (FSA),
- liaison with the operating plant and Governmental agencies,

- public relations coordination,

- coordinate home office support for technical, training, and other services,

- arrange expatriate recruitment, mobilization, leave, medical, housing, etc , for operating and maintenance company

2 2 Plant Operations

The site staff will be composed of full time permanent employees This work will be divided into four major functions

- Operations
- Maintenance
- Services
- Administration

Accordingly, four departments are established to carry out these functions The head of each of these departments is responsible to the Station Manager, who is fully responsible for the operation of the power station

Existing CHP plant personnel will be utilized since the GTCC facility is integrated within the entire site GTCC time charges will be apportioned pro-rata as indicated by an (*)

Figure A 7-1 shows the operating company organization, by department and the number of positions under each department Site staffing will be taken from the existing CHP personnel and retrained in new technology, new personnel will be hired as well

2 2 1 Operations Department

The Operations Department will consist of an Operations Manager, Lead Operators for each shift, and Operating Staff The Operations Manager will be responsible for the efficient and safe operation of the plant and will carry out his duties through the operations shift personnel

Shift personnel will be assigned to three continuously rotating 8-hour shifts, each headed by a Lead Operator Principally, each unit will be operated by its individual shift operator, except for services common to all units where operating personnel will be assigned on the basis of multiple unit operation

The Operating Department staff positions, number of personnel and expected nationality are as follows The symbols for Nationality are Expatriate (XP), Bilingual National (BLN), National (N)

Positions	Number	Nationality
Operations Manager	1	XP (†)
Operations Manager	1	BLN
Shift Lead Operator	4	XP(+)
Shift Chief	4	N
Control Room Operator	10	N
Auxiliary Operators	20	N
Apprentice Operators	15	N
Total Positions	55	

Consisting of 5 Expatriates, 50 Nationals

(†)Mobilization and Early Years Operation only

2 2 2 Maintenance Department

The Maintenance Department is headed by the Maintenance Superintendent There are six Maintenance Engineers each with their own area of responsibility, covering mechanical, electrical, and instrumentation and control (I&C) maintenance, respectively Together they are responsible for the maintenance of the complete power plant including all generating and auxiliary equipment, located in buildings and adjacent areas They report directly to the Maintenance Superintendent

Work crews are directed by foremen who report to their designated Maintenance Engineer Except for abnormal conditions, most of the maintenance work is performed on a day work basis A minimal maintenance crew is retained during the other shift to handle emergency repairs

Schedule and controls are established for the performance of the maintenance work A complete set of files giving the maintenance history of all equipment will be maintained Work orders, work completion reports, requisitions for tools, materials, spare parts, etc , will all be required The Maintenance Superintendent will be in close communication with the Operations Manager and the office of the Station Manager, to establish mutually satisfactory schedules, priorities, budget requirements, etc

The plant is expected to be kept in running condition by its own personnel who will be required to execute minor changes in equipment, additions and replacements as well as routine maintenance

Major overhauls will need the assistance of outside personnel such as vendors and local contractors

A description of each group and the skills required follows

- Mechanical Personnel

  This group will supervise overhauls on turbines, boilers which will be carried out by a combination of station, manufacturers and contractors staff The station staff will carry out preventative maintenance routines on all items of the plant In addition to all planned overhauls, this group will perform necessary maintenance and emergency repairs in accordance with work orders and priorities established by the Maintenance Superintendent

  A sufficient number of craftsmen and helpers are assigned to this group to assure the presence of at least one craftsman and one helper during each shift

- Electrical Personnel

  This group will perform and carry out preventive maintenance routines on all electrical equipment of the plant They will be responsible for repair and maintenance of automatic control gear, relays and protective devices and all instrumentation associated with the generator, transformers and switchgear At least one electrician is planned to be on duty during each shift

- I&C Personnel

  This group will be responsible for maintenance, calibration and repair of all instruments and automatic control apparatus in the plant This pertains to the boiler/turbine cycle and all auxiliary mechanical equipment It may include specialists for pneumatic and for electrical instruments at the outset, however, it will be preferable if eventually all members of this group become equally adept in maintaining, adjusting and calibrating both types

  Some of the Instrument Technicians will become thoroughly skilled in routine maintenance procedures of the data logging equipment

  The Maintenance Department staff positions, number of personnel and expected nationality are as follows

Position	Number	Nationality
Maintenance Superintendent	1	N
Safety and Environmental Manager	1	N
Mechanical Maint Engineer	2	N
Asst Mech Maint Engineer	1	BLN
Mechanical Supervisor	5	N
Mechanical Craftsmen	18	N
Electrical Engineer	2	N
Electrical Supervisor	1	N
Electrical Craftsmen	4	N
I&C Engineer	2	N
I&C Supervisor	2	N
I&C/Elec Specialists	2	XP
I&C Technician	4	N
DCS Technician	2	N
I&C Supervisor	2	N
I&C Craftsmen	20*	N
General Helpers	25	N
Total Positions	93	

Consisting of 2 Expatriates, 91 Nationals*

2 2 3 Services Department

The Services Department consists of several groups whose functions are as follows

- Chemistry
- Plant Performance
- Planning
- Improvement
- Training
- Fire and Security
- Buildings and Grounds
- Vehicles
- Cleaning

Position		Number	Nationality
	Station Manager	1	XP
	Plant Manager	1	N
Chemistry -	Station Chemist	10	N
	Lab Equipment Operators	10	N
Plant Performance -	Performance Engineer	2	N
	Performance Technicians	4	N

Position		Number	Nationality
	Station Manager	1	XP
Training -	Training Officer	1	BLN
	Training Assistant	2	BLN
Fire & Security	F&S Officer	1	BLN
	Fire Crew on Shift	4	N
	Security Crew on Shift	3	N
Building/Grounds -	Foreman	2	N
	Service Trades	*	N
Vehicles -	Supervisor	*	BLN
	Drivers	*	N
Cleaning -	Foremen	*	N
	Plant/Site Cleaners	*	N
	Total Positions	31	
		Consisting of 1 Expatriate and 30 Nationals	

2 2 4 Administration Department

The Administration Officer will be responsible for all general office work which is not directly related to operation or maintenance of the plant This department will require sufficient office space to accommodate the files containing all records relating to personnel, accounting, purchasing, correspondence and internal plant and system communications In addition to his office in the Administration Building, suitable office accommodations for his staff will be provided

The department will be responsible for

- All bookkeeping activities, payroll, receipts and disbursements of funds, financial statements and reports, requisitions for funds, etc

- All purchasing and procurement activities This involves preparation of purchase orders and inquiries, obtaining and verifying requisitions for materials, parts and services from the Operating and Maintenance Departments, placing purchase orders, expediting deliveries, maintaining the inventory in the warehouse and stores and administering contracts when required for work performed by outsiders

- Recruiting staff, maintaining personnel files and records, enforcement of personnel policies, supervision of secretaries, typists and clerks, and their assignment to other supervisors as needed, public relations, implementation of promotions and terminations upon receipt of appropriate recommendations from the supervisors

- Allocation, procurement and/or repair of office equipment and furniture, telephone, stationary and supplies and supervise mailroom, messenger and canteen services as well as first aid, safety and health services

The Administration Department Staff positions, number of personnel and expected Nationality are as follows

Position	Number	Nationality
Business Manager	1	XP(†)
Administration Officer	1	BLN
Administration Clerks	6	BLN
Telephone/Receptionist	3	BLN
Salaries/Payroll, including Personnel/Welfare	6	N
Purchasing Agent	3	N
Stores/Warehousing Assistant	4	N
Nurses	2*	N
Canteen Staff	6	N
Total Positions	30	
	Consisting of 1 Expatriate, 29 Nationals	

3 REQUIRED SKILLS AND QUALIFICATIONS

3 1 Operating Company

The operation of a modern steam-electric power station requires competent, experienced managers and superintendents, a group of engineers, technicians and assistants, and skilled and unskilled workers

The breakdown of skills and qualifications of the organization to operate the two-unit 400 MWe power station is as follows

Skill Level	Quantity	
	Expatriate	Nationals
Managers & Superintendents	3	5
Engineers	6	8
Operators/Tech /Assistants	-	118
Clerical Staff	-	15
Skilled Workers	-	28
Unskilled Workers	-	26
Total 209, of which	9	200

It would be desirable to recruit staff already skilled in power plant operations and maintenance However, as there is a limited supply of such personnel in Armenia it is anticipated that many staff will be recruited with basic skills which will be improved by on-and-off-site training Initially many of the key positions will be filled by skilled expatriates who will only need familiarization training, Later, as increased experience is accumulated, local staff who have been retained will be used on these tasks and expatriate staff will depart

3 1 1 Managers and Superintendents

The Managers and Superintendents are persons who have had extensive experience in thermal power station operation

The Station Manager, having total overall responsibility for the plant, will have to be a person of stature and competence who has earned the complete confidence of the Project Company He will be a professionally qualified graduate engineer and have considerable experience in plant operation and maintenance His total power plant experience will be in excess of 20 years He will be well versed on the industrial and utility management community in Armenia

The Assistant Station Manager should have the capability of assuming all of the responsibilities of his supervisor and is expected to do so during his absence Accordingly, he should possess similar qualifications

The Operations Superintendent must have at least 5 years experience in the position of Charge Engineer and at least 15 years of work experience in operation of steam electric power stations He should be professionally qualified and have the managerial ability to control and motivate a group of 50 operations staff

The Maintenance Superintendent will be professionally qualified and have at least 15 years experience in power plant maintenance His experience must demonstrate an ability to manage people of diverse skills against a detailed technical and financial background He must be able to deal with manufacturers, contractors, government and utility staffs on technical and commercial matters His previous experience will include progressively increasing responsibility in one or more areas of maintenance activity

The Services Superintendent must have at least 15 years of work experience in operation of steam electric power stations It is preferable that he be a graduate engineer, versatile with special interests in technical innovations, planning power station activities and plant procedures He would be expected to have the ability to manage a team of some 100 staff performing a wide range of duties such as chemistry, planning, security, fire protection and janitorial services

The Administrative Officer, preferably, should have at least ten to fifteen years experience as a plant and office administrator of a large organization with a number of years in a position which places him directly responsible to top management He should have demonstrable capabilities and experience in setting up practices and procedures implemented by necessary forms, schedules and standard procedure instructions He should have experience in accounting and cost control practice and in personnel labor relations and office management It is desirable that he has a professional qualification in a business area such as administration or accountancy and that he has had some paralegal training as well

3 1 2 Engineers

The engineers should, of necessity, be a blend of experience and qualifications High technical ability may be offset against lack of experience where appropriate but generally a minimum of five years experience in a similar post is desirable Computer literacy is absolutely required

3 1 3 Operators, Technicians and Assistants

The Operators must be able to demonstrate that they have an appropriate technical qualification/license plus at least three years experience in charge of plants of similar size

The Technicians will have technical qualifications either at degree level or can demonstrate high competence in the particular area and a lesser technical qualification It is unlikely that a graduate without at least two years experience would be suitable for this position The person with a lesser qualification will have had more experience, probably three to five years

The Assistant Maintenance engineer would have a combination of qualifications and experience The essential aspect is that they demonstrate at least two years experience in the appropriate area with graduate or lesser qualification

3 1 4 Clerical Staff

This category are office workers such as word processing operators, receptionist, typists, clerks for such work as technical, purchasing, stores/warehousing, accounting and other administrative work

3 1 5 Skilled Workers

This category considers foremen and craftsmen of the various trades such as electricians, carpenters, machinists, instrument men, pipefitters, required in a steam generating power station

The personnel, will have had a minimum of 5 years experience at full competence level plus several prior years of apprenticeship

3 1 6 Unskilled Workers

The work performed by workers in this category can be carried out without requiring substantial prior training or experience

The positions which may be staffed with unskilled workers are general maintenance helpers, vehicle drivers, plant/site cleaners, canteen staff and security guards

3 2 Recruiting Sources

- Operating Staff

  Initially all senior operating staff, will be expatriates who will be recruited as experienced personnel with a training need only in the area of plant familiarization Expatriate staff will be used throughout the commissioning program and a training organization will be set up to subsequently train senior local operating staff and the more junior staff

  The sources of local staff will be either direct entry with no power plant experience for training to occupy the junior operating positions such as Outside Plant Operator or with some power plant experience for training as Assistant Unit Operator Staff with power plant operating experience will be solicited from existing power companies Staff from the existing companies may only be available in limited numbers if the country's power development program is not to be jeopardized

- Maintenance/Services Staff

  Unlike the expertise of the operating staff, the skills required by the maintenance and services staff are widely practiced in various industries This simplifies the problem of recruiting qualified help Nevertheless, the type of equipment and the degree of reliability of its operation are different in central power stations and it will be desirable to have a nucleus of staff who are experienced in this type of work All maintenance/services personnel will participate in the training program except for the unskilled groups

- Administration Staff

  The Administration Assistant position preferably is filled with the Power company's present personnel This will assure conformity with general policies and practices prevalent in the company The remaining personnel may be recruited in country

related to the experience and skills required for the various duties No prior utility system experience is required and no training specifically related to the new plant appears to be necessary other than an understanding of the new business

3 3 Training Programs

The Operating Company will have training programs covering a wide range of skill requirements which are modular based The function of the resident training organization is to assess the training needs of the various groups of people and to construct courses which will fulfill these requirements

The earliest training requirement is that of plant familiarization and this is achieved by selecting a nucleus of the senior staff and briefing them on the plant design by the manufacturers This is reinforced by the timely production of the plant manuals With these two points achieved the basis is laid for constructing initially plant operations training followed later by plant maintenance training These two training areas will be plant specific and will enable people to actually operate and maintain the plant

In addition standard training modules will be available on such topics as pressure, temperature, basic electrical theory, water chemistry, etc Where specialized training is required this will be either by the use of manufacturers' personnel or site staff specifically trained by the manufacturer Both full-time and part-time instructors will be used as it is beneficial for example to have certain aspects of operator training carried out by "hands on" experienced operators

All training will be carried out in training rooms generally separated from the plant and equipped to make learning as easy as possible Use will be made by the operating company's expertise in training foreign nationals and the various technique previously used such as self tutor computer based schemes All training will be assessed and progress will be regularly reviewed Lecture room work is supplemented by plant visits and on job training As the needs of individuals will be assessed the power company possesses offshore training facilities which will be used if required These can take the form of managerial courses, plant simulator, craft skills or a variety of other areas

If will be necessary to identify much of the basic training material in advance of attendance at the power plant site but it is anticipated that the senior management team will be on the site six months before the first unit is synchronized They will be in a position to commence detailed training in sufficient time to supply operating and maintenance staff capable of assisting the turnkey contractor during the pre- and initial commissioning of the first unit As most of the expatriate operators will be recruited before the first unit is synchronized they will be available to operate that unit and assist the full time instructors in training the local staff required for plant operation

The need for maintenance staff has to be accommodated with the gradual withdrawal of the vendor's resources when the units are built Self-sufficiency for routine and basic maintenance must be achieved by the time the last unit is completed

It is generally accepted that Russian will be the language of the power station and Russian language tuition will be provided However, sufficient bilingual staff will be provided to enable the training to be achieved at those levels where it is not necessary to insist on Russian being spoken and Armenian can be the common conversational language Many operating manuals may be in English and German, and will need to be translated

FIGURE A 7-1

Station Manager

Plant Manager

Operations Manager

Shift Lead Operator
Shift Chief
Control Room Operators
Auxiliary Operators
Apprentice Operators

Maintenance Superintendent

Safety & Environmental Manager
Mechanical Engineer
Mech Supervisor
Mechanical Craftsmen
Electrical Engineer
Electrical Supervisor
Electrical Craftsmen
I&C Engineer
I&C Supervisor
I&C/Elec Specialists
I&C Technician
DCS Technician
General Helpers
I&C Craftsmen

Services Superintendent

Chemistry
Station Chemist
Lab Equip Operators

Plant Performance
Performance Engineer
Performance Technicians

Training
Training Officer
Training Assistants

Fire & Security
F&S Officer
Shift Fire Crew
Shift Security Crew

Building & Grounds
Foreman
Service Trades*

Vehicles
Supervisor*
Drivers*

Cleaning
Foremen*
Plant/Site Cleaners*

Administration Officer

Business Manager

Administration Clerks
Telephone/Receptionist
Personnel/Welfare
Salaries/Payroll
Accounts/Billing
Purchasing Agent
Store/Warehousing Asst
Medical Officer*
Nurses
Canteen Staff

*Utilize CHP personnel

APPENDIX

Field Sketches and Site Drawings

The investigating team was "in-country" between February 1998 and June 1998 Field sketches have been prepared to outline pictorially the existing system and facilities and are presented herewith Additionally, plant drawings, specifications and data sheets have been supplied which form the basis for the Feasibility Study Bidding Documents as presented in the response to Subtask C These are listed below

1 Yerevan TPP - Site Plan (M 1 5000 in 5 parts)
2 Yerevan TPP - Site Plan (M 1 500 in 8 parts)
3 Yerevan TPP - Site Plan (M 1 2000 in 1 part)
4 Units 6 and 7 General Arrangement Drawing
5 Unit 7 Circulating and Technical Water Diagram
6 Unit 7 Circulating Water Diagram
7 Units 6 and 7 Main condensate feedwater system
8 Units 1-6 Circulating Water Diagram
9 Yerevan TPP - Technical Water diagram (Main pumping house to machine room)
10 Technical Water Supply system (cooling towers arrangement)
11 Main Pumping House (isometric drawing)
12 Pumping House No 2 (equipment)
13 Pumping House No 2 (pipelines)
14 Units 6 and 7 Isometric Structural Drawing (turbine hall)
15 Turbine Hall Structural Drawings (total of 4 drawings)
16 kV Switchyard Line Diagram
17 and 35 kV Switchyards General Layout (total of 3 drawings)
18 Major Electrical Equipment (2 drawings)
19 Units 6 and 7 Pedestal and Buildings Structural Drawings (total of 12 drawings)

Other various materials were collected for the Yerevan TPS Major data includes

- Yerevan TPP - Raw water composition analysis
- Yerevan TPP - Make-up water composition analysis
- Yerevan TPP - Meteorological, Seismic and Soils Data
- Yerevan TPP - Fuel analysis for gas and mazut
- Yerevan TPP - Cooling towers data
- Yerevan TPP - Major electrical equipment data

<u>Attachments</u>

A-1 Existing Plant
A-2 Existing Plant with new proposed CC System
C Available Area
D-1 Cooling Circulating Water Loop Schematic
D-2 Makeup Water Schematic Diagram

TPP main diagram

Принципиальная схема ТЭЦ (Главные паропроводы, паропроводы 25 ата) Main steam lines, steam lines 25 bar)

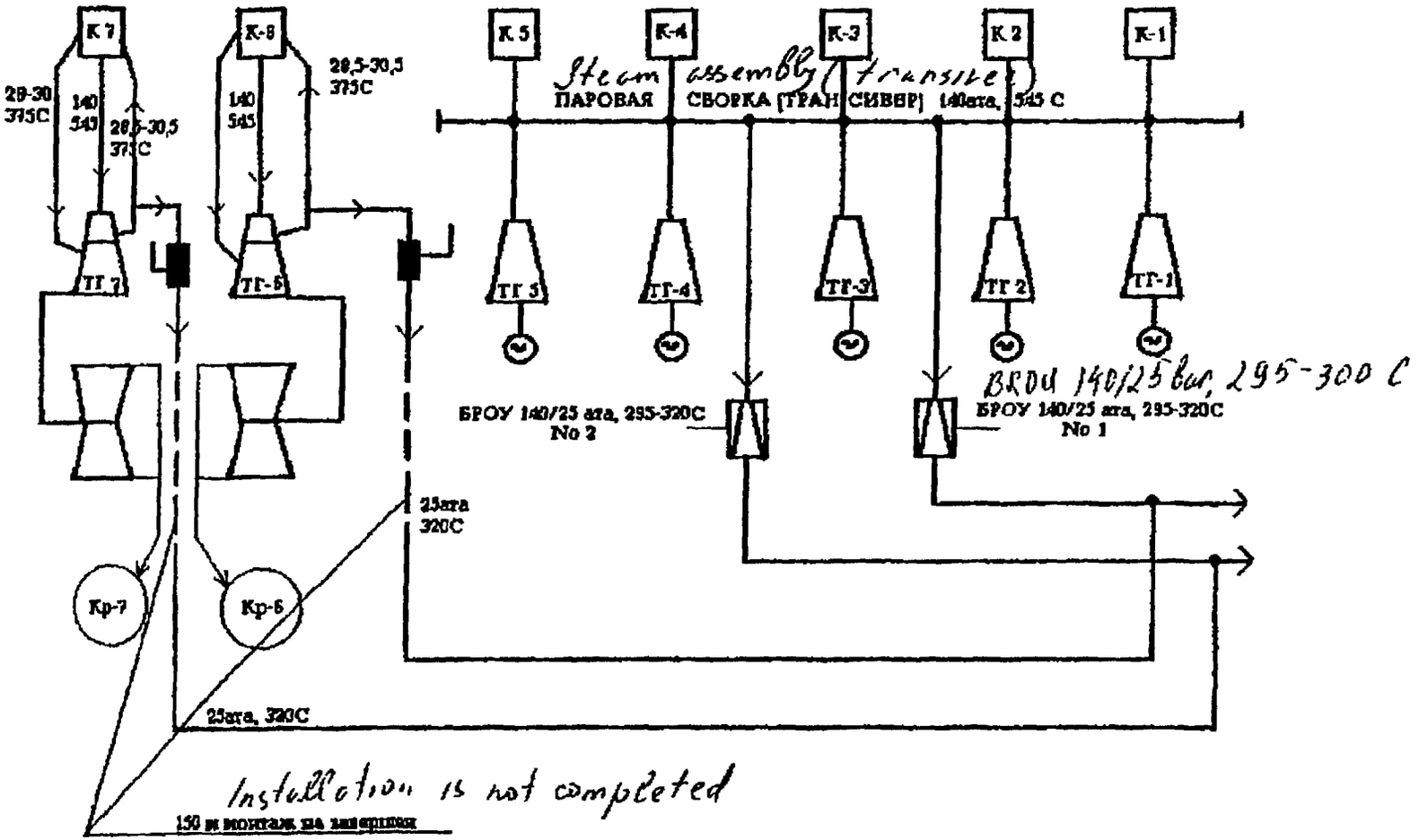

150 и монтаж на завершении

		TGM t/h	gas mazut
К1,2,3,4,5		ТГМ-84 420 тн/час, 140ата, 545 С, газ,мазут	
К6,7		ТГМ-94 520 тн/час, 140ата, 545 С, газ,мазут	
ТГ1,2,4,5	PT	ПТ-60 130/13, 60 Мвт, отборы 13ата, 1,2ата	
ТГ 3		Р-50 130/13, 50 Мвт, отбор 13ата, противодавление	
ТГ6 7		К-150 150мвт отбором 25 ата, 320С 2,5 5ата 320 С	

Attachment "A"-1
Existing Plant

BEST AVAILABLE COPY

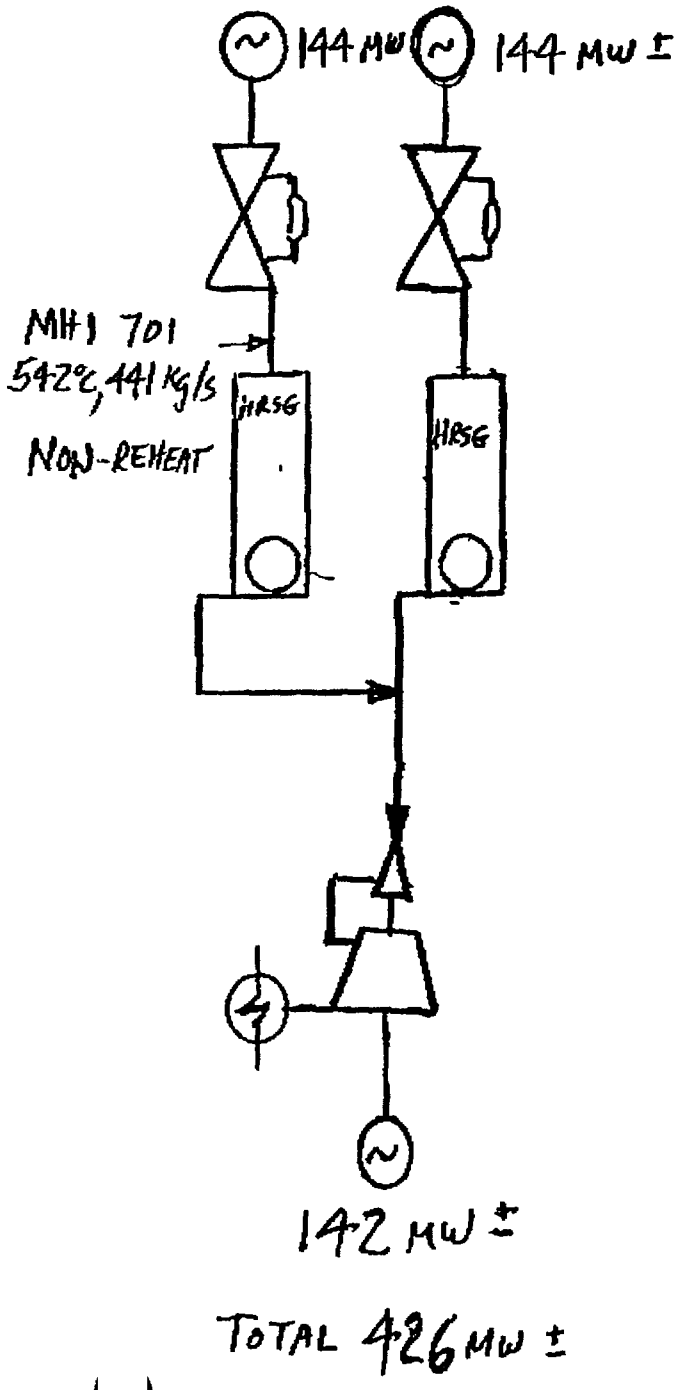

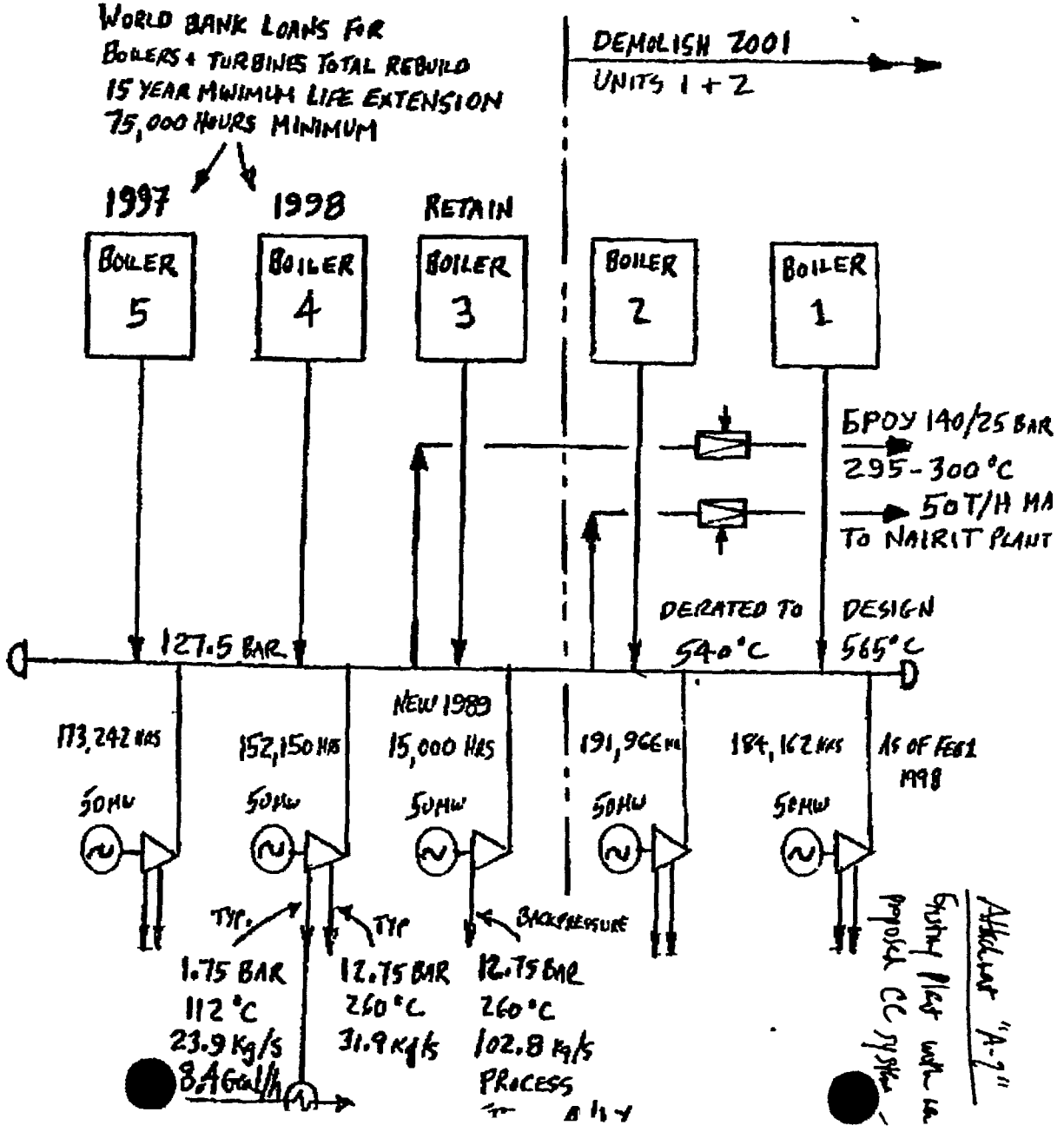

Attachment "A-7"
System Plot with the proposed CC system

87

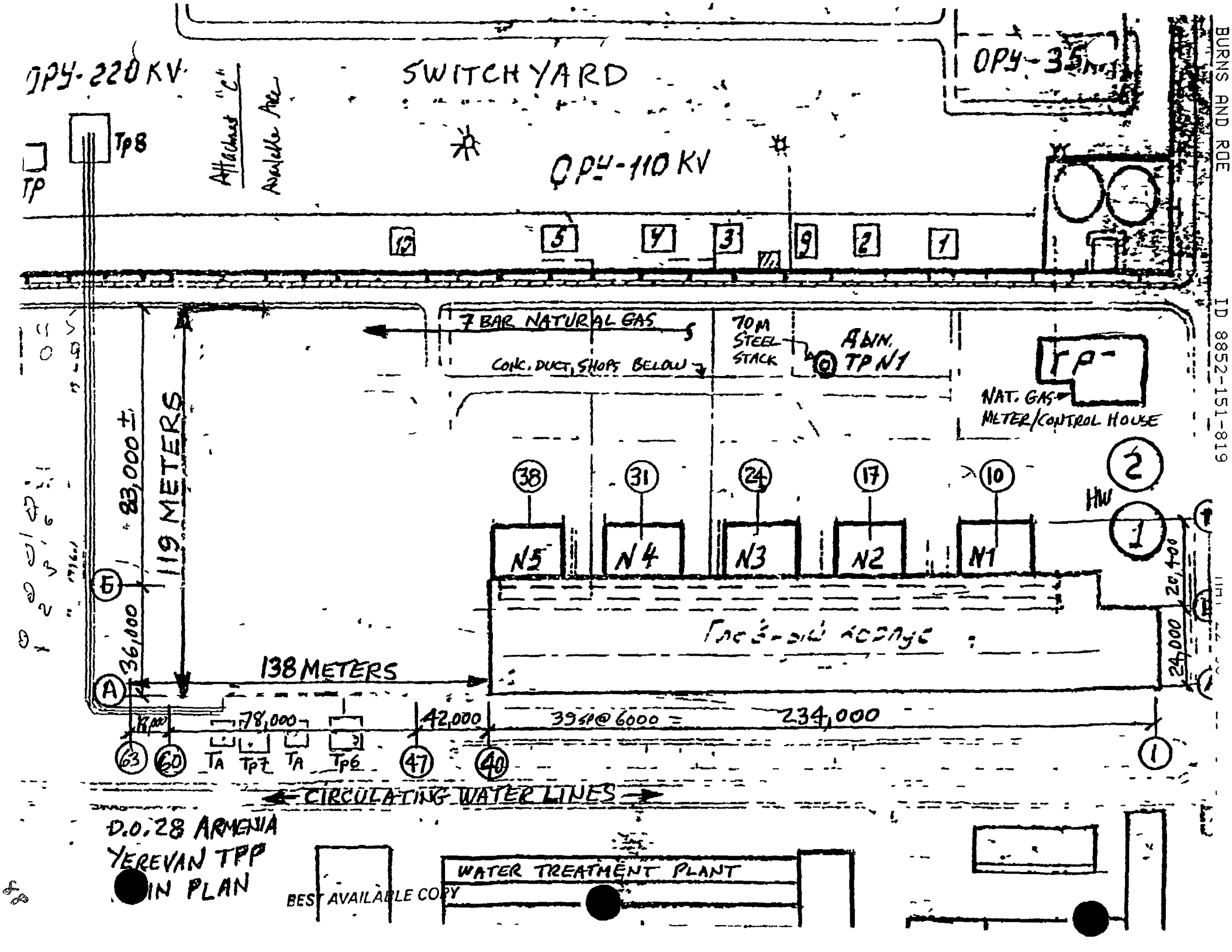

BURNS AND ROE
ID 8852-151-819
BEST AVAILABLE COPY

CIRCULATING WATER

sketch 3

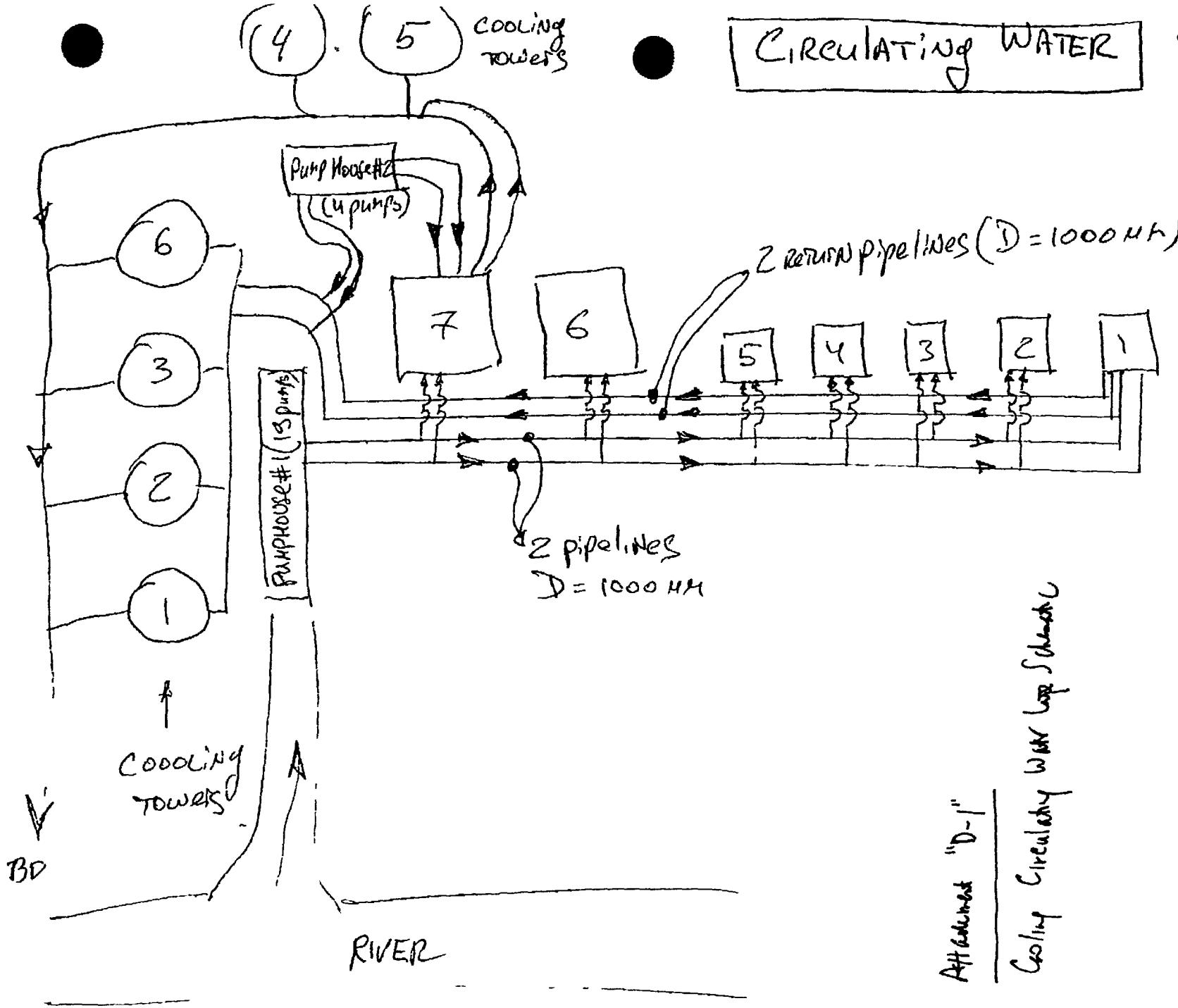

Attachment "D-1"

Cooling Circulating Water Log Schematic

BEST AVAILABLE COPY

Attachment "D-2"
Makeup Water Schematic Diagram

WATER TREATMENT

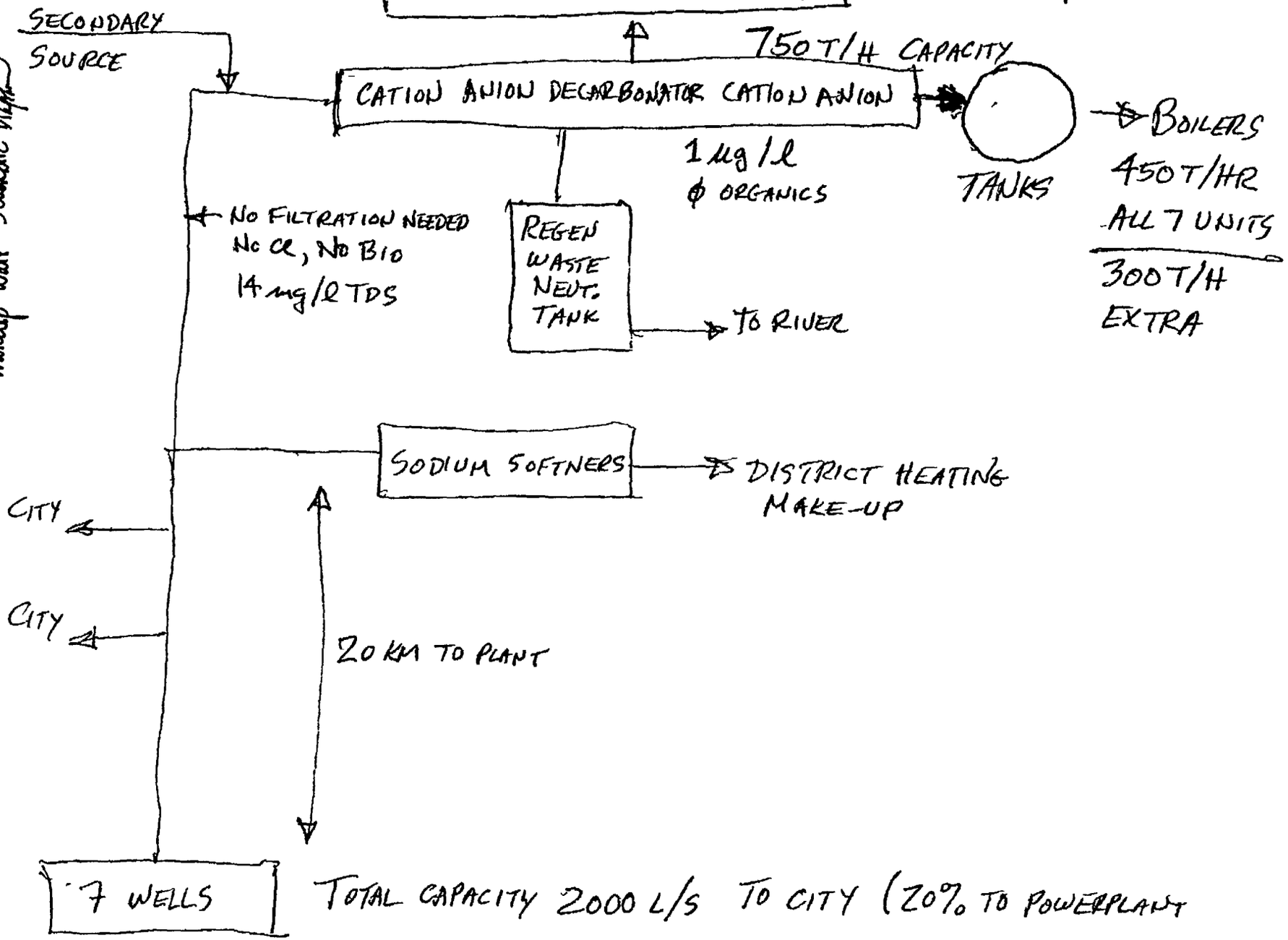

BEST AVAILABLE COPY

Table of Contents

Subtask B - Financial, Economic and Risk Analysis

Section	Item	Page
B 1	Financing Plan	B-1
B 2	Economic and Financial Rates of Return	B-22
B 3	Risk Analysis	B-27
Appendix A	Summary of Armenian Tax System	B-34
Appendix B	Financial Tables	B-35

B 1 Financing Plan

A Financing Plan will be established at the appropriate time when this Project is proceeding toward fruition

In order for this Plan to be implemented, the Owner's organization must be established Owners will be creditworthy individuals or companies who will collectively establish a Project Company by executing an agreement known as, variously, a Partnership Agreement, Joint Venture Agreement or Consortium Agreement This Agreement will define the rights and responsibilities (including commitment of equity funding) of the individual and collective participants

Upon this Agreement being executed and approved by the relevant Ministry as a partially foreign-owned venture, the Owners need to retain legal representation and tax accountants

A major milestone in the development of the Project is retaining a financial consultant in order to establish available loan sources, and retaining a professional international consulting engineering company in order to closely define the conceptual design and prepare a highly accurate capital cost estimate The participation of these entities will result in the creation of a financial model utilizing the inputs as listed in Table B-1

TABLE B-1

Input to Financial Model

($US 1998 basis)

Capital Costs

- EPC Capital Cost Estimate
- Working Capital
- Initial Spare Parts
- Project Implementation Schedule, from NTP until COD
- Disbursement Schedule during Construction
- Owner's Contingency

Owner's Development Costs

- Financial Adviser Fee
- Success Fee
- Attorneys and Tax Accountants' Fees
- Land Acquisition Costs
- Owner's Insurance Costs
- Interconnection Charges
- Government Permits

Financing costs

- ECA Interest Rates (US EXIM, World Bank OPIC, others)
- Commercial Base Interest Rates
- Tenor Duration for Repayment of construction Loan
- Debt/Equity Ratio
- Currency Exchange Rate
- Escalation/Inflation Rate

Taxes

- Tax Holiday for New Investments
- Property Tax
- Gross Profits Tax

Operating Costs

- O&M Cost Estimate

  - Employee Salaries
  - Statutory Employee Benefits
  - Fuel Costs
  - Miscellaneous Costs (life cycle maintenance, etc)
  - Chemical Costs

Elaboration of Financing Plan concepts is given in the attached section entitled "Attributes of Financeable Independent Power Projects, prepared by Keith W Kriebel of Orrick, Herrington and Litcliff LLP, copyright 1997, all rights reserved It is reprinted by permission Supplementary observations have been included

ATTRIBUTES OF FINANCEABLE INDEPENDENT POWER PROJECTS

The following is a brief outline of the attributes that an independent power project, whether domestic or international, typically must possess to support debt incurred on a "project finance" basis The outline sets forth the general principles applicable to project financing, and contains descriptions of the primary elements of major project contracts project finance lenders will examine to evalute the ongoing viability of a project for which non-recourse (or limited recourse) financing is being sought

I PRINCIPLES OF PROJECT FINANCE

A General Concepts
B Assembling the Basic Deal
C Retaining a Financial Advisor

II FINANCEABLE POWER PURCHASE AGREEMENTS

A Power Purchaser
B Electricity Pricing
C Certain Non-Price Provisions

III FUEL SUPPLY AND TRANSPORTATION AGREEMENTS

A Quantity of Fuel
B Firm Supply
C Performance by Fuel Supplier/Transporter
D Fuel Quality
E Fuel Reserves
F Revenue Sufficiency
G Other Lender Risk Assessment Issues

IV OPERATIONS AND MAINTENANCE AGREEMENT

A Characteristics of Operator
B Operation and Maintenance Obligations
C Operating Costs
D Project contracts
E Other Lender Risk Assessment Issues

V OTHER STRUCTURAL ISSUES

A Change in Law
B Expropriation
C Convertibility and Exchange Rates
D Dispute Resolution, Choice of Law and Forum
E Government Guarantee, Waiver of Sovereign Immunity
F Commercial Law Issues
G Relationships Between the Parties
H Design and Construction Contract

I PRINCIPLES OF PROJECT FINANCE

A General Concepts

"Project finance" generally is considered to be debt financing that is provided on the strength of the anticipated net cash flow of a project entity established for the sole purpose of developing, constructing, owning (or leasing) and operating a stand-alone business enterprise, such as an electric generating facility Because lenders will not be looking to the balance sheet of an established, creditworthy entity as security for repayment of the loan, the commercial and contractual arrangements that comprise the project (including the identity and creditworthiness of counterparties to key contracts) will serve as the real bases for the extension of credit In this narrative, the project entity will be called "the Owner"

Non-recourse loans typically will be made only if a project's commercial and contractual arrangements can be expected to generate revenues predictably and reliably across a range of anticipated operating scenarios that will represent a multiple (usually an average of at least 1 5 to 1 00, and preferably much higher) of scheduled debt service, after deducting all operation and maintenance expenses (including funding of reasonable reserves) Such arrangements necessarily must be in place for at least the scheduled term of the debt, and most lenders will insist upon a "tail", that extends for at least two to three additional years in case unexpected problems delay debt repayment beyond the scheduled term

In order to benefit from a project's commercial and contractual arrangements following a borrower default, project finance lenders (or purchasers in foreclosure) must be able to step into the borrower's shoes with respect to all of its various rights and obligations relating to the project, including real and personal property interests, permits and other governmental approvals, and contracts Thus, in addition to being satisfied with the commercial basis of a deal, lenders must be assured of having enforceable security interests in everything necessary for the project to generate the required revenues

B Assembling the Basic Deal

Project finance transactions are premised upon the creation of a stand-alone business that will, under all reasonably anticipated circumstances, always be able to generate net revenues sufficient to repay project debt and earn a satisfactory return for the Owner The basic components of such a business are contained in what are usually referred to as "project documents", (as distinguished from the documents pursuant to which financing is provided) Project documents typically include

1 <u>Real estate documents</u> documents which provide the project Owner with all interests in real property that may be necessary to build, own and operate the project Real property may either be owned in fee, or be leased or provided under an easement Regardless of the form in which interests in real estate are held, the relevant documents must provide that the Owner cannot be dispossessed from the real property it occupies absent extraordinary circumstances (such as condemnation, so long as adequate compensation is paid) In addition, the Owner's real property interests must be susceptible to enforceable security interests (such as a mortgage or deed of trust) in favor of the lender

2 Permits and governmental approvals authorizations needed from applicable governmental entities in order to own and operate the project, including environmental permits, construction permits, and zoning/land use authorizations

3 Construction contract contract pursuant to which the project and its components will be designed, engineered, procured, constructed, commissioned and tested (often on a "turnkey" basis) such that, upon assuming control of the project, the Owner will be able to fulfill its obligations to its off take customers

4 Offtake (power purchase) agreement contract pursuant to which electricity (whether capacity, energy or both) is sold to a utility or other power purchaser This contract is the primary (often the only) source of revenue for the project and as such is deemed the cornerstone for the project as a whole In cogeneration projects there frequently is another off take contract pursuant to which the thermal output of the project is sold The elements of financeable power purchase agreements are described in Part II of this Section

5 Fuel supply and transportation contracts contracts pursuant to which fuel to be consumed in the project is procured and delivered to the project site Because fuel costs generally constitute the largest operating expense for power projects, the delivered cost of fuel and the price received for generated electricity must be synchronized to ensure that net revenues remain sufficient to cover debt services The elements of financeable fuel contracts are described in Part III of this Section

6 Operations and maintenance contract contract pursuant to which a third party operates the project on behalf of the Owner O&M contracts are briefly described in Part IV of this Section

7 Utility services and consumables contracts or other arrangements providing for the ongoing availability to the project on commercially reasonable terms of required utility services, such as process water, potable water, fire water, back-up electricity, and sewer services

8 Insurance policies contracts protecting the Owner's and lenders' investment in the project against losses during construction and operation, covering general liability, providing revenues in the case of business interruption Insurance requirements generally are determined based on specific attributes and risks of the project

In evaluating project documents, lenders look for assurances that all reasonably anticipated risks have been contemplated and addressed in a way that allows the project to remain economically viable for at least the full term of the debt Project documents must complement each other and should not contain contradictory provisions or provisions that put an Owner's or lender's investment at risk unnecessarily or imprudently Specific concerns are addressed below in the description of power purchase agreements, fuel supply and transportation agreements, and O&M agreements

C Retaining a Financial Adviser

At the development phase of a project, the lead developer is charged with the responsibility of retaining a financial adviser This organization may be solicited on a competitive inquiry basis from the wide array of international commercial banks, private placement organizations, or the like Selection of the advisor will then be based upon the experience level, suitability of fee structures, success fee requirement and the like The advisor ultimately becomes responsible for creating and promoting the Debt Placement Memorandum with which the developer will obtain project financing support from ECA's and other credit suppliers The advisor is usually not permitted to be a funding participant

II FINANCEABLE POWER PURCHASE AGREEMENTS

As noted previously, the power purchase agreement or "PPA", is often considered to be the single most important project document because it is the sole or primary source of revenue that will be applied to service debt, pay operating expenses, and provide a return to the Owner Although the provisions of a PPA often will shape the terms of the other project documents (for example, the variable component of the price of electricity should drive price adjustments under a project's fuel supply agreement), an Owner negotiating a PPA can enhance the financeability of a project, and simplify ancillary contracts, by ensuring that the PPA meets certain criteria

A Power Purchaser

Ideally, the power purchaser under a PPA will be an established, well-known, creditworthy entity that has a need for power, a strong customer base, supportive regulators, and a history of honoring contracts with independent power producers Power purchasers lacking any of such traits create concerns for lenders, and although such concerns are not necessarily insurmountable, they will make financing more difficult and costly

B Electricity Pricing

The prototypical pricing structure contained in PPAs supporting project financings consists of two components (i) a capacity (or demand) charge payable by the power purchaser for each kilowatt of capacity that is available to generate electricity when and as required, and (ii) a variable (or energy) charge paid on the basis of kilowatt-hours delivered in a billing period

1 Capacity payments

Capacity charges often are payable on a per-kilowatt-of-capacity basis (regardless of actual output in a billing period) and are calculated to be sufficient to pay all of the Owner's fixed costs incurred to finance and maintain the project, including debt service, other ongoing financing expenses (such as letter of credit fees), and fixed operation and maintenance expenses (such as demand charges payable with respect to fuel supply and transportation), as well as a profit element The Owner does not want its return to be dependent upon actual project operation to the extent the power purchaser, rather than the Owner, determines whether the project will operate or not

The Owner, of course, will want the capacity charge to be as high as possible to maximize its return Lenders, however, will want to ensure that the capacity charge is reasonable and appropriate in comparison to the power purchaser's other sources of generating capacity, lenders will be concerned that high prices will promote breaches by the power purchaser, a concern that is compounded, especially in international deals, where the purchaser is a governmental entity that can point to the national welfare as justification for breaching the contract

Capacity payments usually are made so long as the generating unit meets certain performance and/or availability standards These standards, of course, are heavily

negotiated, with the power purchaser seeking to impose stringent requirements that result in reductions in capacity payments (or in penalties payable by the Owner) for the project's failing to meet high capacity factors in short time frames, with only limited relief for force majeure, plant or machinery breakdowns, lack of fuel, and the like The Owner and the lenders, on the other hand, will want performance measured over a longer period, with substantial relief for force majeure or other failures not within the Owner's reasonable control

Sometimes a capacity component is factored into an overall price per kilowatt-hour of electricity delivered, an arrangement that often is satisfactory for must-run, base load units not subject to economic dispatch To the extent, however, that the ability of a project to operate is dependent on factors beyond the contractual control of the Owner, then a combined capacity/energy payment would be financeable only if the project is deemed to be operating at an acceptable level regardless of actual operations if the failure to operate is outside of the Owner's control In any event, a separately stated and separately payable capacity charge is almost always preferable to a combined payment

2 Variable (energy) payments

Whereas a capacity payment should be designed to cover all of a project's fixed costs (plus profit), variable or energy payments should be sufficient to pay the incremental costs of actually operating the project to generate and deliver a given kilowatt-hour of electricity Energy payments usually are calculated to cover the variable cost of fuel consumed when the project is operating, as well as other variable operating expenses, such as water treatment expenses and costs of consumables

Variable payments often are tied to the power purchaser's own variable costs of generation (if an appropriate analogue exists within the power purchaser's system), or to an index that reasonably reflects changes in operating costs Since the largest component of variable operating costs is fuel, the index by which variable payments under the PPA are adjusted should be heavily weighted to the same index used to adjust the price of fuel under the project's fuel supply agreements

Variable payments assume particular importance if a project is dispatchable or peaking, since the operating characteristics of the generating equipment can change significantly if operated in a dispatchable or short duration, rather than base load, mode Heat rates, for example, can deteriorate during low-load conditions, resulting in increased fuel costs and more frequent maintenance Costs of start-up and shut-down also should be addressed

Finally, the PPA's pricing provisions also should provide for an adjustment sufficient to cover new or higher taxes imposed on the Owner, either through sales or consumption taxes borne by Owner, or through income, withholding, or similar taxes that would have a confiscatory impact on the Owner or the lenders

C Certain Non-Price Provisions

1 Contract term

The term of the PPA should be for the full scheduled tenor of the longest debt instrument used to finance the project, plus at least two years To the extent the generating equipment has a useful life in excess of the base term, but cannot be easily and economically removed, the Owner should seek the right to renew the contract at pre-agreed (or determinable) prices that provide a continued incentive to operate the plant Alternatively, the Owner could seek the right to put the equipment to the power purchaser or its designee at a fair market price

2 Performance standards

Performance standards should be reasonable given the type of equipment utilized and the degree of control the Owner has in arranging supporting contracts Ideally, incentive payments should be made if performance standards are exceeded, and penalties should be calculated to reflect the power purchaser's actual costs in replacing capacity or energy not provided by the Owner In determining performance standards, the Owner should be entitled to perform regularly scheduled maintenance and major overhauls without adversely affecting capacity or availability factors The Owner also should ensure that events of force majeure or power purchaser-caused outages do not adversely affect capacity or availability factors

To the extent the Owner is required to post security to support its performance obligations, the circumstances under which such security may be drawn must be clearly delineated, including, ideally, requiring a final judgment in an arbitration or other dispute-resolution mechanism The Owner should not be required to replenish security to the extent of any draws, the initial amount of security should cap the Owner's up-front exposure (recognizing, of course, that additional amounts may be payable as damages if a court or arbitral tribunal so determines)

The Owner, in turn, transfers the performance obligation to the Construction Contractor by using the liquidated damage clauses as his recourse

3 Force majeure

Force majeure provisions should include all circumstances outside of the control of the party suffering the force majeure, including, in the case of the Owner, the failure by any supplier affiliated with the power purchaser (such as a state-owned oil company) to perform as and when required to allow the Owner to meet its requirements under the PPA Lenders also typically would want labor disputes to constitute force majeure, as well as changes in law or inability to renew permits In international projects, it is essential that changes in law not be permitted to affect the power purchaser's obligation to make contract payments, even if the change impedes the Owner's ability to operate the project This risk

is discussed in somewhat more detail in Part V A *supra*

4 **Default and termination**

Events of default and their consequences should be carefully defined and circumscribed The Owner should seek reasonable periods to cure defaults and thereby forestall PPA contract termination The lenders, in any event, will require appropriate cure rights exercisable following the removal of the Owner as operator of the plant The Owner also should seek the option to pay liquidated damages in lieu of termination, the Owner thus would be able to make an economic evaluation of the ongoing value of the contract in comparison to current damage payments

5 **Other provisions**

Foreign power projects present a number of risks that project finance lenders insist be addressed in the PPA Frequently, an omnibus "implementation agreement" must be executed with the host government These risks include expropriation, repatriation of funds, foreign exchange availability, and the structure of commercial laws (such as those governing security interests) Certain of these risks are discussed hereafter in Part V

III FUEL SUPPLY AND TRANSPORTATION AGREEMENTS

A project's fuel supply and transportation agreements should be structured to ensure that the project will have fuel when and as needed to produce electricity as required under the PPA To be financeable, fuel arrangements should adequately satisfy the criteria set forth below

A Quantity of Fuel

The amount of fuel to be supplied to the project must match the amount of fuel the project will need in order to meet the output requirements set forth in the PPA For example, if the PPA requires 600 hours/month availability, the lenders will analyze how much fuel is required to achieve such levels and require the fuel arrangements to be structured to supply fuel in the amounts and at the times required to meet that availability obligation As well, startup fuel must be purchased (and stored, if possible), this is categorized in the plant commissioning cost as "working capital"

B Firm Supply

In addition to confirming that the quantity of fuel contracted for is sufficient, there must be some party to the fuel arrangements that has an absolute obligation to ensure that such fuel in fact is supplied and delivered at least through the term of the project's debt A "fuel manager" is frequently retained to support this obligation

C. Performance by Fuel Supplier/Transporter

Lenders will require that parties supplying and transporting fuel must be capable of performing, and be likely to perform, their contract obligations Therefore, fuel suppliers and transporters should have demonstrated expertise and technology to perform their obligations, as well as sufficient resources to support those obligations In addition, the fuel arrangements should contain appropriate economic incentives For example, a lender to a natural gas-fired project would analyze whether the supplier owned demonstrated gas reserves are sufficient to supply the amounts it had contracted to provide throughout the term of the fuel supply agreement, whether it had a demonstrated capacity to extract gas from such reserves, and, whether it was sufficiently creditworthy to pay liquidated damages for failure to meet such obligations (i e , would such damages truly be an incentive to perform?) Similarly, a coal supplier would need to authenticate proven reserves and a feasible mining plan

Where the fuel supplier or transporter is a government-owned or -controlled entity, and project sponsors cannot contract for back-up supplies with other proven, creditworthy private fuel suppliers and transporters, the fuel arrangements can nevertheless be considered financeable so long as the failure of the government-owned or - controlled entity to supply fuel under the fuel arrangements would not result in a loss of revenue under the PPA Under such circumstances, alternate or replacement fuel supply contracts (or multiple contracts) should be executed

It is advantageous to contract both the supply and transportation of a liquid or solid fuel to a single entity, such that the fuel is shipped on a CIF basis and billing only occurs upon receipt at the Owner's storage facilities Transportation losses are therefore the obligation of the Supplier

D Fuel Quality

The calorific content, grade, and other chemical and heating properties of the fuel contracted for must match the capacities of the boilers or turbine/generators and other equipment to be used in the project, and a fuel supply agreement should specifically state the quality parameters within which all fuel supplied should fall Economic and other incentives are often incorporated into a fuel supply agreement (such as liquidated damages) for failure to supply fuel within such ranges, particularly where the project has no secondary source of back-up supplies, and the fuel purchaser will have the right to refuse receipt of fuel not meeting the quality specifications set forth in the agreement A fuel supply agreement will typically provide for testing of fuel samples to make sure fuel met the applicable quality standards

E Fuel Reserves

To the extent that certain types of disruptions are foreseeable (for example, if a service provider needed to suspend operations on a periodic basis for major maintenance and repairs), and as a matter of prudence in any event, project finance lenders would expect that the fuel arrangements would contain terms for providing, maintaining and operating adequate storage facilities at those points in the route from point of supply to intake at the project likely to experience such disruption (for example, at the project site) containing sufficient amounts of fuel adequate to supply the project during the expected period of disruption

F Revenue Sufficiency

The revenues received by a project should be sufficient to cover the fuel costs for operating such project, while leaving amounts sufficient to pay all other project costs, including debt service To the extent that fuel costs are not fully passed through under the applicable PPA, there should be an appropriate allocation of fuel-cost risk among the fuel suppliers and transporters and the project Additionally, transportation costs and the risk of price increases and fluctuations should be minimized or at least tied to the same price adjustment mechanisms that are used in the PPA It is unlikely that lenders would approve fuel arrangements in which costs are based on potentially risky fuel or operating strategies, such as relying on unhedged market-price fuel supply contracts, or on supply arrangements using fuel that is located at a great distance from the project (which tends to increase both fuel costs as well as the risk of fuel supply disruptions) where transportation systems are either not readily available or do not exist Even in situations where the PPA for a project provides for a pass-through of fuel costs, lenders presume that such costs will be subject to scrutiny and will want to ensure that the prices for fuel, transportation and processing are reasonably related to the services provided and not egregiously inflated in such a manner as to jeopardize their pass-through under the PPA

G Other Lender Risk Assessment Issues

In addition to addressing the primary concerns set forth above, fuel arrangements will typically also need to address, and in some cases provide lender's rights with respect to, certain other issues

1 Term of agreement

Excluding the start-up and testing periods of a project, the term of each of the fuel agreements should be co-extensive with that of the PPA for such project, commencing from the date of commercial operation of the project and extending for the same term as the PPA, and subject to extension to reflect any extension in the PPA

2 Risk of loss/title, Indemnities

Title to, and risk of loss of, fuel supplied and transported should vest with the party with the most effective control of the fuel at each point There should be adequate indemnification provisions with respect to supply and transportation of the fuel, lenders often require that they also be indemnified with respect to fuel-related actions

3 Defaults

A fuel supply or transportation agreement generally should contain customary default and remedy provisions, including rights of parties temporarily to cease performance in the event of certain defaults by other parties, and the right, if such default occurs for an extended period or recurs a specified number of times, to terminate the agreement Lenders will generally want to ensure that, to the extent defaults are capable of cure by the lenders, such remedies and termination rights are subject to lender rights to cure the underlying defaults, and that the lenders (or their designee) can enter into a new contract if the one with the borrower is terminated

4 Insurance

The lenders will want to ensure that liability and casualty insurance with respect to any infrastructure or equipment necessary to fulfill, and dedicated to the purposes of, the fuel arrangements (and particularly where the cost of such infrastructure i e , a dedicated pipeline built to supply the project is included in the fuel costs) is provided in amounts and with coverages consistent with prudent commercial standards and may require that certain types of policies name such lenders as additional insureds The transportation cost component of any fuel pricing should include for 110% of the value of the fuel replacement

5 Force majeure

The lenders will want to ensure that force majeure provisions do not unnecessarily relieve a party from performing its obligations and that the possibility for interruption of fuel supply is limited The Owner should ensure that force majeure under the fuel contract also constitutes force majeure under the PPA

6 Assignments and transfers

Because the project finance analysis of the fuel arrangements for a power project depends so heavily on an agreement of the parties to the arrangements, the lenders will want to ensure that the rights and obligations of the parties under the fuel arrangements would not be able to be transferred or assigned to any other person or entity without the prior written consent of the other party Limited recourse lenders may additionally require that their consent be obtained prior to any such assignment or transfer

IV OPERATIONS AND MAINTENANCE AGREEMENT

The operations and maintenance ("O&M") agreement should be structured so that the power plant and other equipment are properly operated to satisfy PPA performance requirements In the ordinary course O&M costs for a project are typically paid prior to payments to lenders, therefore, financeable O&M arrangements are those that provide a sufficient level of confidence that O&M will be properly performed, while not allowing O&M costs to grow to levels at which repayment of debt will be jeopardized Such financeable O&M arrangements for a power project would be those that adequately satisfy the criteria set forth below

A Characteristics of Operator

O&M practices can determine whether a project achieves projected performance levels even in plants with sound design and construction Therefore, plant operators, whether the project sponsors themselves or third-party operators, should have proven ability to use the equipment and technology contemplated for the project Because determining such ability may be difficult, lenders will generally assess whether the operator has employees with extensive relevant experience and a favorable performance record at comparable facilities or with equivalent equipment

Financeable O&M arrangements will also avoid giving the operator an incentive to maximize short-term economic gains at the expense of long-term plant performance, by providing appropriate economic incentives to meet certain guaranteed operating targets For example, the O&M arrangements could provide for payment of a base fee to the operator, which would be adjusted through deduction of certain amounts for failure by the operator to cause the plant to meet a range of specified operating targets (such as guaranteed heat rate or availability levels), and by the awarding of bonuses for exceeding (i e , improving) specified operating targets, or for keeping costs below a specified percentage level of budgeted amounts during a given operating period

B Operation and Maintenance Obligations

Lenders will want assurances that the power plant will be operated and maintained so that operating levels (heat rate, electricity output, capacity availability) specified in the PPA are met Financeable O&M arrangements will contain a schedule of routine and major maintenance that will enable the plant to meet such PPA-specified operating levels In addition, the O&M arrangements should set forth a description of the scope of work for which the operator will responsible that is comprehensively detailed to ensure that the operator will meet such targets

C Operating Costs

The revenues received by a project must be sufficient to cover the costs for operating such project, while leaving amounts sufficient to pay all other project costs, including the principal and interest on the project's debt O&M arrangements should therefore seek to limit O&M costs through an appropriate allocation of O&M-cost risk between the operator and the project, as well as controls to limit the increase of O&M costs from those levels provided for in the economic models for the project Generally, O&M budgets, as well as certain levels and categories of changes in costs, would be subject to outside review and approval either by an

independent engineer, or jointly by the lenders and the project sponsors

D Project Contracts

The O&M arrangements should provide for the performance by the operator of all obligations under other project contracts, including the PPA and fuel arrangements, that are necessary to operate the project They also should require the operator to perform other operational duties, such as the responsibility under debt instruments to provide periodic reports concerning the operational status of the project

E Other Lender Risk Assessment Issues

As with the fuel arrangements, O&M arrangements will typically also need to provide that the default and remedy provisions include appropriate lender cure rights, that the operator is required to provide adequate liability and casualty insurance naming the lenders as additional insureds, and, that any force majeure provisions do not unnecessarily relieve the operator of performing its obligations If an unrelated party is the operator, the term of the O&M agreement generally need not correspond to the term of the PPA, if, however, the operator is a related entity (and therefore receiving a lower fee than would be paid to a third party), lenders will seek to ensure that such lower fees are available for at least the term of the debt

V OTHER STRUCTURAL ISSUES

Lenders to overseas independent power projects will seek to ensure that certain other risks, including those identified below, have been addressed satisfactorily, often through direct arrangements with the government of the host country As indicated previously, many of these issues may be addressed through an implementation agreement directly negotiated between the project sponsors and the government of the host country in which the project is to be located Certain risks (such as expropriation and currency convertibility risks) also can be addressed through a political risk insurance provided by OPIC, IFC, and similar entities

A Change in Law

Lenders will want assurances that changes in the laws of the host country that cause the project to be unable to fulfill its obligations under the PPA or other project contracts will not result in penalties or loss of income under the PPA Change in law issues can be addressed through the payment of damages by the government or another creditworthy entity backing up the project contract counterparty, and/or through the suspension of the project's obligations under affected project contracts Where changes in law are of such a nature that completion or continuation of the project is no longer feasible, the project should be allowed to terminate its agreements and receive liquidated damages Lenders will generally require that such liquidated damages amounts are at least sufficient to repay the costs of the non-recourse debt

B Expropriation

Lenders will want to ensure that the consequences to the lenders of expropriation are adequately limited through payment of liquidated damages in the event that a government entity expropriates the Ownership or control of the special purpose project entity that owns or runs the project, or any assets relating to or delivered from the project, the Owner, any of the lenders or any contractor to the project Certain types of expropriations that may be characterized as government defaults (i e , expropriations by the central government), as opposed to as "political events" (i e , expropriations by a local government that may not be under the control of the central government), would usually result in higher damages being paid by the central government

C Convertibility and Exchange Rates

Where payments under the PPA are not denominated in the same currency in which the lenders have provided project debt, lenders will require that there be a party (often the utility to which power is to be sold under the PPA) contractually obligated to equalize the valuation local currency amounts so as to ensure that fluctuations in exchange rates do not result in the project's receiving amounts of local currency that are insufficient to meet debt repayment obligations In addition, the lenders will want government assurances that the project will be able to exchange local currency for other currencies when and as needed to make required payments to lenders and other project vendors or contractors

Failing the ability to provide these assurances, the Owner may be obligated to purchase hedges against local currency revaluations in order to meet the lenders requirements

D Dispute Resolution, Choice of Law and Forum

In countries where court adjudication typically may be subject to lengthy delays and procedural difficulties, major project agreements should provide for arbitration or other alternative dispute resolution through an internationally accepted, neutral forum In addition, the law and forum chosen for adjudication of disputes under the PPA and other major project contracts should not provide an undue advantage to the host government or parastatal project contract counterparties Generally, lenders will approve a choice of law and forum that results in the application of a body of law to such disputes that they consider commercially reasonable and neutral, such as the law of England or of New York, and a location for dispute resolution where adjudicators are familiar with the law that will be applied and that is convenient to the parties without advantaging any one party

E Government Guarantee, Waiver of Sovereign Immunity

Where the parties to the PPA and other major project contracts will be government-owned or -controlled entities or other parastatals, lenders will generally require that the host government provide a direct guarantee of such contract counterparty's obligations under such agreements In addition, where government-owned or -controlled companies or other parastatal entities are parties to the PPA and other major project contracts, or where the host government otherwise acts in a commercial capacity, lenders will usually require that the parastatal entities and the host country government waive sovereign immunity against lawsuits with respect to such agreements and actions

It must be realized that this arrangement is nearly always resisted by a governmental entity

F Commercial Law Issues

In addition to the other, sovereignty-related risks identified above, lenders will also analyze the risks associated with the existing commercial law system in the host country Specifically, lenders will assess whether and to what extent there are restrictions on foreign investment and lending, and if there are any specific restrictions with respect to power projects The existence of import restrictions and limits on the maintenance of off-shore bank accounts or foreign currency reserves will also be of particular concern in analyzing the viability of the project and its ability to repay non-recourse debt Lenders may also require additional guarantees or other compensating structures to the extent that the host country's commercial law does not provide for clear enforceability of contracts, or for the creation and enforcement of liens on real property and other assets of the project

G Relationships Between the Parties

As a general rule, the diverse parties' relationships are arms-length, with no party being an agent, partner or conflict of interest entity to another In certain countries these relationships become so intertwined as to blur the lines of demarcation Asian ECA's are accustomed to dealing on this basis, lenders generally discourage intimations of possible inside dealing

H Design and Construction Contract

The design and construction contract is initiated during the development phase of the project It is the Owner's intent to provide a Scope of Work with sufficient technical detail so that contractors skilled in the art of designing and constructing power plants can offer competitive bids The contract terms are usually lump sum, turnkey, performance warranteed, liquidated damages, date certain The contract includes design, engineering, procurement, construction, startup and commissioning, and is usually referred to as an "EPC" contract The Contractor must demonstrate financial stability, a history of successful performance with no defaults and a willingness to take some risks in order to share in the project's successful completion

Establishment of the project capital cost and selection of the Contractor constitutes the most time-consuming portion of the development phase of any Project

B 2 Economic and Financial Rates of Return

Two methodologies have been utilized to assess the economic and financial attributes of the proposed Yerevan Combined Cycle Plant The first methodology examines the Economic Internal Rate of Return (EIRR) associated with the benefits to Armenia derived from the proposed Yerevan Combined Cycle Plant versus the "Without Project" scenario The second methodology examines electric tariffs and their impact on the project's Financial Internal Rate of Return (FIRR)

In addition, two major variants in financing terms were examined The first one assumes that the project will be financed through limited or non-recourse project finance This variant examines the project as if it were structured as an Independent Power Project (IPP) The second variant assumes that the project will be financed through a World Bank loan This variant uses a much lower interest rate, a longer loan term and a grace period on repayment of principal

The following baseline assumptions and modeling data are common to both of the analysis methodologies Other assumptions which are unique to the assessment methodologies are described later

<u>Common Base line Economic/Financial Analysis Input Data and Assumptions</u>

(1) All costs are in constant 1998$

(2) The construction schedule for the Yerevan Combined Cycle Plant is 30 months and the commercial operation date is January 1, 2004

(3) The as-fired price of natural gas is 8 81$/Gcal (LHV basis) The as-fired price of mazut is 13 11$/Gcal (LHV basis) These prices were provided to Burns and Roe by correspondence from the Armenian office dated August 5, 1998

(4) The total project cost is the Combined Cycle Turnkey Contract's cost and Owner's costs Capital costs and investment cash flows for the purpose of the economic and financial analyses are taken from the Capital Cost Estimate Summary (See Section A 3a) Escalation has not been considered as this is a constant 1998$ analysis

(6) Estimated Operating and Maintenance Costs for the Yerevan Combined Cycle Plant consists of fixed and variable components of 14 03 $/kW/yr and 0 87 $/MWh, respectively The basis for the O&M estimate is detailed in Section A 3c

(7) The Yerevan Combined Cycle Plant will operate at an average annual capacity factor of 80%

(8) Transmission line losses have not been taken into account and the tariffs used in the feasibility study are assumed to be the tariff for the new Yerevan Combined Cycle Plant at the plant meters

(9) No Value Added Tax (VAT) has been assumed for fuel purchases, electricity generated, etc

(10) Plant capacity and heat rate degradation over time have not been considered in this analysis, as their effects on overall project financial projections will be negligible

In addition to base case analyses, various sensitivity analyses have been performed to examine the affects of varying key parameters on the economic/financial results Specific sensitivity analyses performed are discussed hereinafter

B 2 1 Economic Analysis-Cost/Benefits

An economic assessment of costs and benefits associated with the proposed Yerevan Combined Cycle Plant was performed in order to quantify the EIRR The proposed project is expected to yield a number of benefits relative to the "Without Project" scenario, including

(a) Fuel Savings - The high efficiency of the proposed Yerevan Combined Cycle Plant relative to the poor performance of the existing thermal generating units in Armenia will provide significant savings in primary fuel costs

(b) Reduction in Air Pollution Emissions - The high conversion efficiency associated with the Yerevan Combined Cycle Plant will result in displacing mazut fired generations at existing plants This in turn will result in reduced emissions of SO_x, NO_x, CO_2, and particulates

(c) Reduction in Repair and Maintenance Cost - The poor condition, design and age of existing Yerevan thermal plants will require significant capital expenditure for plant maintenance and repair The addition of the new Yerevan Combined Cycle Plant will enable Yerevan to retire older generating plants and thereby forego otherwise necessary maintenance

The economic evaluation of costs and benefits performed herein takes into account only the first two benefits (a) and (b) above While reducing repair and maintenance costs represent real benefits, quantification in economic terms is subject to considerable uncertainty

The economic cost/benefit analysis is based on the following methodology and Base Case assumption

1 Project Cost - Project Cost is taken to be the total base project cost inclusive of the Combined Cycle Turnkey Contract's cost and Owner's costs

2 Fuel Benefit - The fuel benefit is taken as the difference between the fuel costs associated with operation of the Yerevan Combined Cycle Plant at an 80% capacity factor, and the fuel cost which would otherwise be incurred in the "Without Project" scenario That is, the amount of fuel calculated in each scenario is the fuel required for an equivalent number of kWhrs generated The "Without Project" scenario assumes that two of the existing Yerevan

Plants would operate at 150 MW each with a 70% capacity factor and, that the balance of production displaced by the Yerevan Combined Cycle Plant is derived from other thermal plants in the grid system with heat rates similar to the existing Yerevan Plants It is assumed that the existing plants will fire gas/mazut whereas the Yerevan Combined Cycle Plant will fire natural gas for the majority of any operating year

3 Environmental Benefits - The new Yerevan Combined Cycle Plant will fire natural gas and will utilize state of the art low NO_x combustors The evaluation of the environmental benefits is based on reductions in annual emissions of NO_x, CO_2, SO_2, and particulates resulting from the new Yerevan Plant compared with that of the existing thermal plants firing gas/mazut The economic benefits are based on valuation factors of 250 $/ton for NO_x, 7 $/ton for CO_2, 400$/ton for SO_2 and 100$/ton for particulates These values were taken from the Least Cost Power Investment Program for Armenia, Final Report dated November 1996 prepared by Lahmeyer International

4 Project Life – The project life has been assumed at 25 years for the IPP Finance Variant and 35 Years for the World Bank Finance Variant

B 2 1 1 Summary of Results – IPP Finance Variant (Tables B 2 1 –B 2 10)

The results of the Base Case analysis, which are presented on Table B 2-1, indicate an EIRR of 14 8% The results of sensitivity analysis to variations in Project Cost and fuel prices are presented in Tables B 2-2 to B 2-9 and summarized in Table B 2-10 As can be seen from Table B 2-10, EIRR's are found to range from 13 0 % to 16 3 % These results are considered reasonably attractive EIRR's particularly when one considers the benefit associated with reductions in repair and maintenance costs have not been included

B 2 1 2 Summary of Results – World Bank Variant (Tables B 2 21 –B 2 30)

The results of the Base Case analysis, which are presented on Table B 2-21, indicate an EIRR of 15 1% The results of sensitivity analysis to variations in Project Cost and fuel prices are presented in Tables B 2-22 to B 2-29 and summarized in Table B 2-30 As can be seen from Table B 2-30, EIRR's are found to range from 13 4 % to 16 6 % Again, these results are considered reasonably attractive EIRR's particularly when one considers the benefit associated with reductions in repair and maintenance costs have not been included

These results are only marginally better than the IPP Finance variant because the only difference is that the project life has been increase to 35 years

B 2 2 Financial Analysis - Tariff Assessment

The Financial Analysis examines tariffs and their affect on project cash flow The tariffs used in the analysis are assumed to be the tariff for the new Yerevan Combined Cycle Plant at the plant meters

Referring to table B 2-11, the project cash flow is defined as annual revenues from electricity sales minus capital expenses (EPC costs and Owner's costs) minus operating expenses minus income taxes The interest and principal payments shown are for purposes of calculating income taxes The Financial Internal Rate of Return (FIRR) is an indication of how attractive the Project's cash flow stream will be to potential investors as well as potential lending institutions Determining the threshold FIRR value for a project to be attractive is dependent upon many variables that are difficult to determine For the IPP Finance variant, considering the current posture of investors in emerging market countries, an FIRR value of at least 16% indicates a reasonably attractive project For the World Bank Finance variant, FIRR values below 10% may still be considered acceptable

Referring to table B 2-11, the Debt Service Coverage (DSC) ratio is defined as annual revenues from electricity sales minus operating expenses divided by the loan's principal and interest payments The DSC ratio is an indication of the project's ability to repay the loan For the IPP Finance variant (a non-recourse or limited recourse project finance loan), the DSC ratio should not fall below a value of 1 3 to 1 4 in any given year However, values below 1 3 are often encountered in the first year or two of an IPP project's commercial operation For the World Bank Finance variant, the same guidelines generally apply In no case should a project's DSC ratio be below 1 0 in any year

Key assumptions made in this analysis, in addition to those previously stated, include

1 The project is 100 % debt financed

2 For the IPP Finance variant, loan repayment assumes a 12 % annual interest rate, a 12-year term, no principal repayment during construction, and uniform principal payments during the 12-year loan period

   For the World Bank Finance variant, loan repayment assumes a 4 % annual interest rate, a 35-year term, no principal repayment during construction, a 10-year grace period (starting from the commercial operation date) on principal repayment and uniform principal payments during the balance of the 35-year loan period

3 For the IPP Finance variant, straight line depreciation over a 25 year plant life

   For the World Bank Finance variant, straight line depreciation over a 35 year plant life

4 An income tax rate of 25 % on net profits with a 2 year grace period on income taxes (the first two years of operation) This is permitted by the Armenian tax codes

5 Levelized one part tariff during the plant operating life

B 2 2 1 Summary of Results– IPP Finance Variant (Tables B 2 11 –B 2 20)

Table B 2-11 presents the results of the financial analysis based on revenues from the output of the Yerevan Combined Cycle Plant at a project tariff of $0 045/kWh As can be seen from this table, this tariff results in a project FIRR of 22 1% which is an acceptable result The resulting DSC ratio of 1 3 in the first year of operation is marginally acceptable

Table B 2-20 is the summary of the various sensitivity cases As can be seen, decreasing the tariff to $0 040/kWh yields an acceptable FIRR of 18 5%, but the DSC ratios are too low Further decreases yield even worse DSC ratios Therefore, the conclusion drawn is that the tariff rate for this project would need to be in the $0 045/kWh range in order to be funded through non-recourse or limited recourse project finance

Sensitivity of the Base Case to (i) 10 % higher natural gas prices and (ii) 10 % higher plant capital costs are presented in Tables B 2-16 and B 2-18, and summarized in Table B 2-20 As can be seen, 10 % higher natural gas prices and 10 % higher capital costs will result in FIRR's of 20 4 % and 21 0 % respectively, which are acceptable However, DSC ratios in both cases fall to 1 2 in the first two years which may be problematic for lending institutions

The reported uniform Armenian tariff at this date is $0 027/kWh based on the contributions of all electric generating facilities in the country Therefore, a project with a tariff in the $0 045/kWh range may not be acceptable

B 2 2 2 Summary of Results– World Bank Finance Variant (Tables B 2 31 –B 2 40)

Table B 2-31 presents the results of the financial analysis based on revenues from the output of the Yerevan Combined Cycle Plant at a project tariff of $0 03/kWh As can be seen from this table, this tariff results in a project FIRR of 10 4% which is an acceptable result The resulting DSC ratios of 1 6 – 3 1 are also acceptable

Table B 2-40 is the summary of the various sensitivity cases As can be seen, decreasing the tariff to $0 025/kWh yields a low FIRR of 5 9%, and unacceptable DSC ratios as low as 0 9 Increasing the tariff to $0 0275/kWh yields a marginally acceptable FIRR of 8 3 % but an unacceptable DSC ratio of 1 2 during the first year of principal payments Therefore, the conclusion drawn is that the tariff rate for this project would need to be in the $0 03/kWh range for World Bank financing

Sensitivity of the Base Case to (i) 10 % higher natural gas prices and (ii) 10 % higher plant capital costs are presented in Tables B 2-36 and B 2-38, and summarized in Table B 2-40 As can be seen, 10 % higher natural gas prices and 10 % higher capital costs will result in FIRR's of 9 5 % and 9 1 % respectively, which are acceptable DSC ratios in both cases are also acceptable

Table B.2 - 20

Sensitivity Cases

Financial Analysis

Parameter	Value	FIRR (%)	DSC	Table
Base Case - Tariff = $0 045/kWhr - Capital Cost = $237 5 MM - Gas Price = $8 81/Gcal	-	22 1	1 3 - 2 9	B 2-11
Tariff	$0 030 /kWhr	10 3	0 6 - 1 3	B 2-12
	$0 035 /kWhr	14 6	0 8 - 1 8	B 2-13
	$0 040 /kWhr	18 5	1 0 - 2 3	B 2-14
	$0 050 /kWhr	25 6	1 5 - 3 4	B 2-15
Total Capital Cost	+10%	20 4	1 2 - 2 6	B 2-16
	-10%	24 2	1 4 - 3 2	B 2-17
Gas Price	+10%	21 0	1 2 - 2 7	B 2-18
	-10%	23 2	1 4 - 3 1	B 2-19

Table B.2 - 40

Sensitivity Cases

Financial Analysis

Parameter	Value	FIRR (%)	DSC	Table
Base Case - Tariff = $0 03/kWhr - Capital Cost = $237 5 MM - Gas Price = $8 81/Gcal	-	10 4	1 6 - 3 1	B 2-31
Tariff	$0 0250 /kWhr	5 9	0 9 - 1 8	B 2-32
	$0 0275 /kWhr	8 3	1 2 - 2 4	B 2-33
	$0 0325 /kWhr	12 5	1 9 - 3 8	B 2-34
	$0 0350 /kWhr	14 4	2 2 - 4 4	B 2-35
Total Capital Cost	+10%	9 5	1 4 - 2 8	B 2-36
	-10%	11 5	1 7 - 3 4	B 2-37
Gas Price	+10%	9 1	1 4 - 2 7	B 2-38
	-10%	11 7	1 8 - 3 5	B 2-39

B 3 Risk Analysis

Project risk can be separated into three categories

- Physical and technical
- Economic and financial
- Political

Risk mitigation strategies and actions associated with the development of the new combined Cycle Gas Turbine (CCGT) project can be implemented in accordance with various protocols, agreed in advance between the Owner and the relevant Governmental ministries

A Physical and Technical Risk

The Project site is within the existing Yerevan CHP plant area The area of primary physical risk is the seismic rating corresponding to the highest degree of activity on the Richter scale or Mercalli scale Consequently all new foundations and structures must be designed accordingly

Adjacent structures to the Project site, including the existing outdoor switchyard, must be evaluated for resistance to seismic stress and reinforced where necessary Remote structures whose integrity impacts directly on the CCGT plant operation (such as the cooling tower and its appurtenances), similarly must be assessed An evaluation must be prepared to determine the nature and extent, and consequent cost implications of these reinforcements

Technical risk analysis relates entirely to the certainty of performance of the CCGT plant This technology is in advanced stages of reliability as is evidenced by literally thousands of installations worldwide Further, usage of natural gas backed up by No 2 diesel oil as the fuels of choice, permits the gas turbines to operate at their maximum design conditions with consequent optimization of performance efficiency in the combined cycle mode Plant availabilities customarily approach 95% for well-maintained installations

Physical and technical risks are mitigated by selection of highly reliable equipment installed in an area which has been constructed for maximum seismic load resistance

B Economic and Financial Risk
(This section is extracted from World Bank Report No 17018-AM, dated Oct 28, 1997)

Compared with countries with a less volatile recent history and a longer track record of independence and reforms, the risk mitigation instruments available to Armenia are quite limited Therefore, it is most likely that specific transactions could only be

financed by combining the available instruments in a creative manner The main available instruments, and the scope of their application is discussed below

- Export Credit Guarantees and/or Financing

  Financing provided or guaranteed by bilateral Export Credit Agencies (ECAs) is most commonly used in transactions involving the import of large amounts of capital goods This financing is provided from the exporting country to support exports The guaranteed financing usually covers up to 85 percent of the cost of the capital goods exported from the home country of the ECA Unfortunately, due to the situation in the region, all ECAs are presently closed for business in Armenia While they are likely to start opening for short-term business in the near future, this may not be the case for medium and long-term financing which would be required for most transactions in the power sector Nevertheless, if a specific transaction were to involve a significant amount of exports from one country, it would be worthwhile to explore the availability of bilateral ECA coverage from that country on a case-by-case basis

- Political Risk Insurance

  Off-the-shelf political risk insurance for foreign direct investment is available from the Multilateral Investment Guarantee Agency (MIGA), a member of the World Bank Group In addition, a limited number of countries have a bilateral agency offering the same product, the largest of which is the Overseas Private Investment Corporation (OPIC), a U S agency This type of insurance covers equity investments and loans which are made in conjunction with equity investment Coverage is limited to "classic" political risks inconvertibility and inability to transfer, expropriation, war and civil disturbance, and for some agencies also breach of contract Both MIGA and OPIC are open for business in Armenia

- Loan Guarantees

  Apart from straightforward Government guarantees - which are unlikely to provide sufficient comfort at this time - there are two main types of loan guarantees which could be used (I) "B-loans", which are commercial loans benefiting from the involvement of a multilateral institute (a so-called "A-loan" from IFC or EBRD), which involvement creates a perceived "umbrella" as commercial financiers generally expect that loans involving these institutions will not be defaulted on, and (ii) Government guarantees which are enhanced by a full financial guarantee of the World Bank Given Armenia's limited credit worthiness, the scope for an A-loan/B-loan structure may be limited Nevertheless, it could provide part of the financing for a transaction if investors were comfortable with the informal "umbrella" coverage The scope for government/World Bank guarantees is also constrained by credit worthiness considerations, but more importantly by its

potential cost to the Government Therefore, this instrument should be applied only as a last resort in order to limit Government (and World Bank) exposure

- Fuel Supply

In the case of a thermal power plant, the first risk investors would worry about is the reliability of fuel supply The lack of fuel during the height of the blockade has been widely publicized, and the frequent payment arrears for gas delivered by Turkmenistan exacerbate the perception of risk Initial feedback from investors indicates that they are unlikely to be interested in any deal without a guarantee against this risk

However, rather than a straightforward guarantee of fuel supply - which would leave contracting responsibility, and all the associated risks, with the Government - it might be possible to create a structure where the investor would enter into a direct contract with a foreign gas supplier while the Government would guarantee only against the risk of contract frustration as a consequence of carefully defined political circumstances This would limit the Government's exposure, while giving the investor the benefit of being able to do their own contracting, possibly at more favorable terms than the Government

- Domestic Electric Power Sales

For domestic sales, the fact that Armenergo may operate as a state-owned single buyer and seller of power will increase the perceived risk on the part of the investor This risk could easily be mitigated by means of a Government/World Bank guaranteed long-term PPA This is a potentially expensive structure A preferable option would be to rely on a structure of back-to-back purchase and sale contracts so that the generator would receive directly his/her share of the proceeds of a sale by Armenergo to a distribution company In this case, the single buyer assumes no market risks and payments under PPAs with private generators are guaranteed by revenues from sale contracts with selected distribution companies The single buyer is in fact procuring power on behalf of the distribution companies It would be essential to ensure that Armenergo would be a financially healthy company with strong management at arm's length from the government Even with all these elements in place, however, it is quite likely that investors would want to see a guarantee of Armenergo's performance under its contractual obligations It should be noted that generators could contract directly with the distribution company, subject to approval by the Energy commission As the criteria for approval are not yet clear, this option will not yet provide effective comfort to investors This may change if clear criteria are spelled out in secondary legislation As these obligations would be simply those of a transmission company (rather than a long term PPA), this guarantee would result in significantly less Government exposure than a guarantee of Armenergo's obligations under a long term PPA

In a competitive power pool with a market administrator controlled by the state, private generators will perceive higher market risks associated with volatile spot prices and deficiencies in the application of transparent and stable rules for the operation of the power pool These market risks can be mitigated by bilateral power contracts with distribution companies or large consumers, a good track record in the application of clear and stable market rules and good governance mechanisms of the power pool

Another element of perceived risk for domestic sales is the risk associated with the collection performance of the distribution companies The structure of back-to-back contracts outlined above does not provide sufficient comfort if the distribution company is not capable - or not allowed - to collect effectively and at an economic price The same is true in the case of direct contracting between a generation company and the distribution company The risk is really at the heart of the problems in the power sector While it is theoretically possible to mitigate this risk by means of a guarantee, this would be highly undesirable if the problem were not solved in substance The guarantee would simply get called, with high immediate costs to the Government

The better option would be to continue on the present track allow distribution companies to improve collections, raise prices to economic levels, and build a track record of solid financial performance In addition, as soon as possible allow investors in generation to contract directly with distribution companies, so that they can select those companies which they perceive as the strongest This will in turn provide incentives for the other distribution companies to improve their performance

C Political Risk

For electric power exports, investors will definitely want to enter into direct contracts with their buyers The Energy Law permits this, but stipulates that export transactions require a license from the Energy commission This allows the commission to prevent export in case there are insufficient capacity to meet domestic demand This licensing requirement may create a perceived risk on the part of the investor as a consequence of the fear that the regulator might use it to prevent export transactions for other reasons Thus, the investor may require a guarantee against the risk of the Energy commission unreasonably withholding or withdrawing an export license In addition, the investor may require a guarantee of Armenergo's performance in transmitting the power to the border (similar to the case of domestic sales discussed above) The transmission risk on the other side of the border would usually be the Buyer's risk

Investors will worry about classic political risk Given the cross-border elements of power generation transactions in Armenia, these risks will be of even greater concern to

investors in generation Risk mitigation could be done through a combination of off-the-shelf political risk insurance and Government/World Bank Guarantees

The risks are inconvertibility or inability to transfer currency, expropriation (in this case mainly associated with possible interference with repatriation of profits), and war and civil disturbance Under present circumstances in Armenia, it seems unlikely that investors in the power sector would be prepared to take these risks without acceptable mitigation through guarantees

Based upon input from a few potential investors, the documents should state that the Government - supported by the World Bank - is prepared to offer guarantees for certain non-commercial risks Bidders should be invited to indicate in their proposals which risks they would want to have guaranteed The document should say that precise risk coverage would be developed during negotiations between the winning bidder, the Government and the World Bank Bidders could be invited to contact the Government and/or the World Bank for questions on the potential scope of the guarantees

It may, however, be possible to mitigate these risks by buying "off-the shelf" political risk insurance from MIGA or in some cases from a bilateral insurance agency While most bilateral agencies are not yet open for business in Armenia, it may be possible to obtain insurance for a transaction involving a reputable investor with very strong experience in the power sector The U S agency OPIC has already indicated its interest in supporting such a transaction, and others might follow Off-the-shelf insurance would be a good solution, as this may be readily available and does not require a Government guarantee

Annex 1 Mitigating Risks Through More Effective Arbitration Procedures

1 One essential element in risk mitigation for foreign investors is the need for effective arbitration provisions Foreign investors are generally not prepared to rely on the local courts to arbitrate in a conflict they might have with their local contract partner, especially if this partner is a public entity This can be solved effectively by agreeing in the transaction contract (license and/or sale contract or concession agreement) to binding international arbitration in a "neutral" country, and submitting the contract to the exclusive jurisdiction of the courts of that (or sometimes another "neutral") country It is very important for investor confidence that these arrangements be explicitly allowed in the laws of the country where the investment takes place

2 It appears that Armenian law presently does not allow arbitration provisions as outlined above in case the Armenian party to the transaction is a public entity (e g , the Energy commission, state-owned transmission company) This apparent prohibition is expected to be removed in 1998 in the context of the revision of the Civil code However, in any case, Armenian law allows this type of arbitration provisions only by default, i e , because they are not explicitly prohibited In order to reinforce investor confidence, it would be important to amend the Law on Foreign Investment to include explicit provisions on the legality of foreign arbitration and the jurisdiction of foreign courts over transactions involving Armenian parties

3 The Energy Law stipulates "The legal acts of the Energy commission, except the decisions with regard to the tariffs, can be appealed to the court " (Article 29) It is unclear whether this effectively prohibits an international arbitration provision to protect the rights of foreign investors under the license If this were indeed the case, it would be important to find a legal way to address this problem, given the paramount importance of credible arbitration for investors' rights and for the credibility of possible guarantees In many cases, a call on the guarantee would not lead to a straightforward admission of liability by the relevant authority, but to a dispute which often ends up being solved in arbitration Hence, the arbitration provision has a direct impact on the credibility of the guarantee

4 The best solution to this problem would be to include a specific provision in the foreign Investment Law allowing a covenant on international arbitration between a foreign investor and the regulator Another way of addressing the problem might be to include solid arbitration provisions in the contract of sale (or concession contract), which provisions would extend to contract frustration by the regulator A third solution would be to rely on a bilateral Investment Protection Agreement (IPA) - which takes precedence over the Energy Law - to include in the license arbitration provisions according to the relevant IPA Armenia has concluded 26 bilateral foreign Investment Protection agreements, most of which include provisions on arbitration These agreements have the status of international treaties, and as such supersede Armenian law Nevertheless, it would be preferable to extend the same level of protection to all foreign investors by including the appropriate

provisions in the foreign Investment Law Obviously, this would work only in those cases where the investor's home country had an IPA with Armenia

APPENDIX A

Summary of Armenian Tax System

APPENDIX B

Financial Tables

SUMMARY OF ARMENIAN TAX SYSTEM

The following taxes and payments are in effect in Armenia

Taxes on income, profits and property

profit tax	• on profit of legal entities and enterprises without the status of legal entity,
income tax	• on income of individuals,
property tax	• on certain types of property

Taxes and duties on goods and services

excise tax	• on specified products,
value added tax	• on the circulation of products and services,
import duty	• on goods imported to or exported from Armenia

Other taxes, fees and duties

state duties	• for legal and other services,
land tax	• on land,
road fees	• for the use of roads, and for advertising of certain type
natural preservation tax	• for the use of natural resources and for environment

Taxes on income, profits and property

129

Income Tax

Tax is a tax on a individual's annual income It is levied at a progressive rate Personal circumstances are taken into account when making the assessment of the amount of tax to be paid, and certain expenses are tax-deductible There are three tax rates 15, 25 and 30 percent

Profit Tax

Profit Tax is levied on the taxable profit of legal entities, enterprises without the status of legal entity and organisations Partnerships are also liable for the profit tax An important feature of the profit tax is so called the participation exemption, which means that a company receiving dividends does not have to pay profit tax on dividends since the tax has been already paid by the company distributing the dividends There are two tax rates the rate for the first 7 million Dram of taxable profit is 15%, the rate for the remaining amount of taxable profit is 25%

Property Tax

Property tax is paid by the owners of the buildings and vehicles on the value of that property The rates for the buildings varies from 0 to 0 8 per cent and for vehicles from drams 50 to 150 per horse-power

Taxes and duties on goods and services

Excise Tax

Excise tax is levied on certain consumer goods, i e petrol and some other mineral oils, tobacco products, and alcohol and alcoholic beverages The tax is paid by all manufacturers and importers of the goods liable to excise tax The excise tax, like VAT, is included in the price consumers pay for these goods and it has the same appliance both for foreign and domestic persons The excise tax rates are ranged from 15 per cent to 200 per cent

Value added tax (VAT)

VAT is general consumer tax included in the price consumers pay for goods and services (including imported ones) Consumers pay this tax indirectly The VAT paid by one company to the other may be reclaimed from the VAT to be paid to the Tax and Customs Administration There are two rates for VAT general rate of 20%, and zero rate applicable mainly to exported goods and services

Import duty

Import duty is levied on imported goods This usually amounts to a percentage of the value of the goods being imported There are two duty rates 10% and zero rate The latter is applicable to goods exported from Armenia

The general law on taxes

The Law "On Taxes" adopted on April 14, 1997, effective from May 12, 1997, replaced the former "Law on Taxes and Duties", determines the general taxation principles in Armenia

The Law also defines the concepts of taxes in the Republic of Armenia, the types of taxes, the objects of taxation

136

and taxpayers, the order of the settlement of controversies, responsibility for the violation of the tax legislation

Taxpayers

Legal entities, enterprises without legal status and individuals are taxpayers in the Republic of Armenia

Taxes are paid to the state or the local budgets of the Republic of Armenia

Types of taxes

- Income tax
- Profit tax
- VAT
- Excise tax
- Property tax
- Land tax

Taxpayers rights

Taxpayers have the right to do the following

- familiarise themselves with the acts regarding the inspection of their activities,
- present the tax administration bodies explanations regarding the calculation and payment-of taxes and in response to inspection results

Taxpayers obligations

Taxpayers are obliged to do the following

- calculate the amount of tax for the relevant accounting period (except property tax) In some cases tax obligation is transferred to the tax agent (particularly, in case of personal income tax) Tax agent may be a legal entity, enterprise without legal status and sole entrepreneur,
- provide the Tax Administration bodies with the documents and information on calculating and paying taxes as specified by legislation,
- present those documents which confirm their right to any tax privileges,
- make appropriate corrections to accounting calculations for any amount of hidden or reduced taxable object which was discovered as a result of the Tax Administration's inspection,
- present a written explanation describing why he/she did not sign the act in the event that the taxpayer does not agree with the facts of the Tax Administration inspection

Taxpayers accept administrative responsibility for doing the following

- not calculating income or calculating it with gross violations of the specified procedure,
- not presenting a written statement, not presenting the statement on time, or for using false information in the

131

statement,

- concealing income (profit) or concealing the amounts of other taxable objects,
- refusing to pay taxes, or avoiding paying taxes

Tax privileges

The following tax privileges can be established by the law

- tax exemption
- reduction of the object of taxation
- reduction of the tax
- term privileges of tax calculation and payment
- reduction of tax rate
- compensations to the taxpayer

Unilateral double taxation avoidance

The amount of income (profit) received by taxpayer outside Armenia as well as the value of the property situated therein shall be included to the total amount of taxable income (profit) or to the value of property situated in Armenia and taken into account at the calculation of amount of taxes

The income or property tax paid by Armenian taxpayer in foreign countries Armenia shall be deducted from the income or capital tax payable in Armenia, thereby, the reduced amounts can not exceed the tax amount, payable in the Republic of Armenia from the income (profit) received in foreign countries

PROFIT TAX

In general

The tax year is the calendar year

The Law "On Profit Tax" adopted on 30 September 1997 and effective from 1 January 1998, replaced the former "Law on Profit Tax"

Taxpayers

Profit tax payers in Armenia shall be residents and non-residents of Armenia

a) Residents of Armenia are the legal persons and the enterprises without legal person status created in Armenia (state registered)

b) Non-residents of Armenia are the legal persons and the enterprises without legal person status created in other countries as well as international organisations, and legal persons or enterprises without legal person status created by them outside Armenia

Residents of Armenia are taxable on their taxable profits from all sources world-wide Armenian legal entities, including those with foreign participation are taxable under the profit tax law on their taxable profits from all sources world-wide

Foreign legal entities operating through representations in Armenia are taxable on the taxable profits derived by the representations in Armenia as well as on income independently received from Armenian sources

Foreign legal entities receiving income from Armenian sources other than through a representation (for example, recipients of loan interest, dividends, royalties, rentals, service fees and management fees) are subject to tax on the gross amount of such income

The object of taxation

Object of taxation for residents shall be the taxable profit derived in Armenia and outside

Object of taxation for non-residents shall be taxable profit derived from Armenian sources

Determination of taxable profit

The taxable profit is positive difference between gross income of taxpayer and deductions, envisaged by the present Law

Foreign legal entities may pay taxes either in drams (the Armenian national currency) or in hard currency

Elements not considered as income

Investments of the participants (shareholders, stockholders, members) in the ownership capital, positive difference between allocation price and face value of shares, capital combined for joint activity shall not be considered income

Permitted expenses, cost of production

The following shall be considered as expenses

a) material expenses

b) labour reimbursement

c) pension, unemployment, social security payments

d) amortisation allocations

e) insurance payments

f) taxes, duties, other obligatory payments which are not subject to compensation (or netting)

133

g) interest on loans, or other borrowings

h) fee for guarantees, letters of guarantee, LCs, and other banking services

i) advertisement expenses

j) representative expenses

k) business trip expenses

l) court expenses

m) reimbursement against incurred losses

n) fines and penalties, unless envisaged otherwise in this Law

o) expenses on staff recruitment

p) auditing, legal, other consolatory, information and administrative expenses

q) factoring, trust expenses

r) negative balance of foreign exchange revaluation

s) expenses within the previous three years found to be shown in a lesser amount

Elements not considered as expenses

The following shall not be considered as expenses

a) distribution of taxpayer's ownership capital among the participants

b) investments of taxpayer in the statutory capital of a third person

c) own shares repurchased by the taxpayer, or negative balance between realisation price and face value of shares

Losses

Gross income shall be reduced to the extent of real losses (ordinary losses) not exceeding the rates established by the Government for property losses, incurred in the current year

If the losses exceed the rates established by the Government, gross income may be reduced to the full extent in the following cases

a) if the losses were compensated totally, or in parts by the person who caused the losses -within the year of total or in parts compensation

b) if the person who caused the loss is not found, and criminal proceedings are suspended - within the current ,

c) if the person is acquitted or accused - from the effective moment of the

134

Deductions

a the amount of any losses that are the result of selling or exchanging property,

b the amount of any building or property tax that has already been levied,

c the amount of any means of transportation tax that has already been levied, and

d the amount of any other tax or payments which have been specified by RA legislation

Depreciation for tax purposes (depreciation of fixed assets)

Gross income shall be reduced to the extent of depreciation of fixed assets in circulation

Depreciation is given on a straight-line basis on historical cost Depreciation shall be estimated on the basis of following age terms

a) 20 years - buildings, constructions, and transfer devices

b) 10 years - hotels, resort hotels,

c) 3 years - computers and electronic equipment, assembly lines, robot equipment

d) 5 years - other fixed assets, including investments for growing cattle, plants, and land

Depreciation period of intangible assets shall be decided by the taxpayer on the basis of possible period of effective use If it is impossible to determine the period, it shall be set as 10 years, however not more than the period of taxpayer's activity

Loss Carry-Over

Gross income shall be deduced by the amount of losses incurred by the taxpayer during the previous years

Losses from taxpayer's activity shall be transferred to the following years' gross income without limitation of the period

Foreign tax relief

Profit tax may be reduced by the amount of corporate income tax paid in foreign countries The reduction may not exceed an amount equal to the tax calculated in Armenia on the income received abroad

Allowances and incentives (investment allowance)

Capital gains

Capital gains are included in the taxable profit and taxed at the applicable profits tax rate The gain is the difference between the selling price and historical cost

Dividends

135

The recipients of dividends, which are residents of Armenia, and in certain cases non-residents of Armenia are exempt from taxation in respect of dividends, whether distributed or not Non-residents are taxable in respect of dividends received The amount of tax is withheld at the source

Enterprises with foreign investments

If the share of a foreign investor in the equity capital of a resident (except banks) is at least dram 500 million after January 1, 1998, then the amount of the tax of the resident is deducted by

If the above mentioned amount of foreign investment is fulfilled in the year	then the profit tax amount of the resident with foreign investment is deducted by	
	100 percent in the years	50 percent in the years
1998	1999 & 2000	2001- 2008
1999	2000 & 2001	2002- 2009
2000	2001 & 2002	2003- 2008
2001	2002 & 2003	2004- 2007
2002	2003 & 2004	2005- 2006
2003	2004 & 2005	
2004	2005 & 2006	
2005	2006 & 2007	
2006	2007 & 2008	
2007	2008 & 2009	

If the taxpayer is liquidated within the period indicated above, the profit tax is estimated in total amount for the whole period of activity

Rates

The profit tax rates are as follows

Annual taxable profit less than dram 7 million	15% of taxable profit
Taxable income over dram 7 million	dram 1,05 million plus 25% of the amount exceeding dram 7 million

Profit tax from the income derived from organisation and the carrying out lotteries and gambling games (including carried out in casino) shall be paid at the rate of 70%

Partnerships

Although the partnerships are not legal entities in Armenia, for the purposes of taxation they are treated as corporate bodies and are taxed according to provisions of present Law

Consequently the income of the member of the partnership shall be treated as dividend

Taxation of Non-residents

Income derived from Armenian sources

The following is treated as income derived from Armenian sources

a) income derived by entrepreneurship of a non-resident in the territory of Armenia

b) passive income received by a non-resident from a resident or non-resident of Armenia

c) other income derived in Armenia by a non-resident

The following is considered as income from entrepreneurship in Armenia

a) income derived from sales of goods and products, performance of works and provision of services in Armenia, irrespective of the place of payment

b) income derived from intermediary activity in Armenia

c) income derived from administrative, financial and insurance services, if payment of the income is considered as expense of the paying entity

Passive income is the income derived exclusively by a third party from the property or other assets provided or invested by a non-resident within the territory of Armenia

a) dividends

b) interest

c) royalty

d) increase in value of property, or other assets, resulting from alienation of property, or other assets in Armenia

e) administrative services

f) assistance for the effective use of transferred property, or rights

g) assistance in installation and operation of equipment, assembly lines, mechanisms, and devices

h) fee for insurance, unless envisaged otherwise in legislation of Armenia

i) consultation, assistance, or other services provided for any scientific, industrial, or trade project, or management of a joint venture

j) consultation, and services provided by foreign companies to their subdivisions operating in Armenia

k) freight of goods

l) mediator services provided to enterprises for import and realisation of goods

Partnerships

Non-resident member of the partnership is taxable in respect of income derived therefrom

The tax is shall be charged at the source of payment by tax agent (given partnership)

Withholding tax

Withholding tax is applicable to dividends, interest, royalty and some other types of passive income Collection of tax on profit derived in Armenia by a non-resident shall be done by a tax agent, at the source of income In the case of non-treaty country the rates are determined by present Law as follows

Type of Income	Rate
Insurance fees, Freight	5%
Dividends, Interest, Royalty, Rental on lease of property, Increase of property value, Other passive income (except the income from freight) as well as other income from Armenian sources	15%

138

Subdivision of non-resident and the place of business

A subdivision of a non-resident is a separate subdivision of the non-resident registered in Armenia

Place of business of a non-resident is the actual place of entrepreneurship of a non-resident which doesn't have a subdivision in Armenia

Place of business can be an office, agency, plant, factory, workshop, mine, oil, or gas rig, place of geological research of minerals, construction site, service, assembly, installation, supervision of equipment

If the entrepreneurship is carried out through an entrepreneur agent, the place of business shall be the place of location of the entrepreneur agent

An entrepreneur agent is a resident legal person, enterprise without the status of a legal person, or physical person, whose activity is controlled by the non-resident through a letter of authority, or in any other manner, and who performs the following activity for the non-resident (authorising person)

a) arrangement of purchases, signing purchase, or other agreements

b) establishment of contractual agency relationship with a third party, regular accumulation, and storage of goods belonging to the authorising person, delivery of such goods on behalf of the authorising person

c) representing the authorising person in signing trade agreements, or performing purchase orders

Tax returns and assessments

The profit tax is calculated by the payee independently, using appropriate rates and tax privileges Profit tax payers shall submit tax calculations, and financial reports to local Tax Inspectorate on annual basis, prior to April 15 of the next year

Foreign legal entities (representative offices) should present to the tax authorities their activity reports along with a declaration on earned incomes not later than April 15th of the year next to the reporting one

A taxpayer shall pay profit tax to the state budget prior to April 25-th of the following year

Advance payments of profit tax, in a manner depending on circumstances are envisaged by the present Law

For certain taxpayers, and groups of taxpayers presumptive tax is envisaged instead of profit tax

INCOME TAX

In general

The Law ''On Income Tax" adopted on December 27, 1997 and effective from January 1, 1998, replaced the former Law "On Income Tax", determines the taxation of personal income of individuals

13

The tax year is the calendar year

Taxpayers

Income tax payers in Armenia shall be

a) individuals, which are residents of Armenia Residents are liable for income tax on their world-wide income

b) individuals, which are non-residents of Armenia Non-residents are taxable on the income derived from a limited number of Armenian sources

Pursuant to domestic legislation an individual shall be regarded resident in Armenia, if

- he (she) has a permanent place of residence in Armenia, or
- the person resides in Armenia any given 183 calendar days or more in any given 12 months period commencing or finishing during the taxation year

Residents are taxed on their total gross income, which is the income from all domestic and foreign sources less the associated expenses This income may be further reduced by certain deductions and allowances not directly related to a specific source of income The balance is the total net income This total net income is further reduced by the deductions of personal allowances before tax is levied The result is the taxable amount

Several social categories are automatically excluded (e g , invalids, veterans, etc)

Tax base (taxable income)

Object of taxation for residents shall be the taxable income derived in Armenia and outside

Object of taxation for non-residents shall be taxable income derived from Armenian sources

Exempt income

Certain income is income tax exempt in Armenia A brief summary of exempt items of income is specified below

Tax on Armenian-source income is normally paid by deduction of tax at source Income from an overseas source is assessed on a yearly basis

Benefits in kind are taxable The taxable benefit is the cash equivalent which is generally defined as the market value of the benefit provided

The following monetary (in drams officially in circulation in the Republic of Armenia, as well as in foreign currency) and in-kind incomes received by individuals shall be subject to taxation

- incomes deriving from implementation of labour and civil and legal agreements,
- authors royalties,
- incomes deriving from business activities,
- incomes deriving from leasing of property,
- incomes deriving from share capital participation, securities and deposit payments, as well as
- other incomes In-kind (non-monetary) incomes shall be taxed in compliance with the State fixed

- prices of the commodities, and in the absence of such prices, in compliance with market prices,
- pursuant to the order established by the Government of the Republic of Armenia

Incomes in foreign currencies shall be recalculated in drams, officially in circulation in the Republic of Armenia, basing on the exchange rate defined by the Central Bank of the Republic of Armenia as of the day of receiving such income

Rates

The income tax rates are as follows

Annual income less than dram 96,000	0% of taxable income
Annual income form 96,000 to 216,000	15% of the amount above dram 96,000
Annual income form 216,000 to 416,000	dram 18,000 plus 25% of the amount above dram 216,000
Annual income above 416,000	dram 68,000 plus 30% of the amount above dram 416,000

Returns and assessments Payments

If a taxpayer's only income is from employment (which is subject to withholding tax at source), the individual is not required to file an income tax return with the tax authorities

Where there is a further tax liability, a return must be filed by taxpayer until March 1 of the year that follows the year under consideration The income tax shall be paid until May 1 of the year that follows the year under consideration

Partnerships

Although the partnerships are not treated as legal entities in Armenia, for the purposes of taxation they are treated as corporate bodies and are taxed according to provisions of Profit Tax Law

Non-residents

Some allowances and deductions are not permitted for non-residents the following income of non-residents is subject to Armenia income tax

income from employment, comprising employment exercised in Armenia on behalf of a foreign employer,

income from independent services,

director's fee,

income from Armenia registered partnership,

income from real estate

income from usage of movable property

Social security contributions

In general

The Law "On obligatory social insurance payments" adopted on December 26, 1997 and effective from January 1,1998, replaced the former

Taxpayers

Pursuant to the present Law Armenian employers (legal entities and enterprises without the status of legal entity) as well as employees (citizens of Armenia) are liable to make contributions to the social insurance fund

Taxable base

Any income derived from labour relations, including any monetary payment or material value, received by employee

Rates

The total amount of contributions, which are deductible for profit and income tax purposes, is established as follows

In respect of employer

Object of taxation per capita	Social payments	
	rates (per cent)	tax amount
Up to and including 8 times the minimum salary	32	32 per cent of taxable object
For the amount exceeding 8 times the minimum salary up to and including 16 times the minimum salary	27	40 per cent of the minimum salary plus 27 per cent of taxable object
For the amount exceeding 16 times the minimum salary	22	120 per cent of the minimum salary plus 22 per cent of taxable object

In respect of employee

3 per cent from the gross amount of salary received

The employer is responsible also for calculation and payment of employees' portion of social security contributions

In respect of self-employed persons (sole entrepreneurs and individuals carrying on independent personal services)

20 per cent of total annual income

The amount of 13 times of the minimum salary per annum is established as maximum monthly contribution of employee and employer together

Foreign legal entities are subject to the social security fund contributions if they are employing local employees

Double taxation avoidance

Tax treaties

Currently Armenia has effective double taxation conventions for the avoidance of double taxation and prevention of fiscal evasion with respect to taxes on income and on capital with 6 countries Income tax paid in that countries by Armenian resident may be effectively offset against individual income tax payable in Armenia and vice versa

If no convention is applicable the tax relief may be obtained on the basis of the unilateral provision of the internal law for the prevention of double taxation These include a family home, duration of presence in Armenia and some other The legal provisions stipulate the principles of determination of the residence

Nationality is not a determining factor, but it may be relevant in some cases

Armenian diplomats and their civil servants serving abroad remain residents of Armenia Foreign diplomats and the staff of certain international institutions are exempt from Armenian income tax

The income amount received by taxpayers of the Republic of Armenia outside the ***Republic*** of Armenia shall be included in the aggregate total income amount subject to taxation in the Republic of Armenia, and such amount shall be taken into consideration when defining the tax amount

The income tax amount levied in the Republic of Armenia shall be decreased by the tax amount, which have been levied from the taxpayer of the Republic of Armenia in foreign countries in conformity with the legislation of such countries

To this end, the decreased amounts shall not exceed the tax amounts payable in the Republic of Armenia

Value added tax (VAT)

In general, all businesses should register for VAT purposes before they begin operations, even if they are in business that is considered as VAT exempt

According to the Law "On Value Added Tax", adopted on May 14, 1997, VAT shall be charged on any supply of goods and services or import of goods and services as well as self-consumption performed by a taxable person

A supply of goods is a transfer of ownership to other person for consideration to entitle it to dispose the transferred possession

A supply of services is a transaction based on acts done by a person for consideration It includes transfer (sale) of any obligation, rights or intangible assets, as well as lease of goods

Self-consumption itself is a supply of goods and services to an entrepreneur , employees or other persons In addition, self consumption is comprises non-received part of value, that is below the market value of supply of goods and services

The VAT paid for active parts of the fixed assets and non-material assets may be offset against the VAT collected for the fixed assets when are put into production and for non-material assets after being recorded in the accounting journals

a) the entire amount if their statutory value does not exceed three hundred times the minimum monthly wage,

b) during the period of six months in equal parts, if the value exceeds the three hundred times of the minimum monthly wage

The VAT paid for the fixed assets that are not for production purposes can not be offset and is included into the historical cost of the assets and are subject to depreciation

Rates

There are two rates of VAT 20% and 0%

At present the rate of the VAT tax shall be determined

20% of taxed circulation of goods (labour and services) of productive and

technical significance, which are realised at free prices and tariffs, as well as at stately regulated wholesale prices and tariffs,

For goods of productive and technical significance industrial-technical products and services, sold at free-market prices and tariffs, as well as state-fixed wholesale prices and tariffs - 20%

For consumer products, and services sold on state-fixed prices and tariffs that include VAT - 16 67%

The same rate of 16 67 percent is applicable to resale (retail of consumer goods, catering, intermediary activities, brokerage, etc), and delivery of services, the cost of which includes the 20 percent VAT

- for those commodities (labour and services), the prices and tariffs of which already include the value-added tax at the rate of 16,67%

Payment and filing

In the given period the VAT due to the budget is calculated as the difference between VAT collected in the same period from customers and the VAT paid for row materials, fuel, works and services used for production purposes in the same period, as well as the VAT paid for the products (for wholesalers), the VAT paid to other suppliers for active parts of the fixed assets and non-material assets

Non-bank loans are included in turnover on which VAT must be collected

In particular if the place of providing services is the Republic of Armenia, the turnover will be subject to VAT regardless of the residence status of a recipient

The object of the taxation and the tax circulation

A taxation object shall be the circulation of realisation of all the goods, executed labour or provided services, as well as

1) the realisation circulation of exchange of goods (labour or services) with other goods (labour or services) without cash identity or the realisation by partial indemnity,

2) the realisation circulation of those goods (labour or services) within the enterprise, targeted to its own consumption, the expenses of which are not included in the cost of product (labour or services), as well as the realisation circulation of goods (labour or services) to the employees of the enterprise,

3) the realisation circulation of goods (labour or services) provided without indemnity or at partial indemnity to other enterprises or citizens, including the employees of the enterprises except the fixed assets and stock which are transferred from a state enterprise to the balance of other state enterprise without indemnity in conformity with the order established by the legislation of the RA

Zero-rated supplies

Pursuant to the Law some groups of supplies and services, mainly related to the exports, are subject to 0% VAT rate

IMPORT DUTIES

In general

Customs duties are levied on all legal and other entities and individuals importing goods to Armenia There are two rates of customs duties 0 and 10 per cent The import of goods to Armenia by individuals is taxable over the amount equal to $ US 500 The customs fee is equal to 0 3 per cent, with the ceiling equal to 600 000 Armenian Drams

Exemptions from customs duties are as follows

- transit of goods through the territory of Armenia
- the temporary entry of goods on the territory of Armenia
- the export of goods from Armenia

The individuals may import things designed for their personal use without payment of customs duties

The individuals which arrive to the Republic of Armenia with the intention of permanent living may import into the Republic of Armenia their things without payment of customs duties

The citizens of the Republic of Armenia may import into the customs territory of the Republic of Armenia their inheritance property (received abroad) without payment of customs duties after submission to the customs bodies of the Republic of Armenia the corresponding documents of inheritance

EXCISE TAX

In general

Adopted by National Assembly on June 23, 1997

All excise goods exported from Armenia are taxed at 0 per cent rate

Taxpayers

Producing/selling, and importing enterprises, organisations, companies, entrepreneurs, and citizens

For the goods (production) which are made (produced) within the territory of Armenia from the material provided by the customer who is not registered in Armenia, the excise tax shall be paid by the manufacturer (producer)

Taxable objects

The excise tax shall be paid from the proceeds received from the sale of goods subject to excise tax

The object of taxation for the goods produced in Armenia shall be their sale turnover at delivery prices (without VAT)

The excise tax shall be paid on fish caviar, beer, grape wines, wine raw material, alcohol, tobacco, petrol, diesel, fur, wool (except military, and labour jackets made of sheep wool), clothes from natural leather, crystal, and porcelain items, jewellery, costume jewellery, vehicles

Taxed turnover for any payments, exchange, or free provision of goods subject to excise taxation shall be estimated on the basis of trade prices used by the taxpayer (on the basis of market prices, if the these are unavailable)

Rates

The following excise tax rates shall be effective

Code	Name	Rate (%)
1604 30 100	caviar	200
2203	beer	50
2204, 2205, 2206	grape wine, wine raw material	50
2207, 2208	alcohol	125
2402	cigars, cigarettes with tobacco, and tobacco substitutes	100
2710 00 270 2710 00 290 2710 00 320 2710 00 340 2710 00 360	petrol	35
2710 00 590	diesel fuel	10
42 03	clothes from natural leather	25
43 01, 43 02, 43 03 4303 10 300	natural fur, and items made of it of which military/labour jackets from sheep wool	25 0
6911, 7013 31	crystal and porcelain items	25
7113, 7114, 7115, 7116, 7117	jewellery, costume jewellery	15
8703	vehicles	15

Presumptive taxes may be established for goods imported to Armenia

Assessment

Tax payers independently determine the amount of excise tax that they must pay - taking into consideration the volume of products sold that are subject to excise tax.

Exemptions

The following shall not be subject to excise tax

- Sale of goods for export (including export to the CIS)
- Goods imported by officials of foreign embassies, and consulates for official use, goods imported by the chiefs, diplomatic personnel, administrative/technical staff of diplomatic representative offices, consul, consulate personnel and members of their families for personal use
- Goods imported by individuals, if less than the taxed quantity, as defined by the customs law
- Goods on transit through Armenia
- Goods imported to Armenia within the framework of humanitarian assistance, and relief programs
- The temporary entry of goods on the territory of Armenia
- Goods imported to Armenia, which were previously temporarily exported

Terms and Procedure of Estimating the Tax

The amount of tax shall be estimated by the taxpayer, on the basis of

1) Taxed turnover, and the excise tax rates fixed for the goods produced in Armenia

2) Customs tariffs, and the excise tax rates fixed for the goods imported to Armenia,

of which the tax amount per litter of goods under the code number 2203 shall not be less than dram equivalent of $0 35, per litter of alcohol under the code numbers 2204, 2205, and 2206 - less than dram equivalent of $1 5, per litter of alcohol under the code number 2207 - less than $1 2, per litter of alcohol under the code number 2208 - less than $3 75, per ton of goods under the code numbers 2710 00 270, 2710 00 290, 2710 00 320, 2710 00 340, and 2710 00 360 - less than dram equivalent of $60, and per ton of goods under the code number 2710 00 590 - less than dram equivalent of $15

The excise tax on goods imported to Armenia shall be paid in the Customs House, at the moment of importing

148

TABLE B 2-1 BASE CASE

9/10/98 16 02
H \Etd\Carol\Goodman\ECOCB4 xls

INPUT DATA AND ASSUMPTIONS

Yerevan Capital Cost million $US		237 5
Capital Cost Expenditure Schedule / /yr		
	Year 1	0 00
	Year 2	8 76
	Year 3	72 97
	Year 4	18 27
Commercial Operation Date	Jan 2004	
Plant Life years	25	
Fuel Prices		
Natural Gas $/Gcal	8 81	Ratio
Mazut $/Gcal	13 11	148 8%
Net Plant Capacity,MW		
Yerevan Combined Cycle Plant		381 2
Existing Yerevan Plant (2x150 MW)		300

Net Plant Heat Rates, Kcal/Kwh	Kcal/Kwh	Btu/Kwh
Yerevan Combined Cycle Plant	1 759	6976
Existing Yerevan Plant	2 992	11866
Existing Mazut/Gas Fired Plants	2 992	11866
Existing / age of Firing on Mazut	12	
Existing / age of Firing on Gas	88	
Capacity Factors, %		
Yerevan Combined Cycle Plant	80	
Existing Yerevan Plants	70	

	SO2	NOX	CO2	Part
Emission Values ($/ton)	400	250	7	100
Emission Rates (kg/hr)				
Yerevan Combined Cycle Plant	0	117	104 167	0
Existing Yerevan Plant (2x150 MW)	270	780	221 476	420

YEAR	CAPITAL COST $ MILLIONS	FUEL COST $ MILLIONS: WITH PROJECT* YEREVAN CC	WITHOUT PROJECT* OLD YEREVAN	WITHOUT PROJECT* OTHER GAS/MAZUT FIRED UNITS	TOTAL	BENEFITS $ MILLIONS: DIFFERENTIAL FUEL COST	AIR EMISSION REDUCTION NOX	CO2	SO2	Part	TOTAL	NET BENEFITS $ MILLIONS
2000	0 0										0 0	0 0
2001	20 8										0 0	20 8
2002	173 3										0 0	173 3
2003	43 4										0 0	-43 4
2004		41 4	51 3	23 2	74 5	33 1	1 2	5 8	0 8	0 3	41 1	41 1
2005		41 4	51 3	23 2	74 5	33 1	1 2	5 8	0 8	0 3	41 1	41 1
2006		41 4	51 3	23 2	74 5	33 1	1 2	5 8	0 8	0 3	41 1	41 1
2007		41 4	51 3	23 2	74 5	33 1	1 2	5 8	0 8	0 3	41 1	41 1
2008		41 4	51 3	23 2	74 5	33 1	1 2	5 8	0 8	0 3	41 1	41 1
2009		41 4	51 3	23 2	74 5	33 1	1 2	5 8	0 8	0 3	41 1	41 1
2010		41 4	51 3	23 2	74 5	33 1	1 2	5 8	0 8	0 3	41 1	41 1
2011		41 4	51 3	23 2	74 5	33 1	1 2	5 8	0 8	0 3	41 1	41 1
2012		41 4	51 3	23 2	74 5	33 1	1 2	5 8	0 8	0 3	41 1	41 1
2013		41 4	51 3	23 2	74 5	33 1	1 2	5 8	0 8	0 3	41 1	41 1
2014		41 4	51 3	23 2	74 5	33 1	1 2	5 8	0 8	0 3	41 1	41 1
2015		41 4	51 3	23 2	74 5	33 1	1 2	5 8	0 8	0 3	41 1	41 1
2016		41 4	51 3	23 2	74 5	33 1	1 2	5 8	0 8	0 3	41 1	41 1
2017		41 4	51 3	23 2	74 5	33 1	1 2	5 8	0 8	0 3	41 1	41 1
2018		41 4	51 3	23 2	74 5	33 1	1 2	5 8	0 8	0 3	41 1	41 1
2019		41 4	51 3	23 2	74 5	33 1	1 2	5 8	0 8	0 3	41 1	41 1
2020		41 4	51 3	23 2	74 5	33 1	1 2	5 8	0 8	0 3	41 1	41 1
2021		41 4	51 3	23 2	74 5	33 1	1 2	5 8	0 8	0 3	41 1	41 1
2022		41 4	51 3	23 2	74 5	33 1	1 2	5 8	0 8	0 3	41 1	41 1
2023		41 4	51 3	23 2	74 5	33 1	1 2	5 8	0 8	0 3	41 1	41 1
2024		41 4	51 3	23 2	74 5	33 1	1 2	5 8	0 8	0 3	41 1	41 1
2025		41 4	51 3	23 2	74 5	33 1	1 2	5 8	0 8	0 3	41 1	41 1
2026		41 4	51 3	23 2	74 5	33 1	1 2	5 8	0 8	0 3	41 1	41 1
2027		41 4	51 3	23 2	74 5	33 1	1 2	5 8	0 8	0 3	41 1	41 1
2028		41 4	51 3	23 2	74 5	33 1	1 2	5 8	0 8	0 3	41 1	41 1
											EIRR (%) =	14 8 /

TABLE B 2-2 Capital Costs + 10%

9/10/98 16 03
H \Etd\Carol\Goodman\ECOCB4 xls

INPUT DATA AND ASSUMPTIONS

Yerevan Capital Cost million $US		261 3
Capital Cost Expenditure Schedule % /yr		
	Year 1	0 00
	Year 2	8 76
	Year 3	72 97
	Year 4	18 27
Commercial Operation Date	Jan 2004	
Plant Life years	25	

Net Plant Heat Rates, Kcal/Kwh	Kcal/Kwh	Btu/Kwh
Yerevan Combined Cycle Plant	1 759	6976
Existing Yerevan Plant	2 992	11866
Existing Mazut/Gas Fired Plants	2 992	11866
Existing / age of Firing on Mazut	12	
Existing % age of Firing on Gas	88	

Capacity Factors, %	
Yerevan Combined Cycle Plant	80
Existing Yerevan Plants	70

Fuel Prices		Ratio
Natural Gas $/Gcal	8 81	
Mazut $/Gcal	13 11	148 8 /

Emission Values ($/ton)	SO2	NOX	CO2	Part
	400	250	7	100

Net Plant Capacity,MW	
Yerevan Combined Cycle Plant	381 2
Existing Yerevan Plant (2x150 MW)	300

Emission Rates (kg/hr)	SO2	NOX	CO2	Part
Yerevan Combined Cycle Plant	0	117	104 167	0
Existing Yerevan Plant (2x150 MW)	270	780	221 476	420

YEAR	CAPITAL COST $ MILLIONS	FUEL COST $ MILLIONS: WITH PROJECT* YEREVAN CC	WITHOUT PROJECT* OLD YEREVAN	WITHOUT PROJECT* OTHER GAS/MAZUT FIRED UNITS	TOTAL	BENEFITS $ MILLIONS: DIFFERENTIAL FUEL COST	AIR EMISSION REDUCTION NOX	CO2	SO2	Part	TOTAL	NET BENEFITS $ MILLIONS
2000	0 0										0 0	0 0
2001	22 9										0 0	22 9
2002	190 6										0 0	190 6
2003	-47 7										0 0	-47 7
2004		41 4	51 3	23 2	74 5	33 1	1 2	5 8	0 8	0 3	41 1	41 1
2005		41 4	51 3	23 2	74 5	33 1	1 2	5 8	0 8	0 3	41 1	41 1
2006		41 4	51 3	23 2	74 5	33 1	1 2	5 8	0 8	0 3	41 1	41 1
2007		41 4	51 3	23 2	74 5	33 1	1 2	5 8	0 8	0 3	41 1	41 1
2008		41 4	51 3	23 2	74 5	33 1	1 2	5 8	0 8	0 3	41 1	41 1
2009		41 4	51 3	23 2	74 5	33 1	1 2	5 8	0 8	0 3	41 1	41 1
2010		41 4	51 3	23 2	74 5	33 1	1 2	5 8	0 8	0 3	41 1	41 1
2011		41 4	51 3	23 2	74 5	33 1	1 2	5 8	0 8	0 3	41 1	41 1
2012		41 4	51 3	23 2	74 5	33 1	1 2	5 8	0 8	0 3	41 1	41 1
2013		41 4	51 3	23 2	74 5	33 1	1 2	5 8	0 8	0 3	41 1	41 1
2014		41 4	51 3	23 2	74 5	33 1	1 2	5 8	0 8	0 3	41 1	41 1
2015		41 4	51 3	23 2	74 5	33 1	1 2	5 8	0 8	0 3	41 1	41 1
2016		41 4	51 3	23 2	74 5	33 1	1 2	5 8	0 8	0 3	41 1	41 1
2017		41 4	51 3	23 2	74 5	33 1	1 2	5 8	0 8	0 3	41 1	41 1
2018		41 4	51 3	23 2	74 5	33 1	1 2	5 8	0 8	0 3	41 1	41 1
2019		41 4	51 3	23 2	74 5	33 1	1 2	5 8	0 8	0 3	41 1	41 1
2020		41 4	51 3	23 2	74 5	33 1	1 2	5 8	0 8	0 3	41 1	41 1
2021		41 4	51 3	23 2	74 5	33 1	1 2	5 8	0 8	0 3	41 1	41 1
2022		41 4	51 3	23 2	74 5	33 1	1 2	5 8	0 8	0 3	41 1	41 1
2023		41 4	51 3	23 2	74 5	33 1	1 2	5 8	0 8	0 3	41 1	41 1
2024		41 4	51 3	23 2	74 5	33 1	1 2	5 8	0 8	0 3	41 1	41 1
2025		41 4	51 3	23 2	74 5	33 1	1 2	5 8	0 8	0 3	41 1	41 1
2026		41 4	51 3	23 2	74 5	33 1	1 2	5 8	0 8	0 3	41 1	41 1
2027		41 4	51 3	23 2	74 5	33 1	1 2	5 8	0 8	0 3	41 1	41 1
2028		41 4	51 3	23 2	74 5	33 1	1 2	5 8	0 8	0 3	41 1	41 1
											EIRR (%) =	13 4 /

150

TABLE B 2-3 Capital Costs - 10%

9/10/98 16 04
H \Etd\Carol\Goodman\ECOCB4 xls

INPUT DATA AND ASSUMPTIONS

Yerevan Capital Cost million $US		213 8
Capital Cost Expenditure Schedule %/yr		
	Year 1	0 00
	Year 2	8 76
	Year 3	72 97
	Year 4	18 27
Commercial Operation Date	Jan 2004	
Plant Life years	25	
Fuel Prices		
Natural Gas $/Gcal	8 81	Ratio
Mazut $/Gcal	13 11	148 8 /
Net Plant Capacity,MW		
Yerevan Combined Cycle Plant		381 2
Existing Yerevan Plant (2x150 MW)		300

Net Plant Heat Rates, Kcal/Kwh	Kcal/Kwh	Btu/Kwh
Yerevan Combined Cycle Plant	1 759	6976
Existing Yerevan Plant	2 992	11866
Existing Mazut/Gas Fired Plants	2 992	11866
Existing %age of Firing on Mazut	12	
Existing %age of Firing on Gas	88	
Capacity Factors, /		
Yerevan Combined Cycle Plant	80	
Existing Yerevan Plants	70	

	SO2	NOX	CO2	Part
Emission Values ($/ton)	400	250	7	100
Emission Rates (kg/hr)				
Yerevan Combined Cycle Plant	0	117	104 167	0
Existing Yerevan Plant (2x150 MW)	270	780	221 476	420

YEAR	CAPITAL COST $ MILLIONS	FUEL COST $ MILLIONS: WITH PROJECT* YEREVAN CC	WITHOUT PROJECT* OLD YEREVAN	WITHOUT PROJECT* OTHER GAS/MAZUT FIRED UNITS	TOTAL	BENEFITS $ MILLIONS: DIFFERENTIAL FUEL COST	AIR EMISSION REDUCTION NOX	CO2	SO2	Part	TOTAL	NET BENEFITS $ MILLIONS
2000	0 0										0 0	0 0
2001	18 7										0 0	18 7
2002	156 0										0 0	156 0
2003	39 1										0 0	39 1
2004		41 4	51 3	23 2	74 5	33 1	1 2	5 8	0 8	0 3	41 1	41 1
2005		41 4	51 3	23 2	74 5	33 1	1 2	5 8	0 8	0 3	41 1	41 1
2006		41 4	51 3	23 2	74 5	33 1	1 2	5 8	0 8	0 3	41 1	41 1
2007		41 4	51 3	23 2	74 5	33 1	1 2	5 8	0 8	0 3	41 1	41 1
2008		41 4	51 3	23 2	74 5	33 1	1 2	5 8	0 8	0 3	41 1	41 1
2009		41 4	51 3	23 2	74 5	33 1	1 2	5 8	0 8	0 3	41 1	41 1
2010		41 4	51 3	23 2	74 5	33 1	1 2	5 8	0 8	0 3	41 1	41 1
2011		41 4	51 3	23 2	74 5	33 1	1 2	5 8	0 8	0 3	41 1	41 1
2012		41 4	51 3	23 2	74 5	33 1	1 2	5 8	0 8	0 3	41 1	41 1
2013		41 4	51 3	23 2	74 5	33 1	1 2	5 8	0 8	0 3	41 1	41 1
2014		41 4	51 3	23 2	74 5	33 1	1 2	5 8	0 8	0 3	41 1	41 1
2015		41 4	51 3	23 2	74 5	33 1	1 2	5 8	0 8	0 3	41 1	41 1
2016		41 4	51 3	23 2	74 5	33 1	1 2	5 8	0 8	0 3	41 1	41 1
2017		41 4	51 3	23 2	74 5	33 1	1 2	5 8	0 8	0 3	41 1	41 1
2018		41 4	51 3	23 2	74 5	33 1	1 2	5 8	0 8	0 3	41 1	41 1
2019		41 4	51 3	23 2	74 5	33 1	1 2	5 8	0 8	0 3	41 1	41 1
2020		41 4	51 3	23 2	74 5	33 1	1 2	5 8	0 8	0 3	41 1	41 1
2021		41 4	51 3	23 2	74 5	33 1	1 2	5 8	0 8	0 3	41 1	41 1
2022		41 4	51 3	23 2	74 5	33 1	1 2	5 8	0 8	0 3	41 1	41 1
2023		41 4	51 3	23 2	74 5	33 1	1 2	5 8	0 8	0 3	41 1	41 1
2024		41 4	51 3	23 2	74 5	33 1	1 2	5 8	0 8	0 3	41 1	41 1
2025		41 4	51 3	23 2	74 5	33 1	1 2	5 8	0 8	0 3	41 1	41 1
2026		41 4	51 3	23 2	74 5	33 1	1 2	5 8	0 8	0 3	41 1	41 1
2027		41 4	51 3	23 2	74 5	33 1	1 2	5 8	0 8	0 3	41 1	41 1
2028		41 4	51 3	23 2	74 5	33 1	1 2	5 8	0 8	0 3	41 1	41 1

EIRR (%) = 16 3%

15

TABLE B 2-4 Mazut = 140% of Gas

9/10/98 16 09
H \Etd\Carol\Goodman\ECOCB4 xls

INPUT DATA AND ASSUMPTIONS

Yerevan Capital Cost million $US		237 5
Capital Cost Expenditure Schedule % /yr		
	Year 1	0 00
	Year 2	8 76
	Year 3	72 97
	Year 4	18 27
Commercial Operation Date	Jan 2004	
Plant Life years	25	

Fuel Prices		
Natural Gas $/Gcal	8 81	Ratio
Mazut $/Gcal	12 334	140 0 /

Net Plant Capacity,MW	
Yerevan Combined Cycle Plant	361 2
Existing Yerevan Plant (2x150 MW)	300

Net Plant Heat Rates, Kcal/Kwh	Kcal/Kwh	Btu/Kwh
Yerevan Combined Cycle Plant	1 759	6976
Existing Yerevan Plant	2 992	11866
Existing Mazut/Gas Fired Plants	2 992	11866
Existing / age of Firing on Mazut	12	
Existing / age of Firing on Gas	88	

Capacity Factors, %	
Yerevan Combined Cycle Plant	80
Existing Yerevan Plants	70

	SO2	NOX	CO2	Part
Emission Values ($/ton)	400	250	7	100
Emission Rates (kg/hr)				
Yerevan Combined Cycle Plant	0	117	104 167	0
Existing Yerevan Plant (2x150 MW)	270	780	221 476	420

YEAR	CAPITAL COST $ MILLIONS	FUEL COST $ MILLIONS: WITH PROJECT* YEREVAN CC	WITHOUT PROJECT* OLD YEREVAN	WITHOUT PROJECT* OTHER GAS/MAZUT FIRED UNITS	WITHOUT PROJECT* TOTAL	BENEFITS $ MILLIONS: DIFFERENTIAL FUEL COST	AIR EMISSION REDUCTION NOX	CO2	SO2	Part	TOTAL	NET BENEFITS $ MILLIONS
2000	0 0										0 0	0 0
2001	20 8										0 0	20 8
2002	173 3										0 0	173 3
2003	-43 4										0 0	-43 4
2004		41 4	50 8	23 0	73 8	32 4	1 2	5 8	0 8	0 3	40 4	40 4
2005		41 4	50 8	23 0	73 8	32 4	1 2	5 8	0 8	0 3	40 4	40 4
2006		41 4	50 8	23 0	73 8	32 4	1 2	5 8	0 8	0 3	40 4	40 4
2007		41 4	50 8	23 0	73 8	32 4	1 2	5 8	0 8	0 3	40 4	40 4
2008		41 4	50 8	23 0	73 8	32 4	1 2	5 8	0 8	0 3	40 4	40 4
2009		41 4	50 8	23 0	73 8	32 4	1 2	5 8	0 8	0 3	40 4	40 4
2010		41 4	50 8	23 0	73 8	32 4	1 2	5 8	0 8	0 3	40 4	40 4
2011		41 4	50 8	23 0	73 8	32 4	1 2	5 8	0 8	0 3	40 4	40 4
2012		41 4	50 8	23 0	73 8	32 4	1 2	5 8	0 8	0 3	40 4	40 4
2013		41 4	50 8	23 0	73 8	32 4	1 2	5 8	0 8	0 3	40 4	40 4
2014		41 4	50 8	23 0	73 8	32 4	1 2	5 8	0 8	0 3	40 4	40 4
2015		41 4	50 8	23 0	73 8	32 4	1 2	5 8	0 8	0 3	40 4	40 4
2016		41 4	50 8	23 0	73 8	32 4	1 2	5 8	0 8	0 3	40 4	40 4
2017		41 4	50 8	23 0	73 8	32 4	1 2	5 8	0 8	0 3	40 4	40 4
2018		41 4	50 8	23 0	73 8	32 4	1 2	5 8	0 8	0 3	40 4	40 4
2019		41 4	50 8	23 0	73 8	32 4	1 2	5 8	0 8	0 3	40 4	40 4
2020		41 4	50 8	23 0	73 8	32 4	1 2	5 8	0 8	0 3	40 4	40 4
2021		41 4	50 8	23 0	73 8	32 4	1 2	5 8	0 8	0 3	40 4	40 4
2022		41 4	50 8	23 0	73 8	32 4	1 2	5 8	0 8	0 3	40 4	40 4
2023		41 4	50 8	23 0	73 8	32 4	1 2	5 8	0 8	0 3	40 4	40 4
2024		41 4	50 8	23 0	73 8	32 4	1 2	5 8	0 8	0 3	40 4	40 4
2025		41 4	50 8	23 0	73 8	32 4	1 2	5 8	0 8	0 3	40 4	40 4
2026		41 4	50 8	23 0	73 8	32 4	1 2	5 8	0 8	0 3	40 4	40 4
2027		41 4	50 8	23 0	73 8	32 4	1 2	5 8	0 8	0 3	40 4	40 4
2028		41 4	50 8	23 0	73 8	32 4	1 2	5 8	0 8	0 3	40 4	40 4
											EIRR (/) =	14 5%

152

TABLE B 2-5 Mazut = 130% of Gas

9/10/98 16 09
H \Etd\Carol\Goodman\ECOCB4 xls

INPUT DATA AND ASSUMPTIONS

Yerevan Capital Cost million $US		237 5	Net Plant Heat Rates, Kcal/Kwh		Kcal/Kwh	Btu/Kwh		
			Yerevan Combined Cycle Plant		1 759	6976		
Capital Cost Expenditure Schedule %/yr			Existing Yerevan Plant		2 992	11866		
	Year 1	0 00	Existing Mazut/Gas Fired Plants		2 992	11866		
	Year 2	8 76						
	Year 3	72 97	Existing / age of Firing on Mazut		12			
	Year 4	18 27	Existing / age of Firing on Gas		88			
Commercial Operation Date	Jan 2004							
Plant Life years	25		Capacity Factors, %					
			Yerevan Combined Cycle Plant		80			
			Existing Yerevan Plants		70			
Fuel Prices				SO2	NOX	CO2	Part	
Natural Gas $/Gcal	8 81	Ratio						
Mazut $/Gcal	11 453	130 0 /	Emission Values ($/ton)	400	250	7	100	
Net Plant Capacity,MW			Emission Rates (kg/hr)					
Yerevan Combined Cycle Plant		381 2	Yerevan Combined Cycle Plant	0	117	104 167	0	
Existing Yerevan Plant (2x150 MW)		300	Existing Yerevan Plant (2x150 MW)	270	780	221 476	420	

YEAR	CAPITAL COST $ MILLIONS	FUEL COST $ MILLIONS: WITH PROJECT* YEREVAN CC	WITHOUT PROJECT* OLD YEREVAN	WITHOUT PROJECT* OTHER GAS/MAZUT FIRED UNITS	TOTAL	BENEFITS $ MILLIONS: DIFFERENTIAL FUEL COST	AIR EMISSION REDUCTION NOX	CO2	SO2	Part	TOTAL	NET BENEFITS $ MILLIONS
2000	0 0										0 0	0 0
2001	20 8										0 0	20 8
2002	173 3										0 0	173 3
2003	-43 4										0 0	43 4
2004		41 4	50 2	22 7	73 0	31 6	1 2	5 8	0 8	0 3	39 5	39 5
2005		41 4	50 2	22 7	73 0	31 6	1 2	5 8	0 8	0 3	39 5	39 5
2006		41 4	50 2	22 7	73 0	31 6	1 2	5 8	0 8	0 3	39 5	39 5
2007		41 4	50 2	22 7	73 0	31 6	1 2	5 8	0 8	0 3	39 5	39 5
2008		41 4	50 2	22 7	73 0	31 6	1 2	5 8	0 8	0 3	39 5	39 5
2009		41 4	50 2	22 7	73 0	31 6	1 2	5 8	0 8	0 3	39 5	39 5
2010		41 4	50 2	22 7	73 0	31 6	1 2	5 8	0 8	0 3	39 5	39 5
2011		41 4	50 2	22 7	73 0	31 6	1 2	5 8	0 8	0 3	39 5	39 5
2012		41 4	50 2	22 7	73 0	31 6	1 2	5 8	0 8	0 3	39 5	39 5
2013		41 4	50 2	22 7	73 0	31 6	1 2	5 8	0 8	0 3	39 5	39 5
2014		41 4	50 2	22 7	73 0	31 6	1 2	5 8	0 8	0 3	39 5	39 5
2015		41 4	50 2	22 7	73 0	31 6	1 2	5 8	0 8	0 3	39 5	39 5
2016		41 4	50 2	22 7	73 0	31 6	1 2	5 8	0 8	0 3	39 5	39 5
2017		41 4	50 2	22 7	73 0	31 6	1 2	5 8	0 8	0 3	39 5	39 5
2018		41 4	50 2	22 7	73 0	31 6	1 2	5 8	0 8	0 3	39 5	39 5
2019		41 4	50 2	22 7	73 0	31 6	1 2	5 8	0 8	0 3	39 5	39 5
2020		41 4	50 2	22 7	73 0	31 6	1 2	5 8	0 8	0 3	39 5	39 5
2021		41 4	50 2	22 7	73 0	31 6	1 2	5 8	0 8	0 3	39 5	39 5
2022		41 4	50 2	22 7	73 0	31 6	1 2	5 8	0 8	0 3	39 5	39 5
2023		41 4	50 2	22 7	73 0	31 6	1 2	5 8	0 8	0 3	39 5	39 5
2024		41 4	50 2	22 7	73 0	31 6	1 2	5 8	0 8	0 3	39 5	39 5
2025		41 4	50 2	22 7	73 0	31 6	1 2	5 8	0 8	0 3	39 5	39 5
2026		41 4	50 2	22 7	73 0	31 6	1 2	5 8	0 8	0 3	39 5	39 5
2027		41 4	50 2	22 7	73 0	31 6	1 2	5 8	0 8	0 3	39 5	39 5
2028		41 4	50 2	22 7	73 0	31 6	1 2	5 8	0 8	0 3	39 5	39 5
											EIRR (/) =	14 2%

TABLE B 2 6 Mazut = 120% of Gas

9/10/98 16 09
H \Etd\Carol\Goodman\ECOCB4 xls

INPUT DATA AND ASSUMPTIONS

Yerevan Capital Cost million $US		237 5	Net Plant Heat Rates, Kcal/Kwh		Kcal/Kwh	Btu/Kwh	
			Yerevan Combined Cycle Plant		1 759	6976	
Capital Cost Expenditure Schedule %/yr			Existing Yerevan Plant		2 992	11866	
	Year 1	0 00	Existing Mazut/Gas Fired Plants		2 992	11866	
	Year 2	8 76					
	Year 3	72 97	Existing %age of Firing on Mazut		12		
	Year 4	18 27	Existing %age of Firing on Gas		88		
Commercial Operation Date	Jan 2004						
Plant Life years	25		Capacity Factors, /				
			Yerevan Combined Cycle Plant		80		
			Existing Yerevan Plants		70		
Fuel Prices				SO2	NOX	CO2	Part
Natural Gas $/Gcal	8 81	Ratio					
Mazut $/Gcal	10 572	120 0 /	Emission Values ($/ton)	400	250	7	100
Net Plant Capacity,MW			Emission Rates (kg/hr)				
Yerevan Combined Cycle Plant		381 2	Yerevan Combined Cycle Plant	0	117	104 167	0
Existing Yerevan Plant (2x150 MW)		300	Existing Yerevan Plant (2x150 MW)	270	780	221 476	420

	CAPITAL COST	FUEL COST $ MILLIONS				BENEFITS $ MILLIONS						NET BENEFITS
		WITH PROJECT*	WITHOUT PROJECT*			DIFFERENTIAL	AIR EMISSION REDUCTION					
YEAR	$ MILLIONS	YEREVAN CC	OLD YEREVAN	OTHER GAS/MAZUT FIRED UNITS	TOTAL	FUEL COST	NOX	CO2	SO2	Part	TOTAL	$ MILLIONS
2000	0 0										0 0	0 0
2001	20 8										0 0	20 8
2002	173 3										0 0	173 3
2003	-43 4										0 0	-43 4
2004		41 4	49 7	22 5	72 1	30 7	1 2	5 8	0 8	0 3	38 7	38 7
2005		41 4	49 7	22 5	72 1	30 7	1 2	5 8	0 8	0 3	38 7	38 7
2006		41 4	49 7	22 5	72 1	30 7	1 2	5 8	0 8	0 3	38 7	38 7
2007		41 4	49 7	22 5	72 1	30 7	1 2	5 8	0 8	0 3	38 7	38 7
2008		41 4	49 7	22 5	72 1	30 7	1 2	5 8	0 8	0 3	38 7	38 7
2009		41 4	49 7	22 5	72 1	30 7	1 2	5 8	0 8	0 3	38 7	38 7
2010		41 4	49 7	22 5	72 1	30 7	1 2	5 8	0 8	0 3	38 7	38 7
2011		41 4	49 7	22 5	72 1	30 7	1 2	5 8	0 8	0 3	38 7	38 7
2012		41 4	49 7	22 5	72 1	30 7	1 2	5 8	0 8	0 3	38 7	38 7
2013		41 4	49 7	22 5	72 1	30 7	1 2	5 8	0 8	0 3	38 7	38 7
2014		41 4	49 7	22 5	72 1	30 7	1 2	5 8	0 8	0 3	38 7	38 7
2015		41 4	49 7	22 5	72 1	30 7	1 2	5 8	0 8	0 3	38 7	38 7
2016		41 4	49 7	22 5	72 1	30 7	1 2	5 8	0 8	0 3	38 7	38 7
2017		41 4	49 7	22 5	72 1	30 7	1 2	5 8	0 8	0 3	38 7	38 7
2018		41 4	49 7	22 5	72 1	30 7	1 2	5 8	0 8	0 3	38 7	38 7
2019		41 4	49 7	22 5	72 1	30 7	1 2	5 8	0 8	0 3	38 7	38 7
2020		41 4	49 7	22 5	72 1	30 7	1 2	5 8	0 8	0 3	38 7	38 7
2021		41 4	49 7	22 5	72 1	30 7	1 2	5 8	0 8	0 3	38 7	38 7
2022		41 4	49 7	22 5	72 1	30 7	1 2	5 8	0 8	0 3	38 7	38 7
2023		41 4	49 7	22 5	72 1	30 7	1 2	5 8	0 8	0 3	38 7	38 7
2024		41 4	49 7	22 5	72 1	30 7	1 2	5 8	0 8	0 3	38 7	38 7
2025		41 4	49 7	22 5	72 1	30 7	1 2	5 8	0 8	0 3	38 7	38 7
2026		41 4	49 7	22 5	72 1	30 7	1 2	5 8	0 8	0 3	38 7	38 7
2027		41 4	49 7	22 5	72 1	30 7	1 2	5 8	0 8	0 3	38 7	38 7
2028		41 4	49 7	22 5	72 1	30 7	1 2	5 8	0 8	0 3	38 7	38 7
											EIRR (%) =	13 9 /

154

TABLE B 2-7 Mazut = 110% of Gas

9/10/98 16 10
H \Etd\Carol\Goodman\ECOCB4 xls

INPUT DATA AND ASSUMPTIONS

Yerevan Capital Cost million $US		237 5
Capital Cost Expenditure Schedule %/yr		
	Year 1	0 00
	Year 2	8 76
	Year 3	72 97
	Year 4	18 27
Commercial Operation Date	Jan 2004	
Plant Life years	25	

Net Plant Heat Rates, Kcal/Kwh	Kcal/Kwh	Btu/Kwh
Yerevan Combined Cycle Plant	1 759	6976
Existing Yerevan Plant	2 992	11866
Existing Mazut/Gas Fired Plants	2 992	11866
Existing / age of Firing on Mazut	12	
Existing / age of Firing on Gas	88	

Capacity Factors, %	
Yerevan Combined Cycle Plant	80
Existing Yerevan Plants	70

Fuel Prices		Ratio
Natural Gas $/Gcal	8 81	
Mazut $/Gcal	9 691	110 0%

Net Plant Capacity,MW	
Yerevan Combined Cycle Plant	381 2
Existing Yerevan Plant (2x150 MW)	300

	SO2	NOX	CO2	Part
Emission Values ($/ton)	400	250	7	100
Emission Rates (kg/hr)				
Yerevan Combined Cycle Plant	0	117	104 167	0
Existing Yerevan Plant (2x150 MW)	270	780	221 476	420

YEAR	CAPITAL COST $ MILLIONS	FUEL COST $ MILLIONS: WITH PROJECT* YEREVAN CC	WITHOUT PROJECT* OLD YEREVAN	WITHOUT PROJECT* OTHER GAS/MAZUT FIRED UNITS	WITHOUT PROJECT* TOTAL	BENEFITS $ MILLIONS: DIFFERENTIAL FUEL COST	AIR EMISSION REDUCTION NOX	CO2	SO2	Part	TOTAL	NET BENEFITS $ MILLIONS
2000	0 0										0 0	0 0
2001	20 8										0 0	20 8
2002	173 3										0 0	173 3
2003	-43 4										0 0	-43 4
2004		41 4	49 1	22 2	71 3	29 9	1 2	5 8	0 8	0 3	37 8	37 8
2005		41 4	49 1	22 2	71 3	29 9	1 2	5 8	0 8	0 3	37 8	37 8
2006		41 4	49 1	22 2	71 3	29 9	1 2	5 8	0 8	0 3	37 8	37 8
2007		41 4	49 1	22 2	71 3	29 9	1 2	5 8	0 8	0 3	37 8	37 8
2008		41 4	49 1	22 2	71 3	29 9	1 2	5 8	0 8	0 3	37 8	37 8
2009		41 4	49 1	22 2	71 3	29 9	1 2	5 8	0 8	0 3	37 8	37 8
2010		41 4	49 1	22 2	71 3	29 9	1 2	5 8	0 8	0 3	37 8	37 8
2011		41 4	49 1	22 2	71 3	29 9	1 2	5 8	0 8	0 3	37 8	37 8
2012		41 4	49 1	22 2	71 3	29 9	1 2	5 8	0 8	0 3	37 8	37 8
2013		41 4	49 1	22 2	71 3	29 9	1 2	5 8	0 8	0 3	37 8	37 8
2014		41 4	49 1	22 2	71 3	29 9	1 2	5 8	0 8	0 3	37 8	37 8
2015		41 4	49 1	22 2	71 3	29 9	1 2	5 8	0 8	0 3	37 8	37 8
2016		41 4	49 1	22 2	71 3	29 9	1 2	5 8	0 8	0 3	37 8	37 8
2017		41 4	49 1	22 2	71 3	29 9	1 2	5 8	0 8	0 3	37 8	37 8
2018		41 4	49 1	22 2	71 3	29 9	1 2	5 8	0 8	0 3	37 8	37 8
2019		41 4	49 1	22 2	71 3	29 9	1 2	5 8	0 8	0 3	37 8	37 8
2020		41 4	49 1	22 2	71 3	29 9	1 2	5 8	0 8	0 3	37 8	37 8
2021		41 4	49 1	22 2	71 3	29 9	1 2	5 8	0 8	0 3	37 8	37 8
2022		41 4	49 1	22 2	71 3	29 9	1 2	5 8	0 8	0 3	37 8	37 8
2023		41 4	49 1	22 2	71 3	29 9	1 2	5 8	0 8	0 3	37 8	37 8
2024		41 4	49 1	22 2	71 3	29 9	1 2	5 8	0 8	0 3	37 8	37 8
2025		41 4	49 1	22 2	71 3	29 9	1 2	5 8	0 8	0 3	37 8	37 8
2026		41 4	49 1	22 2	71 3	29 9	1 2	5 8	0 8	0 3	37 8	37 8
2027		41 4	49 1	22 2	71 3	29 9	1 2	5 8	0 8	0 3	37 8	37 8
2028		41 4	49 1	22 2	71 3	29 9	1 2	5 8	0 8	0 3	37 8	37 8

EIRR (/) = 13 6%

TABLE B 2 8 Mazut = 100% of Gas

9/10/98 16 10
H \Etd\Carol\Goodman\ECOCB4 xls

INPUT DATA AND ASSUMPTIONS

Yerevan Capital Cost million $US		237 5	Net Plant Heat Rates, Kcal/Kwh		Kcal/Kwh	Btu/Kwh		
			Yerevan Combined Cycle Plant		1 759	6976		
Capital Cost Expenditure Schedule / /yr			Existing Yerevan Plant		2 992	11866		
	Year 1	0 00	Existing Mazut/Gas Fired Plants		2 992	11866		
	Year 2	8 76						
	Year 3	72 97	Existing %age of Firing on Mazut		12			
	Year 4	18 27	Existing % age of Firing on Gas		88			
Commercial Operation Date	Jan 2004							
Plant Life years	25		Capacity Factors, %					
			Yerevan Combined Cycle Plant		80			
			Existing Yerevan Plants		70			
Fuel Prices				SO2	NOX	CO2	Part	
Natural Gas $/Gcal	8 81	Ratio						
Mazut $/Gcal	8 81	100 0%	Emission Values ($/ton)	400	250	7	100	
Net Plant Capacity,MW			Emission Rates (kg/hr)					
Yerevan Combined Cycle Plant		381 2	Yerevan Combined Cycle Plant	0	117	104 167	0	
Existing Yerevan Plant (2x150 MW)		300	Existing Yerevan Plant (2x150 MW)	270	780	221 476	420	

	CAPITAL COST	FUEL COST $ MILLIONS				BENEFITS $ MILLIONS						NET BENEFITS
		WITH PROJECT*	WITHOUT PROJECT*			DIFFERENTIAL	AIR EMISSION REDUCTION					
YEAR	$ MILLIONS	YEREVAN CC	OLD YEREVAN	OTHER GAS/MAZUT FIRED UNITS	TOTAL	FUEL COST	NOX	CO2	SO2	Part	TOTAL	$ MILLIONS
2000	0 0										0 0	0 0
2001	20 8										0 0	20 8
2002	173 3										0 0	173 3
2003	-43 4										0 0	-43 4
2004		41 4	48 5	21 9	70 4	29 0	1 2	5 8	0 8	0 3	37 0	37 0
2005		41 4	48 5	21 9	70 4	29 0	1 2	5 8	0 8	0 3	37 0	37 0
2006		41 4	48 5	21 9	70 4	29 0	1 2	5 8	0 8	0 3	37 0	37 0
2007		41 4	48 5	21 9	70 4	29 0	1 2	5 8	0 8	0 3	37 0	37 0
2008		41 4	48 5	21 9	70 4	29 0	1 2	5 8	0 8	0 3	37 0	37 0
2009		41 4	48 5	21 9	70 4	29 0	1 2	5 8	0 8	0 3	37 0	37 0
2010		41 4	48 5	21 9	70 4	29 0	1 2	5 8	0 8	0 3	37 0	37 0
2011		41 4	48 5	21 9	70 4	29 0	1 2	5 8	0 8	0 3	37 0	37 0
2012		41 4	48 5	21 9	70 4	29 0	1 2	5 8	0 8	0 3	37 0	37 0
2013		41 4	48 5	21 9	70 4	29 0	1 2	5 8	0 8	0 3	37 0	37 0
2014		41 4	48 5	21 9	70 4	29 0	1 2	5 8	0 8	0 3	37 0	37 0
2015		41 4	48 5	21 9	70 4	29 0	1 2	5 8	0 8	0 3	37 0	37 0
2016		41 4	48 5	21 9	70 4	29 0	1 2	5 8	0 8	0 3	37 0	37 0
2017		41 4	48 5	21 9	70 4	29 0	1 2	5 8	0 8	0 3	37 0	37 0
2018		41 4	48 5	21 9	70 4	29 0	1 2	5 8	0 8	0 3	37 0	37 0
2019		41 4	48 5	21 9	70 4	29 0	1 2	5 8	0 8	0 3	37 0	37 0
2020		41 4	48 5	21 9	70 4	29 0	1 2	5 8	0 8	0 3	37 0	37 0
2021		41 4	48 5	21 9	70 4	29 0	1 2	5 8	0 8	0 3	37 0	37 0
2022		41 4	48 5	21 9	70 4	29 0	1 2	5 8	0 8	0 3	37 0	37 0
2023		41 4	48 5	21 9	70 4	29 0	1 2	5 8	0 8	0 3	37 0	37 0
2024		41 4	48 5	21 9	70 4	29 0	1 2	5 8	0 8	0 3	37 0	37 0
2025		41 4	48 5	21 9	70 4	29 0	1 2	5 8	0 8	0 3	37 0	37 0
2026		41 4	48 5	21 9	70 4	29 0	1 2	5 8	0 8	0 3	37 0	37 0
2027		41 4	48 5	21 9	70 4	29 0	1 2	5 8	0 8	0 3	37 0	37 0
2028		41 4	48 5	21 9	70 4	29 0	1 2	5 8	0 8	0 3	37 0	37 0
											EIRR (%) =	13 3%

156

TABLE B 2-9 Mazut = 90% of Gas

9/10/98 16 10
H \Etd\Carol\Goodman\ECOCB4 xls

INPUT DATA AND ASSUMPTIONS

Yerevan Capital Cost million $US		237 5
Capital Cost Expenditure Schedule % /yr		
	Year 1	0 00
	Year 2	8 76
	Year 3	72 97
	Year 4	18 27
Commercial Operation Date	Jan 2004	
Plant Life years	25	

Fuel Prices		
Natural Gas $/Gcal	8 81	Ratio
Mazut $/Gcal	7 929	90 0 /

Net Plant Capacity,MW	
Yerevan Combined Cycle Plant	381 2
Existing Yerevan Plant (2x150 MW)	300

Net Plant Heat Rates, Kcal/Kwh	Kcal/Kwh	Btu/Kwh
Yerevan Combined Cycle Plant	1 759	6976
Existing Yerevan Plant	2 992	11866
Existing Mazut/Gas Fired Plants	2 992	11866
Existing % age of Firing on Mazut	12	
Existing %age of Firing on Gas	88	

Capacity Factors, %	
Yerevan Combined Cycle Plant	80
Existing Yerevan Plants	70

	SO2	NOX	CO2	Part
Emission Values ($/ton)	400	250	7	100
Emission Rates (kg/hr)				
Yerevan Combined Cycle Plant	0	117	104 167	0
Existing Yerevan Plant (2x150 MW)	270	780	221 476	420

YEAR	CAPITAL COST $ MILLIONS	FUEL COST $ MILLIONS: WITH PROJECT* YEREVAN CC	WITHOUT PROJECT* OLD YEREVAN	WITHOUT PROJECT* OTHER GAS/MAZUT FIRED UNITS	WITHOUT PROJECT* TOTAL	BENEFITS $ MILLIONS: DIFFERENTIAL FUEL COST	AIR EMISSION REDUCTION NOX	CO2	SO2	Part	TOTAL	NET BENEFITS $ MILLIONS
2000	0 0										0 0	0 0
2001	20 8										0 0	20 8
2002	173 3										0 0	173 3
2003	43 4										0 0	-43 4
2004		41 4	47 9	21 7	69 6	28 2	1 2	5 8	0 8	0 3	36 1	36 1
2005		41 4	47 9	21 7	69 6	28 2	1 2	5 8	0 8	0 3	36 1	36 1
2006		41 4	47 9	21 7	69 6	28 2	1 2	5 8	0 8	0 3	36 1	36 1
2007		41 4	47 9	21 7	69 6	28 2	1 2	5 8	0 8	0 3	36 1	36 1
2008		41 4	47 9	21 7	69 6	28 2	1 2	5 8	0 8	0 3	36 1	36 1
2009		41 4	47 9	21 7	69 6	28 2	1 2	5 8	0 8	0 3	36 1	36 1
2010		41 4	47 9	21 7	69 6	28 2	1 2	5 8	0 8	0 3	36 1	36 1
2011		41 4	47 9	21 7	69 6	28 2	1 2	5 8	0 8	0 3	36 1	36 1
2012		41 4	47 9	21 7	69 6	28 2	1 2	5 8	0 8	0 3	36 1	36 1
2013		41 4	47 9	21 7	69 6	28 2	1 2	5 8	0 8	0 3	36 1	36 1
2014		41 4	47 9	21 7	69 6	28 2	1 2	5 8	0 8	0 3	36 1	36 1
2015		41 4	47 9	21 7	69 6	28 2	1 2	5 8	0 8	0 3	36 1	36 1
2016		41 4	47 9	21 7	69 6	28 2	1 2	5 8	0 8	0 3	36 1	36 1
2017		41 4	47 9	21 7	69 6	28 2	1 2	5 8	0 8	0 3	36 1	36 1
2018		41 4	47 9	21 7	69 6	28 2	1 2	5 8	0 8	0 3	36 1	36 1
2019		41 4	47 9	21 7	69 6	28 2	1 2	5 8	0 8	0 3	36 1	36 1
2020		41 4	47 9	21 7	69 6	28 2	1 2	5 8	0 8	0 3	36 1	36 1
2021		41 4	47 9	21 7	69 6	28 2	1 2	5 8	0 8	0 3	36 1	36 1
2022		41 4	47 9	21 7	69 6	28 2	1 2	5 8	0 8	0 3	36 1	36 1
2023		41 4	47 9	21 7	69 6	28 2	1 2	5 8	0 8	0 3	36 1	36 1
2024		41 4	47 9	21 7	69 6	28 2	1 2	5 8	0 8	0 3	36 1	36 1
2025		41 4	47 9	21 7	69 6	28 2	1 2	5 8	0 8	0 3	36 1	36 1
2026		41 4	47 9	21 7	69 6	28 2	1 2	5 8	0 8	0 3	36 1	36 1
2027		41 4	47 9	21 7	69 6	28 2	1 2	5 8	0 8	0 3	36 1	36 1
2028		41 4	47 9	21 7	69 6	28 2	1 2	5 8	0 8	0 3	36 1	36 1
											EIRR (%) =	13 0%

Table B 2 - 10

Sensitivity Cases

Economic Cost / Benefit Analysis

Parameter	Value	EIRR (%)	Table
Base Case - Capital Cost = $237 5 MM - Mazut Price = $13 11/Gcal (148 8% of natural gas) - Existing Yerevan Plant Capacity Factor = 70%	-	14 8	B 2-1
Total Capital Cost	+10%	13 4	B 2-2
	-10%	16 3	B 2-3
Mazut Price	140% of Natural Gas	14 5	B 2-4
	130% of Natural Gas	14 2	B 2-5
	120% of Natural Gas	13 9	B 2-6
	110% of Natural Gas	13 6	B 2-7
	100% of Natural Gas	13 3	B 2-8
	90% of Natural Gas	13 0	B 2-9

TABLE B 2 11

YEREVAN POWER PLANT FEASIBILITY STUDY
FINANCIAL ANALYSIS-BASE CASE TARIFF = $0 045 / KWH

constant 1998 dollars

Net plant output (MW)	381 20	381 20	381 20	381 20	381 20	381 20	381 20	381 20	381 20	381 20	381 20	381 20	381 20	381 20	381 20	381 20	381 20	381 20
Capacity factor (/)	80 00	80 00	80 00	80 00	80 00	80 00	80 00	80 00	80 00	80 00	80 00	80 00	80 00	80 00	80 00	80 00	80 00	80 00
Trans & distr loss factor (/)	0 00	0 00	0 00	0 00	0 00	0 00	0 00	0 00	0 00	0 00	0 00	0 00	0 00	0 00	0 00	0 00	0 00	0 00
Tariff rate ($/MWh)	0 045	0 045	0 045	0 045	0 045	0 045	0 045	0 045	0 045	0 045	0 045	0 045	0 045	0 045	0 045	0 045	0 045	0 045
Fuel cost ($/GCAL)	8 81	8 81	8 81	8 81	8 81	8 81	8 81	8 81	8 81	8 81	8 81	8 81	8 81	8 81	8 81	8 81	8 81	8 81
Loan interest rate (/)	12 00	12 00	12 00	12 00	12 00	12 00	12 00	12 00	12 00	12 00	12 00	12 00	12 00	12 00	12 00	12 00	12 00	12 00
Fixed O&M cost ($/kW/y)	0 00	0 00	0 00	0 00	14 03	14 03	14 03	14 03	14 03	14 03	14 03	14 03	14 03	14 03	14 03	14 03	14 03	14 03
Variable O&M cost ($/MWh)	0 00	0 00	0 00	0 00	0 87	0 87	0 87	0 87	0 87	0 87	0 87	0 87	0 87	0 87	0 87	0 87	0 87	0 87
Annual depreciation (/)	0 00	0 00	0 00	0 00	4 00	4 00	4 00	4 00	4 00	4 00	4 00	4 00	4 00	4 00	4 00	4 00	4 00	4 00
Taxes (/)	25 00	25 00	25 00	25 00	25 00	25 00	25 00	25 00	25 00	25 00	25 00	25 00	25 00	25 00	25 00	25 00	25 00	25 00
YEARS	**2000**	**2001**	**2002**	**2003**	**2004**	**2005**	**2006**	**2007**	**2008**	**2009**	**2010**	**2011**	**2012**	**2013**	**2014**	**2015**	**2016**	**2017**
REVENUES																		
Net plant production (GWh)	0 0	0 0	0 0	0 0	2671 4	2671 4	2671 4	2671 4	2671 4	2671 4	2671 4	2671 4	2671 4	2671 4	2671 4	2671 4	2671 4	2671 4
Trans & dist losses (GWh)					0 0	0 0	0 0	0 0	0 0	0 0	0 0	0 0	0 0	0 0	0 0	0 0	0 0	0 0
Energy sales (GWh)					2671 4	2671 4	2671 4	2671 4	2671 4	2671 4	2671 4	2671 4	2671 4	2671 4	2671 4	2671 4	2671 4	2671 4
(1) Annual revenues ($M)					120 2	120 2	120 2	120 2	120 2	120 2	120 2	120 2	120 2	120 2	120 2	120 2	120 2	120 2
CAPITAL EXPENDITURES																		
(2) EPC contractors cost ($M)		19 0	170 9	33 2														
(3) Other capital costs ($M)		0 0	0 0	0 0														
(4) Owner's cost ($M)		1 8	2 4	10 2														
(5) Interest During Construction		0 6	13 0	27 5														
OPERATING EXPENSES																		
Fuel cost ($M)					41 4	41 4	41 4	41 4	41 4	41 4	41 4	41 4	41 4	41 4	41 4	41 4	41 4	41 4
Fixed O&M cost ($M)					5 3	5 3	5 3	5 3	5 3	5 3	5 3	5 3	5 3	5 3	5 3	5 3	5 3	5 3
Variable O&M cost ($M)					2 3	2 3	2 3	2 3	2 3	2 3	2 3	2 3	2 3	2 3	2 3	2 3	2 3	2 3
(6) Subtotal expenses ($M)	0 0	0 0	0 0	0 0	49 1	49 1	49 1	49 1	49 1	49 1	49 1	49 1	49 1	49 1	49 1	49 1	49 1	49 1
FINANCIAL																		
Interest payment ($M)	0 0	1 2	13 0	27 5	32 0	29 3	26 5	23 7	20 9	18 1	15 3	12 5	9 8	7 0	4 2	1 4	0 0	0 0
Principal payment ($M)	0 0	0 0	0 0	0 0	23 2	23 2	23 2	23 2	23 2	23 2	23 2	23 2	23 2	23 2	23 2	23 2	0 0	0 0
(7) Subtotal ($M)	0 0	1 2	13 0	27 5	55 3	52 5	49 7	46 9	44 1	41 3	38 5	35 8	33 0	30 2	27 4	24 6	0 0	0 0
DEPRECIATION ($M)	0 0	0 0	0 0	0 0	11 1	11 1	11 1	11 1	11 1	11 1	11 1	11 1	11 1	11 1	11 1	11 1	11 1	11 1
PRETAX PROFITS ($M)	0 0	1 2	13 0	27 5	28 0	30 7	33 5	36 3	39 1	41 9	44 7	47 5	50 2	53 0	55 8	58 6	60 0	60 0
(8) TAXES ($M)	0 0	0 0	0 0	0 0	0 0	0 0	8 4	9 1	9 8	10 5	11 2	11 9	12 6	13 3	14 0	14 7	15 0	15 0
AFTER TAX PROFITS ($M)	0 0	1 2	13 0	27 5	28 0	30 7	25 1	27 2	29 3	31 4	33 5	35 6	37 7	39 8	41 9	44 0	45 0	45 0
DEBT SERVICE COVERAGE RATIO = ((1)-(6))/(7)					1 3	1 4	1 4	1 5	1 6	1 7	1 8	2 0	2 2	2 4	2 6	2 9		
PROJECT CASH FLOW = (1)-(2)-(3)-(4)-(6)-(8)		20 8	173 3	-43 4	71 1	71 1	62 8	62 1	61 4	60 7	60 0	59 3	58 6	57 9	57 2	56 5	56 1	56 1
FIRR	22 1%																	

TABLE B 2 11

YEREVAN POWER PLANT FEASIBILITY STUDY
FINANCIAL ANALYSIS-BASE CASE TARIFF = $0 045 / KWH

constant 1998 dollars

Net plant output (MW)	381 20	381 20	381 20	381 20	381 20	381 20	381 20	381 20	381 20	381 20	381 20
Capacity factor (/)	80 00	80 00	80 00	80 00	80 00	80 00	80 00	80 00	80 00	80 00	80 00
Trans & distr loss factor (/)	0 00	0 00	0 00	0 00	0 00	0 00	0 00	0 00	0 00	0 00	0 00
Tariff rate ($/MWh)	0 045	0 045	0 045	0 045	0 045	0 045	0 045	0 045	0 045	0 045	0 045
Fuel cost ($/GCAL)	8 81	8 81	8 81	8 81	8 81	8 81	8 81	8 81	8 81	8 81	8 81
Loan interest rate (/)	12 00	12 00	12 00	12 00	12 00	12 00	12 00	12 00	12 00	12 00	12 00
Fixed O&M cost ($/kW/y)	14 03	14 03	14 03	14 03	14 03	14 03	14 03	14 03	14 03	14 03	14 03
Variable O&M cost ($/MWh)	0 87	0 87	0 87	0 87	0 87	0 87	0 87	0 87	0 87	0 87	0 87
Annual depreciation (/)	4 00	4 00	4 00	4 00	4 00	4 00	4 00	4 00	4 00	4 00	4 00
Taxes (/)	25 00	25 00	25 00	25 00	25 00	25 00	25 00	25 00	25 00	25 00	25 00
YEARS	**2018**	**2019**	**2020**	**2021**	**2022**	**2023**	**2024**	**2025**	**2026**	**2027**	**2028**
REVENUES											
Net plant production (GWh)	2671 4	2671 4	2671 4	2671 4	2671 4	2671 4	2671 4	2671 4	2671 4	2671 4	2671 4
Trans & dist losses (GWh)	0 0	0 0	0 0	0 0	0 0	0 0	0 0	0 0	0 0	0 0	0 0
Energy sales (GWh)	2671 4	2671 4	2671 4	2671 4	2671 4	2671 4	2671 4	2671 4	2671 4	2671 4	2671 4
(1) Annual revenues ($M)	120 2	120 2	120 2	120 2	120 2	120 2	120 2	120 2	120 2	120 2	120 2
CAPITAL EXPENDITURES											
(2) EPC contractors cost ($M)											
(3) Other capital costs ($M)											
(4) Owner's cost ($M)											
(5) Interest During Construction											
OPERATING EXPENSES											
Fuel cost ($M)	41 4	41 4	41 4	41 4	41 4	41 4	41 4	41 4	41 4	41 4	41 4
Fixed O&M cost ($M)	5 3	5 3	5 3	5 3	5 3	5 3	5 3	5 3	5 3	5 3	5 3
Variable O&M cost ($M)	2 3	2 3	2 3	2 3	2 3	2 3	2 3	2 3	2 3	2 3	2 3
(6) Subtotal expenses ($M)	49 1	49 1	49 1	49 1	49 1	49 1	49 1	49 1	49 1	49 1	49 1
FINANCIAL											
Interest payment ($M)	0 0	0 0	0 0	0 0	0 0	0 0	0 0	0 0	0 0	0 0	0 0
Principal payment ($M)	0 0	0 0	0 0	0 0	0 0	0 0	0 0	0 0	0 0	0 0	0 0
(7) Subtotal ($M)	0 0	0 0	0 0	0 0	0 0	0 0	0 0	0 0	0 0	0 0	0 0
DEPRECIATION ($M)	11 1	11 1	11 1	11 1	11 1	11 1	11 1	11 1	11 1	11 1	11 1
PRETAX PROFITS ($M)	60 0	60 0	60 0	60 0	60 0	60 0	60 0	60 0	60 0	60 0	60 0
(8) TAXES ($M)	15 0	15 0	15 0	15 0	15 0	15 0	15 0	15 0	15 0	15 0	15 0
AFTER TAX PROFITS ($M)	45 0	45 0	45 0	45 0	45 0	45 0	45 0	45 0	45 0	45 0	45 0
DEBT SERVICE COVERAGE RATIO = ((1)-(6))/(7)											
PROJECT CASH FLOW = (1)-(2)-(3)-(4)-(6)-(8)	56 1	56 1	56 1	56 1	56 1	56 1	56 1	56 1	56 1	56 1	56 1

NOTES VAT is excluded
12% Interest Rate
12 Year Term
2 year grace period on taxes
Tariff is at plant meters
No T&D losses considered

160

TABLE B 2 12

YEREVAN POWER PLANT FEASIBILITY STUDY
FINANCIAL ANALYSIS-TARIFF = $0 03 / KWH

constant 1998 dollars

Net plant output (MW)	381 20	381 20	381 20	381 20	381 20	381 20	381 20	381 20	381 20	381 20	381 20	381 20	381 20	381 20	381 20	381 20	381 20	381 20
Capacity factor (/)	80 00	80 00	80 00	80 00	80 00	80 00	80 00	80 00	80 00	80 00	80 00	80 00	80 00	80 00	80 00	80 00	80 00	80 00
Trans & distr loss factor (/)	0 00	0 00	0 00	0 00	0 00	0 00	0 00	0 00	0 00	0 00	0 00	0 00	0 00	0 00	0 00	0 00	0 00	0 00
Tariff rate ($/MWh)	0 030	0 030	0 030	0 030	0 030	0 030	0 030	0 030	0 030	0 030	0 030	0 030	0 030	0 030	0 030	0 030	0 030	0 030
Fuel cost ($/GCAL)	8 81	8 81	8 81	8 81	8 81	8 81	8 81	8 81	8 81	8 81	8 81	8 81	8 81	8 81	8 81	8 81	8 81	8 81
Loan interest rate (/o)	12 00	12 00	12 00	12 00	12 00	12 00	12 00	12 00	12 00	12 00	12 00	12 00	12 00	12 00	12 00	12 00	12 00	12 00
Fixed O&M cost ($/kW/y)	0 00	0 00	0 00	0 00	14 03	14 03	14 03	14 03	14 03	14 03	14 03	14 03	14 03	14 03	14 03	14 03	14 03	14 03
Variable O&M cost ($/MWh)	0 00	0 00	0 00	0 00	0 87	0 87	0 87	0 87	0 87	0 87	0 87	0 87	0 87	0 87	0 87	0 87	0 87	0 87
Annual depreciation (/)	0 00	0 00	0 00	0 00	4 00	4 00	4 00	4 00	4 00	4 00	4 00	4 00	4 00	4 00	4 00	4 00	4 00	4 00
Taxes (/)	25 00	25 00	25 00	25 00	25 00	25 00	25 00	25 00	25 00	25 00	25 00	25 00	25 00	25 00	25 00	25 00	25 00	25 00
YEARS	**2000**	**2001**	**2002**	**2003**	**2004**	**2005**	**2006**	**2007**	**2008**	**2009**	**2010**	**2011**	**2012**	**2013**	**2014**	**2015**	**2016**	**2017**
REVENUES																		
Net plant production (GWh)	0 0	0 0	0 0	0 0	2671 4	2671 4	2671 4	2671 4	2671 4	2671 4	2671 4	2671 4	2671 4	2671 4	2671 4	2671 4	2671 4	2671 4
Trans & dist losses (GWh)					0 0	0 0	0 0	0 0	0 0	0 0	0 0	0 0	0 0	0 0	0 0	0 0	0 0	0 0
Energy sales (GWh)					2671 4	2671 4	2671 4	2671 4	2671 4	2671 4	2671 4	2671 4	2671 4	2671 4	2671 4	2671 4	2671 4	2671 4
(1) Annual revenues ($M)					80 1	80 1	80 1	80 1	80 1	80 1	80 1	80 1	80 1	80 1	80 1	80 1	80 1	80 1
CAPITAL EXPENDITURES																		
(2) EPC contractors cost ($M)		19 0	170 9	33 2														
(3) Other capital costs ($M)		0 0	0 0	0 0														
(4) Owner's cost ($M)		1 8	2 4	10 2														
(5) Interest During Construction		0 6	13 0	27 5														
OPERATING EXPENSES																		
Fuel cost ($M)					41 4	41 4	41 4	41 4	41 4	41 4	41 4	41 4	41 4	41 4	41 4	41 4	41 4	41 4
Fixed O&M cost ($M)					5 3	5 3	5 3	5 3	5 3	5 3	5 3	5 3	5 3	5 3	5 3	5 3	5 3	5 3
Variable O&M cost ($M)					2 3	2 3	2 3	2 3	2 3	2 3	2 3	2 3	2 3	2 3	2 3	2 3	2 3	2 3
(6) Subtotal expenses ($M)	0 0	0 0	0 0	0 0	49 1	49 1	49 1	49 1	49 1	49 1	49 1	49 1	49 1	49 1	49 1	49 1	49 1	49 1
FINANCIAL																		
Interest payment ($M)	0 0	1 2	13 0	27 5	32 0	29 3	26 5	23 7	20 9	18 1	15 3	12 5	9 8	7 0	4 2	1 4	0 0	0 0
Principal payment ($M)	0 0	0 0	0 0	0 0	23 2	23 2	23 2	23 2	23 2	23 2	23 2	23 2	23 2	23 2	23 2	23 2	0 0	0 0
(7) Subtotal ($M)	0 0	1 2	13 0	27 5	55 3	52 5	49 7	46 9	44 1	41 3	38 5	35 8	33 0	30 2	27 4	24 6	0 0	0 0
DEPRECIATION ($M)	0 0	0 0	0 0	0 0	11 1	11 1	11 1	11 1	11 1	11 1	11 1	11 1	11 1	11 1	11 1	11 1	11 1	11 1
PRETAX PROFITS ($M)	0 0	1 2	13 0	27 5	12 1	9 3	-6 5	3 8	1 0	1 8	4 6	7 4	10 2	13 0	15 7	18 5	19 9	19 9
(8) TAXES ($M)	0 0	0 0	0 0	0 0	0 0	0 0	1 6	-0 9	-0 2	0 5	1 2	1 8	2 5	3 2	3 9	4 6	5 0	5 0
AFTER TAX PROFITS ($M)	0 0	1 2	13 0	27 5	12 1	9 3	-4 9	2 8	-0 7	1 4	3 5	5 5	7 6	9 7	11 8	13 9	14 9	14 9
DEBT SERVICE COVERAGE RATIO = ((1)-(6))/(7)					0 6	0 6	0 6	0 7	0 7	0 8	0 8	0 9	0 9	1 0	1 1	1 3		
PROJECT CASH FLOW = (1)-(2)-(3)-(4)-(6)-(8)		20 8	173 3	-43 4	31 1	31 1	32 7	32 0	31 3	30 6	29 9	29 2	28 5	27 8	27 1	26 4	26 1	26 1
FIRR	10 3%																	

TABLE B 2 12

YEREVAN POWER PLANT FEASIBILITY STUDY
FINANCIAL ANALYSIS-TARIFF = $0 03 / KWH

constant 1998 dollars

Net plant output (MW)	381 20	381 20	381 20	381 20	381 20	381 20	381 20	381 20	381 20	381 20	381 20
Capacity factor (/)	80 00	80 00	80 00	80 00	80 00	80 00	80 00	80 00	80 00	80 00	80 00
Trans & distr loss factor (/)	0 00	0 00	0 00	0 00	0 00	0 00	0 00	0 00	0 00	0 00	0 00
Tariff rate ($/MWh)	0 030	0 030	0 030	0 030	0 030	0 030	0 030	0 030	0 030	0 030	0 030
Fuel cost ($/GCAL)	8 81	8 81	8 81	8 81	8 81	8 81	8 81	8 81	8 81	8 81	8 81
Loan interest rate (/)	12 00	12 00	12 00	12 00	12 00	12 00	12 00	12 00	12 00	12 00	12 00
Fixed O&M cost ($/kW/y)	14 03	14 03	14 03	14 03	14 03	14 03	14 03	14 03	14 03	14 03	14 03
Variable O&M cost ($/MWh)	0 87	0 87	0 87	0 87	0 87	0 87	0 87	0 87	0 87	0 87	0 87
Annual depreciation (/)	4 00	4 00	4 00	4 00	4 00	4 00	4 00	4 00	4 00	4 00	4 00
Taxes (/)	25 00	25 00	25 00	25 00	25 00	25 00	25 00	25 00	25 00	25 00	25 00
YEARS	**2018**	**2019**	**2020**	**2021**	**2022**	**2023**	**2024**	**2025**	**2026**	**2027**	**2028**
REVENUES											
Net plant production (GWh)	2671 4	2671 4	2671 4	2671 4	2671 4	2671 4	2671 4	2671 4	2671 4	2671 4	2671 4
Trans & dist losses (GWh)	0 0	0 0	0 0	0 0	0 0	0 0	0 0	0 0	0 0	0 0	0 0
Energy sales (GWh)	2671 4	2671 4	2671 4	2671 4	2671 4	2671 4	2671 4	2671 4	2671 4	2671 4	2671 4
(1) Annual revenues ($M)	80 1	80 1	80 1	80 1	80 1	80 1	80 1	80 1	80 1	80 1	80 1
CAPITAL EXPENDITURES											
(2) EPC contractors cost ($M)											
(3) Other capital costs ($M)											
(4) Owner's cost ($M)											
(5) Interest During Construction											
OPERATING EXPENSES											
Fuel cost ($M)	41 4	41 4	41 4	41 4	41 4	41 4	41 4	41 4	41 4	41 4	41 4
Fixed O&M cost ($M)	5 3	5 3	5 3	5 3	5 3	5 3	5 3	5 3	5 3	5 3	5 3
Variable O&M cost ($M)	2 3	2 3	2 3	2 3	2 3	2 3	2 3	2 3	2 3	2 3	2 3
(6) *Subtotal expenses ($M)*	49 1	49 1	49 1	49 1	49 1	49 1	49 1	49 1	49 1	49 1	49 1
FINANCIAL											
Interest payment ($M)	0 0	0 0	0 0	0 0	0 0	0 0	0 0	0 0	0 0	0 0	0 0
Principal payment ($M)	0 0	0 0	0 0	0 0	0 0	0 0	0 0	0 0	0 0	0 0	0 0
(7) Subtotal ($M)	0 0	0 0	0 0	0 0	0 0	0 0	0 0	0 0	0 0	0 0	0 0
DEPRECIATION ($M)	11 1	11 1	11 1	11 1	11 1	11 1	11 1	11 1	11 1	11 1	11 1
PRETAX PROFITS ($M)	19 9	19 9	19 9	19 9	19 9	19 9	19 9	19 9	19 9	19 9	19 9
(8) TAXES ($M)	5 0	5 0	5 0	5 0	5 0	5 0	5 0	5 0	5 0	5 0	5 0
AFTER TAX PROFITS ($M)	14 9	14 9	14 9	14 9	14 9	14 9	14 9	14 9	14 9	14 9	14 9
DEBT SERVICE COVERAGE RATIO = ((1)-(6))/(7)											
PROJECT CASH FLOW = (1)-(2)-(3)-(4)-(6)-(8)	26 1	26 1	26 1	26 1	26 1	26 1	26 1	26 1	26 1	26 1	26 1

NOTES VAT is excluded
12% Interest Rate
12 Year Term
2 year grace period on taxes
Tariff is at plant meters
No T&D losses considered

TABLE B 2 13

YEREVAN POWER PLANT FEASIBILITY STUDY
FINANCIAL ANALYSIS-TARIFF = $0 035 / KWH

constant 1998 dollars

Net plant output (MW)	381 20	381 20	381 20	381 20	381 20	381 20	381 20	381 20	381 20	381 20	381 20	381 20	381 20	381 20	381 20	381 20	381 20	381 20
Capacity factor (%)	80 00	80 00	80 00	80 00	80 00	80 00	80 00	80 00	80 00	80 00	80 00	80 00	80 00	80 00	80 00	80 00	80 00	80 00
Trans & distr loss factor (/)	0 00	0 00	0 00	0 00	0 00	0 00	0 00	0 00	0 00	0 00	0 00	0 00	0 00	0 00	0 00	0 00	0 00	0 00
Tariff rate ($/MWh)	0 035	0 035	0 035	0 035	0 035	0 035	0 035	0 035	0 035	0 035	0 035	0 035	0 035	0 035	0 035	0 035	0 035	0 035
Fuel cost ($/GCAL)	8 81	8 81	8 81	8 81	8 81	8 81	8 81	8 81	8 81	8 81	8 81	8 81	8 81	8 81	8 81	8 81	8 81	8 81
Loan interest rate (%)	12 00	12 00	12 00	12 00	12 00	12 00	12 00	12 00	12 00	12 00	12 00	12 00	12 00	12 00	12 00	12 00	12 00	12 00
Fixed O&M cost ($/kW/y)	0 00	0 00	0 00	0 00	14 03	14 03	14 03	14 03	14 03	14 03	14 03	14 03	14 03	14 03	14 03	14 03	14 03	14 03
Variable O&M cost ($/MWh)	0 00	0 00	0 00	0 00	0 87	0 87	0 87	0 87	0 87	0 87	0 87	0 87	0 87	0 87	0 87	0 87	0 87	0 87
Annual depreciation (/)	0 00	0 00	0 00	0 00	4 00	4 00	4 00	4 00	4 00	4 00	4 00	4 00	4 00	4 00	4 00	4 00	4 00	4 00
Taxes (/)	25 00	25 00	25 00	25 00	25 00	25 00	25 00	25 00	25 00	25 00	25 00	25 00	25 00	25 00	25 00	25 00	25 00	25 00
YEARS	**2000**	**2001**	**2002**	**2003**	**2004**	**2005**	**2006**	**2007**	**2008**	**2009**	**2010**	**2011**	**2012**	**2013**	**2014**	**2015**	**2016**	**2017**
REVENUES																		
Net plant production (GWh)	0 0	0 0	0 0	0 0	2671 4	2671 4	2671 4	2671 4	2671 4	2671 4	2671 4	2671 4	2671 4	2671 4	2671 4	2671 4	2671 4	2671 4
Trans & dist losses (GWh)					0 0	0 0	0 0	0 0	0 0	0 0	0 0	0 0	0 0	0 0	0 0	0 0	0 0	0 0
Energy sales (GWh)					2671 4	2671 4	2671 4	2671 4	2671 4	2671 4	2671 4	2671 4	2671 4	2671 4	2671 4	2671 4	2671 4	2671 4
(1) Annual revenues ($M)					93 5	93 5	93 5	93 5	93 5	93 5	93 5	93 5	93 5	93 5	93 5	93 5	93 5	93 5
CAPITAL EXPENDITURES																		
(2) EPC contractors cost ($M)		19 0	170 9	33 2														
(3) Other capital costs ($M)		0 0	0 0	0 0														
(4) Owner's cost ($M)		1 8	2 4	10 2														
(5) Interest During Construction		0 6	13 0	27 5														
OPERATING EXPENSES																		
Fuel cost ($M)					41 4	41 4	41 4	41 4	41 4	41 4	41 4	41 4	41 4	41 4	41 4	41 4	41 4	41 4
Fixed O&M cost ($M)					5 3	5 3	5 3	5 3	5 3	5 3	5 3	5 3	5 3	5 3	5 3	5 3	5 3	5 3
Variable O&M cost ($M)					2 3	2 3	2 3	2 3	2 3	2 3	2 3	2 3	2 3	2 3	2 3	2 3	2 3	2 3
(6) Subtotal expenses ($M)	0 0	0 0	0 0	0 0	49 1	49 1	49 1	49 1	49 1	49 1	49 1	49 1	49 1	49 1	49 1	49 1	49 1	49 1
FINANCIAL																		
Interest payment ($M)	0 0	1 2	13 0	27 5	32 0	29 3	26 5	23 7	20 9	18 1	15 3	12 5	9 8	7 0	4 2	1 4	0 0	0 0
Principal payment ($M)	0 0	0 0	0 0	0 0	23 2	23 2	23 2	23 2	23 2	23 2	23 2	23 2	23 2	23 2	23 2	23 2	0 0	0 0
(7) Subtotal ($M)	0 0	1 2	13 0	27 5	55 3	52 5	49 7	46 9	44 1	41 3	38 5	35 8	33 0	30 2	27 4	24 6	0 0	0 0
DEPRECIATION ($M)	0 0	0 0	0 0	0 0	11 1	11 1	11 1	11 1	11 1	11 1	11 1	11 1	11 1	11 1	11 1	11 1	11 1	11 1
PRETAX PROFITS ($M)	0 0	1 2	13 0	27 5	1 2	4 0	6 8	9 6	12 4	15 2	18 0	20 7	23 5	26 3	29 1	31 9	33 3	33 3
(8) TAXES ($M)	0 0	0 0	0 0	0 0	0 0	0 0	1 7	2 4	3 1	3 8	4 5	5 2	5 9	6 6	7 3	8 0	8 3	8 3
AFTER TAX PROFITS ($M)	0 0	1 2	13 0	27 5	1 2	4 0	5 1	7 2	9 3	11 4	13 5	15 6	17 7	19 7	21 8	23 9	25 0	25 0
DEBT SERVICE COVERAGE RATIO = ((1)-(6))/(7)					0 8	0 8	0 9	0 9	1 0	1 1	1 2	1 2	1 3	1 5	1 6	1 8		
PROJECT CASH FLOW = (1)-(2)-(3)-(4)-(6)-(8)		20 8	173 3	-43 4	44 4	44 4	42 7	42 0	41 3	40 6	39 9	39 2	38 5	37 8	37 2	36 5	36 1	36 1
FIRR	14 6%																	

163

TABLE B 2 13

YEREVAN POWER PLANT FEASIBILITY STUDY
FINANCIAL ANALYSIS-TARIFF = $0 035 / KWH

constant 1998 dollars

Net plant output (MW)	381 20	381 20	381 20	381 20	381 20	381 20	381 20	381 20	381 20	381 20	381 20
Capacity factor (/)	80 00	80 00	80 00	80 00	80 00	80 00	80 00	80 00	80 00	80 00	80 00
Trans & distr loss factor (/)	0 00	0 00	0 00	0 00	0 00	0 00	0 00	0 00	0 00	0 00	0 00
Tariff rate ($/MWh)	0 035	0 035	0 035	0 035	0 035	0 035	0 035	0 035	0 035	0 035	0 035
Fuel cost ($/GCAL)	8 81	8 81	8 81	8 81	8 81	8 81	8 81	8 81	8 81	8 81	8 81
Loan interest rate (/o)	12 00	12 00	12 00	12 00	12 00	12 00	12 00	12 00	12 00	12 00	12 00
Fixed O&M cost ($/kW/y)	14 03	14 03	14 03	14 03	14 03	14 03	14 03	14 03	14 03	14 03	14 03
Variable O&M cost ($/MWh)	0 87	0 87	0 87	0 87	0 87	0 87	0 87	0 87	0 87	0 87	0 87
Annual depreciation (/)	4 00	4 00	4 00	4 00	4 00	4 00	4 00	4 00	4 00	4 00	4 00
Taxes (%)	25 00	25 00	25 00	25 00	25 00	25 00	25 00	25 00	25 00	25 00	25 00
YEARS	**2018**	**2019**	**2020**	**2021**	**2022**	**2023**	**2024**	**2025**	**2026**	**2027**	**2028**
REVENUES											
Net plant production (GWh)	2671 4	2671 4	2671 4	2671 4	2671 4	2671 4	2671 4	2671 4	2671 4	2671 4	2671 4
Trans & dist losses (GWh)	0 0	0 0	0 0	0 0	0 0	0 0	0 0	0 0	0 0	0 0	0 0
Energy sales (GWh)	2671 4	2671 4	2671 4	2671 4	2671 4	2671 4	2671 4	2671 4	2671 4	2671 4	2671 4
(1) Annual revenues ($M)	93 5	93 5	93 5	93 5	93 5	93 5	93 5	93 5	93 5	93 5	93 5
CAPITAL EXPENDITURES											
(2) EPC contractors cost ($M)											
(3) Other capital costs ($M)											
(4) Owner's cost ($M)											
(5) Interest During Construction											
OPERATING EXPENSES											
Fuel cost ($M)	41 4	41 4	41 4	41 4	41 4	41 4	41 4	41 4	41 4	41 4	41 4
Fixed O&M cost ($M)	5 3	5 3	5 3	5 3	5 3	5 3	5 3	5 3	5 3	5 3	5 3
Variable O&M cost ($M)	2 3	2 3	2 3	2 3	2 3	2 3	2 3	2 3	2 3	2 3	2 3
(6) Subtotal expenses ($M)	49 1	49 1	49 1	49 1	49 1	49 1	49 1	49 1	49 1	49 1	49 1
FINANCIAL											
Interest payment ($M)	0 0	0 0	0 0	0 0	0 0	0 0	0 0	0 0	0 0	0 0	0 0
Principal payment ($M)	0 0	0 0	0 0	0 0	0 0	0 0	0 0	0 0	0 0	0 0	0 0
(7) Subtotal ($M)	0 0	0 0	0 0	0 0	0 0	0 0	0 0	0 0	0 0	0 0	0 0
DEPRECIATION ($M)	11 1	11 1	11 1	11 1	11 1	11 1	11 1	11 1	11 1	11 1	11 1
PRETAX PROFITS ($M)	33 3	33 3	33 3	33 3	33 3	33 3	33 3	33 3	33 3	33 3	33 3
(8) TAXES ($M)	8 3	8 3	8 3	8 3	8 3	8 3	8 3	8 3	8 3	8 3	8 3
AFTER TAX PROFITS ($M)	25 0	25 0	25 0	25 0	25 0	25 0	25 0	25 0	25 0	25 0	25 0
DEBT SERVICE COVERAGE RATIO = ((1)-(6))/(7)											
PROJECT CASH FLOW = (1)-(2)-(3)-(4)-(6)-(8)	36 1	36 1	36 1	36 1	36 1	36 1	36 1	36 1	36 1	36 1	36 1

NOTES VAT is excluded
12% Interest Rate
12 Year Term
2 year grace period on taxes
Tariff is at plant meters
No T&D losses considered

TABLE B 2 14

YEREVAN POWER PLANT FEASIBILITY STUDY
FINANCIAL ANALYSIS-TARIFF = $0 04 / KWH

constant 1998 dollars

Net plant output (MW)	381 20	381 20	381 20	381 20	381 20	381 20	381 20	381 20	381 20	381 20	381 20	381 20	381 20	381 20	381 20	381 20	381 20	381 20
Capacity factor (%)	80 00	80 00	80 00	80 00	80 00	80 00	80 00	80 00	80 00	80 00	80 00	80 00	80 00	80 00	80 00	80 00	80 00	80 00
Trans & distr loss factor (/)	0 00	0 00	0 00	0 00	0 00	0 00	0 00	0 00	0 00	0 00	0 00	0 00	0 00	0 00	0 00	0 00	0 00	0 00
Tariff rate ($/MWh)	0 040	0 040	0 040	0 040	0 040	0 040	0 040	0 040	0 040	0 040	0 040	0 040	0 040	0 040	0 040	0 040	0 040	0 040
Fuel cost ($/GCAL)	8 81	8 81	8 81	8 81	8 81	8 81	8 81	8 81	8 81	8 81	8 81	8 81	8 81	8 81	8 81	8 81	8 81	8 81
Loan interest rate (%)	12 00	12 00	12 00	12 00	12 00	12 00	12 00	12 00	12 00	12 00	12 00	12 00	12 00	12 00	12 00	12 00	12 00	12 00
Fixed O&M cost ($/kW/y)	0 00	0 00	0 00	0 00	14 03	14 03	14 03	14 03	14 03	14 03	14 03	14 03	14 03	14 03	14 03	14 03	14 03	14 03
Variable O&M cost ($/MWh)	0 00	0 00	0 00	0 00	0 87	0 87	0 87	0 87	0 87	0 87	0 87	0 87	0 87	0 87	0 87	0 87	0 87	0 87
Annual depreciation (%)	0 00	0 00	0 00	0 00	4 00	4 00	4 00	4 00	4 00	4 00	4 00	4 00	4 00	4 00	4 00	4 00	4 00	4 00
Taxes (/)	25 00	25 00	25 00	25 00	25 00	25 00	25 00	25 00	25 00	25 00	25 00	25 00	25 00	25 00	25 00	25 00	25 00	25 00
YEARS	**2000**	**2001**	**2002**	**2003**	**2004**	**2005**	**2006**	**2007**	**2008**	**2009**	**2010**	**2011**	**2012**	**2013**	**2014**	**2015**	**2016**	**2017**
REVENUES																		
Net plant production (GWh)	0 0	0 0	0 0	0 0	2671 4	2671 4	2671 4	2671 4	2671 4	2671 4	2671 4	2671 4	2671 4	2671 4	2671 4	2671 4	2671 4	2671 4
Trans & dist losses (GWh)					0 0	0 0	0 0	0 0	0 0	0 0	0 0	0 0	0 0	0 0	0 0	0 0	0 0	0 0
Energy sales (GWh)					2671 4	2671 4	2671 4	2671 4	2671 4	2671 4	2671 4	2671 4	2671 4	2671 4	2671 4	2671 4	2671 4	2671 4
(1) Annual revenues ($M)					106 9	106 9	106 9	106 9	106 9	106 9	106 9	106 9	106 9	106 9	106 9	106 9	106 9	106 9
CAPITAL EXPENDITURES																		
(2) EPC contractors cost ($M)		19 0	170 9	33 2														
(3) Other capital costs ($M)		0 0	0 0	0 0														
(4) Owner's cost ($M)		1 8	2 4	10 2														
(5) Interest During Construction		0 6	13 0	27 5														
OPERATING EXPENSES																		
Fuel cost ($M)					41 4	41 4	41 4	41 4	41 4	41 4	41 4	41 4	41 4	41 4	41 4	41 4	41 4	41 4
Fixed O&M cost ($M)					5 3	5 3	5 3	5 3	5 3	5 3	5 3	5 3	5 3	5 3	5 3	5 3	5 3	5 3
Variable O&M cost ($M)					2 3	2 3	2 3	2 3	2 3	2 3	2 3	2 3	2 3	2 3	2 3	2 3	2 3	2 3
(6) Subtotal expenses ($M)	0 0	0 0	0 0	0 0	49 1	49 1	49 1	49 1	49 1	49 1	49 1	49 1	49 1	49 1	49 1	49 1	49 1	49 1
FINANCIAL																		
Interest payment ($M)	0 0	1 2	13 0	27 5	32 0	29 3	26 5	23 7	20 9	18 1	15 3	12 5	9 8	7 0	4 2	1 4	0 0	0 0
Principal payment ($M)	0 0	0 0	0 0	0 0	23 2	23 2	23 2	23 2	23 2	23 2	23 2	23 2	23 2	23 2	23 2	23 2	0 0	0 0
(7) Subtotal ($M)	0 0	1 2	13 0	27 5	55 3	52 5	49 7	46 9	44 1	41 3	38 5	35 8	33 0	30 2	27 4	24 6	0 0	0 0
DEPRECIATION ($M)	0 0	0 0	0 0	0 0	11 1	11 1	11 1	11 1	11 1	11 1	11 1	11 1	11 1	11 1	11 1	11 1	11 1	11 1
PRETAX PROFITS ($M)	0 0	1 2	13 0	27 5	14 6	17 4	20 2	23 0	25 7	28 5	31 3	34 1	36 9	39 7	42 5	45 2	46 6	46 6
(8) TAXES ($M)	0 0	0 0	0 0	0 0	0 0	0 0	5 0	5 7	6 4	7 1	7 8	8 5	9 2	9 9	10 6	11 3	11 7	11 7
AFTER TAX PROFITS ($M)	0 0	1 2	13 0	27 5	14 6	17 4	15 1	17 2	19 3	21 4	23 5	25 6	27 7	29 8	31 8	33 9	35 0	35 0
DEBT SERVICE COVERAGE RATIO = ((1)-(6))/(7)					1 0	1 1	1 2	1 2	1 3	1 4	1 5	1 6	1 8	1 9	2 1	2 3		
PROJECT CASH FLOW = (1)-(2)-(3)-(4)-(6)-(8)		20 8	173 3	-43 4	57 8	57 8	52 7	52 0	51 4	50 7	50 0	49 3	48 6	47 9	47 2	46 5	46 1	46 1
FIRR	18 5%																	

TABLE B 2 14

YEREVAN POWER PLANT FEASIBILITY STUDY
FINANCIAL ANALYSIS-TARIFF = $0 04 / KWH

constant 1998 dollars

Net plant output (MW)	381 20	381 20	381 20	381 20	381 20	381 20	381 20	381 20	381 20	381 20	381 20
Capacity factor (/)	80 00	80 00	80 00	80 00	80 00	80 00	80 00	80 00	80 00	80 00	80 00
Trans & distr loss factor (/)	0 00	0 00	0 00	0 00	0 00	0 00	0 00	0 00	0 00	0 00	0 00
Tariff rate ($/MWh)	0 040	0 040	0 040	0 040	0 040	0 040	0 040	0 040	0 040	0 040	0 040
Fuel cost ($/GCAL)	8 81	8 81	8 81	8 81	8 81	8 81	8 81	8 81	8 81	8 81	8 81
Loan interest rate (/)	12 00	12 00	12 00	12 00	12 00	12 00	12 00	12 00	12 00	12 00	12 00
Fixed O&M cost ($/kW/y)	14 03	14 03	14 03	14 03	14 03	14 03	14 03	14 03	14 03	14 03	14 03
Variable O&M cost ($/MWh)	0 87	0 87	0 87	0 87	0 87	0 87	0 87	0 87	0 87	0 87	0 87
Annual depreciation (/)	4 00	4 00	4 00	4 00	4 00	4 00	4 00	4 00	4 00	4 00	4 00
Taxes (/)	25 00	25 00	25 00	25 00	25 00	25 00	25 00	25 00	25 00	25 00	25 00
YEARS	**2018**	**2019**	**2020**	**2021**	**2022**	**2023**	**2024**	**2025**	**2026**	**2027**	**2028**
REVENUES											
Net plant production (GWh)	2671 4	2671 4	2671 4	2671 4	2671 4	2671 4	2671 4	2671 4	2671 4	2671 4	2671 4
Trans & dist losses (GWh)	0 0	0 0	0 0	0 0	0 0	0 0	0 0	0 0	0 0	0 0	0 0
Energy sales (GWh)	2671 4	2671 4	2671 4	2671 4	2671 4	2671 4	2671 4	2671 4	2671 4	2671 4	2671 4
(1) Annual revenues ($M)	106 9	106 9	106 9	106 9	106 9	106 9	106 9	106 9	106 9	106 9	106 9
CAPITAL EXPENDITURES											
(2) EPC contractors cost ($M)											
(3) Other capital costs ($M)											
(4) Owner's cost ($M)											
(5) Interest During Construction											
OPERATING EXPENSES											
Fuel cost ($M)	41 4	41 4	41 4	41 4	41 4	41 4	41 4	41 4	41 4	41 4	41 4
Fixed O&M cost ($M)	5 3	5 3	5 3	5 3	5 3	5 3	5 3	5 3	5 3	5 3	5 3
Variable O&M cost ($M)	2 3	2 3	2 3	2 3	2 3	2 3	2 3	2 3	2 3	2 3	2 3
(6) Subtotal expenses ($M)	49 1	49 1	49 1	49 1	49 1	49 1	49 1	49 1	49 1	49 1	49 1
FINANCIAL											
Interest payment ($M)	0 0	0 0	0 0	0 0	0 0	0 0	0 0	0 0	0 0	0 0	0 0
Principal payment ($M)	0 0	0 0	0 0	0 0	0 0	0 0	0 0	0 0	0 0	0 0	0 0
(7) Subtotal ($M)	0 0	0 0	0 0	0 0	0 0	0 0	0 0	0 0	0 0	0 0	0 0
DEPRECIATION ($M)	11 1	11 1	11 1	11 1	11 1	11 1	11 1	11 1	11 1	11 1	11 1
PRETAX PROFITS ($M)	46 6	46 6	46 6	46 6	46 6	46 6	46 6	46 6	46 6	46 6	46 6
(8) TAXES ($M)	11 7	11 7	11 7	11 7	11 7	11 7	11 7	11 7	11 7	11 7	11 7
AFTER TAX PROFITS ($M)	35 0	35 0	35 0	35 0	35 0	35 0	35 0	35 0	35 0	35 0	35 0
DEBT SERVICE COVERAGE RATIO = ((1)-(6))/(7)											
PROJECT CASH FLOW = (1)-(2)-(3)-(4)-(6)-(8)	46 1	46 1	46 1	46 1	46 1	46 1	46 1	46 1	46 1	46 1	46 1

NOTES VAT is excluded
12% Interest Rate
12 Year Term
2 year grace period on taxes
Tariff is at plant meters
No T&D losses considered

TABLE B 2 15

YEREVAN POWER PLANT FEASIBILITY STUDY
FINANCIAL ANALYSIS-TARIFF = $0 05 / KWH

constant 1998 dollars

Net plant output (MW)	381 20	381 20	381 20	381 20	381 20	381 20	381 20	381 20	381 20	381 20	381 20	381 20	381 20	381 20	381 20	381 20	381 20	381 20
Capacity factor (/)	80 00	80 00	80 00	80 00	80 00	80 00	80 00	80 00	80 00	80 00	80 00	80 00	80 00	80 00	80 00	80 00	80 00	80 00
Trans & distr loss factor (/)	0 00	0 00	0 00	0 00	0 00	0 00	0 00	0 00	0 00	0 00	0 00	0 00	0 00	0 00	0 00	0 00	0 00	0 00
Tariff rate ($/MWh)	0 050	0 050	0 050	0 050	0 050	0 050	0 050	0 050	0 050	0 050	0 050	0 050	0 050	0 050	0 050	0 050	0 050	0 050
Fuel cost ($/GCAL)	8 81	8 81	8 81	8 81	8 81	8 81	8 81	8 81	8 81	8 81	8 81	8 81	8 81	8 81	8 81	8 81	8 81	8 81
Loan interest rate (%)	12 00	12 00	12 00	12 00	12 00	12 00	12 00	12 00	12 00	12 00	12 00	12 00	12 00	12 00	12 00	12 00	12 00	12 00
Fixed O&M cost ($/kW/y)	0 00	0 00	0 00	0 00	14 03	14 03	14 03	14 03	14 03	14 03	14 03	14 03	14 03	14 03	14 03	14 03	14 03	14 03
Variable O&M cost ($/MWh)	0 00	0 00	0 00	0 00	0 87	0 87	0 87	0 87	0 87	0 87	0 87	0 87	0 87	0 87	0 87	0 87	0 87	0 87
Annual depreciation (%)	0 00	0 00	0 00	0 00	4 00	4 00	4 00	4 00	4 00	4 00	4 00	4 00	4 00	4 00	4 00	4 00	4 00	4 00
Taxes (/)	25 00	25 00	25 00	25 00	25 00	25 00	25 00	25 00	25 00	25 00	25 00	25 00	25 00	25 00	25 00	25 00	25 00	25 00
YEARS	**2000**	**2001**	**2002**	**2003**	**2004**	**2005**	**2006**	**2007**	**2008**	**2009**	**2010**	**2011**	**2012**	**2013**	**2014**	**2015**	**2016**	**2017**
REVENUES																		
Net plant production (GWh)	0 0	0 0	0 0	0 0	2671 4	2671 4	2671 4	2671 4	2671 4	2671 4	2671 4	2671 4	2671 4	2671 4	2671 4	2671 4	2671 4	2671 4
Trans & dist losses (GWh)					0 0	0 0	0 0	0 0	0 0	0 0	0 0	0 0	0 0	0 0	0 0	0 0	0 0	0 0
Energy sales (GWh)					2671 4	2671 4	2671 4	2671 4	2671 4	2671 4	2671 4	2671 4	2671 4	2671 4	2671 4	2671 4	2671 4	2671 4
(1) Annual revenues ($M)					133 6	133 6	133 6	133 6	133 6	133 6	133 6	133 6	133 6	133 6	133 6	133 6	133 6	133 6
CAPITAL EXPENDITURES																		
(2) EPC contractors cost ($M)		19 0	170 9	33 2														
(3) Other capital costs ($M)		0 0	0 0	0 0														
(4) Owner's cost ($M)		1 8	2 4	10 2														
(5) Interest During Construction		0 6	13 0	27 5														
OPERATING EXPENSES																		
Fuel cost ($M)					41 4	41 4	41 4	41 4	41 4	41 4	41 4	41 4	41 4	41 4	41 4	41 4	41 4	41 4
Fixed O&M cost ($M)					5 3	5 3	5 3	5 3	5 3	5 3	5 3	5 3	5 3	5 3	5 3	5 3	5 3	5 3
Variable O&M cost ($M)					2 3	2 3	2 3	2 3	2 3	2 3	2 3	2 3	2 3	2 3	2 3	2 3	2 3	2 3
(6) *Subtotal expenses* ($M)	0 0	0 0	0 0	0 0	49 1	49 1	49 1	49 1	49 1	49 1	49 1	49 1	49 1	49 1	49 1	49 1	49 1	49 1
FINANCIAL																		
Interest payment ($M)	0 0	1 2	13 0	27 5	32 0	29 3	26 5	23 7	20 9	18 1	15 3	12 5	9 8	7 0	4 2	1 4	0 0	0 0
Principal payment ($M)	0 0	0 0	0 0	0 0	23 2	23 2	23 2	23 2	23 2	23 2	23 2	23 2	23 2	23 2	23 2	23 2	0 0	0 0
(7) Subtotal ($M)	0 0	1 2	13 0	27 5	55 3	52 5	49 7	46 9	44 1	41 3	38 5	35 8	33 0	30 2	27 4	24 6	0 0	0 0
DEPRECIATION ($M)	0 0	0 0	0 0	0 0	11 1	11 1	11 1	11 1	11 1	11 1	11 1	11 1	11 1	11 1	11 1	11 1	11 1	11 1
PRETAX PROFITS ($M)	0 0	1 2	13 0	27 5	41 3	44 1	46 9	49 7	52 5	55 2	58 0	60 8	63 6	66 4	69 2	72 0	73 4	73 4
(8) TAXES ($M)	0 0	0 0	0 0	0 0	0 0	0 0	11 7	12 4	13 1	13 8	14 5	15 2	15 9	16 6	17 3	18 0	18 3	18 3
AFTER TAX PROFITS ($M)	0 0	1 2	13 0	27 5	41 3	44 1	35 2	37 3	39 3	41 4	43 5	45 6	47 7	49 8	51 9	54 0	55 0	55 0
DEBT SERVICE COVERAGE RATIO = ((1)-(6))/(7)					1 5	1 6	1 7	1 8	1 9	2 0	2 2	2 4	2 6	2 8	3 1	3 4		
PROJECT CASH FLOW = (1)-(2)-(3)-(4)-(6)-(8)		20 8	173 3	-43 4	84 5	84 5	72 8	72 1	71 4	70 7	70 0	69 3	68 6	67 9	67 2	66 5	66 2	66 2
FIRR	25 6%																	

TABLE B 2 15

YEREVAN POWER PLANT FEASIBILITY STUDY
FINANCIAL ANALYSIS-TARIFF = $0 05 / KWH

constant 1998 dollars

Net plant output (MW)	381 20	381 20	381 20	381 20	381 20	381 20	381 20	381 20	381 20	381 20	381 20
Capacity factor (%)	80 00	80 00	80 00	80 00	80 00	80 00	80 00	80 00	80 00	80 00	80 00
Trans & distr loss factor (%)	0 00	0 00	0 00	0 00	0 00	0 00	0 00	0 00	0 00	0 00	0 00
Tariff rate ($/MWh)	0 050	0 050	0 050	0 050	0 050	0 050	0 050	0 050	0 050	0 050	0 050
Fuel cost ($/GCAL)	8 81	8 81	8 81	8 81	8 81	8 81	8 81	8 81	8 81	8 81	8 81
Loan interest rate (%)	12 00	12 00	12 00	12 00	12 00	12 00	12 00	12 00	12 00	12 00	12 00
Fixed O&M cost ($/kW/y)	14 03	14 03	14 03	14 03	14 03	14 03	14 03	14 03	14 03	14 03	14 03
Variable O&M cost ($/MWh)	0 87	0 87	0 87	0 87	0 87	0 87	0 87	0 87	0 87	0 87	0 87
Annual depreciation (%)	4 00	4 00	4 00	4 00	4 00	4 00	4 00	4 00	4 00	4 00	4 00
Taxes (%)	25 00	25 00	25 00	25 00	25 00	25 00	25 00	25 00	25 00	25 00	25 00
YEARS	**2018**	**2019**	**2020**	**2021**	**2022**	**2023**	**2024**	**2025**	**2026**	**2027**	**2028**
REVENUES											
Net plant production (GWh)	2671 4	2671 4	2671 4	2671 4	2671 4	2671 4	2671 4	2671 4	2671 4	2671 4	2671 4
Trans & dist losses (GWh)	0 0	0 0	0 0	0 0	0 0	0 0	0 0	0 0	0 0	0 0	0 0
Energy sales (GWh)	2671 4	2671 4	2671 4	2671 4	2671 4	2671 4	2671 4	2671 4	2671 4	2671 4	2671 4
(1) Annual revenues ($M)	133 6	133 6	133 6	133 6	133 6	133 6	133 6	133 6	133 6	133 6	133 6
CAPITAL EXPENDITURES											
(2) EPC contractors cost ($M)											
(3) Other capital costs ($M)											
(4) Owner's cost ($M)											
(5) Interest During Construction											
OPERATING EXPENSES											
Fuel cost ($M)	41 4	41 4	41 4	41 4	41 4	41 4	41 4	41 4	41 4	41 4	41 4
Fixed O&M cost ($M)	5 3	5 3	5 3	5 3	5 3	5 3	5 3	5 3	5 3	5 3	5 3
Variable O&M cost ($M)	2 3	2 3	2 3	2 3	2 3	2 3	2 3	2 3	2 3	2 3	2 3
(6) Subtotal expenses ($M)	49 1	49 1	49 1	49 1	49 1	49 1	49 1	49 1	49 1	49 1	49 1
FINANCIAL											
Interest payment ($M)	0 0	0 0	0 0	0 0	0 0	0 0	0 0	0 0	0 0	0 0	0 0
Principal payment ($M)	0 0	0 0	0 0	0 0	0 0	0 0	0 0	0 0	0 0	0 0	0 0
(7) Subtotal ($M)	0 0	0 0	0 0	0 0	0 0	0 0	0 0	0 0	0 0	0 0	0 0
DEPRECIATION ($M)	11 1	11 1	11 1	11 1	11 1	11 1	11 1	11 1	11 1	11 1	11 1
PRETAX PROFITS ($M)	73 4	73 4	73 4	73 4	73 4	73 4	73 4	73 4	73 4	73 4	73 4
(8) TAXES ($M)	18 3	18 3	18 3	18 3	18 3	18 3	18 3	18 3	18 3	18 3	18 3
AFTER TAX PROFITS ($M)	55 0	55 0	55 0	55 0	55 0	55 0	55 0	55 0	55 0	55 0	55 0
DEBT SERVICE COVERAGE RATIO = ((1)-(6))/(7)											
PROJECT CASH FLOW = (1)-(2)-(3)-(4)-(6)-(8)	66 2	66 2	66 2	66 2	66 2	66 2	66 2	66 2	66 2	66 2	66 2

NOTES VAT is excluded
12% Interest Rate
12 Year Term
2 year grace period on taxes
Tariff is at plant meters
No T&D losses considered

TABLE B 2 16

YEREVAN POWER PLANT FEASIBILITY STUDY
FINANCIAL ANALYSIS-BASE CASE TARIFF & CAPITAL COSTS +10%

constant 1998 dollars

Net plant output (MW)	381 20	381 20	381 20	381 20	381 20	381 20	381 20	381 20	381 20	381 20	381 20	381 20	381 20	381 20	381 20	381 20	381 20	381 20
Capacity factor (/)	80 00	80 00	80 00	80 00	80 00	80 00	80 00	80 00	80 00	80 00	80 00	80 00	80 00	80 00	80 00	80 00	80 00	80 00
Trans & distr loss factor (/)	0 00	0 00	0 00	0 00	0 00	0 00	0 00	0 00	0 00	0 00	0 00	0 00	0 00	0 00	0 00	0 00	0 00	0 00
Tariff rate ($/MWh)	0 045	0 045	0 045	0 045	0 045	0 045	0 045	0 045	0 045	0 045	0 045	0 045	0 045	0 045	0 045	0 045	0 045	0 045
Fuel cost ($/GCAL)	8 81	8 81	8 81	8 81	8 81	8 81	8 81	8 81	8 81	8 81	8 81	8 81	8 81	8 81	8 81	8 81	8 81	8 81
Loan interest rate (/)	12 00	12 00	12 00	12 00	12 00	12 00	12 00	12 00	12 00	12 00	12 00	12 00	12 00	12 00	12 00	12 00	12 00	12 00
Fixed O&M cost ($/kW/y)	0 00	0 00	0 00	0 00	14 03	14 03	14 03	14 03	14 03	14 03	14 03	14 03	14 03	14 03	14 03	14 03	14 03	14 03
Variable O&M cost ($/MWh)	0 00	0 00	0 00	0 00	0 87	0 87	0 87	0 87	0 87	0 87	0 87	0 87	0 87	0 87	0 87	0 87	0 87	0 87
Annual depreciation (/)	0 00	0 00	0 00	0 00	4 00	4 00	4 00	4 00	4 00	4 00	4 00	4 00	4 00	4 00	4 00	4 00	4 00	4 00
Taxes (/)	25 00	25 00	25 00	25 00	25 00	25 00	25 00	25 00	25 00	25 00	25 00	25 00	25 00	25 00	25 00	25 00	25 00	25 00
YEARS	**2000**	**2001**	**2002**	**2003**	**2004**	**2005**	**2006**	**2007**	**2008**	**2009**	**2010**	**2011**	**2012**	**2013**	**2014**	**2015**	**2016**	**2017**
REVENUES																		
Net plant production (GWh)	0 0	0 0	0 0	0 0	2671 4	2671 4	2671 4	2671 4	2671 4	2671 4	2671 4	2671 4	2671 4	2671 4	2671 4	2671 4	2671 4	2671 4
Trans & dist losses (GWh)					0 0	0 0	0 0	0 0	0 0	0 0	0 0	0 0	0 0	0 0	0 0	0 0	0 0	0 0
Energy sales (GWh)					2671 4	2671 4	2671 4	2671 4	2671 4	2671 4	2671 4	2671 4	2671 4	2671 4	2671 4	2671 4	2671 4	2671 4
(1) Annual revenues ($M)					120 2	120 2	120 2	120 2	120 2	120 2	120 2	120 2	120 2	120 2	120 2	120 2	120 2	120 2
CAPITAL EXPENDITURES																		
(2) EPC contractors cost ($M)		20 9	188 0	36 6														
(3) Other capital costs ($M)		0 0	0 0	0 0														
(4) Owner's cost ($M)		2 0	2 6	11 2														
(5) Interest During Construction		0 7	14 3	30 3														
OPERATING EXPENSES																		
Fuel cost ($M)					41 4	41 4	41 4	41 4	41 4	41 4	41 4	41 4	41 4	41 4	41 4	41 4	41 4	41 4
Fixed O&M cost ($M)					5 3	5 3	5 3	5 3	5 3	5 3	5 3	5 3	5 3	5 3	5 3	5 3	5 3	5 3
Variable O&M cost ($M)					2 3	2 3	2 3	2 3	2 3	2 3	2 3	2 3	2 3	2 3	2 3	2 3	2 3	2 3
(6) Subtotal expenses ($M)	0 0	0 0	0 0	0 0	49 1	49 1	49 1	49 1	49 1	49 1	49 1	49 1	49 1	49 1	49 1	49 1	49 1	49 1
FINANCIAL																		
Interest payment ($M)	0 0	1 4	14 3	30 3	35 2	32 2	29 1	26 1	23 0	19 9	16 9	13 8	10 7	7 7	4 6	1 5	0 0	0 0
Principal payment ($M)	0 0	0 0	0 0	0 0	25 5	25 5	25 5	25 5	25 5	25 5	25 5	25 5	25 5	25 5	25 5	25 5	0 0	0 0
(7) Subtotal ($M)	0 0	1 4	14 3	30 3	60 8	57 7	54 7	51 6	48 5	45 5	42 4	39 3	36 3	33 2	30 1	27 1	0 0	0 0
DEPRECIATION ($M)	0 0	0 0	0 0	0 0	12 3	12 3	12 3	12 3	12 3	12 3	12 3	12 3	12 3	12 3	12 3	12 3	12 3	12 3
PRETAX PROFITS ($M)	0 0	1 4	14 3	30 3	23 6	26 7	29 8	32 8	35 9	39 0	42 0	45 1	48 2	51 2	54 3	57 4	58 9	58 9
(8) TAXES ($M)	0 0	0 0	0 0	0 0	0 0	0 0	7 4	8 2	9 0	9 7	10 5	11 3	12 0	12 8	13 6	14 3	14 7	14 7
AFTER TAX PROFITS ($M)	0 0	1 4	14 3	30 3	23 6	26 7	22 3	24 6	26 9	29 2	31 5	33 8	36 1	38 4	40 7	43 0	44 2	44 2
DEBT SERVICE COVERAGE RATIO = ((1)-(6))/(7)					1 2	1 2	1 3	1 4	1 5	1 6	1 7	1 8	2 0	2 1	2 4	2 6		
PROJECT CASH FLOW = (1)-(2)-(3)-(4)-(6)-(8)		22 8	190 6	-47 8	71 1	71 1	63 7	62 9	62 2	61 4	60 6	59 9	59 1	58 3	57 6	56 8	56 4	56 4
FIRR	20 4%																	

TABLE B 2 16

YEREVAN POWER PLANT FEASIBILITY STUDY
FINANCIAL ANALYSIS-BASE CASE TARIFF & CAPITAL COSTS +10%

constant 1998 dollars

Net plant output (MW)	381 20	381 20	381 20	381 20	381 20	381 20	381 20	381 20	381 20	381 20	381 20
Capacity factor (/)	80 00	80 00	80 00	80 00	80 00	80 00	80 00	80 00	80 00	80 00	80 00
Trans & distr loss factor (/)	0 00	0 00	0 00	0 00	0 00	0 00	0 00	0 00	0 00	0 00	0 00
Tariff rate ($/MWh)	0 045	0 045	0 045	0 045	0 045	0 045	0 045	0 045	0 045	0 045	0 045
Fuel cost ($/GCAL)	8 81	8 81	8 81	8 81	8 81	8 81	8 81	8 81	8 81	8 81	8 81
Loan interest rate (/o)	12 00	12 00	12 00	12 00	12 00	12 00	12 00	12 00	12 00	12 00	12 00
Fixed O&M cost ($/kW/y)	14 03	14 03	14 03	14 03	14 03	14 03	14 03	14 03	14 03	14 03	14 03
Variable O&M cost ($/MWh)	0 87	0 87	0 87	0 87	0 87	0 87	0 87	0 87	0 87	0 87	0 87
Annual depreciation (/)	4 00	4 00	4 00	4 00	4 00	4 00	4 00	4 00	4 00	4 00	4 00
Taxes (/)	25 00	25 00	25 00	25 00	25 00	25 00	25 00	25 00	25 00	25 00	25 00
YEARS	**2018**	**2019**	**2020**	**2021**	**2022**	**2023**	**2024**	**2025**	**2026**	**2027**	**2028**
REVENUES											
Net plant production (GWh)	2671 4	2671 4	2671 4	2671 4	2671 4	2671 4	2671 4	2671 4	2671 4	2671 4	2671 4
Trans & dist losses (GWh)	0 0	0 0	0 0	0 0	0 0	0 0	0 0	0 0	0 0	0 0	0 0
Energy sales (GWh)	2671 4	2671 4	2671 4	2671 4	2671 4	2671 4	2671 4	2671 4	2671 4	2671 4	2671 4
(1) Annual revenues ($M)	120 2	120 2	120 2	120 2	120 2	120 2	120 2	120 2	120 2	120 2	120 2
CAPITAL EXPENDITURES											
(2) EPC contractors cost ($M)											
(3) Other capital costs ($M)											
(4) Owner's cost ($M)											
(5) Interest During Construction											
OPERATING EXPENSES											
Fuel cost ($M)	41 4	41 4	41 4	41 4	41 4	41 4	41 4	41 4	41 4	41 4	41 4
Fixed O&M cost ($M)	5 3	5 3	5 3	5 3	5 3	5 3	5 3	5 3	5 3	5 3	5 3
Variable O&M cost ($M)	2 3	2 3	2 3	2 3	2 3	2 3	2 3	2 3	2 3	2 3	2 3
(6) Subtotal expenses ($M)	49 1	49 1	49 1	49 1	49 1	49 1	49 1	49 1	49 1	49 1	49 1
FINANCIAL											
Interest payment ($M)	0 0	0 0	0 0	0 0	0 0	0 0	0 0	0 0	0 0	0 0	0 0
Principal payment ($M)	0 0	0 0	0 0	0 0	0 0	0 0	0 0	0 0	0 0	0 0	0 0
(7) Subtotal ($M)	0 0	0 0	0 0	0 0	0 0	0 0	0 0	0 0	0 0	0 0	0 0
DEPRECIATION ($M)	12 3	12 3	12 3	12 3	12 3	12 3	12 3	12 3	12 3	12 3	12 3
PRETAX PROFITS ($M)	58 9	58 9	58 9	58 9	58 9	58 9	58 9	58 9	58 9	58 9	58 9
(8) TAXES ($M)	14 7	14 7	14 7	14 7	14 7	14 7	14 7	14 7	14 7	14 7	14 7
AFTER TAX PROFITS ($M)	44 2	44 2	44 2	44 2	44 2	44 2	44 2	44 2	44 2	44 2	44 2
DEBT SERVICE COVERAGE RATIO = ((1)-(6))/(7)											
PROJECT CASH FLOW = (1)-(2)-(3)-(4)-(6)-(8)	56 4	56 4	56 4	56 4	56 4	56 4	56 4	56 4	56 4	56 4	56 4

NOTES VAT is excluded
12% Interest Rate
12 Year Term
2 year grace period on taxes
Tariff is at plant meters
No T&D losses considered

TABLE B 2 17

YEREVAN POWER PLANT FEASIBILITY STUDY
FINANCIAL ANALYSIS-BASE CASE TARIFF & CAPITAL COSTS -10%

constant 1998 dollars

Net plant output (MW)	381 20	381 20	381 20	381 20	381 20	381 20	381 20	381 20	381 20	381 20	381 20	381 20	381 20	381 20	381 20	381 20	381 20	381 20
Capacity factor (%)	80 00	80 00	80 00	80 00	80 00	80 00	80 00	80 00	80 00	80 00	80 00	80 00	80 00	80 00	80 00	80 00	80 00	80 00
Trans & distr loss factor (/)	0 00	0 00	0 00	0 00	0 00	0 00	0 00	0 00	0 00	0 00	0 00	0 00	0 00	0 00	0 00	0 00	0 00	0 00
Tariff rate ($/MWh)	0 045	0 045	0 045	0 045	0 045	0 045	0 045	0 045	0 045	0 045	0 045	0 045	0 045	0 045	0 045	0 045	0 045	0 045
Fuel cost ($/GCAL)	8 81	8 81	8 81	8 81	8 81	8 81	8 81	8 81	8 81	8 81	8 81	8 81	8 81	8 81	8 81	8 81	8 81	8 81
Loan interest rate (/)	12 00	12 00	12 00	12 00	12 00	12 00	12 00	12 00	12 00	12 00	12 00	12 00	12 00	12 00	12 00	12 00	12 00	12 00
Fixed O&M cost ($/kW/y)	0 00	0 00	0 00	0 00	14 03	14 03	14 03	14 03	14 03	14 03	14 03	14 03	14 03	14 03	14 03	14 03	14 03	14 03
Variable O&M cost ($/MWh)	0 00	0 00	0 00	0 00	0 87	0 87	0 87	0 87	0 87	0 87	0 87	0 87	0 87	0 87	0 87	0 87	0 87	0 87
Annual depreciation (/)	0 00	0 00	0 00	0 00	4 00	4 00	4 00	4 00	4 00	4 00	4 00	4 00	4 00	4 00	4 00	4 00	4 00	4 00
Taxes (/)	25 00	25 00	25 00	25 00	25 00	25 00	25 00	25 00	25 00	25 00	25 00	25 00	25 00	25 00	25 00	25 00	25 00	25 00
YEARS	**2000**	**2001**	**2002**	**2003**	**2004**	**2005**	**2006**	**2007**	**2008**	**2009**	**2010**	**2011**	**2012**	**2013**	**2014**	**2015**	**2016**	**2017**
REVENUES																		
Net plant production (GWh)	0 0	0 0	0 0	0 0	2671 4	2671 4	2671 4	2671 4	2671 4	2671 4	2671 4	2671 4	2671 4	2671 4	2671 4	2671 4	2671 4	2671 4
Trans & dist losses (GWh)					0 0	0 0	0 0	0 0	0 0	0 0	0 0	0 0	0 0	0 0	0 0	0 0	0 0	0 0
Energy sales (GWh)					2671 4	2671 4	2671 4	2671 4	2671 4	2671 4	2671 4	2671 4	2671 4	2671 4	2671 4	2671 4	2671 4	2671 4
(1) Annual revenues ($M)					120 2	120 2	120 2	120 2	120 2	120 2	120 2	120 2	120 2	120 2	120 2	120 2	120 2	120 2
CAPITAL EXPENDITURES																		
(2) EPC contractors cost ($M)		17 1	153 8	29 9														
(3) *Other capital costs* ($M)		0 0	0 0	0 0														
(4) Owner's cost ($M)		1 6	2 2	9 2														
(5) Interest During Construction		0 6	11 7	24 8														
OPERATING EXPENSES																		
Fuel cost ($M)					41 4	41 4	41 4	41 4	41 4	41 4	41 4	41 4	41 4	41 4	41 4	41 4	41 4	41 4
Fixed O&M cost ($M)					5 3	5 3	5 3	5 3	5 3	5 3	5 3	5 3	5 3	5 3	5 3	5 3	5 3	5 3
Variable O&M cost ($M)					2 3	2 3	2 3	2 3	2 3	2 3	2 3	2 3	2 3	2 3	2 3	2 3	2 3	2 3
(6) Subtotal expenses ($M)	0 0	0 0	0 0	0 0	49 1	49 1	49 1	49 1	49 1	49 1	49 1	49 1	49 1	49 1	49 1	49 1	49 1	49 1
FINANCIAL																		
Interest payment ($M)	0 0	1 1	11 7	24 8	28 8	26 3	23 8	21 3	18 8	16 3	13 8	11 3	8 8	6 3	3 8	1 3	0 0	0 0
Principal payment ($M)	0 0	0 0	0 0	0 0	20 9	20 9	20 9	20 9	20 9	20 9	20 9	20 9	20 9	20 9	20 9	20 9	0 0	0 0
(7) Subtotal ($M)	0 0	1 1	11 7	24 8	49 7	47 2	44 7	42 2	39 7	37 2	34 7	32 2	29 7	27 2	24 7	22 1	0 0	0 0
DEPRECIATION ($M)	0 0	0 0	0 0	0 0	10 0	10 0	10 0	10 0	10 0	10 0	10 0	10 0	10 0	10 0	10 0	10 0	10 0	10 0
PRETAX PROFITS ($M)	0 0	1 1	11 7	24 8	32 3	34 8	37 3	39 8	42 3	44 8	47 3	49 8	52 3	54 8	57 4	59 9	61 1	61 1
(8) TAXES ($M)	0 0	0 0	0 0	0 0	0 0	0 0	9 3	10 0	10 6	11 2	11 8	12 5	13 1	13 7	14 3	15 0	15 3	15 3
AFTER TAX PROFITS ($M)	0 0	1 1	11 7	24 8	32 3	34 8	28 0	29 9	31 7	33 6	35 5	37 4	39 3	41 1	43 0	44 9	45 8	45 8
DEBT SERVICE COVERAGE RATIO = ((1)-(6))/(7)					1 4	1 5	1 6	1 7	1 8	1 9	2 1	2 2	2 4	2 6	2 9	3 2		
PROJECT CASH FLOW = (1)-(2)-(3)-(4)-(6)-(8)		18 7	156 0	39 1	71 1	71 1	61 8	61 2	60 6	59 9	59 3	58 7	58 1	57 4	56 8	56 2	55 9	55 9
FIRR	24 2%																	

171

TABLE B 2 17

YEREVAN POWER PLANT FEASIBILITY STUDY
FINANCIAL ANALYSIS-BASE CASE TARIFF & CAPITAL COSTS -10%

constant 1998 dollars

Net plant output (MW)	381 20	381 20	381 20	381 20	381 20	381 20	381 20	381 20	381 20	381 20	381 20
Capacity factor (/)	80 00	80 00	80 00	80 00	80 00	80 00	80 00	80 00	80 00	80 00	80 00
Trans & distr loss factor (/)	0 00	0 00	0 00	0 00	0 00	0 00	0 00	0 00	0 00	0 00	0 00
Tariff rate ($/MWh)	0 045	0 045	0 045	0 045	0 045	0 045	0 045	0 045	0 045	0 045	0 045
Fuel cost ($/GCAL)	8 81	8 81	8 81	8 81	8 81	8 81	8 81	8 81	8 81	8 81	8 81
Loan interest rate (/o)	12 00	12 00	12 00	12 00	12 00	12 00	12 00	12 00	12 00	12 00	12 00
Fixed O&M cost ($/kW/y)	14 03	14 03	14 03	14 03	14 03	14 03	14 03	14 03	14 03	14 03	14 03
Variable O&M cost ($/MWh)	0 87	0 87	0 87	0 87	0 87	0 87	0 87	0 87	0 87	0 87	0 87
Annual depreciation (/)	4 00	4 00	4 00	4 00	4 00	4 00	4 00	4 00	4 00	4 00	4 00
Taxes (/)	25 00	25 00	25 00	25 00	25 00	25 00	25 00	25 00	25 00	25 00	25 00
YEARS	**2018**	**2019**	**2020**	**2021**	**2022**	**2023**	**2024**	**2025**	**2026**	**2027**	**2028**
REVENUES											
Net plant production (GWh)	2671 4	2671 4	2671 4	2671 4	2671 4	2671 4	2671 4	2671 4	2671 4	2671 4	2671 4
Trans & dist losses (GWh)	0 0	0 0	0 0	0 0	0 0	0 0	0 0	0 0	0 0	0 0	0 0
Energy sales (GWh)	2671 4	2671 4	2671 4	2671 4	2671 4	2671 4	2671 4	2671 4	2671 4	2671 4	2671 4
(1) Annual revenues ($M)	120 2	120 2	120 2	120 2	120 2	120 2	120 2	120 2	120 2	120 2	120 2
CAPITAL EXPENDITURES											
(2) EPC contractors cost ($M)											
(3) Other capital costs ($M)											
(4) Owner's cost ($M)											
(5) Interest During Construction											
OPERATING EXPENSES											
Fuel cost ($M)	41 4	41 4	41 4	41 4	41 4	41 4	41 4	41 4	41 4	41 4	41 4
Fixed O&M cost ($M)	5 3	5 3	5 3	5 3	5 3	5 3	5 3	5 3	5 3	5 3	5 3
Variable O&M cost ($M)	2 3	2 3	2 3	2 3	2 3	2 3	2 3	2 3	2 3	2 3	2 3
(6) Subtotal expenses ($M)	49 1	49 1	49 1	49 1	49 1	49 1	49 1	49 1	49 1	49 1	49 1
FINANCIAL											
Interest payment ($M)	0 0	0 0	0 0	0 0	0 0	0 0	0 0	0 0	0 0	0 0	0 0
Principal payment ($M)	0 0	0 0	0 0	0 0	0 0	0 0	0 0	0 0	0 0	0 0	0 0
(7) Subtotal ($M)	0 0	0 0	0 0	0 0	0 0	0 0	0 0	0 0	0 0	0 0	0 0
DEPRECIATION ($M)	10 0	10 0	10 0	10 0	10 0	10 0	10 0	10 0	10 0	10 0	10 0
PRETAX PROFITS ($M)	61 1	61 1	61 1	61 1	61 1	61 1	61 1	61 1	61 1	61 1	61 1
(8) TAXES ($M)	15 3	15 3	15 3	15 3	15 3	15 3	15 3	15 3	15 3	15 3	15 3
AFTER TAX PROFITS ($M)	45 8	45 8	45 8	45 8	45 8	45 8	45 8	45 8	45 8	45 8	45 8
DEBT SERVICE COVERAGE RATIO = ((1)-(6))/(7)											
PROJECT CASH FLOW = (1)-(2)-(3)-(4)-(6)-(8)	55 9	55 9	55 9	55 9	55 9	55 9	55 9	55 9	55 9	55 9	55 9

NOTES VAT is excluded
12% Interest Rate
12 Year Term
2 year grace period on taxes
Tariff is at plant meters
No T&D losses considered

172

TABLE B 2 18

YEREVAN POWER PLANT FEASIBILITY STUDY
FINANCIAL ANALYSIS-BASE CASE TARIFF & GAS PRICE +10%

constant 1998 dollars

Net plant output (MW)	381 20	381 20	381 20	381 20	381 20	381 20	381 20	381 20	381 20	381 20	381 20	381 20	381 20	381 20	381 20	381 20	381 20	381 20
Capacity factor (/)	80 00	80 00	80 00	80 00	80 00	80 00	80 00	80 00	80 00	80 00	80 00	80 00	80 00	80 00	80 00	80 00	80 00	80 00
Trans & distr loss factor (/)	0 00	0 00	0 00	0 00	0 00	0 00	0 00	0 00	0 00	0 00	0 00	0 00	0 00	0 00	0 00	0 00	0 00	0 00
Tariff rate ($/MWh)	0 045	0 045	0 045	0 045	0 045	0 045	0 045	0 045	0 045	0 045	0 045	0 045	0 045	0 045	0 045	0 045	0 045	0 045
Fuel cost ($/GCAL)	9 69	9 69	9 69	9 69	9 69	9 69	9 69	9 69	9 69	9 69	9 69	9 69	9 69	9 69	9 69	9 69	9 69	9 69
Loan interest rate (%)	12 00	12 00	12 00	12 00	12 00	12 00	12 00	12 00	12 00	12 00	12 00	12 00	12 00	12 00	12 00	12 00	12 00	12 00
Fixed O&M cost ($/kW/y)	0 00	0 00	0 00	0 00	14 03	14 03	14 03	14 03	14 03	14 03	14 03	14 03	14 03	14 03	14 03	14 03	14 03	14 03
Variable O&M cost ($/MWh)	0 00	0 00	0 00	0 00	0 87	0 87	0 87	0 87	0 87	0 87	0 87	0 87	0 87	0 87	0 87	0 87	0 87	0 87
Annual depreciation (/)	0 00	0 00	0 00	0 00	4 00	4 00	4 00	4 00	4 00	4 00	4 00	4 00	4 00	4 00	4 00	4 00	4 00	4 00
Taxes (/)	25 00	25 00	25 00	25 00	25 00	25 00	25 00	25 00	25 00	25 00	25 00	25 00	25 00	25 00	25 00	25 00	25 00	25 00
YEARS	**2000**	**2001**	**2002**	**2003**	**2004**	**2005**	**2006**	**2007**	**2008**	**2009**	**2010**	**2011**	**2012**	**2013**	**2014**	**2015**	**2016**	**2017**
REVENUES																		
Net plant production (GWh)	0 0	0 0	0 0	0 0	2671 4	2671 4	2671 4	2671 4	2671 4	2671 4	2671 4	2671 4	2671 4	2671 4	2671 4	2671 4	2671 4	2671 4
Trans & dist losses (GWh)					0 0	0 0	0 0	0 0	0 0	0 0	0 0	0 0	0 0	0 0	0 0	0 0	0 0	0 0
Energy sales (GWh)					2671 4	2671 4	2671 4	2671 4	2671 4	2671 4	2671 4	2671 4	2671 4	2671 4	2671 4	2671 4	2671 4	2671 4
(1) Annual revenues ($M)					120 2	120 2	120 2	120 2	120 2	120 2	120 2	120 2	120 2	120 2	120 2	120 2	120 2	120 2
CAPITAL EXPENDITURES																		
(2) EPC contractors cost ($M)		19 0	170 9	33 2														
(3) Other capital costs ($M)		0 0	0 0	0 0														
(4) Owner's cost ($M)		1 8	2 4	10 2														
(5) Interest During Construction		0 6	13 0	27 5														
OPERATING EXPENSES																		
Fuel cost ($M)					45 5	45 5	45 5	45 5	45 5	45 5	45 5	45 5	45 5	45 5	45 5	45 5	45 5	45 5
Fixed O&M cost ($M)					5 3	5 3	5 3	5 3	5 3	5 3	5 3	5 3	5 3	5 3	5 3	5 3	5 3	5 3
Variable O&M cost ($M)					2 3	2 3	2 3	2 3	2 3	2 3	2 3	2 3	2 3	2 3	2 3	2 3	2 3	2 3
(6) Subtotal expenses ($M)	0 0	0 0	0 0	0 0	53 2	53 2	53 2	53 2	53 2	53 2	53 2	53 2	53 2	53 2	53 2	53 2	53 2	53 2
FINANCIAL																		
Interest payment ($M)	0 0	1 2	13 0	27 5	32 0	29 3	26 5	23 7	20 9	18 1	15 3	12 5	9 8	7 0	4 2	1 4	0 0	0 0
Principal payment ($M)	0 0	0 0	0 0	0 0	23 2	23 2	23 2	23 2	23 2	23 2	23 2	23 2	23 2	23 2	23 2	23 2	0 0	0 0
(7) Subtotal ($M)	0 0	1 2	13 0	27 5	55 3	52 5	49 7	46 9	44 1	41 3	38 5	35 8	33 0	30 2	27 4	24 6	0 0	0 0
DEPRECIATION ($M)	0 0	0 0	0 0	0 0	11 1	11 1	11 1	11 1	11 1	11 1	11 1	11 1	11 1	11 1	11 1	11 1	11 1	11 1
PRETAX PROFITS ($M)	0 0	1 2	13 0	27 5	23 8	26 6	29 4	32 2	35 0	37 7	40 5	43 3	46 1	48 9	51 7	54 5	55 9	55 9
(8) TAXES ($M)	0 0	0 0	0 0	0 0	0 0	0 0	7 3	8 0	8 7	9 4	10 1	10 8	11 5	12 2	12 9	13 6	14 0	14 0
AFTER TAX PROFITS ($M)	0 0	1 2	13 0	27 5	23 8	26 6	22 0	24 1	26 2	28 3	30 4	32 5	34 6	36 7	38 8	40 8	41 9	41 9
DEBT SERVICE COVERAGE RATIO = ((1)-(6))/(7)					1 2	1 3	1 3	1 4	1 5	1 6	1 7	1 9	2 0	2 2	2 4	2 7		
PROJECT CASH FLOW = (1)-(2)-(3)-(4)-(6)-(8)		20 8	173 3	-43 4	67 0	67 0	59 7	59 0	58 3	57 6	56 9	56 2	55 5	54 8	54 1	53 4	53 0	53 0
FIRR	21 0 /																	

122

TABLE B 2 18

YEREVAN POWER PLANT FEASIBILITY STUDY
FINANCIAL ANALYSIS-BASE CASE TARIFF & GAS PRICE +10%

constant 1998 dollars

Net plant output (MW)	381 20	381 20	381 20	381 20	381 20	381 20	381 20	381 20	381 20	381 20	381 20
Capacity factor (/)	80 00	80 00	80 00	80 00	80 00	80 00	80 00	80 00	80 00	80 00	80 00
Trans & distr loss factor (/)	0 00	0 00	0 00	0 00	0 00	0 00	0 00	0 00	0 00	0 00	0 00
Tariff rate ($/MWh)	0 045	0 045	0 045	0 045	0 045	0 045	0 045	0 045	0 045	0 045	0 045
Fuel cost ($/GCAL)	9 69	9 69	9 69	9 69	9 69	9 69	9 69	9 69	9 69	9 69	9 69
Loan interest rate (/)	12 00	12 00	12 00	12 00	12 00	12 00	12 00	12 00	12 00	12 00	12 00
Fixed O&M cost ($/kW/y)	14 03	14 03	14 03	14 03	14 03	14 03	14 03	14 03	14 03	14 03	14 03
Variable O&M cost ($/MWh)	0 87	0 87	0 87	0 87	0 87	0 87	0 87	0 87	0 87	0 87	0 87
Annual depreciation (/)	4 00	4 00	4 00	4 00	4 00	4 00	4 00	4 00	4 00	4 00	4 00
Taxes (/)	25 00	25 00	25 00	25 00	25 00	25 00	25 00	25 00	25 00	25 00	25 00
YEARS	**2018**	**2019**	**2020**	**2021**	**2022**	**2023**	**2024**	**2025**	**2026**	**2027**	**2028**
REVENUES											
Net plant production (GWh)	2671 4	2671 4	2671 4	2671 4	2671 4	2671 4	2671 4	2671 4	2671 4	2671 4	2671 4
Trans & dist losses (GWh)	0 0	0 0	0 0	0 0	0 0	0 0	0 0	0 0	0 0	0 0	0 0
Energy sales (GWh)	2671 4	2671 4	2671 4	2671 4	2671 4	2671 4	2671 4	2671 4	2671 4	2671 4	2671 4
(1) Annual revenues ($M)	120 2	120 2	120 2	120 2	120 2	120 2	120 2	120 2	120 2	120 2	120 2
CAPITAL EXPENDITURES											
(2) EPC contractors cost ($M)											
(3) Other capital costs ($M)											
(4) Owner's cost ($M)											
(5) Interest During Construction											
OPERATING EXPENSES											
Fuel cost ($M)	45 5	45 5	45 5	45 5	45 5	45 5	45 5	45 5	45 5	45 5	45 5
Fixed O&M cost ($M)	5 3	5 3	5 3	5 3	5 3	5 3	5 3	5 3	5 3	5 3	5 3
Variable O&M cost ($M)	2 3	2 3	2 3	2 3	2 3	2 3	2 3	2 3	2 3	2 3	2 3
(6) Subtotal expenses ($M)	53 2	53 2	53 2	53 2	53 2	53 2	53 2	53 2	53 2	53 2	53 2
FINANCIAL											
Interest payment ($M)	0 0	0 0	0 0	0 0	0 0	0 0	0 0	0 0	0 0	0 0	0 0
Principal payment ($M)	0 0	0 0	0 0	0 0	0 0	0 0	0 0	0 0	0 0	0 0	0 0
(7) Subtotal ($M)	0 0	0 0	0 0	0 0	0 0	0 0	0 0	0 0	0 0	0 0	0 0
DEPRECIATION ($M)	11 1	11 1	11 1	11 1	11 1	11 1	11 1	11 1	11 1	11 1	11 1
PRETAX PROFITS ($M)	55 9	55 9	55 9	55 9	55 9	55 9	55 9	55 9	55 9	55 9	55 9
(8) TAXES ($M)	14 0	14 0	14 0	14 0	14 0	14 0	14 0	14 0	14 0	14 0	14 0
AFTER TAX PROFITS ($M)	41 9	41 9	41 9	41 9	41 9	41 9	41 9	41 9	41 9	41 9	41 9
DEBT SERVICE COVERAGE RATIO = ((1)-(6))/(7)											
PROJECT CASH FLOW = (1)-(2)-(3)-(4)-(6)-(8)	53 0	53 0	53 0	53 0	53 0	53 0	53 0	53 0	53 0	53 0	53 0

NOTES VAT is excluded
12% Interest Rate
12 Year Term
2 year grace period on taxes
Tariff is at plant meters
No T&D losses considered

TABLE B 2 19

YEREVAN POWER PLANT FEASIBILITY STUDY
FINANCIAL ANALYSIS-BASE CASE TARIFF & GAS PRICE -10%

constant 1998 dollars

Net plant output (MW)	381 20	381 20	381 20	381 20	381 20	381 20	381 20	381 20	381 20	381 20	381 20	381 20	381 20	381 20	381 20	381 20	381 20	381 20
Capacity factor (%)	80 00	80 00	80 00	80 00	80 00	80 00	80 00	80 00	80 00	80 00	80 00	80 00	80 00	80 00	80 00	80 00	80 00	80 00
Trans & distr loss factor (%)	0 00	0 00	0 00	0 00	0 00	0 00	0 00	0 00	0 00	0 00	0 00	0 00	0 00	0 00	0 00	0 00	0 00	0 00
Tariff rate ($/MWh)	0 045	0 045	0 045	0 045	0 045	0 045	0 045	0 045	0 045	0 045	0 045	0 045	0 045	0 045	0 045	0 045	0 045	0 045
Fuel cost ($/GCAL)	7 93	7 93	7 93	7 93	7 93	7 93	7 93	7 93	7 93	7 93	7 93	7 93	7 93	7 93	7 93	7 93	7 93	7 93
Loan interest rate (%)	12 00	12 00	12 00	12 00	12 00	12 00	12 00	12 00	12 00	12 00	12 00	12 00	12 00	12 00	12 00	12 00	12 00	12 00
Fixed O&M cost ($/kW/y)	0 00	0 00	0 00	0 00	14 03	14 03	14 03	14 03	14 03	14 03	14 03	14 03	14 03	14 03	14 03	14 03	14 03	14 03
Variable O&M cost ($/MWh)	0 00	0 00	0 00	0 00	0 87	0 87	0 87	0 87	0 87	0 87	0 87	0 87	0 87	0 87	0 87	0 87	0 87	0 87
Annual depreciation (%)	0 00	0 00	0 00	0 00	4 00	4 00	4 00	4 00	4 00	4 00	4 00	4 00	4 00	4 00	4 00	4 00	4 00	4 00
Taxes (%)	25 00	25 00	25 00	25 00	25 00	25 00	25 00	25 00	25 00	25 00	25 00	25 00	25 00	25 00	25 00	25 00	25 00	25 00
YEARS	**2000**	**2001**	**2002**	**2003**	**2004**	**2005**	**2006**	**2007**	**2008**	**2009**	**2010**	**2011**	**2012**	**2013**	**2014**	**2015**	**2016**	**2017**
REVENUES																		
Net plant production (GWh)	0 0	0 0	0 0	0 0	2671 4	2671 4	2671 4	2671 4	2671 4	2671 4	2671 4	2671 4	2671 4	2671 4	2671 4	2671 4	2671 4	2671 4
Trans & dist losses (GWh)					0 0	0 0	0 0	0 0	0 0	0 0	0 0	0 0	0 0	0 0	0 0	0 0	0 0	0 0
Energy sales (GWh)					2671 4	2671 4	2671 4	2671 4	2671 4	2671 4	2671 4	2671 4	2671 4	2671 4	2671 4	2671 4	2671 4	2671 4
(1) Annual revenues ($M)					120 2	120 2	120 2	120 2	120 2	120 2	120 2	120 2	120 2	120 2	120 2	120 2	120 2	120 2
CAPITAL EXPENDITURES																		
(2) EPC contractors cost ($M)		19 0	170 9	33 2														
(3) Other capital costs ($M)		0 0	0 0	0 0														
(4) Owner's cost ($M)		1 8	2 4	10 2														
(5) Interest During Construction		0 6	13 0	27 5														
OPERATING EXPENSES																		
Fuel cost ($M)					37 3	37 3	37 3	37 3	37 3	37 3	37 3	37 3	37 3	37 3	37 3	37 3	37 3	37 3
Fixed O&M cost ($M)					5 3	5 3	5 3	5 3	5 3	5 3	5 3	5 3	5 3	5 3	5 3	5 3	5 3	5 3
Variable O&M cost ($M)					2 3	2 3	2 3	2 3	2 3	2 3	2 3	2 3	2 3	2 3	2 3	2 3	2 3	2 3
(6) Subtotal expenses ($M)	0 0	0 0	0 0	0 0	44 9	44 9	44 9	44 9	44 9	44 9	44 9	44 9	44 9	44 9	44 9	44 9	44 9	44 9
FINANCIAL																		
Interest payment ($M)	0 0	1 2	13 0	27 5	32 0	29 3	26 5	23 7	20 9	18 1	15 3	12 5	9 8	7 0	4 2	1 4	0 0	0 0
Principal payment ($M)	0 0	0 0	0 0	0 0	23 2	23 2	23 2	23 2	23 2	23 2	23 2	23 2	23 2	23 2	23 2	23 2	0 0	0 0
(7) Subtotal ($M)	0 0	1 2	13 0	27 5	55 3	52 5	49 7	46 9	44 1	41 3	38 5	35 8	33 0	30 2	27 4	24 6	0 0	0 0
DEPRECIATION ($M)	0 0	0 0	0 0	0 0	11 1	11 1	11 1	11 1	11 1	11 1	11 1	11 1	11 1	11 1	11 1	11 1	11 1	11 1
PRETAX PROFITS ($M)	0 0	1 2	13 0	27 5	32 1	34 9	37 7	40 5	43 2	46 0	48 8	51 6	54 4	57 2	60 0	62 7	64 1	64 1
(8) TAXES ($M)	0 0	0 0	0 0	0 0	0 0	0 0	9 4	10 1	10 8	11 5	12 2	12 9	13 6	14 3	15 0	15 7	16 0	16 0
AFTER TAX PROFITS ($M)	0 0	1 2	13 0	27 5	32 1	34 9	28 3	30 3	32 4	34 5	36 6	38 7	40 8	42 9	45 0	47 1	48 1	48 1
DEBT SERVICE COVERAGE RATIO = ((1)-(6))/(7)					1 4	1 4	1 5	1 6	1 7	1 8	2 0	2 1	2 3	2 5	2 7	3 1		
PROJECT CASH FLOW = (1)-(2)-(3)-(4)-(5)-(8)		20 8	173 3	-43 4	75 3	75 3	65 9	65 2	64 5	63 8	63 1	62 4	61 7	61 0	60 3	59 6	59 2	59 2
FIRR	23 2%																	

TABLE B 2 19

YEREVAN POWER PLANT FEASIBILITY STUDY
FINANCIAL ANALYSIS-BASE CASE TARIFF & GAS PRICE -10%

constant 1998 dollars

Net plant output (MW)	381 20	381 20	381 20	381 20	381 20	381 20	381 20	381 20	381 20	381 20	381 20
Capacity factor (%)	80 00	80 00	80 00	80 00	80 00	80 00	80 00	80 00	80 00	80 00	80 00
Trans & distr loss factor (/)	0 00	0 00	0 00	0 00	0 00	0 00	0 00	0 00	0 00	0 00	0 00
Tariff rate ($/MWh)	0 045	0 045	0 045	0 045	0 045	0 045	0 045	0 045	0 045	0 045	0 045
Fuel cost ($/GCAL)	7 93	7 93	7 93	7 93	7 93	7 93	7 93	7 93	7 93	7 93	7 93
Loan interest rate (/)	12 00	12 00	12 00	12 00	12 00	12 00	12 00	12 00	12 00	12 00	12 00
Fixed O&M cost ($/kW/y)	14 03	14 03	14 03	14 03	14 03	14 03	14 03	14 03	14 03	14 03	14 03
Variable O&M cost ($/MWh)	0 87	0 87	0 87	0 87	0 87	0 87	0 87	0 87	0 87	0 87	0 87
Annual depreciation (/)	4 00	4 00	4 00	4 00	4 00	4 00	4 00	4 00	4 00	4 00	4 00
Taxes (%)	25 00	25 00	25 00	25 00	25 00	25 00	25 00	25 00	25 00	25 00	25 00
YEARS	**2018**	**2019**	**2020**	**2021**	**2022**	**2023**	**2024**	**2025**	**2026**	**2027**	**2028**
REVENUES											
Net plant production (GWh)	2671 4	2671 4	2671 4	2671 4	2671 4	2671 4	2671 4	2671 4	2671 4	2671 4	2671 4
Trans & dist losses (GWh)	0 0	0 0	0 0	0 0	0 0	0 0	0 0	0 0	0 0	0 0	0 0
Energy sales (GWh)	2671 4	2671 4	2671 4	2671 4	2671 4	2671 4	2671 4	2671 4	2671 4	2671 4	2671 4
(1) Annual revenues ($M)	120 2	120 2	120 2	120 2	120 2	120 2	120 2	120 2	120 2	120 2	120 2
CAPITAL EXPENDITURES											
(2) EPC contractors cost ($M)											
(3) Other capital costs ($M)											
(4) Owner's cost ($M)											
(5) Interest During Construction											
OPERATING EXPENSES											
Fuel cost ($M)	37 3	37 3	37 3	37 3	37 3	37 3	37 3	37 3	37 3	37 3	37 3
Fixed O&M cost ($M)	5 3	5 3	5 3	5 3	5 3	5 3	5 3	5 3	5 3	5 3	5 3
Variable O&M cost ($M)	2 3	2 3	2 3	2 3	2 3	2 3	2 3	2 3	2 3	2 3	2 3
(6) Subtotal expenses ($M)	44 9	44 9	44 9	44 9	44 9	44 9	44 9	44 9	44 9	44 9	44 9
FINANCIAL											
Interest payment ($M)	0 0	0 0	0 0	0 0	0 0	0 0	0 0	0 0	0 0	0 0	0 0
Principal payment ($M)	0 0	0 0	0 0	0 0	0 0	0 0	0 0	0 0	0 0	0 0	0 0
(7) Subtotal ($M)	0 0	0 0	0 0	0 0	0 0	0 0	0 0	0 0	0 0	0 0	0 0
DEPRECIATION ($M)	11 1	11 1	11 1	11 1	11 1	11 1	11 1	11 1	11 1	11 1	11 1
PRETAX PROFITS ($M)	64 1	64 1	64 1	64 1	64 1	64 1	64 1	64 1	64 1	64 1	64 1
(8) TAXES ($M)	16 0	16 0	16 0	16 0	16 0	16 0	16 0	16 0	16 0	16 0	16 0
AFTER TAX PROFITS ($M)	48 1	48 1	48 1	48 1	48 1	48 1	48 1	48 1	48 1	48 1	48 1
DEBT SERVICE COVERAGE RATIO = ((1)-(6))/(7)											
PROJECT CASH FLOW = (1)-(2)-(3)-(4)-(6)-(8)	59 2	59 2	59 2	59 2	59 2	59 2	59 2	59 2	59 2	59 2	59 2

NOTES VAT is excluded
12% Interest Rate
12 Year Term
2 year grace period on taxes
Tariff is at plant meters
No T&D losses considered

Table B 2 - 20

Sensitivity Cases

Financial Analysis

Parameter	Value	FIRR (%)	DSC	Table
Base Case - Tariff = $0 045/kWhr - Capital Cost = $237 5 MM - Gas Price = $8 81/Gcal	-	22 1	1 3 - 2 9	B 2-11
Tariff	$0 030 /kWhr	10 3	0 6 - 1 3	B 2-12
	$0 035 /kWhr	14 6	0 8 - 1 8	B 2-13
	$0 040 /kWhr	18 5	1 0 - 2 3	B 2-14
	$0 050 /kWhr	25 6	1 5 - 3 4	B 2-15
Total Capital Cost	+10%	20 4	1 2 - 2 6	B 2-16
	-10%	24 2	1 4 - 3 2	B 2-17
Gas Price	+10%	21 0	1 2 - 2 7	B 2-18
	-10%	23 2	1 4 - 3 1	B 2-19

TABLE B 2-21 BASE CASE

9/11/98 14 47
H \Etd\Carol\Goodman\ECOCB4WB xls

INPUT DATA AND ASSUMPTIONS

Yerevan Capital Cost million $US		237 5
Capital Cost Expenditure Schedule / /yr		
	Year 1	0 00
	Year 2	8 76
	Year 3	72 97
	Year 4	18 27
Commercial Operation Date	Jan 2004	
Plant Life years	35	

Fuel Prices		Ratio
Natural Gas $/Gcal	8 81	
Mazut $/Gcal	13 11	148 8 /

Net Plant Capacity,MW	
Yerevan Combined Cycle Plant	381 2
Existing Yerevan Plant (2x150 MW)	300

Net Plant Heat Rates, Kcal/Kwh	Kcal/Kwh	Btu/Kwh
Yerevan Combined Cycle Plant	1 759	6976
Existing Yerevan Plant	2 992	11866
Existing Mazut/Gas Fired Plants	2 992	11866
Existing / age of Firing on Mazut	12	
Existing / age of Firing on Gas	88	

Capacity Factors, %	
Yerevan Combined Cycle Plant	80
Existing Yerevan Plants	70

	SO2	NOX	CO2	Part
Emission Values ($/ton)	400	250	7	100
Emission Rates (kg/hr)				
Yerevan Combined Cycle Plant	0	117	104 167	0
Existing Yerevan Plant (2x150 MW)	270	780	221 476	420

YEAR	CAPITAL COST $ MILLIONS	FUEL COST $ MILLIONS "WITH PROJECT" YEREVAN CC	"WITHOUT PROJECT" OLD YEREVAN	OTHER GAS/MAZUT FIRED UNITS	TOTAL	BENEFITS $ MILLIONS DIFFERENTIAL FUEL COST	AIR EMISSION REDUCTION NOX	CO2	SO2	Part	TOTAL	NET BENEFITS $ MILLIONS
2000	0 0										0 0	0 0
2001	20 8										0 0	20 8
2002	173 3										0 0	173 3
2003	43 4										0 0	-43 4
2004		41 4	51 3	23 2	74 5	33 1	1 2	5 8	0 8	0 3	41 1	41 1
2005		41 4	51 3	23 2	74 5	33 1	1 2	5 8	0 8	0 3	41 1	41 1
2006		41 4	51 3	23 2	74 5	33 1	1 2	5 8	0 8	0 3	41 1	41 1
2007		41 4	51 3	23 2	74 5	33 1	1 2	5 8	0 8	0 3	41 1	41 1
2008		41 4	51 3	23 2	74 5	33 1	1 2	5 8	0 8	0 3	41 1	41 1
2009		41 4	51 3	23 2	74 5	33 1	1 2	5 8	0 8	0 3	41 1	41 1
2010		41 4	51 3	23 2	74 5	33 1	1 2	5 8	0 8	0 3	41 1	41 1
2011		41 4	51 3	23 2	74 5	33 1	1 2	5 8	0 8	0 3	41 1	41 1
2012		41 4	51 3	23 2	74 5	33 1	1 2	5 8	0 8	0 3	41 1	41 1
2013		41 4	51 3	23 2	74 5	33 1	1 2	5 8	0 8	0 3	41 1	41 1
2014		41 4	51 3	23 2	74 5	33 1	1 2	5 8	0 8	0 3	41 1	41 1
2015		41 4	51 3	23 2	74 5	33 1	1 2	5 8	0 8	0 3	41 1	41 1
2016		41 4	51 3	23 2	74 5	33 1	1 2	5 8	0 8	0 3	41 1	41 1
2017		41 4	51 3	23 2	74 5	33 1	1 2	5 8	0 8	0 3	41 1	41 1
2018		41 4	51 3	23 2	74 5	33 1	1 2	5 8	0 8	0 3	41 1	41 1
2019		41 4	51 3	23 2	74 5	33 1	1 2	5 8	0 8	0 3	41 1	41 1
2020		41 4	51 3	23 2	74 5	33 1	1 2	5 8	0 8	0 3	41 1	41 1
2021		41 4	51 3	23 2	74 5	33 1	1 2	5 8	0 8	0 3	41 1	41 1
2022		41 4	51 3	23 2	74 5	33 1	1 2	5 8	0 8	0 3	41 1	41 1
2023		41 4	51 3	23 2	74 5	33 1	1 2	5 8	0 8	0 3	41 1	41 1
2024		41 4	51 3	23 2	74 5	33 1	1 2	5 8	0 8	0 3	41 1	41 1
2025		41 4	51 3	23 2	74 5	33 1	1 2	5 8	0 8	0 3	41 1	41 1
2026		41 4	51 3	23 2	74 5	33 1	1 2	5 8	0 8	0 3	41 1	41 1
2027		41 4	51 3	23 2	74 5	33 1	1 2	5 8	0 8	0 3	41 1	41 1
2028		41 4	51 3	23 2	74 5	33 1	1 2	5 8	0 8	0 3	41 1	41 1
2029		41 4	51 3	23 2	74 5	33 1	1 2	5 8	0 8	0 3	41 1	41 1
2030		41 4	51 3	23 2	74 5	33 1	1 2	5 8	0 8	0 3	41 1	41 1
2031		41 4	51 3	23 2	74 5	33 1	1 2	5 8	0 8	0 3	41 1	41 1
2032		41 4	51 3	23 2	74 5	33 1	1 2	5 8	0 8	0 3	41 1	41 1
2033		41 4	51 3	23 2	74 5	33 1	1 2	5 8	0 8	0 3	41 1	41 1
2034		41 4	51 3	23 2	74 5	33 1	1 2	5 8	0 8	0 3	41 1	41 1
2035		41 4	51 3	23 2	74 5	33 1	1 2	5 8	0 8	0 3	41 1	41 1
2036		41 4	51 3	23 2	74 5	33 1	1 2	5 8	0 8	0 3	41 1	41 1
2037		41 4	51 3	23 2	74 5	33 1	1 2	5 8	0 8	0 3	41 1	41 1
2038		41 4	51 3	23 2	74 5	33 1	1 2	5 8	0 8	0 3	41 1	41 1
											EIRR (%) =	15 1%

178

TABLE B 2-22 Capital Costs +10%

9/11/98 14 51
H \Etd\Carol\Goodman\ECOCB4WB xls

INPUT DATA AND ASSUMPTIONS

Yerevan Capital Cost million $US		261 3	Net Plant Heat Rates, Kcal/Kwh		Kcal/Kwh	Btu/Kwh		
			Yerevan Combined Cycle Plant		1 759	6976		
Capital Cost Expenditure Schedule / /yr			Existing Yerevan Plant		2 992	11866		
	Year 1	0 00	Existing Mazut/Gas Fired Plants		2 992	11866		
	Year 2	8 76						
	Year 3	72 97	Existing % age of Firing on Mazut		12			
	Year 4	18 27	Existing / age of Firing on Gas		88			
Commercial Operation Date	Jan 2004							
Plant Life years	35		Capacity Factors, /					
			Yerevan Combined Cycle Plant		80			
			Existing Yerevan Plants		70			
Fuel Prices				SO2	NOX	CO2	Part	
Natural Gas $/Gcal	8 81	Ratio						
Mazut $/Gcal	13 11	148 8 /	Emission Values ($/ton)	400	250	7	100	
Net Plant Capacity,MW			Emission Rates (kg/hr)					
Yerevan Combined Cycle Plant		381 2	Yerevan Combined Cycle Plant	0	117	104 167	0	
Existing Yerevan Plant (2x150 MW)		300	Existing Yerevan Plant (2x150 MW)	270	780	221 476	420	

YEAR	CAPITAL COST $ MILLIONS	FUEL COST $ MILLIONS "WITH PROJECT" YEREVAN CC	"WITHOUT PROJECT" OLD YEREVAN	OTHER GAS/MAZUT FIRED UNITS	TOTAL	BENEFITS $ MILLIONS DIFFERENTIAL FUEL COST	AIR EMISSION REDUCTION NOX	CO2	SO2	Part	TOTAL	NET BENEFITS $ MILLIONS
2000	0 0										0 0	0 0
2001	22 9										0 0	22 9
2002	190 6										0 0	190 6
2003	47 7										0 0	47 7
2004		41 4	51 3	23 2	74 5	33 1	1 2	5 8	0 8	0 3	41 1	41 1
2005		41 4	51 3	23 2	74 5	33 1	1 2	5 8	0 8	0 3	41 1	41 1
2006		41 4	51 3	23 2	74 5	33 1	1 2	5 8	0 8	0 3	41 1	41 1
2007		41 4	51 3	23 2	74 5	33 1	1 2	5 8	0 8	0 3	41 1	41 1
2008		41 4	51 3	23 2	74 5	33 1	1 2	5 8	0 8	0 3	41 1	41 1
2009		41 4	51 3	23 2	74 5	33 1	1 2	5 8	0 8	0 3	41 1	41 1
2010		41 4	51 3	23 2	74 5	33 1	1 2	5 8	0 8	0 3	41 1	41 1
2011		41 4	51 3	23 2	74 5	33 1	1 2	5 8	0 8	0 3	41 1	41 1
2012		41 4	51 3	23 2	74 5	33 1	1 2	5 8	0 8	0 3	41 1	41 1
2013		41 4	51 3	23 2	74 5	33 1	1 2	5 8	0 8	0 3	41 1	41 1
2014		41 4	51 3	23 2	74 5	33 1	1 2	5 8	0 8	0 3	41 1	41 1
2015		41 4	51 3	23 2	74 5	33 1	1 2	5 8	0 8	0 3	41 1	41 1
2016		41 4	51 3	23 2	74 5	33 1	1 2	5 8	0 8	0 3	41 1	41 1
2017		41 4	51 3	23 2	74 5	33 1	1 2	5 8	0 8	0 3	41 1	41 1
2018		41 4	51 3	23 2	74 5	33 1	1 2	5 8	0 8	0 3	41 1	41 1
2019		41 4	51 3	23 2	74 5	33 1	1 2	5 8	0 8	0 3	41 1	41 1
2020		41 4	51 3	23 2	74 5	33 1	1 2	5 8	0 8	0 3	41 1	41 1
2021		41 4	51 3	23 2	74 5	33 1	1 2	5 8	0 8	0 3	41 1	41 1
2022		41 4	51 3	23 2	74 5	33 1	1 2	5 8	0 8	0 3	41 1	41 1
2023		41 4	51 3	23 2	74 5	33 1	1 2	5 8	0 8	0 3	41 1	41 1
2024		41 4	51 3	23 2	74 5	33 1	1 2	5 8	0 8	0 3	41 1	41 1
2025		41 4	51 3	23 2	74 5	33 1	1 2	5 8	0 8	0 3	41 1	41 1
2026		41 4	51 3	23 2	74 5	33 1	1 2	5 8	0 8	0 3	41 1	41 1
2027		41 4	51 3	23 2	74 5	33 1	1 2	5 8	0 8	0 3	41 1	41 1
2028		41 4	51 3	23 2	74 5	33 1	1 2	5 8	0 8	0 3	41 1	41 1
2029		41 4	51 3	23 2	74 5	33 1	1 2	5 8	0 8	0 3	41 1	41 1
2030		41 4	51 3	23 2	74 5	33 1	1 2	5 8	0 8	0 3	41 1	41 1
2031		41 4	51 3	23 2	74 5	33 1	1 2	5 8	0 8	0 3	41 1	41 1
2032		41 4	51 3	23 2	74 5	33 1	1 2	5 8	0 8	0 3	41 1	41 1
2033		41 4	51 3	23 2	74 5	33 1	1 2	5 8	0 8	0 3	41 1	41 1
2034		41 4	51 3	23 2	74 5	33 1	1 2	5 8	0 8	0 3	41 1	41 1
2035		41 4	51 3	23 2	74 5	33 1	1 2	5 8	0 8	0 3	41 1	41 1
2036		41 4	51 3	23 2	74 5	33 1	1 2	5 8	0 8	0 3	41 1	41 1
2037		41 4	51 3	23 2	74 5	33 1	1 2	5 8	0 8	0 3	41 1	41 1
2038		41 4	51 3	23 2	74 5	33 1	1 2	5 8	0 8	0 3	41 1	41 1
											EIRR (%) =	13 8 %

TABLE B 2-23 Capital Costs -10%

9/11/98 14 51
H \Etd\Carol\Goodman\ECOCB4WB xls

INPUT DATA AND ASSUMPTIONS

Yerevan Capital Cost million $US		213 8	Net Plant Heat Rates, Kcal/Kwh		Kcal/Kwh	Btu/Kwh		
			Yerevan Combined Cycle Plant		1 759	6976		
Capital Cost Expenditure Schedule % /yr			Existing Yerevan Plant		2 992	11866		
	Year 1	0 00	Existing Mazut/Gas Fired Plants		2 992	11866		
	Year 2	8 76						
	Year 3	72 97	Existing % age of Firing on Mazut		12			
	Year 4	18 27	Existing / age of Firing on Gas		88			
Commercial Operation Date	Jan 2004							
Plant Life years	35		Capacity Factors, /					
			Yerevan Combined Cycle Plant		80			
			Existing Yerevan Plants		70			
Fuel Prices				SO2	NOX	CO2	Part	
Natural Gas $/Gcal	8 81	Ratio						
Mazut $/Gcal	13 11	148 8 /	Emission Values ($/ton)	400	250	7	100	
Net Plant Capacity,MW			Emission Rates (kg/hr)					
Yerevan Combined Cycle Plant		381 2	Yerevan Combined Cycle Plant	0	117	104 167	0	
Existing Yerevan Plant (2x150 MW)		300	Existing Yerevan Plant (2x150 MW)	270	780	221 476	420	

	CAPITAL COST	FUEL COST $ MILLIONS				BENEFITS $ MILLIONS						NET BENEFITS
		"WITH PROJECT"	"WITHOUT PROJECT"			DIFFERENTIAL	AIR EMISSION REDUCTION					
YEAR	$ MILLIONS	YEREVAN CC	OLD YEREVAN	OTHER GAS/MAZUT FIRED UNITS	TOTAL	FUEL COST	NOX	CO2	SO2	Part	TOTAL	$ MILLIONS
2000	0 0										0 0	0 0
2001	18 7										0 0	18 7
2002	156 0										0 0	156 0
2003	39 1										0 0	39 1
2004		41 4	51 3	23 2	74 5	33 1	1 2	5 8	0 8	0 3	41 1	41 1
2005		41 4	51 3	23 2	74 5	33 1	1 2	5 8	0 8	0 3	41 1	41 1
2006		41 4	51 3	23 2	74 5	33 1	1 2	5 8	0 8	0 3	41 1	41 1
2007		41 4	51 3	23 2	74 5	33 1	1 2	5 8	0 8	0 3	41 1	41 1
2008		41 4	51 3	23 2	74 5	33 1	1 2	5 8	0 8	0 3	41 1	41 1
2009		41 4	51 3	23 2	74 5	33 1	1 2	5 8	0 8	0 3	41 1	41 1
2010		41 4	51 3	23 2	74 5	33 1	1 2	5 8	0 8	0 3	41 1	41 1
2011		41 4	51 3	23 2	74 5	33 1	1 2	5 8	0 8	0 3	41 1	41 1
2012		41 4	51 3	23 2	74 5	33 1	1 2	5 8	0 8	0 3	41 1	41 1
2013		41 4	51 3	23 2	74 5	33 1	1 2	5 8	0 8	0 3	41 1	41 1
2014		41 4	51 3	23 2	74 5	33 1	1 2	5 8	0 8	0 3	41 1	41 1
2015		41 4	51 3	23 2	74 5	33 1	1 2	5 8	0 8	0 3	41 1	41 1
2016		41 4	51 3	23 2	74 5	33 1	1 2	5 8	0 8	0 3	41 1	41 1
2017		41 4	51 3	23 2	74 5	33 1	1 2	5 8	0 8	0 3	41 1	41 1
2018		41 4	51 3	23 2	74 5	33 1	1 2	5 8	0 8	0 3	41 1	41 1
2019		41 4	51 3	23 2	74 5	33 1	1 2	5 8	0 8	0 3	41 1	41 1
2020		41 4	51 3	23 2	74 5	33 1	1 2	5 8	0 8	0 3	41 1	41 1
2021		41 4	51 3	23 2	74 5	33 1	1 2	5 8	0 8	0 3	41 1	41 1
2022		41 4	51 3	23 2	74 5	33 1	1 2	5 8	0 8	0 3	41 1	41 1
2023		41 4	51 3	23 2	74 5	33 1	1 2	5 8	0 8	0 3	41 1	41 1
2024		41 4	51 3	23 2	74 5	33 1	1 2	5 8	0 8	0 3	41 1	41 1
2025		41 4	51 3	23 2	74 5	33 1	1 2	5 8	0 8	0 3	41 1	41 1
2026		41 4	51 3	23 2	74 5	33 1	1 2	5 8	0 8	0 3	41 1	41 1
2027		41 4	51 3	23 2	74 5	33 1	1 2	5 8	0 8	0 3	41 1	41 1
2028		41 4	51 3	23 2	74 5	33 1	1 2	5 8	0 8	0 3	41 1	41 1
2029		41 4	51 3	23 2	74 5	33 1	1 2	5 8	0 8	0 3	41 1	41 1
2030		41 4	51 3	23 2	74 5	33 1	1 2	5 8	0 8	0 3	41 1	41 1
2031		41 4	51 3	23 2	74 5	33 1	1 2	5 8	0 8	0 3	41 1	41 1
2032		41 4	51 3	23 2	74 5	33 1	1 2	5 8	0 8	0 3	41 1	41 1
2033		41 4	51 3	23 2	74 5	33 1	1 2	5 8	0 8	0 3	41 1	41 1
2034		41 4	51 3	23 2	74 5	33 1	1 2	5 8	0 8	0 3	41 1	41 1
2035		41 4	51 3	23 2	74 5	33 1	1 2	5 8	0 8	0 3	41 1	41 1
2036		41 4	51 3	23 2	74 5	33 1	1 2	5 8	0 8	0 3	41 1	41 1
2037		41 4	51 3	23 2	74 5	33 1	1 2	5 8	0 8	0 3	41 1	41 1
2038		41 4	51 3	23 2	74 5	33 1	1 2	5 8	0 8	0 3	41 1	41 1
											EIRR (%) =	16 6%

TABLE B 2-24 Mazut = 140% of Gas

9/11/98 14 53
H \Etd\Carol\Goodman\ECOCB4WB xls

INPUT DATA AND ASSUMPTIONS

Yerevan Capital Cost million $US		237 5	Net Plant Heat Rates, Kcal/Kwh		Kcal/Kwh	Btu/Kwh	
			Yerevan Combined Cycle Plant		1 759	6976	
Capital Cost Expenditure Schedule / /yr			Existing Yerevan Plant		2 992	11866	
	Year 1	0 00	Existing Mazut/Gas Fired Plants		2 992	11866	
	Year 2	8 76					
	Year 3	72 97	Existing / age of Firing on Mazut		12		
	Year 4	18 27	Existing / age of Firing on Gas		88		
Commercial Operation Date	Jan 2004						
Plant Life years	35		Capacity Factors, %				
			Yerevan Combined Cycle Plant		80		
			Existing Yerevan Plants		70		
Fuel Prices				SO2	NOX	CO2	Part
Natural Gas $/Gcal	8 81	Ratio					
Mazut $/Gcal	12 33	140 0 /	Emission Values ($/ton)	400	250	7	100
Net Plant Capacity,MW			Emission Rates (kg/hr)				
Yerevan Combined Cycle Plant		381 2	Yerevan Combined Cycle Plant	0	117	104 167	0
Existing Yerevan Plant (2x150 MW)		300	Existing Yerevan Plant (2x150 MW)	270	780	221 476	420

	CAPITAL COST	FUEL COST $ MILLIONS				BENEFITS $ MILLIONS						NET BENEFITS
		"WITH PROJECT"	"WITHOUT PROJECT"			DIFFERENTIAL	AIR EMISSION REDUCTION					
YEAR	$ MILLIONS	YEREVAN CC	OLD YEREVAN	OTHER GAS/MAZUT FIRED UNITS	TOTAL	FUEL COST	NOX	CO2	SO2	Part	TOTAL	$ MILLIONS
2000	0 0										0 0	0 0
2001	20 8										0 0	20 8
2002	173 3										0 0	173 3
2003	-43 4										0 0	43 4
2004		41 4	50 8	23 0	73 8	32 4	1 2	5 8	0 8	0 3	40 4	40 4
2005		41 4	50 8	23 0	73 8	32 4	1 2	5 8	0 8	0 3	40 4	40 4
2006		41 4	50 8	23 0	73 8	32 4	1 2	5 8	0 8	0 3	40 4	40 4
2007		41 4	50 8	23 0	73 8	32 4	1 2	5 8	0 8	0 3	40 4	40 4
2008		41 4	50 8	23 0	73 8	32 4	1 2	5 8	0 8	0 3	40 4	40 4
2009		41 4	50 8	23 0	73 8	32 4	1 2	5 8	0 8	0 3	40 4	40 4
2010		41 4	50 8	23 0	73 8	32 4	1 2	5 8	0 8	0 3	40 4	40 4
2011		41 4	50 8	23 0	73 8	32 4	1 2	5 8	0 8	0 3	40 4	40 4
2012		41 4	50 8	23 0	73 8	32 4	1 2	5 8	0 8	0 3	40 4	40 4
2013		41 4	50 8	23 0	73 8	32 4	1 2	5 8	0 8	0 3	40 4	40 4
2014		41 4	50 8	23 0	73 8	32 4	1 2	5 8	0 8	0 3	40 4	40 4
2015		41 4	50 8	23 0	73 8	32 4	1 2	5 8	0 8	0 3	40 4	40 4
2016		41 4	50 8	23 0	73 8	32 4	1 2	5 8	0 8	0 3	40 4	40 4
2017		41 4	50 8	23 0	73 8	32 4	1 2	5 8	0 8	0 3	40 4	40 4
2018		41 4	50 8	23 0	73 8	32 4	1 2	5 8	0 8	0 3	40 4	40 4
2019		41 4	50 8	23 0	73 8	32 4	1 2	5 8	0 8	0 3	40 4	40 4
2020		41 4	50 8	23 0	73 8	32 4	1 2	5 8	0 8	0 3	40 4	40 4
2021		41 4	50 8	23 0	73 8	32 4	1 2	5 8	0 8	0 3	40 4	40 4
2022		41 4	50 8	23 0	73 8	32 4	1 2	5 8	0 8	0 3	40 4	40 4
2023		41 4	50 8	23 0	73 8	32 4	1 2	5 8	0 8	0 3	40 4	40 4
2024		41 4	50 8	23 0	73 8	32 4	1 2	5 8	0 8	0 3	40 4	40 4
2025		41 4	50 8	23 0	73 8	32 4	1 2	5 8	0 8	0 3	40 4	40 4
2026		41 4	50 8	23 0	73 8	32 4	1 2	5 8	0 8	0 3	40 4	40 4
2027		41 4	50 8	23 0	73 8	32 4	1 2	5 8	0 8	0 3	40 4	40 4
2028		41 4	50 8	23 0	73 8	32 4	1 2	5 8	0 8	0 3	40 4	40 4
2029		41 4	50 8	23 0	73 8	32 4	1 2	5 8	0 8	0 3	40 4	40 4
2030		41 4	50 8	23 0	73 8	32 4	1 2	5 8	0 8	0 3	40 4	40 4
2031		41 4	50 8	23 0	73 8	32 4	1 2	5 8	0 8	0 3	40 4	40 4
2032		41 4	50 8	23 0	73 8	32 4	1 2	5 8	0 8	0 3	40 4	40 4
2033		41 4	50 8	23 0	73 8	32 4	1 2	5 8	0 8	0 3	40 4	40 4
2034		41 4	50 8	23 0	73 8	32 4	1 2	5 8	0 8	0 3	40 4	40 4
2035		41 4	50 8	23 0	73 8	32 4	1 2	5 8	0 8	0 3	40 4	40 4
2036		41 4	50 8	23 0	73 8	32 4	1 2	5 8	0 8	0 3	40 4	40 4
2037		41 4	50 8	23 0	73 8	32 4	1 2	5 8	0 8	0 3	40 4	40 4
2038		41 4	50 8	23 0	73 8	32 4	1 2	5 8	0 8	0 3	40 4	40 4
											EIRR (%) =	14 8 %

TABLE B 2-25 Mazut = 130% of Gas

9/11/98 14 54
H \Etd\Carol\Goodman\ECOCB4WB xls

INPUT DATA AND ASSUMPTIONS

Yerevan Capital Cost million $US		237 5
Capital Cost Expenditure Schedule / /yr		
	Year 1	0 00
	Year 2	8 76
	Year 3	72 97
	Year 4	18 27
Commercial Operation Date	Jan 2004	
Plant Life years	35	
Fuel Prices		
Natural Gas $/Gcal	8 81	Ratio
Mazut $/Gcal	11 45	130 0 /
Net Plant Capacity,MW		
Yerevan Combined Cycle Plant		381 2
Existing Yerevan Plant (2x150 MW)		300

Net Plant Heat Rates, Kcal/Kwh	Kcal/Kwh	Btu/Kwh
Yerevan Combined Cycle Plant	1 759	6976
Existing Yerevan Plant	2 992	11866
Existing Mazut/Gas Fired Plants	2 992	11866
Existing / age of Firing on Mazut	12	
Existing / age of Firing on Gas	88	
Capacity Factors, %		
Yerevan Combined Cycle Plant	80	
Existing Yerevan Plants	70	

	SO2	NOX	CO2	Part
Emission Values ($/ton)	400	250	7	100
Emission Rates (kg/hr)				
Yerevan Combined Cycle Plant	0	117	104 167	0
Existing Yerevan Plant (2x150 MW)	270	780	221 476	420

YEAR	CAPITAL COST $ MILLIONS	FUEL COST $ MILLIONS "WITH PROJECT" YEREVAN CC	"WITHOUT PROJECT" OLD YEREVAN	OTHER GAS/MAZUT FIRED UNITS	TOTAL	BENEFITS $ MILLIONS DIFFERENTIAL FUEL COST	AIR EMISSION REDUCTION NOX	CO2	SO2	Part	TOTAL	NET BENEFITS $ MILLIONS
2000	0 0										0 0	0 0
2001	20 8										0 0	20 8
2002	173 3										0 0	173 3
2003	-43 4										0 0	-43 4
2004		41 4	50 2	22 7	73 0	31 6	1 2	5 8	0 8	0 3	39 5	39 5
2005		41 4	50 2	22 7	73 0	31 6	1 2	5 8	0 8	0 3	39 5	39 5
2006		41 4	50 2	22 7	73 0	31 6	1 2	5 8	0 8	0 3	39 5	39 5
2007		41 4	50 2	22 7	73 0	31 6	1 2	5 8	0 8	0 3	39 5	39 5
2008		41 4	50 2	22 7	73 0	31 6	1 2	5 8	0 8	0 3	39 5	39 5
2009		41 4	50 2	22 7	73 0	31 6	1 2	5 8	0 8	0 3	39 5	39 5
2010		41 4	50 2	22 7	73 0	31 6	1 2	5 8	0 8	0 3	39 5	39 5
2011		41 4	50 2	22 7	73 0	31 6	1 2	5 8	0 8	0 3	39 5	39 5
2012		41 4	50 2	22 7	73 0	31 6	1 2	5 8	0 8	0 3	39 5	39 5
2013		41 4	50 2	22 7	73 0	31 6	1 2	5 8	0 8	0 3	39 5	39 5
2014		41 4	50 2	22 7	73 0	31 6	1 2	5 8	0 8	0 3	39 5	39 5
2015		41 4	50 2	22 7	73 0	31 6	1 2	5 8	0 8	0 3	39 5	39 5
2016		41 4	50 2	22 7	73 0	31 6	1 2	5 8	0 8	0 3	39 5	39 5
2017		41 4	50 2	22 7	73 0	31 6	1 2	5 8	0 8	0 3	39 5	39 5
2018		41 4	50 2	22 7	73 0	31 6	1 2	5 8	0 8	0 3	39 5	39 5
2019		41 4	50 2	22 7	73 0	31 6	1 2	5 8	0 8	0 3	39 5	39 5
2020		41 4	50 2	22 7	73 0	31 6	1 2	5 8	0 8	0 3	39 5	39 5
2021		41 4	50 2	22 7	73 0	31 6	1 2	5 8	0 8	0 3	39 5	39 5
2022		41 4	50 2	22 7	73 0	31 6	1 2	5 8	0 8	0 3	39 5	39 5
2023		41 4	50 2	22 7	73 0	31 6	1 2	5 8	0 8	0 3	39 5	39 5
2024		41 4	50 2	22 7	73 0	31 6	1 2	5 8	0 8	0 3	39 5	39 5
2025		41 4	50 2	22 7	73 0	31 6	1 2	5 8	0 8	0 3	39 5	39 5
2026		41 4	50 2	22 7	73 0	31 6	1 2	5 8	0 8	0 3	39 5	39 5
2027		41 4	50 2	22 7	73 0	31 6	1 2	5 8	0 8	0 3	39 5	39 5
2028		41 4	50 2	22 7	73 0	31 6	1 2	5 8	0 8	0 3	39 5	39 5
2029		41 4	50 2	22 7	73 0	31 6	1 2	5 8	0 8	0 3	39 5	39 5
2030		41 4	50 2	22 7	73 0	31 6	1 2	5 8	0 8	0 3	39 5	39 5
2031		41 4	50 2	22 7	73 0	31 6	1 2	5 8	0 8	0 3	39 5	39 5
2032		41 4	50 2	22 7	73 0	31 6	1 2	5 8	0 8	0 3	39 5	39 5
2033		41 4	50 2	22 7	73 0	31 6	1 2	5 8	0 8	0 3	39 5	39 5
2034		41 4	50 2	22 7	73 0	31 6	1 2	5 8	0 8	0 3	39 5	39 5
2035		41 4	50 2	22 7	73 0	31 6	1 2	5 8	0 8	0 3	39 5	39 5
2036		41 4	50 2	22 7	73 0	31 6	1 2	5 8	0 8	0 3	39 5	39 5
2037		41 4	50 2	22 7	73 0	31 6	1 2	5 8	0 8	0 3	39 5	39 5
2038		41 4	50 2	22 7	73 0	31 6	1 2	5 8	0 8	0 3	39 5	39 5
											EIRR (%) =	14 6%

TABLE B 2-26 Mazut = 120% of Gas

9/11/98 14 54
H \Etd\Carol\Goodman\ECOCB4WB xls

INPUT DATA AND ASSUMPTIONS

Yerevan Capital Cost million $US		237 5	Net Plant Heat Rates, Kcal/Kwh		Kcal/Kwh	Btu/Kwh	
			Yerevan Combined Cycle Plant		1 759	6976	
Capital Cost Expenditure Schedule / /yr			Existing Yerevan Plant		2 992	11866	
	Year 1	0 00	Existing Mazut/Gas Fired Plants		2 992	11866	
	Year 2	8 76					
	Year 3	72 97	Existing %age of Firing on Mazut		12		
	Year 4	18 27	Existing % age of Firing on Gas		88		
Commercial Operation Date	Jan 2004						
Plant Life years	35		Capacity Factors, /				
			Yerevan Combined Cycle Plant		80		
			Existing Yerevan Plants		70		
Fuel Prices				SO2	NOX	CO2	Part
Natural Gas $/Gcal	8 81	Ratio					
Mazut $/Gcal	10 57	120 0 /	Emission Values ($/ton)	400	250	7	100
Net Plant Capacity,MW			Emission Rates (kg/hr)				
Yerevan Combined Cycle Plant		381 2	Yerevan Combined Cycle Plant	0	117	104 167	0
Existing Yerevan Plant (2x150 MW)		300	Existing Yerevan Plant (2x150 MW)	270	780	221 476	420

YEAR	CAPITAL COST $ MILLIONS	FUEL COST $ MILLIONS "WITH PROJECT" YEREVAN CC	"WITHOUT PROJECT" OLD YEREVAN	OTHER GAS/MAZUT FIRED UNITS	TOTAL	BENEFITS $ MILLIONS DIFFERENTIAL FUEL COST	AIR EMISSION REDUCTION NOX	CO2	SO2	Part	TOTAL	NET BENEFITS $ MILLIONS
2000	0 0										0 0	0 0
2001	20 8										0 0	20 8
2002	173 3										0 0	173 3
2003	-43 4										0 0	43 4
2004		41 4	49 7	22 5	72 1	30 7	1 2	5 8	0 8	0 3	38 7	38 7
2005		41 4	49 7	22 5	72 1	30 7	1 2	5 8	0 8	0 3	38 7	38 7
2006		41 4	49 7	22 5	72 1	30 7	1 2	5 8	0 8	0 3	38 7	38 7
2007		41 4	49 7	22 5	72 1	30 7	1 2	5 8	0 8	0 3	38 7	38 7
2008		41 4	49 7	22 5	72 1	30 7	1 2	5 8	0 8	0 3	38 7	38 7
2009		41 4	49 7	22 5	72 1	30 7	1 2	5 8	0 8	0 3	38 7	38 7
2010		41 4	49 7	22 5	72 1	30 7	1 2	5 8	0 8	0 3	38 7	38 7
2011		41 4	49 7	22 5	72 1	30 7	1 2	5 8	0 8	0 3	38 7	38 7
2012		41 4	49 7	22 5	72 1	30 7	1 2	5 8	0 8	0 3	38 7	38 7
2013		41 4	49 7	22 5	72 1	30 7	1 2	5 8	0 8	0 3	38 7	38 7
2014		41 4	49 7	22 5	72 1	30 7	1 2	5 8	0 8	0 3	38 7	38 7
2015		41 4	49 7	22 5	72 1	30 7	1 2	5 8	0 8	0 3	38 7	38 7
2016		41 4	49 7	22 5	72 1	30 7	1 2	5 8	0 8	0 3	38 7	38 7
2017		41 4	49 7	22 5	72 1	30 7	1 2	5 8	0 8	0 3	38 7	38 7
2018		41 4	49 7	22 5	72 1	30 7	1 2	5 8	0 8	0 3	38 7	38 7
2019		41 4	49 7	22 5	72 1	30 7	1 2	5 8	0 8	0 3	38 7	38 7
2020		41 4	49 7	22 5	72 1	30 7	1 2	5 8	0 8	0 3	38 7	38 7
2021		41 4	49 7	22 5	72 1	30 7	1 2	5 8	0 8	0 3	38 7	38 7
2022		41 4	49 7	22 5	72 1	30 7	1 2	5 8	0 8	0 3	38 7	38 7
2023		41 4	49 7	22 5	72 1	30 7	1 2	5 8	0 8	0 3	38 7	38 7
2024		41 4	49 7	22 5	72 1	30 7	1 2	5 8	0 8	0 3	38 7	38 7
2025		41 4	49 7	22 5	72 1	30 7	1 2	5 8	0 8	0 3	38 7	38 7
2026		41 4	49 7	22 5	72 1	30 7	1 2	5 8	0 8	0 3	38 7	38 7
2027		41 4	49 7	22 5	72 1	30 7	1 2	5 8	0 8	0 3	38 7	38 7
2028		41 4	49 7	22 5	72 1	30 7	1 2	5 8	0 8	0 3	38 7	38 7
2029		41 4	49 7	22 5	72 1	30 7	1 2	5 8	0 8	0 3	38 7	38 7
2030		41 4	49 7	22 5	72 1	30 7	1 2	5 8	0 8	0 3	38 7	38 7
2031		41 4	49 7	22 5	72 1	30 7	1 2	5 8	0 8	0 3	38 7	38 7
2032		41 4	49 7	22 5	72 1	30 7	1 2	5 8	0 8	0 3	38 7	38 7
2033		41 4	49 7	22 5	72 1	30 7	1 2	5 8	0 8	0 3	38 7	38 7
2034		41 4	49 7	22 5	72 1	30 7	1 2	5 8	0 8	0 3	38 7	38 7
2035		41 4	49 7	22 5	72 1	30 7	1 2	5 8	0 8	0 3	38 7	38 7
2036		41 4	49 7	22 5	72 1	30 7	1 2	5 8	0 8	0 3	38 7	38 7
2037		41 4	49 7	22 5	72 1	30 7	1 2	5 8	0 8	0 3	38 7	38 7
2038		41 4	49 7	22 5	72 1	30 7	1 2	5 8	0 8	0 3	38 7	38 7
											EIRR (%) =	14 3%

TABLE B 2 27 Mazut = 110% of Gas

9/11/98 14 54
H \Etd\Carol\Goodman\ECOCB4WB xls

INPUT DATA AND ASSUMPTIONS

Yerevan Capital Cost million $US		237 5
Capital Cost Expenditure Schedule %/yr		
	Year 1	0 00
	Year 2	8 76
	Year 3	72 97
	Year 4	18 27
Commercial Operation Date	Jan 2004	
Plant Life years	35	

Net Plant Heat Rates, Kcal/Kwh	Kcal/Kwh	Btu/Kwh
Yerevan Combined Cycle Plant	1 759	6976
Existing Yerevan Plant	2 992	11866
Existing Mazut/Gas Fired Plants	2 992	11866
Existing % age of Firing on Mazut	12	
Existing % age of Firing on Gas	88	

Capacity Factors, %	
Yerevan Combined Cycle Plant	80
Existing Yerevan Plants	70

Fuel Prices		Ratio
Natural Gas $/Gcal	8 81	
Mazut $/Gcal	9 69	110 0 %

Emission Values ($/ton)	SO2	NOX	CO2	Part
	400	250	7	100

Net Plant Capacity,MW	
Yerevan Combined Cycle Plant	381 2
Existing Yerevan Plant (2x150 MW)	300

Emission Rates (kg/hr)	SO2	NOX	CO2	Part
Yerevan Combined Cycle Plant	0	117	104 167	0
Existing Yerevan Plant (2x150 MW)	270	780	221 476	420

YEAR	CAPITAL COST $ MILLIONS	FUEL COST $ MILLIONS "WITH PROJECT" YEREVAN CC	"WITHOUT PROJECT" OLD YEREVAN	"WITHOUT PROJECT" OTHER GAS/MAZUT FIRED UNITS	TOTAL	BENEFITS $ MILLIONS DIFFERENTIAL FUEL COST	AIR EMISSION REDUCTION NOX	CO2	SO2	Part	TOTAL	NET BENEFITS $ MILLIONS
2000	0 0										0 0	0 0
2001	20 8										0 0	20 8
2002	173 3										0 0	173 3
2003	43 4										0 0	43 4
2004		41 4	49 1	22 2	71 3	29 9	1 2	5 8	0 8	0 3	37 8	37 8
2005		41 4	49 1	22 2	71 3	29 9	1 2	5 8	0 8	0 3	37 8	37 8
2006		41 4	49 1	22 2	71 3	29 9	1 2	5 8	0 8	0 3	37 8	37 8
2007		41 4	49 1	22 2	71 3	29 9	1 2	5 8	0 8	0 3	37 8	37 8
2008		41 4	49 1	22 2	71 3	29 9	1 2	5 8	0 8	0 3	37 8	37 8
2009		41 4	49 1	22 2	71 3	29 9	1 2	5 8	0 8	0 3	37 8	37 8
2010		41 4	49 1	22 2	71 3	29 9	1 2	5 8	0 8	0 3	37 8	37 8
2011		41 4	49 1	22 2	71 3	29 9	1 2	5 8	0 8	0 3	37 8	37 8
2012		41 4	49 1	22 2	71 3	29 9	1 2	5 8	0 8	0 3	37 8	37 8
2013		41 4	49 1	22 2	71 3	29 9	1 2	5 8	0 8	0 3	37 8	37 8
2014		41 4	49 1	22 2	71 3	29 9	1 2	5 8	0 8	0 3	37 8	37 8
2015		41 4	49 1	22 2	71 3	29 9	1 2	5 8	0 8	0 3	37 8	37 8
2016		41 4	49 1	22 2	71 3	29 9	1 2	5 8	0 8	0 3	37 8	37 8
2017		41 4	49 1	22 2	71 3	29 9	1 2	5 8	0 8	0 3	37 8	37 8
2018		41 4	49 1	22 2	71 3	29 9	1 2	5 8	0 8	0 3	37 8	37 8
2019		41 4	49 1	22 2	71 3	29 9	1 2	5 8	0 8	0 3	37 8	37 8
2020		41 4	49 1	22 2	71 3	29 9	1 2	5 8	0 8	0 3	37 8	37 8
2021		41 4	49 1	22 2	71 3	29 9	1 2	5 8	0 8	0 3	37 8	37 8
2022		41 4	49 1	22 2	71 3	29 9	1 2	5 8	0 8	0 3	37 8	37 8
2023		41 4	49 1	22 2	71 3	29 9	1 2	5 8	0 8	0 3	37 8	37 8
2024		41 4	49 1	22 2	71 3	29 9	1 2	5 8	0 8	0 3	37 8	37 8
2025		41 4	49 1	22 2	71 3	29 9	1 2	5 8	0 8	0 3	37 8	37 8
2026		41 4	49 1	22 2	71 3	29 9	1 2	5 8	0 8	0 3	37 8	37 8
2027		41 4	49 1	22 2	71 3	29 9	1 2	5 8	0 8	0 3	37 8	37 8
2028		41 4	49 1	22 2	71 3	29 9	1 2	5 8	0 8	0 3	37 8	37 8
2029		41 4	49 1	22 2	71 3	29 9	1 2	5 8	0 8	0 3	37 8	37 8
2030		41 4	49 1	22 2	71 3	29 9	1 2	5 8	0 8	0 3	37 8	37 8
2031		41 4	49 1	22 2	71 3	29 9	1 2	5 8	0 8	0 3	37 8	37 8
2032		41 4	49 1	22 2	71 3	29 9	1 2	5 8	0 8	0 3	37 8	37 8
2033		41 4	49 1	22 2	71 3	29 9	1 2	5 8	0 8	0 3	37 8	37 8
2034		41 4	49 1	22 2	71 3	29 9	1 2	5 8	0 8	0 3	37 8	37 8
2035		41 4	49 1	22 2	71 3	29 9	1 2	5 8	0 8	0 3	37 8	37 8
2036		41 4	49 1	22 2	71 3	29 9	1 2	5 8	0 8	0 3	37 8	37 8
2037		41 4	49 1	22 2	71 3	29 9	1 2	5 8	0 8	0 3	37 8	37 8
2038		41 4	49 1	22 2	71 3	29 9	1 2	5 8	0 8	0 3	37 8	37 8

EIRR (%) = 14 0%

184

TABLE B 2-28 Mazut = 100% of Gas

9/11/98 14 55
H \Etd\Carol\Goodman\ECOCB4WB xls

INPUT DATA AND ASSUMPTIONS

Yerevan Capital Cost million $US		237 5	Net Plant Heat Rates, Kcal/Kwh		Kcal/Kwh	Btu/Kwh	
			Yerevan Combined Cycle Plant		1 759	6976	
Capital Cost Expenditure Schedule / /yr			Existing Yerevan Plant		2 992	11866	
	Year 1	0 00	Existing Mazut/Gas Fired Plants		2 992	11866	
	Year 2	8 76					
	Year 3	72 97	Existing / age of Firing on Mazut		12		
	Year 4	18 27	Existing / age of Firing on Gas		88		
Commercial Operation Date	Jan 2004						
Plant Life years	35		Capacity Factors, /				
			Yerevan Combined Cycle Plant		80		
			Existing Yerevan Plants		70		
Fuel Prices				SO2	NOX	CO2	Part
Natural Gas $/Gcal	8 81	Ratio					
Mazut $/Gcal	8 81	100 0 /	Emission Values ($/ton)	400	250	7	100
Net Plant Capacity,MW			Emission Rates (kg/hr)				
Yerevan Combined Cycle Plant		381 2	Yerevan Combined Cycle Plant	0	117	104 167	0
Existing Yerevan Plant (2x150 MW)		300	Existing Yerevan Plant (2x150 MW)	270	780	221 476	420

YEAR	CAPITAL COST $ MILLIONS	FUEL COST $ MILLIONS "WITH PROJECT" YEREVAN CC	"WITHOUT PROJECT" OLD YEREVAN	OTHER GAS/MAZUT FIRED UNITS	TOTAL	BENEFITS $ MILLIONS DIFFERENTIAL FUEL COST	AIR EMISSION REDUCTION NOX	CO2	SO2	Part	TOTAL	NET BENEFITS $ MILLIONS
2000	0 0										0 0	0 0
2001	20 8										0 0	20 8
2002	173 3										0 0	173 3
2003	43 4										0 0	43 4
2004		41 4	48 5	21 9	70 4	29 0	1 2	5 8	0 8	0 3	37 0	37 0
2005		41 4	48 5	21 9	70 4	29 0	1 2	5 8	0 8	0 3	37 0	37 0
2006		41 4	48 5	21 9	70 4	29 0	1 2	5 8	0 8	0 3	37 0	37 0
2007		41 4	48 5	21 9	70 4	29 0	1 2	5 8	0 8	0 3	37 0	37 0
2008		41 4	48 5	21 9	70 4	29 0	1 2	5 8	0 8	0 3	37 0	37 0
2009		41 4	48 5	21 9	70 4	29 0	1 2	5 8	0 8	0 3	37 0	37 0
2010		41 4	48 5	21 9	70 4	29 0	1 2	5 8	0 8	0 3	37 0	37 0
2011		41 4	48 5	21 9	70 4	29 0	1 2	5 8	0 8	0 3	37 0	37 0
2012		41 4	48 5	21 9	70 4	29 0	1 2	5 8	0 8	0 3	37 0	37 0
2013		41 4	48 5	21 9	70 4	29 0	1 2	5 8	0 8	0 3	37 0	37 0
2014		41 4	48 5	21 9	70 4	29 0	1 2	5 8	0 8	0 3	37 0	37 0
2015		41 4	48 5	21 9	70 4	29 0	1 2	5 8	0 8	0 3	37 0	37 0
2016		41 4	48 5	21 9	70 4	29 0	1 2	5 8	0 8	0 3	37 0	37 0
2017		41 4	48 5	21 9	70 4	29 0	1 2	5 8	0 8	0 3	37 0	37 0
2018		41 4	48 5	21 9	70 4	29 0	1 2	5 8	0 8	0 3	37 0	37 0
2019		41 4	48 5	21 9	70 4	29 0	1 2	5 8	0 8	0 3	37 0	37 0
2020		41 4	48 5	21 9	70 4	29 0	1 2	5 8	0 8	0 3	37 0	37 0
2021		41 4	48 5	21 9	70 4	29 0	1 2	5 8	0 8	0 3	37 0	37 0
2022		41 4	48 5	21 9	70 4	29 0	1 2	5 8	0 8	0 3	37 0	37 0
2023		41 4	48 5	21 9	70 4	29 0	1 2	5 8	0 8	0 3	37 0	37 0
2024		41 4	48 5	21 9	70 4	29 0	1 2	5 8	0 8	0 3	37 0	37 0
2025		41 4	48 5	21 9	70 4	29 0	1 2	5 8	0 8	0 3	37 0	37 0
2026		41 4	48 5	21 9	70 4	29 0	1 2	5 8	0 8	0 3	37 0	37 0
2027		41 4	48 5	21 9	70 4	29 0	1 2	5 8	0 8	0 3	37 0	37 0
2028		41 4	48 5	21 9	70 4	29 0	1 2	5 8	0 8	0 3	37 0	37 0
2029		41 4	48 5	21 9	70 4	29 0	1 2	5 8	0 8	0 3	37 0	37 0
2030		41 4	48 5	21 9	70 4	29 0	1 2	5 8	0 8	0 3	37 0	37 0
2031		41 4	48 5	21 9	70 4	29 0	1 2	5 8	0 8	0 3	37 0	37 0
2032		41 4	48 5	21 9	70 4	29 0	1 2	5 8	0 8	0 3	37 0	37 0
2033		41 4	48 5	21 9	70 4	29 0	1 2	5 8	0 8	0 3	37 0	37 0
2034		41 4	48 5	21 9	70 4	29 0	1 2	5 8	0 8	0 3	37 0	37 0
2035		41 4	48 5	21 9	70 4	29 0	1 2	5 8	0 8	0 3	37 0	37 0
2036		41 4	48 5	21 9	70 4	29 0	1 2	5 8	0 8	0 3	37 0	37 0
2037		41 4	48 5	21 9	70 4	29 0	1 2	5 8	0 8	0 3	37 0	37 0
2038		41 4	48 5	21 9	70 4	29 0	1 2	5 8	0 8	0 3	37 0	37 0

EIRR (%) = 13 7 /

TABLE B 2 29 Mazut = 90% of Gas

9/11/98 14 55
H \Etd\Carol\Goodman\ECOCB4WB xls

INPUT DATA AND ASSUMPTIONS

Yerevan Capital Cost million $US		237 5	Net Plant Heat Rates, Kcal/Kwh		Kcal/Kwh	Btu/Kwh	
			Yerevan Combined Cycle Plant		1 759	6976	
Capital Cost Expenditure Schedule % /yr			Existing Yerevan Plant		2 992	11866	
	Year 1	0 00	Existing Mazut/Gas Fired Plants		2 992	11866	
	Year 2	8 76					
	Year 3	72 97	Existing % age of Firing on Mazut		12		
	Year 4	18 27	Existing % age of Firing on Gas		88		
Commercial Operation Date	Jan 2004						
Plant Life years	35		Capacity Factors, %				
			Yerevan Combined Cycle Plant		80		
			Existing Yerevan Plants		70		
Fuel Prices				SO2	NOX	CO2	Part
Natural Gas $/Gcal	8 81	Ratio					
Mazut $/Gcal	7 93	90 0 /	Emission Values ($/ton)	400	250	7	100
Net Plant Capacity,MW			Emission Rates (kg/hr)				
Yerevan Combined Cycle Plant		381 2	Yerevan Combined Cycle Plant	0	117	104 167	0
Existing Yerevan Plant (2x150 MW)		300	Existing Yerevan Plant (2x150 MW)	270	780	221 476	420

YEAR	CAPITAL COST $ MILLIONS	FUEL COST $ MILLIONS "WITH PROJECT" YEREVAN CC	"WITHOUT PROJECT" OLD YEREVAN	OTHER GAS/MAZUT FIRED UNITS	TOTAL	BENEFITS $ MILLIONS DIFFERENTIAL FUEL COST	AIR EMISSION REDUCTION NOX	CO2	SO2	Part	TOTAL	NET BENEFITS $ MILLIONS
2000	0 0										0 0	0 0
2001	20 8										0 0	20 8
2002	173 3										0 0	173 3
2003	-43 4										0 0	-43 4
2004		41 4	47 9	21 7	69 6	28 2	1 2	5 8	0 8	0 3	36 1	36 1
2005		41 4	47 9	21 7	69 6	28 2	1 2	5 8	0 8	0 3	36 1	36 1
2006		41 4	47 9	21 7	69 6	28 2	1 2	5 8	0 8	0 3	36 1	36 1
2007		41 4	47 9	21 7	69 6	28 2	1 2	5 8	0 8	0 3	36 1	36 1
2008		41 4	47 9	21 7	69 6	28 2	1 2	5 8	0 8	0 3	36 1	36 1
2009		41 4	47 9	21 7	69 6	28 2	1 2	5 8	0 8	0 3	36 1	36 1
2010		41 4	47 9	21 7	69 6	28 2	1 2	5 8	0 8	0 3	36 1	36 1
2011		41 4	47 9	21 7	69 6	28 2	1 2	5 8	0 8	0 3	36 1	36 1
2012		41 4	47 9	21 7	69 6	28 2	1 2	5 8	0 8	0 3	36 1	36 1
2013		41 4	47 9	21 7	69 6	28 2	1 2	5 8	0 8	0 3	36 1	36 1
2014		41 4	47 9	21 7	69 6	28 2	1 2	5 8	0 8	0 3	36 1	36 1
2015		41 4	47 9	21 7	69 6	28 2	1 2	5 8	0 8	0 3	36 1	36 1
2016		41 4	47 9	21 7	69 6	28 2	1 2	5 8	0 8	0 3	36 1	36 1
2017		41 4	47 9	21 7	69 6	28 2	1 2	5 8	0 8	0 3	36 1	36 1
2018		41 4	47 9	21 7	69 6	28 2	1 2	5 8	0 8	0 3	36 1	36 1
2019		41 4	47 9	21 7	69 6	28 2	1 2	5 8	0 8	0 3	36 1	36 1
2020		41 4	47 9	21 7	69 6	28 2	1 2	5 8	0 8	0 3	36 1	36 1
2021		41 4	47 9	21 7	69 6	28 2	1 2	5 8	0 8	0 3	36 1	36 1
2022		41 4	47 9	21 7	69 6	28 2	1 2	5 8	0 8	0 3	36 1	36 1
2023		41 4	47 9	21 7	69 6	28 2	1 2	5 8	0 8	0 3	36 1	36 1
2024		41 4	47 9	21 7	69 6	28 2	1 2	5 8	0 8	0 3	36 1	36 1
2025		41 4	47 9	21 7	69 6	28 2	1 2	5 8	0 8	0 3	36 1	36 1
2026		41 4	47 9	21 7	69 6	28 2	1 2	5 8	0 8	0 3	36 1	36 1
2027		41 4	47 9	21 7	69 6	28 2	1 2	5 8	0 8	0 3	36 1	36 1
2028		41 4	47 9	21 7	69 6	28 2	1 2	5 8	0 8	0 3	36 1	36 1
2029		41 4	47 9	21 7	69 6	28 2	1 2	5 8	0 8	0 3	36 1	36 1
2030		41 4	47 9	21 7	69 6	28 2	1 2	5 8	0 8	0 3	36 1	36 1
2031		41 4	47 9	21 7	69 6	28 2	1 2	5 8	0 8	0 3	36 1	36 1
2032		41 4	47 9	21 7	69 6	28 2	1 2	5 8	0 8	0 3	36 1	36 1
2033		41 4	47 9	21 7	69 6	28 2	1 2	5 8	0 8	0 3	36 1	36 1
2034		41 4	47 9	21 7	69 6	28 2	1 2	5 8	0 8	0 3	36 1	36 1
2035		41 4	47 9	21 7	69 6	28 2	1 2	5 8	0 8	0 3	36 1	36 1
2036		41 4	47 9	21 7	69 6	28 2	1 2	5 8	0 8	0 3	36 1	36 1
2037		41 4	47 9	21 7	69 6	28 2	1 2	5 8	0 8	0 3	36 1	36 1
2038		41 4	47 9	21 7	69 6	28 2	1 2	5 8	0 8	0 3	36 1	36 1
											EIRR (%) =	13 4%

Table B.2 - 30

Sensitivity Cases

Economic Cost / Benefit Analysis

Parameter	Value	EIRR (%)	Table
Base Case	-	15 1	B 2-21
- Capital Cost = $237 5 MM			
- Mazut Price = $13 11/Gcal (148 8% of natural gas)			
- Existing Yerevan Plant Capacity Factor = 70%			
Total Capital Cost	+10%	13 8	B 2-22
	-10%	16 6	B 2-23
Mazut Price	140% of Natural Gas	14 8	B 2-24
	130% of Natural Gas	14 6	B 2-25
	120% of Natural Gas	14 3	B 2-26
	110% of Natural Gas	14 0	B 2-27
	100% of Natural Gas	13 7	B 2-28
	90% of Natural Gas	13 4	B 2-29

TABLE B 2 31

YEREVAN POWER PLANT FEASIBILITY STUDY
FINANCIAL ANALYSIS-BASE CASE TARIFF = $0 030 / KWH

constant 1998 dollars

Net plant output (MW)	381 20	381 20	381 20	381 20	381 20	381 20	381 20	381 20	381 20	381 20	381 20	381 20	381 20	381 20	381 20	381 20	381 20	381 20
Capacity factor (%)	80 00	80 00	80 00	80 00	80 00	80 00	80 00	80 00	80 00	80 00	80 00	80 00	80 00	80 00	80 00	80 00	80 00	80 00
Trans & distr loss factor (%)	0 00	0 00	0 00	0 00	0 00	0 00	0 00	0 00	0 00	0 00	0 00	0 00	0 00	0 00	0 00	0 00	0 00	0 00
Tariff rate ($/MWh)	0 030	0 030	0 030	0 030	0 030	0 030	0 030	0 030	0 030	0 030	0 030	0 030	0 030	0 030	0 030	0 030	0 030	0 030
Fuel cost ($/GCAL)	8 81	8 81	8 81	8 81	8 81	8 81	8 81	8 81	8 81	8 81	8 81	8 81	8 81	8 81	8 81	8 81	8 81	8 81
Loan interest rate (/)	4 00	4 00	4 00	4 00	4 00	4 00	4 00	4 00	4 00	4 00	4 00	4 00	4 00	4 00	4 00	4 00	4 00	4 00
Fixed O&M cost ($/kW/y)	0 00	0 00	0 00	0 00	14 03	14 03	14 03	14 03	14 03	14 03	14 03	14 03	14 03	14 03	14 03	14 03	14 03	14 03
Variable O&M cost ($/MWh)	0 00	0 00	0 00	0 00	0 87	0 87	0 87	0 87	0 87	0 87	0 87	0 87	0 87	0 87	0 87	0 87	0 87	0 87
Annual depreciation (%)	0 00	0 00	0 00	0 00	2 86	2 86	2 86	2 86	2 86	2 86	2 86	2 86	2 86	2 86	2 86	2 86	2 86	2 86
Taxes (/)	25 00	25 00	25 00	25 00	25 00	25 00	25 00	25 00	25 00	25 00	25 00	25 00	25 00	25 00	25 00	25 00	25 00	25 00
YEARS	**2000**	**2001**	**2002**	**2003**	**2004**	**2005**	**2006**	**2007**	**2008**	**2009**	**2010**	**2011**	**2012**	**2013**	**2014**	**2015**	**2016**	**2017**
REVENUES																		
Net plant production (GWh)	0 0	0 0	0 0	0 0	2671 4	2671 4	2671 4	2671 4	2671 4	2671 4	2671 4	2671 4	2671 4	2671 4	2671 4	2671 4	2671 4	2671 4
Trans & dist losses (GWh)					0 0	0 0	0 0	0 0	0 0	0 0	0 0	0 0	0 0	0 0	0 0	0 0	0 0	0 0
Energy sales (GWh)					2671 4	2671 4	2671 4	2671 4	2671 4	2671 4	2671 4	2671 4	2671 4	2671 4	2671 4	2671 4	2671 4	2671 4
(1) Annual revenues ($M)					80 1	80 1	80 1	80 1	80 1	80 1	80 1	80 1	80 1	80 1	80 1	80 1	80 1	80 1
CAPITAL EXPENDITURES																		
(2) EPC contractors cost ($M)		19 0	170 9	33 2														
(3) Other capital costs ($M)		0 0	0 0	0 0														
(4) Owner's cost ($M)		1 8	2 4	10 2														
(5) Interest During Construction		0 2	4 3	8 8														
OPERATING EXPENSES																		
Fuel cost ($M)					41 4	41 4	41 4	41 4	41 4	41 4	41 4	41 4	41 4	41 4	41 4	41 4	41 4	41 4
Fixed O&M cost ($M)					5 3	5 3	5 3	5 3	5 3	5 3	5 3	5 3	5 3	5 3	5 3	5 3	5 3	5 3
Variable O&M cost ($M)					2 3	2 3	2 3	2 3	2 3	2 3	2 3	2 3	2 3	2 3	2 3	2 3	2 3	2 3
(6) Subtotal expenses ($M)	0 0	0 0	0 0	0 0	49 1	49 1	49 1	49 1	49 1	49 1	49 1	49 1	49 1	49 1	49 1	49 1	49 1	49 1
FINANCIAL																		
Interest payment ($M)	0 0	0 4	4 3	8 8	10 0	10 0	10 0	10 0	10 0	10 0	10 0	10 0	10 0	10 0	9 8	9 4	9 0	8 6
Principal payment ($M)	0 0	0 0	0 0	0 0	0 0	0 0	0 0	0 0	0 0	0 0	0 0	0 0	0 0	0 0	10 0	10 0	10 0	10 0
(7) Subtotal ($M)	0 0	0 4	4 3	8 8	10 0	10 0	10 0	10 0	10 0	10 0	10 0	10 0	10 0	10 0	19 9	19 5	19 1	18 7
DEPRECIATION ($M)	0 0	0 0	0 0	0 0	7 2	7 2	7 2	7 2	7 2	7 2	7 2	7 2	7 2	7 2	7 2	7 2	7 2	7 2
PRETAX PROFITS ($M)	0 0	-0 4	-4 3	-8 8	13 9	13 9	13 9	13 9	13 9	13 9	13 9	13 9	13 9	13 9	14 1	14 5	14 9	15 3
(8) TAXES ($M)	0 0	0 0	0 0	0 0	0 0	0 0	3 5	3 5	3 5	3 5	3 5	3 5	3 5	3 5	3 5	3 6	3 7	3 8
AFTER TAX PROFITS ($M)	0 0	-0 4	-4 3	-8 8	13 9	13 9	10 4	10 4	10 4	10 4	10 4	10 4	10 4	10 4	10 6	10 9	11 2	11 5
DEBT SERVICE COVERAGE RATIO = ((1)-(6))/(7)					3 1	3 1	3 1	3 1	3 1	3 1	3 1	3 1	3 1	3 1	1 6	1 6	1 6	1 7
PROJECT CASH FLOW = (1)-(2)-(3)-(4)-(6)-(8)		20 8	173 3	-43 4	31 1	31 1	27 6	27 6	27 6	27 6	27 6	27 6	27 6	27 6	27 6	27 5	27 4	27 3
FIRR	10 4%																	

TABLE B 2-31

YEREVAN POWER PLANT FEASIBILITY STUDY
FINANCIAL ANALYSIS-BASE CASE TARIFF = $0 030 / KWH

constant 1998 dollars

Net plant output (MW)	381 20	381 20	381 20	381 20	381 20	381 20	381 20	381 20	381 20	381 20	381 20	381 20	381 20	381 20	381 20	381 20	381 20	381 20	381 20	381 20	381 20
Capacity factor (/)	80 00	80 00	80 00	80 00	80 00	80 00	80 00	80 00	80 00	80 00	80 00	80 00	80 00	80 00	80 00	80 00	80 00	80 00	80 00	80 00	80 00
Trans & distr loss factor (/)	0 00	0 00	0 00	0 00	0 00	0 00	0 00	0 00	0 00	0 00	0 00	0 00	0 00	0 00	0 00	0 00	0 00	0 00	0 00	0 00	0 00
Tariff rate ($/MWh)	0 030	0 030	0 030	0 030	0 030	0 030	0 030	0 030	0 030	0 030	0 030	0 030	0 030	0 030	0 030	0 030	0 030	0 030	0 030	0 030	0 030
Fuel cost ($/GCAL)	8 81	8 81	8 81	8 81	8 81	8 81	8 81	8 81	8 81	8 81	8 81	8 81	8 81	8 81	8 81	8 81	8 81	8 81	8 81	8 81	8 81
Loan interest rate (/)	4 00	4 00	4 00	4 00	4 00	4 00	4 00	4 00	4 00	4 00	4 00	4 00	4 00	4 00	4 00	4 00	4 00	4 00	4 00	4 00	4 00
Fixed O&M cost ($/kW/y)	14 03	14 03	14 03	14 03	14 03	14 03	14 03	14 03	14 03	14 03	14 03	14 03	14 03	14 03	14 03	14 03	14 03	14 03	14 03	14 03	14 03
Variable O&M cost ($/MWh)	0 87	0 87	0 87	0 87	0 87	0 87	0 87	0 87	0 87	0 87	0 87	0 87	0 87	0 87	0 87	0 87	0 87	0 87	0 87	0 87	0 87
Annual depreciation (/o)	2 86	2 86	2 86	2 86	2 86	2 86	2 86	2 86	2 86	2 86	2 86	2 86	2 86	2 86	2 86	2 86	2 86	2 86	2 86	2 86	2 86
Taxes (/)	25 00	25 00	25 00	25 00	25 00	25 00	25 00	25 00	25 00	25 00	25 00	25 00	25 00	25 00	25 00	25 00	25 00	25 00	25 00	25 00	25 00
YEARS	**2018**	**2019**	**2020**	**2021**	**2022**	**2023**	**2024**	**2025**	**2026**	**2027**	**2028**	**2029**	**2030**	**2031**	**2032**	**2033**	**2034**	**2035**	**2036**	**2037**	**2038**
REVENUES																					
Net plant production (GWh)	2671 4	2671 4	2671 4	2671 4	2671 4	2671 4	2671 4	2671 4	2671 4	2671 4	2671 4	2671 4	2671 4	2671 4	2671 4	2671 4	2671 4	2671 4	2671 4	2671 4	2671 4
Trans & dist losses (GWh)	0 0	0 0	0 0	0 0	0 0	0 0	0 0	0 0	0 0	0 0	0 0	0 0	0 0	0 0	0 0	0 0	0 0	0 0	0 0	0 0	0 0
Energy sales (GWh)	2671 4	2671 4	2671 4	2671 4	2671 4	2671 4	2671 4	2671 4	2671 4	2671 4	2671 4	2671 4	2671 4	2671 4	2671 4	2671 4	2671 4	2671 4	2671 4	2671 4	2671 4
(1) Annual revenues ($M)	80 1	80 1	80 1	80 1	80 1	80 1	80 1	80 1	80 1	80 1	80 1	80 1	80 1	80 1	80 1	80 1	80 1	80 1	80 1	80 1	80 1
CAPITAL EXPENDITURES																					
(2) EPC contractors cost ($M)																					
(3) Other capital costs ($M)																					
(4) Owner's cost ($M)																					
(5) Interest During Construction																					
OPERATING EXPENSES																					
Fuel cost ($M)	41 4	41 4	41 4	41 4	41 4	41 4	41 4	41 4	41 4	41 4	41 4	41 4	41 4	41 4	41 4	41 4	41 4	41 4	41 4	41 4	41 4
Fixed O&M cost ($M)	5 3	5 3	5 3	5 3	5 3	5 3	5 3	5 3	5 3	5 3	5 3	5 3	5 3	5 3	5 3	5 3	5 3	5 3	5 3	5 3	5 3
Variable O&M cost ($M)	2 3	2 3	2 3	2 3	2 3	2 3	2 3	2 3	2 3	2 3	2 3	2 3	2 3	2 3	2 3	2 3	2 3	2 3	2 3	2 3	2 3
(6) Subtotal expenses ($M)	49 1	49 1	49 1	49 1	49 1	49 1	49 1	49 1	49 1	49 1	49 1	49 1	49 1	49 1	49 1	49 1	49 1	49 1	49 1	49 1	49 1
FINANCIAL																					
Interest payment ($M)	8 2	7 8	7 4	7 0	6 6	6 2	5 8	5 4	5 0	4 6	4 2	3 8	3 4	3 0	2 6	2 2	1 8	1 4	1 0	0 6	0 2
Principal payment ($M)	10 0	10 0	10 0	10 0	10 0	10 0	10 0	10 0	10 0	10 0	10 0	10 0	10 0	10 0	10 0	10 0	10 0	10 0	10 0	10 0	10 0
(7) Subtotal ($M)	18 3	17 9	17 5	17 1	16 7	16 3	15 9	15 5	15 0	14 6	14 2	13 8	13 4	13 0	12 6	12 2	11 8	11 4	11 0	10 6	10 2
DEPRECIATION ($M)	7 2	7 2	7 2	7 2	7 2	7 2	7 2	7 2	7 2	7 2	7 2	7 2	7 2	7 2	7 2	7 2	7 2	7 2	7 2	7 2	7 2
PRETAX PROFITS ($M)	15 7	16 1	16 5	16 9	17 3	17 7	18 1	18 5	18 9	19 3	19 7	20 1	20 5	20 9	21 3	21 7	22 1	22 5	22 9	23 3	23 7
(8) TAXES ($M)	3 9	4 0	4 1	4 2	4 3	4 4	4 5	4 6	4 7	4 8	4 9	5 0	5 1	5 2	5 3	5 4	5 5	5 6	5 7	5 8	5 9
AFTER TAX PROFITS ($M)	11 8	12 1	12 4	12 7	13 0	13 3	13 6	13 9	14 2	14 5	14 8	15 1	15 4	15 7	16 0	16 3	16 6	16 9	17 2	17 5	17 8
DEBT SERVICE COVERAGE RATIO = ((1)-(6))/(7)	1 7	1 7	1 8	1 8	1 9	1 9	2 0	2 0	2 1	2 1	2 2	2 2	2 3	2 4	2 5	2 5	2 6	2 7	2 8	2 9	3 0
PROJECT CASH FLOW = (1)-(2)-(3)-(4)-(6)-(8)	27 2	27 1	27 0	26 9	26 8	26 7	26 6	26 5	26 3	26 2	26 1	26 0	25 9	25 8	25 7	25 6	25 5	25 4	25 3	25 2	25 1

TABLE B 2-32

YEREVAN POWER PLANT FEASIBILITY STUDY
FINANCIAL ANALYSIS-TARIFF = $0 025 / KWH

constant 1998 dollars

Net plant output (MW)	381 20	381 20	381 20	381 20	381 20	381 20	381 20	381 20	381 20	381 20	381 20	381 20	381 20	381 20	381 20	381 20	381 20	381 20
Capacity factor (/)	80 00	80 00	80 00	80 00	80 00	80 00	80 00	80 00	80 00	80 00	80 00	80 00	80 00	80 00	80 00	80 00	80 00	80 00
Trans & distr loss factor (%)	0 00	0 00	0 00	0 00	0 00	0 00	0 00	0 00	0 00	0 00	0 00	0 00	0 00	0 00	0 00	0 00	0 00	0 00
Tariff rate ($/MWh)	0 025	0 025	0 025	0 025	0 025	0 025	0 025	0 025	0 025	0 025	0 025	0 025	0 025	0 025	0 025	0 025	0 025	0 025
Fuel cost ($/GCAL)	8 81	8 81	8 81	8 81	8 81	8 81	8 81	8 81	8 81	8 81	8 81	8 81	8 81	8 81	8 81	8 81	8 81	8 81
Loan interest rate (/)	4 00	4 00	4 00	4 00	4 00	4 00	4 00	4 00	4 00	4 00	4 00	4 00	4 00	4 00	4 00	4 00	4 00	4 00
Fixed O&M cost ($/kW/y)	0 00	0 00	0 00	0 00	14 03	14 03	14 03	14 03	14 03	14 03	14 03	14 03	14 03	14 03	14 03	14 03	14 03	14 03
Variable O&M cost ($/MWh)	0 00	0 00	0 00	0 00	0 87	0 87	0 87	0 87	0 87	0 87	0 87	0 87	0 87	0 87	0 87	0 87	0 87	0 87
Annual depreciation (/)	0 00	0 00	0 00	0 00	2 86	2 86	2 86	2 86	2 86	2 86	2 86	2 86	2 86	2 86	2 86	2 86	2 86	2 86
Taxes (%)	25 00	25 00	25 00	25 00	25 00	25 00	25 00	25 00	25 00	25 00	25 00	25 00	25 00	25 00	25 00	25 00	25 00	25 00
YEARS	**2000**	**2001**	**2002**	**2003**	**2004**	**2005**	**2006**	**2007**	**2008**	**2009**	**2010**	**2011**	**2012**	**2013**	**2014**	**2015**	**2016**	**2017**
REVENUES																		
Net plant production (GWh)	0 0	0 0	0 0	0 0	2671 4	2671 4	2671 4	2671 4	2671 4	2671 4	2671 4	2671 4	2671 4	2671 4	2671 4	2671 4	2671 4	2671 4
Trans & dist losses (GWh)					0 0	0 0	0 0	0 0	0 0	0 0	0 0	0 0	0 0	0 0	0 0	0 0	0 0	0 0
Energy sales (GWh)					2671 4	2671 4	2671 4	2671 4	2671 4	2671 4	2671 4	2671 4	2671 4	2671 4	2671 4	2671 4	2671 4	2671 4
(1) Annual revenues ($M)					66 8	66 8	66 8	66 8	66 8	66 8	66 8	66 8	66 8	66 8	66 8	66 8	66 8	66 8
CAPITAL EXPENDITURES																		
(2) EPC contractors cost ($M)		19 0	170 9	33 2														
(3) Other capital costs ($M)		0 0	0 0	0 0														
(4) Owner's cost ($M)		1 8	2 4	10 2														
(5) Interest During Construction		0 2	4 3	8 8														
OPERATING EXPENSES																		
Fuel cost ($M)					41 4	41 4	41 4	41 4	41 4	41 4	41 4	41 4	41 4	41 4	41 4	41 4	41 4	41 4
Fixed O&M cost ($M)					5 3	5 3	5 3	5 3	5 3	5 3	5 3	5 3	5 3	5 3	5 3	5 3	5 3	5 3
Variable O&M cost ($M)					2 3	2 3	2 3	2 3	2 3	2 3	2 3	2 3	2 3	2 3	2 3	2 3	2 3	2 3
(6) Subtotal expenses ($M)	0 0	0 0	0 0	0 0	49 1	49 1	49 1	49 1	49 1	49 1	49 1	49 1	49 1	49 1	49 1	49 1	49 1	49 1
FINANCIAL																		
Interest payment ($M)	0 0	0 4	4 3	8 8	10 0	10 0	10 0	10 0	10 0	10 0	10 0	10 0	10 0	10 0	9 8	9 4	9 0	8 6
Principal payment ($M)	0 0	0 0	0 0	0 0	0 0	0 0	0 0	0 0	0 0	0 0	0 0	0 0	0 0	0 0	10 0	10 0	10 0	10 0
(7) Subtotal ($M)	0 0	0 4	4 3	8 8	10 0	10 0	10 0	10 0	10 0	10 0	10 0	10 0	10 0	10 0	19 9	19 5	19 1	18 7
DEPRECIATION ($M)	0 0	0 0	0 0	0 0	7 2	7 2	7 2	7 2	7 2	7 2	7 2	7 2	7 2	7 2	7 2	7 2	7 2	7 2
PRETAX PROFITS ($M)	0 0	-0 4	-4 3	-8 8	0 5	0 5	0 5	0 5	0 5	0 5	0 5	0 5	0 5	0 5	0 7	1 1	1 5	1 9
(8) TAXES ($M)	0 0	0 0	0 0	0 0	0 0	0 0	0 1	0 1	0 1	0 1	0 1	0 1	0 1	0 1	0 2	0 3	0 4	0 5
AFTER TAX PROFITS ($M)	0 0	-0 4	-4 3	-8 8	0 5	0 5	0 4	0 4	0 4	0 4	0 4	0 4	0 4	0 4	0 5	0 8	1 1	1 4
DEBT SERVICE COVERAGE RATIO = ((1)-(6))/(7)					1 8	1 8	1 8	1 8	1 8	1 8	1 8	1 8	1 8	1 8	0 9	0 9	0 9	0 9
PROJECT CASH FLOW = (1)-(2)-(3)-(4)-(6)-(8)		20 8	173 3	-43 4	17 7	17 7	17 6	17 6	17 6	17 6	17 6	17 6	17 6	17 6	17 5	17 4	17 3	17 2
FIRR	5 9%																	

190

TABLE B 2 32

YEREVAN POWER PLANT FEASIBILITY STUDY
FINANCIAL ANALYSIS-TARIFF = $0 025 / KWH

constant 1998 dollars

Net plant output (MW)	381 20	381 20	381 20	381 20	381 20	381 20	381 20	381 20	381 20	381 20	381 20	381 20	381 20	381 20	381 20	381 20	381 20	381 20	381 20	381 20	381 20
Capacity factor (%)	80 00	80 00	80 00	80 00	80 00	80 00	80 00	80 00	80 00	80 00	80 00	80 00	80 00	80 00	80 00	80 00	80 00	80 00	80 00	80 00	80 00
Trans & distr loss factor (/)	0 00	0 00	0 00	0 00	0 00	0 00	0 00	0 00	0 00	0 00	0 00	0 00	0 00	0 00	0 00	0 00	0 00	0 00	0 00	0 00	0 00
Tariff rate ($/MWh)	0 025	0 025	0 025	0 025	0 025	0 025	0 025	0 025	0 025	0 025	0 025	0 025	0 025	0 025	0 025	0 025	0 025	0 025	0 025	0 025	0 025
Fuel cost ($/GCAL)	8 81	8 81	8 81	8 81	8 81	8 81	8 81	8 81	8 81	8 81	8 81	8 81	8 81	8 81	8 81	8 81	8 81	8 81	8 81	8 81	8 81
Loan interest rate (/)	4 00	4 00	4 00	4 00	4 00	4 00	4 00	4 00	4 00	4 00	4 00	4 00	4 00	4 00	4 00	4 00	4 00	4 00	4 00	4 00	4 00
Fixed O&M cost ($/kW/y)	14 03	14 03	14 03	14 03	14 03	14 03	14 03	14 03	14 03	14 03	14 03	14 03	14 03	14 03	14 03	14 03	14 03	14 03	14 03	14 03	14 03
Variable O&M cost ($/MWh)	0 87	0 87	0 87	0 87	0 87	0 87	0 87	0 87	0 87	0 87	0 87	0 87	0 87	0 87	0 87	0 87	0 87	0 87	0 87	0 87	0 87
Annual depreciation (/)	2 86	2 86	2 86	2 86	2 86	2 86	2 86	2 86	2 86	2 86	2 86	2 86	2 86	2 86	2 86	2 86	2 86	2 86	2 86	2 86	2 86
Taxes (/)	25 00	25 00	25 00	25 00	25 00	25 00	25 00	25 00	25 00	25 00	25 00	25 00	25 00	25 00	25 00	25 00	25 00	25 00	25 00	25 00	25 00
YEARS	**2018**	**2019**	**2020**	**2021**	**2022**	**2023**	**2024**	**2025**	**2026**	**2027**	**2028**	**2029**	**2030**	**2031**	**2032**	**2033**	**2034**	**2035**	**2036**	**2037**	**2038**
REVENUES																					
Net plant production (GWh)	2671 4	2671 4	2671 4	2671 4	2671 4	2671 4	2671 4	2671 4	2671 4	2671 4	2671 4	2671 4	2671 4	2671 4	2671 4	2671 4	2671 4	2671 4	2671 4	2671 4	2671 4
Trans & dist losses (GWh)	0 0	0 0	0 0	0 0	0 0	0 0	0 0	0 0	0 0	0 0	0 0	0 0	0 0	0 0	0 0	0 0	0 0	0 0	0 0	0 0	0 0
Energy sales (GWh)	2671 4	2671 4	2671 4	2671 4	2671 4	2671 4	2671 4	2671 4	2671 4	2671 4	2671 4	2671 4	2671 4	2671 4	2671 4	2671 4	2671 4	2671 4	2671 4	2671 4	2671 4
(1) Annual revenues ($M)	66 8	66 8	66 8	66 8	66 8	66 8	66 8	66 8	66 8	66 8	66 8	66 8	66 8	66 8	66 8	66 8	66 8	66 8	66 8	66 8	66 8
CAPITAL EXPENDITURES																					
(2) EPC contractors cost ($M)																					
(3) Other capital costs ($M)																					
(4) Owner's cost ($M)																					
(5) Interest During Construction																					
OPERATING EXPENSES																					
Fuel cost ($M)	41 4	41 4	41 4	41 4	41 4	41 4	41 4	41 4	41 4	41 4	41 4	41 4	41 4	41 4	41 4	41 4	41 4	41 4	41 4	41 4	41 4
Fixed O&M cost ($M)	5 3	5 3	5 3	5 3	5 3	5 3	5 3	5 3	5 3	5 3	5 3	5 3	5 3	5 3	5 3	5 3	5 3	5 3	5 3	5 3	5 3
Variable O&M cost ($M)	2 3	2 3	2 3	2 3	2 3	2 3	2 3	2 3	2 3	2 3	2 3	2 3	2 3	2 3	2 3	2 3	2 3	2 3	2 3	2 3	2 3
(6) Subtotal expenses ($M)	49 1	49 1	49 1	49 1	49 1	49 1	49 1	49 1	49 1	49 1	49 1	49 1	49 1	49 1	49 1	49 1	49 1	49 1	49 1	49 1	49 1
FINANCIAL																					
Interest payment ($M)	8 2	7 8	7 4	7 0	6 6	6 2	5 8	5 4	5 0	4 6	4 2	3 8	3 4	3 0	2 6	2 2	1 8	1 4	1 0	0 6	0 2
Principal payment ($M)	10 0	10 0	10 0	10 0	10 0	10 0	10 0	10 0	10 0	10 0	10 0	10 0	10 0	10 0	10 0	10 0	10 0	10 0	10 0	10 0	10 0
(7) Subtotal ($M)	18 3	17 9	17 5	17 1	16 7	16 3	15 9	15 5	15 0	14 6	14 2	13 8	13 4	13 0	12 6	12 2	11 8	11 4	11 0	10 6	10 2
DEPRECIATION ($M)	7 2	7 2	7 2	7 2	7 2	7 2	7 2	7 2	7 2	7 2	7 2	7 2	7 2	7 2	7 2	7 2	7 2	7 2	7 2	7 2	7 2
PRETAX PROFITS ($M)	2 3	2 7	3 1	3 5	3 9	4 3	4 7	5 1	5 5	5 9	6 3	6 7	7 1	7 5	7 9	8 3	8 7	9 1	9 5	9 9	10 3
(8) TAXES ($M)	0 6	0 7	0 8	0 9	1 0	1 1	1 2	1 3	1 4	1 5	1 6	1 7	1 8	1 9	2 0	2 1	2 2	2 3	2 4	2 5	2 6
AFTER TAX PROFITS ($M)	1 7	2 0	2 3	2 6	2 9	3 2	3 5	3 8	4 1	4 5	4 8	5 1	5 4	5 7	6 0	6 3	6 6	6 9	7 2	7 5	7 8
DEBT SERVICE COVERAGE RATIO = ((1)-(6))/(7)	1 0	1 0	1 0	1 0	1 1	1 1	1 1	1 1	1 2	1 2	1 2	1 3	1 3	1 4	1 4	1 4	1 5	1 5	1 6	1 7	1 7
PROJECT CASH FLOW = (1)-(2)-(3)-(4)-(6)-(8)	17 1	17 0	16 9	16 8	16 7	16 6	16 5	16 4	16 3	16 2	16 1	16 0	15 9	15 8	15 7	15 6	15 5	15 4	15 3	15 2	15 1

TABLE B 2 33

YEREVAN POWER PLANT FEASIBILITY STUDY
FINANCIAL ANALYSIS-TARIFF = $0 0275 / KWH

constant 1998 dollars

Net plant output (MW)	381 20	381 20	381 20	381 20	381 20	381 20	381 20	381 20	381 20	381 20	381 20	381 20	381 20	381 20	381 20	381 20	381 20	381 20
Capacity factor (%)	80 00	80 00	80 00	80 00	80 00	80 00	80 00	80 00	80 00	80 00	80 00	80 00	80 00	80 00	80 00	80 00	80 00	80 00
Trans & distr loss factor (/)	0 00	0 00	0 00	0 00	0 00	0 00	0 00	0 00	0 00	0 00	0 00	0 00	0 00	0 00	0 00	0 00	0 00	0 00
Tariff rate ($/MWh)	0 0275	0 0275	0 0275	0 0275	0 0275	0 0275	0 0275	0 0275	0 0275	0 0275	0 0275	0 0275	0 0275	0 0275	0 0275	0 0275	0 0275	0 0275
Fuel cost ($/GCAL)	8 81	8 81	8 81	8 81	8 81	8 81	8 81	8 81	8 81	8 81	8 81	8 81	8 81	8 81	8 81	8 81	8 81	8 81
Loan interest rate (%)	4 00	4 00	4 00	4 00	4 00	4 00	4 00	4 00	4 00	4 00	4 00	4 00	4 00	4 00	4 00	4 00	4 00	4 00
Fixed O&M cost ($/kW/y)	0 00	0 00	0 00	0 00	14 03	14 03	14 03	14 03	14 03	14 03	14 03	14 03	14 03	14 03	14 03	14 03	14 03	14 03
Variable O&M cost ($/MWh)	0 00	0 00	0 00	0 00	0 87	0 87	0 87	0 87	0 87	0 87	0 87	0 87	0 87	0 87	0 87	0 87	0 87	0 87
Annual depreciation (/)	0 00	0 00	0 00	0 00	2 86	2 86	2 86	2 86	2 86	2 86	2 86	2 86	2 86	2 86	2 86	2 86	2 86	2 86
Taxes (/)	25 00	25 00	25 00	25 00	25 00	25 00	25 00	25 00	25 00	25 00	25 00	25 00	25 00	25 00	25 00	25 00	25 00	25 00
YEARS	**2000**	**2001**	**2002**	**2003**	**2004**	**2005**	**2006**	**2007**	**2008**	**2009**	**2010**	**2011**	**2012**	**2013**	**2014**	**2015**	**2016**	**2017**
REVENUES																		
Net plant production (GWh)	0 0	0 0	0 0	0 0	2671 4	2671 4	2671 4	2671 4	2671 4	2671 4	2671 4	2671 4	2671 4	2671 4	2671 4	2671 4	2671 4	2671 4
Trans & dist losses (GWh)					0 0	0 0	0 0	0 0	0 0	0 0	0 0	0 0	0 0	0 0	0 0	0 0	0 0	0 0
Energy sales (GWh)					2671 4	2671 4	2671 4	2671 4	2671 4	2671 4	2671 4	2671 4	2671 4	2671 4	2671 4	2671 4	2671 4	2671 4
(1) Annual revenues ($M)					73 5	73 5	73 5	73 5	73 5	73 5	73 5	73 5	73 5	73 5	73 5	73 5	73 5	73 5
CAPITAL EXPENDITURES																		
(2) EPC contractors cost ($M)		19 0	170 9	33 2														
(3) Other capital costs ($M)		0 0	0 0	0 0														
(4) Owner's cost ($M)		1 8	2 4	10 2														
(5) Interest During Construction		0 2	4 3	8 8														
OPERATING EXPENSES																		
Fuel cost ($M)					41 4	41 4	41 4	41 4	41 4	41 4	41 4	41 4	41 4	41 4	41 4	41 4	41 4	41 4
Fixed O&M cost ($M)					5 3	5 3	5 3	5 3	5 3	5 3	5 3	5 3	5 3	5 3	5 3	5 3	5 3	5 3
Variable O&M cost ($M)					2 3	2 3	2 3	2 3	2 3	2 3	2 3	2 3	2 3	2 3	2 3	2 3	2 3	2 3
(6) Subtotal expenses ($M)	0 0	0 0	0 0	0 0	49 1	49 1	49 1	49 1	49 1	49 1	49 1	49 1	49 1	49 1	49 1	49 1	49 1	49 1
FINANCIAL																		
Interest payment ($M)	0 0	0 4	4 3	8 8	10 0	10 0	10 0	10 0	10 0	10 0	10 0	10 0	10 0	10 0	9 8	9 4	9 0	8 6
Principal payment ($M)	0 0	0 0	0 0	0 0	0 0	0 0	0 0	0 0	0 0	0 0	0 0	0 0	0 0	0 0	10 0	10 0	10 0	10 0
(7) Subtotal ($M)	0 0	0 4	4 3	8 8	10 0	10 0	10 0	10 0	10 0	10 0	10 0	10 0	10 0	10 0	19 9	19 5	19 1	18 7
DEPRECIATION ($M)	0 0	0 0	0 0	0 0	7 2	7 2	7 2	7 2	7 2	7 2	7 2	7 2	7 2	7 2	7 2	7 2	7 2	7 2
PRETAX PROFITS ($M)	0 0	-0 4	-4 3	-8 8	7 2	7 2	7 2	7 2	7 2	7 2	7 2	7 2	7 2	7 2	7 4	7 8	8 2	8 6
(8) TAXES ($M)	0 0	0 0	0 0	0 0	0 0	0 0	1 8	1 8	1 8	1 8	1 8	1 8	1 8	1 8	1 8	1 9	2 0	2 1
AFTER TAX PROFITS ($M)	0 0	-0 4	-4 3	-8 8	7 2	7 2	5 4	5 4	5 4	5 4	5 4	5 4	5 4	5 4	5 5	5 8	6 1	6 4
DEBT SERVICE COVERAGE RATIO = ((1)-(6))/(7)					2 4	2 4	2 4	2 4	2 4	2 4	2 4	2 4	2 4	2 4	1 2	1 3	1 3	1 3
PROJECT CASH FLOW = (1)-(2)-(3)-(4)-(6)-(8)		20 8	173 3	-43 4	24 4	24 4	22 6	22 6	22 6	22 6	22 6	22 6	22 6	22 6	22 5	22 4	22 3	22 2
FIRR	8 3%																	

192

TABLE B 2 33

YEREVAN POWER PLANT FEASIBILITY STUDY
FINANCIAL ANALYSIS-TARIFF = $0 0275 / KWH

constant 1998 dollars

Net plant output (MW)	381 20	381 20	381 20	381 20	381 20	381 20	381 20	381 20	381 20	381 20	381 20	381 20	381 20	381 20	381 20	381 20	381 20	381 20	381 20	381 20	381 20
Capacity factor (/)	80 00	80 00	80 00	80 00	80 00	80 00	80 00	80 00	80 00	80 00	80 00	80 00	80 00	80 00	80 00	80 00	80 00	80 00	80 00	80 00	80 00
Trans & distr loss factor (%)	0 00	0 00	0 00	0 00	0 00	0 00	0 00	0 00	0 00	0 00	0 00	0 00	0 00	0 00	0 00	0 00	0 00	0 00	0 00	0 00	0 00
Tariff rate ($/MWh)	0 0275	0 0275	0 0275	0 0275	0 0275	0 0275	0 0275	0 0275	0 0275	0 0275	0 0275	0 0275	0 0275	0 0275	0 0275	0 0275	0 0275	0 0275	0 0275	0 0275	0 0275
Fuel cost ($/GCAL)	8 81	8 81	8 81	8 81	8 81	8 81	8 81	8 81	8 81	8 81	8 81	8 81	8 81	8 81	8 81	8 81	8 81	8 81	8 81	8 81	8 81
Loan interest rate (/)	4 00	4 00	4 00	4 00	4 00	4 00	4 00	4 00	4 00	4 00	4 00	4 00	4 00	4 00	4 00	4 00	4 00	4 00	4 00	4 00	4 00
Fixed O&M cost ($/kW/y)	14 03	14 03	14 03	14 03	14 03	14 03	14 03	14 03	14 03	14 03	14 03	14 03	14 03	14 03	14 03	14 03	14 03	14 03	14 03	14 03	14 03
Variable O&M cost ($/MWh)	0 87	0 87	0 87	0 87	0 87	0 87	0 87	0 87	0 87	0 87	0 87	0 87	0 87	0 87	0 87	0 87	0 87	0 87	0 87	0 87	0 87
Annual depreciation (/a)	2 86	2 86	2 86	2 86	2 86	2 86	2 86	2 86	2 86	2 86	2 86	2 86	2 86	2 86	2 86	2 86	2 86	2 86	2 86	2 86	2 86
Taxes (/)	25 00	25 00	25 00	25 00	25 00	25 00	25 00	25 00	25 00	25 00	25 00	25 00	25 00	25 00	25 00	25 00	25 00	25 00	25 00	25 00	25 00
YEARS	**2018**	**2019**	**2020**	**2021**	**2022**	**2023**	**2024**	**2025**	**2026**	**2027**	**2028**	**2029**	**2030**	**2031**	**2032**	**2033**	**2034**	**2035**	**2036**	**2037**	**2038**
REVENUES																					
Net plant production (GWh)	2671 4	2671 4	2671 4	2671 4	2671 4	2671 4	2671 4	2671 4	2671 4	2671 4	2671 4	2671 4	2671 4	2671 4	2671 4	2671 4	2671 4	2671 4	2671 4	2671 4	2671 4
Trans & dist losses (GWh)	0 0	0 0	0 0	0 0	0 0	0 0	0 0	0 0	0 0	0 0	0 0	0 0	0 0	0 0	0 0	0 0	0 0	0 0	0 0	0 0	0 0
Energy sales (GWh)	2671 4	2671 4	2671 4	2671 4	2671 4	2671 4	2671 4	2671 4	2671 4	2671 4	2671 4	2671 4	2671 4	2671 4	2671 4	2671 4	2671 4	2671 4	2671 4	2671 4	2671 4
(1) Annual revenues ($M)	73 5	73 5	73 5	73 5	73 5	73 5	73 5	73 5	73 5	73 5	73 5	73 5	73 5	73 5	73 5	73 5	73 5	73 5	73 5	73 5	73 5
CAPITAL EXPENDITURES																					
(2) EPC contractors cost ($M)																					
(3) Other capital costs ($M)																					
(4) Owner's cost ($M)																					
(5) Interest During Construction																					
OPERATING EXPENSES																					
Fuel cost ($M)	41 4	41 4	41 4	41 4	41 4	41 4	41 4	41 4	41 4	41 4	41 4	41 4	41 4	41 4	41 4	41 4	41 4	41 4	41 4	41 4	41 4
Fixed O&M cost ($M)	5 3	5 3	5 3	5 3	5 3	5 3	5 3	5 3	5 3	5 3	5 3	5 3	5 3	5 3	5 3	5 3	5 3	5 3	5 3	5 3	5 3
Variable O&M cost ($M)	2 3	2 3	2 3	2 3	2 3	2 3	2 3	2 3	2 3	2 3	2 3	2 3	2 3	2 3	2 3	2 3	2 3	2 3	2 3	2 3	2 3
(6) Subtotal expenses ($M)	49 1	49 1	49 1	49 1	49 1	49 1	49 1	49 1	49 1	49 1	49 1	49 1	49 1	49 1	49 1	49 1	49 1	49 1	49 1	49 1	49 1
FINANCIAL																					
Interest payment ($M)	8 2	7 8	7 4	7 0	6 6	6 2	5 8	5 4	5 0	4 6	4 2	3 8	3 4	3 0	2 6	2 2	1 8	1 4	1 0	0 6	0 2
Principal payment ($M)	10 0	10 0	10 0	10 0	10 0	10 0	10 0	10 0	10 0	10 0	10 0	10 0	10 0	10 0	10 0	10 0	10 0	10 0	10 0	10 0	10 0
(7) Subtotal ($M)	18 3	17 9	17 5	17 1	16 7	16 3	15 9	15 5	15 0	14 6	14 2	13 8	13 4	13 0	12 6	12 2	11 8	11 4	11 0	10 6	10 2
DEPRECIATION ($M)	7 2	7 2	7 2	7 2	7 2	7 2	7 2	7 2	7 2	7 2	7 2	7 2	7 2	7 2	7 2	7 2	7 2	7 2	7 2	7 2	7 2
PRETAX PROFITS ($M)	9 0	9 4	9 8	10 2	10 6	11 0	11 4	11 8	12 2	12 6	13 0	13 4	13 8	14 2	14 6	15 0	15 4	15 8	16 2	16 6	17 0
(8) TAXES ($M)	2 3	2 4	2 5	2 6	2 7	2 8	2 9	3 0	3 1	3 2	3 3	3 4	3 5	3 6	3 7	3 8	3 9	4 0	4 1	4 2	4 3
AFTER TAX PROFITS ($M)	6 8	7 1	7 4	7 7	8 0	8 3	8 6	8 9	9 2	9 5	9 8	10 1	10 4	10 7	11 0	11 3	11 6	11 9	12 2	12 5	12 8
DEBT SERVICE COVERAGE RATIO = ((1)-(6))/(7)	1 3	1 4	1 4	1 4	1 5	1 5	1 5	1 6	1 6	1 7	1 7	1 8	1 8	1 9	1 9	2 0	2 1	2 1	2 2	2 3	2 4
PROJECT CASH FLOW = (1)-(2)-(3)-(4)-(6)-(8)	22 1	22 0	21 9	21 8	21 7	21 6	21 5	21 4	21 3	21 2	21 1	21 0	20 9	20 8	20 7	20 6	20 5	20 4	20 3	20 2	20 1

TABLE B 2-34

YEREVAN POWER PLANT FEASIBILITY STUDY
FINANCIAL ANALYSIS-TARIFF = $0 0325 / KWH

constant 1998 dollars

Net plant output (MW)	381 20	381 20	381 20	381 20	381 20	381 20	381 20	381 20	381 20	381 20	381 20	381 20	381 20	381 20	381 20	381 20	381 20	381 20
Capacity factor (%)	80 00	80 00	80 00	80 00	80 00	80 00	80 00	80 00	80 00	80 00	80 00	80 00	80 00	80 00	80 00	80 00	80 00	80 00
Trans & distr loss factor (%)	0 00	0 00	0 00	0 00	0 00	0 00	0 00	0 00	0 00	0 00	0 00	0 00	0 00	0 00	0 00	0 00	0 00	0 00
Tariff rate ($/MWh)	0 0325	0 0325	0 0325	0 0325	0 0325	0 0325	0 0325	0 0325	0 0325	0 0325	0 0325	0 0325	0 0325	0 0325	0 0325	0 0325	0 0325	0 0325
Fuel cost ($/GCAL)	8 81	8 81	8 81	8 81	8 81	8 81	8 81	8 81	8 81	8 81	8 81	8 81	8 81	8 81	8 81	8 81	8 81	8 81
Loan interest rate (/)	4 00	4 00	4 00	4 00	4 00	4 00	4 00	4 00	4 00	4 00	4 00	4 00	4 00	4 00	4 00	4 00	4 00	4 00
Fixed O&M cost ($/kW/y)	0 00	0 00	0 00	0 00	14 03	14 03	14 03	14 03	14 03	14 03	14 03	14 03	14 03	14 03	14 03	14 03	14 03	14 03
Variable O&M cost ($/MWh)	0 00	0 00	0 00	0 00	0 87	0 87	0 87	0 87	0 87	0 87	0 87	0 87	0 87	0 87	0 87	0 87	0 87	0 87
Annual depreciation (%)	0 00	0 00	0 00	0 00	2 86	2 86	2 86	2 86	2 86	2 86	2 86	2 86	2 86	2 86	2 86	2 86	2 86	2 86
Taxes (/)	25 00	25 00	25 00	25 00	25 00	25 00	25 00	25 00	25 00	25 00	25 00	25 00	25 00	25 00	25 00	25 00	25 00	25 00
YEARS	**2000**	**2001**	**2002**	**2003**	**2004**	**2005**	**2006**	**2007**	**2008**	**2009**	**2010**	**2011**	**2012**	**2013**	**2014**	**2015**	**2016**	**2017**
REVENUES																		
Net plant production (GWh)	0 0	0 0	0 0	0 0	2671 4	2671 4	2671 4	2671 4	2671 4	2671 4	2671 4	2671 4	2671 4	2671 4	2671 4	2671 4	2671 4	2671 4
Trans & dist losses (GWh)					0 0	0 0	0 0	0 0	0 0	0 0	0 0	0 0	0 0	0 0	0 0	0 0	0 0	0 0
Energy sales (GWh)					2671 4	2671 4	2671 4	2671 4	2671 4	2671 4	2671 4	2671 4	2671 4	2671 4	2671 4	2671 4	2671 4	2671 4
(1) Annual revenues ($M)					86 8	86 8	86 8	86 8	86 8	86 8	86 8	86 8	86 8	86 8	86 8	86 8	86 8	86 8
CAPITAL EXPENDITURES																		
(2) EPC contractors cost ($M)		19 0	170 9	33 2														
(3) Other capital costs ($M)		0 0	0 0	0 0														
(4) Owner's cost ($M)		1 8	2 4	10 2														
(5) Interest During Construction		0 2	4 3	8 8														
OPERATING EXPENSES																		
Fuel cost ($M)					41 4	41 4	41 4	41 4	41 4	41 4	41 4	41 4	41 4	41 4	41 4	41 4	41 4	41 4
Fixed O&M cost ($M)					5 3	5 3	5 3	5 3	5 3	5 3	5 3	5 3	5 3	5 3	5 3	5 3	5 3	5 3
Variable O&M cost ($M)					2 3	2 3	2 3	2 3	2 3	2 3	2 3	2 3	2 3	2 3	2 3	2 3	2 3	2 3
(6) Subtotal expenses ($M)	0 0	0 0	0 0	0 0	49 1	49 1	49 1	49 1	49 1	49 1	49 1	49 1	49 1	49 1	49 1	49 1	49 1	49 1
FINANCIAL																		
Interest payment ($M)	0 0	0 4	4 3	8 8	10 0	10 0	10 0	10 0	10 0	10 0	10 0	10 0	10 0	10 0	9 8	9 4	9 0	8 6
Principal payment ($M)	0 0	0 0	0 0	0 0	0 0	0 0	0 0	0 0	0 0	0 0	0 0	0 0	0 0	0 0	10 0	10 0	10 0	10 0
(7) Subtotal ($M)	0 0	0 4	4 3	8 8	10 0	10 0	10 0	10 0	10 0	10 0	10 0	10 0	10 0	10 0	19 9	19 5	19 1	18 7
DEPRECIATION ($M)	0 0	0 0	0 0	0 0	7 2	7 2	7 2	7 2	7 2	7 2	7 2	7 2	7 2	7 2	7 2	7 2	7 2	7 2
PRETAX PROFITS ($M)	0 0	-0 4	-4 3	-8 8	20 6	20 6	20 6	20 6	20 6	20 6	20 6	20 6	20 6	20 6	20 8	21 2	21 6	22 0
(8) TAXES ($M)	0 0	0 0	0 0	0 0	0 0	0 0	5 1	5 1	5 1	5 1	5 1	5 1	5 1	5 1	5 2	5 3	5 4	5 5
AFTER TAX PROFITS ($M)	0 0	-0 4	-4 3	-8 8	20 6	20 6	15 4	15 4	15 4	15 4	15 4	15 4	15 4	15 4	15 6	15 9	16 2	16 5
DEBT SERVICE COVERAGE RATIO = ((1)-(6))/(7)					3 8	3 8	3 8	3 8	3 8	3 8	3 8	3 8	3 8	3 8	1 9	1 9	2 0	2 0
PROJECT CASH FLOW = (1)-(2)-(3)-(4)-(6)-(8)		20 8	173 3	-43 4	37 8	37 8	32 6	32 6	32 6	32 6	32 6	32 6	32 6	32 6	32 6	32 5	32 4	32 3
FIRR	12 5%																	

TABLE B 2-34

YEREVAN POWER PLANT FEASIBILITY STUDY
FINANCIAL ANALYSIS-TARIFF = $0 0325 / KWH

constant 1998 dollars

Net plant output (MW)	381 20	381 20	381 20	381 20	381 20	381 20	381 20	381 20	381 20	381 20	381 20	381 20	381 20	381 20	381 20	381 20	381 20	381 20	381 20	381 20	381 20
Capacity factor (/)	80 00	80 00	80 00	80 00	80 00	80 00	80 00	80 00	80 00	80 00	80 00	80 00	80 00	80 00	80 00	80 00	80 00	80 00	80 00	80 00	80 00
Trans & distr loss factor (/)	0 00	0 00	0 00	0 00	0 00	0 00	0 00	0 00	0 00	0 00	0 00	0 00	0 00	0 00	0 00	0 00	0 00	0 00	0 00	0 00	0 00
Tariff rate ($/MWh)	0 0325	0 0325	0 0325	0 0325	0 0325	0 0325	0 0325	0 0325	0 0325	0 0325	0 0325	0 0325	0 0325	0 0325	0 0325	0 0325	0 0325	0 0325	0 0325	0 0325	0 0325
Fuel cost ($/GCAL)	8 81	8 81	8 81	8 81	8 81	8 81	8 81	8 81	8 81	8 81	8 81	8 81	8 81	8 81	8 81	8 81	8 81	8 81	8 81	8 81	8 81
Loan interest rate (/)	4 00	4 00	4 00	4 00	4 00	4 00	4 00	4 00	4 00	4 00	4 00	4 00	4 00	4 00	4 00	4 00	4 00	4 00	4 00	4 00	4 00
Fixed O&M cost ($/kW/y)	14 03	14 03	14 03	14 03	14 03	14 03	14 03	14 03	14 03	14 03	14 03	14 03	14 03	14 03	14 03	14 03	14 03	14 03	14 03	14 03	14 03
Variable O&M cost ($/MWh)	0 87	0 87	0 87	0 87	0 87	0 87	0 87	0 87	0 87	0 87	0 87	0 87	0 87	0 87	0 87	0 87	0 87	0 87	0 87	0 87	0 87
Annual depreciation (/)	2 86	2 86	2 86	2 86	2 86	2 86	2 86	2 86	2 86	2 86	2 86	2 86	2 86	2 86	2 86	2 86	2 86	2 86	2 86	2 86	2 86
Taxes (/)	25 00	25 00	25 00	25 00	25 00	25 00	25 00	25 00	25 00	25 00	25 00	25 00	25 00	25 00	25 00	25 00	25 00	25 00	25 00	25 00	25 00
YEARS	**2018**	**2019**	**2020**	**2021**	**2022**	**2023**	**2024**	**2025**	**2026**	**2027**	**2028**	**2029**	**2030**	**2031**	**2032**	**2033**	**2034**	**2035**	**2036**	**2037**	**2038**
REVENUES																					
Net plant production (GWh)	2671 4	2671 4	2671 4	2671 4	2671 4	2671 4	2671 4	2671 4	2671 4	2671 4	2671 4	2671 4	2671 4	2671 4	2671 4	2671 4	2671 4	2671 4	2671 4	2671 4	2671 4
Trans & dist losses (GWh)	0 0	0 0	0 0	0 0	0 0	0 0	0 0	0 0	0 0	0 0	0 0	0 0	0 0	0 0	0 0	0 0	0 0	0 0	0 0	0 0	0 0
Energy sales (GWh)	2671 4	2671 4	2671 4	2671 4	2671 4	2671 4	2671 4	2671 4	2671 4	2671 4	2671 4	2671 4	2671 4	2671 4	2671 4	2671 4	2671 4	2671 4	2671 4	2671 4	2671 4
(1) Annual revenues ($M)	86 8	86 8	86 8	86 8	86 8	86 8	86 8	86 8	86 8	86 8	86 8	86 8	86 8	86 8	86 8	86 8	86 8	86 8	86 8	86 8	86 8
CAPITAL EXPENDITURES																					
(2) EPC contractors cost ($M)																					
(3) Other capital costs ($M)																					
(4) Owner's cost ($M)																					
(5) Interest During Construction																					
OPERATING EXPENSES																					
Fuel cost ($M)	41 4	41 4	41 4	41 4	41 4	41 4	41 4	41 4	41 4	41 4	41 4	41 4	41 4	41 4	41 4	41 4	41 4	41 4	41 4	41 4	41 4
Fixed O&M cost ($M)	5 3	5 3	5 3	5 3	5 3	5 3	5 3	5 3	5 3	5 3	5 3	5 3	5 3	5 3	5 3	5 3	5 3	5 3	5 3	5 3	5 3
Variable O&M cost ($M)	2 3	2 3	2 3	2 3	2 3	2 3	2 3	2 3	2 3	2 3	2 3	2 3	2 3	2 3	2 3	2 3	2 3	2 3	2 3	2 3	2 3
(6) Subtotal expenses ($M)	49 1	49 1	49 1	49 1	49 1	49 1	49 1	49 1	49 1	49 1	49 1	49 1	49 1	49 1	49 1	49 1	49 1	49 1	49 1	49 1	49 1
FINANCIAL																					
Interest payment ($M)	8 2	7 8	7 4	7 0	6 6	6 2	5 8	5 4	5 0	4 6	4 2	3 8	3 4	3 0	2 6	2 2	1 8	1 4	1 0	0 6	0 2
Principal payment ($M)	10 0	10 0	10 0	10 0	10 0	10 0	10 0	10 0	10 0	10 0	10 0	10 0	10 0	10 0	10 0	10 0	10 0	10 0	10 0	10 0	10 0
(7) Subtotal ($M)	18 3	17 9	17 5	17 1	16 7	16 3	15 9	15 5	15 0	14 6	14 2	13 8	13 4	13 0	12 6	12 2	11 8	11 4	11 0	10 6	10 2
DEPRECIATION ($M)	7 2	7 2	7 2	7 2	7 2	7 2	7 2	7 2	7 2	7 2	7 2	7 2	7 2	7 2	7 2	7 2	7 2	7 2	7 2	7 2	7 2
PRETAX PROFITS ($M)	22 4	22 8	23 2	23 6	24 0	24 4	24 8	25 2	25 6	26 0	26 4	26 8	27 2	27 6	28 0	28 4	28 8	29 2	29 6	30 0	30 4
(8) TAXES ($M)	5 6	5 7	5 8	5 9	6 0	6 1	6 2	6 3	6 4	6 5	6 6	6 7	6 8	6 9	7 0	7 1	7 2	7 3	7 4	7 5	7 6
AFTER TAX PROFITS ($M)	16 8	17 1	17 4	17 7	18 0	18 3	18 6	18 9	19 2	19 5	19 8	20 1	20 4	20 7	21 0	21 3	21 6	21 9	22 2	22 5	22 8
DEBT SERVICE COVERAGE RATIO = ((1)-(6))/(7)	2 1	2 1	2 2	2 2	2 3	2 3	2 4	2 4	2 5	2 6	2 6	2 7	2 8	2 9	3 0	3 1	3 2	3 3	3 4	3 5	3 7
PROJECT CASH FLOW = (1)-(2)-(3)-(4)-(6)-(8)	32 2	32 1	32 0	31 9	31 8	31 7	31 6	31 5	31 4	31 3	31 2	31 1	31 0	30 9	30 8	30 7	30 6	30 5	30 4	30 3	30 2

TABLE B 2-35

YEREVAN POWER PLANT FEASIBILITY STUDY
FINANCIAL ANALYSIS-TARIFF = $0 035 / KWH

constant 1998 dollars

Net plant output (MW)	381 20	381 20	381 20	381 20	381 20	381 20	381 20	381 20	381 20	381 20	381 20	381 20	381 20	381 20	381 20	381 20	381 20	381 20
Capacity factor (%)	80 00	80 00	80 00	80 00	80 00	80 00	80 00	80 00	80 00	80 00	80 00	80 00	80 00	80 00	80 00	80 00	80 00	80 00
Trans & distr loss factor (/)	0 00	0 00	0 00	0 00	0 00	0 00	0 00	0 00	0 00	0 00	0 00	0 00	0 00	0 00	0 00	0 00	0 00	0 00
Tariff rate ($/MWh)	0 035	0 035	0 035	0 035	0 035	0 035	0 035	0 035	0 035	0 035	0 035	0 035	0 035	0 035	0 035	0 035	0 035	0 035
Fuel cost ($/GCAL)	8 81	8 81	8 81	8 81	8 81	8 81	8 81	8 81	8 81	8 81	8 81	8 81	8 81	8 81	8 81	8 81	8 81	8 81
Loan interest rate (/)	4 00	4 00	4 00	4 00	4 00	4 00	4 00	4 00	4 00	4 00	4 00	4 00	4 00	4 00	4 00	4 00	4 00	4 00
Fixed O&M cost ($/kW/y)	0 00	0 00	0 00	0 00	14 03	14 03	14 03	14 03	14 03	14 03	14 03	14 03	14 03	14 03	14 03	14 03	14 03	14 03
Variable O&M cost ($/MWh)	0 00	0 00	0 00	0 00	0 87	0 87	0 87	0 87	0 87	0 87	0 87	0 87	0 87	0 87	0 87	0 87	0 87	0 87
Annual depreciation (/)	0 00	0 00	0 00	0 00	2 86	2 86	2 86	2 86	2 86	2 86	2 86	2 86	2 86	2 86	2 86	2 86	2 86	2 86
Taxes (/)	25 00	25 00	25 00	25 00	25 00	25 00	25 00	25 00	25 00	25 00	25 00	25 00	25 00	25 00	25 00	25 00	25 00	25 00
YEARS	**2000**	**2001**	**2002**	**2003**	**2004**	**2005**	**2006**	**2007**	**2008**	**2009**	**2010**	**2011**	**2012**	**2013**	**2014**	**2015**	**2016**	**2017**
REVENUES																		
Net plant production (GWh)	0 0	0 0	0 0	0 0	2671 4	2671 4	2671 4	2671 4	2671 4	2671 4	2671 4	2671 4	2671 4	2671 4	2671 4	2671 4	2671 4	2671 4
Trans & dist losses (GWh)					0 0	0 0	0 0	0 0	0 0	0 0	0 0	0 0	0 0	0 0	0 0	0 0	0 0	0 0
Energy sales (GWh)					2671 4	2671 4	2671 4	2671 4	2671 4	2671 4	2671 4	2671 4	2671 4	2671 4	2671 4	2671 4	2671 4	2671 4
(1) Annual revenues ($M)					93 5	93 5	93 5	93 5	93 5	93 5	93 5	93 5	93 5	93 5	93 5	93 5	93 5	93 5
CAPITAL EXPENDITURES																		
(2) EPC contractors cost ($M)		19 0	170 9	33 2														
(3) Other capital costs ($M)		0 0	0 0	0 0														
(4) Owner's cost ($M)		1 8	2 4	10 2														
(5) Interest During Construction		0 2	4 3	8 8														
OPERATING EXPENSES																		
Fuel cost ($M)					41 4	41 4	41 4	41 4	41 4	41 4	41 4	41 4	41 4	41 4	41 4	41 4	41 4	41 4
Fixed O&M cost ($M)					5 3	5 3	5 3	5 3	5 3	5 3	5 3	5 3	5 3	5 3	5 3	5 3	5 3	5 3
Variable O&M cost ($M)					2 3	2 3	2 3	2 3	2 3	2 3	2 3	2 3	2 3	2 3	2 3	2 3	2 3	2 3
(6) Subtotal expenses ($M)	0 0	0 0	0 0	0 0	49 1	49 1	49 1	49 1	49 1	49 1	49 1	49 1	49 1	49 1	49 1	49 1	49 1	49 1
FINANCIAL																		
Interest payment ($M)	0 0	0 4	4 3	8 8	10 0	10 0	10 0	10 0	10 0	10 0	10 0	10 0	10 0	10 0	9 8	9 4	9 0	8 6
Principal payment ($M)	0 0	0 0	0 0	0 0	0 0	0 0	0 0	0 0	0 0	0 0	0 0	0 0	0 0	0 0	10 0	10 0	10 0	10 0
(7) Subtotal ($M)	0 0	0 4	4 3	8 8	10 0	10 0	10 0	10 0	10 0	10 0	10 0	10 0	10 0	10 0	19 9	19 5	19 1	18 7
DEPRECIATION ($M)	0 0	0 0	0 0	0 0	7 2	7 2	7 2	7 2	7 2	7 2	7 2	7 2	7 2	7 2	7 2	7 2	7 2	7 2
PRETAX PROFITS ($M)	0 0	-0 4	-4 3	-8 8	27 2	27 2	27 2	27 2	27 2	27 2	27 2	27 2	27 2	27 2	27 4	27 8	28 2	28 6
(8) TAXES ($M)	0 0	0 0	0 0	0 0	0 0	0 0	6 8	6 8	6 8	6 8	6 8	6 8	6 8	6 8	6 9	7 0	7 1	7 2
AFTER TAX PROFITS ($M)	0 0	-0 4	-4 3	-8 8	27 2	27 2	20 4	20 4	20 4	20 4	20 4	20 4	20 4	20 4	20 6	20 9	21 2	21 5
DEBT SERVICE COVERAGE RATIO = ((1)-(6))/(7)					4 4	4 4	4 4	4 4	4 4	4 4	4 4	4 4	4 4	4 4	2 2	2 3	2 3	2 4
PROJECT CASH FLOW = (1)-(2)-(3)-(4)-(6)-(8)		20 8	173 3	-43 4	44 4	44 4	37 6	37 6	37 6	37 6	37 6	37 6	37 6	37 6	37 6	37 5	37 4	37 3
FIRR	14 4%																	

196

TABLE B 2 35

YEREVAN POWER PLANT FEASIBILITY STUDY
FINANCIAL ANALYSIS-TARIFF = $0 035 / KWH

constant 1998 dollars

Net plant output (MW)	381 20	381 20	381 20	381 20	381 20	381 20	381 20	381 20	381 20	381 20	381 20	381 20	381 20	381 20	381 20	381 20	381 20	381 20	381 20	381 20	381 20
Capacity factor (/)	80 00	80 00	80 00	80 00	80 00	80 00	80 00	80 00	80 00	80 00	80 00	80 00	80 00	80 00	80 00	80 00	80 00	80 00	80 00	80 00	80 00
Trans & distr loss factor (/)	0 00	0 00	0 00	0 00	0 00	0 00	0 00	0 00	0 00	0 00	0 00	0 00	0 00	0 00	0 00	0 00	0 00	0 00	0 00	0 00	0 00
Tariff rate ($/MWh)	0 035	0 035	0 035	0 035	0 035	0 035	0 035	0 035	0 035	0 035	0 035	0 035	0 035	0 035	0 035	0 035	0 035	0 035	0 035	0 035	0 035
Fuel cost ($/GCAL)	8 81	8 81	8 81	8 81	8 81	8 81	8 81	8 81	8 81	8 81	8 81	8 81	8 81	8 81	8 81	8 81	8 81	8 81	8 81	8 81	8 81
Loan interest rate (/)	4 00	4 00	4 00	4 00	4 00	4 00	4 00	4 00	4 00	4 00	4 00	4 00	4 00	4 00	4 00	4 00	4 00	4 00	4 00	4 00	4 00
Fixed O&M cost ($/kW/y)	14 03	14 03	14 03	14 03	14 03	14 03	14 03	14 03	14 03	14 03	14 03	14 03	14 03	14 03	14 03	14 03	14 03	14 03	14 03	14 03	14 03
Variable O&M cost ($/MWh)	0 87	0 87	0 87	0 87	0 87	0 87	0 87	0 87	0 87	0 87	0 87	0 87	0 87	0 87	0 87	0 87	0 87	0 87	0 87	0 87	0 87
Annual depreciation (/)	2 86	2 86	2 86	2 86	2 86	2 86	2 86	2 86	2 86	2 86	2 86	2 86	2 86	2 86	2 86	2 86	2 86	2 86	2 86	2 86	2 86
Taxes (/)	25 00	25 00	25 00	25 00	25 00	25 00	25 00	25 00	25 00	25 00	25 00	25 00	25 00	25 00	25 00	25 00	25 00	25 00	25 00	25 00	25 00
YEARS	**2018**	**2019**	**2020**	**2021**	**2022**	**2023**	**2024**	**2025**	**2026**	**2027**	**2028**	**2029**	**2030**	**2031**	**2032**	**2033**	**2034**	**2035**	**2036**	**2037**	**2038**
REVENUES																					
Net plant production (GWh)	2671 4	2671 4	2671 4	2671 4	2671 4	2671 4	2671 4	2671 4	2671 4	2671 4	2671 4	2671 4	2671 4	2671 4	2671 4	2671 4	2671 4	2671 4	2671 4	2671 4	2671 4
Trans & dist losses (GWh)	0 0	0 0	0 0	0 0	0 0	0 0	0 0	0 0	0 0	0 0	0 0	0 0	0 0	0 0	0 0	0 0	0 0	0 0	0 0	0 0	0 0
Energy sales (GWh)	2671 4	2671 4	2671 4	2671 4	2671 4	2671 4	2671 4	2671 4	2671 4	2671 4	2671 4	2671 4	2671 4	2671 4	2671 4	2671 4	2671 4	2671 4	2671 4	2671 4	2671 4
(1) Annual revenues ($M)	93 5	93 5	93 5	93 5	93 5	93 5	93 5	93 5	93 5	93 5	93 5	93 5	93 5	93 5	93 5	93 5	93 5	93 5	93 5	93 5	93 5
CAPITAL EXPENDITURES																					
(2) EPC contractors cost ($M)																					
(3) Other capital costs ($M)																					
(4) Owner's cost ($M)																					
(5) Interest During Construction																					
OPERATING EXPENSES																					
Fuel cost ($M)	41 4	41 4	41 4	41 4	41 4	41 4	41 4	41 4	41 4	41 4	41 4	41 4	41 4	41 4	41 4	41 4	41 4	41 4	41 4	41 4	41 4
Fixed O&M cost ($M)	5 3	5 3	5 3	5 3	5 3	5 3	5 3	5 3	5 3	5 3	5 3	5 3	5 3	5 3	5 3	5 3	5 3	5 3	5 3	5 3	5 3
Variable O&M cost ($M)	2 3	2 3	2 3	2 3	2 3	2 3	2 3	2 3	2 3	2 3	2 3	2 3	2 3	2 3	2 3	2 3	2 3	2 3	2 3	2 3	2 3
(6) Subtotal expenses ($M)	49 1	49 1	49 1	49 1	49 1	49 1	49 1	49 1	49 1	49 1	49 1	49 1	49 1	49 1	49 1	49 1	49 1	49 1	49 1	49 1	49 1
FINANCIAL																					
Interest payment ($M)	8 2	7 8	7 4	7 0	6 6	6 2	5 8	5 4	5 0	4 6	4 2	3 8	3 4	3 0	2 6	2 2	1 8	1 4	1 0	0 6	0 2
Principal payment ($M)	10 0	10 0	10 0	10 0	10 0	10 0	10 0	10 0	10 0	10 0	10 0	10 0	10 0	10 0	10 0	10 0	10 0	10 0	10 0	10 0	10 0
(7) Subtotal ($M)	18 3	17 9	17 5	17 1	16 7	16 3	15 9	15 5	15 0	14 6	14 2	13 8	13 4	13 0	12 6	12 2	11 8	11 4	11 0	10 6	10 2
DEPRECIATION ($M)	7 2	7 2	7 2	7 2	7 2	7 2	7 2	7 2	7 2	7 2	7 2	7 2	7 2	7 2	7 2	7 2	7 2	7 2	7 2	7 2	7 2
PRETAX PROFITS ($M)	29 0	29 4	29 8	30 2	30 6	31 0	31 4	31 8	32 2	32 6	33 0	33 5	33 9	34 3	34 7	35 1	35 5	35 9	36 3	36 7	37 1
(8) TAXES ($M)	7 3	7 4	7 5	7 6	7 7	7 8	7 9	8 0	8 1	8 2	8 3	8 4	8 5	8 6	8 7	8 8	8 9	9 0	9 1	9 2	9 3
AFTER TAX PROFITS ($M)	21 8	22 1	22 4	22 7	23 0	23 3	23 6	23 9	24 2	24 5	24 8	25 1	25 4	25 7	26 0	26 3	26 6	26 9	27 2	27 5	27 8
DEBT SERVICE COVERAGE RATIO = ((1)-(6))/(7)	2 4	2 5	2 5	2 6	2 7	2 7	2 8	2 9	3 0	3 0	3 1	3 2	3 3	3 4	3 5	3 6	3 8	3 9	4 0	4 2	4 3
PROJECT CASH FLOW = (1)-(2)-(3)-(4)-(6)-(8)	37 2	37 1	37 0	36 9	36 8	36 7	36 6	36 5	36 4	36 3	36 2	36 1	36 0	35 9	35 8	35 7	35 6	35 5	35 4	35 3	35 2

TABLE B 2-36

YEREVAN POWER PLANT FEASIBILITY STUDY
FINANCIAL ANALYSIS-BASE CASE TARIFF & CAPITAL COSTS +10%

constant 1998 dollars

Net plant output (MW)	381 20	381 20	381 20	381 20	381 20	381 20	381 20	381 20	381 20	381 20	381 20	381 20	381 20	381 20	381 20	381 20	381 20	381 20
Capacity factor (/)	80 00	80 00	80 00	80 00	80 00	80 00	80 00	80 00	80 00	80 00	80 00	80 00	80 00	80 00	80 00	80 00	80 00	80 00
Trans & distr loss factor (/)	0 00	0 00	0 00	0 00	0 00	0 00	0 00	0 00	0 00	0 00	0 00	0 00	0 00	0 00	0 00	0 00	0 00	0 00
Tariff rate ($/MWh)	0 030	0 030	0 030	0 030	0 030	0 030	0 030	0 030	0 030	0 030	0 030	0 030	0 030	0 030	0 030	0 030	0 030	0 030
Fuel cost ($/GCAL)	8 81	8 81	8 81	8 81	8 81	8 81	8 81	8 81	8 81	8 81	8 81	8 81	8 81	8 81	8 81	8 81	8 81	8 81
Loan interest rate (%)	4 00	4 00	4 00	4 00	4 00	4 00	4 00	4 00	4 00	4 00	4 00	4 00	4 00	4 00	4 00	4 00	4 00	4 00
Fixed O&M cost ($/kW/y)	0 00	0 00	0 00	0 00	14 03	14 03	14 03	14 03	14 03	14 03	14 03	14 03	14 03	14 03	14 03	14 03	14 03	14 03
Variable O&M cost ($/MWh)	0 00	0 00	0 00	0 00	0 87	0 87	0 87	0 87	0 87	0 87	0 87	0 87	0 87	0 87	0 87	0 87	0 87	0 87
Annual depreciation (/o)	0 00	0 00	0 00	0 00	2 86	2 86	2 86	2 86	2 86	2 86	2 86	2 86	2 86	2 86	2 86	2 86	2 86	2 86
Taxes (/)	25 00	25 00	25 00	25 00	25 00	25 00	25 00	25 00	25 00	25 00	25 00	25 00	25 00	25 00	25 00	25 00	25 00	25 00
YEARS	**2000**	**2001**	**2002**	**2003**	**2004**	**2005**	**2006**	**2007**	**2008**	**2009**	**2010**	**2011**	**2012**	**2013**	**2014**	**2015**	**2016**	**2017**
REVENUES																		
Net plant production (GWh)	0 0	0 0	0 0	0 0	2671 4	2671 4	2671 4	2671 4	2671 4	2671 4	2671 4	2671 4	2671 4	2671 4	2671 4	2671 4	2671 4	2671 4
Trans & dist losses (GWh)					0 0	0 0	0 0	0 0	0 0	0 0	0 0	0 0	0 0	0 0	0 0	0 0	0 0	0 0
Energy sales (GWh)					2671 4	2671 4	2671 4	2671 4	2671 4	2671 4	2671 4	2671 4	2671 4	2671 4	2671 4	2671 4	2671 4	2671 4
(1) Annual revenues ($M)					80 1	80 1	80 1	80 1	80 1	80 1	80 1	80 1	80 1	80 1	80 1	80 1	80 1	80 1
CAPITAL EXPENDITURES																		
(2) EPC contractors cost ($M)		20 9	188 0	36 6														
(3) Other capital costs ($M)		0 0	0 0	0 0														
(4) Owner's cost ($M)		2 0	2 6	11 2														
(5) Interest During Construction		0 2	4 7	9 7														
OPERATING EXPENSES																		
Fuel cost ($M)					41 4	41 4	41 4	41 4	41 4	41 4	41 4	41 4	41 4	41 4	41 4	41 4	41 4	41 4
Fixed O&M cost ($M)					5 3	5 3	5 3	5 3	5 3	5 3	5 3	5 3	5 3	5 3	5 3	5 3	5 3	5 3
Variable O&M cost ($M)					2 3	2 3	2 3	2 3	2 3	2 3	2 3	2 3	2 3	2 3	2 3	2 3	2 3	2 3
(6) Subtotal expenses ($M)	0 0	0 0	0 0	0 0	49 1	49 1	49 1	49 1	49 1	49 1	49 1	49 1	49 1	49 1	49 1	49 1	49 1	49 1
FINANCIAL																		
Interest payment ($M)	0 0	0 5	4 7	9 7	11 0	11 0	11 0	11 0	11 0	11 0	11 0	11 0	11 0	11 0	10 8	10 4	9 9	9 5
Principal payment ($M)	0 0	0 0	0 0	0 0	0 0	0 0	0 0	0 0	0 0	0 0	0 0	0 0	0 0	0 0	11 0	11 0	11 0	11 0
(7) Subtotal ($M)	0 0	0 5	4 7	9 7	11 0	11 0	11 0	11 0	11 0	11 0	11 0	11 0	11 0	11 0	21 9	21 4	21 0	20 5
DEPRECIATION ($M)	0 0	0 0	0 0	0 0	7 9	7 9	7 9	7 9	7 9	7 9	7 9	7 9	7 9	7 9	7 9	7 9	7 9	7 9
PRETAX PROFITS ($M)	0 0	-0 5	-4 7	9 7	12 2	12 2	12 2	12 2	12 2	12 2	12 2	12 2	12 2	12 2	12 4	12 8	13 3	13 7
(8) TAXES ($M)	0 0	0 0	0 0	0 0	0 0	0 0	3 0	3 0	3 0	3 0	3 0	3 0	3 0	3 0	3 1	3 2	3 3	3 4
AFTER TAX PROFITS ($M)	0 0	-0 5	-4 7	9 7	12 2	12 2	9 1	9 1	9 1	9 1	9 1	9 1	9 1	9 1	9 3	9 6	9 9	10 3
DEBT SERVICE COVERAGE RATIO = ((1)-(6))/(7)					2 8	2 8	2 8	2 8	2 8	2 8	2 8	2 8	2 8	2 8	1 4	1 5	1 5	1 5
PROJECT CASH FLOW = (1)-(2)-(3)-(4)-(6)-(8)		22 8	190 6	-47 8	31 1	31 1	28 0	28 0	28 0	28 0	28 0	28 0	28 0	28 0	28 0	27 9	27 8	27 6
FIRR	9 5%																	

TABLE B 2 36

YEREVAN POWER PLANT FEASIBILITY STUDY
FINANCIAL ANALYSIS-BASE CASE TARIFF & CAPITAL COSTS +10%

constant 1998 dollars

Net plant output (MW)	381 20	381 20	381 20	381 20	381 20	381 20	381 20	381 20	381 20	381 20	381 20	381 20	381 20	381 20	381 20	381 20	381 20	381 20	381 20	381 20	381 20
Capacity factor (/)	80 00	80 00	80 00	80 00	80 00	80 00	80 00	80 00	80 00	80 00	80 00	80 00	80 00	80 00	80 00	80 00	80 00	80 00	80 00	80 00	80 00
Trans & distr loss factor (/)	0 00	0 00	0 00	0 00	0 00	0 00	0 00	0 00	0 00	0 00	0 00	0 00	0 00	0 00	0 00	0 00	0 00	0 00	0 00	0 00	0 00
Tariff rate ($/MWh)	0 030	0 030	0 030	0 030	0 030	0 030	0 030	0 030	0 030	0 030	0 030	0 030	0 030	0 030	0 030	0 030	0 030	0 030	0 030	0 030	0 030
Fuel cost ($/GCAL)	8 81	8 81	8 81	8 81	8 81	8 81	8 81	8 81	8 81	8 81	8 81	8 81	8 81	8 81	8 81	8 81	8 81	8 81	8 81	8 81	8 81
Loan interest rate (/)	4 00	4 00	4 00	4 00	4 00	4 00	4 00	4 00	4 00	4 00	4 00	4 00	4 00	4 00	4 00	4 00	4 00	4 00	4 00	4 00	4 00
Fixed O&M cost ($/kW/y)	14 03	14 03	14 03	14 03	14 03	14 03	14 03	14 03	14 03	14 03	14 03	14 03	14 03	14 03	14 03	14 03	14 03	14 03	14 03	14 03	14 03
Variable O&M cost ($/MWh)	0 87	0 87	0 87	0 87	0 87	0 87	0 87	0 87	0 87	0 87	0 87	0 87	0 87	0 87	0 87	0 87	0 87	0 87	0 87	0 87	0 87
Annual depreciation (/)	2 86	2 86	2 86	2 86	2 86	2 86	2 86	2 86	2 86	2 86	2 86	2 86	2 86	2 86	2 86	2 86	2 86	2 86	2 86	2 86	2 86
Taxes (/)	25 00	25 00	25 00	25 00	25 00	25 00	25 00	25 00	25 00	25 00	25 00	25 00	25 00	25 00	25 00	25 00	25 00	25 00	25 00	25 00	25 00
YEARS	**2018**	**2019**	**2020**	**2021**	**2022**	**2023**	**2024**	**2025**	**2026**	**2027**	**2028**	**2029**	**2030**	**2031**	**2032**	**2033**	**2034**	**2035**	**2036**	**2037**	**2038**
REVENUES																					
Net plant production (GWh)	2671 4	2671 4	2671 4	2671 4	2671 4	2671 4	2671 4	2671 4	2671 4	2671 4	2671 4	2671 4	2671 4	2671 4	2671 4	2671 4	2671 4	2671 4	2671 4	2671 4	2671 4
Trans & dist losses (GWh)	0 0	0 0	0 0	0 0	0 0	0 0	0 0	0 0	0 0	0 0	0 0	0 0	0 0	0 0	0 0	0 0	0 0	0 0	0 0	0 0	0 0
Energy sales (GWh)	2671 4	2671 4	2671 4	2671 4	2671 4	2671 4	2671 4	2671 4	2671 4	2671 4	2671 4	2671 4	2671 4	2671 4	2671 4	2671 4	2671 4	2671 4	2671 4	2671 4	2671 4
(1) Annual revenues ($M)	80 1	80 1	80 1	80 1	80 1	80 1	80 1	80 1	80 1	80 1	80 1	80 1	80 1	80 1	80 1	80 1	80 1	80 1	80 1	80 1	80 1
CAPITAL EXPENDITURES																					
(2) EPC contractors cost ($M)																					
(3) Other capital costs ($M)																					
(4) Owner's cost ($M)																					
(5) Interest During Construction																					
OPERATING EXPENSES																					
Fuel cost ($M)	41 4	41 4	41 4	41 4	41 4	41 4	41 4	41 4	41 4	41 4	41 4	41 4	41 4	41 4	41 4	41 4	41 4	41 4	41 4	41 4	41 4
Fixed O&M cost ($M)	5 3	5 3	5 3	5 3	5 3	5 3	5 3	5 3	5 3	5 3	5 3	5 3	5 3	5 3	5 3	5 3	5 3	5 3	5 3	5 3	5 3
Variable O&M cost ($M)	2 3	2 3	2 3	2 3	2 3	2 3	2 3	2 3	2 3	2 3	2 3	2 3	2 3	2 3	2 3	2 3	2 3	2 3	2 3	2 3	2 3
(6) Subtotal expenses ($M)	49 1	49 1	49 1	49 1	49 1	49 1	49 1	49 1	49 1	49 1	49 1	49 1	49 1	49 1	49 1	49 1	49 1	49 1	49 1	49 1	49 1
FINANCIAL																					
Interest payment ($M)	9 0	8 6	8 2	7 7	7 3	6 8	6 4	6 0	5 5	5 1	4 6	4 2	3 8	3 3	2 9	2 4	2 0	1 5	1 1	0 7	0 2
Principal payment ($M)	11 0	11 0	11 0	11 0	11 0	11 0	11 0	11 0	11 0	11 0	11 0	11 0	11 0	11 0	11 0	11 0	11 0	11 0	11 0	11 0	11 0
(7) Subtotal ($M)	20 1	19 6	19 2	18 8	18 3	17 9	17 4	17 0	16 6	16 1	15 7	15 2	14 8	14 3	13 9	13 5	13 0	12 6	12 1	11 7	11 3
DEPRECIATION ($M)	7 9	7 9	7 9	7 9	7 9	7 9	7 9	7 9	7 9	7 9	7 9	7 9	7 9	7 9	7 9	7 9	7 9	7 9	7 9	7 9	7 9
PRETAX PROFITS ($M)	14 1	14 6	15 0	15 5	15 9	16 3	16 8	17 2	17 7	18 1	18 6	19 0	19 4	19 9	20 3	20 8	21 2	21 6	22 1	22 5	23 0
(8) TAXES ($M)	3 5	3 6	3 8	3 9	4 0	4 1	4 2	4 3	4 4	4 5	4 6	4 7	4 9	5 0	5 1	5 2	5 3	5 4	5 5	5 6	5 7
AFTER TAX PROFITS ($M)	10 6	10 9	11 3	11 6	11 9	12 3	12 6	12 9	13 3	13 6	13 9	14 2	14 6	14 9	15 2	15 6	15 9	16 2	16 6	16 9	17 2
DEBT SERVICE COVERAGE RATIO = ((1)-(6))/(7)	1 5	1 6	1 6	1 7	1 7	1 7	1 8	1 8	1 9	1 9	2 0	2 0	2 1	2 2	2 2	2 3	2 4	2 5	2 6	2 7	2 8
PROJECT CASH FLOW = (1)-(2)-(3)-(4)-(6)-(8)	27 5	27 4	27 3	27 2	27 1	27 0	26 9	26 8	26 7	26 5	26 4	26 3	26 2	26 1	26 0	25 9	25 8	25 7	25 6	25 4	25 3

199

TABLE B 2-37

YEREVAN POWER PLANT FEASIBILITY STUDY
FINANCIAL ANALYSIS-BASE CASE TARIFF & CAPITAL COSTS -10%

constant 1998 dollars

Net plant output (MW)	381 20	381 20	381 20	381 20	381 20	381 20	381 20	381 20	381 20	381 20	381 20	381 20	381 20	381 20	381 20	381 20	381 20	381 20
Capacity factor (/)	80 00	80 00	80 00	80 00	80 00	80 00	80 00	80 00	80 00	80 00	80 00	80 00	80 00	80 00	80 00	80 00	80 00	80 00
Trans & distr loss factor (/)	0 00	0 00	0 00	0 00	0 00	0 00	0 00	0 00	0 00	0 00	0 00	0 00	0 00	0 00	0 00	0 00	0 00	0 00
Tariff rate ($/MWh)	0 030	0 030	0 030	0 030	0 030	0 030	0 030	0 030	0 030	0 030	0 030	0 030	0 030	0 030	0 030	0 030	0 030	0 030
Fuel cost ($/GCAL)	8 81	8 81	8 81	8 81	8 81	8 81	8 81	8 81	8 81	8 81	8 81	8 81	8 81	8 81	8 81	8 81	8 81	8 81
Loan interest rate (/)	4 00	4 00	4 00	4 00	4 00	4 00	4 00	4 00	4 00	4 00	4 00	4 00	4 00	4 00	4 00	4 00	4 00	4 00
Fixed O&M cost ($/kW/y)	0 00	0 00	0 00	0 00	14 03	14 03	14 03	14 03	14 03	14 03	14 03	14 03	14 03	14 03	14 03	14 03	14 03	14 03
Variable O&M cost ($/MWh)	0 00	0 00	0 00	0 00	0 87	0 87	0 87	0 87	0 87	0 87	0 87	0 87	0 87	0 87	0 87	0 87	0 87	0 87
Annual depreciation (/)	0 00	0 00	0 00	0 00	2 86	2 86	2 86	2 86	2 86	2 86	2 86	2 86	2 86	2 86	2 86	2 86	2 86	2 86
Taxes (/)	25 00	25 00	25 00	25 00	25 00	25 00	25 00	25 00	25 00	25 00	25 00	25 00	25 00	25 00	25 00	25 00	25 00	25 00
YEARS	**2000**	**2001**	**2002**	**2003**	**2004**	**2005**	**2006**	**2007**	**2008**	**2009**	**2010**	**2011**	**2012**	**2013**	**2014**	**2015**	**2016**	**2017**
REVENUES																		
Net plant production (GWh)	0 0	0 0	0 0	0 0	2671 4	2671 4	2671 4	2671 4	2671 4	2671 4	2671 4	2671 4	2671 4	2671 4	2671 4	2671 4	2671 4	2671 4
Trans & dist losses (GWh)					0 0	0 0	0 0	0 0	0 0	0 0	0 0	0 0	0 0	0 0	0 0	0 0	0 0	0 0
Energy sales (GWh)					2671 4	2671 4	2671 4	2671 4	2671 4	2671 4	2671 4	2671 4	2671 4	2671 4	2671 4	2671 4	2671 4	2671 4
(1) Annual revenues ($M)					80 1	80 1	80 1	80 1	80 1	80 1	80 1	80 1	80 1	80 1	80 1	80 1	80 1	80 1
CAPITAL EXPENDITURES																		
(2) EPC contractors cost ($M)		17 1	153 8	29 9														
(3) Other capital costs ($M)		0 0	0 0	0 0														
(4) Owner's cost ($M)		1 6	2 2	9 2														
(5) Interest During Construction		0 2	3 9	7 9														
OPERATING EXPENSES																		
Fuel cost ($M)					41 4	41 4	41 4	41 4	41 4	41 4	41 4	41 4	41 4	41 4	41 4	41 4	41 4	41 4
Fixed O&M cost ($M)					5 3	5 3	5 3	5 3	5 3	5 3	5 3	5 3	5 3	5 3	5 3	5 3	5 3	5 3
Variable O&M cost ($M)					2 3	2 3	2 3	2 3	2 3	2 3	2 3	2 3	2 3	2 3	2 3	2 3	2 3	2 3
(6) Subtotal expenses ($M)	0 0	0 0	0 0	0 0	49 1	49 1	49 1	49 1	49 1	49 1	49 1	49 1	49 1	49 1	49 1	49 1	49 1	49 1
FINANCIAL																		
Interest payment ($M)	0 0	0 4	3 9	7 9	9 0	9 0	9 0	9 0	9 0	9 0	9 0	9 0	9 0	9 0	8 8	8 5	8 1	7 8
Principal payment ($M)	0 0	0 0	0 0	0 0	0 0	0 0	0 0	0 0	0 0	0 0	0 0	0 0	0 0	0 0	9 0	9 0	9 0	9 0
(7) Subtotal ($M)	0 0	0 4	3 9	7 9	9 0	9 0	9 0	9 0	9 0	9 0	9 0	9 0	9 0	9 0	17 9	17 5	17 2	16 8
DEPRECIATION ($M)	0 0	0 0	0 0	0 0	6 4	6 4	6 4	6 4	6 4	6 4	6 4	6 4	6 4	6 4	6 4	6 4	6 4	6 4
PRETAX PROFITS ($M)	0 0	-0 4	3 9	7 9	15 6	15 6	15 6	15 6	15 6	15 6	15 6	15 6	15 6	15 6	15 8	16 1	16 5	16 9
(8) TAXES ($M)	0 0	0 0	0 0	0 0	0 0	0 0	3 9	3 9	3 9	3 9	3 9	3 9	3 9	3 9	3 9	4 0	4 1	4 2
AFTER TAX PROFITS ($M)	0 0	-0 4	-3 9	7 9	15 6	15 6	11 7	11 7	11 7	11 7	11 7	11 7	11 7	11 7	11 8	12 1	12 4	12 6
DEBT SERVICE COVERAGE RATIO = ((1)-(6))/(7)					3 4	3 4	3 4	3 4	3 4	3 4	3 4	3 4	3 4	3 4	1 7	1 8	1 8	1 9
PROJECT CASH FLOW = (1)-(2)-(3)-(4)-(6)-(8)		18 7	156 0	-39 1	31 1	31 1	27 2	27 2	27 2	27 2	27 2	27 2	27 2	27 2	27 1	27 0	26 9	26 9
FIRR	11 5%																	

200

TABLE B 2 37

YEREVAN POWER PLANT FEASIBILITY STUDY
FINANCIAL ANALYSIS-BASE CASE TARIFF & CAPITAL COSTS -10%

constant 1998 dollars

Net plant output (MW)	381 20	381 20	381 20	381 20	381 20	381 20	381 20	381 20	381 20	381 20	381 20	381 20	381 20	381 20	381 20	381 20	381 20	381 20	381 20	381 20	381 20
Capacity factor (/)	80 00	80 00	80 00	80 00	80 00	80 00	80 00	80 00	80 00	80 00	80 00	80 00	80 00	80 00	80 00	80 00	80 00	80 00	80 00	80 00	80 00
Trans & distr loss factor (/)	0 00	0 00	0 00	0 00	0 00	0 00	0 00	0 00	0 00	0 00	0 00	0 00	0 00	0 00	0 00	0 00	0 00	0 00	0 00	0 00	0 00
Tariff rate ($/MWh)	0 030	0 030	0 030	0 030	0 030	0 030	0 030	0 030	0 030	0 030	0 030	0 030	0 030	0 030	0 030	0 030	0 030	0 030	0 030	0 030	0 030
Fuel cost ($/GCAL)	8 81	8 81	8 81	8 81	8 81	8 81	8 81	8 81	8 81	8 81	8 81	8 81	8 81	8 81	8 81	8 81	8 81	8 81	8 81	8 81	8 81
Loan interest rate (/)	4 00	4 00	4 00	4 00	4 00	4 00	4 00	4 00	4 00	4 00	4 00	4 00	4 00	4 00	4 00	4 00	4 00	4 00	4 00	4 00	4 00
Fixed O&M cost ($/kW/y)	14 03	14 03	14 03	14 03	14 03	14 03	14 03	14 03	14 03	14 03	14 03	14 03	14 03	14 03	14 03	14 03	14 03	14 03	14 03	14 03	14 03
Variable O&M cost ($/MWh)	0 87	0 87	0 87	0 87	0 87	0 87	0 87	0 87	0 87	0 87	0 87	0 87	0 87	0 87	0 87	0 87	0 87	0 87	0 87	0 87	0 87
Annual depreciation (/)	2 86	2 86	2 86	2 86	2 86	2 86	2 86	2 86	2 86	2 86	2 86	2 86	2 86	2 86	2 86	2 86	2 86	2 86	2 86	2 86	2 86
Taxes (/)	25 00	25 00	25 00	25 00	25 00	25 00	25 00	25 00	25 00	25 00	25 00	25 00	25 00	25 00	25 00	25 00	25 00	25 00	25 00	25 00	25 00
YEARS	**2018**	**2019**	**2020**	**2021**	**2022**	**2023**	**2024**	**2025**	**2026**	**2027**	**2028**	**2029**	**2030**	**2031**	**2032**	**2033**	**2034**	**2035**	**2036**	**2037**	**2038**
REVENUES																					
Net plant production (GWh)	2671 4	2671 4	2671 4	2671 4	2671 4	2671 4	2671 4	2671 4	2671 4	2671 4	2671 4	2671 4	2671 4	2671 4	2671 4	2671 4	2671 4	2671 4	2671 4	2671 4	2671 4
Trans & dist losses (GWh)	0 0	0 0	0 0	0 0	0 0	0 0	0 0	0 0	0 0	0 0	0 0	0 0	0 0	0 0	0 0	0 0	0 0	0 0	0 0	0 0	0 0
Energy sales (GWh)	2671 4	2671 4	2671 4	2671 4	2671 4	2671 4	2671 4	2671 4	2671 4	2671 4	2671 4	2671 4	2671 4	2671 4	2671 4	2671 4	2671 4	2671 4	2671 4	2671 4	2671 4
(1) Annual revenues ($M)	80 1	80 1	80 1	80 1	80 1	80 1	80 1	80 1	80 1	80 1	80 1	80 1	80 1	80 1	80 1	80 1	80 1	80 1	80 1	80 1	80 1
CAPITAL EXPENDITURES																					
(2) EPC contractors cost ($M)																					
(3) Other capital costs ($M)																					
(4) Owner's cost ($M)																					
(5) Interest During Construction																					
OPERATING EXPENSES																					
Fuel cost ($M)	41 4	41 4	41 4	41 4	41 4	41 4	41 4	41 4	41 4	41 4	41 4	41 4	41 4	41 4	41 4	41 4	41 4	41 4	41 4	41 4	41 4
Fixed O&M cost ($M)	5 3	5 3	5 3	5 3	5 3	5 3	5 3	5 3	5 3	5 3	5 3	5 3	5 3	5 3	5 3	5 3	5 3	5 3	5 3	5 3	5 3
Variable O&M cost ($M)	2 3	2 3	2 3	2 3	2 3	2 3	2 3	2 3	2 3	2 3	2 3	2 3	2 3	2 3	2 3	2 3	2 3	2 3	2 3	2 3	2 3
(6) Subtotal expenses ($M)	49 1	49 1	49 1	49 1	49 1	49 1	49 1	49 1	49 1	49 1	49 1	49 1	49 1	49 1	49 1	49 1	49 1	49 1	49 1	49 1	49 1
FINANCIAL																					
Interest payment ($M)	7 4	7 0	6 7	6 3	6 0	5 6	5 2	4 9	4 5	4 2	3 8	3 4	3 1	2 7	2 3	2 0	1 6	1 3	0 9	0 5	0 2
Principal payment ($M)	9 0	9 0	9 0	9 0	9 0	9 0	9 0	9 0	9 0	9 0	9 0	9 0	9 0	9 0	9 0	9 0	9 0	9 0	9 0	9 0	9 0
(7) Subtotal ($M)	16 4	16 1	15 7	15 4	15 0	14 6	14 3	13 9	13 5	13 2	12 8	12 5	12 1	11 7	11 4	11 0	10 7	10 3	9 9	9 6	9 2
DEPRECIATION ($M)	6 4	6 4	6 4	6 4	6 4	6 4	6 4	6 4	6 4	6 4	6 4	6 4	6 4	6 4	6 4	6 4	6 4	6 4	6 4	6 4	6 4
PRETAX PROFITS ($M)	17 2	17 6	17 9	18 3	18 7	19 0	19 4	19 7	20 1	20 5	20 8	21 2	21 6	21 9	22 3	22 6	23 0	23 4	23 7	24 1	24 4
(8) TAXES ($M)	4 3	4 4	4 5	4 6	4 7	4 8	4 8	4 9	5 0	5 1	5 2	5 3	5 4	5 5	5 6	5 7	5 7	5 8	5 9	6 0	6 1
AFTER TAX PROFITS ($M)	12 9	13 2	13 5	13 7	14 0	14 3	14 5	14 8	15 1	15 4	15 6	15 9	16 2	16 4	16 7	17 0	17 2	17 5	17 8	18 1	18 3
DEBT SERVICE COVERAGE RATIO = ((1)-(6))/(7)	1 9	1 9	2 0	2 0	2 1	2 1	2 2	2 2	2 3	2 4	2 4	2 5	2 6	2 6	2 7	2 8	2 9	3 0	3 1	3 2	3 4
PROJECT CASH FLOW = (1)-(2)-(3)-(4)-(6)-(8)	26 8	26 7	26 6	26 5	26 4	26 3	26 2	26 1	26 0	26 0	25 9	25 8	25 7	25 6	25 5	25 4	25 3	25 2	25 1	25 1	25 0

TABLE B 2-38

YEREVAN POWER PLANT FEASIBILITY STUDY
FINANCIAL ANALYSIS-BASE CASE TARIFF & GAS PRICE +10%

constant 1998 dollars

Net plant output (MW)	381 20	381 20	381 20	381 20	381 20	381 20	381 20	381 20	381 20	381 20	381 20	381 20	381 20	381 20	381 20	381 20	381 20	381 20
Capacity factor (/o)	80 00	80 00	80 00	80 00	80 00	80 00	80 00	80 00	80 00	80 00	80 00	80 00	80 00	80 00	80 00	80 00	80 00	80 00
Trans & distr loss factor (/)	0 00	0 00	0 00	0 00	0 00	0 00	0 00	0 00	0 00	0 00	0 00	0 00	0 00	0 00	0 00	0 00	0 00	0 00
Tariff rate ($/MWh)	0 030	0 030	0 030	0 030	0 030	0 030	0 030	0 030	0 030	0 030	0 030	0 030	0 030	0 030	0 030	0 030	0 030	0 030
Fuel cost ($/GCAL)	9 69	9 69	9 69	9 69	9 69	9 69	9 69	9 69	9 69	9 69	9 69	9 69	9 69	9 69	9 69	9 69	9 69	9 69
Loan interest rate (%)	4 00	4 00	4 00	4 00	4 00	4 00	4 00	4 00	4 00	4 00	4 00	4 00	4 00	4 00	4 00	4 00	4 00	4 00
Fixed O&M cost ($/kW/y)	0 00	0 00	0 00	0 00	14 03	14 03	14 03	14 03	14 03	14 03	14 03	14 03	14 03	14 03	14 03	14 03	14 03	14 03
Variable O&M cost ($/MWh)	0 00	0 00	0 00	0 00	0 87	0 87	0 87	0 87	0 87	0 87	0 87	0 87	0 87	0 87	0 87	0 87	0 87	0 87
Annual depreciation (/)	0 00	0 00	0 00	0 00	2 86	2 86	2 86	2 86	2 86	2 86	2 86	2 86	2 86	2 86	2 86	2 86	2 86	2 86
Taxes (/o)	25 00	25 00	25 00	25 00	25 00	25 00	25 00	25 00	25 00	25 00	25 00	25 00	25 00	25 00	25 00	25 00	25 00	25 00
YEARS	**2000**	**2001**	**2002**	**2003**	**2004**	**2005**	**2006**	**2007**	**2008**	**2009**	**2010**	**2011**	**2012**	**2013**	**2014**	**2015**	**2016**	**2017**
REVENUES																		
Net plant production (GWh)	0 0	0 0	0 0	0 0	2671 4	2671 4	2671 4	2671 4	2671 4	2671 4	2671 4	2671 4	2671 4	2671 4	2671 4	2671 4	2671 4	2671 4
Trans & dist losses (GWh)					0 0	0 0	0 0	0 0	0 0	0 0	0 0	0 0	0 0	0 0	0 0	0 0	0 0	0 0
Energy sales (GWh)					2671 4	2671 4	2671 4	2671 4	2671 4	2671 4	2671 4	2671 4	2671 4	2671 4	2671 4	2671 4	2671 4	2671 4
(1) Annual revenues ($M)					80 1	80 1	80 1	80 1	80 1	80 1	80 1	80 1	80 1	80 1	80 1	80 1	80 1	80 1
CAPITAL EXPENDITURES																		
(2) EPC contractors cost ($M)		19 0	170 9	33 2														
(3) Other capital costs ($M)		0 0	0 0	0 0														
(4) Owner's cost ($M)		1 6	2 4	10 2														
(5) Interest During Construction		0 2	4 3	8 8														
OPERATING EXPENSES																		
Fuel cost ($M)					45 5	45 5	45 5	45 5	45 5	45 5	45 5	45 5	45 5	45 5	45 5	45 5	45 5	45 5
Fixed O&M cost ($M)					5 3	5 3	5 3	5 3	5 3	5 3	5 3	5 3	5 3	5 3	5 3	5 3	5 3	5 3
Variable O&M cost ($M)					2 3	2 3	2 3	2 3	2 3	2 3	2 3	2 3	2 3	2 3	2 3	2 3	2 3	2 3
(6) Subtotal expenses ($M)	0 0	0 0	0 0	0 0	53 2	53 2	53 2	53 2	53 2	53 2	53 2	53 2	53 2	53 2	53 2	53 2	53 2	53 2
FINANCIAL																		
Interest payment ($M)	0 0	0 4	4 3	8 8	10 0	10 0	10 0	10 0	10 0	10 0	10 0	10 0	10 0	10 0	9 8	9 4	9 0	8 6
Principal payment ($M)	0 0	0 0	0 0	0 0	0 0	0 0	0 0	0 0	0 0	0 0	0 0	0 0	0 0	0 0	10 0	10 0	10 0	10 0
(7) Subtotal ($M)	0 0	0 4	4 3	8 8	10 0	10 0	10 0	10 0	10 0	10 0	10 0	10 0	10 0	10 0	19 9	19 5	19 1	18 7
DEPRECIATION ($M)	0 0	0 0	0 0	0 0	7 2	7 2	7 2	7 2	7 2	7 2	7 2	7 2	7 2	7 2	7 2	7 2	7 2	7 2
PRETAX PROFITS ($M)	0 0	-0 4	-4 3	-8 8	9 7	9 7	9 7	9 7	9 7	9 7	9 7	9 7	9 7	9 7	9 9	10 3	10 7	11 1
(8) TAXES ($M)	0 0	0 0	0 0	0 0	0 0	0 0	2 4	2 4	2 4	2 4	2 4	2 4	2 4	2 4	2 5	2 6	2 7	2 8
AFTER TAX PROFITS ($M)	0 0	-0 4	-4 3	-8 8	9 7	9 7	7 3	7 3	7 3	7 3	7 3	7 3	7 3	7 3	7 5	7 8	8 1	8 4
DEBT SERVICE COVERAGE RATIO = ((1)-(6))/(7)					2 7	2 7	2 7	2 7	2 7	2 7	2 7	2 7	2 7	2 7	1 4	1 4	1 4	1 4
PROJECT CASH FLOW = (1)-(2)-(3)-(4)-(6)-(8)		20 8	173 3	-43 4	26 9	26 9	24 5	24 5	24 5	24 5	24 5	24 5	24 5	24 5	24 4	24 3	24 2	24 1
FIRR	9 1%																	

202

TABLE B 2-38

YEREVAN POWER PLANT FEASIBILITY STUDY
FINANCIAL ANALYSIS-BASE CASE TARIFF & GAS PRICE +10%

constant 1998 dollars

Net plant output (MW)	381 20	381 20	381 20	381 20	381 20	381 20	381 20	381 20	381 20	381 20	381 20	381 20	381 20	381 20	381 20	381 20	381 20	381 20	381 20	381 20	381 20
Capacity factor (%)	80 00	80 00	80 00	80 00	80 00	80 00	80 00	80 00	80 00	80 00	80 00	80 00	80 00	80 00	80 00	80 00	80 00	80 00	80 00	80 00	80 00
Trans & distr loss factor (/)	0 00	0 00	0 00	0 00	0 00	0 00	0 00	0 00	0 00	0 00	0 00	0 00	0 00	0 00	0 00	0 00	0 00	0 00	0 00	0 00	0 00
Tariff rate ($/MWh)	0 030	0 030	0 030	0 030	0 030	0 030	0 030	0 030	0 030	0 030	0 030	0 030	0 030	0 030	0 030	0 030	0 030	0 030	0 030	0 030	0 030
Fuel cost ($/GCAL)	9 69	9 69	9 69	9 69	9 69	9 69	9 69	9 69	9 69	9 69	9 69	9 69	9 69	9 69	9 69	9 69	9 69	9 69	9 69	9 69	9 69
Loan interest rate (/)	4 00	4 00	4 00	4 00	4 00	4 00	4 00	4 00	4 00	4 00	4 00	4 00	4 00	4 00	4 00	4 00	4 00	4 00	4 00	4 00	4 00
Fixed O&M cost ($/kW/y)	14 03	14 03	14 03	14 03	14 03	14 03	14 03	14 03	14 03	14 03	14 03	14 03	14 03	14 03	14 03	14 03	14 03	14 03	14 03	14 03	14 03
Variable O&M cost ($/MWh)	0 87	0 87	0 87	0 87	0 87	0 87	0 87	0 87	0 87	0 87	0 87	0 87	0 87	0 87	0 87	0 87	0 87	0 87	0 87	0 87	0 87
Annual depreciation (/)	2 86	2 86	2 86	2 86	2 86	2 86	2 86	2 86	2 86	2 86	2 86	2 86	2 86	2 86	2 86	2 86	2 86	2 86	2 86	2 86	2 86
Taxes (/)	25 00	25 00	25 00	25 00	25 00	25 00	25 00	25 00	25 00	25 00	25 00	25 00	25 00	25 00	25 00	25 00	25 00	25 00	25 00	25 00	25 00
YEARS	**2018**	**2019**	**2020**	**2021**	**2022**	**2023**	**2024**	**2025**	**2026**	**2027**	**2028**	**2029**	**2030**	**2031**	**2032**	**2033**	**2034**	**2035**	**2036**	**2037**	**2038**
REVENUES																					
Net plant production (GWh)	2671 4	2671 4	2671 4	2671 4	2671 4	2671 4	2671 4	2671 4	2671 4	2671 4	2671 4	2671 4	2671 4	2671 4	2671 4	2671 4	2671 4	2671 4	2671 4	2671 4	2671 4
Trans & dist losses (GWh)	0 0	0 0	0 0	0 0	0 0	0 0	0 0	0 0	0 0	0 0	0 0	0 0	0 0	0 0	0 0	0 0	0 0	0 0	0 0	0 0	0 0
Energy sales (GWh)	2671 4	2671 4	2671 4	2671 4	2671 4	2671 4	2671 4	2671 4	2671 4	2671 4	2671 4	2671 4	2671 4	2671 4	2671 4	2671 4	2671 4	2671 4	2671 4	2671 4	2671 4
(1) Annual revenues ($M)	80 1	80 1	80 1	80 1	80 1	80 1	80 1	80 1	80 1	80 1	80 1	80 1	80 1	80 1	80 1	80 1	80 1	80 1	80 1	80 1	80 1
CAPITAL EXPENDITURES																					
(2) EPC contractors cost ($M)																					
(3) *Other capital costs ($M)*																					
(4) Owner's cost ($M)																					
(5) Interest During Construction																					
OPERATING EXPENSES																					
Fuel cost ($M)	45 5	45 5	45 5	45 5	45 5	45 5	45 5	45 5	45 5	45 5	45 5	45 5	45 5	45 5	45 5	45 5	45 5	45 5	45 5	45 5	45 5
Fixed O&M cost ($M)	5 3	5 3	5 3	5 3	5 3	5 3	5 3	5 3	5 3	5 3	5 3	5 3	5 3	5 3	5 3	5 3	5 3	5 3	5 3	5 3	5 3
Variable O&M cost ($M)	2 3	2 3	2 3	2 3	2 3	2 3	2 3	2 3	2 3	2 3	2 3	2 3	2 3	2 3	2 3	2 3	2 3	2 3	2 3	2 3	2 3
(6) Subtotal expenses ($M)	53 2	53 2	53 2	53 2	53 2	53 2	53 2	53 2	53 2	53 2	53 2	53 2	53 2	53 2	53 2	53 2	53 2	53 2	53 2	53 2	53 2
FINANCIAL																					
Interest payment ($M)	8 2	7 8	7 4	7 0	6 6	6 2	5 8	5 4	5 0	4 6	4 2	3 8	3 4	3 0	2 6	2 2	1 8	1 4	1 0	0 6	0 2
Principal payment ($M)	10 0	10 0	10 0	10 0	10 0	10 0	10 0	10 0	10 0	10 0	10 0	10 0	10 0	10 0	10 0	10 0	10 0	10 0	10 0	10 0	10 0
(7) Subtotal ($M)	18 3	17 9	17 5	17 1	16 7	16 3	15 9	15 5	15 0	14 6	14 2	13 8	13 4	13 0	12 6	12 2	11 8	11 4	11 0	10 6	10 2
DEPRECIATION ($M)	7 2	7 2	7 2	7 2	7 2	7 2	7 2	7 2	7 2	7 2	7 2	7 2	7 2	7 2	7 2	7 2	7 2	7 2	7 2	7 2	7 2
PRETAX PROFITS ($M)	11 5	11 9	12 3	12 7	13 1	13 5	13 9	14 3	14 7	15 2	15 6	16 0	16 4	16 8	17 2	17 6	18 0	18 4	18 8	19 2	19 6
(8) TAXES ($M)	2 9	3 0	3 1	3 2	3 3	3 4	3 5	3 6	3 7	3 8	3 9	4 0	4 1	4 2	4 3	4 4	4 5	4 6	4 7	4 8	4 9
AFTER TAX PROFITS ($M)	8 7	9 0	9 3	9 6	9 9	10 2	10 5	10 8	11 1	11 4	11 7	12 0	12 3	12 6	12 9	13 2	13 5	13 8	14 1	14 4	14 7
DEBT SERVICE COVERAGE RATIO = ((1)-(6))/(7)	1 5	1 5	1 5	1 6	1 6	1 7	1 7	1 7	1 8	1 8	1 9	1 9	2 0	2 1	2 1	2 2	2 3	2 4	2 4	2 5	2 6
PROJECT CASH FLOW = (1)-(2)-(3)-(4)-(5)-(8)	24 0	23 9	23 8	23 7	23 6	23 5	23 4	23 3	23 2	23 1	23 0	22 9	22 8	22 7	22 6	22 5	22 4	22 3	22 2	22 1	22 0

TABLE B 2 39

YEREVAN POWER PLANT FEASIBILITY STUDY
FINANCIAL ANALYSIS-BASE CASE TARIFF & GAS PRICE -10%

constant 1998 dollars

Net plant output (MW)	381 20	381 20	381 20	381 20	381 20	381 20	381 20	381 20	381 20	381 20	381 20	381 20	381 20	381 20	381 20	381 20	381 20	381 20
Capacity factor (/o)	80 00	80 00	80 00	80 00	80 00	80 00	80 00	80 00	80 00	80 00	80 00	80 00	80 00	80 00	80 00	80 00	80 00	80 00
Trans & distr loss factor (/)	0 00	0 00	0 00	0 00	0 00	0 00	0 00	0 00	0 00	0 00	0 00	0 00	0 00	0 00	0 00	0 00	0 00	0 00
Tariff rate ($/MWh)	0 030	0 030	0 030	0 030	0 030	0 030	0 030	0 030	0 030	0 030	0 030	0 030	0 030	0 030	0 030	0 030	0 030	0 030
Fuel cost ($/GCAL)	7 93	7 93	7 93	7 93	7 93	7 93	7 93	7 93	7 93	7 93	7 93	7 93	7 93	7 93	7 93	7 93	7 93	7 93
Loan interest rate (/)	4 00	4 00	4 00	4 00	4 00	4 00	4 00	4 00	4 00	4 00	4 00	4 00	4 00	4 00	4 00	4 00	4 00	4 00
Fixed O&M cost ($/kW/y)	0 00	0 00	0 00	0 00	14 03	14 03	14 03	14 03	14 03	14 03	14 03	14 03	14 03	14 03	14 03	14 03	14 03	14 03
Variable O&M cost ($/MWh)	0 00	0 00	0 00	0 00	0 87	0 87	0 87	0 87	0 87	0 87	0 87	0 87	0 87	0 87	0 87	0 87	0 87	0 87
Annual depreciation (/)	0 00	0 00	0 00	0 00	2 86	2 86	2 86	2 86	2 86	2 86	2 86	2 86	2 86	2 86	2 86	2 86	2 86	2 86
Taxes (/)	25 00	25 00	25 00	25 00	25 00	25 00	25 00	25 00	25 00	25 00	25 00	25 00	25 00	25 00	25 00	25 00	25 00	25 00
YEARS	**2000**	**2001**	**2002**	**2003**	**2004**	**2005**	**2006**	**2007**	**2008**	**2009**	**2010**	**2011**	**2012**	**2013**	**2014**	**2015**	**2016**	**2017**
REVENUES																		
Net plant production (GWh)	0 0	0 0	0 0	0 0	2671 4	2671 4	2671 4	2671 4	2671 4	2671 4	2671 4	2671 4	2671 4	2671 4	2671 4	2671 4	2671 4	2671 4
Trans & dist losses (GWh)					0 0	0 0	0 0	0 0	0 0	0 0	0 0	0 0	0 0	0 0	0 0	0 0	0 0	0 0
Energy sales (GWh)					2671 4	2671 4	2671 4	2671 4	2671 4	2671 4	2671 4	2671 4	2671 4	2671 4	2671 4	2671 4	2671 4	2671 4
(1) Annual revenues ($M)					80 1	80 1	80 1	80 1	80 1	80 1	80 1	80 1	80 1	80 1	80 1	80 1	80 1	80 1
CAPITAL EXPENDITURES																		
(2) EPC contractors cost ($M)		19 0	170 9	33 2														
(3) Other capital costs ($M)		0 0	0 0	0 0														
(4) Owner's cost ($M)		1 8	2 4	10 2														
(5) Interest During Construction		0 2	4 3	8 8														
OPERATING EXPENSES																		
Fuel cost ($M)					37 3	37 3	37 3	37 3	37 3	37 3	37 3	37 3	37 3	37 3	37 3	37 3	37 3	37 3
Fixed O&M cost ($M)					5 3	5 3	5 3	5 3	5 3	5 3	5 3	5 3	5 3	5 3	5 3	5 3	5 3	5 3
Variable O&M cost ($M)					2 3	2 3	2 3	2 3	2 3	2 3	2 3	2 3	2 3	2 3	2 3	2 3	2 3	2 3
(6) Subtotal expenses ($M)	0 0	0 0	0 0	0 0	44 9	44 9	44 9	44 9	44 9	44 9	44 9	44 9	44 9	44 9	44 9	44 9	44 9	44 9
FINANCIAL																		
Interest payment ($M)	0 0	0 4	4 3	8 8	10 0	10 0	10 0	10 0	10 0	10 0	10 0	10 0	10 0	10 0	9 8	9 4	9 0	8 6
Principal payment ($M)	0 0	0 0	0 0	0 0	0 0	0 0	0 0	0 0	0 0	0 0	0 0	0 0	0 0	0 0	10 0	10 0	10 0	10 0
(7) Subtotal ($M)	0 0	0 4	4 3	8 8	10 0	10 0	10 0	10 0	10 0	10 0	10 0	10 0	10 0	10 0	19 9	19 5	19 1	18 7
DEPRECIATION ($M)	0 0	0 0	0 0	0 0	7 2	7 2	7 2	7 2	7 2	7 2	7 2	7 2	7 2	7 2	7 2	7 2	7 2	7 2
PRETAX PROFITS ($M)	0 0	-0 4	-4 3	-8 8	18 0	18 0	18 0	18 0	18 0	18 0	18 0	18 0	18 0	18 0	18 2	18 6	19 0	19 4
(8) TAXES ($M)	0 0	0 0	0 0	0 0	0 0	0 0	4 5	4 5	4 5	4 5	4 5	4 5	4 5	4 5	4 6	4 7	4 8	4 9
AFTER TAX PROFITS ($M)	0 0	-0 4	-4 3	-8 8	18 0	18 0	13 5	13 5	13 5	13 5	13 5	13 5	13 5	13 5	13 7	14 0	14 3	14 6
DEBT SERVICE COVERAGE RATIO = ((1)-(6))/(7)					3 5	3 5	3 5	3 5	3 5	3 5	3 5	3 5	3 5	3 5	1 8	1 8	1 8	1 9
PROJECT CASH FLOW = (1)-(2)-(3)-(4)-(6)-(8)		20 8	173 3	-43 4	35 2	35 2	30 7	30 7	30 7	30 7	30 7	30 7	30 7	30 7	30 7	30 6	30 5	30 4
FIRR	11 7%																	

TABLE B 2-39

YEREVAN POWER PLANT FEASIBILITY STUDY
FINANCIAL ANALYSIS-BASE CASE TARIFF & GAS PRICE -10%

constant 1998 dollars

Net plant output (MW)	381 20	381 20	381 20	381 20	381 20	381 20	381 20	381 20	381 20	381 20	381 20	381 20	381 20	381 20	381 20	381 20	381 20	381 20	381 20	381 20	381 20
Capacity factor (/)	80 00	80 00	80 00	80 00	80 00	80 00	80 00	80 00	80 00	80 00	80 00	80 00	80 00	80 00	80 00	80 00	80 00	80 00	80 00	80 00	80 00
Trans & distr loss factor (/)	0 00	0 00	0 00	0 00	0 00	0 00	0 00	0 00	0 00	0 00	0 00	0 00	0 00	0 00	0 00	0 00	0 00	0 00	0 00	0 00	0 00
Tariff rate ($/MWh)	0 030	0 030	0 030	0 030	0 030	0 030	0 030	0 030	0 030	0 030	0 030	0 030	0 030	0 030	0 030	0 030	0 030	0 030	0 030	0 030	0 030
Fuel cost ($/GCAL)	7 93	7 93	7 93	7 93	7 93	7 93	7 93	7 93	7 93	7 93	7 93	7 93	7 93	7 93	7 93	7 93	7 93	7 93	7 93	7 93	7 93
Loan interest rate (/)	4 00	4 00	4 00	4 00	4 00	4 00	4 00	4 00	4 00	4 00	4 00	4 00	4 00	4 00	4 00	4 00	4 00	4 00	4 00	4 00	4 00
Fixed O&M cost ($/kW/y)	14 03	14 03	14 03	14 03	14 03	14 03	14 03	14 03	14 03	14 03	14 03	14 03	14 03	14 03	14 03	14 03	14 03	14 03	14 03	14 03	14 03
Variable O&M cost ($/MWh)	0 87	0 87	0 87	0 87	0 87	0 87	0 87	0 87	0 87	0 87	0 87	0 87	0 87	0 87	0 87	0 87	0 87	0 87	0 87	0 87	0 87
Annual depreciation (%)	2 86	2 86	2 86	2 86	2 86	2 86	2 86	2 86	2 86	2 86	2 86	2 86	2 86	2 86	2 86	2 86	2 86	2 86	2 86	2 86	2 86
Taxes (/)	25 00	25 00	25 00	25 00	25 00	25 00	25 00	25 00	25 00	25 00	25 00	25 00	25 00	25 00	25 00	25 00	25 00	25 00	25 00	25 00	25 00
YEARS	**2018**	**2019**	**2020**	**2021**	**2022**	**2023**	**2024**	**2025**	**2026**	**2027**	**2028**	**2029**	**2030**	**2031**	**2032**	**2033**	**2034**	**2035**	**2036**	**2037**	**2038**
REVENUES																					
Net plant production (GWh)	2671 4	2671 4	2671 4	2671 4	2671 4	2671 4	2671 4	2671 4	2671 4	2671 4	2671 4	2671 4	2671 4	2671 4	2671 4	2671 4	2671 4	2671 4	2671 4	2671 4	2671 4
Trans & dist losses (GWh)	0 0	0 0	0 0	0 0	0 0	0 0	0 0	0 0	0 0	0 0	0 0	0 0	0 0	0 0	0 0	0 0	0 0	0 0	0 0	0 0	0 0
Energy sales (GWh)	2671 4	2671 4	2671 4	2671 4	2671 4	2671 4	2671 4	2671 4	2671 4	2671 4	2671 4	2671 4	2671 4	2671 4	2671 4	2671 4	2671 4	2671 4	2671 4	2671 4	2671 4
(1) Annual revenues ($M)	80 1	80 1	80 1	80 1	80 1	80 1	80 1	80 1	80 1	80 1	80 1	80 1	80 1	80 1	80 1	80 1	80 1	80 1	80 1	80 1	80 1
CAPITAL EXPENDITURES																					
(2) EPC contractors cost ($M)																					
(3) Other capital costs ($M)																					
(4) Owner's cost ($M)																					
(5) Interest During Construction																					
OPERATING EXPENSES																					
Fuel cost ($M)	37 3	37 3	37 3	37 3	37 3	37 3	37 3	37 3	37 3	37 3	37 3	37 3	37 3	37 3	37 3	37 3	37 3	37 3	37 3	37 3	37 3
Fixed O&M cost ($M)	5 3	5 3	5 3	5 3	5 3	5 3	5 3	5 3	5 3	5 3	5 3	5 3	5 3	5 3	5 3	5 3	5 3	5 3	5 3	5 3	5 3
Variable O&M cost ($M)	2 3	2 3	2 3	2 3	2 3	2 3	2 3	2 3	2 3	2 3	2 3	2 3	2 3	2 3	2 3	2 3	2 3	2 3	2 3	2 3	2 3
(6) Subtotal expenses ($M)	44 9	44 9	44 9	44 9	44 9	44 9	44 9	44 9	44 9	44 9	44 9	44 9	44 9	44 9	44 9	44 9	44 9	44 9	44 9	44 9	44 9
FINANCIAL																					
Interest payment ($M)	8 2	7 8	7 4	7 0	6 6	6 2	5 8	5 4	5 0	4 6	4 2	3 8	3 4	3 0	2 6	2 2	1 8	1 4	1 0	0 6	0 2
Principal payment ($M)	10 0	10 0	10 0	10 0	10 0	10 0	10 0	10 0	10 0	10 0	10 0	10 0	10 0	10 0	10 0	10 0	10 0	10 0	10 0	10 0	10 0
(7) Subtotal ($M)	18 3	17 9	17 5	17 1	16 7	16 3	15 9	15 5	15 0	14 6	14 2	13 8	13 4	13 0	12 6	12 2	11 8	11 4	11 0	10 6	10 2
DEPRECIATION ($M)	7 2	7 2	7 2	7 2	7 2	7 2	7 2	7 2	7 2	7 2	7 2	7 2	7 2	7 2	7 2	7 2	7 2	7 2	7 2	7 2	7 2
PRETAX PROFITS ($M)	19 8	20 2	20 6	21 0	21 4	21 8	22 2	22 6	23 0	23 4	23 8	24 2	24 6	25 0	25 4	25 8	26 2	26 6	27 0	27 4	27 8
(8) TAXES ($M)	5 0	5 1	5 2	5 3	5 4	5 5	5 6	5 7	5 8	5 9	6 0	6 1	6 2	6 3	6 4	6 5	6 6	6 7	6 8	6 9	7 0
AFTER TAX PROFITS ($M)	14 9	15 2	15 5	15 8	16 1	16 4	16 7	17 0	17 3	17 6	17 9	18 2	18 5	18 8	19 1	19 4	19 7	20 0	20 3	20 6	20 9
DEBT SERVICE COVERAGE RATIO = ((1)-(6))/(7)	1 9	2 0	2 0	2 1	2 1	2 2	2 2	2 3	2 3	2 4	2 5	2 5	2 6	2 7	2 8	2 9	3 0	3 1	3 2	3 3	3 4
PROJECT CASH FLOW = (1)-(2)-(3)-(4)-(6)-(8)	30 3	30 2	30 1	30 0	29 9	29 8	29 7	29 6	29 5	29 4	29 3	29 2	29 1	29 0	28 9	28 8	28 7	28 6	28 5	28 4	28 3

Table B.2 - 40

Sensitivity Cases

Financial Analysis

Parameter	Value	FIRR (%)	DSC	Table
Base Case - Tariff = $0 03/kWhr - Capital Cost = $237 5 MM - Gas Price = $8 81/Gcal	-	10 4	1 6 - 3 1	B 2-31
Tariff	$0 0250 /kWhr	5 9	0 9 - 1 8	B 2-32
	$0 0275 /kWhr	8 3	1 2 - 2 4	B 2-33
	$0 0325 /kWhr	12 5	1 9 - 3 8	B 2-34
	$0 0350 /kWhr	14 4	2 2 - 4 4	B 2-35
Total Capital Cost	+10%	9 5	1 4 - 2 8	B 2-36
	-10%	11 5	1 7 - 3 4	B 2-37
Gas Price	+10%	9 1	1 4 - 2 7	B 2-38
	-10%	11 7	1 8 - 3 5	B 2-39

YEREVAN GAS TURBINE COMBINED CYCLE POWER STATION

YEREVAN, ARMENIA

SECTION C
ENGINEERING PROCUREMENT, CONSTRUCTION AND COMMISSIONING
BID PACKAGE

VOLUME III

Burns and Roe Enterprises, Inc
Oradell, New Jersey, USA

207

ENGINEERING PROCUREMENT, CONSTRUCTION AND COMMISSIONING BID PACKAGE

TABLE OF CONTENTS
SUBTASK C
SECTION C 1

1 0 General Information
2 0 Project Management and Project Control Requirements
3 0 Site Data and Site Requirements
4 0 Environmental Requirements
5 0 Operational Requirements
6 0 Quality Assurance/Quality Control
7 0 Project Description
8 0 Mechanical Technical Requirements
9 0 Electrical Technical Requirements
10 0 Instrumentation and Controls Technical Requirements
11 0 Civil/Structural/Architectural Technical Requirements
12 0 Electrical Materials Installation
13 0 Construction
14 0 Scheduling and Progress Reporting
15 0 Commissioning and Training
16 0 Performance Testing Requirements

SECTION 1 0

GENERAL INFORMATION

Section	Title	Page
1 1	Project Description	C1-1
1 2	Work to be Provided Under This Contract	C1-2
1 3	Work by Employer and/or by Others	C1-6
1 4	Technical Specification Documents	C1-7
1 5	Contractor Supplied Equipment and Materials	C1-7
1 6	Engineering Services	C1-9
1 7	Plant Manual Requirements	C1-9
1 8	Plant Life Requirements	C1-11
1 9	Codes and Standards	C1-11
1 10	Units of Measure	C1-11

SECTION 1 0 - GENERAL INFORMATION

1 1 Project Description

1 1 1 General

(Later), hereinafter referred to as the "Owner " (or alternatively "Employer"), intends to install a gas fired base-loaded combined cycle power plant at the existing Yerevan CHP plant station On site are presently two 150 MW natural gas and oil (mazut) fired boiler units and a number of 50 MW power plant units scheduled for decommissioning and/or subsequent demolition The location of the power plant facility is as shown on BRE Drawing C-100, Vicinity Site Plan There shall be minimal interfacing to the existing CHP plant

The new combined cycle installation will occupy approximately 1 63 hectare on the existing plant site The site is accessible by rail and highway The highway connection is to Port of Poti on the Black Sea, in the Republic of Georgia which is approximately 200 km away from the site

The Project Concept described herein is for a nominal 400 MW combined cycle power plant, in a dual train The plant is to consist of two (2) combustion turbines, two (2) unfired triple pressure heat recovery steam generators, one (1) steam turbine and one (1) surface condenser, three (3) generators, three (3) step up transformers, two (2) auxiliary transformers and associated balance of plant systems

Plant arrangement shall be optimized by Contractor The technical specifications attached hereto provide the definition of the systems and facilities which constitute the combined cycle power plant including demolition and/or refurbishment of existing facilities/equipment

The combined cycle power plant is depicted on Site Plan Drawing C-102 and General Arrangement Power Block Drawings M-201 and M-202

Project completion date for commercial operation shall be approximately 30 months after notice of Award of Contract

1 1 2 Fuel

Primary fuel for the combustion turbine will be natural gas The back-up fuel for the combustion turbine will be distillate (#2 fuel oil)

1 2 Work to be Provided Under This Contract

The Contract shall consist of designing, furnishing, constructing, installing, checking out of systems, starting up and testing of a complete operable combined cycle power plant This Contract shall include, but is not limited to, the following work items

1 2 1 The Work shall include furnishing a complete power plant including design, equipment, materials, transportation, erection, construction, and services as specified herein Whenever in these specifications the terms "provide," "furnish," "supply," "furnish and/or install," etc , are used, it is intended that the Contractor shall install the equipment and systems unless specific notation is made that the equipment, device, or system is to be installed by others Contractor shall be responsible for the care, custody and control for all materials delivered to the jobsite, no matter from which source, and including freight forwarding and customs clearance

1 2 2 The power plant unit system shall include all Work in place from initial site construction to start-up and testing as required for a complete operable unit, including electrical power for construction activities

1 2 3 The Work shall include Contractor's and Contractor's Vendors services of technical direction as required for placing the power plant into successful operation, and for training Employer's plant personnel in operation and maintenance of the power plant

1 2 4 Contractor shall coordinate checkout, start-up and perform initial operation of plant equipment and systems in coordination with Employer's plant operation staff Employer's plant operating staff will be supervised by Contractor Contractor shall work with Employer to develop a plan for smooth transition from construction and start-up to operation of the plant

1 2 5 The power plant shall be complete with all components specified herein, and Work as required by Bid Documents, including, but not limited to, preparation of the following design documents asterisk (*) denotes submittal to Employer for approval All other documents/drawings shall be submitted to Employer at time of issue

*(1) Design Criteria Document for Systems and Facilities
*(2) Mass and Energy Balance and Water Balance
*(3) Site Plan
*(4) Power Block and Facility General Arrangement Drawings, Building Drawings
*(5) System P&ID's
*(6) Overall Plant Control Block Diagram
*(7) Major Equipment and Bid Specifications
- Combustion Turbine Generator
- Steam Turbine Generator
- Heat Recovery Steam Generator (HRSG)
- Condenser

- Boiler Feed Pumps, Circulating Water Pumps, Condensate Pumps
- Fuel Gas Booster Compressor
- Repair and Upgrade of Existing Cooling Tower Equipment
- Generator
- Large Transformers (Step-Up, Auxiliary)
- MV Metal Clad Switchgear and Motor Control Centers
- DCS

(8) Electrical Single Line Diagrams
(9) Final Procurement Specifications
(10) Design Studies and Evaluations
(11) Detail Design Drawings
(12) Logic Diagrams
(13) Schematic Diagrams
(14) Wiring Diagrams
(15) System Descriptions
(16) Operation Manuals
(17) Preventive Maintenance Manuals
(18) Equipment Instruction Books
(19) Installation Manuals
(20) As Built Drawings

1 2 6 The Work shall include the following services

(a) Project management, including project administration, scheduling, cost control, and quality assurance

(b) Engineering services, including, but not limited to, the following

1 Detailed design of the following
- Civil and Structural Systems
- Architectural Systems
- Mechanical Systems
- Chemical Systems
- Electrical Systems
- Control and Instrumentation Systems
- Switchyard Systems
- Fault and Load Flow Study for Electrical Systems

2 Complete all design documentation, Construction Drawings, Erection Manuals, Operation & Maintenance Manuals, Start-up and Commissioning Procedure
3 Resident engineering
4 Startup supervision
5 "Conformed to Construction Records" drawings and documents
6 Participation in meetings
7 Performance Testing

(c) Procurement, including expediting and quality inspection, for all equipment, materials, services, and erection of equipment and facilities for a complete and operational combined cycle power plant facility including, but not limited to, the following

1 Combustion turbines/steam turbine, generator and auxiliaries, surface condenser
2 Heat recovery steam generators (HRSG) stacks and auxiliaries
3 CT/ST/Generator/building enclosure including structural steel, siding, roofing, windows, doors, louvers, crane and hoists
4 Fuel Supply Systems (gas fuel and distillate)
5 Fuel Gas tie-in to existing pipeline
6 Sodium Hypochlorite System
7 Mixed Bed Demineralizer
8 Neutralization System (and Waste Water disposal)
9 Fire Detection and Protection System (tie-in to existing facilities)
10 Hydrogen Supply (tie-in to existing facilities)
11 Water Storage Tanks (Condensate Storage Tank and Service Water Storage Tank) (tie-in to existing facilities)
12 Cathodic Protection System
13 Circulating Water System (tie-in and rehabilitate existing system and replace pumps)
14 Ventilation and air conditioning
15 Site and building lighting
16 Yard utility trenches/covers
17 Roads within new power plant
18 Site drainage/Site sanitary (tie-in to existing facilities)
19 Piling and foundations
20 Temporary construction facilities
21 Plumbing (toilets and showers) potable water facilities (tie-in to existing facilities)
22 Piping
23 Fuel Gas Compressors
24 DCS and auxiliaries
25 Electrical equipment and materials
26 Control and Instrumentation equipment and materials
27 Switchyard (extend existing facility)
28 Architectural materials
29 Finish painting of equipment and materials
30 Sodium Hypochlorite building including structural steel, masonry block walls, roofing, doors and louvers
31 Refurbishment of existing fuel oil tanks and new auxiliaries
32 Water Treatment Building including structural steel, masonry block walls, roofing, doors and louvers
33 Relocation of existing underground/aboveground services which are run to the existing CHP plant
34 Demolition of existing site area (Refer to Drawing C-101 for location)

35 Instrument Air and Plant Air (tie-in to existing facilities)

(d) Construction services and startup/commissioning, including, but not limited to, the following

1 Construction management
2 Scheduling
3 Construction labor, supervision, and tools
4 Construction equipment
5 Safety and loss control program
6 Quality assurance program
7 Procurement expediting
8 Manufacturer's field service
9 Equipment and materials receiving (including custom clearance), handling and storage
10 Preoperational checkout, testing, and startup
11 Performance testing
12 Construction closeout and site finishing
13 Construction of storage area
14 First aid and security during construction
15 Participate in coordination conferences and other meetings as the Employer may request

(e) Consumables for startup, testing, and three months of initial operation, excluding make-up water, fuel oil, and fuel gas, but including chemicals required by all water systems

(f) Lubrication oil for system oil flushing and initial fill-up

(g) Training of the Employer's operation and maintenance personnel with durations as stated in Section 14 0 Contractor must employ the services of a translator since training is to be conducted in the Russian language

(h) Coordinating startup and initial operation of plant equipment and systems with the Employer and Employer's Consultant

(i) Developing detailed testing procedures and schedule

(j) Construction power, water, fire protection, lighting, compressed air, telephone, and sanitary facilities (It is expected that Contractor will buy power from the utility and provide a construction power transformer)

(k) All required tools and test equipment

(l) Commissioning and startup spare parts

(m) Priced Spare Parts List for 2 years operation (not included in Contractor's price)

(n) Technical Support for Owner's Permitting activities

1 2 7 Furnishing of all office, kitchen and laboratory furniture equipment, including desks, chairs, fax machines, copy machines, VCR/TV for training, refrigerator, microwave oven, etc

1 2 8 Furnishing of a pick-up truck, 1500 kg minimum capacity

1 2 9 Provide facilities (trailer) for training of Employer's personnel

1 2 10 Obtaining and securing all required local, state, and government permits (construction permits, etc) for constructing the new power plant

1 3 <u>Work by Owner and/or by Others</u>

The following work associated with the plant will be provided by Owner and/or Owner's Consultant

1 Fuel gas, fuel oil and make-up well water for use during start-up and acceptance testing

2 Environmental Impact Assessment (EIA)

3 All necessary environmental permits for construction and operation of the plant (Contractor shall provide all necessary information regarding the plant equipment and services in his supply to assist Employer and/or others in obtaining required environmental permits)

4 Topography mapping/surveying

5 Site Geotechnical Investigation/Borings/Foundation Design Recommendations

6 Providing operators and maintenance personnel for site-specific hands-on training by Contractor and for Plant startup, initial operation, and performance testing under Contractor's technical direction in accordance with mutually agreeable schedule of activities, taking into account the other obligations of such personnel

7 Electric power after backfeed for start-up and commissioning from 110 kV transmission line

1 4 Technical Specification Documents

The Technical Requirements establish the baseline for the combined cycle power plant and shall be followed in the Contractor's design of systems and equipment

Technical Bid Data Forms request information to be supplied by the Contractor during the Bid Phase The supplied data will be used to evaluate the Contractor's bid Incomplete data submittal may be cause for bid rejection Upon award, and upon Contractor/Employer agreement, the submitted data will become a part of the Contract Documents

Conceptual plot plan and general arrangement drawings identified as Drawings C-102 and M-201 have been provided to show the conceptual layout of the combined cycle power plant within the layout of the existing power plant These drawings are provided for information only Contractor may use other layouts, as deemed appropriate, in the optimization of the plant layout

1 5 Contractor-Supplied Equipment and Materials

1 5 1 General

All materials and equipment shall be the latest proven design, new and the first quality standard product of manufacturers or fabricators regularly engaged in the production of such materials and equipment

When two or more units of the same class of equipment are required, they shall be the products of a single manufacturer

1 5 2 Arrangement

Orientation of equipment shall be as required to minimize objectionable noise, and to produce the most suitable access for maintenance and operations

Arrangement of accessories and appurtenances shall be coordinated with facilities as required to provide an optimum layout and economical site use

1 5 3 Product Substitutions

Throughout the Contract Documents, products may have been or will be, specified by reference standards, manufacturers, trade names, catalog numbers, and other like definitions Substitution for those may be made when the Contract Documents allow the option of selecting equivalent products by stating "or equal" or "or approved equal" following the identification of the product according to the above, and providing the substitution is approved by Employer

1 5 4 Factory Tests and Reports

The Contractor shall arrange for the performance for all the manufacturer's standard factory tests

The Contractor shall perform all factory tests required by the applicable codes and by these specifications All rotating machinery shall be statically and dynamically balanced

Employer and/or Employer's Consultant will witness, as a minimum, factory testing of the following equipment

Steam Turbine
Combustion Turbine
Generators
Step Up Transformers
DCS
Protective Relay Panels
Boiler Feed Pumps
Fuel Gas Compressors
Circulating Water Pumps
Generator Circuit Breakers

1 5 5 Manufacture and Assembly

The Contractor shall protect all mill finishes of iron and steel materials and equipment by a primer paint coating in accordance with appropriate industry standard

The Contractor shall ship equipment as completely assembled as possible, consistent with shipping facilities and construction requirements at the plant site Extensive match marking is to be utilized as necessary

The Contractor shall factory pipe and tube all panel devices to bulkhead fittings ready for external connection

The Contractor shall factory fabricate and completely assemble electrical control panels at the Contractor's manufacturing location

The Contractor shall not disconnect factory wiring or tubing except where required to correct errors

For skid-mounted equipment the Contractor shall supply completely assembled units with wire, tube, pipe, paint, and test at the factory

1 6 Engineering Services

The Contractor shall provide for the detail design engineering and construction liaison services for the Project The Engineer/Constructor proposed by the Contractor shall have experience in the design and construction of similar power plant units and shall meet the following experience and qualifications criteria

- Must have detail design engineering experience for at least three combined cycle power plant units of a minimum of 250 MW size over the past five years

- Must have constructed one or more combined cycle power plant units of 250 MW size or larger which have been in successful operation for one or more years Historical operating and availability records shall be provided

1 7 Plant Manual Requirements

Contractor shall furnish detailed reference manuals and documentation for the equipment and plant furnished under this specification All manuals shall have numbered loose leaf pages with Section dividers Fifteen (15) manuals shall be provided Thirteen sets of manuals shall be printed in Russian language, two sets in English

1 7 1 Instruction manuals, including installation procedures, shall be prepared by the Contractor for all equipment The manuals shall include the following

a Data sheets showing model numbers and serial numbers of equipment and additional data as required to identify applicable portions of standard sections of the instruction books

b Instructions for installation, start-up, operation, inspection, and maintenance

c Diagrams of any circuit board cards used in equipment

d Parts lists and recommended spare parts

e Address of nearest manufacturer-authorized service facility

f Data in the instruction book shall include

1 Equipment data
2 Equipment flow diagrams
3 Piping and instrument diagrams
4 Electrical schematics and control diagrams
5 Equipment trip and logic diagrams
6 Equipment lists

7 Installation manuals shall include the information concerning shipment, storage, unpacking, installation, check-out and start-up which is required to monitor the installation to insure that the equipment is installed properly

1 7 2 Operations Manuals shall be prepared by the Contractor which include detailed operating procedures for all plant systems and equipment furnished by the Contractor The Operations Manuals generally shall include the following within the procedures

a Detailed operating instructions for start-up, shut-down, normal operation, and emergency shut-down

b Operator alarm responses for all annunciator alarms

c Piping and instrument diagrams which provide proper valve alignment for equipment for normal operation

d Composite drawings or color reproductions of computer CRT graphic displays showing type of control board or computer-accessed and displayed operating stations for valves and major equipment

e Normal process operating ranges and set points for all plant equipment

f The Operations Manual shall be written utilizing the following format

I <u>Purpose</u> - Shall set forth a brief summary of the purpose of each plant system or procedure

II <u>Prerequisites</u> - Shall address items such as valve line-up, electrical power, controls, fuel, and other equipment or systems required

III <u>Precautions</u> - Shall enumerate significant items which must be acknowledged in order to protect personnel and equipment

IV <u>Procedure -</u>

A <u>Systems and Equipment</u> - Shall include detailed operating instructions for start-up, shut-down, normal operation, and emergency shut-down

B <u>Integrated Procedures and Check Lists</u> - Shall include plant-wide higher level integrated procedures and check lists as follows

1 Combustion turbine/steam turbine inspection check list
2 Unit start-up procedure and sequence
3 Unit cold start and hot start procedures
4 Generator synchronizing procedure

5 Protective relays setting
6 LV Load Centers circuit breakers setting

Operation Manuals shall be written in Russian

1 7 3 A Preventive Maintenance Manual shall be provided by the Contractor which delineates preventive maintenance of significant items of plant equipment and related matters The Preventive Maintenance Manual shall be a compilation of and a cross-reference to information contained in equipment manufacturer and vendor instruction manuals The general intent of the Preventive Maintenance Manual shall be to develop a foundation and data base which will permit implementing a personal computer-based plant-wide Maintenance Management System after commercial operation

1 8 Plant Life Requirements

The plant shall be designed for a minimum service life of 25 years

1 9 Codes and Standards

The Codes and Standards specified within the technical sections herein are U S Codes and Standards Equivalent Japanese and Western European Codes and Standards will be accepted provided that Contractor certifies in the proposal that the proposed alternative codes and standards meet or exceed requirements of the US codes and standards Performance testing, however, shall be to ASME test codes without exception

The latest revision of applicable Codes and Standards stated herein are those in existence at time of bid due date

1 10 Units of Measure

SI units are to be used in describing the parameters for the plant and equipment Pressure shall be stated in Pascals and thermal energy shall be stated in Joules

SECTION 2 0

PROJECT MANAGEMENT AND PROJECT CONTROL REQUIREMENTS

Section	Title	Page
2 1	Project Management	C2-1
2 2	Project Control	C2-3

SECTION 2 0 - PROJECT MANAGEMENT AND PROJECT CONTROL REQUIREMENTS

2 1 Project Management

The Employer's Project Team

The Employer will establish a project team for this combined cycle power plant project headed up by a Project Manager All communication from the Contractor to Employer shall be directed to the Project Manager The Employer project team will have the responsibility to ensure that contractual commitments are satisfied To this end the Contractor will be required to provide unrestricted access for Employer project team members to review all documentation, inspect all equipment under manufacture, shipment or construction and attend any discussions relevant to the Project

Where discrepancies in any of the above are identified contrary to Contract documents, these will be raised directly with the Contractor's representatives If satisfactory resolution is not achieved and dispute resolution is required for the purpose of good faith negotiations, all communications shall be directed to the Employer's Project Manager

Should resolution result in a change to the content of the Contract documents, then the Employer's change order form must be completed and signed by project managers for both parties to record the agreement

Under no circumstances shall the Contractor be allowed to vary the plant from that detailed in the Contract documents without Employer's prior approval

For the design phase of the project the Employer will assign a number of project team members to review all design documentation, plant selection and purchase, quality assurance procedures and contract administration for the project

For the construction and commissioning phase of the project, Employer will assign a number of project team members to the Site to review all Site and construction matters for the project

Contractor's Project Manager

The Contractor shall appoint a single Project Manager to assume total responsibility for all aspects of the project for the Contractor up to Contract Closeout He shall attend as a minimum, monthly visits at the project site for progress meetings with Employer's Project Manager

Contractor's Project Team

The Contractor shall appoint a specific project team to manage and control all project activities

The structure, location and working arrangements identified for the Contractor's project team shall be documented to illustrate clearly the working relationships between individual members and also relationships with external parties included in the project The relationship with Employer project team members shall be identified in this document

Project Engineering

The Contractor shall be responsible for the completion of engineering design, production of documentation, drawings and specifications, determination of all plant selection and placement of purchase orders in a timely and effective manner to satisfy the specific Project design requirements The Contractor's project team will be responsible for the development of an overall plan to organize and progress the engineering function

The Contractor shall comply with the agreed and documented requirements within the Contract Documents to ensure that all design and plant selection actions are acceptable

Project Contract Administration

The Contractor shall be responsible for the satisfactory completion of contract administration activities and for the development of an overall plan to organize and conduct the contract administration function

Project Construction

The Contractor shall be responsible for the successful completion of all construction, commissioning and testing requirements The Contractor's project team shall include a complete, self-contained Site organization with sufficient resources and experience to satisfy all construction requirements

A construction manager shall be appointed to lead the Site-based team and accept responsibility for all Site related matters

2 2 Project Control

The Contractor shall be responsible for the development and implementation of an effective system to control all project activities and report on project performance including cost, time schedule and the production of documentation

The Contractor shall utilize a computer based CPM system for project control purposes The system to be used must be capable of producing customized reports and information on demand This control system shall have been successfully applied to similar projects and be familiar to the project control personnel selected

Information and documentation submitted to Employer shall be in the same form as required by the Contractor No special provisions shall be undertaken for preparation of documentation for Employer use By this means, issue of the documentation required by Employer shall not place undue demands on the Contractor and Employer's project manager shall be confident of the accuracy of reported progress as the Contractor's project manager will be using the same information for control purposes

Documentation Identification

The Contractor's detailed project documentation plan shall identify all documentation requirements for the project, the party responsible for production of the document, the basic content of the document and the required timing for issue This plan shall include, but not be limited to, the details of all drawings to be produced, plant specification/definition documentation, equipment orders, manuals, etc

The documentation identified shall be entered into the computer based control system The database thus created shall be capable of being sorted and ordered on a variety of selected parameters such as document type, subject description, responsible party, start date, finish date, etc , to enable review and update to be conducted only on those documents which are relevant

Documentation Progress Reporting

Regular documentation control progress reports shall be prepared by the Contractor to record the status of documentation

These reports shall be prepared and issued to Employer on a monthly basis

Six (6) copies of the documentation control progress report shall be provided to Employer's project manager In addition to this regular report, the Contractor shall provide other reports on request by Employer's project manager

Documentation Progress Review

In the event of Employer's project team members expressing concern with the content of documentation control progress reports, the accuracy of progress reports, status of documentation production and other such matters, Employer's project manager will identify this concern to the Contractor's project manager Within three (3) Working Days of notification of this concern, the Contractor's project manager (or his nominated representative) shall communicate with relevant Employer project team representatives and provide details of specific actions to be initiated to satisfactorily overcome the difficulties identified

It will be the Contractor's project manager's responsibility to initiate whatever action is necessary to ensure that the production of documentation is completely in accordance with the project documentation plan and overall project requirements

Time Schedule Identification (Project Schedule)

The Contractor's detailed time-based project management program shall identify all activities, and their interdependencies, required for the successful completion of the project Each activity shall be part of a work breakdown structure and be coded to enable separate reporting as either an engineering, purchasing/manufacturing, construction or commissioning function Allocation of resources required shall also be provided for each activity to enable resource planning to be taken into consideration, with identification of the critical path activities for the project

This program shall be entered into the Contractor's computer based control system and shall form the control time schedule for the project From this control time schedule the critical path activities shall be identified The time schedule shall include the Milestone Dates

The Contractor's project manager shall ensure that all Employer's interfaces are specifically identified in the program activities and that sufficient time is allocated for these interfaces

Time Schedule Progress Reporting

Regular time schedule control progress reports shall be prepared to record the status on all activities These shall be the Contractor's standard progress reports applicable for both over-view and detailed reporting levels The coding of activities will enable separate reports to be issued on an engineering, purchasing/manufacturing, construction

and commissioning basis, as well as on contract or systems grouping Additional breakdown capability should be provided for further detail as required

Specific "exception reports" shall be generated identifying those activities which were scheduled to start but have not, activities which are scheduled to be completed and are not or activities which are not progressing as effectively as required The exception reports are essential to quickly identify areas for corrective action and shall be available to Employer on request

The progress and exception reports shall be prepared and issued on a monthly basis Three (3) copies of the reports shall be provided to Employer's project manager

Time Schedule Progress Review

In the event of Employer's project team members becoming concerned with the actual progress not aligning with the progress planned, Employer's project manager will identify this concern to the Contractor's project manager Within three (3) Working Days of notification of this concern, the Contractor's project manager (or his nominated representative) shall communicate with relevant Employer project team representatives and provide details of specific actions to be initiated to satisfactorily overcome the difficulties identified

It will be the Contractor's project manager's responsibility to initiate whatever action is necessary to ensure that the rate of progress achieved is completely in accordance with the project control time schedule and overall project requirements

Value Engineering

From time to time, the Contractor may determine that certain designs or construction procedures can be adapted so as to reduce costs and/or improve Schedule without compromising work quality If this can be demonstrated, upon application to the Owner, the Contractor shall be entitled to a portion of such savings for his account as compensation

SECTION 3 0

SITE DATA AND SITE REQUIREMENTS

Section	Title	Page
3 1	General	C3-1
3 2	Topography	C3-1
3 3	Climatic and Site Conditions	C3-1
3 4	Seismic Requirements	C3-2
3 5	Water Source	C3-2
3 6	Site Environment	C3-3
3 7	Site Security	C3-4
3 8	Site Access	C3-4

SECTION 3 0 - SITE DATA AND SITE REQUIREMENTS

3 1 General

The proposed plant will be located within the existing Yerevan CHP plant in areas as shown on the Site Plan Drawing C-101 The water table is approximately [Later] m below the existing surface

3 2 Topography

The plant will be located on a presently level area within the existing plant A soils boring plan, survey and geotechnical investigation survey will be performed by the Contractor

3 3 Climatic and Site Conditions

Site Elevation	945 m ASL
Average Ambient Temperature Range	Summer 30°C Winter 6°C
Average Relative Humidity	68%

Ambient Air Conditions (monthly averages)

	Dry Bulb °C	RH%, morning
January	(-) 2	87
February	0	86
March	6	80
April	12	75
May	17	75
June	22	71
July	26	66
August	25	66
September	21	70
October	13	81
November	6	86
December	0	87

Cooling Water

Source Cooling Tower

Design Cooling Water temperature	31°C

Meteorology

Annual Rainfall	450 mm
Annual Snowfall	Winter, heavy snows
Wind Speed and Prevailing Direction	[Later]
Seismic Zone	See section 3 4
Special Conditions	Hydrocarbons are present in the atmosphere, in addition atmosphere is dusty

3 4 Seismic Requirements

Yerevan is located in seismic zone 9 corresponding to a peak ground acceleration (PGA)=0 4g, where g is the acceleration due to gravity This factor has to be further corrected based on the dynamic properties of the foundation soils In addition, structures, systems and components located at upper floor elevations may be subjected to amplification due to flexibility of the structure Therefore, the structures, systems and components located at grade, or higher, may be subjected to design accelerations in excess of 0 4g

The above information is being provided for information only Contractor shall determine the applicable Federal, State and Local requirements, and perform the design accordingly

The Contractor shall determine the applicable seismic design motion, perform a soil-structure interaction analysis, and, determine the design response spectrum at grade and the various floor elevations

3 5 Water Source

The project utilizes a circulating cooling water system using cooling towers Make-up water requirements are primarily for boiler blow-down, steam condenser heat rejection, demineralizer make-up, potable water and service water

3 5 1 Makeup water for the cooling tower system is sourced from a river pump house through existing supply mains River water analysis is as follows, based upon 1997 data

Temperature °C	19 Summer	14 Winter
pH	7 3	
Alkalinity, meq/l	4 5	
Hardness meq/l	10 2	
Chlorides, mg/l	150	
Sulfates, mg/l	385	
Carbonates, mg/l	8 8	
TDS, mg/l	1100	
Oxygen, mg/l	0 4-0 6	

3 5 2 Makeup water for plant services, demineralizer makeup, etc , is sourced from an existing twelve artesian well system through existing supply mains Analysis is as follows, based upon 1997 data

Temperature °C	32 Summer	22 Winter
pH		6 9
Alkalinity, meq/l		42 9
Hardness meq/l		4 0
Chlorides, mg/l		48
Sulfates, mg/l		60
Salt, mg/l		410
Oxygen, mg/l		0 24
System capacity		2000 l/sec

3 6 <u>Site Environment</u>

Contractor shall be responsible for protecting and maintaining the site which shall include but not be limited to the following

a Proper storage and disposal of all waste and contaminants such as spent boiler pickling liquors, debris, paints, solvents, lubricants, oils, etc will be required at all times No waste or contaminants shall be disposed of on-site Records of all disposals shall be retained and provided to the Employer at the end of the project

b Disposal of hazardous waste will require Employer's approval of the disposer and method of disposal, prior to disposal of hazardous waste The Contractor will ensure that no hazardous materials are brought onto the Employer's property

c Contractor shall maintain the project site in a neat and clean condition Materials shall be protected from damage due to dirt, debris or the elements

Upon completion all temporary buildings, rubbish, unused materials, and other equipment and materials belonging to and used in the performance of the work shall be disposed of During construction, stormwater and fugitive dust emissions shall be controlled by use of proper construction practices or other means

3 7 Site Security

Contractor shall construct a permanent site security fence, 2 meters (6 5 feet) high with two (2) double swing entrance gates and two (2) personnel entrance gates

3 8 Site Access

The plant shall be constructed without obstructing public thoroughfares and the access roads within the existing facility All warning signs shall be posted in Russian and a safe workplace shall be provided and maintained

SECTION 4 0

ENVIRONMENTAL REQUIREMENTS

Section	Title	Page
4 1	Airborne Emissions	C4-1
4 2	Noise Control	C4-1
4 3	Liquid Streams	C4-2
4 4	Solid Waste	C4-2

SECTION 4 0 - ENVIRONMENTAL REQUIREMENTS

4 1 Airborne Emissions

The Contractor shall guarantee that the plant "exhaust emissions" shall not exceed the following

Natural Gas Firing

NOx	25	ppmv
CO	15	ppmv

Distillate Firing

NOx	42	ppmv (with water injection)
SO_2	39 ppmv with 0 2 wt % S and 97 ppmv with 0 5 wt % S	
CO	20 ppmv	
PM_{10}	4 8 ms/MJ	

The above are based on 15% O_2

4 2 Noise Control

The Contractor shall guarantee that the resulting ambient noise level for all equipment (except the combustion turbine and steam turbine) shall not exceed 85 dBA at a distance of one meter from the edge of the equipment The overall noise level for the CT Gas Compressors and ST shall not exceed 90 dBA at a distance of one meter from the edge of the equipment

All measurement of noise and testing shall be done in accordance with ANSI B133 8

The Contractor shall make any modifications necessary, including the installation of additional and/or improved sound attenuation equipment as required to comply with the above stated noise criteria

4 3 Liquid Streams
(Later)

4 4 Solid Waste

(Later)

SECTION 5 0

OPERATIONAL REQUIREMENTS

Section	Title	Page
5 1	Combined Cycle Power Plant	C5-1

225

SECTION 5 0 - OPERATIONAL REQUIREMENTS

5 1 Combined Cycle Power Plant

The combined cycle power plant shall be designed to attain a very high level of availability The plant will essentially operate as a base loaded unit The projected operating hours are at least 7500 hours per year The unit is dispatchable and is expected to normally operate between 75% and 100% of plant load

The plant shall be designed to permit automatic operation control between 25 and 100 percent load

TABLE C5 1

PROJECTED OPERATIONAL SCHEME

Hours in year	=	8760
Operating Hours	=	7500
Capacity Factor	=	85%

In case of load rejection, the power plant shall be capable of sustaining its own auxiliaries independently to keep the power plant availability

The combustion gas turbines shall be capable of at least **(Later)** cold starts per year and **(Later)** warm starts per year Start-up times for each unit shall not exceed the following

- Cold start (72 + hours) - 3 hours
- Warm start (more than 8 less than 48 hours) - 2 hours
- Hot start (less than 8 hours) - 1 hour

Additionally, the main equipment shall be designed to achieve the following startups for a period of 25 years

Cold startups	**(Later)**
Hot startups after a trip	**(Later)**

SECTION 6 0

QUALITY ASSURANCE/QUALITY CONTROL

Section	Title	Page
6 1	General	C6-1
6 2	Organization	C6-1
6 3	Reporting	C6-2
6 4	Procedures Manual	C6-3

SECTION 6 0 - QUALITY ASSURANCE/QUALITY CONTROL

6 1 General

The Contractor shall be responsible for an integrated quality assurance/quality control program including but not limited to design, construction, installation, materials, equipment, checkout, start-up and initial operation International Standards such as ISO-9000 series (ANSI-ASQC Q90 series in the USA) on Quality Management and Quality Assurance provide an acceptable program outline in this area The QA/QC programs of the Contractor and his subcontractors shall be enforced to assure that the plant furnished to Employer is of good quality

A The QA/QC programs of all participants in the plant design, furnish and construct program shall be submitted to Employer Periodic audits of the subcontractor's QA/QC programs shall be conducted by the Contractor's QA/QC group

B Throughout the term of the Contract the Employer may audit elements of the Contractors and his subcontractors QA/QC program to ensure program compliance The Contractor and his subcontractors shall allow Employer access to their facilities, data and personnel

C The Contractor shall establish a project QA/QC group with qualified representatives for quality monitoring in Engineering, Procurement, Fabrication and Construction This QC Group shall be a permanent project group for the duration of the project

6 2 Organization

1 Contractor's QA/QC program shall be developed around an independent group responsible for Quality reporting to Contractor's Project Manager but responsible to the Contractor's Corporate Management

2 The QA/QC program shall have a qualified, group leader (QC Director) with supporting staff as required to meet the requirements set out herein and in the Contractor QA/QC Procedures Manual

3 Employer shall have direct communication with the QA/QC group leader and staff

4 The QA/QC program shall be responsible for seeing that all changes are documented on Drawings Manufacturer's Representatives changes, field

changes, design changes shall be documented and all drawings shall be kept current

6 3 Reporting

6 3 1 Written reports shall be submitted monthly to Employer, Contractor's Project Manager, the Corporate Manager in charge of Quality Programs and to others as mutually agreed upon

6 3 2 The reports shall cover one calendar month and shall be distributed within seven (7) working days following the last day of the month being reported

6 3 3 The monthly report shall be a bound report covering in detail the following topics

Quality checks performed during the month and the results of those checks

Any deviation from the specified and required quality standard shall be prominently noted

Correction of quality deviations noted in previous month(s) reports shall be discussed

Description of Quality checking planned for the coming month

Listing of organizations performing quality testing during the month

Both design and construction quality checking shall be covered

6 3 4 Construction QA and QC reporting shall include consideration of items such as

Insurability of the facility by forestalling construction defects
Planning
Housekeeping during construction
Safety Security
Security
Receiving, storage and handling of equipment and materials
Cleaning of fluid systems
Preconstruction verification
Inspection of earthwork
Inspection of piles and caissons, if appropriate

Inspection and testing of concrete
Inspection of steel construction
Installation of equipment
Inspection of Mechanical/Piping Systems
Process control of welding, brazing, etc
Verification of completed system/subsystems
Preoperational testing of equipment
Process control of electrical installation, cable pulling, termination and marking
Inspection of Grounding
Performance of Electrical Testing
Protection of Installed equipment and systems

Acceptance testing in field shall be same as shop testing acceptance

Contractor shall hire an independent testing agency that specializes in soils compaction testing and concrete testing Independent testing agency shall be approved by Employer

6 4 Procedures Manual

6 4 1 Contractor shall prepare and submit to Employer for approval a complete and comprehensive QA/QC Procedures Manual for the project

6 4 2 The preliminary Procedure Manual shall be submitted after the Notice to Commence Work The Manual shall cover Engineering, Procurement, material storage and Construction QA/QC

6 4 3 Following Employer approval, Contractor shall submit 6 copies of the Procedures Manual to Employer for his use

6 4 4 Contractor shall distribute the Procedure Manual to his project staff and enforce the provisions as they apply to the various members of his organization

6 4 5 The Procedures Manual shall be in a durable 3-ring binder sectionalized to facilitate updating as required A document control procedure shall be enforced to assure that all manuals are accounted for and kept current

SECTION 7 0

PROJECT DESCRIPTION

Section	Title	Page
7 1	Description of Plant	C7-1
7 2	Site Layout and Arrangement	C7-2
7 3	Fuel System	C7-3
7 4	Water Pretreatment System	C7-3
7 5	Makeup Demineralizer System	C7-3
7 6	Sodium Hypochlorite System	C7-4
7 7	Wastewater System	C7-4
7 8	Hydrogen Generation System	C7-4
7 9	Electrical Requirements	C7-4
7 10	Utility Services/Connections	C7-5

SECTION 7 0 - PROJECT DESCRIPTION

7 1 Description of Plant

The Yerevan Gas Turbine Combined Cycle Power Station will be a nominal 400 MW combined cycle power plant with two (2) combustion turbines, one (1) steam turbine and their associated generators, two (2) triple pressure, heat recovery steam generators (HRSG), one (1) surface condenser and miscellaneous ancillary equipment and accessories as specified herein

The cooling water system for the steam turbine surface condenser and for plant auxiliary equipment will be a circulating water cooling system Make-up water to the plant will be well water which will be pretreated and then sent to an on-site service water storage tank

The combustion turbine is to be designed for dual firing with natural gas as the primary fuel and #2 fuel oil as the back-up fuel Gas will be delivered to the site at minimum 0 7 MPa Fuel gas compressors are required to be included in Contractor's scope of work

7 2 Site Layout and Arrangement

The conceptual site layout for the power plant is as shown on BRE Drawings C-101 and M-201

7 3 Fuel System

The combustion turbine shall be designed for dual fuel firing with natural gas as the primary fuel and distillate fuel oil as the backup fuel Gas compressors shall be used to boost the available gas pressure delivered to the site at 0 7 MPa to the correct operating pressure for firing within the combustion turbine A distillate fuel oil system shall be provided consisting of a storage tank, fuel forwarding pumps and associated accessories Two existing storage tanks identified on Drawing C-101 are to be refurbished for use as the #2 fuel oil storage tank These tanks have been previously used to store mazut (heavy fuel oil) Contractor's scope of work is to include cleaning and refurbishment of this system and all appurtenances to make it suitable for storage of #2 fuel oil

7 4 Water Pretreatment System

Makeup water to the plant will come from wells which are located approximately 3 km from the site Contractor's interface point for the makeup water will be located at **(Later)**

The existing water pretreatment system removes iron, manganese, hydrogen sulfide, or other impurities as required to provide water of acceptable quality for the potable water system and service water system Service water will be used as influent to the makeup demineralizer and sodium hypochlorite systems, in the fire protection system, and for miscellaneous service water requirements throughout the facility

7 5 Makeup Demineralizer System

Influent to the existing makeup demineralizer system is pretreated well water from the existing service water storage tank The makeup demineralizer system shall provide water of acceptable quality for makeup to the HRSG An existing tank will be used for dedicated storage for the CCGT plant

Performance of the existing makeup demineralizer system is indicated by the Demineralized Water Analysis as follows

Parameter	Quality
Hardness	1 meq/l
Total alkalinity	50 meq/l
Silica	16 μg/l
Ammonia (range)	600-1500 μg/l
pH	9 5
Chloride	1 μg/l
Iron (range)	3-12 μg/l
Carbonic acid	5-7 μg/l

7 6 Sodium Hypochlorite System

The sodium hypochlorite system shall electrolytically generate sodium hypochlorite from a solution of sodium chloride and pretreated well water The system shall store sodium hypochlorite, inject it into the river water cooling intake for macrofouling control, and inject it into the wastewater outfall for microfouling control Sodium hypochlorite will also be supplied to the potable water system

7 7 Wastewater System

Wastewater from the plant will consist of neutralized regeneration waste from the makeup demineralizer system, waste from the pretreatment system, HRSG blowdown, floor drains from the CT/ST generator building, potentially contaminated yard drains from the transformer area, and sanitary wastewater This will be stored and tested in a new tank

Sanitary wastewater will be treated in a packaged treatment system of the extended aeration type Floor drains from the CT/ST generator building and potentially contaminated yard drains from the transformer area will be treated in oil/water separators, with the clear effluent going to the wastewater storage tank

These and other plant wastewater streams will be blended with the cooling water blowdown and discharged to the river downstream of the pump intake chamber

7 8 Hydrogen Generator and Storage System

The existing CHP plant will provide hydrogen cylinders to the GTCC facility as required

7 9 Electrical Requirements

The electrical systems and associated equipment shall be designed with flexibility and adequate redundancy to provide a reliable source of power for all auxiliaries that will be required for the new combined cycle power plant

The design and installation of the new plant interconnection into Armenergo electrical system at 110 kV will be in accordance with Armenergo requirements for system compatibility

Armenergo's 110 kV Substation at Yerevan Plant consists of an air insulated switchgear housed in a building The bus switching arrangement utilizes double bus bars radially feeding a load or receiving generation via a circuit breaker A tie circuit breaker (bus coupler) is provided between the two buses There are fourteen circuit breakers to accommodate thirteen circuits - five for outgoing transmission lines, three for transformers feeding 35 kV system, one for receiving 150 MW generation, one for feeding the startup transformer of the 150 MW plant, two for receiving generation from old generators 1 and 6, and one for the reserve transformer feeding 3 0 kV switchgear bus The Substation Building is designed to accommodate sixteen bays or circuits Hence, the two new circuits required for addition of the combined cycle unit can be accommodated in this building The generators 1 and 6 are decommissioned and associated bays can also be reused after modifications Drawing E0005 - 110 kV and 35 kV substations Key One Line Diagram, depicts the existing configuration and interconnections to the new combined cycle power plant unit

The new unit will be interconnected with on-site 110 kV Armenergo Substation to deliver/ receive the output/input of the plant The electrical power will be generated by the generator at three phase, 50 Hz, and the manufacturer's standard rated voltage The step-up transformer(s) will be provided to step-up the voltage from the generator's voltage to the grid voltage

Three 110 kV overhead lines will be provided from the new unit to the existing 110 kV substation to transmit generation and receive start-up power

Unit's auxiliary loads will be fed from either the generator output, via the unit auxiliary transformer (UAT), or from the startup source The unit auxiliary transformer and startup/standby transformer will be connected to two medium voltage switchgear buses via independent circuit breakers The power will be distributed in radial configuration to the auxiliary loads from these MV switchgear buses (6 3 kV)

7 10 Utility Services/Connections/Tie-Ins

Utility connection interfaces shall consist primarily of the following

1 Make-up water line (well water) - Contractor's interface point shall be (Later)

2 Cooling water supply line/return line (circulating water) - Contractor's interface point shall be)Later)

3 Wastewater discharge line - Discharge shall be to circulating water discharge canal after treatment

4 Interconnections to existing Armenergo 110 kV Substation (Later)

5 Fuel gas supply line - Contractor's interface point shall be (Later)

6 Instrument/Plant air - Contractor's interface point shall be (Later)

7 Fire water - Contractor's interface point shall be (Later)

8 Liquid Fuel Supply Line - (Later)

9 Nitrogen - (Later)

10 Carbon Dioxide - (Later)

11 Hydrogen - delivered as cylinders from generator in existing CHP plant

12 Steam - Startup steam for turbine gland seals - Contractors interface point shall be from existing CHP header

SECTION 8 0

MECHANICAL TECHNICAL REQUIREMENTS

Section	Title	Page
8 1	General Mechanical Requirements	C8-1
8 2	Codes and Standards	C8-1
8 3	Combustion Turbine and Auxiliary Systems	C8-3
8 4	Generator and Auxiliary Systems	C8-9
8 5	Fuel Gas System	C8-9
8 6	Distillate Fuel Oil System	C8-10
8 7	Heat Recovery System	C8-10
8 8	Boiler Blowdown System	C8-16
8 9	Steam Turbine and Auxiliary Systems	C8-17
8 10	Condensate and Feedwater System	C8-22
8 11	Circulating Water System	C8-25
8 12	Water Treatment System	C8-27
8 13	Closed Cooling Water System	C8-32
8 14	Chemical Injection Systems	C8-33
8 15	Sodium Hypochlorite, Generator, Storage and Distribution System	C8-34
8 16	Hydrogen Generator and Storage System/CO_2 System	C8-35
8 17	Compressed Air System	C8-37
8 18	Wastewater System	C8-38

Section	Title	Page
8 19	Fire Protection System	C8-39
8 20	Heating, Ventilating and Air Conditioning Systems	C8-40
8 21	General Equipment Requirements	C8-43
8 22	Painting	C8-54
8 23	Lubrication	C8-54
8 24	Testing	C8-55
8 25	Turbine Steam By-Pass System	C8-55
8 26	Make-up Water Supply System	C8-55

SECTION 8 0 - MECHANICAL TECHNICAL REQUIREMENTS

8 1 General Mechanical Requirements

This section provides a description of the primary mechanical equipment and systems that shall comprise the Plant, as well as their functions and the criteria upon which their design shall be based Where used herein, and unless specifically noted otherwise, the terms "full-capacity" and "100 percent capacity" shall mean that capacity required to support continuous plant operation at normal maximum power generation, including appropriate margins for wear, surge, and other normal conditions associated with the components or systems to which the terms are applied

The guaranteed net power output and net plant heat rate of the combined cycle power plant shall be based on conversion to site conditions for the following design conditions and measured at the high voltage side of the main step-up transformer

- outdoor ambient temperature, 15°C (59°F) dry bulb, relative humidity, 60%, barometric pressure, 1 01 Bar (14 645 psi)
- 0% blowdown
- 0 9 power factor lagging
- available gas pressure as specified in Table 8-1
- LHV and gas fuel analysis as specified in Table 8-1
- Condenser inlet water temperature -31°C

The conceptual flow diagram for the combined cycle power plant is as shown on M-020 Other suitable arrangements are acceptable subject to review and approval by the Employer and Contractor

The specifications provided herein are intended to reflect a minimum quality level for the mechanical/chemical systems Other type systems/equipment may be proposed, however, they will be subject to Employer's approval

8 2 Codes and Standards

The mechanical systems and equipment described herein shall be designed, fabricated, installed and tested in accordance with the following codes and standards

American National Standards Institute (ANSI)

American Society of Mechanical Engineers (ASME)

American Society for Testing and Materials (ASTM)

American Gear Manufacturers Association (AGMA)

National Fire Protection Association (NFPA)

American Petroleum Institute (API)

American Welding Society (AWS)

American Water Works Association (AWWA)

Manufacturers Standardization Society of the Valve and Fitting Industry (MSS)

Tubular Exchange Manufacturer's Association (TEMA)

Hydraulic Institute Standards (HI)

Heat Exchange Institute (HEI)

8 3 Combustion Turbine and Auxiliary Systems

8 3 1 Combustion Turbine (CT)

Each combustion turbine set shall be furnished complete with all accessories and auxiliary systems required for start-up and generating capability for combined cycle operation The combustion turbine generator shall include fuel firing systems, best available technology for NOx control (DLN), turbine accessories and auxiliary systems The unit shall be located indoors as shown on Drawing M-201 Appropriate component laydown areas shall be provided

The combustion turbine shall be designed to satisfy the performance requirements delineated in Contractor's energy and mass balance diagram during normal operation at a sufficient exhaust pressure for exhaust gas flow to the heat recovery steam generator and ducting for combined cycle power plant operation The combustion turbine documentation shall include guaranteed performance parameters and corresponding site performance correction curves relative to output, fuel use, and emissions

The combustion turbine is to be set up for dual fuel operation with natural gas being the primary fuel and #2 fuel oil being the back-up fuel The fuel changeover shall be automatic on loss of gas pressure Fuel changeover back to gas (primary) fuel is to be manually initiated from the CT control panel Table 8-1 tabulates the fuel gas analysis and Table 8-2, the distillate fuel analysis

The CT shall be shop assembled to the maximum extent possible with internal piping, electrical wiring and cabling The complete combustion turbine assembly shall be mounted on a structural steel frame base or separate base plates that shall be extended to support its accessories and auxiliary equipment

Contractor shall verify that rotating equipment is properly balanced and designed such that critical speeds do not encroach on operating speeds Shop balancing shall be to ISO-1940/1

Contractor shall provide a compressor water wash on line cleaning system and an off line-water wash system This system shall include the necessary pumps, tanks, nozzles and stainless steel piping

Combustion turbine rotating and stationery buckets shall be coated to enhance the resistance to corrosion

Borescope ports shall be provided at various locations in the combustion turbine Stages of the combustion turbine internal components shall have borescope ports or manway access Access shall be provided for the combustors to allow complete inspection of hot section components, including igniter area

Turbine enclosure shall be designed and constructed with sound attenuating, material, if required, to meet the noise limitations specified in Section 4 0 The unit shall be provided with a full flooding, self-contained CO_2 fire protection system The CO_2 system shall be sized for "double shot" protection The basic enclosure structure shall be equipped with access doors, interior lighting and an adequate ventilation system to keep the enclosure interior at proper equipment operating temperatures

Separate systems shall be designed and provided to deliver the specified fuels A purge system shall be provided for distillate manifold piping to flush distillate from the piping and nozzles when not in operation The distillate system shall include fuel forwarding pumps, fuel governing electronic controls, and interconnecting piping

A water injection system shall be furnished for NO_x reduction when operating on No 2 fuel oil The system shall consist of pumping and metering equipment for supplying demineralized water to the combustion chamber for NO_x emission

control with minimum water injection by modulating the water injection rate proportional to fuel consumption Two (2) - 100% capacity NOx water injection pumps shall be provided The combustor shall allow for the addition of atomizing air required for fuel oil combustion and water injection for NO_x control when operating on fuel oil

8 3 2 Turning Gear

An AC motor driven turning gear, DC motor driven ratchet gear or manufacturer's standard shall be furnished for the turbine including oil piping and all associated hangers, valves and necessary interlocks The turning gear motor shall have provisions for manual rotation to engage the turning gear with the main turbine shaft The turning gear shall automatically disengage when the turbine-generator speed rises above the turning gear speed and re-engage on turbine shutdown when the turbine speed slows down to preset speed

8 3 3 Coupling

Couplings shall be of the flexible type and shall have the capability to accommodate the maximize permissible angular and parallel misalignment and end float The couplings shall be sized using a service factor of 1 25 applied to the maximum brake horsepower delivered by the turbine The couplings shall comply with AGMA Standards for bore and keyseat tolerances for interference fit

8 3 4 Combustion Air Intake System

An air intake system shall be provided including a filter system, an intake silencer, and all necessary air inlet ducting

The system provided shall be suitable for conditioning ambient air to the requirements of Contractor's equipment The system shall consist of 3 stages of filtration (1st stage - inertial filter, 2nd stage - pre-filter, 3rd stage - high efficiency filter) The filter shall be provided with pressure loss sensors and indicating instrument devices, with scale reading in mm (inches) water gauge Compressed air for cleaning shall be taken from either compressed air system or independent compressed air system maintaining the same air conditions as that for instrument air Filter fabric shall be non-combustible

The vendor shall guarantee the noise attenuation level of the intake silencer

Table C8-1

FUEL DATA - COMBUSTION TURBINE

Fuel	Natural Gas
Average Heating Value (LHV)	Design 33,700 kJ/nm^3
Chemical Analysis, % by Volume	
Methane (CH_4)	91 93
C_2	3 85
C_3	1 45
C_4^+	0 78
C_s^+	0 78
O_2	0 12
N_2	0 03
CO_2	0 15
H_2S	nil
H_2O	[Later]
Specific Gravity at 60°F	[Later]
Delivered Temperature	ambient
Delivered Pressure	7 kg/cm^2(g) minimum (700 kPa)

Table C8-2
FUEL DATA - COMBUSTION TURBINE

Fuel	#2 Diesel Fuel Oil
Heating Value (LHV)	42,600 kJ/kg
Specific Weight @ 20°C	860 Kg/m^3
Viscosity (kinematic) @ 20°C	3-5 cSt, range
Elemental Analysis, % by weight	
Sulfur (max)	0 2-0 5, range
Ash	0 01
Fuel Bound Nitrogen	0 015*
Water	Nil
Carbon	85 5
Nitrogen	0 1
Hydrogen	13 0
Oxygen	0 5

* Assumed

8 3 4 Starting System

A starting system shall be provided complete with automatic controls, to permit startup locally and from a remote location Sequencing logic and equipment shall be provided that shall be capable of safely bringing the turbine up to self-sustaining speed

8 3 5 Lubricating Oil and Cooling System

A self-contained pressure lubricating oil and control oil system shall be provided to supply oil for each combustion turbine to all bearings, gear boxes, and continuously lubricated couplings Two (2) - 100% capacity AC lubrication oil pumps and one (1) DC lubrication oil pump shall be provided The oil system shall have the capability of having oil added during operation of the turbine Two (2) 100% capacity AC motor driven vapor extractors and oil mist eliminators shall be provided

Contractor shall supply a stainless steel oil reservoir and two (2) - 100% capacity full-flow heat exchangers The oil reservoir shall have sufficient capacity to support the required retention time of at least 5 minutes based on the normal flow through the tank and shall be provided with fill and vent connections An automatic temperature control system shall be provided to control oil temperature leaving the heat exchanger

A duplex full-flow filter shall be provided on the suction side of each lube oil pump that shall be of the replaceable cartridge type The filter design shall incorporate the changeover valve

Clean and dirty lube oil storage tanks with local sight level gauges shall be provided for the lube oil system Each tank shall have a capacity of 110% of lube oil reservoir

The lubricating oil system shall be equipped with a cooling system that provides satisfactory lube oil cooling at the ambient extreme temperatures experienced at the site Temperature regulation of the oil shall be provided with controlled cooler bypass

The following system accessories shall be provided

Pressure switches to indicate oil pump status

Solenoid-operated oil valves

Float operated level indicator with alarm switch

Local or remote testing of high and low oil level alarm

Integral guarded oil piping system

Lubricating oil conditioner (purifier) and sight overflow

8 3 6 Exhaust Gas System

The exhaust gas system shall consist of an expansion joint and transition duct, directing the exhaust gas directly to the inlet of the heat recovery steam generator

8 4 Generator and Electrical Auxiliary Systems

Refer to Section 9 0

8 5 Fuel Gas System

The existing pipeline comes from the Abovian underground storage facility Total length of the pipeline is about 50 km A 2 MPa pipeline goes from the Abovian underground gas storage to the Reduction Station located about 3 km outside the Yerevan TPP A 700 kPa pipeline (designed for max pressure of 1 8 kPa) continues to Yerevan TPP Pipeline is capable of providing 160,0000 m^3/hr in normal operating mode and 240,000 m^3/hr maximum Pipeline diameter is 720 mm

Contractor shall provide a metering station with relief valve and flow integrating meter/calorimeter upstream of the fuel gas compressors The metering station shall be approved by the fuel gas supplier All piping is to be above grade

Contractor shall provide two (2) - 100% capacity gas compressors each sized to increase the incoming gas pressure from 700 kPa to the required operating pressure of the combustion turbine If a reciprocating type compressor is used, then inlet and outlet pulsation bottles (accumulators) shall be provided Bypass capacity control or cylinder unloaders shall be utilized An inlet gas scrubber with a drain tank shall be provided for each gas compressor unit The inlet scrubber shall be designed to remove entrained moisture and particulates and shall be provided with automatic drain valves Scrubber vessel shall be designed and constructed to ASME Section VIII requirements

Coalescing filters and gas heater shall be provided, if required, on the fuel gas forwarding skid by the compressor manufacturer Two (2) - 100% capacity coalescing filters shall be provided Each compressor with its auxiliaries shall be mounted on a structural steel skid and preassembled for shipment to the maximum practicable extent

Gas compressors shall be motor driven units Electric motor enclosures shall be based on outdoors hazardous service

The fuel gas compressors and supporting equipment including local control panel shall be protected by a rain cover The fuel gas compressors shall have remote supervisory control and monitoring from the plant distributed control system Noise levels shall be analyzed and acoustic attenuation is to be provided if required

8 6 Distillate Fuel Oil System

8 6 1 General

A distillate fuel oil system shall be provided to supply #2 fuel oil to the combustion turbine as the backup fuel

8 6 2 Distillate System

Fuel oil will be delivered to the site by railroad tank cars A fuel unloading station consisting of two (2) - 350 m^3/hr capacity fuel oil unloading pumps with suction strainers shall be provided to pump the fuel oil from the tanker cars to the storage tanks

Unloading facilities (next to the railroad) were originally designed to handle mazut below track (open channel drainage system) for 72 tank cars The 12 tanks have automatic fire suppression system, and are enclosed in dikes

There are a total of 12 existing tanks, two of which are required in new service The tanks to be refurbished by Contractor are identified on Plot Plan Drawing C-102 Each tank has a capacity of 5000 cu m The tanks were previously used to store mazut (a heavy fuel oil) Contractor shall clean and refurbish the tank and all piping by means of a detergent wash to make the suitable system for storage of #2 fuel oil Contractor shall safely dispose of wash liquids

The distillate system shall consist of two (2) storage tanks, two (2) - 100% capacity fuel oil transfer pumps, pump suction strainers (duplex type) and controls, instrumentation and piping for delivery of the distillate to the combustion turbine fuel skid with excess flow return Piping materials of construction shall be in accordance with the recommendations of the combustion turbine manufacturer Fuel filters shall be provided

8 7 Heat Recovery System

8 7 1 General

Contractor shall provide two heat recovery steam generators (HRSG) to recover the exhaust heat from the two combustion turbines Each HRSG shall be designed to satisfy the performance requirements as shown in Contractor's energy and mass balance diagram

Each HRSG shall include the following equipment

Three (3) pressure level heat recovery system

Economizers (HP, IP, LP)

Steam superheaters

BFW preheater

Complete boiler trim including relief valves, stop and check valves and connections for blowdown, sampling and chemical injection and drum level instrumentation isolation

Boiler natural or forced recirculation system

Exhaust stack, expansion joint, ductwork and breeching

Necessary piping and instrumentation

Structural support steel, full access platforms, stairways and ladders

HRSG pressure parts, including boiler external piping shall be designed, manufactured, inspected, certified, tested and stamped per the requirements of the ASME Boiler and Pressure Vessel Code, Section 1

The HRSG tubular heat transfer sections shall be designed for a minimum pressure equal to 125 percent of operating pressure Extended surface, finned tubes may be used for HRSG sections, superheater, reheater and economizer The material and design shall be specifically suitable for the maximum pressure temperatures that may be imposed The extended surface material and design shall provide at least a safe margin in gas temperature to preclude oxidation of the metal under maximum design operating temperature

Tubes of all heat transfer surfaces (boiler, superheater, reheater, economizer) shall be adequately supported or designed to prevent tube vibration due to gas

flow or gas cavity frequency resonance The heat transfer section tubes shall be arranged to limit the flue gas velocity in order to protect the tubes from erosion, slag adhesion and fouling

All valves, control devices, control panels and instrumentation shall be accessible and conveniently located from grade or platforms HRSG parameters are to be controlled from the DCS interface

8 7 2 Economizers

Extended surface, drainable economizers shall be furnished as required to raise the feedwater supply temperatures to suitable drum approach temperatures and maintain appropriate exhaust gas stack temperatures Economizers shall be arranged for multipass water flow Nonsteaming economizers shall be provided Provisions for corrosion prevention of tubes and fins shall be made A tube corrosion allowance of 1 6mm shall be included, or alternatively, corrosion resistant materials may be used

Economizers shall be arranged for accessibility and water washing

Suitable means shall be provided to prevent back end corrosion when burning distillate with the sulfur content as specified in Table 8-2

8 7 3 Evaporator and Drum

Steam evaporators may be either vertical tube, natural circulation type or horizontal tube, forced circulation type The contractor is required to provide a cost/benefit analysis to substantiate his selection, subject to Owner approval

Steam drums shall have an inside diameter of sufficient size to provide adequate water surface without excess drum length that would result in large overhangs Sufficient volume shall be provided to allow for demand surges from 20% increase to 20% decrease in load per minute without boiler water carryover, or actuating high and low water alarms The ratio of usable drum storage volume (between normal liquid level and low-low level) to tube volume shall be a minimum of 0 6

The steam drum, internal steam-water separating purifiers and silica steam washing equipment (if required) shall be sized and designed to limit steam impurities at no greater than 0 2 ppm total solids and 0 020 ppm maximum silica in the steam leaving the drum at maximum continuous load or the steam quality requirements for the steam turbine, whichever is more stringent Maximum blowdown rate to achieve required boiler water purity shall not exceed 2% of maximum continuous load All internals shall be installed to facilitate removal and replacement for cleaning and maintenance with minimum

cutting required Manways not smaller than 30 cm by 40 cm shall be provided on all drum heads

8 7 4 Superheaters

The superheater shall be designed to meet the steam flow, pressure and temperature requirements of Contractor's energy and mass balance diagram They shall be of the multi-steam pass type, with provision for interstage steam temperature control by water spray desuperheater Superheater tubes, and also extended surface fins, if used, shall be of materials suitable for the maximum expected metal temperatures and pressures

The superheater shall be drainable and arranged with sufficient access for inspection and water washing Superheater shall be provided with vent and drain connections, safety relief valves, steam outlet stop and nonreturn valves

8 7 5 Deaerators

Contractor shall provide an integral deaerator for the HRSG to remove the dissolved gases and add heat to the boiler feedwater system The deaerator unit shall be designed and fabricated in accordance with ASME BPVC, Section VIII, Division 1 and shall be stamped with ASME Code stamp

As an alternate, Contractor may elect to furnish a deaerating condenser The deaerator unit shall be designed for maximum operating conditions and shall also be designed for full vacuum at the design temperature

The deaerator unit shall be designed to operate over the range of 5 percent to 100 percent of rated load and to withstand all system upsets and transients

The volume of water in the storage tank at normal water level shall not be less than 10 minutes of maximum design feedwater flow At the maximum water level, it shall not exceed 85 percent of the total storage tank volume

Contractor shall guarantee the deaerator for the following performance under any load in the specified range

- The temperature of the feedwater, measured at the storage tank outlet to feedpump suction, shall equal the temperature of saturated steam corresponding to the pressure in the deaerator

- Feedwater oxygen content, measured at the storage tank outlet to feedpump suction, shall not exceed 0 005 cubic centimeters per liter (7 ppb)

- Free carbon dioxide content shall be zero

8 7 6 Casing and Ductwork

The boiler, casing, and ductwork shall be designed for indoor installation and shall be fabricated to result in a totally gas-tight installation Insulation and lining shall be provided and designed for durability, long life and minimum maintenance under the anticipated operating conditions The insulation shall limit the outer skin temperature to a maximum of 54 5°C when the boiler is operating at maximum capacity Access doors shall be provided for inspection of the gas side surface and critical tubing areas The outer casing shall be gas tight and shall be of 6 mm, minimum, steel plate designed for a static pressure of 50 cm w g or combustion turbine exhaust pressure plus 10%, whichever is greater The casing shall be internally insulated and the insulation covered by a 20 ga minimum corrosion resistant steel lining The lining shall be Type 304 S S where gas temperature exceeds 427°C

The boiler casing shall have provisions for local and remote temperature and pressure indication at each section of the heat recovery steam generator

Ducts shall be of welded, gas tight construction, a minimum of 6 25 mm carbon steel plate on the inlet duct, and corrosion resistant mild alloy steel plate on the outlet duct, with supports and stiffeners to withstand the internal pressure as specified for the boiler casing Ducts shall be furnished with access doors to all cavities, sampling and instrument ports, and corrosion resistant expansion joints The combustion turbine exhaust flange expansion joint shall be designed to prevent excessive forces and moments on the turbine

The ductwork between the combustion turbine and heat recovery steam generator shall be internally insulated with high-temperature insulation Refractory lining shall not be used unless absolutely required by service conditions The internal insulation (and/or refractory if necessary) shall include a stainless steel plate lining to prevent erosion or spalling deterioration The lining shall be Type 304 or Type 316 stainless steel, 10 gauge minimum thickness, suitable for maximum expected gas temperatures The liner shall be supported by pins to prevent damage from personnel during inspections and repairs Ductwork shall be subject to vibrational analysis and reinforced accordingly

The outlet duct-to-stack breeching (if required) shall be externally insulated and covered by corrugated aluminum lagging Where required for personnel protection, the stack shall be insulated and lagged All insulation thicknesses shall limit surface temperature to 54 5°C

If a forced circulation vertical HRSG installation is selected, the HRSG stack shall incorporate flap-type dampers to trap the residual heat within the HRSG during outages, as well as to prevent ingress of rain and other adverse environmental conditions The dampers shall be remote operated and interlocked with the CT control system as appropriate

Ducts shall be furnished complete including all supports

The inlet duct shall be painted with a high temperature paint

8 7 7 Piping and Accessories

Contractor shall furnish and install motor operated vent valves for all drum and superheater/reheater vents A complete HRSG with water filled pressure parts and chemical cleaning system shall be furnished and installed by Contractor, including HRSG chemical cleaning supply and drain piping and all required valving Temporary chemical cleaning piping need not be code rated and may be removed after use

All connections within jurisdiction of ASME Section 1 shall be weld end Weld end connections 65 mm and larger in size shall be butt weld, 50 mm and smaller shall be socket weld Weld connections shall be at the end of long nipples so that no stress relieving of drums will be required after piping connections are made to these connections All field welded piping is to be inspected by code inspectors and reported to the appropriate insurance company

A main steam attemperator shall be provided Contractor shall also provide steam conditioning valves or pressure reducing valves with desuperheaters to bypass steam to the condenser during start-up and turbine trip conditions

Desuperheaters shall be installed with pipe and thermal sleeves of ferritic material of sufficient length to prevent droplets of water from coming in contact with the hot wall of the pipe

Sootblowing is not required Supplementary firing is not required

Contractor shall furnish, as part of his work, all engineering, design, labor and materials required to steam blowout the steam system piping Steam blow shall utilize "Silentsteam Steam Blow Method" or approved equal Steam blow acceptance criteria shall be in accordance with turbine manufacturer's written criteria Contractor shall be responsible for all required coordination to successfully perform the blowout cleaning Contractor shall also be responsible for disposal of pickling/passivating solutions after field cleanup/hydro test, and removal of temporary piping thereafter

8 7 8 Exhaust Stacks

Each exhaust stack shall be free standing, constructed of carbon steel, painted for corrosion protection and shall be 50 meters above the site grade

The exhaust stack shall include the following accessories and features

- Painter's trolley
- Galvanized test platform
- Test ports, suitably sized for Emission Monitoring System (EMS) probe(s)
- Galvanized ladder with cage from top of HRSG unit to test platform
- Access opening
- False bottom and drain
- Insulation for personnel protection at base and test platform level

8 8 Boiler Blowdown System

A single continuous boiler water blowdown system shall be provided for each set of HRSG drums Blowdown from the HP drum shall be directed to the IP drum A continuous blowdown tank shall be provided for the IP drum A separate blowdown tank shall be provided for the LP drum (if required) A continuous boiler water quality sampling and indicating system shall be provided as part of the boiler blowdown system

Contractor shall guarantee the steam purity at the main steam outlet, based on the steam turbine manufacturer's steam purity requirements, and therefore, shall set the drum water concentration limits, which consequently establish the blowdown rate Actual HRSG blowdown rate shall be based on the data supplied However, for design purposes, a 2 percent blowdown rate shall be used

Miscellaneous plant hot drains, and a separate inlet connection for the volume of water associated with draining the HRSG shall be piped to the atmospheric blowdown tank

The use of a heat exchanger shall be evaluated for use on unflashed blowdown between a pressurized flash tank and an atmospheric blowdown tank The heat exchanger will accomplish two objectives, (i) lower the unflashed blowdown temperature, requiring less quench water for temperature control of the atmospheric tank unflashed blowdown, and (ii) increase the temperature of the heat sink used to increase overall plant efficiency

The Blowdown System shall be designed in accordance with the National Board of Boiler and Pressure Vessel Inspectors, Rules for the Design, Construction

262

and Arrangement of Boiler Blowoff Equipment and ASME Code, Section VIII, Division 1

The atmospheric blowdown tank shall discharge to sewers or other bodies of water, where specified The temperature of the drain discharge shall not exceed 60°C Service water shall be used to quench the drains (to lower the total drain temperature) before dumping to waste

Contractor shall include continuous blowdown, miscellaneous drains and quench water in the overall site water balance diagram

8 9 Steam Turbine and Auxiliary Systems

8 9 1 General

The steam turbine shall be a non-reheat, 3000 rpm, condensing steam turbine exhausting into a surface condenser cooled by circulating cooling tower water The steam turbine shall be a three (3) pressure level turbine with HP, IP and LP sections It shall have uncontrolled LP admission at the inlet of the low pressure section The lube oil and hydraulic oil system shall be common for the steam turbine and its generator

8 9 2 Scope Requirements

Contractor shall provide one (1) multivalve, non-reheat, condensing steam turbine, including all steam, drain and vent piping, valves, control system piping and tubing, pipe hangers, electrical equipment integral to the turbine and associated auxiliary equipment including motors, starters, etc , as delineated, but not limited to, the following

1 Foundations, baseplate, foundation bolts, and grouting

2 Fabricated steel cabinet, located on side for termination of all unit mounted electrical devices

3 Motor-operated turning gear arranged for automatic engagement and disengagement including jog switch and turning gear motor ammeter

4 Exhaust connection to a water-cooled surface condenser

5 Exhaust casing relief diaphragms or condenser system rupture disks, and vacuum breaker

6 Special tools including slings, lifting bars for all rotors, and cases

7 Turbine performance thermal kit

8 Hydraulically operated steam admission governor valves system by Woodward or equivalent, including

Separate steam strainer with removable stainless steel element

Temporary fine mesh strainer screen

Provision for local testing of valve while turbine is in operation

Dual valve position transmitters to indicate valve position including mounting and wiring to turbine control system

Air operated drain valve for above seat drain

9 Hydraulically operated stop valves for main steam supply including the following

Separate steam strainer with removable stainless steel element

Temporary fine mesh strainer screen

Provision for local testing of valve while turbine is in operation

Dual valve position transmitters to indicate valve position including mounting and wiring to turbine control system

Air operated drain valve for above seat drain

10 Hydraulically operated bypass valve for steam diversion to surface condenser including the following

Separate steam strainer with removable stainless steel element

Temporary fine mesh strainer screen

Provision for local testing of valve while turbine is in operation

Dual valve position transmitters to indicate valve position including mounting and wiring to turbine control system

Air operated drain valve for above seat drain

11 Hydraulically operated LP admission valve(s) with power cylinder, servovalve feedback transducers, and steam strainer

12 Gland Steam Seal System

One gland steam seal system consisting of, but not limited to, the following major components

Gland steam seal supply and leakoff piping manifolds including interconnecting piping

Pressure regulator

Automatic steam seal regulating valves including motor operated shutoff and bypass valves

Excess steam supply automatic diverting or spillover valves, if required, and including air operated shutoff and bypass valves

Two (2) 100% capacity gland steam condenser exhausters

Gland steam condenser

13 Lubrication System

A self-contained pressure lubricating oil and control oil system shall be provided to supply oil for the steam turbine to all bearings, gear boxes, and continuously lubricated couplings Two (2) - 100% capacity AC lubrication oil pumps and one (1) dc lubrication oil pump shall be provided The oil system shall have the capability of having oil added during operation of the turbine Two (2) - 100% capacity AC motor driven vapor extractors and oil mist eliminators shall be provided

Contractor shall supply a stainless steel oil reservoir and two (2) - 100% capacity full-flow heat exchangers The oil reservoir shall have sufficient capacity to support the required retention time of at least 5 minutes based on the normal flow through the tank and shall be provided with fill and vent connections An automatic temperature control system shall be provided to control oil temperature leaving the heat exchanger

A duplex full-flow filter shall be provided on the suction side of each lube oil pump that shall be of the replaceable cartridge type The filter design shall incorporate the changeover valve

Clean and dirty lube oil storage tanks with local sight level gauges shall be provided for the lube oil system Each tank shall have a capacity of 110% of lube oil reservoir

The lubricating oil system shall be equipped with a cooling system that provides satisfactory lube oil cooling at the ambient extreme temperatures experienced at the site Temperature regulation of the oil shall be provided with controlled cooler bypass

The following system accessories shall be provided

Pressure switches to indicate oil pump status

Solenoid-operated oil valves

Float operated level indicator with alarm switch

Local or remote testing of high and low oil level alarm

Integral guarded oil piping system

Lubricating oil conditioner (purifier) and sight overflow

14 Electrical Equipment

Control devices, wiring, and cabinets

Terminal boxes, conduit, and fittings

Grounding network including all lightning and surge protection

Limit switches

All AC and emergency DC lights as required for normal operation

Auxiliary electrical power supply

Redundant power supply for the Electro-Hydraulic Control (EHC)

Control and Monitoring System with redundant digital interface to the Plant Control System (DCS)

All required process Instrumentation and Control devices

Switchboard equipment and instruments

Protective system to trip the turbine including electric overspeed trip test device

Vibration monitoring system components that are compatible with plant system

8 9 3 Steam Turbine Design Requirements

The steam turbine shall be designed to run reliably and continuously as well as being capable of operating in the sliding pressure mode Provisions shall be made to minimize thermal expansion, stresses, distortion, and vibration A self aligning thrust bearing shall be provided

The turbine shall be designed for exhaust to a water-cooled surface condenser

The turbine shall be designed to pass the design flow from both HRSG's (guaranteed heat rate) with valves 95% open and main steam at the design conditions of temperature and pressure The turbine shall be sized to satisfy the conditions of steam pressure, temperature, enthalpy, flow, and exhaust pressure as developed by both HRSG's at design conditions

Shaft vibration shall be measured by 2 proximity type (x and y axes) vibration detectors (Bently-Nevada or equal) located in each bearing Contractor shall provide adequate shop balancing to limit vibration on the shaft prior to shipment Vibration shall be to ISO 2372 or manufacturer's standards whichever is more stringent

All other parts of the steam turbine generator and accessories such as piping, brackets, cabinets, etc , shall be free of objectionable resonant vibration

Manufacturer's standard torsional and flexural analysis shall be provided for the complete coupled mechanical system

Contractor shall provide suitable galleries, steps of safety tread construction, railings, and grab handles to permit easy and safe access to parts of the unit above the operating floor grade which require inspection or readjustment

Upper half casings and main bearing caps shall be provided with lifting lugs or eyes

Products which contain asbestos are prohibited This prohibition includes items such as packings and gaskets even though the item is encapsulated or the asbestos fibers are impregnated with binder material

Interior recesses and passageways in the turbine in which condensation may be pocketed shall be adequately drained

Drain and vent valves which are operated during start-up and/or during shutdown shall be provided with hydraulic operators and limit switches

Exhaust casing relief diaphragms and one set of spare diaphragms shall be provided to prevent inadvertent overpressure of the turbine casing

Contractor shall select and provide suitable materials of proven design for the turbine blading, diaphragms, casing, nozzles, and other parts which are in contact with the steam so that deposition of any carryover contents will not result in corrosive or electrolytic action

For the purpose of minimizing as far as possible the corrosive effect of moisture in the steam, and of water erosion on those parts of the turbine subject to their action, the following shall be provided

1 The turbine blades in the wet region shall be hardened or otherwise treated to minimize erosion

2 Moisture-removal stages as required for turbine blading in the wet region

3 Gland seals of a material which shall be erosion/corrosion resisting under the conditions prevailing

4 All austenitic stainless steels shall be furnished in the solution-annealed, unsensitized condition

Protection against water induction shall be in accordance with the appropriate ASME recommendations Non-return valves shall be provided, as required

The steam turbine shall be designed to trip on any of the following conditions

- overspeed
- high vibration
- high thrust
- high differential expansion
- low lube oil pressure

8 9 4 Stop and Control Valves

The main steam stop, main steam control, and LP admission stop valves shall close upon actuation of the emergency trip system The main steam diversion valve shall be open A means of testing individual valves under load shall be provided to assure proper functioning

The design pressure and temperature of the main steam stop, diversion, and LP admission stop valves shall meet the requirements of the ANSI B31 1 Code

The main stop valve's strainer shall be independent A strainer shall also be provided ahead of the admission steam stop valve These strainers shall be designed to protect the valves and the turbine from foreign matter Temporary fine mesh screens for use during the startup period shall be included All screens shall be removable without disturbing the inlet piping One spare set of screen rivets shall be supplied

8 10 Condensate and Feedwater Systems

8 10 1 Condensate System

The condensate system shall deliver water from the surface condenser hotwell through the gland steam condenser and HRSG boiler feedwater preheater to the HRSG integral deaerator (or LP drum)

The condensate system shall include the following

- Two (2) - 100% capacity electric motor-driven condensate extraction pumps
- Two (2) - 100% capacity electric motor-driven condenser vacuum pumps
- One surface condenser (condenser shall be deaerating type if a deaerator is not furnished with the HRSG)
- Required valves, piping controls, and instrumentation for a complete and operable system

The condensate extraction pumps shall be the multistage, vertical can type, and shall be designed to operate continuously The pumps shall include a minimum flow line complete with flow control valves and a flow measuring device in the discharge line Condensate pumps shall be provided with mechanical seals

The equipment shall be designed and installed with provisions for easy access for service and maintenance

The complete pump and motor assembly shall be an integral assembly The pumps shall be of standard design

The design capacity of the main condensate pumps shall be based upon the maximum rated exhaust steam flow, and steam seal flow plus 10% margin

Condensate from the pump discharge shall be used as seal water The condensate pump shall be designed with steadily rising head characteristics Sufficient NPSH shall be available at all times, even during transients

Make-up water to the system shall be supplied to the deaerator by two (2) - 100% capacity make-up water pumps which will draw water from the demineralized water storage tank One (1) pump may be furnished if supply is to a deaerating condenser

The system control devices and process instrumentation shall be provided for safe and satisfactory operation and monitoring of the plant This system shall be controlled and monitored by the plant Distributed Control System

8 10 2 Feedwater System

The feedwater system shall supply heated, deaerated water from the HRSG integral deaerator (or low pressure drum) to the HP/IP sections of the HRSG under all plant load conditions

The system shall include the following

- Two (2) - 100% capacity electric motor-driven horizontal multistage HP feedwater pumps with interstage bleed for supply to the IP economizer

- Required valves, piping, controls, and instrumentation for a complete and operable system

The feedwater pump design flow shall be set at 110% of the heat balance guarantee flow to the HRSG to accommodate turbine guaranteed flow, plus 5% for surges and blowdown, plus 5% for impeller wear, systems fouling, etc

The feedwater pumps shall be designed and installed in such a manner as to provide for easy access for service and maintenance

The complete pump and motor assembly shall be skid mounted for all pumps The pumps shall be of standard design

Electric motors shall be complete with lubricating and cooling systems, etc , as required by the motor manufacturer

The pump bearings must be designed to accommodate displacement of the pump impeller due to thermal expansion Vibration monitors shall be installed as required

All rotating parts of the pumps shall be statically and dynamically balanced

The minimum flow valves shall be automatically actuated and shall be provided and sized by the pump vendor The ratio of HP and IP condensate flows shall govern the controls for stable pump operation

Strainers shall be included in the suction lines to protect the pumps from damage In addition, a fine mesh strainer shall be provided for startup purposes Boiler feed pumps shall be provided with mechanical seals

Materials of construction for the boiler feed pumps shall be as follows

Casing	12% chrome
Impeller	12% chrome
Shaft	Carbon Steel
Shaft Sleeve	Stainless Steel

The system control devices and process instrumentation shall be provided for safe and satisfactory operation and monitoring of the plant This system shall be controlled and monitored by the plant distributed control system

8 10 3 Surface Condenser

Contractor shall furnish a water cooled surface condenser for rejecting heat from the steam turbine cycle Condenser may be a deaerating condenser to meet 7 ppb of dissolved oxygen in the condensate if Contractor elects not to furnish a separate deaerator on the HRSG's Multipass cooling water tubes shall be provided

The condenser shall be designed in accordance with the codes and standards established by the Heat Exchange Institute for steam surface condensers A transition duct with expansion joint from the exhaust steam turbine flange shall be provided and designed in accordance with the information provided by the steam turbine supplier Tube support sheets shall be provided to minimize tube vibration The condenser shall be provided with adequate draining and venting

Condenser water boxes shall be provided with an automatic vacuum priming system for use during startup operation Carbon steel water box with a surface corrosion resistant coating and an impressed current cathodic protection system shall be provided The condenser shall be installed to expand freely within the requirements specified by the steam turbine supplier It shall be designed for overpressurization and to withstand the effects of being flooded

The condenser tube material shall be aluminum bronze or other metal compatible with the cooling water characteristics and a value of 90% cleanliness factor is to be used for the condenser sizing calculation Tube sheet material shall be compatible with the tube material Provision shall be made for future installation of a tube cleaning system using foam pigs

A hotwell having a storage capacity of 5 minutes during guarantee point conditions shall be provided The condensate outlets will be provided with anti-swirl vortex breakers The hotwell shall have connection(s) for obtaining a continuous sample stream for analysis

The air removal equipment shall consist of two (2) - 100% capacity motor driven liquid ring vacuum pumps The time required to hog the condenser shall be maximum 30 minutes Both vacuum pumps may be used for hogging, however only one (1) shall be used for holding

The surface condenser shall also be designed to accommodate steam flow if the steam turbine is shut down for maintenance, however the available surface area shall not be changed In this case, the GGT's and HRSG's can operate at full power output without total plant shutdown Steam bypass lines and pressure reducing stations shall be provided, and the condenser admission distributor shall be fabricated, such that the condensing pressure is permitted to rise in order to match the normal cooling water flow at a higher temperature rise

A condenser flashbox shall be provided to accommodate all the drains from the turbine, steam chests and gland sealing system The flash box shall be adequately sized to accept all operating conditions including warming up and starting the unit, condensate extraction pumps on recirculation via the gland steam condenser, high load running and emergency turbine trip and shut down

8 11 Circulating Water System

The function of the circulating water system is to provide cooling water to the condenser for the purpose of condensing turbine exhaust steam for reuse in the turbine cycle and also to provide cooling water to the plant closed cooling water heat exchangers The existing system provides condenser water to a variety of equipment in the existing CHP plant

276

The existing system will be rehabilitated and utilized for the new CCGT plant It consists of the following

- Two (2) - Parabolic natural draft cooling towers are presently rated at 10,500 cu m/hr each of water flow Each shell will be refurbished by shotcreting as necessary and the old wooden slat fill replaced by modern plastic fill to increase the capacity to 13,000 cu m/hr each The cooling towers are labeled "T-4" and "T-5"

- Four (4) - horizontal centrifugal pumps in a pit structure approximately 2m below finished grade Each tower basin is connected to two pumps with two dedicated buried suction lines There are existing suction screens and valved crossovers for maintenance The pumps will be replaced with new pumps, operating at increased capacity, installed on existing foundations Motor starters and wiring will be replaced It is also expected that all suction and discharge piping systems can be re-used as well as chemical treatment

- Blowdown system will be based on 20% i e , 1 lb blowdown to 5 lb makeup Design criteria for the cooling tower system based on summer conditions, are as follows

Cold water temperature	31°C
Hot water return temperature	41°C
Steam condensing temperature	44°C

8 12 <u>Water Treatment System</u>

8 12 1 General

Contractor shall utilize the existing make-up demineralizer system and make-up demineralizer pretreatment system for the CCGT plant Make-up water to the plant will be well water with the characteristics as shown in Section 3 4 2 Contractor shall utilize water from an existing on-site service water storage tank Existing horizontal centrifugal service water pumps are provided to pump the water from the tank to the following services

(1) inlet to make-up demineralizer system

(2) inlet to potable water system

(3) supply service water needs for plant

(4) inlet to sodium hypochlorite system

8 12 2 Demineralized Water

The existing three-train 750 T/H water treatment system has 300 T/H extra capacity Design capacity for all seven units is 450 T/H Raw water supply up to 2000 l/s is supplied from 12 deep wells located about 17 5 Km from the TPP Filtration is not required Demineralizers are two stage cation, anion, degasifier, cation, anion trains of typical Soviet design The Contractor shall utilize the existing Plant demineralizer system for makeup water to the CCGT facility

A new demineralized water storage tank system will be provided for the CCGT plant It will consist of

- Storage Tank
- 2x100% capacity centrifugal pumps for makeup to the surface condenser hotwell and for transfer to the NO_x feedwater storage tank
- Mixed bed demineralizer
- NO_x feedwater storage tank
- 2x100% NO_x feedwater centrifugal pumps

A mixed bed demineralizer will be provided in order to remove excess silica from the existing DW when water is needed for NO_x suppression in the liquid fuel firing mode for the combustion gas turbines Silica is the single trace component most likely to cause failure on the gas turbine blades and must be carefully controlled Since the performance duration on liquid fuel is expected to be only occasional during the year, and only when natural gas is curtailed, the mixed demineralizer need be only one vessel during this operation and regeneration can be accomplished when convenient The vessel shall be designed based upon a flux rate of 40 cu m per hour of water flow per cu m of ion exchange resin Regeneration solutions of sulfuric acid and caustic soda will be supplied from the chemicals storage area Water of the following quality will be produced

Parameter	Quality
Conductivity, micromho/cm at 25 degrees C	0 1
Total dissolved solids, mg/l	0 04
Total hardness, mg/l as CaCO3	0
Total silica, mg/l as SiO2	0 01
pH	6 - 8
Total suspended solids, mg/l	nil
Carbon dioxide, mg/l	nil

Metering instrumentation shall be provided to differentiate, for billing pumps, the DW usage for the CCGT facilities

8 13 Closed Cooling Water (CCW) System

A closed cooling water system shall be provided for cooling of plant equipment and subsystems CCW is clean, filtered and treated so as not to clog heat transfer passsages The following equipment and systems shall be served by the closed cooling water system

- CT/ST Generator Coolers
- ST and CGT Lube Oil Coolers
- ST and CGT Auxiliaries
- ST/CGT Hydraulic Power Unit Coolers
- Sample Coolers
- Gas Compressors' intercoolers and aftercoolers
- Boiler Feed Pump Coolers

The closed cooling water system shall be interconnected with the circulating water system Two (2) - 100% capacity pumps shall be provided to circulate the cooling water through two (2) - 100% capacity closed cooling water compact heat exchangers to achieve close temperature approach to the circulating cooling water The take off connections to the coolers shall be downstream of the debris filter Materials of construction shall be stainless steel Contractor shall provide all required valves, piping, control devices and instrumentation for a complete and operable system This system shall be controlled by the plant distributed control system

A head tank shall be provided to maintain pump NPSH, to accommodate inhibitor addition, and to allow for thermal expansion of the fluid

8 14 Chemical Injection System

8 14 1 General

The chemical injection systems consist of the HRSG chemical storage and feed systems and the circulating cooling water chemical storage and feed systems

8 14 2 HRSG Chemical Storage and Feed System

The HRSG chemical storage and feed system shall supply water conditioning chemicals to the feedwater-steam-condensate cycle to maintain the desired boiler water and steam chemistry, to minimize corrosion and to prevent scale formation in the cycle

An amine based or other appropriate corrosion control chemical shall be fed to the condensate system for pH control An oxygen scavenging solution shall be fed to the deaerator to maintain and control dissolved oxygen in the boiler feedwater Sodium phosphate and sodium hydroxide solutions shall be fed to each boiler drum to maintain the desired boiler water pH and phosphate residual

Separate chemical injection units shall be provided for the plant as follows

- oxygen scavenger chemical injection unit, chemical shall be injected into the deaerator storage tank

- neutralizing amine chemical injection unit, chemical shall be injected into the boiler feed pump suction line

- phosphate based dispersant chemical injection unit(s), chemical shall be injected into each boiler drum

Chemicals are provided in drums or bulk containers These are to be stored indoors within a curbed area for spill retention Personnel safety is to be strictly observed

Each chemical injection unit shall be provided with a day tank with agitator, measuring tank, two (2) 100% capacity metering pumps, level gauge, relief valve, controls, and distribution piping Inventory and usage is monitored by change in gauge level

8 14 3 Circulating Water Chemical Feed Systems

The circulating water system shall be provided with a suitable biocide/chemical injection system (See Section 8 15 for details) and with sulfuric acid injection for pH control A local PC shall provide proportional feedback control

8 15 <u>Sodium Hypochlorite Generator, Storage and Distribution System</u>

A sodium hypochlorite generator, storage and distribution system shall be furnished by Contractor The function of the sodium hypochlorite generator, storage and distribution system is to manufacture, store and inject sodium

hypochlorite solution as a biocide in the circulating water system, in the potable water system and to the wastewater effluents

The system shall utilize the electrolytic process for the manufacture of sodium hypochlorite The system will be configured for salt delivery to the salt storage tanks Pumps shall be provided to pump the salt solution through the generators to storage vessels at a constant flow rate Materials of construction shall be entirely non-metallic

The flow discharge from the sodium hypochlorite generators shall be piped to atmospheric storage tanks and be provided with a system for the safe release of the hydrogen by-product Distribution pumps shall pump the sodium hypochlorite solution from the storage tanks to points required for the injection of the biocide A control panel shall be provided for automatic or local control of the process If required by the manufacturer's design, a hydrochloric acid recirculation system shall be provided in order to clean the electrolytic cells during shutdown periods

The system shall be located indoors except for the storage tanks which will be located in a hydrogen exclusion area Major process equipment shall be non-metallic or made of materials that are non-corrosive with the sodium hypochlorite environment

The area where the hypochlorite generators are located shall be classified as "Potentially Hazardous" as defined by NFPA 70, Article 500, Class I, Division 2, Group B

The system shall be sized to provide a nominal continuous dilute dose to the circulating water systems in order to maintain a residual of 2 mg/l sodium hypochlorite concentration

Equipment shall consist of the following

1 - salt storage and saturation tank

2 - 50% capacity centrifugal salt water supply pumps with motors

2 - 50% electrolytic cell sodium hypochlorite generators

2 - 50% capacity vertical cylindrical sodium hypochlorite storage tanks and means for hydrogen by-product ventilation, based on five (5) minute residence time

3 - 50% horizontal, centrifugal sodium hypochlorite distribution pumps with motors

2 - 50% SCR controlled, transformer/rectifiers

1 - Master Control Panel

1 - hydrochloric acid cleaning system, if required by manufacturer's design

The system shall be arranged to operate at 50% capacity if one of the two trains is shut down The system shall be designed to dispense chemical solution on an as-needed basis since the chemical is unstable and decomposes fairly rapidly

8 16 Hydrogen Storage System/CO_2 System

The function of the hydrogen storage system shall be to store hydrogen for fill, continuous make-up and purge refill for the two CTG's and the one STG Hydrogen is manufactured in the existing CHP plant and storage bottles are to be delivered to the CCGT facility as required

The working pressure of hydrogen storage vessels shall be 14 MPa Size and number of hydrogen storage vessels shall meet electric generator hydrogen cooling system volume and pressure fill requirements

CO_2 storage bottles shall be provided, sized to permit two (2) complete purges of the CGT Either high pressure bottles or low pressure (refrigerated bulk CO_2 storage vessel) is acceptable

8 17 Compressed Air System

The compressed air system shall be designed to provide reliable instrument and service air for the plant The system shall be designed to provide air at a pressure of 0 862 MPa Air shall be provided from a tie-in to the existing CHP header Required dew point is (-)40°C

8 18 Wastewater System

Wastewater shall be treated to meet applicable standards (see Section 4 0) for discharge to the Hrazadan Channel The system shall include collection piping, waste collection sumps, oil/water separator(s) and packaged sewage treatment plant The process wastewater includes waste streams from regeneration waste, plant oily waste, sanitary waste, drains, and other miscellaneous streams Wastewater sample points shall be provided in the system

The process waste streams shall be combined, collected, or disposed of separately depending on the type of treatment required The plant oily wastes shall be treated in an oil-water separator(s) Oil and sludge will be disposed of

off-site intermittently Efficiency of oil-water separator shall be 15 ppm (or better) of suspended oil in water

Water treatment system regeneration waste, HRSG and gas turbine wash waste, and equipment and sample drains shall be routed to the waste collection sumps and/or neutralization tank Sanitary waste shall be routed directly to an onsite sewage treatment plant Prior to release to the discharge canal, wastewater shall be processed, as required to meet the discharge effluent standards stated in Section 4 0

The GTCC area as listed below, will contain its own collection and handling systems from which a final aqueous effluent will be directed to the existing neutralization tank

The existing CHP facility includes a wastewater collection system, neutralization tank and pump which discharge to the river outfull

The process wastewater treatment, collection, and disposal system shall include the following equipment/systems

- Coalescing type oil/water separator(s) system including
  - Oil waste storage tank
  - Clean water sump and pump
  - Oil water separator
- Two 100-percent-capacity waste transfer pumps
- Steam turbine area sump station
- Combustion turbine area sump station (CGT wash sump sized to contain the volume of waste water produced by washing the CGT twice)
- Floor sump or tank to contain fuel/water mixture rejected following aborted start on fuel oil
- HRSG area sump station (HRSG wash sump)
- Water treatment area sump station
- Control system and components and instrumentation required for a complete and operable system This system shall be controlled locally with system data communicated to the plant control system for information

8 19 Fire Protection System

A complete pressurized water main fire protection system exists in the CHP plant The fire protection system shall provide all the equipment and subsystems necessary for the Plant to be in compliance with required codes The source of water for the GTCC plant fire protection system will be from the service water storage tank and existing fire pumps and buried pipe mains

The fire protection system shall include the following major equipment and subsystems, as a minimum

- Underground fire loop with fire hydrants spaced a maximum of 75 meters (250 feet) apart

- One automatic wet pipe sprinkler system for office and administration areas

- Deluge systems with thermal detectors for the step up and auxiliary/start-up transformers

- A water spray deluge system with thermal detectors for the CT/ST lube oil reservoir, purifier and oil tank

- CO_2 extinguishing agent system with automatic detection for the combustion turbine compartments, to be supplied by the GT Vendor

- Fire walls for transformers (2 hour rated)

- 2 hour rated fire walls separating the main control room, electrical switchgear room, battery room, and office areas from each other and from other areas of the plant

- A fire detection and alarm system with a main panel in the control room and zone panels in various remote locations to be monitored at the main panel and including

    - Monitoring panel and annunciator plant diagram at building entrance
    - One main control panel for monitoring the status of zones with visual indication, audible alarm, and test provisions
    - Local zone control panels for monitoring the status of detectors, alarm boxes, suppression systems, and valves
    - Fire alarm pullboxes
    - Smoke detectors for areas in control room, electrical switchgear room, battery room and office areas

- Thermal rate of rise detectors for deluge systems/preaction system
- Thermal detectors for maintenance shop/warehouse area

- Manual suppression equipment, including portable hand-held dry chemical and CO_2 extinguishers, wheeled CO_2 extinguishers, hose stations and racks, hose houses, and fire hydrants

Standpipes and hose stations shall be provided in the interior of the CT/ST/ generator building in areas adjacent to or within stairs and at other points not greater than 23 meters apart in all normally accessible areas Hose stations shall be provided with 23 meters length of 37 5 mm hose with 65 mm angle valve Valve discharge shall be fitted with removable 65 mm to 37 5 mm adapter

All other buildings shall be provided with portable fire extinguishers

8 20 Heating, Ventilating, and Air Conditioning (HVAC) System

The HVAC system for the Plant shall be designed for an outdoor design coincident temperature condition as follows

Summer		Winter	
dry bulb	31°C 65% RH	dry bulb	6°C

The HVAC system shall provide an acceptable operating environment for personnel and equipment within the plant buildings The HVAC system shall consist of area cooling and air conditioning, as required and shall include

- CT/ST Generator HRSG Building, Sodium Hypochlorite Building, Hydrogen Storage Area (inside design temperature maximum 40°C, minimum 10°C)

  - One lot of roof and wall mounted exhaust fans
  - One lot of air inlet louvers

- Control Room (inside design temperature = 23 8°C)

  - Two (2) 100% HVAC capacity units, including ductwork, insulation and controls

- Electrical Switchgear Rooms (maximum temperature, 40°C, minimum temperature 10°C)

- One air-handling unit system, including ductwork, air filters and controls
- Battery room, spark resistant exhaust fans

- Administration Offices, Locker Rooms, Dining Room, etc (inside design temperature 23 8°C)

  - One split HVAC system, including ductwork, insulation and controls
  - One lot of exhaust fans for toilet/locker room areas
  - Smoking room with oversized exhaust fan and high performance filter

- Water Treatment System Control Room/Laboratory Room (design temperature, 23 8°C)

  - One split HVAC system including ductwork, insulation and controls

The control room HVAC system shall be designed to provide an adequate comfort level for human occupancy 24 hours per day The design shall include filters, redundant air conditioning units, dampers, and controllers Environmental conditions inside the control room shall be suitable for the electronic equipment located in the room

Air conditioning shall include cooling of the inlet filtered air Air velocities in ducts and from louvers and grills shall be sufficiently low so to maintain acceptable noise levels in areas where personnel are normally located

Fans and motors shall be mounted on antivibration bases to isolate the units from the building structure Exposed fan outlets and inlets shall be fitted with guards Wire guards shall be provided for belt driven fans and arranged to enclose the pulleys and belts

Air filters shall be housed in such a manner to facilitate removal The filter frames shall be specified so that the air being handled passes through the filter without leakage

Ductwork, filter frames, and fan casings shall be constructed of mild steel sheets stiffened with mild steel flanges and galvanized Ductwork shall be of the sectional bolted design type and shall be adequately supported Duct joints shall be leaktight

Grills and louvers shall be of adjustable metal construction

The battery room ventilation shall be designed to prevent dangerous concentration of hydrogen gas and shall limit the accumulation of hydrogen gas

to values of not more than 2% of concentration in the battery room Full standby capacity shall be provided for the battery room exhaust system

Ventilation systems for process areas shall be sized to maintain the design temperatures based on manufacturer's data on equipment heat releases in the area ventilated

All outside air intakes shall be sized to limit the face velocity to 167 meters per minute through the free area of the intake louvers (intake louvers to be a minimum of 50 percent free area

Thermal insulation with vapor barrier shall be provided on ductwork surfaces with a temperature below the dew point of the surrounding atmosphere to prevent vapor condensation All ductwork used for air conditioning purposes shall be insulated, ductwork used for ventilation purposes shall not require insulation

Equipment shall be arranged to allow easy removal of components as well as full access for inspection and maintenance

HVAC equipment and ductwork shall be equipped with controls and fire dampers in accordance with NFPA No 90-A

Exhaust systems shall be provided for toilet and shower areas Outdoor ventilation air shall be based on a minimum of 0 6 cubic meters per minute per person based on normal room occupancy These areas will not be air conditioned

8 21 <u>General Equipment Requirements</u>

8 21 1 Vessels and Tanks

Contractor shall design, procure, install and test required vessels and tanks Capacity requirements shall be per this Specification If particular capacities are not stated herein, good engineering judgment and standard industry practice should be followed in determining vessel and tank capacities

Contractor shall determine appropriate material of construction (if not otherwise specified), required material thickness and required linings and surface coatings if any, based on the fluid to be stored and serviced and Code requirements Materials for major tanks shall be as follows

Service Water Storage Tank - Carbon steel with suitable interior and exterior coatings Use existing tank

DMW Storage Tank - carbon steel with suitable exterior coating and interior phenolic epoxy coating

Wastewater Neutralization Tank - FRP

Bulk Acid Storage Tank - Lined Carbon Steel or Fiberglass Reinforced Polyester (FRP) with suitable UV protection for outdoor location

Bulk Sodium Hydroxide Storage Tank - Lined Carbon Steel with Nickel bayonet heater

HRSG Blowdown Tanks - Carbon Steel

Fuel Oil Storage Tanks - Carbon Steel Use existing tanks

A 1 6 mm minimum corrosion allowance shall be provided above the Code or standard computed minimum wall thickness, as appropriate, for the tank shell, heads, nozzles, manhole necks and cover plates for all tanks

Outside storage tanks shall be designed for the complete range of ambient conditions expected

Overflow connections and lines shall be provided Storage capacity shall be based on a fluid level above tank draw-off connections to the invert of the tank overflow The overflow line shall be at least one size larger than the largest incoming line or combination of incoming lines that can simultaneously fill the tank

Ladder, platform and walkway design shall be provided for maintenance and access and in accordance with good safety practices

When required by service, tanks shall be designed to full vacuum in addition to the specified or required design pressure

All tank joints shall be constructed so that openings in the shell and shell reinforcements do not intersect longitudinal or girth joints

Vertically mounted tanks shall have supporting skirts Supporting skirts shall be designed to permit access inside the skirt for maintenance of the tank and skirt Horizontally mounted tanks shall be provided with supporting saddles

Manholes shall have hinged, bolted flange-type covers complete with gaskets, nuts and bolts, and welded-on hand grips or lifting lugs Manholes shall not be less than 600 mm in diameter

Shop fabricated storage tanks shall have permanent lifting lugs provided to facilitate installation and maintenance Lifting lugs shall be arranged to provide for an equal distribution of weight when lifting

All steel tanks shall be welded Riveted tanks are not acceptable Welding procedures, welders and welding operators shall be qualified in accordance with ASME BPVC, Section IX Welding and repair welding shall be performed in accordance with the requirements of the design code or standard of the individual tank

Tanks shall be provided with all necessary openings, welding ends and flanged connections Maintenance drain connections shall be provided for complete tank drainage

Tanks having a design pressure in excess of 103 kPa shall be designed and fabricated in accordance with ASME BPV Code, Section VIII, Division 1, and shall be stamped with the ASME Code Stamp Water storage tank and condensate storage tank shall be designed, constructed and tested to AWWA D-100 Fuel oil storage tanks shall be designed and constructed to API-610

Tanks and vessels shall be tested and inspected in accordance with the applicable codes and standards

8 21 2 Pumps

Contractor shall provide required pumps, pump motor drivers and all required accessories Pumps required to be in continuous operation shall have 100% spares

Fuel oil pumps shall be designed to API standards All other pumps shall be designed to ANSI standards

Pumps shall be sized for an additional 10% flow capacity, and 20% head capability above the calculated process requirements Full size impellers shall not be used

Pumps for the same service shall be identical in design, construction and performance and similar parts of the pump shall be interchangeable Pumps furnished for the same service shall be designed to operate continuously in parallel over the pump operating range without cavitation

Contractor shall prepare pump performance characteristic curves on which total head, brake horsepower, required net positive suction head (NPSH) and efficiency are plotted as functions of volumetric flow rate between shut-off and

run-out Total head and pump efficiency shall be defined in accordance with Hydraulic Institute Standards Standard motor sizes shall be used

Pumps shall be designed to ensure that there is adequate margin between NPSH required and available NPSH for operation at run-out conditions without pump cavitation

Contractor shall guarantee that all pumping equipment shall meet the design conditions calculated Tolerances on the guaranteed performance shall be in accordance with the Hydraulic Institute Standards

Pump head curves shall rise continuously from design head point to shut-off The pump shut-off head shall be a minimum of 120 percent of the total head at the design point Motors shall be sized for brake horsepower at run-out conditions of the selected pump at maximum impeller size

Strainers (startup or permanent) shall be installed in the suction piping of all horizontal pumps Fuel oil pumps shall be provided with permanent duplex type strainers

Horizontal centrifugal pumps shall have radially fully balanced impellers The driver shall be mounted on an extension of the pump bedplate and shall drive the pump through a flexible coupling

Where necessary, pumping systems with variable flow requirement shall have a recirculation line for pump protection The recirculation line will normally be routed to the source of pump suction Modulating or two-position recirculation valves or restriction orifices shall be used as appropriate For boiler feedwater pumps and condensate pumps, modulating control valves or combined recirculation/check valves shall be used Precautions shall be taken against fluid overheating at high recirculation rates The pump vendor shall provide the recirculation piping

Wetted pump parts shall be suitable for the fluid handled by the pump The pump materials shall be selected to resist cavitation, erosion, corrosion and other destructive influences

Each component, including the motor driver, shall be designed to resist all static and dynamic loads imposed on it during all modes of pump operation The operating modes include normal operation in any parallel arrangement, start-up, shutdown, and reverse rotation at maximum reverse speed

Stuffing boxes, seals and packing glands shall be provided, as required, between fixed and rotating parts, and shall be designed for minimum leakage of

lubricating water Seal injection breakdown orifices shall be furnished as required to reduce pressure and to control injection flow

Pumps with mechanical seals shall be arranged to facilitate removal of the seals Shaft slingers shall be specified to prevent gland leakage water from entering the bearing housings Boiler feed pumps and condensate pumps shall be provided with mechanical seals

Bearings shall be of ample surface area and, for large pumps, of the journal type, split for easy maintenance, and arranged to facilitate removal of the pump impeller for repairs All boiler feed pumps shall have thrust bearings

Where bearings are of the ball or roller type, the inner face shall be fitted directly on the shaft and located by a machined shoulder on the shaft Intermediate shaft bearings for vertical suspended type pumps shall be securely connected to the main pump support tube

Bearings requiring cooling water from the CCW system shall be provided with the necessary pipework, valves, and strainers In the case of vertical pumps used for fresh water or condensate service, bearings located below water level shall be water lubricated For pumps in dirty water service, bearings shall be grease lubricated

The weight of the impeller and shafting for vertical suspended pumps shall be carried by a thrust bearing, ample access shall be provided for examination and maintenance of the bearing Provisions shall be made at each end of the bearing to contain the oil or grease within the bearing housing

Bedplates shall be of adequate proportions and stiffness to resist the loads from shipment and service

Pump vibration after field installation shall meet manufacturer's criteria or ISO 2372 whichever is more stringent

Vent and drain valves shall be provided, where necessary, at appropriate points on the pump casing Horizontal split casing pumps shall allow for withdrawing the removable half casing and impeller without disturbing any of the water pipes or valves Horizontal end suction pumps shall allow for withdrawal of the impeller from the motor end without disturbing the motor or suction and discharge piping

Pumping units shall be designed for ease of inspection and maintenance Motor, casing and inner assembly shall be readily removable without disturbing the suction or discharge piping

Renewable shaft sleeves shall be provided at sleeve bearing points and stuffing boxes to prevent shaft wear

Impellers shall be keyed and nut-locked to the shaft to withstand all operating loads Impellers shall be statically and hydraulically balanced

Couplings shall be provided to connect motor driver and pump shafts Shaft couplings shall be the sleeved, keyed type Guards shall be provided for motor-pump couplings

Lifting lugs shall be provided to facilitate handling during maintenance and removal

Fuel oil pumps shall be positive displacement, screw or herringbone gear type suitable for operation with No 2 diesel fuel oil Motors for fuel oil pumps shall be sized for cold start at 3° C

Fuel oil pump casings shall be of high grade cast iron, ductile iron or cast steel, and constructed to permit disassembly and removal of rotors without breaking piping connections

Fuel oil pump rotors shall be designed to deliver a smooth, pulsationless flow over the entire operating range

Metering pumps for chemical solutions services shall be positive displacement rotary or reciprocating, constructed of 316 SS in contact with the process fluid Capacity control may be manual or automatic

Sump pump shall be vertical simplex or duplex with integral sump cover and level switch In areas of acid washdown concern, appropriate plastic materials of construction should be specified

8 21 3 Piping

Contractor shall engineer, design, furnish, install and test all piping systems required

The piping shall include all fittings, flanges, bolts, nuts, washers, gaskets, caps, miscellaneous specialties, temporary strainers and pipe hangers and supports Asbestos gaskets are not permitted

Piping shall be sized based on maximum and minimum flows associated with the particular system and/or equipment being serviced In general, piping shall be sized based on the velocity criteria given below Pressure drops must be

calculated including factors for fouling and margin and checked to ensure that excessive pressure drops and NPSH concerns are avoided

Feedwater Lines	3-4 8 m/s
Condensate Lines	1 2-2 1 m/s
Pump Suction Lines (except Condensate Pumps)	1 5-2 1 m/s
Condensate Pump Suction Lines	0 6-0 9 m/s
Water Lines to 10 2 cm	1 5-1 8 m/s
Water Lines 15 2 cm and larger	2 3-3 6 m/s
Saturated Steam 0-1 4 MPa	1200-1830m/min
Saturated Steam above 1 4 MPa	1830-3050m/min
Superheated Steam	3050-4570 m/min

Oil lines shall be sized to ensure turbulent flow based on the required flow rates and the viscosity of the oil at the pumping temperature

Piping shall be designed with adequate flexibility to permit expansion of the piping without imposing excessive forces and moments greater than those recommended by the manufacturer of the connected equipment Piping segments 65 mm and larger with a normal operating temperature above 93°C shall be stress analyzed, as required by ASME B31 1 Stresses in the piping systems designed by the Contractor shall not exceed those allowed by the applicable code

Generally, piping material for the various plant services shall be as indicated below

Steam	-	alloy steel, steel
Fuel Gas	-	stainless steel (downstream of coalescing filters), carbon steel (upstream of coalescing filters)
Fuel Oil	-	carbon steel
Lube Oil	-	stainless steel, pickled carbon steel
Cooling Water system	-	carbon steel or cast iron with cement lining for buried headers, all other systems carbon steel
Fire Protection	-	carbon steel, ductile iron for underground piping, carbon steel or cast iron for aboveground piping
Condensate, Feedwater	-	carbon steel
Chlorine solution	-	plastic pipe
Chemical feed lines	-	stainless steel
Sulfuric acid, all concentrations	-	Alloy 20

Caustic, all concentrations	-	stainless steel
Instrument air	-	stainless steel
Service air	-	carbon steel
Make-up demineralizer	-	stainless steel
Chemical waste	-	stainless steel or plastic pipe

Piping shall be designed to facilitate plant operations and maintenance Adequate aisle space shall be provided to allow operating personnel to make inspections during routine tours of the plant All piping shall be designed and installed allowing sufficient clear space around all equipment to permit disassembly and removal for maintenance and repair

Piping systems transporting steam shall be of welded construction Raised face flanges shall be used, where required, to connect to specific components Threaded joints shall not be used for steam, fuel oil, and lube oil piping and high-pressure gas service Flat face flanges should be used only for water, air and inert gas service

Welded pipe 65 mm and above shall be butt weld construction, 50 mm and below shall be socket weld construction Weld end preparation shall be in accordance with ANSI B31 1 and ASME BPVC Section 1

Above-grade piping systems rated ANSI Class 300 or less may be flanged in accordance with the Contractor's standard design

Piping systems shall be designed with high point vents and low point drains

Steam piping systems in the plant shall be designed to have a positive slope in the direction of steam flow in the cold position and no negative slope in the hot position Automatic drain devices and manual devices shall be installed, where appropriate, to prevent the accumulation of condensate in the piping system

Means shall be provided to fill and clean loop seals

Piping to and from outdoor tanks shall have allowances for tank settlement

Contractor shall provide detailed scaled piping drawings showing all piping 65 mm and larger, valves and instrumentation tap locations Drawings may be isometric and plan, or plan and sections

Pipe hangers and supports shall be designed in accordance with the operating conditions of the pipeline being supported Pipe hangers and supports shall be designed and fabricated with appurtenances and accessories in accordance with the requirements of ANSI B31 1, MSS SP-58 and MSS SP-69

A detailed piping classification list shall be submitted for the Employer's review The piping classification list shall specify all materials for pipe, fittings and accessories for all piping systems within the plant, and pertinent information for each class (e g , pressure, temperature, service, etc)

Steam piping shall be provided with low point drain stations and/or steam traps Steam traps shall be provided with upstream strainer, isolation valves, downstream check valve and a bypass with globe valve Trap bodies and covers shall be cast or forged steel and shall be designed to operate at the maximum working pressure and temperature of the steam piping to which they are connected Traps shall be piped to drain collection tank(s), floor drains, or sumps and returned to the cycle if practicable

Contractor shall provide documentation verifying successful completion of required testing and compliance with safety codes (as applicable) for piping systems

Piping system shall be pressure tested in accordance with the requirements of ANSI B31 1

8 21 4 Valves

Contractor shall provide, install and test required valves, appropriate valve operators and accessories to allow the plant to operate safely, efficiently and in accordance with all applicable codes

Contractor shall place special emphasis on ease of facility operations and maintenance, when determining necessary valve and appropriate valve operator location and type

Control valve size and characteristics shall be selected such that the design required Cv or Cg is 70 to 85% of the valve's rated (100% open) Cv or Cg for the specified design operating conditions At the minimum flow conditions, the valve position shall be a minimum of 10% open, so that the valve seat and plug shall not be susceptible to damage (wire draw, etc)

Valves 65 mm and larger shall be designed so that it shall be possible to replace all packing rings with the operator and yoke in place

Weld connections for steel valves 65 mm and larger in nominal size shall be butt welded Weld connections for steel valves 50 mm and smaller in nominal size shall be socket-welded Welding end preparation shall be in accordance with ANSI B31 1 and ASME BPVC Section 1

Valves shall be provided with appropriate operators Manual gear operators shall be provided for isolation valves 250 mm and larger and shall be geared type, consisting of a worm gear and worm in a totally enclosed, grease packed and sealed gear case The gear shall be of the self-locking type to hold a fixed position Gear operators shall have provision for operation with portable air wrenches Manual operators shall require an input force of no more than 27 Kg to develop the required operating torque A mechanical type position indicator shall be integrally mounted on each manual gear operator Electric motor operated valves are to be provided where specified by the Engineer

Operators shall transmit the torque required to seat or unseat the valve against the maximum differential pressure

Gate valves and globe valves shall be equipped with renewable, integral type hard faced seats Seating surfaces of plugs and discs shall be hard faced Gate and globe valves shall be arranged for back seating, with surfaces hard faced, to permit repacking under full line pressure with the valve open

A detailed valve specification list shall be submitted for the Employer's review The valve list shall specify the material for all valve components and accessories for all piping classifications

Valves shall be legibly marked in accordance with MSS SP-25 Each valve shall have a durable metal tag attached to the valve yoke by stainless steel wire, or riveted strap, indicating tag number

Valves shall be tested to comply with the applicable section of ANSI B16 34 Valves shall receive a thorough drying with clean, oil-free compressed air immediately after testing

8 21 5 Insulation

Contractor shall insulate mechanical equipment, tanks, vessels, piping, fittings, valves and other in-line piping appurtenances as required for thermal conservation, personnel protection or anti-sweat purposes

The insulation shall form a system of prefabricated units, engineered as integrated assemblies to fit the surfaces to be insulated with due allowance for pipe supports, thermal expansion, contraction and equipment deflection

The insulation for piping systems shall be of the molded sectional or segmental type Block type will not be allowed, except where sectional or segmental forms are not available as a manufacturer's standard

Piping, welding fittings, flanged fittings, bodies of valves and the entire surface of screwed fittings shall be covered with insulation similar to adjacent pipe insulation The insulation shall be carefully cut to fit and firmly wired in place, and all voids filled with insulating cement

Valves shall be insulated up to and including the bonnet, but not the bonnet joints At all temperature measurement locations, the thermowell installed in the process line shall extend beyond the outer face of the insulation

Hot lines (design temperature greater than 60°C that are not insulated throughout their entirety, such as miscellaneous drains, vents, etc , shall be insulated for personnel protection for a distance of 2 1 meters whenever they pass through a platform, floor or near stairs At no place should a heated line be left uninsulated where personnel may come in contact with it during normal plant operation and maintenance

Contractor shall provide suitable means of supporting insulation on vertical pipe runs and flat surfaces to prevent sagging and opening

Insulation shall be continuous through floors, walls, pipe supports, anchors, guides and hangers At steel plates, hanger rods, stiffeners or other interruptions in the insulation, the insulation shall be sealed with insulating cement and the jacketing for outdoor insulation shall be flashed and sealed to provide a waterproof jacketing

Where operating temperatures make it necessary, Contractor shall provide suitable expansion joints in the insulating materials

The primary insulation for piping systems and equipment, with operating temperatures up to 650°C, shall be asbestos-free calcium silicate, conforming to ASTM C533

The alternative insulation, for indoor piping systems under 205°C, may be fiberglass-preformed insulation or mineral wool insulation, conforming to ASTM C547

Anti-sweat insulation material shall be fiberglass or foamglass

Insulation jacketing may be aluminum or stainless steel sheet, depending on cost and availability

Insulation shall be applied after pipe or equipment has been hydrostatically tested, painted and proved operationally sound

8 21 6 Lifting and Handling Systems

Contractor shall design, furnish and permanently install lifting and handling systems as required to service major equipment that require maintenance

Contractor shall supply an overhead traveling crane and appurtenances to service the CT/ST area

The overhead crane shall be sized to lift the largest item of equipment or component that is expected to require maintenance The overhead crane shall be equipped with a 5 tonne capacity auxiliary hoist in addition to the primary full capacity hoist

In addition to the above main overhead traveling crane, Contractor shall provide specific lifting and handling capability for components requiring maintenance/replacement, when the lifts are heavier than can be made by personnel without mechanical assistance

Built-in structures and devices should be provided for lifts that are made on a frequent basis Built-in structures coupled with standard lifting gear (e g , chain fall, etc) should be provided for less frequent lifts or relatively light loads For very infrequent lifts, the devices may be completely portable (e g , traveling gantry, truck mounted "cherry-picker", etc)

Use of building structure as an anchor point for lifting devices is acceptable only if such application is duly considered in design calculations

Mechanical design for overhead traveling crane shall conform to all the requirements and recommendations of CMAA 70 Crane shall operate under pendant pushbutton control

Brakes shall conform to Section 2-1 0 of ANSI B30 2 Brakes for stopping motion shall be of sufficient size to stop the trolley or bridge within a distance, in meters, equal to 10 percent of full load speed, in meters per minute, when traveling at full speed with full load Hoist holding brakes shall have a torque rating of not less than 125 percent of maximum hoisting torque developable at the point where the brake is applied The hoist brake shall set automatically and hold the load upon loss of power to the hoist motor

8 21 7 Emergency Shower and Eye Wash Stations

Contractor shall furnish emergency shower and eye wash stations near all chemical handling areas and battery storage areas These shall be of the hands-free design with buried drains for freeze protection

8 22 Painting

Except as otherwise specified, all equipment and uninsulated piping shall receive its manufacturer's standard shop finish

The HRSG shall be shop-primed with a zinc-rich primer, and shall be touched up after installation to a level equivalent to the shop-applied finish Outdoor, uninsulated tanks, piping, the HRSG exhaust duct, and the HRSG exhaust stacks shall be primed with zinc-rich primer and finish painted with a compatible industrial grade acrylic finish paint Finish colors shall be selected from among the paint manufacturer's standard colors, subject to the Employer's review and approval

Concrete surfaces, paving, curbs and sumps in chemicals handling areas shall be painted with an appropriate resistant coating system Acid-proof bricking shall not be used except by specific Engineering requirements

8 23 Lubrication

The types of lubrication specified for the Plant equipment shall be suited to the operating conditions and shall comply with the recommendations of the equipment manufacturers

For the turbine generators and any other turbine auxiliary equipment, the initial charge of flushing oil for startup shall be provided by the equipment manufacturer Subsequently, such flushing oil shall be sampled and analyzed to determine whether it can also be used for normal operation or it must be replaced in accordance with the equipment supplier's recommendations

Rotating equipment shall be splash lubricated, force lubricated, or self-lubricated Oil cups shall be provided as necessary

Where automatic lubricators are attached to equipment, provisions for emergency hand lubrication shall also be specified

Lubrication filling and drain points shall be located in accessible locations and positions

Manual lubrication provisions shall be external to guards with machinery in motion

8 24 Mechanical Testing

Contractor shall provide all required testing of mechanical equipment and systems to ensure that all equipment and systems are operating satisfactorily and

in accordance with the requirements specified herein Testing shall include both shop and field tests Test reports shall be submitted to the Employer for review Tests shall include, but are not limited to, the following

- pressure testing of installed piping systems in accordance with ASME Section I and ANSI B31 1

- pressure testing of pressure vessels in accordance with ASME Section I, ASME Section VIII and API standards

- running performance tests for pumping equipment in accordance with the Hydraulic Institute Standards or API standards as applicable for the following major pumps

  (1) Boiler Feed Pumps
  (2) Condensate Pumps
  (3) Circulating Water Pumps
  (4) Closed Cooling Water Pumps
  (5) Fire Pumps

- non-destructive examination tests in accordance with ASME and ANSI Codes

Tests may be witnessed by the Owner, insurance or code inspector, or others upon request

A 100% radiographic examination of all weld joints shall be provided for the gas fuel lines Spot radiography of high energy steam piping shall be performed as required by the applicable codes

8 25 Turbine Steam By-Pass System

A turbine steam by-pass system with steam conditioning valves or pressure reducing valves with desuperheaters shall be provided to by-pass steam to the condenser during startup and shutdown modes and for turbine trip

8 26 Make-Up Water Supply System

Well water will be delivered to the site by existing well water pumps, storage tank and transfer pumps Contractor shall route the well water supply to the various CCGT plant uses

25

SECTION 9 0

ELECTRICAL TECHNICAL REQUIREMENTS

Section	Title	Page
9 1	Plant System Voltages	C9-1
9 2	General Requirements	C9-2
9 3	Main Generator and Exciter	C9-11
9 4	Auxiliary Power System	C9-16
9 5	Generator Bus	C9-18
9 6	Power Transformers	C9-21
9 7	Electrical System Protection	C9-26
9 8	Medium Voltage Switchgear and 400V Load Centers	C9-35
9 9	400 Volt AC Motor Control Centers	C9-39
9 10	Emergency Diesel Generator	C9-41
9 11	DC Power System	C9-44
9 12	Essential (UPS) AC System	C9-45
9 13	Motors	C9-47
9 14	Power, Control and Instrument Cables	C9-50
9 15	Motor Protection	C9-55
9 16	Conduit, Cable Trays, and Duct Banks	C9-57
9 17	Grounding System	C9-61
9 18	Cathodic Protection	C9-67

Section	Title	Page
9 19	Lightning Protection	C9-67
9 20	Plant Lighting	C9-68
9 21	Communication System	C9-72
9 22	Revenue Metering	C9-75
9 23	Welding Receptacles	C9-76
9 24	110 kV Substation	C9-77
9 25	Generator Circuit Breaker	C9-83

SECTION 9 0 - ELECTRICAL TECHNICAL REQUIREMENTS

9 1 Plant System Voltages

The nominal voltage levels shall be as follows

Substation	
- Rated maximum voltage	121 kV
- Output to Armenergo	110 kV, WYE, solidly grounded
- Startup power to plant	110 kV, WYE, solidly grounded
Generator terminal voltage	(Note 1) kV, WYE, high resistance neutral grounded (Voltage Range 10-18 kV, to be selected during detail design)
Medium voltage	6 3 kV low resistance grounded
Low voltage	400 volt, WYE, solidly grounded
Critical* Instrument power (UPS)	230 volt ac, grounded
Miscellaneous power for non-critical instrumentation and general use	400 volt, three-phase or single-phase, solidly grounded, 230 volt, single-phase, solidly grounded
Miscellaneous power for lighting, space heaters, receptacles	400 volt, three-phase, 4 wire or 230 volt single-phase, both solidly grounded
DC control	125 volt dc, ungrounded
DC power	250 volt dc, ungrounded

* Critical instruments are those required for continued plant operation and those that provide equipment protection

---

Note 1 Generator manufacturer to determine exact voltage in range of 10-18 kV

9 2 General Requirements

9 2 1 Armenergo System

9 2 1 1 Supply Variations

Armenergo's nominal system voltage can vary by + 10 percent and -5 percent, depending on the system operating requirements Monitoring and control of the transmission system voltage are carried out by Armenergo

Armenergo's voltage variations shall be accommodated by specifying the generator step-up transformer high voltage winding at 121 kV and generator voltage regulation of ± 5 percent

The voltage variations of the 110 kV startup power supply shall be accommodated by automatic/manual operation of the station service transformer on-load tap changer

Nominal system frequency is 50 Hertz Normal operating frequency may range between 49 Hertz and 51 5 Hertz Excursions beyond these frequency limits will require tripping of units with appropriate time delays

9 2 1 2 Fault Levels

The Armenergo system 110 kV fault levels at Yerevan power plant, for design purposes, will be as follows

Maximum ultimate phase fault	20 kA (rms sym)
Maximum ultimate ground fault	20 kA (rms sym)

Fault clearing time

Normal protection operation by plant circuit breaker	60 ms
Backup protection operation	100 ms
Breaker failure operation	160 ms

9 2 1 3 Insulation Levels

The insulation levels for Armenergo's 110 kV system are given below The system shall be designed as an air insulated substation extensive/modification to the existing switchyard as indicated on the conceptual drawing

Operating voltage kV (rms)	115
Maximum design voltage kV (rms)	121
Lightning impulse level kV	550
Power frequency withstand voltage, kV rms/min	260

9 2 1 4 Rated Currents

The rated currents (at 40°C ambient) for the 110 kV substation shall be as follows

Generator line and bay connections	1,200A
Startup line and bay connections	1,200 A
Busbars (Min)	3,000 A
Circuit breaker short-circuit breaking current	20 kA

9 2 2 Design Criteria

The design criteria for configuration, size and rating of components of the auxiliary power distribution system from the station service and excitation transformers low voltage terminals are as follows

a) A single event (either a planned or forced outage of a piece of equipment) shall not cause the loss of a generating unit, but may lead to reduced output of a unit There are a total of three (3) generating units, two driven by gas turbine and one driven by a steam turbine

b) For voltage levels 400 volts and above, except for the case of single-ended load centers, it shall be possible to safely transfer manually, or automatically as applicable, any switchgear power supply from one source to the alternate source, under normal operating conditions, without having to "black-out" the switchgear This should include the normal operating activities for switching power sources, and for off-loading transformers

c) Loss of a transformer (other than a generator step-up or excitation transformer) should not lead to an output reduction of the generating unit The failure of a station service transformer may cause the loss of the generating unit until such time as the faulty station service transformer is isolated and the unit can be restarted from the second station service transformer

d) Loss of a switchgear bus section normally fed either directly or indirectly from the station service transformer may incur a power output reduction no greater than 50 percent but shall not cause a total loss of the plant

9 2 2 1 Overall System Description and Operation

The combined cycle plant (CCP) or station consists of two gas turbine driven generating units and one steam turbine driven generating unit (total of three generating units) Two Station Service Transformers (SST's) shall be provided, each capable of supporting the total auxiliary load of the plant

The steam turbine is directly connected to its step-up transformer via isolated phase bus ducts (unit connected) Each of the gas turbine generator is provided with a true generator breaker in the connection between the generator and its associated step-up transformer Isolated phase bus ducts provides the connection between generator, generator circuit breaker and step-up transformer The station service transformer and isolation/excitation transformer are tapped off the isolated phase bus connecting the generator circuit breaker to the step-up transformer This configuration permits each GT generator to support plant auxiliary load partially or totally via its SST

During startup of a gas turbine, its generator will be isolated from the 110 kV system by means of its true generator circuit breaker The Step-up Transformer associated with the gas turbine will be energized from the 110 kV Utility grid via high voltage (110 kV) circuit breaker, which in turn will supply power to the Isolation /Excitation transformer (IET) and Station Service Transformer (SST) and to the medium voltage (MV) distribution system GT auxiliaries and combined cycle auxiliaries will be energized via MV distribution system

The GT generator will be started as a synchronous motor with a variable frequency drive (Static Starting Device also known as LCI) The GT set will be accelerated with the starting device until the turbine is ignited and self sustaining speed is reached The GT governor will take over and accelerate the GT set to synchronous speed The excitation system powered from the Excitation Transformer will raise the generator voltage Once the generator frequency and voltage are closely matched to Armenergo's system, the generator will be

synchronized to the grid across its true generator breaker Only one Static Start System is envision for the both gas turbines The plant distribution system allows the switching of this staring system to each GT

The steam turbine will be brought to the synchronous speed in a normal mode by receiving steam from the HRGS's Once the ST generator frequency and voltage are closely matched to Amenergo's system, the generator will be synchronized to the grid across the HV circuit breaker

In normal shutdown of the plant, the last GT unit will be ramp down to no load via its control system and then its true generator breaker will be open The GT auxiliaries and plant auxiliaries will remain energized through the step-up transformer and station service transformer

In case of a grid failure (loss of outside power) the steam turbine will be tripped and HV circuit breaker will be opened The HV circuit breaker associated with each gas turbine will be also be tripped, however, the gas turbine generators can continue providing power for island operation of the plant

In case of the total loss of AC power in the plant, the essential safe standby loads (shutdown) of the power plant and the administration facilities, as applicable, shall be supplied by a diesel generator

In the case of a fault within the zone of protection of a GT generator, the protective relaying shall isolate the generator by tripping its true generator breaker A fault within the zone of generator circuit breaker, the generator step-up transformer (GSUT), isolation/excitation transformer, or SST, the protective relaying shall isolate the unit by tripping the generator circuit breaker, associated 110 kV circuit breaker, excitation field breaker and medium voltage (6 3 kV) switchgear bus main breaker and fast transfer the auxiliary loads to the second SST by closing the appropriate tie breaker If the fault is within generator, generator circuit breaker, GSUT, I/ET or its isolated phase bus, the unit will be shut down until the proper repair work is performed In case of a failure of a SST, the transformer will be isolated and the unit will be brought back on the line at full capacity using the other GT unit SST as a backup to the faulted SST

In the case of a fault within the zone of protection of a ST generator, the GSUT or associated isolated phase bus, the protective relaying shall isolate the generator by tripping the associated HV circuit breaker The ST unit will be shut down until the proper repair work is performed

9 2 2 2 System Design and Studies

Systems within the plant's boundary shall be designed to meet the requirements of the project specifications and the applicable requirements of IEEE for electric power service systems for generating stations, unless otherwise indicated herein

System studies and calculations shall be provided to demonstrate the adequacy of the ac and dc distribution system design These studies shall include the following

- Voltage criteria for each voltage system consisting of voltage dips during motor starting, voltage regulation, and no load voltages Criteria shall be based on equipment ratings and capabilities The auxiliary electrical systems shall then be designed to maintain voltages within established ranges

- Short-circuit studies which model the auxiliary electrical system from the 110 kV substation buses down to the 400 volt motor control center buses All medium voltage motors, motors at load centers (SUSs), and motors 37 kW (50 HP) and above at MCCs, shall be modeled All other motors shall be grouped and loaded into the model System performance shall be optimized based on the voltage criteria listed above

  The interrupting capacities of the switchgear shall be determined in accordance with ANSI C37 010 for metal-clad switchgear and in accordance with NEMA ICS-3 for controllers

- Load flow models, with similar scope and detail as the short-circuit studies shall be utilized to determine voltage profiles at various buses under expected plant operating modes

- Grounding studies for the substation and plant connected together, in accordance with IEEE 665-1995 and IEEE 80, and based on the maximum contributions from Armenergo

- Insulation coordination studies for the 110 kV and generator voltage systems The studies shall be performed using the Bonneville Power Administration's Salford Alternate Transients Program (ATP), the Electromagnetic Transients Program (EMTP), Manitoba HVDC Research Center's (MHVDCC) PSCAD/EMTDC, or similar commercially available software

- Fast transfer study of auxiliary load

- Protective relay coordination studies and settings for voltage levels down through 400 volt SUSs (for relays furnished within the Contractor's scope)

- Motor starting studies for selected worst-case arrangements to determine the voltage dips, at each voltage level during motor starting, shall be done DC motor starting voltage drop studies shall be done for all dc motors

- Battery sizing calculations in accordance with IEEE 485 and dc system short-circuit calculations DC voltage drop studies shall be done for all dc motors and other dc loads

- The auxiliary electrical system shall be designed so that the 400 volt motor starter contactors do not drop out during motor starting at any voltage level Studies of bus voltages during startup and switchyard variations shall be conducted

- Cable sizing calculations shall be based on the requirements defined in Section 9

- Cathodic protection calculations in accordance with NACE International standards for items which require cathodic protection

- Lighting calculations for all areas

- Transformer loading and sizing calculations for each transformer

- Medium voltage motor surge studies shall be performed by the switchgear or motor controller supplier, or shall rely on the switchgear or motor controller manufacturer's recommendations

- UPS sizing calculations

- Emergency diesel generator (EDG) sizing calculations

9 2 2 3 Synchronizing

A synchronizing check relay shall be provided on every circuit breaker within the new power plant where there is a possibility of paralleling together two separate sources

One synchronizing system shall be provided for each generating unit

ST generator shall be designed to be synchronized with the 110 kV Armenergo grid, across its own associated 110 kV circuit breaker, located on the high side of the generator step-up transformer in the plant 110 kV substation

Each GT generator shall be designed to be synchronized with the Armenergo grid (110 kV), across its true generator circuit breaker, located on the low voltage side of the step-up transformer in the plant In emergency GT generator are capable of operating isolated from the grid (110 kV circuit breaker open), while supplying the plant auxiliaries Hence, the provisions shall also be made in the design such that the GT generator can be synchronized with the grid across its own HV circuit breaker when needed

When selected, each generator shall be automatically synchronized to the 110 kV system by an auto-synchronizing and separate independent synchronizing check relay Each generator shall also be capable of being manually synchronized to the 110 kV system at the power plant with a permissive signal provided by a separate synchronizing check relay The auto-synchronizing relay shall utilize two independent channels for speed and voltage matching For each generator two synchronizing check relays shall be installed to verify the correct operation of the synchronizing system One synchronizing check shall be in operation to supervise, without exception, automatic closure of the associated circuit breaker Equipment for auto-synchronizing shall include

- One automatic speed regulating device which shall provide control instruction to the governor of the turbine in order to bring the frequency of the generator in line with that of the system

- One automatic voltage matching device which shall provide control instruction to the generator voltage regulator to bring the generator voltage in line with the system voltage

- Two channels of synchronizing checking devices which shall check the synchronizing condition and initiate the closing command with breaker closure time compensation

- One selector switch for selection of synchronizing signal from Channel 1 (frequency) or Channel 2 (voltage), or Channels 1 and 2 in series

- One automatic synchronizing check relay

- Auxiliary relays and all accessories

Each generator's synchronizing system shall be provided with auxiliary contacts to allow recording of all failed synchronizing attempts in the plant DCS and digital fault recorder (DFR)

All 6 3 kV medium voltage auxiliary switchgear buses requiring synchronization shall be provided with completely separate devices from those used for synchronization of the generator

and high voltage circuit breakers The medium voltage bus synchronizing scheme shall be provided with automatic transfer capabilities to safely allow fast transfer, in-phase (synchronous) transfer, or residual voltage transfer

Where two switchgear buses are synchronized manually, the closing of the circuit breakers shall be interlocked using a synchronizing check relay The synchronizing check relay shall continuously monitor the voltages on either bus, and shall not require the use of any synchronizing switches The synchronizing check relay shall have two instantaneous undervoltage coils to allow for dead line and dead bus closing, as required, and shall have adjustble closing angle and time delay

The main and tie breakers of all double-ended 400 volt load center buses shall be equipped with synchronizing check relays These relays shall be rated for continuous energization and shall not require the use of any synchronizing switches

9 2 3 Primary Terminal Points

All work associated with interfaces between the power plant and Armenergo 110 kV facilities shall be provided by the Contractor, including all required support structures, equipment and systems Installation by Contractor shall include provision of power supplies, cabling, communication interfaces, marshaling boxes, high voltage CTs and VTs and necessary testing and commissioning supplies Final connections to Armenergo's system shall be performed by the Contractor under supervision of Armenergo

9 2 4 Electrical Systems and Equipment Controls

Electrical system breakers, including each 110 kV generator breaker and the 110 kV startup transformer breaker, shall be provided with hard-wired control devices from the electrical control panel located in the plant main control room Sufficient hard-wired controls, metering and indications, including a system "mimic" diagram, shall be provided on the electrical control panel to aid the operator The breakers shall also be controlled and monitored by the plant DCS system Control and monitoring of the balance of the auxiliary electrical distribution system breakers shall be by the plant DCS system

All alarms and additional metering, monitoring, recording, and indications, as required, shall be by the plant DCS systems as applicable Controls of electrically operated circuit breakers and starters serving motors and other process related systems or equipment, shall be by the plant DCS system as applicable

9 2 5 Miscellaneous Electrical Requirements

Space heaters for electrical and other equipment shall be rated at twice the operating voltage, with heater wattage sized as required to maintain the enclosure internal temperature above the dewpoint

All electrical equipment for outdoor locations shall be suitable for operation in an industrial environment

Unless otherwise indicated in the specific sections describing the various electrical equipment, and as applicable for the location, electrical equipment enclosures shall be NEMA 1 for indoor (nonhazardous) office areas and enclosed (i e , switchgear) rooms, NEMA 12 for indoor dry areas, NEMA 4 for indoor wet areas, NEMA 4 (NEMA 3R if NEMA 4 is not available) for outdoor (nonhazardous) areas, NEMA 4X for outdoor (nonhazardous) highly corrosive areas and NEMA 7 for hazardous areas

Enclosed gas compressor areas shall be classified to be hazardous locations in accordance with the requirements of NFPA 70

9 2 6 Codes and Standards

Engineering, component design, materials, construction and testing shall be in accordance with the following latest U S Codes and Standards Other Codes and Standards are acceptable as defined in Section 1 0 References to manufacturers, trade names and catalog types described herein are to establish a general level of quality Other equipment may be proposed for approval

- Anti-Friction Bearing Manufacturer's Associaton (AFBMA)
- American National Standards Institute (ANSI)
- National Electrical Manufacturers Association (NEMA)
- Institute of Electrical and Electronics Engineers (IEEE)
- National Fire Protection Association (NFPA)
- Underwriters Laboratories (UL)
- American Society for Testing and Materials (ASTM)
- American Society of Mechanical Engineers (ASME)
- Insulated Cable Engineers Association (ICEA)
- National Association of Corrosion Engineers (NACE)
- Association of Edison Illuminating Companies (AEIC)
- Diesel Engine Manufacturers Association (DEMA)
- Illuminating Engineering Society (IES)

9 3 Main Generator and Exciter

The following description is applicable to each of the three facility generators

9 3 1 Generator

The main generator shall be horizontal, fully enclosed, indoor type with water or hydrogen cooled stator, and hydrogen cooled rotor conductors Conductors for both stator (armature) and rotor (field) windings shall be made of copper and shall be insulated with Class F insulation Windings shall be insulated for the full rated voltage to ground, with no grading of insulation

The generator capability rating shall be based on carrying continuously, at rated voltage and frequency, the maximum output of the turbine Machine performance and temperature classifications/rises shall be designed in accordance with ANSI C50 13 standards Neither the rotor nor the stator shall exceed Class B temperature rises and observable total temperatures when the generator is operating at any power factor from 0 85 lagging to 0 95 leading, at the specified short circuit ratio, and at the specified inlet water temperature The generator shall be suitable for operating in parallel with similar generators, and other electrical generating units of different sizes and characteristics located on Armenergo's power grid

Generator line and neutral terminal bushings shall be provided with high accuracy current transformers (CTs) One set of three metering class CTs, and five sets of three relaying accuracy CTs, for a total of eighteen CTs per generator, shall be provided Terminal bushings designated for external phase connections shall be appropriately spaced to permit connections to self-cooled isolated-phase bus ducts which shall be designed to provide complete phase isolation directly up to the generator phase bushings The terminal studs shall be designed to accept flexible connections from the bus ducts The generator neutral terminals shall be connected together, and shall be mounted in an enclosure (isolated from line terminals) with provisions for single-phase bus connections to the neutral grounding transformer

The generator housing shall be provided with hydrogen cooler sections The coolers shall be of sectionalized design, with cooler tube sections accessible from the outside to permit cleaning without the loss of hydrogen pressure The coolers shall be designed under normal operating conditions with inlet cooling water at 41°C The coolers shall be sectionalized so that the generator shall be capable of delivering at least 66 percent of its rated capacity while at or below the generator temperature Class B insulation limits as specified in ANSI C50 13 , with one cooler section out of service If the stator is water-cooled, the stator coolers shall be

designed such that when one cooler is removed from service, the generator shall be capable of delivering at least 66% of its rated capacity

9 3 2 Exciter

The exciter shall be of the static excitation transformer type The static type exciter shall be furnished complete with ANSI rated excitation switchgear, regulator, manual control, and excitation transformer The exciter rating shall be determined in accordance with the equipment manufacturer's standards The static exciter shall have a response ratio of 3 6 p u minimum with a ceiling voltage of 200 percent minimum and shall be of the high initial response ratio type

The excitation transformer (E7) and/or isolation/excitation transformer (IET) shall be station class, either an outdoor, oil-filled type, or an indoor, dry-type (acceptable up to 4 MVA) The excitation transformer shall meet the requirements of ANSI C57 110 and C57 12 00 (for oil-filled type) or C57 12 01 (for dry-type), as applicable The transformer shall be able to withstand, mechanically and thermally, the level and duration of the available fault currents since it will have no primary interrupting device

The transformer shall be able to withstand the effects of harmonic currents associated with the connected excitation system and static start system A minimum of 20 percent extra spare capacity (kVA) shall be allowed to withstand the effects of harmonic currents The windings and conductors shall be made of copper, and the bushings (for oil-filled type) shall be porcelain The primary shall have a 150 kV BIL rating, and the secondary shall have either a 30 kV (for dry-type) or a 45 kV (for oil-filled) BIL rating The high voltage windings shall be connected in delta, and the low voltage winding connections shall be determined by the generator supplier If a high resistance or ungrounded type of system is used for the secondary windings, it shall be provided with a ground detection system with both local and DCS system alarms

If the transformer is dry-type, it shall be cast coil, rectifier duty, and shall be designed, constructed, and tested in accordance with ANSI standards Since the transformer shall be designed for the specific harmonic content inherent to the rectifier application, the transformer shall meet the applicable IEEE 519 requirements as they pertain to the transformer core and coil losses, and heating caused by harmonic loads The transformer shall have a temperature rise of 80°C (dry type) or 65°C (oil filled), and a minimum life expectancy of 20 years

The transformer shall be provided with the manufacturer's standard accessories The following shall also be included

- Embedded winding temperature RTDs, one in each phase, to provide signals for high temperature alarm monitoring in the plant DCS system

- Two sets of three high-voltage CTs The CT ratio shall be determined during detailed design

- Two sets of three low-voltage CTs The CT ratio shall be determined during detailed design

Fan motors associated with the excitation system shall be rated 380 volts ac Each motor shall have its own dedicated starter or controller, and shall be protected so that it will be automatically isolated in case of fault or failure, without impacting other excitation system equipment The failure of a single fan or rectifier bridge shall not reduce the unit output rating, and the condition shall be alarmed locally and remotely by the DCS system

The power rectifiers shall be air-cooled with fully filtered air Unless dictated otherwise by the excitation system manufacturer's standard design, the power rectifiers shall be arranged in a sufficient number of parallel paths so that the generator output is not reduced when 15 percent of the power rectifiers are out of service Each rectifier bridge shall be equipped with a five-pole disconnect switch to permit electrical isolation from both ac and dc circuits for maintenance when under full load, unless dictated otherwise by the excitation system manufacturer's standard design

9 3 2 1 Excitation System Control Equipment

All equipment and devices required for the monitoring, control, indication, operation, and protection of the excitation system and its components, shall be provided The control and protection devices shall be provided as an integral part of the exciter, and shall be controlled through the DCS operator's console via the turbine control system Equipment, devices, or functions to be furnished shall include, but shall not necessarily be limited to, the following

- One automatic voltage regulator

- One backup regulator, either automatic or manual type

- Automatic VAR or power factor control

- Reactive droop compensation

- Excitation limiters, both minimum and maximum

- Dual level volts/Hz protection

- Main field and exciter ground detection systems with local and DCS alarms

- Excitation system monitoring and supervisory control shall be hard-wired or data-linked to the DCS, to be finalized during detailed design Normal control of the generator excitation shall be initiated from the plant DCS and performed in the excitation control system

- Operator interface station for remote mounting, if available as part of the vendor's standard package

9 3 3 Static Start System

One common static start system will be shared between two gas turbines The static start system utilizes the generator as a starting motor (synchronous motor mode) for the gas turbine The components of the common static start system envisioned are listed below

Converter (AC to DC)
DC Link Reactor (If required)
Inverter (DC to adjustable frequency, adjustable voltage AC)
AC Reactor with fused contactor or fuses

The following components shall be provided independently for each gas turbine

Motorized Generator Disconnect Switch (In-line between AC reactor and feed to the generator stator)
Motorized Neutral Disconnect Switch (Isolates generator neutral from the ground during startup sequence)
Isolation/Excitation Transformer (power source to static start system and excitation system in either startups and running mode)

The converters and inverters shall be provided with sufficient thyristor (SCR) cells in series to N-1 operation (continued operation with one cell failed) The microprocessor based controls (single not redundant) shall be provided for performing functions as required to startup a gas turbine (e g firing logic, sequencing, acceleration ramps, field excitation during startup, diagnostics, etc) the converter, inverter and control system shall be assembled in a NEMA 1 enclosure for an indoor installation The cooling equipment (redundant fan minimum) and air filters as required by components in the assembly shall also be provided The Contractor shall include in his bid the required spares (control cards, SCR bridges, etc) for the common Static

Start System such that the repairs can be performed at the site and downtime is less than eight hours

The power distribution system shall be arranged such that the converter can receive power from either GT isolation transformer and send inverter output via AC Reactor module to either GT generator

9 3 4 Component Description

Design parameters of each generator/exciter system shall be as follows

Generator Power Factor	0 85 lagging to 0 95 leading
Speed	3000 rpm
Normal Frequency	50 Hz

Frequency Range

The generating unit shall be capable of operating within the following system frequency range parameters

Frequency Range	
>49 Hz ≤ 51 5 Hz	Continuous, no time limitation
>48 5 Hz ≤ 49 Hz	Up to 5 minutes per incident
≥47 5 Hz ≤ 48 5 Hz	Up to 5 seconds per incident, with a total accumulation of up to 20 minutes during the turbine lifetime

Terminal voltage	10-18 kV range
Voltage regulation tolerance	±5 percent
Hydrogen pressure	Manufacturer's standard design, but not exceeding 0 03 MPa
Short circuit ratio	≥ 0 50
Neutral ground	Resistance loaded single-phase neutral grounding transformer
Exciter	Manufacturer s design
Static Start System	Manufacturer's design

9 4 Auxiliary Power System

9 4 1 General Description

During normal operation, power for startup or shutdown of any unit shall be provided by the station service power transformers

Two station service transformers shall be provided, and each shall be capable of carrying the plant total auxiliary loads These transformers receive power from their associated GT generators or from the Armenergo 110 kV grid

One station service transformer shall serve as backup for the other station service transformer in case of failure or maintenance The secondary winding of each station service transformer shall be connected to an independent 6 3 kV switchgear bus using nonsegregated phase bus duct via main breaker The electrical distribution system shall then be fed radially from the above two 6 3 kV unit buses (See Key One-Line Diagram E0036) In general, bus interconnections shall be provided between medium voltage buses and low voltage buses of each generating unit, as shown on the preliminary Key One-Line Diagram E0036, to provide an alternate feed to the bus in case of loss of its normal feed

Fault current calculations shall be based on the maximum available per-unit contributions, and maximum system voltages Voltage regulation calculations shall be based on the minimum available per-unit contributions, and minimum system voltages Conductor impedances for the short circuit calculations shall be assumed to be zero, and the proper considerations and adjustments for the maximum X/R ratio at each fault location shall be included Positive tolerance to the transformer impedance shall be used for voltage calculations, negative tolerance shall be used for short circuit calculations

9 4 2 Voltage Regulation

The auxiliary power system shall be designed to maintain voltage levels for the electrical equipment, at the respective ratings, as closely as possible during all modes of operations All voltage variations on the distribution system shall be limited as follows

Under steady-state conditions, voltages at the motor terminals shall be maintained between the range of 90 percent (minimum) and 110 percent (maximum) of rated motor voltage Under all plant operating conditions, the steady-state voltages on any motor terminal shall not exceed 110 percent of its rated voltage

During starting of the largest motor, the minimum supply voltage at the motor terminal shall not be less than 80 percent of the rated motor voltage for medium voltage motors and not less than 90 percent of the rated motor voltage for low voltage motors Also, large low voltage motors connected to power circuit breakers in unit substations may need to be rated for 80 percent starting voltage as a result of system studies During motor starting, bus voltages shall be maintained such that all operating load requirements will be maintained with continuous supply (without dropout) to all required motors and equipment in the plant

9 4 3 Bus Voltage

The bus voltage ratings shall be selected so that they meet the voltage regulation criteria above Breakers and motor controllers connected to the buses shall have interrupting capacities that exceed (by 5 percent) the maximum available fault current calculated for that system

9 4 4 Bus Transfers

Automatic transfer shall be initiated for a plant 6 3 kV switchgear bus when the normal station service transformer (SST) power source is automatically interrupted (loss of source caused by a generator or power transformer lockout relay trip) Such a lockout relay trip may be the consequence of a scenario which does not involve an electrical short circuit The automatic bus transfer scheme shall initiate a fast transfer to energize that bus from the second station service transformer power source (standby alternate source) If the fast transfer attempt fails (becomes blocked), then the transfer scheme may initiate an in-phase (synchronous) transfer or allow a residual voltage type of transfer to occur Selective shedding of some nonessential switchgear buses may be necessary to ensure that a residual voltage type transfer will be successfully completed The transfer scheme for each unit shall be provided with a "Normal - No Automatic Transfer" selection, via the DCS operator's console, to permit or block transfers of the 6 3 kV switchgear buses An alarm shall be provided when the transfer scheme is not in the "Normal" position

An undervoltage condition (approximately 50 percent of normal voltage, or less) on any bus, after an appropriate time delay, shall trip all feeder breakers supplying motor loads from that bus Undervoltage relaying shall allow sufficient time to ensure that voltage dips due to momentary external faults do not trip motor loads

Manually initiated transfer of loads from the main control room DCS operator s console to and from the unit auxiliary transformer shall be synchronized transfers with momentary paralleling of the two power sources

The time that the power sources are paralleled shall be kept to a minimum because the short circuit interrupting capabilities of the switchgear breakers are exceeded during that time An alarm shall sound in the main control room during the time that any two transformers are connected in parallel

9 4 5 Support Drawings and Documents

Drawing No	Title
E0005	GT Generator Metering & Relaying One Line (Typical)
E-0006	ST Generator Metering & Relaying One Line
E0035	Overall One Line Diagram
E0036	Key One Line Diagram

9 5 Generator Bus

9 5 1 General

This section establishes the criteria for the electrical connections between the generator and its associated step-up transformer, unit auxiliary transformer, generator circuit breaker (as applicable), excitation transformer, generator voltage transformers, surge protection equipment, and generator neutral grounding equipment

9 5 2 System Design Description

9 5 2 1 Generator Bus

a) Isolated phase bus duct shall be used for the connections between the main generator and its associated step-up transformer with taps for the unit auxiliary transformer's high voltage terminals, generator circuit breaker (as applicable), the excitation transformer, and the generator voltage transformers and surge protection cubicles Isolated phase bus duct shall be rated 150 kV BIL for generator rated 15 kV and above and 110 kV BIL for the generator rated below 15 kV

   At rated load and 40°C ambient temperature, allowable temperature rise of bus conductors shall be 65°C, allowable temperature rise of bus enclosures shall be 40°C

b) The main generator buses shall be self-cooled, totally enclosed, continuous bus of minimum external magnetic flux design The continuous current rating shall be determined

based on the maximum generator current at five percent undervoltage and a five percent safety margin

c) Bus tap connections to the unit auxiliary transformer and excitation transformer shall be self-cooled, and the continuous current rating shall be determined from the full-load current (highest MVA rating) of the transformer times an overload factor of approximately 1 25, or from the minimum current rating required by the bus duct manufacturer to meet the required momentary rating of the taps, whichever is larger The momentary current rating of the unit auxiliary transformer and excitation transformer bus taps shall be determined assuming a three-phase bolted fault on the tap, with all power sources in service

d) The momentary current rating of the bus between the generator and the generator circuit breaker (if provided), and the step-up transformer shall be determined by assuming a three-phase bolted fault at the generator terminals or on the low voltage side of the step-up transformer, whichever is larger Calculation of faults on the generator side of the transformer shall be based on using zero system impedance on the high side of the step-up transformer, and with the generator unit on line

e) The momentary current rating of the voltage transformer and surge protection cubicles bus taps shall be determined by assuming a three-phase bolted fault on the taps Calculation of tap faults shall be based on the use of zero system impedance on the high side of the step-up transformer, and with the generator unit on line

f) Outdoor bus duct design shall be such that the removal of a transformer requires minimum disassembly of the isolated phase bus, without involving bus duct welded sections Foundations shall be designed to limit differential settling Supporting structures shall be steel, hot - dipped galvanized after fabrication or structural aluminum

g) The isolated phase bus duct system fault current rating shall include approximately 5 percent safety margin

h) The isolated phase bus duct system rating shall take into account the effect of solar insolation and the outdoor buses shall be derated in accordance with the requirements of ANSI C37 24 where exposed to solar radiation

i) Bus enclosures shall be of continuous design dust-tight and drip-proof for indoor service and weatherproof for outdoor service Removable gasketed covers shall be provided for access to all insulators connectors, terminals, bushings and disconnect links for inspection maintenance and testing

A flexible joint shall be provided where the bus passes from generator support to building support Provisions shall be made to accommodate vibration and temperature changes and to permit alignment Allowance for misalignment at transformers, maintaining fully weatherproof isolated-phase metal enclosure, shall be at least 25mm (one inch) in any direction Enclosures shall have metal expansion bellow or equivalent means to allow for temperature changes and vibration

j) Seal-off bushings, or other acceptable air-tight barriers, shall be provided to prevent flow of air between equipment or between bus sections exposed to wide differences in temperature

k) A non-magnetic wall plate and frame together with non-magnetic framing members shall be provided for Turbine Building wall penetrations The penetrations shall be of weatherproof design and shall have a fire rating equivalent to the fire rating of the adjacent wall (two hours)

9 5 2 2 Ancillary Equipment

a) A generator neutral grounding transformer and grounding resistor shall be provided and shall be located in a single metal cubicle and connected to the generator neutral bus by bus duct Grounding transformer shall be single phase, dry type distribution class Resistor shall be stainless steel, grid type Since no current normally flows between the generator neutral bus to the generator neutral grounding transformer, the neutral bus duct continuous current rating shall be at least equal to the current rating that will support the sizing (rating) of the grounding resistor The voltage and insulation ratings of the neutral bus duct shall be the same as the main bus duct

The grounding equipment shall be in accordance with ANSI C37 101 and sized to limit

- Overvoltages during arcing ground faults, and
- Ground fault currents to values which significantly limit damage at the point of fault

The generator shall be instantaneously tripped on a ground fault

b) Disconnecting means shall be provided at power transformers and at generator line terminals to permit dielectric testing of these equipment, or to remove a unit auxiliary transformer from service, if required

c) A ground bus capable of carrying the rated momentary current shall be provided either as a separate conductor or by using one of the phase enclosures

d) Two sets per phase of wye-wye connected voltage transformers with current limiting fuses in primary windings and standard fuses in secondary windings shall be provided for protective relaying, metering and control These voltage transformers shall be located in the generator voltage transformer and surge protection cubicles The voltage transformers shall be wye-wye connected with high voltage winding neutral grounded and one of the phase leads grounded on the low voltage windings, and normally operated on phase-to-neutral voltage The high side of these voltage transformers shall be rated phase to phase

e) If a true generator circuit breaker (GCB) is included, then a voltage transformer with double secondary shall be provided per phase on the bus connecting GCB to its step-up transformer The voltage transformers primary winding shall be provided with a current limiting fuse and shall be connected in a wye configuration One of the secondary windings shall be provided with standard fuses and connected in the wye to provide monitoring and control functions The remaining secondary windings shall be connected in a broken delta configuration to detect an inadvertent ground on any equipment connected to the primary side of the voltage transformers

f) Generator surge protection capacitors and lightning arresters shall be provided, wired phase-to-neutral, and located in the generator voltage transformer and surge protection cubicles

9 6 Power Transformers

9 6 1 General

All transformers shall be suitable for outdoor mountainous environment

Each generator step-up transformers shall be directly connected to Yerevan 110 kV substation through dedicated independent 110 kV breakers

9 6 2 System Design Description

9 6 2 1 Generator Step-up Transformer

Each generator step-up transformer (GSU) shall be a single tank three-phase two winding unit OA/FA/FOA (ONAN/ONAF/OFAF) cooled, with a 65°C (149°F) rating

Each step-up transformer capacity shall be selected on the basis of delivering to the high voltage system at top FOA rating 65°C rise, the rated generator output less the step-up transformer losses

The low voltage rating of the step-up transformer shall be 10-18 kV the same as the generator output voltage The high voltage rating shall be 121 kV nominal with a manually operated no-load tap changer, consisting of two 2 50T fully rated taps above and two 2 50% fully rated taps below transformer primary rated voltage

The low voltage winding shall be delta connected, and the high voltage winding shall be wye connected, solidly grounded

The transformer impedance shall be approximately 13 3% nominal on the top FOA rated MVA base Impedance variation shall be specified to be constant over the tap range

The high voltage winding shall have an insulation with a minimum BIL of 550 kV at the line end The insulation shall be graded to a 150 kV BIL rating at the neutral end, to be confirmed through the use of the insulation coordination study The neutral end shall be brought out through a bushing rated at minimum 150 kV BIL and connected to the station grounding grid

The low voltage winding shall have minimum of 150 kV BIL insulation and shall be supplied with minimum 150 kV BIL bushings for winding rated 15 kV and above

The voltage winding shall have minimum of 110 kV BIL insulation and shall be supplied with minimum 110 kV BIL bushings for windings rated below 15 kV

Four 33-1/3% capacity cooling oil pumps and one spare fan in each radiator cooling fan block shall be provided on the transformer

The transformer shall meet the requirements of ANSI C57 12 00 and C57 116

9 6 2 2 Station Service Transformer

Each Station Service Transformer (SST) shall be a single tank, three-phase, two-winding OA/FA/ONAN/ONAF cooled unit with a 65° C rating

Each transformer shall be sized such that the auxiliary load of the plant (plus 5 percent for load growth) is no greater than 25 percent above the OA rating of the transformer high voltage winding

Primary voltage shall be 0 975 per unit of the generator terminal nameplate voltage Secondary voltage shall be 6 3 kV nominal for each winding UAT shall be capable of operating at 10 percent overvoltage continuously

The design impedance of the transformer shall be selected to optimize the electrical system The impedance shall be large enough to limit the interrupting duty on the switchgear to within approximately 90 percent of its rating, and small enough to ensure that when the largest motor is started, the voltage at its terminals does not fall below 80 percent of its rated voltage The entire plant normal operating load, except for the motor to be started, shall be assumed to be running, and the utility system voltage shall be assumed to be normal As manufactured impedance tolerance will be ± 7 5 percent for the two winding transformer The voltage profile of the plant under full load conditions shall be in accordance with subsection 9 4 2 2, Voltage Regulation

Each SST shall be equipped with automatic/manual on-load tap changing equipment, with twenty-one full capacity tap positions either on the high voltage side or on the low voltage side It is anticipated that this will consist of six 1 percent above nominal voltage rating, and fourteen 1 percent below nominal voltage rating However, the actual tap voltages required shall be determined during detailed design Impedance variation shall be constant over the tap range

Load-tap changing (LTC) equipment shall consist of vacuum or liquid-immersed tap switches, or a tap selector and an arcing switch, a motor-driven mechanism, and the necessary control devices, LTC utilizing liquid-immersed devices shall be provided with a separate oil-filled compartment for each of these components to isolate them from each other and from the oil in the main transformer tank The transfer switch compartment of the LTC shall be furnished with a pressure relief device, oil level indicator, a breather to vent switching gases, and a drain valve Manholes at the top of the LTC diverter section shall be provided for inspection The use of a booster or series transformer in the LTC circuitry is not acceptable Suppliers of the LTC shall be Reinhausen or Jansen, or approved equal

The SST primary windings and bushings shall be rated 150 kV BIL for windings rated 15 kV and above The UAT primary windings and bushings shall be rated 110 kV BIL for windings rated below 15 kV The secondary windings and bushings shall be rated 95 kV BIL

The high voltage winding shall be delta connected and each low voltage winding shall be wye connected

The low voltage winding neutral shall be grounded through a resistor to limit ground fault current to a value required for relaying (600A-1200A)

The transformer shall meet the requirements of ANSI C57 12 00 and C57 116

The primary voltage will be 110 kV, and the secondary voltage shall be 6 3 kV nominal

The design impedance of the transformer shall be selected to optimize the electrical system The impedance shall be large enough to limit the interrupting duty on the switchgear to within approximately 90 percent of its rating, and small enough to ensure that when the largest motor is started, the voltage at its terminals does not fall below 80 percent of its rated voltage The entire plant normal operating load, except for the motor to be started, shall be assumed to be running, and the system voltage shall be assumed to be at the minimum level As manufactured impedance tolerance will be $\pm$ 7 5 percent for the two winding transformer The voltage profile of the plant under full-load conditions shall be in accordance with Subsection 9 4 3, Voltage Regulation

The SUT shall be equipped with automatic/manual on-load tap changing equipment, with twenty-one full capacity tap positions on the high voltage side It is anticipated that this will consist of ten 1 percent above the nominal voltage rating, and ten 1 percent below nominal voltage rating However, the actual tap voltages required shall be determined during detailed design Impedance variation shall be constant over the tap range

The high voltage winding shall have graded insulation from 550 kV BIL at line end, to 150 kV BIL at neutral end The transformer shall be provided with 550 kV BIL line bushings The high voltage neutral end shall be brought out through a 150 kV BIL bushing and connected to the station ground grid through a surge arrester The low voltage windings and bushings shall have 95 kV BIL The low voltage neutral end shall be brought out through a 95 kV BIL bushing and connected to the ground grid through a resistor to limit ground fault current to a value required for relaying

A buried delta connected tertiary winding with capability to withstand any possible fault condition at the transformer shall be provided One current transformer in the delta tertiary winding shall be provided to detect any abnormality

Load-tap changing (LTC) equipment shall consist of vacuum or liquid-immersed tap switches or a tap selector and an arcing switch, a motor- driven mechanism ,and the necessary control devices LTC utilizing liquid-immersed devices shall be provided with a separate oil-filled compartment for each of these components to isolate them from each other and from the oil in the main transformer tank The transfer switch compartment of the LTC shall be furnished with a pressure relief device, oil level indicator, a breather to vent switching gases, and a drain valve Manholes at the top of the LTC diverter section shall be provided for inspection The

use of a booster or series transformer in the LTC circuitry is not acceptable Suppliers of the LTC shall be Reinhausen or Jansen, or approved equal

The LTC control cabinet shall be equipped with a Local -Remote selector switch to provide local manual control in the "Local" position and remote manual or automatic control in the " Remote " position Electrical end-limit switches shall be part of the motor drive and not part of the local position indicator Failure of the limit switches or other electrical controls shall not result in mechanical damage to the LTC apparatus The load -tap changer control cabinet shall be equipped with two redundant water seals at the entrance of the LTC control shaft if available from the LTC manufacturer The load-tap changer control cabinet doors shall also have water-tight gaskets

The automatic tap-changer device shall maintain the voltage of the medium voltage system constant within preselected limits The location of the transformer automatic voltage regulator (AVR) unit shall be determined during detailed design

An "INCON" load tap changer position indicator shall be provided for the transformer, with its remote indicator unit to be installed in the Plant Control Room on the electrical control panel, accessible to the operator

9 6 3 Common Requirements for all Transformers

Lifting eyes or lugs shall be provided for lifting the core and coils The transformer coils shall be copper wound

Two 400 volt AC, three-phase auxiliary power sources shall be provided for each transformer auxiliary load with automatic transfer (no fault transfer) in the event of loss of the normal supply

Lightning arresters (MOV type) shall be located on each of the GSU transformers tank or on separate steel pedestals as required by design The arrester rating shall be sized for 121 kV system voltage (maximum), and shall be selected to provide adequate protection with an approximate 20 percent safety margin between the transformer insulation withstand voltage capability and maximum expected surge voltage from lightning strike and/or switching surge

voltages superimposed on power frequency voltage in accordance with the applicable IEEE standards

Bushing current transformers shall be provided for all transformers as required by relay protection and metering schemes

All Routine and Other tests identified in ANSI C57 12 00 shall be peformed on all transformers, except the front-of-wave impulse, switching surge, and short-circuit capability tests are not required

Each transformer (GSU and SST) shall be provided with an incipient fault monitor, Hydran Type 201 Ti, having an isolated 4-20 mA output suitable for the plant DCS

9 7 Electrical System Protection

9 7 1 General

The protective scheme shall be set up such that it shall quickly clear a fault within its zone of protection, and provide backup protection for the adjacent equipment

- The protective devices shall be selected as to minimize the impact of a fault on the Armenergo system, and on the plant They shall provide prevention or limitation of damage to electrical equipment by selective tripping of the affected equipment They shall also provide alarm notification to operators of abnormal conditions enhancing service continuity and personnel protection Control room alarms shall be supplemented with local indication (such as indicating lights) to provide identification of each alarm source to enhance response time, and personnel safety

- The protective relaying system shall be powered exclusively from a secure dc system (125 VDC) Similarly, the energy source for trip releases, either switchgear or control equipment (except 6 3 kV and 400 volt motor control centers and below, and in areas where dc power is unavailable), shall be the dc system DC releases shall operate down to at least 70 percent of the nominal dc supply voltage

- The generator, GSU, SST and excitation transformers protective relays and systems for all units shall be installed in plant control room or an air-conditioned electrical room as applicable A digital fault recorder for the plant shall be installed in the plant control room

- Unless otherwise noted, each item of the plant's electrical system shall be provided with backup protection that is responsive to reasonably expected faults to allow isolation of the faulted item in a timely manner, in order to minimize damage This may or may not be a separate relay, and may form part of transformer or feeder protection (overcurrent, ground fault), where applicable

- The relay protection system design, protection settings and equipment application shall be subject to approval by Employer

9 7 2 Design Criteria

9 7 2 1 Generators

Each generator shall be protected from both external and internal disturbances Protection from internal faults constitutes the primary protection and shall include the following

Device No	Protection
64GP	Stator ground fault relay for protection against a single-phase to ground fault
87G	Generator differential
87OA	Generator and transformers overall differential
60G	Voltage balance for internal faults when voltage transformer (VT) fuses are used Voltage balance relay shall inhibit tripping of voltage dependent relays (i e , 21 and 40) for a blown VT fuse connected to these relays A blown VT fuse condition shall be alarmed in the control room It shall also transfer the excitation system from automatic to manual control whenever the generator VT associated with the excitation system experiences a blown fuse

Protection from external faults constitutes the backup protection and shall include the following

Device No	Protection
64GB	Stator ground fault backup relay for protection against ground faults when machine is off-line The relay shall be able to sense ground faults at frequencies below 50 hertz and shall be interlocked with the generator breakers that tie it to the system
59G	Overvoltage
21G	Impedance
46	Negative sequence to comply with ANSI C50 13

40-1, 40-2 Loss of excitation

The excitation system shall be provided with the manufacturer's standard control, protection and monitoring scheme The generator shall also be provided with reverse power protection (32) using two 3-phase type, independent, definite time-lag relays

Protection of the generator shall include protection against inadvertent energization from the utility system when at standstill or during startup prior to synchronizing

Out-of-step protection (78) shall be provided for loss of synchronism from the utility system

The generator and its prime mover shall be protected from over- and under-frequency operation in accordance with ANSI C37 106 and meeting the requirements of Section 9 3 3 (frequency range)

Generator protection shall consider the following

1) The ground fault protection shall protect the generator during both on-line and off-line operation

2) Differential protection shall not operate for magnetizing inrush currents or for through flows to external faults with worst-case symmetrical current conditions

3) Separate lockout relays shall be used for primary, back-up and breaker failure relay systems

4) Interlocks associated with high voltage generator circuit breaker failure scheme shall be used as applicable

5) Criteria for the initiation of either generator or turbine trip, as a consequence of the actuation of the generator protective relays, shall be based on the turbine generator manufacturer's recommendations

6) The various tripping methods, such as "simultaneous trip," "sequential trip," etc , shall be given proper consideration and shall be appropriately applied

9 7 2 2 Power Transformers

Protection for all power transformers shall meet the applicable guidelines of ANSI C37 91 As a minimum, the following protection shall be provided for each of these transformers

1) Sudden pressure relay (63)

2) An alarm system (including sensors and devices), shall be provided for winding hot spot, high oil temperature, low oil level, cooling equipment power loss, low voltage for cooling equipment, cooling equipment power automatic no-fault transfer from the normal source to the standby source, gas detector relay operation, and pressure relief device operation, as applicable Annunciator shall be provided in local transformer control cabinets as well as contacts for remote DCS alarms

3) The transformer fire detection and protection shall be actuated either manually or automatically, and the transformer shall be de-energized simultaneously through the transformer lockout relays Any transformer lockout relay trip shall also trip the transformer cooling fans and pumps

4) Phase instantaneous and time overcurrent protection (50/51) on the high voltage terminals of the transformer This protection shall coordinate with the thermal capability of the transformer, as well as with the time overcurrent protection provided at the downstream breakers The instantaneous overcurrent relaying shall trip for high magnitude fault contributions from the transmission system to faults in the transformer

5) If the transformer is nitrogen sealed, it shall be provided with sensors to provide gas high-/low pressure alarms and gas cylinder low pressure alarms

Specific protection requirements for Generator Step-up and Station Service transformers are listed below

a Generator Step-up Transformer (GSUT)

1) Phase differential protection, (87) The zone of protection shall include the associated generator 110 kV SF_6 switchyard breaker

2) Ground overcurrent relaying (51N) in the neutral of the 110 kV winding This relaying shall coordinate with the neutral ground overcurrent protection provided at the switchyard

b Station Service Transformer (SST)

1) Phase differential protection (87) The zone of protection shall extend from the high voltage terminals of the SST to the CTs located at the unit 6 3 kV switchgear main incoming breakers

2) Neutral ground overcurrent protection (51N) on the low voltage winding neutral leg This protection shall coordinate with the neutral ground time overcurrent protection provided at the unit medium voltage switchgear main incoming breakers

3) Phase overcurrent protection (50/51) on the high voltage windings

4) Three single-phase instantaneous overcurrent relays (50), on the high voltage terminals of the transformer, as part of the unit (step-up transformer and generator) overall differential scheme shall be provided

5) An "INCON" Load Tap Changer Position Indicator shall be provided on the transformer with its remote indicator unit installed in the plant control room on the electrical control panel and shall be directly accessible to the plant operator's view

9 7 2 3 Medium Voltage (6 3 kV) Distribution System

1) The incoming feeders (main breakers and tie/reserve breakers from the SST) to the unit 6 3 kV switchgear buses shall be provided with very inverse time phase overcurrent protection (51), and ground time overcurrent protection (51G) using zero sequence sensor (rectangular type) current connections

   Settings for the phase time overcurrent relays shall be coordinated with the respective 50/51 relays provided on the high voltage side of the SST's to ensure selective tripping and backup protection

   Ground time overcurrent protection shall be provided with the time overcurrent relay 51G using zero sequence sensor (rectangular type) current connections The 51G relay shall be set to coordinate with the ground fault protection provided on the low voltage winding neutral legs of the SST

   In addition, these Device 51 and 51G relays for the main and reserve breakers shall in turn be set to coordinate with the protection provided on the feeder circuits to the 400 volt load centers, to subfed 6 3 kV switchgear, and with the protection provided for the motors

2) Feeders to load center transformers and to isolation transformers associated with variable speed drives (if used) shall be provided with very inverse time phase overcurrent relays (51) with instantaneous elements (50) Application of these relays shall ensure coordination and selectivity in accordance with IEEE 242 In addition, these feeders shall be provided with zero sequence ground fault current protection with instantaneous elements (50G) The zero sequence CT associated with a given feeder will encircle all three phases of the outgoing feeder cable(s) and shall be located at the switchgear

3) Each unit 6 3 kV switchgear bus shall be provided with redundant (2/2) undervoltage relay protection Loss of an upstream auxiliary power supply (tripping of GSUT, SST, or excitation transformer) to a bus shall lead to tripping of the normal auxiliary power source main breakers, and shall initiate an automatic "fast", an in-phase (synchronous), or residual transfer to the alternate power source Necessary synch-check relays shall be provided to preclude the closure of out-of-phase power sources, either during manual or automatic bus transfers If both the normal and alternate ac sources are unavailable, the undervoltage relays shall initiate tripping of all motor loads within approximately 1 to 2 seconds time delay (the final time delay shall be determined during detailed design) to avoid overheating of the motors and to prevent connection of all the motor loads simultaneously upon return of the ac power source to the 6 3 kV bus

4) Motor protection for each motor below 1120 kW (1500 HP) shall be provided with solid-state, microprocessor based, Multilin 239 Motor Protection Relays Multilin SR469 Motor Management relays shall be used for motors 1120 kW (1500 HP) and above Multilin relays power supply shall be 240 volts ac, single-phase, 50 Hz, derived from a control power transformer and lockout feature with manual reset for tripping the associated breaker on any faults

5) To assure tripping on "high" current faults by protective relays which are connected to "low-ratio" CT's, two additional single-phase 2000/5 ratio CT's and associated instantaneous overcurrent relays shall be used for feeder protection, where required This special feeder protection shall be required anytime CT primary ratio times 20, for a given feeder breaker, is less than the prospective fault current at the terminals of the breaker

9 7 2 4 400V Distribution System

1) 6 3 kV/400 volt secondary unit substation (USS) transformers shall be provided with winding temperature detectors' contacts for DCS alarming Transformers which are not fan cooled shall be provided with a local temperature gauge with contacts Transformers which are fan cooled shall be provided with contacts from the transformer cooling control, and alarms

2) The 400 volt winding neutral of the unit substation transformers shall be solidly grounded

3) On detection of the loss of the upstream feeder breaker to the USS transformer, the normal power source (main) breaker to the USS that has lost its upstream feeder breaker shall be tripped and the associated bus shall be automatically "fast" transferred to the alternate power source via the automatic closure of the USS tie breaker, if the load center is designed as a double-ended USS

   A means to enable or disable (block) the automatic closure of the 400 volt SUS tie breakers shall be provided from the DCS operators console in the main control room A DCS alarm shall be generated any time a 400 volt USS tie breaker's auto-closure has been disabled

   Each 400 volt switchgear bus shall be provided with redundant (2/2) undervoltage protection

   The bus undervoltage relays (approximately 50% volt) shall initiate tripping of all motor loads within a time delay that shall be determined during detailed design

   Each double-ended USS shall be provided with synch-check relays, one for each of the main breakers, and one for the tie breaker

   In addition, for double-ended USS's a manual transfer scheme shall be provided with momentary paralleling and trip selection to select automatic tripping of the outgoing main breaker at the time of manual transfers

   An alarm shall sound whenever the two main breakers and the tie breaker of a double-ended 400 volt USS are closed This alarm is to alert the operator to realign the power sources to the USS by removing the paralleled transformer condition, because under this condition the short circuit capability of each main and tie breaker has been exceeded

4) The 400 volt secondary unit substation main and tie breakers shall be provided with solid-state trip (SST) devices with long-time (LT) and short-time (ST) trip elements, and shall be set to coordinate with each other The SST trip elements shall also coordinate with the transformer upstream 6 3 kV feeder breaker protection, and with the 400 volt USS feeder breakers, in accordance with IEEE 242 Automatic (fault) tripping of any main and tie breaker by the SST trip device shall maintain tripping and block closing of the associated breakers until manually reset by the operator, and provide a local indication and an alarm in the plant DCS

5) The criteria for the overcurrent protection of the load center motor feeders shall be

   - Protect supply cable and motor

   - Allow motor to start, accelerate, and reach normal speed

   Motor feeders shall be protected by a solid-state overcurrent device having LT and instantaneous (IT) characteristics

6) Each double-ended SUS shall be provided with disconnecting links at one end of the tie breaker for isolation The tie breaker and disconnecting link shall occupy separate adjacent vertical sections

7) The criteria for the overcurrent protection of MCC feeders from the load centers shall be

   - Protect supply cable and MCC bus

   - Avoid loss of MCC during motor inrush conditions

   - Avoid loss of MCC on LT trip during acceptable high load operation

   MCC feeders shall be protected by a solid-state overcurrent device having LT and ST characteristics

8) Motor feeders at 400 volt MCCs shall be provided with combination starters consisting of adjustable magnetic trip only breakers and a thermal overload relay in each phase of the starter Feeders other than motor feeders shall be protected by thermal magnetic breakers

9 7 2 5 Automatic Bus Transfer

An automatic bus transfer scheme shall be provided for each unit 6 3 kV switchgear voltage bus to transfer the medium voltage buses from the unit auxiliary power source to the alternate power source during the following events

- Actuation of any lockout relays associated with generator, generator step-up transformer, unit auxiliary and excitation transformers

The transfer scheme selected shall be similar to Beckwith Synchrotran system, and shall include "fast", in-phase (synchronous), or residual voltage transfer and shall ensure that the motors will not be subjected to excessive re-acceleration torques during the transfer

9 7 2 6 Digital Fault Recorder System (DFR)

One Digital Fault Recorder System, as manufactured by Hathaway Power Instrumentation, Type DFR IIB shall be provided for each unit It shall consist of 32 analog traces and 64 digital event marker traces

9 7 3 Component Description

Protective relays as indicated on Generator Metering and Relaying Drawings, this section and section 9 15 of this specfication, including the supporting facilities shall be provided

The acceptable manufacturers of these relays are ABB, Beckwith, Fuji, GE/Multilin, Alstom, Hitachi, and Mitsubishi, as applicable All relays shall be of the same manufacturer to the greatest extent possible State-of-the-art digital multi-function protection relays with proven utility experience shall be utilized throughout to the maximum extent

Test switches shall be provided for each lockout relay associated with generator and 6 3 kV systems On 6 3 kV systems where a single circuit breaker is normally tripped, test switches shall not be required Solid-state relays shall be provided with on-line self-diagnostic alarm capability whenever available A separate 125 volt dc power supply (same battery but separate dc distribution panelboards) shall be utilized for primary and backup relay schemes (the only exception being where dc power availability is impractical)

The Multilin microprocessor based relays, Types SR469 Motor Management Relays and 239 Motor Protection Relays, or approved equal, shall be utilized exclusively for motor protection at 6 3 kV switchgear, as described in Section 9 15 The specific style numbers and ranges

associated with the various relays shall be identified by the Contractor and verified by the relay coordination study to ensure their adequacy to perform their intended function

Digital multifunction meters shall be used, where applicable, and shall be Type DMMS 300 Plus, as manufactured by Electro Industries, or acceptable equal

9 8 Medium Voltage Switchgear and 400 V Load Centers

9 8 1 General

Motors 2612 kW (3501 HP) and above shall be fed from the unit 6 3 kV switchgear buses, and motors 191 kW (251 HP) through 2610 kW (3500 HP) shall be fed from 6 3 kV motor controllers section of switchgear buses Large 400 volt loads such as 90 kW (120 HP) through 190 kW (250 HP) motor loads, 100 kW through 400 kW nonmotor loads, and motor control centers, shall generally have their power supplied from 400 volt load centers Motors 190 kW (250 HP) may be fed from 6 3 kV switchgear, if required by the design of the installation

9 8 2 System Design Description

9 8 2 1 Medium Voltage Switchgear

The medium voltage 6 3 kV switchgear shall be provided meeting the requirements of ANSI C37 The motor controllers section of the 6 3 kV switchgear shall meet the requirements of NEMA ICS-3 Each 6 3 kV bus lineup shall be metal-clad switchgear rated 7 2 kV, 95 kV BIL Each 6 3 kV motor controllers section bus lineup shall be metal-clad switchgear (totally-enclosed and self-supporting units) rated 7 2 kV, 60 kV BIL The 6 3 kV motor controllers section shall utilize 7 2 kV Class E2 fused vacuum controllers for each motor feeder All medium voltage switchgear breakers shall be drawout type, electrically operated, stored energy vacuum circuit breaker type All medium voltage motor controllers shall be 3-pole, single throw, vacuum drawout type, and electrically held (motors shall trip on loss of voltage to coil circuit) All switchgear shall be from the same manufacturer The 6 3 kV switchgear shall be suitable for "simultaneous fast" transfer duty

Each 6 3 kV switchgear assembly shall consist of one or more vertical sections, each of which shall have a main bus compartment and two vertically stacked equipment cells ("two-high" type construction) The cells shall be arranged for circuit breakers, or auxiliary devices, or shall be blank as required

Each 6 3 kV motor controller assembly shall consist of a single high type construction with one or more vertical sections, each arranged for fused vacuum controllers or auxiliary devices or blank as required A back-to-back stacking arrangement shall not be utilized

Switchgear phase busbar material shall be insulated copper bar All joints shall have silver-to-silver contact surfaces with minimum contact resistance

An uninsulated copper ground bus shall be furnished through the entire length of each switchgear

Cubicle space heaters shall be provided and shall be controlled by an adjustable thermostat

Each motor controller shall be provided with a means for electrical connection to ground, such means shall have contact with the bare metal of the permanent portion of the switchgear cubicle

Each voltage transformer shall be provided with current limiting primary fuses and secondary fuses, mounted with primary fuses on a drawout type removable unit designed to isolate and ground the potential circuits when the unit is in the fully withdrawn position

The medium voltage switchgear shall be located in enclosed areas of the Turbine Building and possibly other areas in order to be as local as possible to the systems requiring power such as circulating water pumping structure electrical building, etc)

Non-segregated phase bus ducts shall be used for connections from Station Service Transformers to the switchgear

Nonsegregated phase bus duct shall be provided as a complete assembly of rigid supported insulated conductors housed in a 3-phase enclosure without barriers between the phase conductors The buses shall be copper with silver-plated joint connections

Local control at the switchgear, for the switchgear breakers or controllers, shall be provided for testing purpose only Normal operation for the switchgear breakers or controllers shall be remote operation from the DCS or PLC system as applicable

Contractor shall provide spare equipped feeder circuit breaker each rated 1200 amp and 2000 amp (total of two) and one 400A rated motor controller installed in the lineup

The test station shall operate from the same type of power supply (dc or ac) that controls the switchgear The test station per switchgear type (dc or ac controlled) shall be provided at each

area of the plant where such switchgear line-ups are located If required for DCS control interface, two interposing relays shall be provided inside the DCS I/O termination cabinets or at the switchgear, one for tripping function, and one for closing function Breaker closing shall occur only when the trip source is available

One draw-out type grounding device for each breaker rating (1200A, 2000A, etc) at 6 3 kV voltage levels shall be provided

Plant loads fed from the 6 3 kV system shall be split between the two switchgear buses, such that the loss of one bus results in 50 percent or less loss of the generating capacity

9 8 2 2 Low Voltage Load Centers (Secondary Unit Substations)

Indoor switchgear assemblies shall have NEMA 1 enclosures, and outdoor assemblies shall have NEMA 3R walk-in type weatherproof enclosures

Switchgear phase busbar material shall be copper bar All joints shall have silver-to-silver contact surfaces with minimum contact resistance

An uninsulated copper ground bus shall be furnished through the entire length of each switchgear

Cubicle space heaters shall be provided and shall be controlled by an adjustable thermostat

The power circuit breakers in metal enclosed cubicles shall be 3-pole, single-throw air circuit breakers of standard drawout type design

The interrupting rating of the switchgear shall be determined in accordance with ANSI C37 13

USSs shall be located in the Turbine Buildings, Electrical Building at cooling tower pump structure, or in other locations determined during detailed design where equipment loads require power from an associated USS USSs shall be located as close as practical to the loads

If required for DCS control interface, two interposing relays shall be provided inside the DCS I/O termination cabinets or at the USS, one for tripping function and one for closing function Breaker closing shall occur only when the breaker trip source is available

Automatic tripping by the solid state tripping device of any 400 volt breaker shall be indicated locally at the breaker solid state tripping device, and shall initiate an alarm in the plant DCS system

Double-ended USSs with 100 percent redundancy shall be supplied for each service area where the failure of a single 400 volt bus would cause loss or severe output reduction of a unit Other non-critical loads may be served by single-ended USSs or MCCs served by USS transformers

One spare outgoing feeder circuit breaker of each frame size used in an USS lineup shall be provided in the double-ended lineup, or single lineup, SUS Blank spaces shall be fully equipped to accept circuit breakers

Load centers shall be provided with 6 3 kV/400 volt, three-phase, 50 Hz dry-type transformers, with 95 kV BIL ratings for 6 3 kV primaries Transformers in double-ended lineups shall be sized to accommodate the normal operating loads (USS tie breaker open) at the AA rating of the transformers, and shall be capable of carrying at the FA rating, the additional operating loads transferred from their paired load center in the event of trouble or maintenance of the other transformer (USS tie breaker closed)

Transformer primary windings shall be delta connected and the secondary windings shall be wye connected, and the neutral shall be solidly grounded

USS transformers shall be equipped with manual no-load tap changers with four 2-1/2 percent full capacity taps on the high voltage side, two taps above and two taps below the nominal voltage rating

The USS transformers shall be ventilated dry-type with Class H 220°C VPI insulation system The high voltage and low voltage winding conductors shall be high conductivity copper and shall be fiberglass cloth, mylar, or Nomex tape wound The insulation system shall be nonexplosive, fire resistant, air insulated, and cooled by convection The high and low voltage windings insulation system shall be enhanced by two cycle vacuum pressure impregnation process of high temperature polyester varnish with final resin coating The design temperature shall be 40°C and allowable winding temperature rise shall be 115°C

An air insulated terminal chamber for high voltage connections, large enough to provide working space for field fabrication and containment of stress cones within the chamber, shall be provided as a gasketed enclosure mounted on the side on the transformer and furnished with bolted covers The dry-type transformers shall be closely coupled to the USSs

Each transformer serving double-ended USS's shall be provided with a complete forced-air cooling system, including winding temperature thermostatic controls, fan power supply transformer, circuit protective devices, and control panel Bussing shall be sized for the maximum FA rating Each transformer shall also be furnished with standard accessories including a dial or digital type winding hot spot temperature indicator

Transformers which are not fan cooled shall be provided with a local temperature gauge with contacts for DCS alarm Transformers which are fan cooled shall be provided with contacts from the transformer cooling control for DCS alarm

9 9 <u>400 Volt AC Motor Control Centers</u>

Motor control centers (MCCs) shall be designed and constructed for use on a 400 volt, 3 phase, 3 wire, 50 hertz, solidly grounded system The MCC equipment shall consist of vertical sections, deep joined together to form rigid, free standing, completely enclosed, dead front control assemblies Cable entries shall be sealed to prevent rodent entry

Enclosures for indoor MCC installations shall be type NEMA 1A-Gasketed Any outdoor MCCs shall be provided with type NEMA 12 enclosures installed within NEMA 3R non-walk-in type weatherproof housings, with a front and rear hinged door for easy access MCCs in outdoor locations shall be provided with a rain shield or cover for maintenance, which shall cover the top, front, and rear All equipment and devices for outdoor locations shall be designed for the environment

As much as possible, the motor control centers shall be distributed throughout the plant in close proximity to their associated electrical loads

Motor starters shall be full voltage (non-reversing or reversing as required), combination plug-in type units with molded case magnetic only trip circuit breakers, contactors, and thermal overload relays (all phases) Contactors used for heater loads shall not be equipped with overload relays Three-phase motor operated valves and damper operators shall be furnished with reversing starters built into the operator housing Ambient compensated thermal magnetic molded case circuit breakers located in the MCCs shall be used to feed motor operated valves and dampers The circuit breakers for feeder circuits shall be ambient compensated thermal magnetic molded case, single or double unit, plug-in or fixed type, based on the MCC manufacturer's standard design The rated continuous current carrying capacity of each starter contactor shall be as listed in NEMA ICS 2, for that size contactor Starters shall be NEMA ICS 2 size 1 or larger IEC starters rated for the application with a 12 amperes minimum rating shall be acceptable for the motor operated valves and damper operators

The circuit breaker shall have interrupting rating higher (preferably 10% higher) than the calculated maximum available short-circuit current on the source side of the circuit breaker All MCC circuit breakers shall have the same interrupting rating governed by the maximum required short circuit duty for ease of interchangeability

Manual circuit breaker operating handles shall be furnished on the access doors of starter units and feeder tap units to operate the circuit breakers Each operating handle shall indicate when the breaker has tripped Additionally, the access doors shall be interlocked with the operating handles to prevent opening the doors normally when the circuit breakers are in the closed position

Each starter/contactor unit shall be equipped with a control transformer, adequately sized to support the load The minimum control transformer size shall be 100 VA Both the primary leads and one secondary lead shall be fused, while the other secondary lead shall be grounded The contactor coil shall have a pick-up voltage of 85 percent or lower, and a drop-out voltage of approximately 60 to 65 percent of the rated voltage of the coil

The continuous current rating of each main MCC bus shall be sized as required for the maximum demand load on the bus, including approximately 10 percent unused spare capacity for future loads

MCC phase busbar material shall be copper or aluminum All joints shall have silver-to-silver contact surfaces

An uninsulated copper ground bus shall be furnished through the entire length of each motor control center

Each vertical section shall accommodate no more than six Size 1 or Size 2 combination magnetic starters All individual units shall be isolated from each other by barriers Vertical section space heaters shall be provided and shall be controlled by an adjustable thermostat

Each MCC shall be provided with approximately 20 percent spare starters and breakers

MCCs shall be in accordance with the applicable NEMA requirements for Class I, Type B MCCs

9 10 Emergency Diesel Generator

9 10 1 General

This section establishes the criteria for the emergency ac power system which shall consist of one emergency diesel generator set (EDG), and its associated essential service low voltage load centers and motor control centers, which shall supply power to the required auxiliaries of the unit to assure an orderly shutdown of the plant in the event of a total loss of station ac power

The EDG capacity expressed in kVA, shall be established by the Contractor

9 10 2 System Design Description

One EDG shall be provided, and shall be sized to supply the essential safe standby and shutdown loads of the plant when all other normal power sources fail The EDG shall consist of a diesel engine and generator of the single bearing, close coupled type of construction The generator shall meet the NEMA MG1 standard

The loads at the 400 volt essential service buses to be supplied by the EDG shall include the following, as applicable, and will be considered as a design guide

- Control Room Air Conditioning System
- Turbine turning gear (3 turbines)
- Turbine main bearing lube ac oil pump (3 turbines, interlocked selector switch)
- Vapor extractor from oil reservoirs
- Air seal oil pump (if applicable)
- 125 volt battery charger
- 250 volt battery charger
- Diesel generator battery charger
- Essential Service Ac Power System (UPS) alternate source transformer
- Control room emergency ac lighting (50% minimum)
- Diesel generator fuel oil pump (if required)
- Stack obstruction lighting
- Electronic room emergency ac lighting (20%)
- Switchgear rooms emergency ac lighting (20%)
- Electronic Equipment Conditioning System
- UPS area emergency ac lighting (10%)
- Plant communications
- Ten percent spare capacity

For the equipment listed above, only one-half of a redundant pair of equipment shall be powered from the 400 volt essential service buses

The EDG and its associated remote switchgear shall be designed for use on a 400 volt, 3-phase, 3 wire, 50 Hz wye connected, high resistance grounded system with a ground fault detection system and alarm to the plant DCS The generator shall have 2/3 pitched windings The EDG shall have a rated power factor of 0 80

The EDG shall be provided with the following protection

- Device 25 EG — Synchronizing relay package
- Device 27/59 EG — Undervoltage/overvoltage relay
- Device 32 EG — Reverse power relay
- Device 40 EG — Loss of field relay
- Device 51 VEG — Voltage-controlled, inverse time overcurrent relay, three single-phase relays, as required
- Device 24 EG — Overexcitation relay
- Device 86 EG — Auxiliary lockout relay, manually reset
- Device 87 EG — Generator differential relays
- Generator neutral ground detector and alarm package
- Generator RTDs, with quantity in accordance with manufacturer's standard, located in generator to provide signal to DCS
- Underfrequency alarm

The EDG shall be either an outdoor engine/generator system, an indoor engine/generator system, or a stand-alone package module in a weather-tight enclosure The EDG system shall be suitable for operation in a mountainous urban environment Adequate area for routine maintenance and accessibility to remove the major components for transportation shall be provided

The diesel generator set shall be complete with all the necessary equipment and devices required for a self-supporting, self-sufficient unit, including a diesel day tank, insulated muffler, fuel pumps, radiator, local control panel, starting system, battery, PTs, CTs, meters, etc , as applicable The Contractor shall establish the maximum duration of any single incident (or group of incidents) for which the EDG would be operated, and size the fuel storage tank accordingly

A location mode selector switch shall be provided on the diesel generator local control panel to permit the selection of either "local (EDG)" or "remote (control room)" modes of operation When this switch is in the "local" position, starting and stopping of the diesel generator shall

be possible using only local controls The status of the switch in the local position shall be indicated through the plant DCS operator interfaces When the switch is in the "remote" position, starting and stopping of the diesel generator shall be possible using only the operator interfaces located in the control room When in remote mode of operation, the diesel generator shall start automatically upon receiving a signal that a normal power source (station essential service 400 volt SUS) has failed However, removal of this signal shall not stop the engine Once started automatically, the diesel engine shall continue to run until it is manually stopped from either the local controls, or from the remote control interface located in the control room Auto start of the diesel generator shall be disabled when the location mode selector is in "local" position

The station essential service switchgear or MCC shall consist of one 400 volt bus suitable to provide power to the essential service motors and other associated loads The normal power source for the essential service switchgear or MCC shall be through a feeder breaker at the plant load center and the alternate power source shall be the emergency diesel generator (via breaker)

If the normal power sources fail, the diesel generator shall be automatically started As soon as the diesel generator achieves appropriate frequency and voltage, the diesel generator breaker at the essential service switchgear or MCC closes providing power to the essential loads When the normal power sources become available again, the control room operator should close the load center feeder breaker to essential service switchgear or MCC and open the diesel generator breaker and shut down the diesel engine

All transfer and retransfer operations between the diesel generator and the SUS power source shall be checked for synchronization using synchronizing check devices Provisions shall be made for synchronizing and paralleling the emergency diesel generator with the 400 volt essential service for exercising and load testing Under the case of load testing, the short-circuit ratings of the 400 volt essential service SUS, the essential service MCCs, or the diesel generator shall not be exceeded when the diesel generator is paralleled with the 400 volt essential service SUS

Current transformers, potential transformers, meters, etc , shall be provided at the station essential service switchgear or MCC as required All logic governing the control, monitoring, and sequencing of loads on the essential service switchgear or MCC electrically operated breakers as well as the initiation of the EDG autostart command, shall reside in the Unit DCS

The diesel generator shall be capable of meeting the voltage regulation criteria described in Subsection 9 4 2 2 and shall be in accordance with the applicable recommendations of IEEE 446

9 11 DC Power System

The dc power system for the plant shall consist of an individual 250 volt dc system to supply power to station dc power loads including emergency oil pumps and uninterruptible power supply (UPS), and a 125 volt dc system to supply power to control, protection, and instrument loads

Each battery shall be sized in accordance with IEEE 485, shall be based on the emergency duty load cycle and a 20 year life, and shall include a reasonable design margin An aging factor of 1 25 shall be used for battery sizing calculations

The emergency duty load cycle shall consist of the dc load requirements following a unit trip for a period of 3 hours The dc motor inrush current and duration shall be incorporated into the load cycle of the battery serving that load The battery ampere-hour capacity at the 8 hour rate shall be based on the emergency load cycle to a final voltage of 1 75 volts per cell In preparing the duty cycle, all loads expected during the duty cycle shall be calculated using their anticipated starting and shutdown times

The station batteries shall be designed for full float service and shall have a high discharge rate, low deterioration rate, long life, and low maintenance for control and auxiliary power requirements Batteries shall be of the lead-acid, calcium or selenium alloy type, with flooded cells

During normal operation, the station battery shall "float" on the dc supply bus bars in parallel with the ac powered battery chargers, while the steady-state dc load is being supplied from the ac system using the chargers

Distribution of dc power shall be accomplished by the use of circuit breakers in the dc switchboards (one switchboard for 125 volt dc system and one for the 250 volt dc system) Thermal elements shall not be provided for motor feeder circuit breakers

In addition, two dc panelboards, as a minimum, shall be provided with circuit breakers for the distribution of the 125 volt dc control power

Each dc system shall operate ungrounded An alarm shall be provided for bus grounding and low voltage condition A ground test and detection system, with local and remote alarms, shall be provided for each battery system

Two 100 percent battery chargers shall be provided for each battery, one supplied from the normal ac system, and the other supplied from the emergency diesel generator ac system The battery chargers shall be capable of charging their fully discharged battery within 12 hours while supplying steady state DC load

The battery room(s) for flooded cell batteries shall be designed in accordance with the applicable requirements of IEEE 484 with the following exceptions and additions

(a) Battery charging equipment, ac and dc switchboards and panels, light switches, etc , shall not be installed in the same room with the batteries
(b) Floor drains shall be installed in the room
(c) A shower and eyewash station shall be provided
(d) No unrelated power or control wiring shall be routed through the battery room
(e) Station phone shall be extended into the battery room

The dc power system and batteries shall comply with the applicable requirements of IEEE 946 and IEEE 484

9 12 Essential (UPS) ac System

An essential ac power system shall be provided to supply continuous regulated ac power to instrumentation and critical loads The essential ac power system shall provide 230 volt ac, single-phase, 50 hertz, 2 wire uninterruptible power with a grounded neutral

The UPS system shall include two full-capacity dc-to-ac static inverters, one voltage regulated bypass ac alternate source power supply with 400 volt single-phase transformer, two full-capacity static switches, one manual maintenance bypass switch, a set of surge protectors, as required, and other accessories and devices necessary to provide uninterruptible power The basic components of the unit UPS system are shown on the Key One-Line Diagram, E00036

Normal power supply to each UPS shall be from the dc system power source through the inverter and static switch to the uninterruptible bus If the inverter output voltage deviates from an acceptable set point, the transfer switch shall automatically transfer, without output power interruption, to the auxiliary ac system through the alternate source transformer Using the dual redundant system, the inverter shall be sized to carry the total combined load on both distribution panels Redundant loads that are powered from each distribution bus will need to be added only once when sizing the inverter

The static and manual bypass switches shall be purchased as part of the inverter and shall have a rating at least that of the inverter The alternate source transformer and voltage regulator shall be sized at least 15 percent greater than the size of the inverter

The unit's manual bypass switch shall be used to isolate the static switch from its load and alternate source power supply, and to take it out of service without power interruption to the load In so doing, it will connect both load buses to a single inverter It shall have make-before-break contacts so that the power supply to the loads is continuous during switch operations The manual bypass switch shall be rated 600 volts, single-phase, 50 hertz, and shall have a continuous rating equal to the continuous full load capacity of one inverter Operation of the manual bypass switch shall be such as to allow the load to be served by either or both inverters

The capacity of the UPS system shall be determined by the Contractor based on the essential loads to be served, such as

Distributed Control System (DCS)

Turbine Generator Control System (TGCS)

Main Control Room Recorder Chart Drives (if any)

Continuous Emissions Monitoring Systems (CEMs)

Fire Detection

Each UPS shall have a minimum 10 percent installed, unused spare capacity

Loads such as DCS, turbine control system, etc , considered to be critical to the operation of unit shall be fed from both of the UPS power sources One UPS source shall be considered as the normal source while the other UPS source shall be considered as the alternate source The power conditioning components at the critical load shall be able to automatically switch the loads to the alternate UPS source in case of failure of the normal UPS source Noncritical loads such as plant communication systems, fire detection systems, etc , and systems which do not adversely affect the continued operation of the plant, shall be powered from either UPS source Operator's consoles with multiple equipment and CRTs, each capable of performing the same functions, shall essentially have half the equipment powered from one UPS source and the other half from the second UPS source

Each UPS ac system shall meet the applicable requirements of IEEE 1100 and IEEE 446 It shall be possible to fully isolate each outgoing UPS feeder circuit for maintenance using circuit breaker for each branch circuit devices

Each UPS shall be provided with complete surge protection in accordance with manufacturer's standard practice

9 13 Motors

9 13 1 All motors shall be designed in accordance with NEMA MG1, and ANSI C50 41 All motors shall be "High Efficiency" type, and shall be designed to operate in an ambient temperature of 40°C (104°F)

The voltage rating of the ac motors will be as follows

• All motor-operated valves	380 volts, 3-phase, 50 Hz
• Motors below 0 37 kW (1/2 HP)	220 volts, single-phase, 50 Hz
• Motors 0 37 kW (1/2 HP) through 75 kW (100 HP)	380 volts, 3-phase, 50 Hz (fed from MCCs)
• Motors 90 kW (120 HP) through 190 kW (250 HP)	380 volts, 3-phase, 50 Hz (fed from load centers)
• Motors 191 kW (251 HP) and above	6,000 volts, 3-phase, 50 Hz

Direct current (dc) motors shall be rated 230 VDC as required for the service DC motors shall have winding types as required for the application, and shall be suitable for operation on the DC power source selected

AC motors 0 37 kW (1/2 HP) and larger in size shall be of the squirrel-cage induction type, rated for full voltage starting on the 3 phase power source selected AC motors smaller than 0 37 kW (1/2 HP) in size shall be of the capacitor start, induction run type, rated for operation on the single-phase power source selected

Medium voltage motors and low voltage motors shall be designed to start fully loaded as required by the driven equipment, and to accelerate their connected loads to rated speed, with a minimum of 80 percent (medium voltage) and 80 or 90 percent (low voltage) of motor rated terminal voltage Motors rated for 80 percent starting voltage or requiring special reduced voltage starting methods shall be provided only when required due to voltage drop considerations when distance between power source and load would necessitate cable sizes or cable quantities that are impractical

Starting current at full voltage shall be specified not to exceed approximately 630 percent of the motor full load current for alternating current motors with ratings greater than or equal to 40 kW, and shall be specified not to exceed approximately 800 percent of the motor full load current for motors rated less than 40 kW Starting current for dc motors shall be limited to approximately 500 percent of rated full load current

All motors shall have torque characteristics suitable for the driven load, and shall be able to start fully loaded as required by the driven equipment, and shall be able to accelerate their connected loads to rated speed with only the minimum percent of motor rated voltage at the motor terminals

All motors shall be specified to have a safe stall time, which is equal to or greater than the maximum accelerating time, while under minimum starting voltage conditions For medium voltage motors, if due to the specific nature of the driven equipment safe stall time is less than the acceleration time, the solid-state protective relay shall be programmed to limit the amount of acceleration time allowed, and to shift the overload curve, during starting, to maintain proper motor protection while starting and running

Motor windings shall have a Class F insulation system, suitable for power plant service, conforming to the requirements of NEMA MG1 The temperature rise shall not exceed limits for Class B insulation The stator insulation shall be of the vacuum pressure impregnation type for medium voltage motors The insulation system for low voltage motors shall include one extra dip and bake of varnish All motor stator conductors shall be copper

All medium voltage motors above 560 KW (750 HP) shall have copper or copper alloy rotor cage material Medium voltage motors rated 560 KW (750HP) or below may have aluminum rotor cage material

Medium voltage motors driving high inertia loads as defined by NEMA, regardless of motor rating, shall have copper or copper alloy rotor cage material

All medium voltage motors, and outdoor motors rated 22 kW (30 HP) and above, shall be provided with space heaters Motor operated valves and dampers shall be specified to have motor space heaters in addition to the valves or damper compartment space heaters Space heaters shall be rated for 440 volts, and powered from 220 volts, single-phase

Motors shall be selected to accommodate driven equipment without benefit of service factor rating

All indoor motors shall be guarded open drip proof (GDP) or totally enclosed type either non-ventilated (TENV) or fan-cooled (TEFC) Outdoor motors shall be weather protected, NEMA Type II (WPII) or totally enclosed fan-closed (TEFC) as applicable

Aluminum frames for motors shall not be used Each motor shall be furnished with a grounding connector attached to the motor frame inside the motor power lead terminal housing

Each medium voltage motor shall have an additional grounding connector permanently attached to the motor frame on the same side of the motor as the power lead terminal housing

All motors rated 1120 kW (1500 HP) or greater shall include three-wire, platinum type (alpha = 0 00385) RTDs with a nominal resistance of 100 ohms at 0°C as follows Antifriction bearing RTDs - one for each bearing, Winding RTDs - two for each phase When sleeve bearings are furnished on medium voltage motors, each sleeve bearing shall be equipped with a Type E (chromel-constantan), ungrounded thermocouple, which shall be located within 3 5 mm of the babbitt metal in order to minimize temperature differential and time lag

All motors shall be supplied with connection boxes of sufficient size to accommodate rated or oversized power lead terminations Medium voltage motor terminal boxes shall be large enough to accommodate stress cones on connecting power cables Motors rated 1120 kW (1500 HP) and larger shall have terminal boxes large enough to accommodate current transformers for motor differential protection

On medium voltage motors, accessory connection boxes shall be supplied separately from the power terminal box The instrumentation accessories, such as RTD's and thermocouples, shall be grouped in a separate box from the box which contains other accessories, such as space heaters and CT secondary wiring

Each motor shall be provided with a corrosion resistant nameplate containing information in accordance with NEMA MG1

Motors shall be suitable for electrical power supply systems using automatic "Fast" transfers

Motors located in hazardous areas, such as in the gas compressor areas, shall meet the requirements of the applicable area classification

9 14 Power, Control and Instrument Cables

9 14 1 General

The selection of cables and the installation of cables shall be in accordance with IEEE 422 All conductors shall be copper except for thermocouple wires

9 14 2 System Design Description

9 14 2 1 General

Power cable ampacities shall be determined using ICEA P-46-426, ICEA P-54-440, and NFPA 70 (National Electrical Code)

ICEA P-46-426 shall be used to determine ampacities for cables installed in exposed conduits, embedded conduits, and underground ducts The use of NFPA 70 shall be permitted for cables installed in underground ducts For conduits in air where the spacing between conduits is less than the conduit diameter, the correction factors given in ICEA P-46-426 TABLE IX shall be used

The ampacities of cables in conduits embedded in concrete floors shall be determined by using the tables for underground ducts

Ampacities for power cables installed in trays shall be determined in accordance with NFPA 70 or ICEA P-54-440

NFPA 70 TABLE 310-16 corrected to 40° C ambient temperature shall be used to supplement ICEA P-46-426 for cables smaller than 8 36 mm^2 (8 AWG)

Cables shall be rated at a conductor temperature of 90° C with ampacities based upon this temperature, except that temperature limitations for terminations at molded case breakers and other low voltage devices may require 60°C or 75°C ampacity values to be used All ampacities shall be based upon maximum continuous loads at a 100 percent load factor

Ambient air temperature in the general plant area shall be assumed to be 40° C (104° F) For areas where the ambient air temperature is known to be greater than 40°C ampacity correction factors shall be applied

The ampacities of cables installed in underground ducts or in isolated conduits in earth shall be determined using an ambient earth temperature of 20° C and an earth thermal resistivity

(RHO) of 90 For areas known to have an ambient earth temperature greater than 20° C, ampacity correction factors shall be applied

If the RHO is known to be higher than 90, the appropriate value shall be used

The full load current for power transformer cables shall be determined from the maximum kVA rating of the transformer

Cables which are routed through environmental conditions that differ along the cable run shall be selected using the environmental condition that results in the largest cable size

Medium voltage cables shall have a rated conductor temperature of 90° C, the minimum conductor size shall be such that the conductor temperature does not exceed 250° C while carrying the calculated maximum system three phase short circuit current, assuming no failures of the primary protective devices, and there shall be no damage to the insulation during the time for the fault to clear

Voltage drop in feeder cables to switchgear, transformers, motor control centers, and load centers shall not exceed 1 percent of the rated voltage during normal operation (excluding inrush) Voltage drop in feeder cables to motors and static loads shall not exceed 3 percent of rated voltage during normal operation of the load (excluding inrush)

The full load current for feeder cables to motor control centers, power panels and similar equipment shall be designed to equal the bus ampere rating of the equipment, regardless of the actual load, in order to provide room for load growth up to the capacity of the bus

Asbestos shall not be used in any cable construction

Cable splices are <u>not</u> permitted, without exception

9 14 2 2 Medium Voltage Cable

Voltage classification for medium voltage cables shall be 8 kV with 100 percent insulation level (115 mils insulation) for use at a nominal operating voltage of 6 3 kV

Medium voltage cables shall be single conductor or jacketed multi-conductor Each conductor shall be shielded

All materials for conductors shielding, insulation and jackets shall be in accordance with the following

1) All cable insulations and jackets shall be suitable for a maximum conductor operating temperature of 90° C

2) Natural or synthetic rubber compounds shall be in accordance with ICEA S-19-81

3) Ethylene-propylene rubber compounds shall be in accordance with ICEA S-68-516

4) PVC based primary insulation compounds shall not be used

5) Conductors shall be of soft-drawn, commercially pure copper conforming to ASTM B3

6) Primary insulation for all cables shall be a thermosetting material, or compounds meeting the requirements of AEIC CS6

7) Insulation shielding tapes for 8 kV cables shall be non-magnetic and shall be tinned copper of 5 mils (0 127 mm) minimum thickness Uncoated copper may be provided if the insulation and jacketing material will not corrode the copper and the insulation and jacketing material are free-stripping

8) Materials for jacketing shall have long-term resistance to sunlight, moisture, oils, and chemicals, and shall also be resistant to abrasion, shall have good flexibility, and shall neither support combustion nor propagate flame when tested Jacketing material shall be thermoplastic chlorinated polyethylene or polyvinyl chloride

9) Representative cables shall pass the vertical flame test in accordance with IEEE 383 using the ribbon gas burner 17640 kg/cal minimum

9 14 2 3 Low Voltage Power and Control Cables

Voltage classification for low voltage power and control cables shall be 600 volts

Conductor size for 600 volt power cables shall be a minimum of 4 0 mm^2 (12 AWG) In general, multi-conductor cables shall be used for sizes up through 50 mm^2 (1/0 AWG)
Conductor size for 600 volt control cables shall be a minimum of 2 5 mm^2 (14 AWG)
All materials used for conductors, shielding, insulation, and jackets shall be in accordance with the following

1) All cable insulation and jackets shall be suitable for a maximum conductor operating temperature of 90° C

2) Conductors shall be of soft-drawn, commercially pure copper conforming to ASTM B3, having Class B standard stranding

3) Primary insulation for all power and control cables shall be thermo-setting material or compound meeting the requirements of ICEA S-19-81, S-66-524 and S-68-516 as applicable

4) PVC based primary insulation compounds shall not be used

5) Fillers used in the assembly of multi-conductor cables in order to achieve a circular cross-section shall be of nonhygroscopic, flame-retardant materials that shall neither support combustion nor propagate flame when tested Jute fillers shall not be used in any cable constructions

6) Materials for jacketing shall have long-term resistance to sunlight, moisture, oils, and chemicals, and shall also be resistant to abrasion, shall have good flexibility, and shall neither support combustion nor propagate flame when tested Jacketing material shall be thermoplastic chlorinated polyethylene or polyvinyl chloride

7) Representative cables shall pass the vertical flame test in accordance with IEEE 383 using the ribbon gas burner 17640 kg/cal (70,000 Btu) minimum

9 14 2 4 Instrumentation and Thermocouple Extension Cables

Voltage classification for instrumentation and thermocouple extension cables shall be 300 volts where permitted

The conductor size for low level signal wiring shall be 1 5 mm^2 (16 AWG), and includes twisted shielded single pair thermocouple cable, single pair, triads, and multiple pairs instrumentation cable The conductor size for four-pair and greater twisted shielded instrumentation and thermocouple cable shall be a minimum of 1 0 mm^2 (18 AWG) Multiple paired cables shall be used wherever possible and practical

All material used for conductors, shielding, insulation and jackets shall be in accordance with the following

1) Instrument and thermocouple extension cables shall be manufactured in accordance with UL 13

2) Conductors, excluding thermocouple extension wires, shall be of soft-drawn, commercially pure copper Copper conductors shall conform to ASTM B3 and ASTM B33 Copper conductors, shielding tapes, shielding braids, communication wires, and drain wires used with rubber or rubber-like insulation shall be tinned Uncoated copper may be provided if the insulation and jacketing material will not corrode the copper and the insulation and jacketing material are free-stripping

3) Basic insulating materials shall be highly resistant to moisture and flame, and shall maintain dimensional stability in service

4) Jacketing materials shall have long-term resistance to moisture, oils and chemicals, and shall be flame resistant with self-extinguishing characteristics

5) Primary insulation for all instrumentation and thermocouple extension cables shall be polyvinyl chloride meeting the requirements of UL 13

6) Fillers used in the assembly of multi-conductor cables in order to achieve a circular cross-section shall be of non-hygroscopic, flame-retardant materials Jute fillers shall not be used

7) Shielding shall be accomplished by the use of aluminum or copper-backed mylar tape spirally wrapped with adequate overlaps around each pair or triad of insulated conductors, and an additional overall shield shall be used on a cable consisting of an assembly of pairs, triads or quads Each tape shield shall be provided with a 7 strand copper drain wire no smaller than 0 82 mm^2

8) Each pair of thermocouple extension wires shall consist of insulated conductors of chromel-constantan or chromel-alumel as required Conductors of each pair shall be matched and shall be calibrated to ANSI C96 1 for standard limits of error

9) All conductors shall be stranded using ASTM B8, Class B standard stranding, excluding thermocouple extension cables which shall use solid conductors

10) Representative cables shall pass the vertical tray flame test in accordance with IEEE 383 using the ribbon gas burner 17640 kg/cal (70 000 Btu) minimum

9 14 2 5 Lighting and High Temperature Cables

Wire for lighting branch circuits shall be single copper conductor, stranded, 600 volt Type XHHW with moisture and heat resistant cross-linked synthetic polymer insulation, rated for 90°C (dry) and 75°C (wet) copper temperature

Wire for lighting fixtures and for high temperature, nonlighting applications, shall be single copper conductor, stranded, 600 volt Type SF-2 silicone rubber insulation, rated for 200° C copper temperature, with glass cloth braid

9 15 Motor Protection

Medium voltage motors shall be provided with protection in accordance with ANSI/IEEE C37 96

Instantaneous ground overcurrent protection device shall be provided for each medium voltage motor This protection shall be implemented with a zero sequence ground sensor that encircles all 3-phase conductors of the outgoing motor feeder cables

Medium voltage motors 1,120 kW (1,500 horsepower and larger shall be provided with Multilin SR469 motor management relays with alarm capabilities, which shall provide the following protective functions

SR469 (Identified as MPR1 on one-line diagram)

Function No	Description
49	Machine stator temperature by embedded RTDs
51	Time delay phase overcurrent
50	Instantaneous phase overcurrent (short circuit), mechanical jam
48	Locked-rotor (incomplete sequence)
46	Phase current unbalance
27/59	Undervoltage/overvoltage
47	Phase reversal
86	Lockout
87*	Motor differential
50G	Instantaneous ground fault - zero sequence

* Input provided from three donut type current transformers (flux balancing) one in each phase located at the motor

The control power supply for the relay shall be 125 VDC

Medium voltage motors 191 kW (251 hp) through 1,119 kW (1,499 hp) shall be provided with Multilin 239 motor protection relays, with alarm capabilities, which shall provide the following protective functions

Multilin 239 (Identified as MPR on one-line diagram)

Function No	Description
51	Time delay phase overcurrent
50	Instant phase overcurrent (short circuit), mechanical jam
48	Multiple starts/locked-rotor
46	Phase current unbalance
86	Lockout
50G	Instantaneous ground fault - zero sequence

The control power supply for the motor protection relays shall be 240 volts ac, single-phase, 50 Hz, derived from a control power transformer (CPT), located in each 6 3 kV motor controller

Medium voltage motor surge studies shall be performed by the switchgear or motor controller supplier, or the need for motor surge protection shall rely on the switchgear or motor controller manufacturer's recommendations Any required surge protection shall consist of the switchgear manufacturer's standard surge suppression devices

Motor circuits served from the 400 volt load centers (USSs), which are controlled by power circuit breakers, shall have solid-state trip devices with long-time, instantaneous and ground characteristics

Motors served from 400 volt motor control centers shall be protected by motor circuit protector (MCP) combination motor starters consisting of molded case breakers with adjustable magnetic only trip devices and magnetic starters having thermal overload relays Application of MCPs shall be in accordance with the applicable guidelines of ANSI C37 96

Selection and application of the thermal overload relays in motor control centers shall meet the applicable requirements of ANSI C37 96, and NFPA 70 (National Electrical Code)

9 16 Conduit, Cable Trays, and Duct Banks

9 16 1 General

Raceways shall be designed and installed in accordance with IEEE 422

9 16 2 Conduits

All exposed conduit, except for lighting and communications circuits in indoor office areas shall be rigid steel hot-dip galvanized inside and outside, in accordance with UL 6 and ANSI C80 1

Conduits for structures pumping water, such as structures for circulating water pumps, shall be PVC, PVC coated steel or rigid aluminum Plastic conduit for aboveground applications shall be sunlight resistant, high impact, schedule 80, polyvinyl chloride and shall be Carlon Plus 80 rigid PVC nonmetallic conduit as manufactured by Carlon Electrical Products or acceptable equal Plastic conduit for aboveground lighting and communication applications shall be sunlight resistant, high impact, schedule 40, polyvinyl chloride and shall be Carlon Plus 40 rigid PVC nonmetallic conduit as manufactured by Carlon Electrical Products or acceptable equal

Conduits for lighting circuits and communications circuits in indoor office areas (concealed conduits) shall be electrical metallic tubing (EMT), galvanized outside for corrosion protection, in accordance with UL 797 and ANSI C80 3, and shall be furnished with compression fittings EMT shall not be used in any other area

Conduit sizes shall be determined in accordance with NFPA 70, Chapter 9, Table 4 Minimum conduit size shall be 20 mm nominal diameter, except for lighting fixture stems which may be 12 5 mm nominal diameter, and for embedded conduit which shall be minimum 25 mm nominal diameter

Liquid-tight flexible conduits shall be used on all motor connections and all other connections subject to vibration Length of liquid-tight flexible conduit shall be limited to maximum of 1 0 meter

Cast fittings for aluminum and steel conduit shall be of copper-free aluminum alloy corrosion resistant with standard ANSI threaded connections Fittings shall have gasketed covers Copper-free aluminum alloy shall contain no more than 4/10 of 1 percent copper

Pull boxes, junction boxes and terminal boxes for use in indoor locations shall be of steel in accordance with UL 50, rust-proofed after fabrication with one coat of zinc chromate primer and one coat of enamel Covers of pull and junction boxes shall be fastened with brass machine screws Covers of termination boxes shall be hinged and fastened with latches

Pull boxes, junction boxes and terminal boxes for use in outdoor locations shall be of steel in accordance with UL 50, epoxy coated inside and outside after fabrication with gasketed cover, mounting lugs, and conduit hubs

Indoor or outdoor prefabricated pull boxes, junction boxes, and terminal boxes shall be NEMA rated or IEC rated for the installation location

Pull sleeves shall be rigid steel, hot-dip galvanized after fabrication in accordance with ASTM A123

9 16 3 Underground Ducts

As and when required the underground duct system shall consist of conduits or ducts encased in concrete envelopes together with handholes and manholes

Plastic conduit for direct buried and concrete encased applications shall be sunlight resistant, high impact, rigid nonmetallic utility duct and shall be Carlon P&C Duct Type DB conforming to NEMA TC 6 as manufactured by Carlon Electrical Products or acceptable equal

Duct banks shall be installed with a minimum slope of 150 mm per 30 meters to provide proper drainage

Duct bank routes shall be identified at 30 meter minimum intervals by means of a 10 cm by 10 cm concrete marker set flush with grade, and with the letter "E" and an arrow cast in the top Markers shall not be physically connected to the duct bank

Duct banks shall be assembled using nonmagnetic saddles, spacers and separators as recommended by the duct manufacturer Separators shall provide 7 5 cm minimum concrete between the outer surfaces of the conduits

Joints or couplings for the duct runs shall be of the same materials as the ducts

Underground ducts which are less than 6 meters in length between ends, and all elbows and risers shall be rigid galvanized steel conduit

Ducts which pass under roadways, railroads, or in areas subject to movement of heavy equipment shall be reinforced concrete encased and structurally adequate for the loads imposed

Galvanized steel conduit in any underground construction, whether as a single duct or in duct banks, shall be encased in a minimum of 5 cm of concrete for protection against corrosion Approximately 20 percent spare duct capacity shall be provided for future expansion

9 16 4 Cable Trays

Cable trays for power, control and instrument cables shall be ladder type with 23 cm rung spacing, with width and depth as required

Ladder type cable trays shall also be used for instrumentation and "low level" signal cables However, where spacing cannot be maintained to limit magnetic noise, shielding of the instrumentation and "low level" signal trays shall be provided

Solid covers shall be provided on all outdoor trays and on indoor horizontal trays exposed to falling objects or subject to the accumulation of debris Solid covers shall be peaked as required to prevent accumulation of water and debris on cable trays Cable trays which run under floor gratings or access platforms, or parallel to walkways, and in close proximity thereto, shall be provided with covers Trays under gratings and walkways shall have these covers extended approximately 1 meter beyond the extremity of the walkway or grating On multi-tier cable tray installations, the foregoing requirement applies only to the top tray Where power cable trays are required to be continuously covered by solid covers for more than 2 meters, the covers shall be raised approximately 50 mm to provide ventilation, or the cables shall be derated by a factor of 0 95 Solid covers shall be provided on vertical tray risers to provide safety and protection to the cables at floor levels The covers shall extend approximately 2 meters above the finished floor

Separate cable trays shall be installed for the following cables, and if following the same routing, from top to bottom as follows

- Medium voltage power level (6 3 kV, top tray)
- Low voltage power level (400 volt ac 240 volt ac 230 volt ac 125 volt dc and 250 volt dc)
- Control level (240 volt ac 125 volt dc, and below)

Single power conductor cables smaller than 50 mm^2 (1/0 AWG) shall not be installed in ladder type trays Multi-conductor cables smaller than 50 mm^2 (1/0 AWG) may be installed in ladder type trays

Lighting system wiring, communications wiring, and fire detection wiring shall not be installed in cable trays

Cable trays shall be suitable for use as equipment grounding conductors in accordance with the requirements of NFPA 70

Fire stops of fire-retardant materials shall be used indoors at floor and wall penetrations of enclosed areas with solid walls and floors to prevent passage of air from one area to another Fire stops are not required where cable trays pass from one area to another through grating floors and walls Trays shall not be routed over areas of high fire hazard, e g , main turbine lube oil reservoir and diesel generator sets

9 17 Grounding System

9 17 1 General

Design criteria for ground grids, grounding of power supply system neutrals and grounding of electrical equipment and metallic structures (above and below ground) is provided herein Application of this criteria shall be coordinated with the criteria for Lightning Protection and Cathodic Protection The design of the generating station grounding shall conform to IEEE 665 and IEEE 142 and shall be supplemented by the criteria herein All equipment grounding shall be in accordance with the Article 250 of NFPA 70 and ANSI C2

Soil resistivity and thermal resistance (RHO) test data shall be obtained from the site by conducting site soil survey(s) prior to the beginning of the plant grounding system and ground grid design

The design of the grounding system shall be to achieve the following objectives

1) Provide a low impedance ground-fault current return path

2) Maintain safe step and touch potentials within station structures during electrical transients

3) Minimize ground potential rise and noise interference in instrumentation systems to ensure safe and integrated ground grid for the entire plant

4) Minimize the effect of lightning surges on equipment and structures

5) Eliminate or render safe any transfer of potential between the ground grid area and outside points

9 17 2 System Design Description

9 17 2 1 Ground Grid

The station shall be provided with a ground grid consisting of bare copper cables buried beneath grade to limit step and touch potentials to safe values under fault conditions and to dissipate lightning induced surges to protect plant sensitive electronic equipment The design and analysis of the station ground grid, including transformer yards, shall be based on the procedures and recommendations of IEEE 80, and 665 as applicable Evaluation of step and touch potentials based on the geometry of the grid shall be in accordance with IEEE 80 Soil resistivity of the plant facilities shall be measured by the Wenner method described in IEEE 80 and 81 After the ground grid potential profile analysis has been determined, the tolerable step and touch potentials shall be checked in accordance with IEEE 80 procedures

The ground grid shall be designed such that, after it has been installed, the entire station resistance to remote earth shall be less than 1 0 ohm as measured using the slope method, a variation of the fall-of-potential method, described in IEEE 81 The ground grid shall be tested while isolated from any Armenergo facility and before any ground grid ties to Armenergo facilities are installed

The grounding system design shall minimize transfer of potentials from the ground grid to remote points via communication circuits, piping, low-voltage neutral wires, railroad spurs, etc Suitable means (such as piping insulated flanges, insulated joints for railroad track) shall be provided to prevent undesirable potentials on the ground grid during ground faults from being transferred between the ground grid and remote points

Foundation reinforcement steel and steel structures shall not be used for the conduction of the ground current from one point to another point within the ground grid

All materials for the entire ground grid shall be manufactured from copper If the chemical composition of the soil allows it, copper-clad ground rods with 13 mils minimum copper

thickness shall be used Otherwise, copper cable or copper clad rods in wells, filled with earth or special backfill, shall be used

9 17 2 2 Aboveground Equipment and Structures

Each building shall have a grounding conductor installed around the building perimeter The conductor shall be used to tie the building steel to the ground grid Metallic door frames of external doors shall be directly tied to the plant's ground grid system Metallic door frames of internal doors may be grounded through building steel

Major equipment and tanks shall be connected to the main ground grid Physically large equipment shall be connected to the main grid in two places on opposite sides

Metallic structures and equipment, such as motor frames and/or motor power leads terminal housing, switchgear, unit substations, motor control centers, panelboards, lighting cabinets, conduits, cable trays, crane rails, stairs, handrails, and railroad spur tracks, shall be permanently and effectively grounded

Equipment and structures welded or adequately bolted to building steel, or solidly connected to building steel by means of suitable grounding cables, shall be considered effectively grounded However, equipment containing an electrical ground bus shall have a separate cable connecting the bus to the plant grounding system

Metal stacks and above grade tanks shall be grounded directly to the ground grid

The ground grid shall be designed to dissipate and/or disperse power voltages and lightning caused current flows without damage to the plant's electronic equipment, including but not limited to the Distributed Control System (DCS), UPS, PCs, etc of the plant

Grounding wire that penetrates grade shall be a minimum size of 95 mm^2 (4/0 AWG)

Railroad spur tracks shall be insulated at a minimum of two points in each of the rails and each insulating point shall be adequate to withstand the ground potential rise of the station during the maximum fault The rails shall be insulated at the point where the rails leave the ground grid area Rail splice bars shall be considered effective in conducting the ground current from one rail segment to another The existing railroad at the site shall be connected to the plant grounding system, but shall be isolated when leaving the site

9 17 2 3 Grounding Below Grade

The design and installation of the station ground grid and station cathodic protection shall be coordinated to mitigate cathodic protection problems Design and layout of the ground grid shall be coordinated with the cathodic protection requirements for buried tanks, piles, and piping Based on the cathodic protection survey, if these systems are to be grounded they shall be made electrically continuous by bonding across pipe joints and between pipes and tanks where applicable

Ground cables shall be laid on top or at the side of each underground electrical duct run, and shall be connected with ground cables from other duct runs at each manhole Ground cables shall be outside the duct bank concrete envelope All hardware including cable splices shall be bonded to these ground cables

9 17 2 4 Site Fence

The site fence, and all fences within the plant boundaries, shall be connected to the ground grid at approximately 10 meter intervals Two 95 mm^2 (4/0 AWG) (minimum) bare copper buried cables, approximately 50 cm below grade and 75 cm from the fence, each laying on either side of the fence, shall be installed for the ground grid connections

9 17 2 5 Circulating Water Pumps Structure

The existing ground grid at the circulating water pump structure shall be checked for adequacy The existing grid shall conform to this requirement Ground grids shall be made of all copper materials and shall be installed under the concrete of the intake water structure and connected to the station ground grid by ground cables laid to the side of the duct banks or water piping The size of the connecting ground cables shall be calculated based on carrying full ground current, assuming a double phase to ground fault in the power feeders The potential difference between the remote grid and the station grid shall be designed not to exceed 300 volts, and 95 mm^2 (4/0 AWG) copper cable shall be the minimum size used

9 17 2 6 Power Cable Shields

Shields associated with power cables shall be grounded in accordance with IEEE 422

9 17 2 7 Instrument Grounding

Separate instrumentation grounding system shall be provided for all low level, analog, and digital (data communications) circuit shields as required by the equipment system suppliers

The majority of these buses will reside in the plant DCS cabinets Instrumentation grounding buses shall be kept isolated from the station grounding system except at one point per local geographic area At this point, dedicated insulated ground conductors shall extend from the instrument ground bus to the station ground grid at a single location The DCS system grounding shall be in accordance with the requirements of DCS system supplier Removable links shall be provided to the instrument ground to test and/or to detect for the presence of common mode noise in the sensitive instrumentation circuits Grounding of instrumentation circuits shall be in accordance with IEEE 422, IEEE 518, IEEE 1050, and IEEE 1100

9 17 2 8 System Neutral Grounding

The neutral of the high voltage windings (110 kV) of each generator step-up transformer and start-up transformer shall be designed for operation on a solidly grounded system

Each generator neutral point shall be grounded through a distribution type grounding transformer and secondary loading resistor The transformer and the resistor shall be sized in accordance with IEEE 142 and IEEE 32

The medium voltage system shall be grounded through a resistor to limit the ground fault current to a value required for proper relaying

The diesel generator neutral point shall be high resistance grounded

The neutral of the 400 volt winding on all unit substation power transformers shall be solidly grounded

The neutral point on the lighting and miscellaneous power transformers associated with 400/230 volt systems shall be solidly grounded

The dc system shall operate ungrounded Ground detection and alarm devices shall be provided to alert the control room operator of a ground on any leg of this ungrounded system, and to provide local indication and a DCS alarm

The Essential ac (UPS) System neutral point shall be solidly grounded

9 17 2 9 110 kV Transmission Line Shield Wires

All shield wires associated with 110 kV transmission lines between the generator step-up transformers and start-up transformer and the plant switchyard shall be extended to the ground grid at each end using two 95 mm^2 minimum (4/0 AWG) ground grid ties per each Ground

grid connections shall be capable of conducting maximum steady-state current flow, high currents induced by faults, switching surges, and lightning strikes

9 17 3 System Operating Characteristics

The grounding system, including equipment and structural grounding, shall be installed and tested for continuity prior to the energization of any part of the plant auxiliary electrical system

Measurement of the resistance to remote earth associated with the ground grids shall be completed prior to the installation of buried metallic systems or special equipment associated with the cathodic protection system to the extent practicable

9 17 4 Component Description

All underground or embedded grounding connections shall make use of exothermic connections exclusively

One 95 mm^2 (4/0 AWG) bare copper cables shall be installed with each underground electrical duct run laid outside the duct concrete envelope

All switchgear, load centers, motor control centers, and control cabinets shall be furnished with a horizontal ground bus The ground bus in switchgear, load centers, and MCCs shall be connected to the grounding system with one 95 mm^2 (4/0 AWG) (minimum) copper ground cable at each end

The ground bus in control cabinets shall be connected to the grounding system with 95 mm^2 (4/0 AWG) (minimum) copper cable at each end The enclosure of motors and instrument transformers shall be connected to the grounding system

Patterns of ground grid installed for lightning protection of concrete or masonry chimneys will vary with the type of footings to be used, but typically would consist of a 95 mm^2 (4/0 AWG) (minimum) cable buried below and just beyond the periphery of the base, interconnected at two diametrically opposite points to the plant sub-structure ground grid At least two 95 mm^2 (4/0 AWG) copper cable risers would be provided at diametrically opposite points on the grid for continuation above grade

The minimum conductor used for equipment grounding shall meet the requirements of IEEE 142, and the minimum conductor size selected for ground grid and connections to the ground grid shall not be less than 95 mm^2 (4/0 AWG)

Ground connections from the sub-structure ground grid to structural steel shall be of the exothermic type Above grade connections to building steel may be made with stud welds only when the connections are intended to be removable for test purposes

9 18 Cathodic Protection

The need and the extent of cathodic protection shall be established by a Site Corrosion Survey in accordance with Section 3 of NACE RP-01

If the site survey establishes the need for cathodic protection, the design of such protection shall meet applicable requirements given in Sections 6 and 7 of NACE RP-01 Coordination of grounding and cathodic protection requirements for all underground and ground level metallic structures, shall meet the requirements of Section 5 4 of IEEE 665, Chapter 9 of IEEE 80 and NACE RP-01-77

Critical areas for consideration shall include

- Underground and submerged structures and piping
- Intake structures (drum screens, trash racks, intake pumps, screen wash pumps and intake piping) The existing structure shall be checked for compliance
- Condenser water boxes
- Underground or submerged structural support members

9 19 Lightning Protection

Lightning protection shall be provided for the plant to protect the equipment and structures from the damaging effects of lightning The lightning protection design shall be coordinated with plant ground grid design to dissipate all lightning caused surges and protect the plant electrical and electronic equipment from hazardous overvoltages

The need for lightning protection shall be determined based on compliance with the guidelines covered in IEEE 665, IEEE 142, and Chapter 7 of IEEE 141 Where lightning protection is needed, it shall be designed and installed to meet the requirements of ANSI/NFPA 780, IEEE 665, and IEEE 1100 to afford adequate zones of protection

Some structures are inherently protected such as steel frame buildings, associated metal piping, sprinkler systems, ductwork and other conductive metal components Each structure shall be evaluated for their electrical continuity as described in ANSI NEPA 780, to ensure adequate electrical bonding and grounding of the steel

All concrete structures shall be protected by grounded air terminals

Reinforced concrete chimneys where provided shall be protected in accordance with NFPA 780 and IEEE 665

Outdoor high voltage electrical equipment shall be protected from lightning either by shield wires provided as part of incoming lines from the switchyard, or by masts

9 20 Plant Lighting

The lighting system shall provide personnel with illumination for plant operation under normal conditions, a means of egress under emergency conditions, and emergency lighting in control room to perform manual operations during a power outage of the normal power source

The power supply for the lighting system shall generally be from 400/230 volt three phase 4-wire solidly grounded lighting panelboards The 230 volt power shall be used to supply convenience outlet receptacles and light fixtures

The lighting system shall be designed to maintain the foot-candle level of illumination recommended in IES Lighting Handbook for the various areas in the power plant Table 9-1 illumination levels shall be used as a guide

Three types of lamps shall be used for the light sources in the lighting system fluorescent, high pressure sodium (high intensity discharge), and incandescent Generally, fluorescent lamps shall be used in indoor enclosed areas, high intensity lamps shall be used outdoors and in high and medium bay areas, and incandescent lamps shall be used for emergency lighting Recessed fluorescent fixtures with parabolic louvers shall be used in office areas (suspended ceilings)

Plant internal roadway and area lighting shall be designed using high intensity discharge light sources Light fixtures shall be installed on hot-dipped galvanized steel street lighting poles or precast concrete poles

The emergency egress dc lighting system shall be supplied from self-contained battery lanterns located to permit orderly egress from the plant during an emergency In general, egress

emergency lights shall be provided in plant access walkways, stairways and platforms, in control rooms, access corridors, and other areas where highly reliable illumination is required for orderly egress from the plant Battery packs shall also be strategically located in the main control room The battery packs shall each be sized to provide adequate illumination for a period of 90 minutes

Control room lighting shall consist of general area, emergency, and interior control panel lighting Control room general area lighting shall be provided by using recessed fluorescent fixtures with reflective parabolic louvers and lamp dimming ballasts The intensity of the general area lighting shall be controlled by fluorescent dimmers The fixtures shall be powered from the plant 220/400 volt reliable ac source backed up by the standby diesel generator Incandescent light fixtures for emergency lighting shall be installed The incandescent emergency lighting fixtures shall normally be off and shall automatically illuminate upon loss of the plant reliable ac service The emergency lighting shall be powered from the 250V DC switchboard

Aviation red obstruction lighting or a high intensity lighting system shall be provided on the stacks in accordance with the International Standards and Recommended Practices of the International Civil Aviation Organization (ICAO) Undervoltage detectors shall be utilized on the load side of the ac service to the aviation lighting system for local and plant DCS system alarming The number of levels of lights on the stack and the number of lights per level shall be based on the requirements of ICAO or the Department of Transport, Armenia, which controls all matters pertaining to aircraft movements Lights shall be powered from the essential motor control center

General purpose outlets shall be located throughout the plant and office areas In plant areas, general purpose outlets shall be located on building columns generally so that an outlet is not more than 20 meters from an adjacent outlet In office areas, general purpose outlets will be located on each wall, and in no case shall they be located more than 4 meters apart The convenience outlets located at grade outdoors, at ground floor turbine building or areas that are considered wet shall be protected by ground fault interrupting (GFI) circuit breakers GFI circuit breakers shall be 230 volt, single-phase, 50 hertz, 30 milliamp electro-mechanical residual current type with 30 millisecond trip

In large areas, fixtures shall be circuited such that a single panel failure will not cause a total loss of illumination in that area

Ballasts for fluorescent and high intensity discharge lamps shall be of the high power factor type All fluorescent lamp ballasts shall be rapid start High intensity discharge lamp ballasts shall be of the core and coil regulating type

Dry type transformers shall be class AA, 3-phase, 400 volts delta primary, 416 Y/240 volts secondary with full capacity taps above and below normal Dry type transformers shall have 220 degrees C insulation system in accordance with NEMA ST20, with 150 degrees C rise above 40 degrees C ambient Transformers shall be provided with two 2 5 percent taps above, and two 2 5 percent taps below, normal

TABLE C 9 1
REQUIRED ILLUMINATION LEVELS

Plant Locations	Maintained Lux (Foot candles)
CT/ST Generator HRSG Building	300 (30) H
Conference Rooms	500 (50) F
Tanks Compressors or Gauge Area	200 (20) H/F
Chemical Laboratory	500 (50) F
Control Room	500 (50) F (adjustable Dimmer Control)
Control Room Emergency Lighting	100 (10) I
Hydrogen Manifold Area	200 (20) H
Offices	500 (50) F
Locker Rooms	200 (20) F
Machine Shop	1000 (100) H
Battery Room	300 (30) I
Corridors	100 (10) F
Stairwells	100 (10) F
Switchgear USS MCC Rooms/Areas	300 (30) H/F
Telephone Equipment Room	300 (30) F
Toilets	200 (20) F
Sodium Hypochlorite Building	200 (20) H/F
Relay Rooms	500 (50) F
Electronic Equipment Rooms	500 (50) F
Circulating Water Pump Structure Electrical Building	300 (30) F
Cooling Tower Maintenance Platforms	50 (5) H**
Sewage Treatment Plant Area	20 (2) H
Catwalks	20 (2) H
Oil storage tanks	10 (1) H**
Boiler platforms stairwells	100 (10) H
Roadway	
Between or along buildings	10 (1) H
Not bordered by buildings	5 (0 5) H
Fence	2 0 (0 2) H*
Plant Entrance Area	50 (5) H
Parking Areas	20 (2) H
Transformer and Switchyards (vertical task) (horizontal task)	 50 (5) H** 20 (2) H

H = High Intensity Discharge (HID)
F = Fluorescent
I = Incandescent
*Fence lighting average maintained illumination
** Existing areas to be checked for adequacy

9 21 Communication System

9 21 1 General

This section establishes the criteria for the communication system consisting of a plant communications system, and a Private Automatic Branch Exchange (PABX) telephone system of digital equipment support type

9 21 2 System Design Description

9 21 2 1 Plant Communication

1) General

The communication system within the power plant and outlying structures shall be a multiparty system with one page channel and five party channels similar to Gaitronics, or approved equal

2) Paging

Each handset station shall be equipped to broadcast speech over all system speakers simultaneously by picking up the handset, depressing the switch on the handset and speaking into the microphone on the handset If necessary, the speaker adjacent to the set will be silenced automatically when the handset is removed from its cradle switch to prevent acoustic coupling

3) Party Line

In addition to the page switch, five (5) party line channels shall be provided for each handset station The channels shall be common talking, so that all stations may take part in any conversation After paging, the calling party releases the PAGE switch and sets his party line selector switch to the desired channel The called party picks up his handset, sets his party line selector switch to the same channel and begins conversation

4) The plant communication system shall consist of industrial type handsets handset/ speaker amplifiers, speaker amplifiers, speakers, and line balance assemblies Handsets shall be installed 1 37 meters above the floor in the vicinities of personnel traffic ways and areas such as the control room, switchgear bay, and maintenance areas Speakers shall be installed a minimum

of 2 5 meters above the floor throughout the main plant building and in outlying structures to provide for personnel paging All hardware shall be intrinsically safe

9 21 2 2 Telephone System

1 A Private Automatic Branch Exchange (PABX) telephone system shall be provided to facilitate communication through the local area telephone system The system shall be fully automatic and operate in the same manner as commercial telephone systems Interconnection shall be provided to permit interplant communications using the public address party line equipment

Speaker phones for Plant Control Room, Supervisor's Room, and Office Areas shall be provided

2 The main distribution frame (MDF) and cable terminating frame (CTF) shall be cross-connected type, having adequate capacities The terminal blocks shall be the quick-connected type The connections of the telephone wires shall use the quick-connected technique without peeling, cutting, soldering, or wrapping the cables

3 A minimum of eight (8) outside lines will be provided from Local Telephone Company The lines shall be dedicated as follows

Location	Lines	Description
Control Room	1	Dedicated for operator use, totally separate services using unlisted numbers
Administration/ Workshop/Warehouse Building	4	
Direct Tie to Yerevan CHP Control room	1	
Future Expansion	2	
Total	8	

4 Associated requirements

a Telephone utility connections, that are installed totally independent of one another, shall be provided The total number of telephone lines shall be divided equally between the two feeder cables to create an acceptable level of redundancy

b If copper cables are installed (connection to utility), the cables shall contain sufficient spare capacity (generally 30 to 50 percent) for growth as well as for replacement of failed or deteriorated cable pairs

5 The following features shall be included for the telephones

a All phones serving the Main Control Room and Administration/Workshop/Warehouse Building, shall have capability for Redial, Hold, Transfer, Call Forwarding, and Three-Way conference

b All phones shall have class of service capability (ability to block unapproved access)

c Each phone shall have access to all other Plant Internal phones

d Lines serving the Main Control Room shall have service priority to maintain service during congestion at the carrier's central office facility

e It is expected that digital telephone lines will be extended to every workstation However, for workstations that require modems e g , facsimile devices, FAX servers, modems in PCs, etc , analog telephone lines shall be required

f A "Do Not Disturb" feature shall <u>not</u> be provided for any telephone line, to allow access during an emergency

g Emergency by-pass lines and relays shall be installed at the plant to provide emergency telephone service when the plant PABX fails The by-pass relay will link critical telephone instruments to the central office trunks, for call out only

6 The following Personnel Policy shall be followed for telephone use

a Unrestricted personal use shall be provided for the Plant Manager Plant Engineers, Plant Section Supervisors, and the Plant Warehouse

b All phones with restricted access shall be routed through the Plant Telephone operator (receptionist) to obtain access to outside lines

7 Any telephone lines (Public Phone) entering the plant area shall be adequately protected by the Contractor against hazardous voltages from the plant electrical systems

9 21 2 3 Clock System

The DCS, two fault recorders, and any other slave clocks shall be synchronized with a master clock Minute pulses from this master clock shall be used to synchronize the DCS, fault recorders, and any slave clocks The Master Clock system shall be driven by signals received from two (redundant) transmitters of the World Wide Navigation System arbiter clock There are eight (8) transmitters around the globe associated with OMEGA system The signal issued at a frequency of 12 8 kHz will be received at Yerevan

9 21 2 4 Operational Condition

Direct telephone communication from the CHP Control Room to the CCGT plant control room shall form the basis for dispatch directions

9 22 Revenue Metering

9 22 1 General

This section establishes the criteria for the revenue metering system that will be used to record power transfer occurring between Yerevan Plant and 110 kV grid system

9 22 2 System Design Description

a) The 110 kV revenue metering system shall be designed to be in full compliance with Armenergo requirements The 110 kV revenue metering currents and potentials shall be measured at each terminal line connected to the 110 kV Substation

b) Each energy meter shall comprise kilowatt-hour meter and kilovar-hour meter integrally combined in the same enclosure Each energy meter shall be three-current element, single tariff, solid state, and import and export energy registration type Each meter shall have the accuracy class 0 2S for the kilowatt hour meter and class 0 5S for the kilovar-hour meter Each energy meter shall

be flush mounted, back connected, dustproof, fully tropicalized, switchboard type and located in the 110 kV substation control building Each meter shall be equipped with pulse devices for retransmitting the measured active and reactive energy to the universal telecounting instrumentation

c) Each universal telecounting instrument shall be of the flush mounted, back connected, dustproof, fully tropicalized, switchboard type and located in the 110 kV Substation control building Each instrument shall be pulse operated and static type design Each instrument shall comprise input units, summation device, display unit, timer and necessary components to interface with the energy meters

9 22 3 System Operating Characteristics

The revenue metering system shall be capable of displaying, transmitting and continuously recording the following parameters MW (out/in), MWh (out and in), Mvar (lead/lag) and Mvarh (lead and lag)

9 22 4 Component Description

a) The 110 kV revenue metering system equipment shall have the following ratings

C T Ratio	(later) single ratio, 2 x thermal rating
C T accuracy	Metering +/-0 2%, IEC Types
P T Ratio	$\frac{115{,}000\ V}{\sqrt{3}} / \frac{115\ V}{\sqrt{3}}, \frac{115\ V}{\sqrt{3}}$
P T accuracy	+/-0 2%
Revenue Meters (Primary and Backup)	+/-0 2%

9 23 Welding Receptacles

9 23 1 General

Welding receptacles shall be provided and located throughout the plant, in the areas and quantities as indicated in the table below

The power feeds to the various receptacles shall use thermal magnetic circuit breakers and shall be rated 70 amperes trip, 400 volts, 50 hertz, 3-phase, 3-wire Each feeder breaker can support a maximum of four receptacles The receptacles shall be daisy-chained where applicable

9 23 2 System Design Description

The welding receptacles shall be rated 60 amperes, 400 volts, 50 hertz, and will be 4-pole, 3-wire They are to be located as given in Table 9 2

For each welding receptacle the assembly and housing shall be Crouse-Hinds Type AR642, or acceptable equal Angle Adapters (Crouse-Hinds Type AJA6, or acceptable equal) and Back Boxes (Crouse-Hinds Type AJC57, or acceptable equal) shall also be furnished for proper mounting and field cabling of the receptacles A total of five (5) Crouse-Hinds Type APJ6485, 60 ampere mating plugs, or acceptable equal, shall be provided

Nameplates shall also be provided to identify each of the welding receptacles The welding receptacle nameplates shall consist of white phenolic engraving stock (background) with black cores (identification)

Table C 9 2
Welding Receptacle Quantities & Approximate Locations

Area	Quantity	Location
Turbine Bldg	4	To be determined in Detail Design by Contractor
HRSG Ground Floor	2	
HRSG Upper Levels	2	
Circulating Water Structure Electrical Bldg	1*	Inside equipment building

*existing facilities to be confirmed

9 24 <u>110 kV Substation</u>

9 24 1 General

Armenergo's 110 kV Substation at Yerevan Plant consists of air insulated switchgear installed outdoors The existing bus switching arrangement utilizes two main buses and transfer bus scheme The two main buses radially receive generation or feeds a load via a circuit breaker

A bus coupler circuit breaker between the two main Buses is provided to permit load transfer between the two main buses A bus transfer circuit breaker is provided to facilitate maintenance of any one circuit breaker without interruption There are twenty-five existing circuit breaker bays to accommodate twenty-three circuits - nine for outgoing transmission lines, seven for receiving existing seven generators, two for the existing startup (or reserve) transformers, one for bus coupler, one for bus transfer and five for spare or reserve The existing generating units 6 and 7 (150 MW each) will be demolished and the HV circuit breaker bays will be utilized for two GT generators of the new combined cycle power (CCP) plant The spare circuit breaker bay (circuit 27) will be utilized for the new ST generator of new CCP plant Drawing E0035 - Overall One Line Diagram - depicts partially the existing 110 kV substation single line and shows interconnections to the new combined cycle power plant

When the new combined cycle power plant is added, the Contractor shall as a minimum replace existing three circuit breakers of the bays being planned for reutilization The Contractor shall also verify the adequacy of any equipment that is being planned for reuse Contractor's bid price shall include all modifications, replacement of equipment, and any upgrade necessary of the existing 110 kV substation to accept and transmit power satisfactorily from the new combined cycle power plant to the grid system

The general design criteria to be used for 110 kV substation are described below

9 24 2 110 kV Switchyard Substation Parameters (existing)

Operating Voltage	110 kV
Maximum Design Voltage	123 kV
BIL Withstand Voltage	550 kV
Rated Short Circuit Current	20 kA
System Frequency	50 Hz
Minimum Clearances, metal - metal *	
Phase - Phase	1400 mm
Phase - Ground	1100 mm
Bus Design Clearance*	
Phase Spacing (centerline to centerline)	
Main Bus	2500 mm
Branch Bus	2250 mm

Phase Height Above Ground	
Main Bus	6100 mm
Branch Bus	4600 mm
Main and Branch Bus*	
Main Bus	125 mm
Branch Bus	75 mm

* Recommended values to be verified by Contractor

9 24 3 110 kV Switchyard Substation Major Equipment Ratings

9 24 3 1 110 kV Circuit Breakers

The power circuit breakers shall be in accordance with the following

Operating Voltage	110 kV
Maximum Design Voltage	123 kV
Type	SF_6 Dead Tank
Frequency/Phase	50 Hz/3 phase
Continuous Current Rating (As Required)	1200/2000/3000A
BIL Impulse Withstand	550 kV
Low Frequency Withstand	260 kV
Maximum Symmetrical Interrupting Rating	40 kA
Minimum Leakage Distance	3,075 mm
Number of Trip Coils	Two
Applicable Standards	ANSI C37

9 24 3 2 Disconnect Switches

All disconnect switches shall be aluminum, three-pole, manually operated type All disconnect switches shall be horizontal center break type Disconnect switches shall be provided with three pole manual group operated grounding attachments to facilitate maintenance of the connected equipment All bearings for use on the disconnect switches shall be sealed stainless steel type

Operating Voltage	110 kV
Maximum Design Voltage	123 kV
Continuous Current Rating (As Required)	1200A/2000A/3000A
Momentary Current Rating	64 kA
BIL Impluse Withstand	550 kV

Minimum Leakage Distance	3,075 mm
Insulator Type	Station Post
Applicable Standards	ANSI C37
Grounding Blades	Per Drawing E0035

9 24 3 3 Surge Arresters

The surge arresters for 115 kV system shall be station class, metal oxide varistor type without series gaps, single-pole, outdoor type Voltage rating of the arresters shall be confirmed from system insulation coordination studies

Operating Voltage	115 kV
Maximum Design Voltage	123 kV
Duty Cycle	10 kA
Maximum Continuous Operating Voltage	90 kV L-N
Minimum Leakage Distance	3,075 mm
Discharge Counter	one per arrester
Applicable Standards	ANSI C62 11

9 24 3 4 Capacitor Voltage Transformers (CVT)

Voltage transformers shall be high accuracy, oil filled, single bushing type units The ratings of the CVTs shall be as follows

Operating Voltage	110 kV
Maximum Design Voltage	123 kV
Rated Frequency	50 Hz
BIL Impulse Withstand	550 kV
Accuracy Class	1 2 R (W, X, Y, Z, ZZ)
Applicable Standards	ANSI C93 1

9 24 3 5 Current Transformers

Current transformers shall be in accordance with the following

Type	Bushing
Operating Voltage	110 kV
Maximum Design Voltage	123 kV
Primary Current	Based on breaker rating
Rated Frequency	50 Hz

BIL Impulse Withstand	550 kV
Minimum Leakage Distance	3,075 mm
Ratio	Multi-ratio
Accuracy Class	C 800 (relaying) 0 2S (revenue metering)
Applicable Standards	ANSI C57, IEC 44-6

9 24 3 6 Insulators

Support insulators shall be in accordance with the following

Station Post

ANSI Technical Reference No *	286
BIL Impulse Withstand	550 kV
50 Cycle Withstand-Wet	230 kV
Minimum Leakage Distance	3,075 mm
Cantilever Strength	To be determined during detail design
Tensile Strength	To be determined during detail design
Torsional Strength	To be determined during detail design
Compression Strength	To be determined during detail design

Suspension Type*

ANSI Class	52-3
Minimum Leakage per Insulator Bell	430 mm

Suspension insulators used to terminate the incoming lines shall be designed in accordance with the following minimum leakage distances specified below

Vertical Insulator Strings*	5,100 mm
45 degree Insulator Strings*	4,575 mm
Horizontal Insulator Strings*	4,100 mm

*denotes recommended values to be verified by Contractor

Clamps used with suspension insulators shall be compression type galvanized steel, using stainless steel nuts, bolts, cotter pins and washers

9 24 3 7 Grounding and Shielding

The substation grounding and direct stroke shielding systems shall be in accordance with the following

Switchyard Grounding

Design Standards	IEEE 80, IEEE 81
Ground Grid Conductor, minimum	95 mm^2
Ground Grid Connections	Exothermic Type
Depth of Ground Grid Below Grade	0 5 m
Ground Grid Resistance	0 5 ohms
Ground Fault Current	40 kA
Design Fault Duration	0 5 sec

Substation Shielding

Method	Overhead Ground Wire
Type	7 No 8 Alumoweld

9 24 4 Protective Relaying Systems

The protective relaying systems associated with the 110 kV interconnection to the unit shall be designed in accordance with the requirements of Section 9 7

9 24 4 1 Breaker Trip Circuit Supervision

Each circuit breaker trip circuit shall be equipped with a trip circuit supervision relay Each circuit breaker shall have two trip circuits Each trip circuit supervision relay shall be designed to supervise the electrical continuity in the tripping circuit for breaker open and for breaker closed, and the associated wiring

9 24 4 2 Operational Condition

Direct telephone communication from the CHP Control Room to the CCGT plant control room shall form the basis for dispatch directions

9 25 Generator Circuit breaker (medium voltage 10-18 kV)

9 25 1 General

This section establishes criteria for the generator circuit breaker if provided, to isolate the generator from its associated step-up and auxiliary transformers

9 25 2 System Design Description

9 25 2 1 Generator Circuit Breaker

The circuit breaker shall comply with the requirements of the ANSI Std C37 013

The circuit breaker shall be of three-single pole, SF6 self-extinguishing interrupting single throw, design type, with a pneumatic or a pneumohydraulic high speed operating mechanism and mechanical linkages to open and to close all three-poles of the breaker in synchronous operation Load current carrying contacts shall be silver plates copper, interrupter contacts shall be tungsten copper alloy or graphite Interrupting and insulating medium shall be gas (SF_6) capable of interrupting all currents between 0 and 100 percent of rated interrupting capacity The breaker shall be capable of at least two close-open operations at rated short circuit current or at related required capabilities Gas interrupters shall be self-extinguishing type

The circuit breaker and its associated disconnect switch and grounding switch, CT's and PT's shall be of isolated phase construction, with each pole contained in a separate aluminum enclosure designed to be connected to the aluminum isolated phase bus enclosures, to maintain the isolated phase integrity and provide a physically and electrically continuous enclosure from the generator to the step-up transformer Enclosures shall be able to carry current equal to the phase current in the conductor Enclosures shall be insulated from support structure The flow of cooling air for the isolated phase bus shall not be impeded by the generator circuit breaker, if required

The circuit breaker shall be capable of at least 3000 no-load operations, 10 years of service or 6 interruptions at rated short-circuit current, without maintenance It shall be naturally cooled with maximum temperatures not exceeding the values specified in ANSI C37 04 The circuit breaker shall have separate contact systems for load current carrying and arc interruptions

Instruments shall be provided to monitor the SF_6 gas pressure and alarm on low pressure Low pressure relays shall be provided to

- Trip the breaker when the pressure reaches a value below which full interrupting capacity cannot be obtained

- Open the closing circuits of the breaker if pressure in the tank is insufficient for a close-open operation

- Low SF_6 pressure alarm

- Other alarms as deemed necessary

The capacitators shall be provided on the transformer side and/or generator side, if needed for the control of transient recovery voltage

The pneumatic and/or pneumohydraulic operating mechanism of the breaker shall be mechanically and electrically trip-free and non-pumping Drive mechanism shall have local position indicator

The circuit breaker shall be provided with auxiliary switches such that a minimum of ten independent contacts are available for Owner's use, in addition to those required for the Contractor's control system

Quick-disconnect fittings shall be provided for SF_6 gas handling on each pole

One (1) temperature compensated SF_6 density monitor shall be provided

Loss of SF_6 pressure shall not reduce the breaker's current carrying capability or its ability to withstand normal system voltage while the breaker is in the open position

The operating mechanism functional and control requirements shall be in accordance with ANSI C37 11

The operating mechanism shall be provided with two electrically independent trip coils and all necessary circuits including pressure switches and reset devices to permit tripping of the circuit breaker Each circuit shall be individually fused in both legs and shall be capable of operating normally with or without any voltage on the other circuit

Tripping and closing control circuit mechanism shall each have nominal input DC voltage of 125V, 140V maximum and 105V minimum

The operating mechanism shall be mounted and enclosed in a weatherproof housing

Space heaters with adjustable thermostats and protective devices shall be provided

9 25 2 2 Disconnect Switch

Disconnect switch shall be provided on the step-up transformer side of the circuit breaker Disconnect switch shall have a visible air gap with viewing ports Disconnect switch shall be gang-operated, motor driven, equipped with auxiliary switches, and a position indicator Manual crank handle shall be provided for operation without electric power Disconnect switch shall be key interlocked with the breaker

A disconnect switch associated with the static start system (Gas Turbines) shall be provided on the generator side of the circuit breaker either as an integral part of the circuit breaker or separately with the static start equipment

9 25 2 3 Grounding Switch

Grounding switch shall be provided on the generator side of the circuit breaker Grounding switch shall be gang-operated, motor driven, with viewing ports Manual crank handle shall e provided for operation without electric power Grounding switch shall be key interlocked with the breaker Grounding switch blades shall rotate 90 degrees and make simultaneous contact to the conductor and the ground enclosure with silver plated spring loaded contacts

9 25 2 4 Current Transformers and Potential Transformers

Circuit breaker shall be furnished with (toroidal type) current transformers and potential transformers as required by Contractor's design

The accuracy classes and standard burdens for current potential transformers for metering and relaying shall be in accordance with ANSI C57 13

All current transformer taps shall be wired to accessible short circuiting type terminal blocks located in the control cabinet All current transformer wiring shall be No 10 AWG stranded

9 25 2 5 Control Cabinet

The circuit breaker shall be provided with a control cabinet for housing all electrical, pneumatic or pneumohydraulic control functions required for the circuit breaker operation

All external secondary wiring shall be installed in a weatherproof metal conduit system at the manufacturing facility Control cabinet and conduit system shall be provided with the necessary seals, drains and breathers to prevent the entrance of moisture and to prevent condensation All external wiring shall be arranged to enter the control cabinet from the bottom Top entry is not acceptable

Voltage to control devices requiring manual manipulation shall not exceed 230V ac or 125V dc

All secondary and control wiring shall be identified with wire markers located at each end All wires shall be terminated using ring-tongue type terminal lugs Terminal blocks shall be barrier type with marker strip and terminal cover Terminal points shall be permanently marked and shall be sized to allow a minimum No 8 AWG wire size for the Owner's connections All auxiliary contacts and control wiring shall terminate on accessible terminal blocks All control wire shall be flexible, stranded, tinned-copper, type SIS, rated 600 volts Maximum of two wires shall be terminated on any terminal point Minimum size of control wire shall be No 14 AWG

Control cabinet shall be a NEMA 4, gasketed, completely enclosed, weatherproof enclosure Vertical hinged doors with a locking device shall be provided to hold the door(s) in the full open position Door(s) shall be provided with provisions for padlocking in the closed position Door hinges and latching devices shall be corrosion resistant Control switches and indicating devices shall be mounted on a hinged panel located inside the control cabinet

Control cabinet shall be provided with a gasketed conduit area cover plate in the bottom of the enclosure When breathers are provided to prevent condensation, they shall be located in the bottom of the enclosure and shall be sized to prohibit the entrance of insects

The four-digit operation counter and breaker position indicating devices shall be provided and visible from platform level without opening the front door(s)

A mechanical circuit breaker position indicator device to show the open or closed position of the main contacts shall be provided

All devices located in the control cabinet shall be accessible from the elevated structure provided by Contractor

Control cabinet shall be furnished with the following accessories and controls, in addition to those specified herein

- Key operated Local-Remote Breaker Selector Switch
- Breaker Control Switches arranged for Local Control
- Fused Trip Circuits (two)
- Fused Close Circuit
- Control Power Failure Relays for Tripping and Closing Circuits for Remote Annunciation
- Thermostatically Controlled Space Heaters rated 440V AC and operated at 220 VAC
- Ground Fault Protected Duplex Receptacle rated 230V, AC, 20A
- Interior Incandescent Light Fixture
- Indicating lights for each alarm condition

The key operated Local-Remote Breaker Selector Switch shall be provided with key removable only in the "Remote" position The key shall be kept with the Plant Control Room Operator The "Local" position of the Local-Remote Selector Switch shall be annunciated in the plant DCS The local Breaker Control Switch shall only be able to exercise the circuit breaker when the Local-Remote Selector Switch is in "Local" and the disconnect switch on the transformer side is in the open position

Circuit breaker control switches shall have pistol grip handle, target type escutcheon, be rated 600 V, 20 amp continuous duty, with an interrupting rating over the full range of control voltage (105-140 Vdc)

The red and green indicating lights with resistors suitable for operation over the entire range of control voltage (105-140 Vdc) shall be furnished Green lights shall be powered from the trip circuit to monitor tripping voltage prior to closing the breaker Red lights shall be connected to monitor trip coil continuity Each trip coil shall have a separate red light

9 25 2 6 Mounting Structures

Contractor shall design and supply an elevated steel structure to enable circuit breaker to be installed in-line with the isolated phase bus duct Contractor shall also provide an access platform to span all three phases, and ladder(s) for personnel access to platform(s)

Structural steel for the elevated support structure shall conform to ASTM A36

All connections shall be welded or high-strength bolted Welding shall be in accordance with AWS D1 1 High strength bolts shall be in accordance with ASTM A325

The elevated support structure shall be designed to withstand the wind and seismic loading applicable to the site

All access provisions shall be in accordance with OSHA requirements, as specified in 29 CFR, Section 1910

9 25 2 7 Nameplates

A stainless steel nameplate shall be affixed to each piece of equipment furnished by the Contractor It shall bear the rating and other essential operating data and shall include reference to installation and operating instructions

Laminated plastic nameplates shall be provided for all devices located inside the control cabinet Each nameplate shall be 3/32 inch minimum thickness, 1 inch high and 3 inches wide The plate shall be white with minimum 3/16 inch high engraved black lettering Each nameplate on the exterior of the cabinet door, or interior of control cabinet shall be fastened with a minimum of two stainless steel screws

SECTION 10 0

INSTRUMENTATION AND CONTROLS TECHNICAL REQUIREMENTS

Section	Title	Page
10 1	General Requirements	C10-1
10 2	Codes and Standards	C10-1
10 3	Overall Plant Control and Monitoring	C10-2
10 4	Control Systems	C10-3
10 5	Process Instrumentation and Controls	C10-12
10 6	Continuous Emissions Monitoring System	C10-17
10 7	Water and Steam Sampling System	C10-18
10 8	Vibration Monitoring System	C10-19
10 9	Instrument Installation	C10-19
10 10	Combustible Gas Detection System	C10-20
10 11	Fuel Gas Calorimeter System	C10-20
10 12	Ambient Monitoring Systems	C10-21

SECTION 10 0 - INSTRUMENTATION AND CONTROLS TECHNICAL REQUIREMENTS

10 1 General Requirements

The design of all instrumentation and control systems shall provide maximum security for plant personnel and equipment while safely and efficiently operating the plant under all conditions with the highest possible availability

The design of the control system for the plant shall utilize a microprocessor based distributed control system(DCS) in combination with proprietary controls furnished with the CT's and ST CRT control consoles shall be used for the primary plant operator interface The CRT console shall contain four CRTs, a minimum of two keyboards, and cursor controls and in general allow the use of two plant operators The third party control systems supplied with the major plant components shall be tied into the DCS with redundant serial communications links and hardwired signals for critical control signals Those remaining control and monitoring signals for Balance of Plant (BOP) applications and the HRSG's and their associated system/components shall be brought directly into DCS I/O cabinets CRT display graphics shall provide the operator with control, monitoring, recording/trending, status, and alarming of equipment and process conditions The DCS cabinets shall be either centrally located in the Control Room area or remotely throughout the plant grounds to utilize the system data highway in lieu of the installation of large quantities of instrumentation and control cabling

The instrumentation and control devices utilized shall be standardized to the greatest extent practical

The large rotating machinery on this project, namely the Combustion Turbines/Steam Turbine/Generators (CT/ST) and the boiler feed pumps shall be equipped with vibration monitoring sensors A Water and Steam Sampling Panel shall be required for monitoring the contents of the steam and water cycle portion of this plant A combustible gas detection system shall be provided at the gas compressor area, the gas analyzer enclosure and along the route of the gas supply line in the plant area to alert the plant operator of a fuel gas leak via the DCS

The Electrical Distribution System shall be controlled from the Electrical Distribution Control Panel (EDCP) as well as from the DCS Electrical equipment status and alarms shall be sent to the DCS via communications links and/or hardwired inputs The generator breakers shall be controlled via the automatic synchronization provisions in each turbine generator control system

10 2 Codes and Standards

American National Standards Institute (ANSI)

387

American Society of Mechanical Engineers (ASME)

Institute of Electrical and Electronic Engineers (IEEE)

Instrument Society of America (ISA)

National Electrical Manufacturers Association (NEMA)

National Fire Protection Association (NFPA)

10 3 Overall Plant Control and Monitoring

10 3 1 Overview

The Plant shall be controlled from operators' consoles located in the control room This DCS operators' console shall be the primary operator interface for control and monitoring the plant Additional operator/engineer consoles shall be provided in this area for the CT's and the ST Supplementary, local control facilities shall also be provided for the CT's and ST The DCS shall provide monitoring for the Water Treatment System (WTS) which is normally controlled locally The Electrical Distribution System shall be normally controlled from the hardwired EDCP which has a mimic of the system In addition, this electrical equipment has its status displayed and performance monitored by the DCS

The Turbine Building shall have a dedicated, environmentally controlled area that will serve as a central location for plant control and monitoring The operators' consoles and associated printers along with the EDCP shall be arranged in a manner to fully support the safe and efficient operation of the plant These primary control facilities shall be suitably isolated within this area to eliminate any distractions to the operators The DCS engineers workstation and its printer and the CT's and ST control system printer shall be located in an area adjacent to the primary plant control facilities but not directly in that isolated area Furthermore the control/electronics area shall house DCS input/output and electronics cabinets and other miscellaneous plant control and monitoring hardware Remote DCS I/O and Electronics cabinets shall be located in environmentally controlled enclosures to minimize the effect of ambient conditions on the sensitive hardware

Refer to Control System Block Diagram, Drawing No IC-1 for conceptual layout of the control system This drawing is for illustration purposes Variations due to site conditions, vendor conventions and design development must be incorporated in Contractor's design

10 3 2 Plant Control and Monitoring Philosophy

The plant shall be capable of producing electricity in combined cycle mode which shall require that the control and monitoring of the CT, ST, HRSG and the BOP are integrated via the DCS

The plant control system shall have the capability of automatically starting the plant from cold shutdown and bringing the CT/ST up to speed along with HRSG warm-up and increasing steam production Alternate, selectable start sequences shall be available when restarting from a warm or hot condition The loading of the generators shall be accomplished manually by the plant operator in response to the electrical load demand The control system shall also be capable of automatically shutting down the plant in an orderly manner Although each of these major plant components have their own autonomous control system, the DCS shall be the control and monitoring focal point for combined cycle operation

The plant's steam cycle shall be designed to prevent the induction of water into the ST and its related components ASME Standard TDP-1 addressing this subject shall be complied with

The CT's, ST, HRSG's and GCS shall be complete with instrumentation provisions to perform performance testing in accordance with the requirements of the ASME Performance Test Codes

10 4 <u>Control Systems</u>

10 4 1 Third Party Control Systems

Third Party Control Systems are those control systems provided to control and monitor large equipment and stand-alone process systems and their associated components The Combustion Turbine (CT), Steam Turbine (ST), Gas Compressor(GC), Water Treatment System(WTS), and Sodium Hypochlorite System (SHS) shall each have a third party control system

These control systems, except for the CT and ST, shall be constructed of industry standard programmable logic controllers (PLC) or approved equal The control systems for the CT's and ST shall be in direct communication with the DCS via redundant communications links Additionally, some hardwired control signals shall be exchanged between the DCS and the control systems of the CT's and the ST for critical signals The DCS is required to support the integrated operation of the major third party control systems Interlocks between these control systems and the DCS that are critical to continued operation of the plant shall be hardwired to ensure that a communications failure shall not compromise these interties or the protection of any plant component

389

The operators' console (or an auxiliary panel in the operator's area) shall also be hardwired with an CT/ST emergency manual stop/trip switch The GC control system shall utilize a single communications link to the DCS for supervisory control and monitoring, however, this system shall be normally operated locally The WTS and SHS control systems shall utilize a single communications link to the DCS for monitoring only and will be operated locally The GC, WTS and SHS controls shall be powered from a single power source

The CT's and ST control systems shall have a local operator station located with the system processors in the turbine electronic equipment cubicle to provide a local alternate location for operating the turbine Alternate means for controlling systems or components shall have security protection to assure that unauthorized or unsupervised operation is not available The control system for the STG shall comply with requirements of IEEE Standard 122

Third party control systems shall be configured with latest proven revision of the contractor's software available at the time of the Factory Acceptance Test for each system First generation software shall not be provided A minimum of 2 years field experience with the proposed software release is required The system configuration shall be retained on commercially available magnetic or optical disc and shall be installed via the system's workstation This workstation shall have the capability to make changes to the system configuration while the plant is on-line Advanced software releases shall be made available to the Owner as they become commercially available

The GC, WTS and SHS control systems shall have local control panel to fully support the operation and maintenance of the system The panel shall be located in an area immediately adjacent to the equipment served and shall have a means for preventing unauthorized operation These local operators panels shall utilize industrial grade, environmentally hardened, CRT(s) for control, monitoring, and alarming A hardwired trouble alarm shall transmitted to the DCS in the event of any control system trouble including loss of communications to the DCS The GC, WTS and SHS control systems shall be fully capable of operation independent of the DCS

Third party control systems that interface with the DCS shall have a response time to a control system input or command signal through that communications pathway in two seconds or less Control system hardware shall be capable of on-line replacement of components and have a full library of diagnostics to support prompt identification of system hardware and software failure(s) Additionally, system set points, tuning parameters, and control constants shall be adjustable while the control system is on-line

The interface of these third party control systems to the DCS shall utilize industry standard communications hardware and software These communications facilities shall

be the equivalent of the communications facilities in the DCS and function in a manner as to not compromise the safe and reliable of the plant nor the DCS

All third party control systems shall have a Factory Acceptance Test (FAT) performed at the Vendor's shop to establish compliance to the system's operational requirements as well as hardware performance The communications interface with the DCS shall also be tested to confirm link operability and systems integration The test shall be performed either with the actual DCS or the Employer's approved equivalent All tests shall typically include the simulation of system inputs and monitoring of outputs to verify the system's functionality

10 4 2 Distributed Control System

A microprocessor based DCS shall be the primary means for controlling the HRSG and associated Balance of Plant (BOP) systems during all operating conditions Microprocessor speed and memory availability shall be established by the Contractor, for Owner's approval

The DCS shall implement both closed and open loop control to bring the plant from cold start, up to the desired operating condition, and back to cold shutdown After synchronization from the turbine control system(s), the DCS operator interface shall be used to increase the load on the CT's/ST It shall include all interlock and control functions to sustain continued operation in the event of all postulated transients

The DCS shall also monitor, display, and record process data received from field sensors and through communications links This information shall be used for general process supervision, execution of plant and equipment performance calculations, historical recordkeeping/trending including sequence of events recording, and diagnostics for management and maintenance of the plant

The DCS shall be constructed in a manner so that no single hardware or software failure will result in a reduction or loss of system performance The DCS hardware and software shall be of a product line and release which have a minimum of 2 years field application experience in similar installations

The DCS shall have a high level of self diagnostics that are accessible from the operators control console and the engineer's workstation These diagnostics shall provide clear and unambiguous indication of component failure at any level of the system operation System trouble shooting and maintenance shall be normally be performed from the engineer's workstation

DCS remote cabinets containing system I/O modules, control processors, communications modules and third party control system communications links, shall be located at strategic areas throughout the plant to reduce hard cabling requirements and

replace it with digital, fiber optic data highway Locations shall be based on the concentration of input/output signals

10 4 2 1 Process Controllers

The DCS shall utilize redundant control processors that are physically independent yet identical in control programming configuration One processor shall act as the primary while the other shall act as the backup The backup processor shall automatically without "bump" and without loss of control/monitoring capability be placed into service on the failure of the primary processor and an internal DCS alarm shall be initiated Upon correction of the faulted condition, the two processors shall automatically resume their primary and backup roles

The system shall have a thirty percent (30 %) spare capacity in each process controller for programming expansion The final spare capacity shall be determined at the completion of the Factory Acceptance Test It shall also be possible to further expand both the system's hardware and software capacity by another twenty-five percent(25 %) through the addition of new hardware

10 4 2 2 Input/Output Modules

The DCS shall be capable of accepting the following input and output signal types, as a minimum

- Analog Input 4 - 20 mA
- Analog Output 4 - 20 mA
- Digital Input 24 VDC or 125 VDC or 120 VAC
- Digital Output 24 VDC or 125 VDC or 120 VAC
- Thermocouple Input Type E or Type K mV
- RTD Input 100 Ohm Platinum or 10 Ohm Copper

Analog inputs (4-20 mA) and digital inputs and outputs shall be capable of powering directly from the DCS or from an outside source The selection of power source shall be achievable without requiring additional components

Digital input/output modules shall have status lights to indicate when each point is active DCS inputs and outputs shall be isolated from each other Each I/O module shall be fully compatible with the signals which they receive/transmit without the addition of external components

The status of plant equipment that is vital to the operation of the plant and the electrical distribution system shall be designated as a Sequence of Events (SOE) point thereby requiring that that point be given a high time resolution, status alarm These SOE

points shall be time stamped to within a resolution of one millisecond for post trip analysis A minimum of one hundred (100) points shall be available as SOE points

The quantities of inputs and outputs to/from the DCS shall be based on the actual count of points as determined during the design phase of the plant A twenty percent (20 %) quantity of spare I/O modules and field terminations shall be provided for each I/O type specified These spares shall be distributed throughout the DCS The final spare capacity shall be determined at the completion of the Factory Acceptance Test

10 4 2 3 Communications Modules

Redundant data highways with interface ports shall be provided for communications between DCS cabinets and components Both data highways shall operate simultaneously so that in the event of the failure of one highway, the other shall continue to function under any normal or upset conditions These data highways shall be installed physically separated from each other to preclude common physical damage Data protocol used shall safeguard against false data transmission, allow for error detection, failure detection/recovery as well as automatic switchover to the redundant highway Those third party control systems having redundant communications links shall have automatic and bumpless switchover to the backup link in the event of a failure An internal DCS alarm shall be initiated upon the detection of a failure of the data highway and/or a communication link to a third party control system

The interfaces to third party control systems shall be industry standard communications configurations The hardware to interface these systems to the data highway shall reside in the DCS system cabinets

10 4 2 4 DCS Power Supplies

The DCS components which are vital to the system's continuous operation shall receive power from two independent power sources One power connection shall be from the plant Uninterruptible Power Supply (UPS) and shall act as the primary while the other shall act as the backup The backup power connection shall automatically be placed into service bumplessly on the loss of the primary power and an internal DCS alarm shall be initiated Upon the resumption of power to the primary power connection, the two connections shall automatically resume their primary/backup roles DCS components that do not perform a vital role such as the system printers and engineers' workstations, shall be fed from a single source of Uninterruptible Power

The power supplies to the DCS shall be fed through separate circuit breakers and suitably conditioned to protect the DCS from supply system transients

The DCS shall provide redundant internal power supplies to power system electronics and also support powering of both analog and digital I/O An internal DCS alarm shall be initiated on the loss of primary power supply

The *interrogation* voltage for field control devices shall be 24 VDC or 220 VAC Digital I/O points shall also be capable of receiving/transmitting 220 VAC and 125 VDC The DCS shall provide the 24 VDC power to operate all analog loops

10 4 2 5 Hardware Requirements

The DCS and its components shall be designed to operate under all normal and potentially abnormal conditions These abnormal conditions shall include the loss of environmental conditioning, under and over voltage transients, power supply noise, and RFI interference The DCS equipment shall be designed in accordance with ANSI Standard C37 90 1 and C37 90 2

The DCS shall be designed to operate without loss of performance or data and without damage to hardware under the following conditions

<u>Control/Electronics Room</u>	
Temperature	23 9°C Normal 48°C Loss of HVAC
Humidity	60 Percent Normal 95 Percent Loss of HVAC
<u>Outdoor Areas and Process Areas Within Building</u>	
Temperature	3°C - 43°C
Humidity	100 Percent

Remote DCS cabinet(s) shall be housed in available environmentally conditioned buildings wherever possible or environmentally conditioned, walk-in control enclosure(s) These control enclosures shall be provided by the plant contractor The conditioning equipment in these buildings or enclosures shall maintain the DCS hardware within the manufacturer's prescribed operating limits

All DCS cabinets shall be rated as NEMA 1 minimum and have top cable entry

The CRTs shall be highly reliable, high resolution color units that allow the operator to adjust them to the ambient lighting conditions and their own viewing requirements The CRTs shall also have touch screen capabilities and be highly responsive to the operators interrogation A double control action shall be used to insure proper selection of any function Although the operator(s) may select one specific CRT to be used for one function, any CRT maybe selected for any function Background

information shall be presented in less than two seconds on the CRT screen with process information refresh rates being rapid enough to ensure that the operator has updated information for timely control actions The system response to operator commands or changes in field input signals shall be one second or less

The operators' console shall be ergonomically designed to reduce operator's fatigue, protect the operator's eyesight, and eliminate repetitive strain injures Keyboards and cursor controls shall be ruggedly designed and spill proof Console and system cabinets shall be of the same modular design and painted the same color Each unit shall have an adjustable height capability to account for floor unevenness

Hardwired manual stop/trip control switches shall be centrally mounted near the operators to allow quick access Similarly, HRSG drum level indicators (supplied as part of the that equipment package) shall be mounted in a manner to provide the operators with clear and unambiguous reading

An engineers' workstation shall be provided for system programming, maintenance and troubleshooting as well as any engineering functions associated with the DCS such as performance calculations The engineers workstation and its associated printer shall be located in an area adjacent to the primary plant control area

Three printers shall be provided for the operators use One color printer shall be operator selectable for general logging or trending Another color printer shall be used for alarm logging including SOE points The third color printer shall be an operator selectable, video printer capable of reproducing DCS graphical displays A color printer also capable of reproducing DCS graphic displays shall also be provided for the engineers workstation

Each data highway cable shall be routed in a dedicated, metallic conduit to ensure the system's communication integrity

10 4 2 6 Alarms

The DCS shall be used for displaying all plant alarms on the operators console

All alarms or groups of alarms shall remain active until acknowledged and reset after the condition has cleared Control console keyboard facilities and CRT soft pushbuttons shall be provided for alarm acknowledgment and resetting as well as for the testing of the alarm system in the DCS An adjustable, audible warning shall be sounded on the occurrence of any alarm or group of alarms All alarms shall be logged on the dedicated alarm printer and also shown on the CRT alarm listing

The DCS shall have the capability of intelligent alarming for elimination of nuisance alarms on off-line equipment Alarm prioritization based on levels of alarm severity shall be included in the DCS

All analog inputs and computed values shall be provided with programmable high and low process limits and variable rate of change that alarm when exceeded

10 4 2 7 CRT Graphical Displays

The DCS graphical displays shall as a minimum consist of the following types

- Selection (Menu)
- Overviews
- Alarm Listing
- Process/Systems
- Recording/Trends
- X-Y Graph
- Controller (Group and Detail)
- Hand Switch (Group and Detail)

Selection display(s) shall provide the system operator with a means of easily navigating between all the other possible displays The Contractor, Owner and Vendor shall decide upon the presentation colors for each display Text shall be in Russian

Overview graphic displays of the plant and major equipment shall be provided as a means of summarizing the operation of the plant and its equipment

The Alarm Listing display shall include all active alarms in the order they were received and with the latest alarm appearing at the top of the list New alarms shall be displayed in the blinking mode until acknowledged by the operator then shall become steady As an alarm point returns to normal, the operator will reset that point and it shall be automatically removed from the listing

Process/System display graphics shall be in the form of the plant system process and instrumentation diagrams These graphics shall show the process flow path with the system equipment and augmented with the current measured process variables, equipment status, and alarms The graphics shall also include operator's selection points or hot spots that request a hand switch or controller display graphic faceplate These control faceplates are used to initiate a control function

Recording/Trending display graphics shall be CRT presentations of recorders for process variable recording or trending A minimum of eight parameters shall be monitored on each graphic display screen

X-Y Graphs shall be provided for plotting one parameter as a function of another parameter Real time process data shall be indicated on this display

Controller graphical displays shall be furnished for each analog control loop The display shall mimic a typical PID controller faceplate with the associated parameter indications and selection/adjustment capabilities

Hand Switch graphical displays shall be furnished for each digital control circuit The display shall mimic a typical hand switch with means to select the control status of the equipment being controlled The actual status of the component shall be included in this display

10 4 2 8 Logging

The DCS shall have the means to produce a variety of logs on the system printers Log shall be available for the following

- Change of equipment status
- Sequence of Events reporting including the actual time of event
- Post trip
- Operator selectable logs
- Operator's actions log for up to eight hours
- Periodic operating parameter logs

10 4 2 9 Historical Storage and Retrieval

The DCS shall have the facility for historical storage and retrieval of plant data After scanning and input to the system, all variables, both analog and digital, shall be stored in a non-volatile short term memory At a predetermined time, this data shall be capable of being downloaded to a long term storage media Short term memory shall have a minimum capacity of six months storage of all data Long term data storage shall be implemented in a manner which prevents the possibility of stored data being erased without a backup

10 4 2 11 Software

The DCS shall be configured with the latest proven version of the contractor's software available at the time of the Factory Acceptance Test First generation software shall not be used in the DCS The system configuration shall be retained on commercially available magnetic or optical disc and shall be installed from the engineers workstation This workstation shall have the capability to make changes to the system configuration while the plant is on-line System hardware and software shall include security provisions to prevent unauthorized configuration changes The system configuration shall be retained in non-volatile memory which shall not be affected by temporary external power interruptions During the warranty period, the DCS contractor shall provide notification and installation of all software upgrades as they become available Each upgrade shall be subject to the Employer's approval prior to installation

10 4 2 12 System Testing

The DCS shall have a Factory Acceptance Test (FAT) performed at the Vendor's shop to establish compliance to the system's operational requirements as well as hardware performance This test shall include simulation of system inputs and monitoring of outputs to verify the system's functionality The Site Acceptance Test (SAT) shall be performed to demonstrate all the capabilities of the DCS including a verification of the system's operational availability The DCS shall have an operational availability to perform all control and monitoring functions of greater than 99 97 percent as determined by a six (6) month operational test The test shall commence at a time mutually agreed to by the Employer and the Contractor Availability is defined as the duration of the test minus the accumulated system downtime divided by the duration of the test times one hundred Failure of a component shall not be counted against the availability if the failure is alarmed and the redundant component performs the control functions with no loss of performance

10 5 <u>Process Instrumentation and Control Devices</u>

Instrumentation and control devices shall be used to sense, indicate , transmit, and control process variables as required for safe, efficient, and reliable operation of the plant and its systems and components All I & C components shall be standardized i e , manufacturer, model number, family, to the greatest extent possible with particular emphasis being placed on those devices that are critical to plant operation and/or widely used throughout the plant This requirement shall be applied to third party system devices as well as BOP devices Transmitters working with the DCS shall be used whenever possible to replace process type switches for control applications All electronic devices shall be designed for immunity to EMI interference and noise in accordance with IEEE Standard C37 1

Process instrumentation and control devices shall be shown on the Contractor's system Piping and Instrument Diagrams(P&ID) using ISA Standard S5 1 nomenclature These components shall be specified for procurement using ISA Standard S20 specification forms or approved equal Terminology used for instrumentation and control devices shall utilize ISA Standard S51 1 as a basis for common understanding Instrumentation and control devices shall comply with general requirements stated in NEMA Standard ICS 1 and the specific requirements stated in NEMA Standard ICS 2

10 5 1 Field Instrumentation Requirements

10 5 1 1 The wetted parts of process instruments shall be constructed of material(s) that are compatible with the process thereby providing long life Movements shall be fabricated from stainless steel except for corrosive service where more appropriate materials shall be used

391

10 5 1 2 Process isolation or root valves shall be provided for each instrument takeoff Double isolation valves shall be required for high temperature and pressure applications All insertion type temperature sensors shall be furnished with a thermowell Pigtail siphons shall be used for steam applications, pressure snubbers for pulsating pressure/flow applications, and chemical diaphragm seals for corrosive/hazardous applications All connections to the process line or vessel shall be made up in a manner that is consistent with that of that line or vessel i e socket welded for welded line, threaded for flanged or threaded line, etc All devices that are directly connected with the process line or vessel shall comply with ANSI Standard B31 1

10 5 1 3 Instruments' ranges shall be selected based on the calculated process condition with the normal operation condition being at less than eighty(80) percent of full scale and the maximum operating condition being at less than ninety five(95) percent of full scale Instruments with an integral setpoint shall have their actuation point at approximately sixty(60) to seventy(70) percent of full scale All instruments shall be furnished fully calibrated with the setpoint fixed at that equipment manufacturer's facility and shipped ready for installation Instruments shall be capable of withstanding sustained overpressurization to one hundred fifty(150) percent of the maximum process pressure

10 5 1 4 All instruments and control devices shall be suitable for outdoor applications and have a metal enclosure with a rating of NEMA 4 Enclosures shall comply with the requirements stated in NEMA Standard ICS 6 Instruments not directly attached to a process line or vessel shall be mounted on a local instrument rack or on a suitable instrument support

10 5 1 5 A non-corroding metal identification name plate shall be permanently attached to each instrument and control device This nameplate shall be stamped with that device's instrument tag number as shown on the Contractor's system P&ID

10 5 1 6 The contact rating of a switching device shall be 5 amps at 220 VAC for general control applications or 1 5 amps at 220 VAC for low current applications i e , DCS inputs and 0 4 amps resistive for 125 VDC applications All contacts shall be DPDT unless otherwise specified Switching devices shall comply with IEEE Standard 472 for surge resistance capacity

10 5 1 7 Polyvinylchloride material shall not be an acceptable material for component construction Mercury shall not be used in instruments

10 5 1 8 In general, transmitters shall be 4-20 mA DC two wire, solid state SMART type Rosemount model 1151 SMART transmitters or approved equal shall be used to the greatest extent possible to standardize on this vital instrument type In applications where process control or system conditions require specific performance requirements that are not available using the plant standard transmitter shall use an alternate transmitter Transmitters shall be powered from an external DC source and the DCS is that preferred source

Transmitters shall have an accuracy of +/- 0 25 percent of the calibrated range or better Their repeatability shall be 0 05 percent or better

3 49

All transmitters shall have zero and span adjustments that are accessible without dismantling the unit All differential pressure transmitters shall also have zero elevation and suppression capability

10 5 1 9 Pressure test points shall be provided upstream and downstream of each piece of equipment that can affect process pressure i e , pump, filters, heat exchangers, etc Pressure test points shall be individually valved such that their operation does not affect the operation of any other pressure sensing device

10 5 1 10 Temperature test points shall be provided upstream and downstream of each piece of equipment that can affect the process temperature i e , large pumps, heat exchangers, coolers, etc Thermowells shall be installed in all locations requiring temperature test points Thermowells shall be also be installed at locations to support the requirements for ASME performance testing

10 5 1 11 Flow test points shall be provided as required to support system flow balancing and ASME performance testing Averaging type pitot tubes shall be used for flow balancing

10 5 1 12 The plant instrument air system shall be designed to provide the pneumatic instrumentation and control devices with high quality air ISA Standard S7 3 shall be used in the design and implementation of the instrument air system

10 5 2 Control Valves

Control valves shall be provided where the process system requires modulation of flow, level, pressure, temperature, etc to meet the operational needs Control valves shall consists of a valve body, pneumatic actuator, positioner and all required accessories needed for accurate and reliable process control Control valves shall be either globe, butterfly, eccentric disc/plug, or ball type The actual valve type selected and the control valve trim characteristic shall be selected based on the service conditions of each specific control application Control valves shall be sized using the equations specified in ISA Standard S75 01 Control valve sizing shall consider range of operating conditions i e , minimum, normal, maximum, to ensure suitable valve capacity, trim selection, and process rangeability Control valve noise generation may be predicted using ISA Standard S75 17, lagging or alternative design may be required to comply with overall plant noise requirements Control valves shall be hydrostatically tested in accordance with ISA Standard S75 19

Pneumatic diaphragm or piston actuators shall be designed to provide sufficient motive power to open or close the valve against maximum system shutoff differential pressure Valve actuators in line sizes of 100 mm or higher shall have a manual means for operating the valve i e , handwheel Control valves shall move to the pre-determined failure position specified on a loss of air supply, i e , open, cloe, or maintain last position

400

Level transmitters shall be either of the differential pressure type, float type (external cage or flange), or capacitance (flange or threaded) Level transmitters shall have a full scale accuracy of +/- 0 5 percent or better and a repeatability of 0 1 percent or better

10 5 5 Pressure and Differential Pressure Instruments

a Pressure and Differential Pressure Indicator Gauges

Pressure and differential pressure indicators shall have a 150 mm (6 in) in diameter dial with black graduations and pointer on a white face Pressure measuring indicators shall be bourdon tube type and the indicators for vacuum services shall be a bellows type Differential pressure indicators shall be either of the bellows, piston, bourdon tube, or diaphragm (for low pressure) types Gauges shall be suitable for pipe or surface mounting with the process connection at the bottom of the case Lens shall be shatterproof glass or plastic The indicator shall have a gear and pinion movement and shall be adjustable for calibration without removal of the dial The accuracy of Bourdon tube type indicators shall be +/- 0 5 percent of full scale and the accuracy of bellows type indicators shall be +/- 1 0 percent of full scale Furthermore, differential pressure indicators shall not be damaged in the event that the process pressure to any one side of the sensing element is lost

b Pressure and Differential Pressure Switches

Pressure and differential pressure switches shall be either of the bellows, piston, or Bourdon tube type The setpoint adjustment shall be internal with some means of tamper proofing provided Pressure switch accuracy shall be +/- 0 5 percent of full scale or better and shall have a repeatability of 0 5 percent or better The effects of ambient temperature , mechanism deadband, and external vibration on the switch's performance shall be minimized

10 5 6 Process Analyzers

Process analyzers shall be used to measure the level of specific fluid constituents such as pH, Conductivity, Dissolved Oxygen, etc Analyzers shall be the latest state of the art design utilizing programmable microprocessor based technology Analyzer shall be furnished complete with all necessary hardware for a complete installation Analyzers shall produce both an analog signal suitable for transmission to the DCS and have two isolated contact outputs that are programmable adjustable for alarm purposes

10 5 7 Temperature Instruments

Local Temperature Indicators

Local temperature indicators shall be direct reading, universal head, bimetallic type The head shall be a 100 mm diameter dial with black graduations and pointer on a

white face with a plastic lens The accuracy of the local temperature indicator shall be +/- 1 0 percent of full scale or better

Temperature Sensors

Thermocouples and resistance temperature detectors (RTD) shall be used for monitoring equipment and process temperatures Thermocouples shall be grounded type and shall conform to ANSI Standard MC96 1 Actual element material selection shall be based on application Cold junction compensation shall be provided at the signal receiving end RTDs shall be three wire type and shall be either 100 ohm at 0 degrees Platinum or 10 ohms at 0 degrees Copper All temperature sensors shall have duplex elements that are spring loaded and wired to a terminal block in the sensor's NEMA 4 head The accuracy of these temperature sensors shall be +/- 0 4 percent of full scale or better

Tip-sensitive RTD's shall be installed in the bearing metal of all rotating machinery rated in excess of 75 kW RTDs shall be installed in the stator windings of all motors rated in excess of 75 kW Temperature sensors for bearing and motor winding shall be duplex elements

10 6 Continuous Emissions Monitoring System

The Continuous Emissions Monitoring System (CEMS) shall analyze, monitor, and record the concentrations of various substances that are present in the exhaust gases for the main plant stacks The CEMS shall measure the concentrations of Sulfur Dioxide (SO_2), Oxides of Nitrogen (NOx), Oxygen (O_2) and Carbon Monoxide (CO) The CEMS shall be a stand-alone system with the capabilities to extract/condition the exhaust gas sample, transport it to the analyzers, perform the appropriate analysis, record the findings, and generate the required reports

Each stack shall have an appropriate flow measuring capability for quantifying the emissions release rate of each measured constituent A permanent, environmentally controlled building shall be provided to house all the system components Each stack shall have emissions monitoring capabilities that is consistent with the operational usage of that stack

The analyzers for SO_2, NO_x, O_2, and CO shall be either dilution extractive or pure extractive type The smoke density or opacity (particulate) monitor shall be an in-situ type Each analyzer shall be provided with on-line calibration capability that shall be automated Each analyzer shall have a 4-20 mA output representing the concentration of the parameter measured and two programmable high/low digital outputs for inputting to the DCS Actual concentration of effluents shall be transmitted to the operator via the DCS as required for administrative control functions i e , modulation of CTG water injection rate when firing liquid fuel to control NOx emissions The analyzers and associated equipment shall be powered from the plant uninterruptible power supply

102

The sampling and analyzer portion of this system shall have a trouble alarm output and shall be connected to the DCS

A personal computer based Data Acquisition System shall be provided and shall have the capability of generating plant emissions reports This subsystem shall be powered from a clean normal plant source A subsystem trouble alarm shall be provided and connected to the DCS

The equipment provided shall have the highest availability possible based on proven field experience No first generation equipment shall be supplied

The CEMS shall accurately measure and report in appropriate units, the emissions products/release rates of the plant in compliance with the requirements of all national codes and standards

10 7 Water and Steam Sampling System

The Water and Steam Sampling System(WSSS) shall monitor chemical concentrations of the indicated substances for the following process points to minimize the effects of corrosion on the water and steam cycle components and equipment

- Cycle makeup water(Water Treatment System effluent) - Sodium, Silica, Specific Conductivity
- Condensate pump discharge - Sodium, Cation Conductivity, Dissolved Oxygen
- Economizer inlet - pH, Specific Conductivity, Cation Conductivity, Hydrazine
- Boiler water (each pressure level) - pH, Cation Conductivity
- Saturated steam - Cation Conductivity, Sodium
- Superheated steam - grab sample only
- Condenser hotwell (each section) - Cation Conductivity
- Circulating water - Chlorine Residual, pH

Samples shall be withdrawn from the above sample points and transported via stainless steel lines to a conditioning panel where the samples are prepared for analysis, i e , pressure and temperature reduced to meet the needs of the analyzers and good analytical practices A separate panel containing the analyzers shall distribute the process fluids for testing then return the liquid to an appropriate vessel for return to the process or to waste Each sample shall have a grab sample connection to support laboratory analysis/analyzer calibration The analyzers shall transmit the measured values of each parameter to the DCS using hardwired signals The panels used for Water and Steam sampling shall be located at an indoor location that is suitable for chemical laboratory operations

10 8 Vibration Monitoring System

The boiler feed pumps shall be equipped with sensors and associated hardware that supports a vibration monitoring scheme This scheme as applied to the these machines shall consist of standard hardware that can be integrated together to provide the plant operator with accurate vibration measurements and the plant staff with a means of assessing the mechanical condition of this rotating machinery The information received and/or processed by this system shall be used for the development of a preventative maintenance program

The CTs/ST shall be equipped with a comprehensive bearing vibration, shaft position and differential expansion monitoring system which provides continuous monitoring for equipment protection as well as information for preventive maintenance

Each sensor shall input to a field mounted or centrally located rack of monitors that interface with the DCS via a serial communications link and also with hardwired critical control and status signals The vibration monitoring system shall identify bearing conditions that may lead to catastrophic machine failure and trip the effected machine before such a failure can occur

10 9 Instrument Installation

Field mounted instrumentation and control devices shall be located in areas that are freely accessible for maintenance/calibration without impinging on the access to other plant equipment These locations shall be free of mechanical vibrations and widely varying environmental conditions Indicating instruments that are directly connected to process lines or vessels shall be clearly visible from the adjacent operating area Components that are not line or vessel mounted, shall be mounted on local instrument racks or individual supports and connected to the measurement source with stainless steel tubing or pipe Instruments shall not be located in areas classified as hazardous unless they are appropriately rated to the proper NEMA classification Racks shall be configured in a manner to consolidate multiple devices in the same plant area to a centralized location for cable routing and to facilitate equipment serving The locations chosen for these racks shall also consider the length of instrument impulse line and the subsequent effects on instrument response time(s) In those situations where it is not appropriate to use this rack mounting concept i e , one or two devices present, then a structurally sound, local instrument floor stand or wall mounted support shall be used Supporting materials used for instrument impulse tubing or piping and racks/local supports shall be constructed of welded structural steel members that are coated with a corrosion inhibiting paint or galvanized

Instrument installation shall be designed for proper sensing of the intended process variable Taps on process lines shall be located in such a manner that the impulse lines for water services are free from entrapped air and impulse lines for air or gas services are free from liquid Impulse lines for steam services shall be installed so that they will

404

collect water or allow the line to be filled with water from an external source These lines shall then be subject to the same criteria as water filled lines above The connection of impulse lines to the high temperature process lines shall have provisions to allow for the thermal growth of the process line and also the impulse line

All process line takeoffs for instrumentation applications including test provisions shall have a suitable isolation valve or two for high temperature/pressure installations Each instrument shall have its own isolation valve(s) in close proximity to the instrument An additional valved connection shall be provided between the instrument isolation valve and the instrument for testing/in-situ calibration Differential pressure instruments shall have a three valve manifold and test connections in close proximity to each instrument

Instrument impulse lines shall use seamless stainless steel tubing with a 13 mm O D and compression type tube fittings such as Swagelok or an approved equal Only one manufacturer's fittings shall be used throughout the plant

Instrument air shall be distributed to individual or groups of pneumatic devices via header/sub-header constructed of copper tubing and sweated fittings Sub-headers from the main instrument air header shall have ball isolation valves Instrument air supply lines sizes shall be sufficient to fully serve the intended application(s) Pneumatic devices shall have an isolation valve installed in the instrument air supply line to that device upstream of the air set or filter/regulator

10 10 Combustible Gas Detection System

A Combustible Gas Detection System (CGDS) shall be provided to identify the presence of a fuel gas leak in the plant area Gas detectors calibrated to the LEL of methane, shall be located at gas compressors, at the fuel gas analyzer enclosure and at the fuel gas supply interface to the CTG The actual quantity of detectors shall be determined after installation of the gas lines but prior to system operation Each detector shall initiate a local visual and audible alarm on the detection of the fuel gas All detectors shall be wired to the DCS to initiate a "combustible gas detected" alarm

10 11 Fuel Gas Calorimeter System

Gas flow may be conventionally measured or, alternatively, a mass flowmeter may be supplied

A gas calorimeter shall be provided to monitor the energy content of the fuel gas received by the plant The analyzer and its associated hardware shall be suitably housed to withstand ambient conditions and protected against the potential accumulation of combustible gas(es) The system shall be complete with calibration system and computer and printer for data reduction and reporting

10 12 Ambient Monitoring Systems

10 12 1 Ambient Air Monitoring

One ambient air monitoring system (AAMS) shall be provided to measure ambient levels of particulate matter, SO_x and NO_x outside the plant boundary The AAMS station shall be complete with required sampling system, analyzers and data acquisition system for collecting and logging concentration data as well as meteorological data such as wind speed and direction, temperature and humidity

The station shall be housed in an environmentally conditioned, walk-in shelter complete with lighting and convenience receptacles Final location of the station shall be determined based on environmental permit requirements

10 12 2 Atmospheric and Meteorological Conditions

Meteorological conditions shall be continuously sensed and recorded from an outdoors enclosure Signals shall be transmitted to the DCS for plant performance control where required Conditions to be monitored are temperature, humidity, rainfall, snowfall, atmospheric pressure, wind velocity, wind direction

10 12 3 Seismic Warnings

A Richter scale indicator shall be provided to warn of potential seismic events which could result in plant shutdown

SECTION 11 0

CIVIL/STRUCTURAL/ARCHITECTURAL REQUIREMENTS

Section	Title	Page
11 1	General	C11-1
11 2	Design Basis	C11-1
11 3	Geotechnical	C11-2
11 4	Site Civil Work	C11-2
11 5	Structural Design	C11-4
11 6	Structural Materials	C11-5
11 7	CT/ST Generator/HRSG Building	C11-6
11 8	Combustion Turbine/Steam Turbine/Generator Pedestal	C11-7
11 9	Combustion Turbine/Generator	C11-8
11 10	Heat Recovery Steam Generator (HRSG)	C11-8
11 11	Gas Compressor/Scrubber	C11-8
11 12	Miscellaneous Yard Equipment and Tank Foundations	C11-9
11 13	Transformers	C11-9
11 14	Cable Duct & Trenching	C11-10
11 15	Cooling Water System	C11-12
11 16	Yard Piping Supports	C11-12
11 17	Architectural Design Criteria	C11-13
	Appendix 11-1 Demolition Estimate	C11-19

SECTION 11 0 - CIVIL/STRUCTURAL/ARCHITECTURAL REQUIREMENTS

11 1 General

This Section provides a description of the main buildings, auxiliary structures and other civil/structural work that will comprise the plant, as well as the architectural features, layout, and the general criteria upon which their design will be based Civil and structural work shall include geotechnical exploration, demolition, site preparation, excavation and grading, storm drainage and dewatering, underground utilities, outfalls, intakes, paving, road work, gravel surfacing, and the design and construction of the plant structures including their foundations

11 2 Design Basis

The design shall be based on the following United States Codes and Standards except where recognized equivalent local regulations are applicable

Plant design shall adhere to the Uniform Building Code (UBC) for architectural and structural design requirements In addition the following reference standards shall be used as applicable

- American Concrete Institute (ACI 318)
- American Institute of Steel Construction (AISC)
- American Society for Testing and Materials (ASTM)
- American Association of State Highway and Transportation Officials (AASHTO)
- American Welding Society (AWS)
- American Water Works Association (AWWA)
- UBC - Latest Edition (1997)
- Underwriters Laboratory (UL)

Site climatic parameters are given in Section 3 of this Specification

11 3 Geotechnical

The Contractor shall perform additional site specific geotechnical investigations, as required, and as a basis for all design work

11 4 Site Civil Work

11 4 1 Demolition

The Contractor is to note that an area within the existing CHP plant site is to be demolished to make room for the CCGT facility Suitable precautions are required to insure for the safety and isolation of this site from the operating areas in the adjacent plant, both during the demolition and the construction phases These precautions extend to fencing and site security, burn permits, equipment erection during high wind conditions, fire watch, and each and every thing to separate the operating during construction

The Contractor is to implement demolition using a local subcontractor The Scope of this Work is provided in the Appendix to this Section

Underground electrical lines, as well as underground and aboveground gas pipeline exist in the area of the new plant and shall be removed and temporarily relocated out of the way of construction activities to maintain operation of the existing CHP power plant adjacent to the proposed site The temporary line shall remain in operation until the new gas pipeline is installed and in operation Care shall be taken with all underground work since existing underground utilities may exist but are not documented The Contractor shall coordinate all demolition and material salvage and/or disposal with the Employer This includes existing materials and abandoned equipment laying around the project site area

11 4 2 Earthwork

Contractor shall perform all necessary excavation, backfill, dewatering, and final grading as required for installation of underground utilities, foundations, support structures, drainage, and final grading as required Final site grading shall be as follows

- final plant elevation shall be taken as **(Later)** which shall be considered as high point of paving (HPP) and be consistent with the existing plant HPP
- Finished floor elevation for enclosed buildings within paved areas shall be a minimum of 150mm above HPP
- Finished floor level for enclosed buildings in unpaved areas shall be a minimum of 150mm above the adjacent finished grade level

409

Waste materials shall be disposed of in accordance with Employer's direction Fill material shall be clean mineral soil, free from organic or other deleterious materials and stones having any dimension greater than 74 mm Plasticity Index for fill materials shall not exceed 10 as determined in accordance with ASTM D4318 Fill materials shall be placed in a controlled manner, lifts shall not exceed 200 mm in thickness, and shall be compacted to 95% of the maximum dry density as determined in accordance with ASTM D1557

Porours fill material shall be placed beneath all slabs on grade, and shall be graded in accordance with the requirements for Size Number 8, as specified in ASTM D448 Minimum thickness of porous fill shall be 150 mm

Site finished grade shall consist of crushed stone surfacing, not be less than 150 mm in thickness Stone shall be well graded with maximum particle size not exceeding 37 mm

11 4 3 Drainage and Sewers

Storm drainage shall be provided to convey runoff water away from the equipment and buildings Drainage system shall consist of area drains, piping network, manholes, catch basins and, if required, a retention or detention pond

Drainage design shall be based on a 25-year, 24-hour rainfall (see Section 3 0) with a minimum time of concentration of 10 minutes Manholes shall be used at all changes in pipe direction Storm drainage shall discharge towards the existing plant drainage system

Storm drainage piping shall be 200 mm diameter minimum and shall be constructed of precast concrete pipe or galvanized corrugated steel pipe All manholes, catch basins and area basins shall be constructed of precast concrete, cast-in-place concrete, or masonry

Sanitary sewer system shall be provided from all bathroom and locker utilities the CT/ST/Generator/HRSG Building and connected to a new sewage treatment plant Sanitary sewer treatment plant shall be sized for a minimum of **[Later]** liters per day with a sewer line slope to provide a minimum flow velocity of 0 6 meters/sec Minimum pipe size shall be 100 mm Sanitary sewer clear effluent shall be tied into the existing CHP plant sewer system

11 4 4 Foundations and Sheet Piling

Foundation systems may be concrete spread footings, mat foundations, and/or pile foundations Piles used for pile foundations shall be concrete filled pipe piles, steel H-piles, precast concrete piles, or augured concrete piles Wood

piles are not acceptable Pile capacity shall be determined by further geotechnical investigation and shall be verified by not less than two compression load tests, one uplift load test and one lateral load test Piles may be friction piles or end-bearing piles

Sheet piling for dewatering, construction in water, or trenching shall be steel or wood, if temporary, and removed upon completion of construction Only steel sheet piling shall be used if piling is to be left in place after construction

11 4 5 Roads and Paving

Roadways and paved areas required shall be designed for AASHTO HS20-44 loading Paving shall be reinforced Portland cement concrete or asphalt concrete with design based on site determined 'k' value for soil Paving within 10m of the Combustion Turbine/Steam Turbine/Generator/HRSG building shall be designed for an axle load of 31,750 kg to permit use of cranes

Roads shall have a minimum one way lane width of 3 5m and a two way total width of 6m All roads shall have 2 0 m shoulders Minimum radius of curvature shall be 20 0 m All roads shall have a 20 mm/m slope from the crown All other paved areas shall pitch not less than 10 mm/m to drains

Areas around equipment not indicated as paved shall be compacted crushed stone in accordance with the requirements for earthwork

11 5 <u>Structural Design</u>

Structural design shall be based on American Institute of Steel Construction (AISC), American Concrete Institute (ACI), and UBC Codes Design loads, load factors, and allowable stresses shall be in accordance with the codes and specific modifications noted Equipment weights shall be manufacturer's listed operating weights Minimum safety factors shall be

Overturning	1 5*
Sliding	1 5*
Buoyancy/Wind Uplift	1 5*
Impact	1 25

*Reduction to the S F of 1 25 may be used for temporary, controlled construction loading

Erection loads shall be determined by the Contractor in conjunction with vendor information

All structures, equipment anchorage, piping, and cable trays shall be designed to resist code-specified wind and seismic loads Pipe supports shall also be designed for reactions due to pipe stress analyses and degree of support restraint

Deflection limitations shall be in accordance with AISC recommendations Differential deflections, or settlements, shall be limited to the maximums stated in ACI More stringent requirements are required for supports for dynamically loaded equipment Deflections shall not exceed manufacturer's requirements

Bridge crane capacity shall be based on crane size needed to lift single largest part required for repair of equipment, with an additional 10% reserve capacity

Submittal of calculations to Employer is required for all concrete, steel, and masonry elements and seismic analysis Calculations shall contain element identification, loading, and assumed support conditions, as well as finally selected design

Structural steel members, including grating attachments shall be bolted connections only

Structural design may utilize standard computer programs that have been verified by the Contractor's Engineer Documentation of verification shall be submitted with the calculations The design shall be certified by a licensed professional engineer

11 6 Structural Materials

- Concrete - shall have an ultimate compressive strength of 21 0 MPa at 28 days and a minimum modulus of rupture of 3 4 MPa per ASTM C78 for all concrete work except for steam turbine/combustion turbine/generator pedestal foundation which shall have a minimum compressive strength of 27 5 MPa at 28 days Cement shall conform to ASTM C150, Type II (unless Type V is required to meet subsoil conditions)

- Concrete mix design shall be in accordance with the requirements of ACI 318 Maximum water/cement ratio shall not exceed 0 45

- Reinforcing Bars shall be deformed bars complying with ASTM A615, Grade 60 Welded wire fabric reinforcement shall comply with ASTM A185

11 7 CT/ST/Generator/HRSG Building

The conceptual layout drawing for the CT/ST/Generator/HRSG Building is as shown on BRE Drawings M-200 and M-201

The CT/ST/Generator Building shall contain the combustion turbines, HRSG's, steam turbine, generator, and associated auxiliary equipment, including condensers, vacuum pumps, closed cooling water heat exchangers and pumps, condensate pumps and and offices, control room, electrical switchgear room, battery room, dining room, lockers and shower and toilet areas, and a maintenance and shop area

Spaces within the personnel area shall be temperature and humidity controlled Wall insulation shall be provided

Noise levels for the control room and office areas shall not exceed 45 dbA

Interior building clear height along the turbine generators shall be controlled by the overhead service crane and its ability to remove all necessary equipment parts Building construction shall be a braced steel frame with metal panel walls and an insulated metal deck roofing system All floors shall be concrete Fenestration shall be such as to provide practical amounts of daylight commensurate with energy and ventilation requirements Ventilation shall be as designed to limit temperature in operating areas as specified in Section 8

Specific structural design criteria for the building are as follows

Equipment Loads	-	Vendor supplied operating weights
Special Live Loads	-	Turbine laydown - 3000 Kg/m^2
Ground Floor Slab General	-	1500 Kg/m^2 (300 psf)
	-	or 9T fork lift wheel load
Tank Load	-	110% full capacity
Pipe Loads	-	Minimum 150 Kg/m^2 Except for main steam, feedwater, condensate and cooling water which shall be designed for actual weight and stress analysis support reaction loads
Cable trays	-	Actual loads or assume 100 Kg/m^2 until actual loads are known

11 8 Turbine/Generator Pedestals

Each turbine/generator pedestal will be a reinforced concrete space frame composed of an operating deck, on which the machine is supported, supporting columns, and a foundation mat The pedestal shall be free standing and independent of the enclosing building

A static and dynamic analysis and design shall be performed using a computer program, as follows

The purpose of the analysis is to calculate the axial loads, shears, and moments in the pedestal resulting from static and dynamic loads, and to determine the response frequencies of the pedestal to ensure non-resonance with the rotating equipment

The entire pedestal shall be modeled, including the mat foundation and supporting piles (if applicable) The static portion of the analysis shall include

1) Beams, girders, and columns shall be modeled as prismatic members representing the characteristics of the real structure Members shall be located at the centerlines of their sections Section properties shall be based on uncracked section

2) Shear and torsional effects shall be considered in the analysis and, accordingly, care shall be taken in specifying member properties and loads to accurately account for these effects

3) The mat shall be modeled using springs to represent the piles (if applicable) and soil-structure interactions Soil and pile parameters shall be based on recommendations of the Geotechnical Report

4) Because of the size of structural components, clear spans of beams and girders framing into columns should be used for calculation of stress and deformation This may be done by program command or by modeling "links" or connecting segments with relatively high stiffness

5) Equipment weights, locked rotor load, and vibration loads shall be provided by Vendor

The dynamic analysis shall include

1) The dynamic loading shall be in accordance with manufacturer's recommendations

2) Masses shall be lumped at locations compatible with the desired responses and mode shapes

3) The number of modes considered shall be such that natural frequencies up to 130% of the machine speed are included

4) Degree of damping shall be as recommended by the manufacturer

11 9 Combustion Turbine/Steam Turbine Accessories

Each CT air intake filter shall be located on an independent foundation mat isolated from the turbine mat

Combustion turbine/steam turbine support modules such as the accessory module, liquid fuel atomizing module, generator auxiliaries compartment, lube oil reservoir, etc shall be on independent mats (pile supported, if applicable) Mats shall be one meter larger (in each direction) than the module plan area with top at 300 mm above grade Dynamic analysis is not required

11 10 Heat Recovery Steam Generator (HRSG)

Each HRSG, including its stack, shall be erected on one continuous mat foundation Mat shall be a minimum of two meters larger (in each direction) than the plan dimensions of the HRSG, and a minimum of 300 mm above grade

Thermal loads due to equipment expansion and contraction (horizontal friction loading) must be considered

Boiler feed pumps shall be mounted on a combined mat (pile supported, if applicable) Mat weight should be not less than 9 times the weight of the pumps

All concrete shall have a 28 day ultimate compressive strength of not less than 27 5 MPa

11 11 Gas Compressor/Scrubber

The gas compressors and scrubbers are to be located outdoors, on one continuous mat foundation Mat size shall be a minimum of 1 0m larger all around the plan area of the equipment Total mass of the mat shall be not less

45

than 9 times the weight of the rotating parts and 4 5 times the weight of the equipment Top of concrete shall be 300 mm above the finished grade

11 12 Miscellaneous Yard Equipment and Tanks Foundations

Tanks and transformers shall be on mat foundations (pile supported, if applicable) 300 mm above finished grade Mats shall be a minimum of 500 mm larger than the tank diameter Support mats shall be designed for wind loads on empty tanks to resist overturning

Miscellaneous transfer pump pads shall be supported on concrete foundations Foundations shall be designed so that the natural frequency of the soil/ foundation system will be at least 50% greater then the equipment operating speed In no case shall a system frequency between 50% and 150% of operating speed be allowed

Fuel oil pumps shall be located in a 300 mm high curbed area to contain leaks or spills Drainage shall be piped to an oil/water separator for discharge into storm system

11 13 Transformers

Main power transformers are oil cooled and each transformer shall be provided with a crushed stone covered retention basin The basin shall be sized to contain 110% of the transformer oil plus the volume of the fire fighting water without allowing the spilled oil to rise above the crushed stone Stone shall be a minimum 40 mm size, and shall be not less than 500 mm thick if supported on steel grating above the bottom of the pit Overall basin size shall be determined in accordance with the following criteria

a) Basin size shall be established so that any oil spill will be directed within the confines of the basin, and oil floating on top of fire fighting water will be maintained 150mm below surface of stone fill

b) Basin drainage shall be designed to continuously discharge fire fighting water or accumulated rain water above a certain level Perforated vertical drain pipes shall be provided to visually determine water level and to periodically drain the entire basin

c) Basins shall drain only rain water and fire fighting water leaving the transformer coolant in the basin for separate handling

Retention basin and transformer support shall be on a concrete mat foundation, pile supported Design load shall include weights of transformer, rock, oil, and

fire water There shall be no water overflow interconnections between transformer foundation basins

11 14 Cable Duct & Trenching

Yard electrical power, control, and communication cables shall be routed in reinforced concrete underground duct banks or pre-cast cable trenches For type of system, refer to Electrical Design Criteria, Section 9 0

The cables shall be routed in plastic ducts encased in reinforced concrete (duct banks) or pre-cast cable trenches placed in excavated trenches and properly backfilled Electrical manholes shall be provided at changes in direction, and elsewhere, as required, for installation and maintenance of the cables

Criteria for Excavating and Backfilling

a) Trenches shall be excavated to the depths required to provide a minimum cover of 750mm Bottom of trench shall be smooth and free of stones or other sharp objects Where this condition does not exist, provide not less than 75mm of sand below the cable Minimum width of trench shall be as required for proper installation and backfill

b) Backfill shall consist of granular material or inorganic silt or clay with a liquid limit less than 50 The first 100mm above the cable shall be sand Placement of backfill shall be in 150mm lifts Compaction of cohensionless soils shall be to 95 percent maximum dry density and 90 percent for cohesive soils

c) A brightly colored (red) plastic warning tape shall be placed over the cable approximately 300mm below grade as a "dig-in" warning indication Tape shall be inscribed with word "Electric" in Russian

Criteria for Concrete Duct Banks

a) Where indicated, plastic ducts shall be encased in red dyed concrete Each single duct shall be completely encased in a minimum of 75mm of concrete Between adjacent power and communication ducts provide 100mm of concrete

b) Top of concrete shall be a minimum of 750mm below grade or paving

c) Minimum reinforcement for shrinkage shall be provided throughout At road crossings and under pavements, reinforcement shall be adequate for imposed loading

d) Duct banks shall be sloped towards manholes at a slope no less than 100mm in 30 meters

e) Encasement of ducts shall be monolithic Construction joints shall be watertight to prevent infiltration of water into duct bank and manholes

f) For encased ducts, bottom of trench may be cut to the neat lines of the duct bank, for the height of the duct bank, and the concrete placed against the sides of the trench Backfill to 300mm above the duct bank shall be free of stones larger than 50mm in diameter

Criteria for Manholes

a) Covers and matching frames of gray cast iron shall be provided for manhole access as follows

    1) In paved areas top of cover shall be flush with top of pavement

    2) In unpaved areas top of cover may be elevated

b) Where duct banks enter manholes they may be either cast with the manhole walls or enter via suitable openings In the latter case, the joint design shall ensure a watertight connection to prevent infiltration of groundwater

c) Where duct banks tie in to rigid structures details shall consider flexibility required to withstand relative movement due to seismic loading

d) Each manhole shall be furnished with a submersible sump pump with a cast iron grille-type frame and cover

e) A cable pulling iron shall be installed in the wall opposite each duct line entrance

Structural Design Loads shall include the following, as applicable

    1) Dead load of structure and equipment

    2) Overburden due to soil backfill

    3) Lateral loads due to soil assuming an at rest condition

    4) Hydrostatic loads due to presence of groundwater

418

5) Surcharge of 1700 kg/m^2 adjacent to manholes

6) In paved areas or where subject to vehicular traffic, an HS20-44 wheel load shall be applied

7) Manholes shall be founded on natural subgrade or compacted fill Allowable soil pressure shall be

   a) On natural subgrade - to be determined from the Geotechnical Study

   b) On backfill compacted to 90 percent of maximum dry density - 10,000 kg/m^2

8) Snow loads based upon 1000 mm of standing snow

11 15 Cooling Water System

The auxiliary pumphouse, in which the pumps for units 6 and 7 were located, shall be re-utilized for the CCGT plant Old pumps shall be removed and replaced in kind with horizontal centrifugal pumps Existing maintenance lifts shall be used

11 16 Yard Piping Supports

All piping shall be supported above grade on cast-in-place concrete sleepers (pile supported, if applicable) Piping shall be supported over roadways on steel pipe racks with a minimum road clearance to underside of structure of 4 5m

Sleepers shall have top of concrete a minimum of 300 mm above grade and be designed for pipe forces determined by pipe stress analysis

Elevated supports shall be steel framed racks on concrete caps or spread footings (pile supported, if applicable) Racks shall be designed for pipe forces plus wind loads or seismic forces, whichever is greater Steel shall be fireproofed with applied gunite if passing over areas where flammable materials can accumulate

Fire water lines shall be installed below grade with not less than 750mm cover over trenches Width at bottom of trench shall be equal to pipe diameter plus 0 6m The pipe shall be supported on 150mm of granular bedding material compacted to 95% maximum dry density Backfill material shall be controlled fill placed in two 150mm lifts compacted to 95% maximum density The balance of the fill shall be controlled fill placed in 150mm lifts

11 17 Architectural Design Criteria

11 17 1 Design Considerations

Architectural design shall be based on establishing functional building and space relationships

11 17 2 Applicable Codes and Standards

For construction, fire protection, and life safety standards, the requirements of the following codes or standards shall govern

a National Fire Protection Association (NFPA)

b UBC - Code for Class B4 Occupancy

11 17 3 Architectural Design

Building floor plans shall be determined in accordance with the equipment general arrangement Sufficient area for equipment laydown, repair, part removal and personnel exiting shall be included in all plans All occupied non-operational areas shall have a minimum sound insulation meeting STC of 36

All normally occupied areas shall be provided with two means of egress in compliance with NFPA 101, Life Safety Code

Construction materials and/or systems selected shall have a minimum useful life of 25 years in the environment in which they are used

11 17 4 General Above Grade Construction

Construction of buildings shall be as included in Table 11 1 Color will be selected by Employer at a later date

TABLE C 11 1

Building	Roof	Walls
CT/ST/Generator/HRSG	Insulated metal panels	Uninsulated metal wall panels (Personnel area to be insulated)

11 17 5 Insulated Metal Wall Panels

Insulated metal wall panels, where called for, shall be as follows

Face Sheet Factory preformed metal panels with a minimum thickness of 0 70mm Sheet shall conform to ASTM A653SQ Grade 33 with coating designation G90 The panels shall have an epoxy base coat on both sides and a factory applied finish color coat on the exposed surfaces only

Thermal Insulation Insulation shall be isocyanate foam block, fiberglass wool or board The minimum insulation value of the total panel assembly shall be 0 04 cal/hr/sqcm/°C

Subgirts Preformed from metal sheets with a minimum thickness of 1 2 mm Sheets shall conform to ASTM A653SQ Grade 33 with coating designation G90 The depth of section shall be adequate to withstand imposed loading

Liner Tray Factory preformed metal panels with a minimum thickness of 0 70 mm Sheets shall conform to ASTM A653SQ Grade 33 with coating designation G90 The exposed surface of the tray shall be provided with a factory applied color coating

Fire Resistance Fire resistance of the core combined with face and liner panels shall have a flame spread rating of 25 when tested in accordance with ASTM E84

11 17 6 Uninsulated Metal Wall Panels

Uninsulated metal wall panels shall conform to the same requirements as specified for face sheets of insulated metal wall panels, in paragraph 11 18 5, except that the factory applied finish coating shall be applied to both sides

11 17 7 Windows and Louvers

Louvers, to be installed in metal wall panels, shall be of the same material as the metal siding panels

In general, louvers shall be of the fixed weatherproof type, provided with inside aluminum bird screen and not less than 50% free area

Windows shall be glazed with tinted glass to reduce solar load

421

11 17 8 Exterior Doors

Personnel Doors - Exterior personnel doors shall be hollow metal construction, in pressed steel frames minimum size 1m by 2 1m with panic hardware Weather-stripping, weatherproof saddle and door closures shall be provided

Required number of exit doors shall be determined by code requirements of NFPA 101-Life Safety Code and UBC

Rolling Steel doors - Rolling steel doors shall be of standard industry construction, motor operated, with hood baffle, weatherstripping and bottom seal Doors shall be designed to withstand the wind velocity given in Section 3

11 17 9 Roof Construction

Roof areas for buildings listed in Table 1, and other finished areas shall have a roof system consisting of an outer weather sheet, thermal insulation, subgirts, and an interior liner tray Design of the roof system shall be adequate for the loads specified in the UBC code including heavy snow load Roof slope shall not be less than 10 degrees Material requirements shall be as follows

- Outer Weathering Sheet

  Factory fabricated steel sheet panels with a thickness not less than 0 70 mm Panels shall conform to ASTM A653SQ Grade 33 with coating designation G90 A factory applied coating consisting of an epoxy base coat on each surface with a finish color coat on the outside surface shall be furnished Panels shall be fastened to the structural steel purlins by self-tapping screws, or similar fasteners, adequate for imposed loading

- Thermal Insulation

  Fiberglass wool and isocyanate foam and expanded polystyrene board with a coefficient of heat transfer (through the complete construction) of not greater than 0 04 calories/hr/sq cm/^{o}C

- Subgirts

  The subgirts shall provide support for the outer weathering sheet and shall be sections fabricated from steel sheets with a minimum thickness of 1 2 mm conforming to ASTM A653SQ Grade 33 with coating designation of G90 A factory applied coating shall be applied to the exposed surface Liner shall be fastened to purlins with self-tapping screws

- Fasteners

  Fasteners shall be stainless steel self-tapping screws with washers with bonded gaskets or integral self sealing washers

11 17 10 Interior Construction Details

- Partitions

  Partitions shall, generally, be of concrete masonry unit (CMU) In finished areas, concrete unit masonry partitions may be furred out and covered with gypsum board, except where partitions are to be covered with ceramic tile

  Office partitions shall be of steel studs, sound retardant insulation, and gypsum board surfaces

  Toilet partition shall be metal, floor mounted with a baked enamel finish

  Reinforcement of concrete unit masonry in exterior walls to resist wind loading and seismic forces, as specified in the Civil/Structural Design Criteria, shall be determined by Contractor

- Ceilings

  Ceilings in office areas, control room, conference room, laboratory, lunch room, locker room, and finished corridors shall be suspended, acoustical, lay-in type ceiling panels with exposed grid Toilet rooms, janitors' closets, and shower rooms shall have a suspended metal lath and cement plaster ceiling Alternate shall be ceramic faced acoustical lay-in panels

- Column Enclosures

  In office areas, all steel columns shall be enclosed with gypsum board on furring

- Stairs

  Exit stair construction in office areas shall be steel pan construction with concrete filled treads and platforms with non-slip nosings Railings shall be as required in the UBC code Grating tread open riser stairs are acceptable for equipment platform access

- Interior Doors

  Interior doors shall be hollow metal in pressed steel frames Doors shall be provided with glass vision panels except at storage and utility rooms, janitor's closets, toilet and locker rooms, etc Where required by code, doors shall be appropriately fire rated

  Door hardware shall, generally, be cylinder type locksets, key in knob type with steel butts Closers shall be provided at all exterior doors and fire doors Panic type exit hardware and other specialty types shall be provided as required

- Interior Finishes

  Gypsum board wall surfaces shall be painted Toilet rooms, janitors' closets, and shower room walls shall be covered, full height, with ceramic tile All exposed masonry walls shall be painted Exposed concrete floors shall be treated with a surface hardener to prevent dusting

  Vinyl non-skid floor tile shall be provided in control room, corridors, locker rooms, lunch room, and other personnel areas Control room floor shall be static conducting type

  Ceramic mosaic floor tile shall be provided in lavatories, shower rooms, and janitors' closets

  Sheet vinyl flooring shall be provided in laboratory

  Except for areas finished in ceramic tile, bases shall be vinyl Ceramic tile bases shall be used with ceramic floor tile

  Plaster ceilings shall be painted

11 17 11 Miscellaneous Equipment and Furnishings

- Locker Rooms - Lockers shall be steel, nominally 300 mm wide by 460 mm deep by 1830 mm high, with sloped tops, set on concrete bases

  Locker room benches shall have polyurethane painted pine seats on steel pedestals

  Laboratory - As determined by design development, laboratory shall be furnished with casework and permanently installed equipment

11 17 12 Fire Walls

Fire walls of a minimum 2 hour fire rating shall be provided for the following areas

- Fire walls shall be provided to separate the personnel areas, control room, electrical switchgear room, battery rooms and stairwells from each other and from operating areas of the plant

- Separate turbine generator lube oil storage tanks from the plant operating areas

All penetrations, such as cable, cable tray, pipes, HVAC ducts through the fire walls and floors shall be fire stopped with approved material in order to maintain the integrity of the fire rated barrier

APPENDIX 11-1

DEMOLITION ESTIMATE

APR 14 '98 08 58 FR BURNS & ROE
BURNS AND RUE

ESTIMATE

YEREVAN TPS, # 6, 7 BOILERS DISMOUNTING

#	DESCRIPTION	PRICES JUSTIFICATION	UNIT	Q-TY	UNIT PRICE			WORKS PRICE		
					TOTAL	INCLUDING		TOTAL	INCLUDING	
						main salary	eq-ment use		main salary	eq-ment use
1	2	3	4	5	6	7	8	9	10	11
1	Pipes and metal constructions dismounting, Metal frame, hip roof, boiler dismounting, TGM-94 (59,6 11,3x0 5-36 1x0 5 12 2x0 5) x 1,0,86x1,08+325x (1,086x1,08-1)=	9-163 TSM p II	t	708,4	91,14	5,65	18,05	64564	4002	12787
2	Lift well (up to 40 m) and enclosure banisters (75,1-22,6x0,5-42,8x0,5-97 x 0,5) x 1,086x1,08+325x (1,086 x 1,08-1)=	9 190 TSM p II	t	39,8	100,23	11,3	21,4	3989	450	852
3	Metal construction gates and window cross casement (103 22,4 x 0,5 - 55,2 x 0,5 25,4 x 0,5) x 1,086 x 1,08 + 306 x (1,086 x 1,08-1)	9 49 TSM p II	t	22,8	113,3	11,2	27,6	2583	255	629
4	Dismounting of drums with internal devise and supports	SSRCTS p II p 2020 9-153	tn	97,1	18,99	5,92	1,99	1844	575	193
5	Low and high pressure pipelines dismounting	12-2 6 K=1,1 K=0,5	t	316	64,95	62,7	2,07	20524	19813	654
6	Water economizer dismounting (213,4-9,72) x 0,5 – 196,9 x 0,5 = 5,85 x 0,5 =	12-2-4 K=1,1 K=0,5	t	204	101 84	98 45	2,93	20775	20084	597
7	Suspension pipes, furnance screen and boiler pipe dismounting (87,01-3,34) x 0,5 68,64 x 0,5 = 14,63 x 0,5 =	12-2-8 K=1,1 K=0,5	t	283,1	41,88	34,32	7,32	11856	9716	2072

8	Airheater and condensation device dismounting	9-163 TSM and II note	t	285,3	21,09	5,92	13,99	6018	1689	3991
9	Winches installation and dismounting GP 5 t	VrYer 25-18	p	8	75,89	75 89	-	607	607	-
10	Winches (5t) use	STSEM p 0626 23-07	Shift	960	9,14	-	9,14	8774	-	8774
11	Reinforcement dismounting	1-0851 12-791-II K=0,5	t	22,9	49,5	36,75	8,38	1134	842	192
12	Furnance dismounting	according 12-2-4 K=1,1 K=0,5	t	102,3	101,84	98,45	2,93	10418	10071	300
13	Transportation expenses	according	t	2086	2,5	0,44	2,03	5215	918	4235
	Total for 1st part							**158301**	**69022**	**35276**
14	Insulation dismounting Shammote brick insulation dismounting (13,5-3,96) x 0,5 8,37 x 0,5 0,77 x 0,5	26-8 K=0,5	m^3	35,5	4,77	4,19	0,38	169	149	13
15	Sovelite plates insulation dismounting	26-11 K=0,5	m^3	249	16,15	10,45	0,16	4021	2601	40
16	Mineral water insulation dismounting	26-17 K=0,5	m^3	320	39,45	31,4	0,075	12624	10048	24
17	Thermal insulation concrete dismounting	46-95	m^3	340	8,2	6,3	1,9	2788	2142	646
18	Refractory concrete dismounting	46-78 note	m^3	230	29,8	13	16,8	6854	2990	3864
19	Weather strip dismounting	46 95	m^3	80	8,2	6,3	1,9	656	504	152
20	Reinforcing fabric dismounting # 20-1,6, # 5,5 - 10/265 # 10	26-85 K=0,5 note	m^2	7421	0,57	0,56	0,01	4230	4156	74
21	Construction garbage loading on trucks and its mobilization on the distance 11 km	TSMM	t	1980,5	1,28	0,44	0,8	2535	871	1584
	Total II part							**33877**	**23462**	**6397**
20	III Construction part	46-78	m^3	284	29,8	13	16,8	8463	3692	4771

BURNS AND ROE

APR 14 98 09:59 FP BURNS & ROE
ID 8852-151-817
BURNS AND ROE

	Concrete masses and foundations dismounting									
21	Construction garbage loading on trucks and its mobilization on the distance 11 km	TSMM	t	624,8	1,28	0,44	0,8	800	275	500
	Total III part							**9263**	**3967**	**5271**
22	IV Electric installation works Electro-installation works price taking into account K=0,5 for dismounting	Accountant books	Calculated form the HOTEP estimate					71400	56405	10340
	Total part IV							**71400**	**56405**	**10340**

			57284
Total parts I-IV	272841	1834271	11457
20% of salary and equipment use for	42028	52856	
constraint circumstances			68741
Total	314869	30571	
Total K=1,15 for reconstruction	362100	210941	79052
Overhead expenses 16,6%	60092		-
Total	422092	210941	79052
Planned accumulations	33767		
Total estimate in prices of 1984	455859	210941	79052
Including materials (electrode, oxygen, carbide-calcium prices)	(362100 210941-79052) x 1,166 x 1 08 – 90677		
Appendix in prices of 1998			

ESTIMATE # 1 **ATTACHMENT # 1**

1 MATERIALS ESTIMATE

1 Materials prices (in prices 1984) consist 90802 rub
the same in prices of 1998 - 90677 x 530 = 48058810 drams

2 Salary estimate
Salary in prices of 1984 consist 210941 rub, the same in the prices of 1998 210941 x 1,25 x 151,5 = 39946952 drams

3 Equipment operation
Equipment operation prices of 1984 - consist 79052 rub, the same in the prices of 1998 - 79052 x 1,7 x 443 = 59534061 drams

4 Overhead expenses in the prices of 1984 is 60092 r, the same in the prices and norms of 1998 - 60092 x 1,34 x 92,1 = 7416194 dram

5 Lubrication materials

5 1 Materials - 48058810

5.2 Salary - 39946952

5 3 Equipment operation 59534061

5 4 Overhead expenses - 7416194

TOTAL - 154956017

5 5 Unforeseen works

K= 1,25 193695021

5 6 Planned accumulations - 1936902

Total for boiler 1 - 213064523

Total for two boilers 426129047

VAT 20% - 85225809

Total estimate 511354856 or $1022710 , exchange rate is $1 500 drams

Appendix Methodology of Ministry of town planning of RA is used (November 1996) in these estimates preparation

SECTION 12 0

ELECTRICAL MATERIALS INSTALLATION

Omitted at this time

v31

SECTION 13 0

CONSTRUCTION

Section	Title	Page
13 1	General	C13-1
13 2	Construction Facilities and Services	C13-1
13 3	Safety	C13-3
13 4	Security	C13-3
13 5	Reference Points	C13-3
13 6	Dangerous Materials	C13-3
13 7	Waste Disposal	C13-3
13 8	Adjoining Utilities	C13-4

SECTION 13 0 - CONSTRUCTION

13 1 General

Contractor shall plan, organize, and control work to construct the plant Contractor shall provide construction, erection, and installation services necessary for the completion of the plant in a safe and orderly manner The scope shall include, but not be limited to, labor, supplies, materials, equipment, tools, transportation, and each and every thing required to perform the required construction

Contractor shall purchase, expedite, inspect, and pay for labor, materials, equipment, services, tools, machinery, water, temporary utilities, transportation, and other facilities and services necessary for the construction of the Plant, whether of a temporary or permanent nature, including without limitation, facilities and services necessary for potable and non-potable water, sewage, waste disposal, and electric power

Contractor shall secure applicable construction permits required for the conduct of the required construction scope Prior to performing any excavation, Contractor shall contact the Employer for the purpose of obtaining the necessary data pertaining to existing underground and in-ground facilities and the proper clearances to excavate

The construction and erection site shall be maintained in a neat and clean condition Materials shall be protected from damage due to dirt, debris, or the elements Upon completion of the Plant, Contractor shall dispose of all temporary buildings, rubbish, unused materials, and other equipment and materials belonging to and used in the performance of the work Contractor shall be responsible for the disposition of any contamination caused by Contractor

13 2 Construction Facilities and Services

Contractor shall furnish and maintain temporary construction facilities and provide construction services including, but not limited to, the following

a Temporary Storage Facilities

Contractor shall provide facilities at the Site for the proper unloading and storage of all plant material delivered to the Site If adequate facilities are not available such material shall be stored at suitable offsite facilities (e g warehouses, storage yards etc)

b Construction Power and Distribution

Contractor shall be responsible for all electric power tie-ins at the Site

c Temporary communication system

d Temporary lighting system

e Site drainage, sedimentation control, and dewatering systems

f Temporary roads

g Fire protection service (until turnover)

h Construction sanitary facilities including construction offices

i Temporary water supply and distribution (potable and non-potable) Potable water shall be high quality bottled water

j Parking Facilities

Contractor shall furnish adequate parking facilities to accommodate all construction work forces

k Site Security

Contractor shall be responsible for providing the fencing, guarding, and watching the Site as necessary for protection during construction (until Final Completion)

l Construction testing services (e g weld NDE, hydrotesting, megger testing, concrete strength and placement compaction testing, etc)

m Construction Materials

Contractor shall supply all the equipment, tools, consumables, instruments, etc , necessary for the construction and erection of the plant The supply of the construction equipment shall include fuel lubricants, spare parts, and any other elements or service required for operation and maintenance

n Site environmental compliance and protection

o First Aid Services

Contractor shall provide onsite first aid services in conjunction with arrangement for offsite first aid transportation and treatment as necessary during the construction of the plant

13 3 Safety

Contractor shall prepare and implement a Site Safety Plan that will include fire protection, emergency situations, procedures and hazardous material control Subcontractors and vendor-supplied service organizations will each be required to implement a safety program commensurate with the work to be performed and in compliance with Contractor's Site Safety Plan A copy of the Site Safety Plan shall be provided for information to Employer

13 4 Security

Contractor shall prepare and implement a Site Security Plan Contractor shall cooperate with Employer on all security matters A copy of the Site Security Plan shall be provided for information to Employer

13 5 Reference Points

Contractor shall establish baselines, monuments, and reference points for construction as necessary to proceed with layout of the work Contractor shall be responsible for laying out the work to such lines and grades indicated on the drawings, and shall protect and preserve the established reference points, subject to changes as Employer may direct

13 6 Dangerous Materials

Contractor shall not use explosives, radioactive, or other dangerous material without prior notification to Employer Contractor shall be responsible for the proper handling, transporting, storage, and use of such materials When the use of such materials or methods is necessary, Contractor shall exercise the utmost care and carry on such activities under supervision of its properly qualified personnel Contractor, at its expense, shall repair any damage caused by its handling transporting storage and use and shall be responsible for obtaining permits as applicable

13 7 Waste Disposal

Contractor shall be responsible for removal and lawful disposal of all boilout and pickling waste water, discarded material, debris rubbish, unusable excavated material and waste including hazardous substances if any

generated by Contractor and its subcontractors and suppliers during construction of the plant Contractor shall not be liable for nor required to remove any hazardous waste on or under the Site on the effective Notice-to-Proceed date or waste brought on by Employer thereafter or generated by commercial operation of the plant

13 8 Adjoining Utilities

Contractor shall make necessary efforts to protect any and all parallel, converging, and intersecting electric lines and poles, telephone lines and poles, highways, waterways, railroads, and any and all property from damage as a result of its performance of the work Contractor shall bear all liability for and shall at his expense repair, rebuild or replace any property damaged or destroyed in the course of its performance of the work

SECTION 14 0

SCHEDULING AND PROGRESS REPORTING

Section	Title	Page
14 1	General	C14-1
14 2	Scheduling	C14-1
14 3	Project Progress Reports/Meetings	C14-1

SECTION 14 0 - SCHEDULING AND PROGRESS REPORTING

14 1 General

Contractor shall implement a program that will include monitoring the Project Schedule and its critical paths and supporting schedules to manage the progress of the work

14 2 Scheduling

The Project Schedule sets forth the overall time frame for work execution, anticipated dates for achievement of significant Contractor milestones, required Employer furnished services and items, and the Guaranteed Completion Date As part of his bid, Contractor shall accept or identify deviations from this schedule

Upon Notice to Proceed, Contractor shall develop an Intermediate Schedule directly tied to the Project Schedule The Intermediate Schedule will be a computer generated schedule utilizing the Critical Path Method (CPM) It shall provide additional activity breakdown necessary for detailed work planning An intrinsic activity coding structure shall allow the Intermediate Schedule to be summarized to the Project Schedule Milestones

The monthly progress report shall, by the site mobilization date, also include a diagrammatic summary of the Intermediate Schedule to a similar level of detail as the Project Schedule Additionally, Contractor shall supply, at Employer's request, detailed information on Employer furnished services and items and those activities directly related to them This additional information shall consist of the basic diagrams and reports generally used in CPM analysis

Contractor shall review details of the Intermediate Schedule with Employer

14 3 Project Progress Reports/Meetings

Contractor shall submit a Project Progress report to the Employer each month

The Project Progress Report shall be sent or delivered to the Employer's Representative or to such other person and address that the Employer may designate Contractor shall arrange monthly meetings with Employer at jobsite or other mutually agreeable location to review project status

Contractor's Authorized Representative and Key Personnel shall attend such other meetings as Employer may reasonably request for the purpose of reviewing project progress Meetings are to be held at the usual work place of Contractor's Authorized Representative and Key Personnel

SECTION 15 0

COMMISSIONING AND TRAINING

Section	Title	Page
15 1	Commissioning	C15-1
15 2	Training	C15-2

SECTION 15 0 - COMMISSIONING AND TRAINING

15 1 Startup

15 1 1 General

Contractor shall perform system cleaning, flushing, and checkout and startup of the plant, and conduct system and plant performance tests Startup shall be performed with assistance of available Employer plant operating and maintenance personnel for equipment operations under the technical direction of Contractor

15 1 2 Startup Services

Contractor shall provide systematic testing of permanent plant components and systems including verification of all safety interlocks and controls Contractor shall be responsible for the overall management of the Plant startup, operation and maintenance until Final Completion

Contractor shall

a Prepare procedures for the administration, scheduling, safety tagging and clearance, release for test, work item tracking and progress reporting, logging of lifted wires and jumpers, chemical cleaning, flushing, steam blows, energization, and performance testing

b Interface and coordinate with Employer, equipment/systems suppliers, regarding startup requirements related to flushing, electrical interconnection, testing and operations of the Plant

c Calibrate instrumentation, meters, relays, transmitters, switches, etc Provide written records of field tests, calibration activities, and final settings of various control devices

d Energize, test, and adjust analog and digital controls and control loops

e Run in, vibration test, and balance (if required) major plant equipment, provide written records of initial rotating equipment vibration tests and levels for all equipment 20 KW (25 HP) and greater

f Perform and record megger and high voltage insulation testing and provide written records of test results

g Remove and reinstall orifice plates and install, monitor, clean, and remove temporary and permanent strainers required for system flushes

440

h Set safety and relief valves as required, reset of factory settings is not advisable

i Verify/perform equipment hot and cold alignment checks

j Make initial fill and flushes of lubricants, resins, water and chemicals

k Provide technical guidance and direction to Employer operating and maintenance personnel in startup, testing, maintenance, and operation until turnover

l Prepare and submit system turnover packages to Employer

m Perform steam blows using Silent Steam Blow Method

15 2 <u>Training</u>

15 2 1 General

Contractor shall plan, manage, and conduct a training program for Employer-assigned operating and maintenance personnel Such personnel will be capable of being trained in the specific requirements of the plant

Contractor shall conduct the training program for not more than 25 personnel designated by the Employer The program shall commence approximately three (3) months prior to plant Performance Testing, and as mutually agreed to by Employer and Contractor, and shall be conducted on a standard 40-hour workweek Each class will be presented only once

All training will be conducted in the Russian language

15 2 2 Training Facilities/Aids

Contractor shall provide furnished training facilities for the training classes These facilities will be as near as possible to the plant and have adequate classroom space (each trainee's work area should provide space for the training lesson text and the associate set of drawings) Contractor shall also make available whiteboards, movie screen, overhead projector, podium and flip charts for lectures and showing of training aids

15 2 3 Training Program

Contractor shall provide instructors to conduct a site-specific Training Program structured on a system approach The program shall consist of formal

classroom courses reinforced by system walkdowns for familiarization and observation of the installed equipment and systems Equipment supplier classes shall be integrated into the overall Contractor program

The program curriculum shall present the theory of operation, design, flow paths, integrated operation overview, system interface, and control of plant components, equipment, and systems The curriculum for the maintenance personnel may be an abbreviated version of the operator program with emphasis on components and how they relate to the systems, troubleshooting and special maintenance needs

Training material, including system descriptions (operating sequences) and a set of attendant plant design drawings (P&IDs, single line schematics, plant layouts, etc) shall be provided for each trainee's use and retention The lessons shall be prepared by Contractor and provided to the Employer for information 30 days prior to commencing the training program The lessons shall generally be structured in the following format system descriptions, plant component descriptions, flow path and controls, principles of operation, troubleshooting (if provided by vendor), plant support systems, and reference material

Site-specific topics will be addressed systematically and shall include the following mechanical and electrical systems

DESCRIPTION

Fuel Gas Supply System
Fuel Oil Supply System
Medium Voltage Power System
Low Voltage Power System
Instrument and Uninterruptible Power System
Direct Current Power System
Main Generator Output Power System
Heat Recovery Steam Generator - Main Steam Systems
Heat Recovery Steam Generator - Vents and Drains
Closed Cooling Water System
Condensate and Feedwater Systems
Circulating Water System
Chemical Injection Systems
Makeup Demineralizer System
Sampling and Water Quality System
Fire Protection System
Service Water System
Instrument/Plant Air Supply Systems
Combustion Turbine System
Raw Water Pretreatment System

Steam Turbine Systems
Plant Environmental Control System
Sodium Hypochlorite System
Turbine Building Environmental Control System
Wastewater System
Hydrogen System

15 2 4 Supplier Training Programs

Contractor shall arrange for, schedule, and monitor selected equipment supplier training programs Training courses shall be conducted by the suppliers of major plant equipment and systems at jobsite, and shall consist of formal classroom sessions and walkdown of systems These training sessions shall be integrated with the Contractor's overall training program Supplier training programs shall be provided for the following components and systems

		On Site Training
a	Combustion Turbine	4 weeks
b	Steam Turbine	4 weeks
c	Heat Recovery Steam Generator	2 weeks
d	Distributed Control System	4 weeks
e	CEM	1 week
f	Gas Compressors	2 weeks
g	Make-up Demineralizer and Water Pretreatment Systems	4 weeks
h	Combustion Turbine Control System	2 weeks
i	Steam Turbine Control System	2 weeks
j	Sodium Hypochlorite System	2 weeks
k	Overall plant and systems operation including review of P&IDs	3 weeks

The above classroom instruction may be adjusted, as required, however, total number of hours for training shall not be less than as specified above

SECTION 16 0

PERFORMANCE TESTING REQUIREMENTS

Section	Title	Page
16 1	Performance Test Descriptions	C16-1
16 2	Performance Test Acceptance Criteria	C16-1
16 3	Performance Tests	C16-1
16 4	Emission Tests	C16-2
16 5	Performance Test Conditions	C16-3
16 6	Plant Functional Tests	C16-5
	Appendix 16-1	C16-7

SECTION 16 0 - PERFORMANCE TESTING REQUIREMENTS

16 1 Performance Test Descriptions

The Contractor shall carry out the Performance Tests as described in the following sections

The Contractor's Plant Performance Test procedures shall be based on the latest editions of the following ASME Test Codes, as applicable

ASME - PTC 22	Gas Turbine Power Plants (1985)
ASME - PTC 4 4	Gas Turbine Heat Recovery Steam Generators
ASME - PTC	Cooling Towers
ASME - PTC 6	Steam Turbines
ASME - PTC 3 3	Gaseous Fuels
ASME - PTC 3 1	Diesel and Burner Fuels
ASME - PTC 9	Displacement Pumps and Compressors
ASME - PTC 19 1	Measurement Uncertainty, Instruments and Apparatus (reaffirmed 1990)
ASME - PTC 46	Cogeneration and Other Thermal Power Plants

16 2 Performance Tests Acceptance Criteria

The Provisional Acceptance Certificate (PAC) criteria are as follows

a) Net Electrical Power Output Test $\geq$ 100% of Guaranteed Value

b) Net Plant Heat Rate $\leq$ 100% of Guaranteed Value

16 3 Performance Tests

The following tests shall be performed

1) Net Power Output

2) Net Plant Heat Rate

An eight hour test shall be performed to demonstrate the net electrical power output and net plant heat rate when firing the specified gaseous fuel in the combustion turbine Collection of data will be for four (4) hours during the eight hour test (every other hour)

Net Electrical Power Output is defined as the average electrical output of the Plant as measured at revenue meters, using the Plant's permanent metering devices, adjusted to the Guarantee Performance Conditions, during the Eight Hour Test

Net Plant Heat Rate is defined as the sum of the average electrical output measured at revenue meters, divided by the average rate of use of the specified fuels, calculated as the product of the measured fuel flow rates and measured performance fuel lower heating value, adjusted to Performance Guarantee Conditions Data shall be taken at 10 minute intervals (for each 1 hour period), and each data point shall be corrected to Guarantee Conditions The method of calculation of Net Plant Heat Rate is shown in Appendix 15-1 contained in this section

16 4 Emissions Tests

Emission tests shall be conducted to confirm that the plant emissions are within the values stated in Section 4 0 The tests shall be conducted in accordance with the applicable USEPA Test Method and shall be subject to Employer's approval Emissions tests shall be conducted during performance tests specified in Section 15 3

During the performance and functional tests, airborne emissions as measured by the Plant's permanent Continuous Monitoring System (CEM) specified in Section 10 shall be within the guaranteed maximum stack gas emissions The CEM will be installed, calibrated, tested and maintained in compliance with the requirements of the procedures and specifications of the USEPA The emissions test shall be conducted with the combustion turbine(s) first firing fuel gas and then the back-up distillate fuel

16 5 Performance Test Conditions

16 5 1 General

Contractor is responsible for overall planning and coordination of the Performance Tests Contractor may use the services of equipment suppliers and outside contractors for assisting in these tests

All Performance Tests shall be conducted in accordance with test procedures developed by the Contractor and mutually acceptable to Employer and Contractor Contractor shall prepare and deliver test procedures to the Employer for review at least 120 days prior to the first Performance Test

The test procedures shall identify instruments to be used for each test, instrument accuracy, instrumentation calibration requirements, and correction factors and curves as required to adjust the performance data from actual test conditions to the Performance Guarantee Conditions, and shall define methods to assure the quality of fuel sampling and testing, performance data collection, and data reduction Contractor shall employ instrumentation, testing procedures, and data recording sufficient to determine the performance of the main equipment and balance of plant equipment

Data reduction shall be based on approved test procedures, including mutually agreed-upon calculation methods Fuel gas and fuel oil samples will be collected by Employer during the Performance Tests A mutually acceptable independent testing laboratory shall be used for analysis of fuel gas and oil

Contractor may conduct a Performance Test at any time prior to Final Acceptance in accordance with the Contract Contractor may, at its discretion, abort any Performance Test before completing it Once a test has been aborted, data from the aborted test may not be used in another test Contractor may perform as many Performance Tests as it deems necessary, within the time limitation of the Contractor for Provisional Acceptance The Performance Tests shall be run concurrently In the event of a shortfall in any Performance Test, determination of the cause of such shortfall shall be made within fifteen days of completing the test

Employer and Employer's Consultant shall have the right to observe each Performance Test Contractor shall give at least 10 business days' prior written notice of scheduled commencement of each Performance Test to Employer and other persons designated by the Employer

Contractor may select and designate the results of any one completed Performance Test to be used for purposes of demonstrating that Contractor has met the Performance Guarantees associated with that specific test

Contractor shall report to Employer the results of each Performance Test which Contractor considers completed Aborted test results shall be delivered at Employer's request Each report of an unsuccessful test shall specify Contractor's analysis of the defect or deficiency that rendered the test inaccurate or caused the Plant to fail to meet its Performance Guarantee

Completion of the performance tests, emissions tests and functional tests are a prerequisite for issuance of the Employer's Provisional Acceptance Certificate (PAC)

16 5 2 Deviations from Guarantee Conditions

The results of the Performance Tests shall be corrected for deviations from the specified Guaranteed Performance Conditions set forth in Section 8 1

If the Combined Cycle Power Plant performance tests are started with less than 240 fired hours of operation on the Combustion Turbine, then no corrections to Net Plant Efficiency or Net Electrical Output achieved during a Performance Test shall be made to account for performance degradation If the Combined Cycle Power Plant Performance Test commences 240 fired hours after initial combustion turbine operation, then a correction to the test data may be made based on the mutually agreed upon plant performance test procedures including the combustion turbine manufacturer's degradation prediction curves

Where applicable, corrections shall be based on mutually agreed upon performance curves or data supplied by the applicable equipment manufacturer(s) and otherwise in accordance with methods agreed upon in the applicable test procedures

Deviations in the results of any Performance Tests that are caused by variations in the performance fuel (fuel gas or fuel oil) will be a cause for an adjustment in accordance with the provisions herein

If, at any time prior to or during any Performance Test, any of the contaminants and/or characteristics of the actual fuel supplied by Employer for the operation of the Plant is shown to have exceeded the maximum allowable levels set by the combustion turbine manufacturer and as specified in Tables 8-1 and 8-2 for the performance fuel, and/or the heating value of the actual fuel is outside of the specified maximum variation range, then the affected Performance Guarantee(s) as specified herein shall be adjusted In

such event, Employer and Contractor shall assess the situation with regard to any potential damages that may be caused to the combustion turbine and other auxiliary equipment by the use of off-specification fuel, and agree on a mutually acceptable adjustment to the affected Guarantee(s)

Uncertainty in Performance Test results shall be determined in accordance with mutually agreeable application of instrument uncertainty in accordance with the methodology of ASME PTC 6 or ASME PTC 19 1 Test results within the band of uncertainty shall be deemed to have met the guarantees Test equipment shall be calibrated prior to testing in accordance with ASME PTC 19 1, 19 2, and 19 3, and ASME Publication Fluid Meters, Part II - Interim Supplement 19 5 on Instruments and Apparatus, Sixth Edition, 1971

No increase in guaranteed heat rate due to aging of steam turbine will be allowed

16 5 3 Performance Test Interruptions

Data from the time period in which a Performance Test interruption occurs will be excluded from the data for the period for the scheduled test Interruptions will be permitted when the cause is outside the responsibility of the Contractor and shall include, but not be limited to, Force Majeure events, unavailability of fuel or water, and operating and dispatching decisions outside Contractor's Control

When a test interruption occurs, Contractor will notify Employer To the extent practicable, test interruptions will be compensated for by extending the test period by an amount of time equal to the interruption including time to return to steady state operation Data from the interrupted period will be excluded from analysis, but data collected before the test interruption may be used by the Contractor in the analysis of the Performance Test data and results

16 6 <u>Plant Functional Tests</u>

Contractor shall prepare test procedures and perform Functional Tests as described in this Section

16 6 1 Availability Test

Contractor shall perform a 120 hour availability test to demonstrate a minimum capacity of 95%

16 6 2 Fuel Transfer Test

Contractor shall demonstrate that the plant can automatically transfer from fuel gas to distillate upon loss of fuel gas While operating at full load on fuel gas, loss of fuel gas pressure shall be simulated on the combustion turbine, which shall transfer to distillate without significant loss of load (10 MW) for more than 5 minutes

Appendix 16-1

Method of Calculation of Net Plant Heat Rate

Net Plant Heat Rate

$$HR_N = \frac{Q_{mGT}}{N_N}$$

where

N_N - electrical power output (KW) as measured at high side of step-up transformer

Q_{mGT} - fuel input to combustion turbine $\frac{MJ}{hr}$ (LHV)

TABLE OF CONTENTS
SUBTASK C
SECTION C 2
PERFORMANCE SPECIFICATIONS - CONCEPTUAL DESIGN

DRAWING NO	TITLE
C-101	Demolition Plan
C-102	Site Plan
M-200	Plot Plan - General Arrangement
M-201	Plot Plan - Elevations
-	List of Major Equipment
-	Water Material Balance - Fuel Gas
-	Water Material Balance - Fuel Oil
M-021	Process Flow Schematic Diagram
-	Material Balance - Oil & Gas
E-0035	One Line Diagram - Overall
E-0036	One Line Diagram - Key
E-0005	GT Generator - Metering & Relaying One Line
E-0006	ST Generator - Metering & Relaying One Line
IC-1	Distributed Control System Block Diagram

452

FIRING NATURAL GAS

STREAM	FLUID	FLOWRATE (kg/hr)	FLOWRATE (m3/hr)	PRESSURE (MPa)	TEMPERATURE (deg C)
1	Fuel Oil	0	-	-	-
2	Nat Gas	-	81,552	1 83	96 1
3	HP Steam	378,840	-	8 38	527 8
4	IP Steam	93,894	-	1 17	250 6
5	LP Steam	17,636	-	0 31	190 6
6A	Circ Water Supply	-	12,021	-	31
6B	Circ Water Supply	-	12,021	-	31
7A	Circ Water Return	-	12,021	-	41
7B	Circ Water Return	-	12,021	-	41
8	Circ Water Supply	-	1,683	-	31
9	Circ Water Return	-	1,683	-	41
10	Condensate	-	496 4	-	40
11	Make-up Water	-	14 7	-	15 6
12	Condensate Make-up	-	14 7	-	15 6
13	NOx Water	-	0	-	15 6
14	NOx Water	-	0	-	15 6
15	Flue Gas (per stack)	1,584,000	-	-	-

FIRING FUEL OIL

STREAM	FLUID	FLOWRATE (kg/hr)	FLOWRATE (m3/hr)	PRESSURE (MPa)	TEMPERATURE (deg C)
1	Fuel Oil	74,462		0 44	15 6
2	Nat Gas	-	0	-	-
3	HP Steam	403,334	-	8 38	530
4	IP Steam	98,792	-	1 17	250
5	LP Steam	18,289	-	0 31	190 6
6A	Circ Water Supply	-	12,794	-	31
6B	Circ Water Supply	-	12,794	-	31
7A	Circ Water Return	-	12,794	-	41
7B	Circ Water Return	-	12,794	-	41
8	Circ Water Supply	-	1,791	-	31
9	Circ Water Return	-	1,791	-	41
10	Condensate	-	529	-	43 3
11	Make-up Water	-	100 7	-	15 6
12	Condensate Make-up	-	14 7	-	15 6
13	NOx Water	-	74 5	-	15 6
14	NOx Water	-	74 5	-	15 6
15	Flue Gas (per stack)	1 627,200	-	-	-

EQUIPMENT

PUMPS	FLOW (m^3/hr)	HEAD (m)	MOTOR (kW)	CASING MAT'L
BFP-1A/1B, 2A/2B	258	1 089	902	Cast Iron
P-3A/3B	114	31	15	Stainless Steel
P-4A/4B	82	46	15	Stainless Steel
P-5A/5B	82	468	150	Stainless Steel
P-6A/6B	518	71	143	Cast Iron
P-7A/7B/7C/7D	6 440	28	702	Cast Iron
P-8A/8B	-	-	50	Cast Iron
P-9A/9B	102	520	21	Cast Iron

TANKS	VOLUME (m^3)	PRESS (MPa)	SHELL MAT'L
T-1	757	Atm	Stainless Steel
T-2	654	Atm	Stainless Steel
T-3, 4	5,000	Atm	Existing

EXCHANGERS	DUTY (kJ/hr)	TUBE MAT'L
HE-1	1,094,200,920	Stainless Steel
HE-2A/2B	76,594,064	Stainless Steel

COMPRESSORS	FLOW (m^3/hr)	INLET PRESS (MPa)	OUTLET PRESS (MPa)	MOTOR (kW)
NG-1A/1B	81,552	0 80	1 83	3,356

NOTES 1 ALL [illegible] ARE AVERAGE CUBIC METERS PER HOUR
2 USAGES EXCLUDE EXISTING CHP PLANT

WATER BALANCE DIAGRAM (ASSUMES GAS FIRING)
YEREVAN POWER PLANT - COMBINED CYCLE REPOWERING

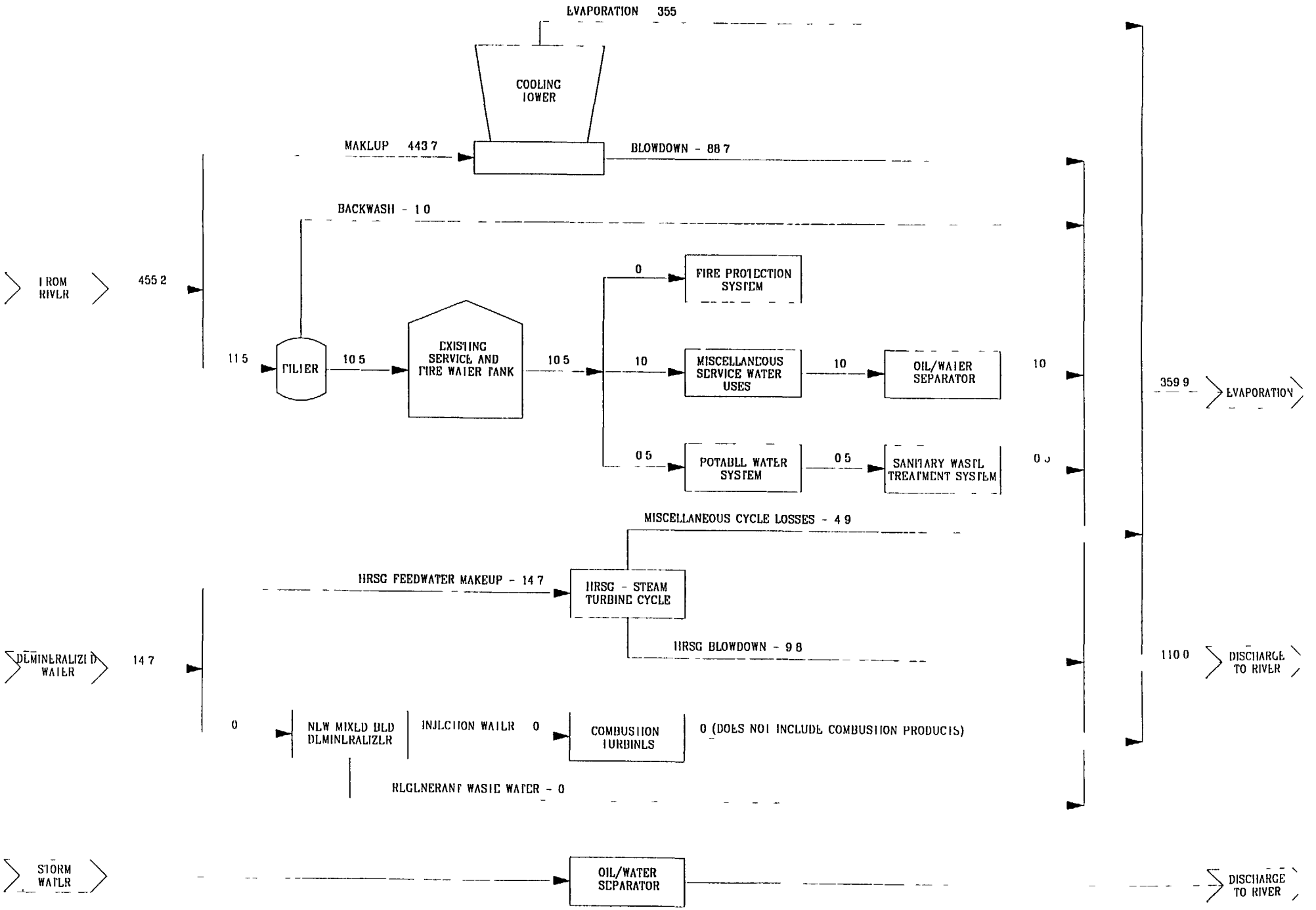

NOTES 1 ALL FLOWS ARE AVERAGE CUBIC METERS PER HOUR
2 USAGES EXCLUDE EXISTING CHP PLANT

WATER BALANCE DIAGRAM _ (ASSUMES FUEL OIL FIRING)
YEREVAN_POWER_PLANT_-_COMBINED_CYCLE_REPOWERING

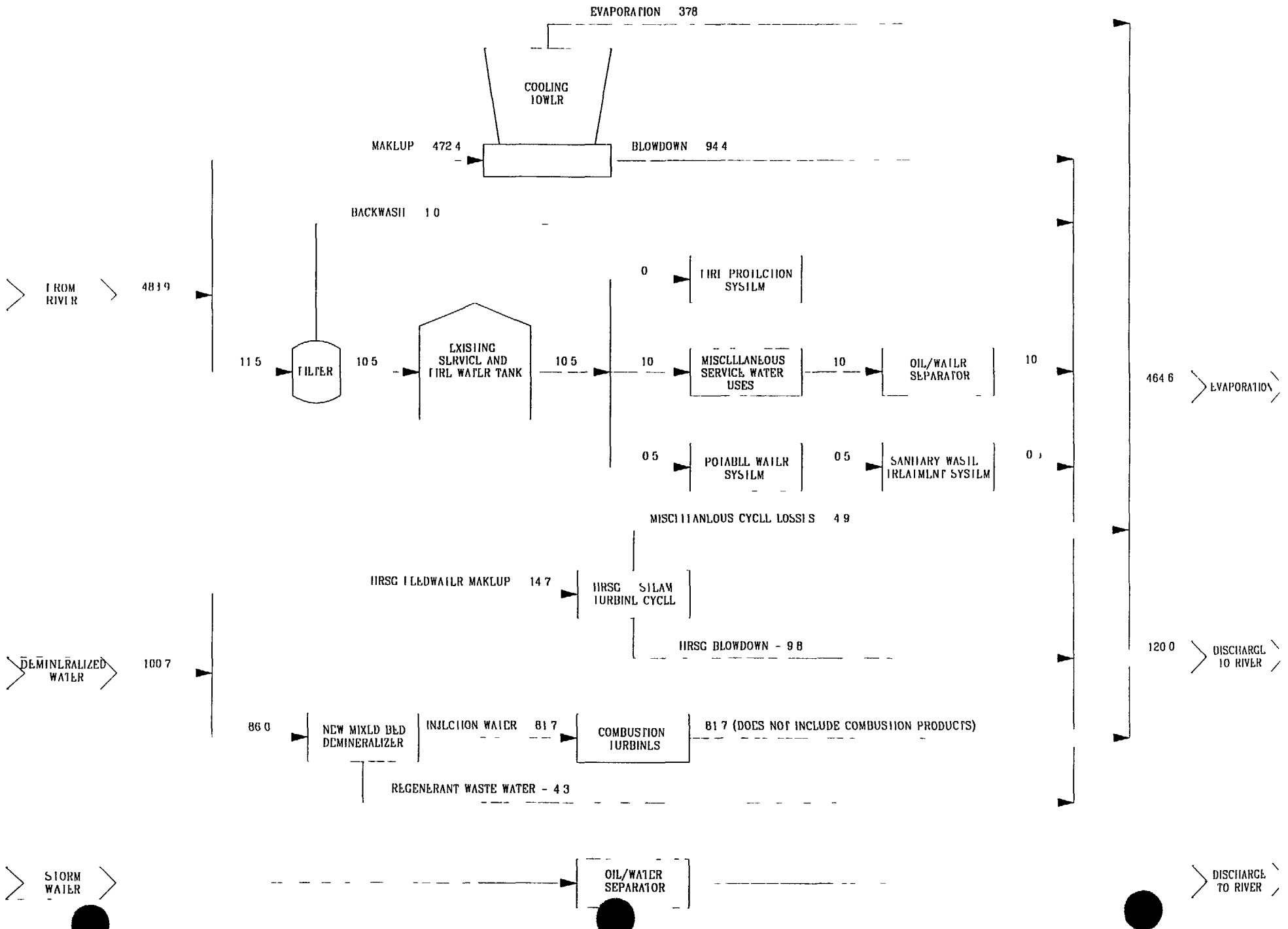

EQUIPMENT LIST

Yerevan CHP Repowering Project

ITEM NUMBER	EQUIPMENT	QTY	PUMP	SERVICE	DESCRIPTION (each Unit)
CGT 1 2	Combustion Gas Turbine Generator	2		100% Continuous	130 MW
HRSG 1 2	Heat Recovery Steam Generator	2		100% Continuous	3 - PRESSURE
STG-1	Steam Turbine Generator	1		100% Continuous	130 MW
BFP 1A/1B 2A/2B	HP / IP Feedwater Pumps	4	CH	2 @ 100% 2 Spare	902 kW (258 m^3/hr @ 1 089 mTDH)
HE-1	Steam Condenser	1		100% Continuous	1 094,200,920 kJ/hr
HE 2A/2B	Closed Cooling Water Heat Exchangers	2		1 @ 100%, 1 Spare	76 594 064 kJ/hr
NG 1A/1B	Natural Gas Booster Compressor	2		1 @ 100% 1 Spare	3 356 kW (81 552 nm^3/hr @ 1 81 MPa Disch)
P-3A/3B	Condensate Transfer Pumps	2	CH	**Intermittent**	15 kW
P-4A/4B	Demin Water Transfer Pumps	2	CH	1 @ 100% 1 Spare	15 kW
P 5A/5B	Demin Water Injection Pumps	2	CH	Intermittent	150 kW
P 6A/6B	Condensate Extraction Pumps	2	CV	1 @ 100% 1 Spare	143 kW (518 m^3/hr @ 71 mTDH)
P-7A/7B/7C/7D	Circulating Water Pumps	4	CH	4 @ 100%	**702 kW (6,440 m^3/hr @ 28 mTDH)**
P 8A/8B	Closed Cooling Water Pumps	2	CH	1 @ 100%, 1 Spare	**50 kW**
P-9A/9B	Fuel Oil Transfer Pumps	2	PH	Intermittent	21 kW
T-1	Demineralized Water Storage Tank	1			757 m^3 (8 2 m DIA x 14 6 m H)
T-2	Demin Injection Water Storage Tank	1			654 m^3 (7 6 m DIA x 14 6 m H)
T-3 4	**EXISTING** Fuel Oil Tanks	2		Clean and Reuse	5,000 m^3
T-5 6	Boiler Blowdown Tanks	2			
V 1	**Mixed Bed Demineralizer System**	1		**Standby**	**87 1 m^3/hr**
CT-4, 5	**EXISTING** Parabolic N D Cooling Towers	2		Replace Fill and reuse	
	Chemical Injection System	1			
	Building Sump Oil/Water Separator	1			

PUMP LEGEND
CH - Horizontal Centrifugal
CV - Vertical Centrifugal
PH Horizontal Positive Displacement

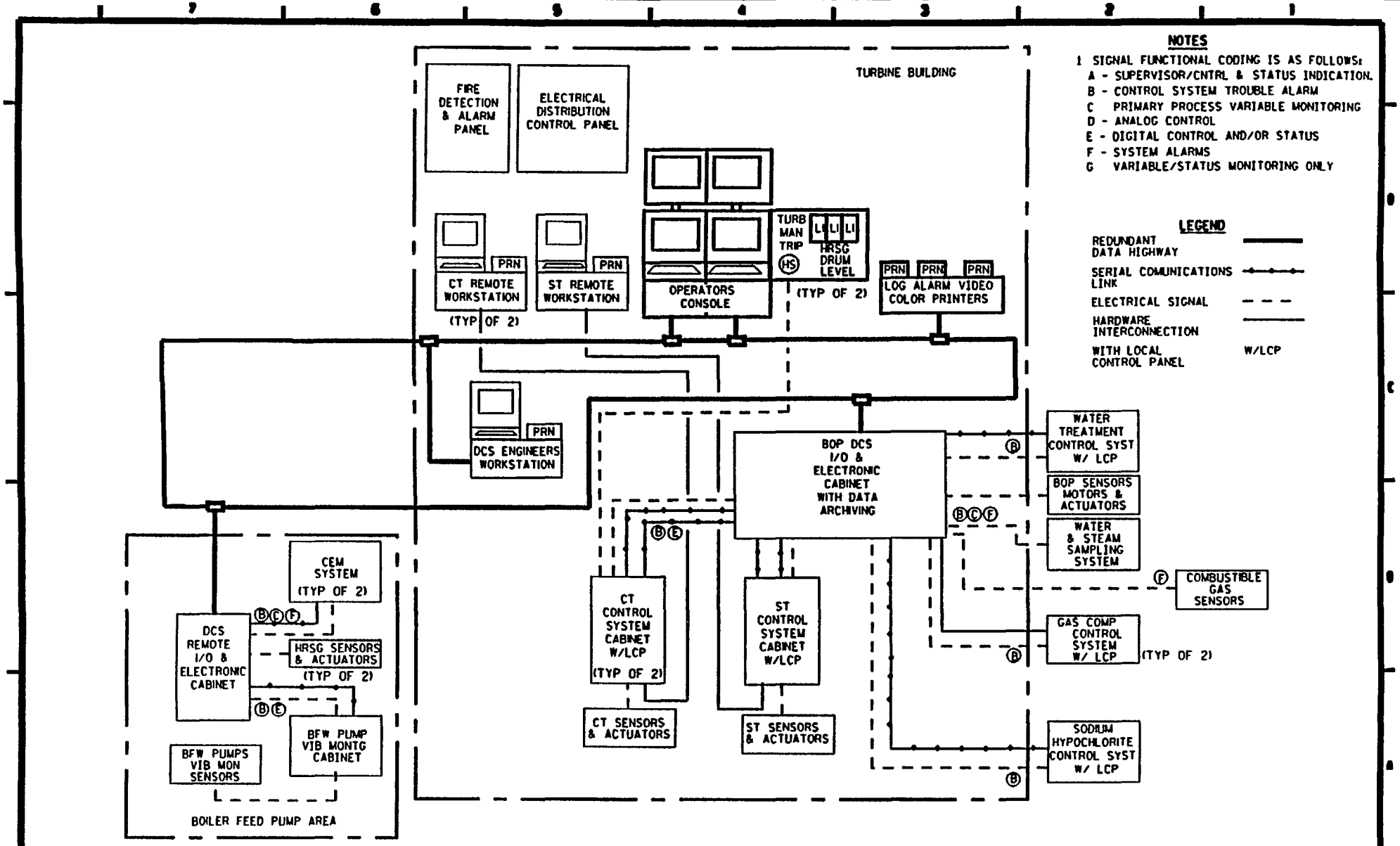

Rev No	Revision	Date	Dwn	Chkd	Approved Chief Eng

Drawing Control

Purpose	Approved By	Date	Released By	Date
For Information				
For Comment				
For Bid				
For Construction				

Engineering Review

Discipline	Comments	Initials	Date
Mech			
Elec			
Civil			
Arch			
Struct			
I&C			
Dsn	Chkd		

YEREVAN CHP REPOWERING
YEREVAN, ARMENIA

CONTROL SYSTEM BLOCK DIAGRAM

BURNS AND ROE COMPANY
Engineers and Constructors Oradell, NJ
A Component of Burns and Roe Enterprises, Inc.

Approved for Construction Date
Date
Work Order 5928
Drawing No IC-1
Rev A

INSTR/5891-12\YICLDGN

STATUS 8/13/98

TABLE OF CONTENTS

Subtask D - Environmental Assessment

Section	Item
D 1	Preliminary Environmental Assessment and Evaluation
	a Introduction
	b Description of the proposed project
	c Description of the project environment
	d Determination of the potential impacts of the proposed project
	e Development of management plan to mitigate negative impacts
	f Development of monitoring plans

Subtask D
Preliminary Environmental Assessment and Evaluation

D 1 a Introduction

The objective of this Preliminary Environmental Assessment is to provide the Government of Armenia and the IFI(s) involved with an analysis usable in later preparation of a full environmental assessment of the proposed project

This proposed project, the Yerevan Gas Turbine Combined Cycle Unit will have a nominal capacity of 400 MWe The unit will by fired by two (2) combustion turbines exhausting to two (2) heat recover steam generators (HRSG) which produce steam (3 pressures) to drive a single steam turbine generator

The unit will replace two (2) existing 150 MW gas/mazut fired units at the site that have reached the end of their useful life and that would require major rehabilitation The two units (Yerevan 2-6 and 7) will be demolished and the new unit will be built on the site A Least Cost Power Investment Program investigation by Lahmeyer International identified the need for the units to begin operation in the year 2005, to offset the loss in capacity due to the decommissioning of the 440 MW Medzamor nuclear unit at that time

The unit will be constructed in accordance with Government of Armenia environmental standards and regulations and will meet all environmental requirements of the World Bank

D 1 b Description of the Proposed Project

1 Project Background

1 1 Need for the Project

A Least Cost Power Investment Program investigation by Lahmeyer International (November 1996) identified the need for two (2) 167 MW combined cycle plants to be added in Yerevan, to begin operation in the year 2005 The units were to offset the loss in capacity due to the decommissioning of the 440 MW Medzamor nuclear unit The analysis included the assumption that a new 300 MW unit, Hrazdan 2-5, would be completed and would be in operation by the year 1999 Since construction activities on this unit have ceased and no additional work is planned, the need for the combined cycle project is even greater

It should be noted that the Plan also identified the requirement for an additional 167 MW combined cycle unit to be constructed at Hrazdan, to be in operation by the year 2008

1 2 Fuel Availability

Natural gas is presently available by pipeline at the site in sufficient quantity to operate the proposed two-unit combined cycle plant In fact, the greater efficiency of the combined cycle units will reduce natural gas consumption by approximately 40%, assuming the same power production When pipeline gas is not available, the combined cycle unit may be fired with low sulfur distillate (No 2) fuel oil which is stored on site for such emergency Use of distillate fuel oil instead of the mazut normally fired when natural gas is not available, will have a positive impact on air quality

2 Proposed Project

2 1 Existing Facility

The Yerevan Thermal Power Plant (TPP) is located in the industrial zone of Yerevan City The power plant is of the combined heat-and-power (CHP) design and consists of two section The first section has 5x50 MW units which began operation in 1963-1965 The second section consists of 2x150 MW units installed in 1966-1968 The units in the first section are connected to a common header delivering steam to the turbines as well as supplying process steam and district heating to the city The units in the second section are stand-alone (block units) connected to individual steam turbines

All units are of the conventional steam type with cooling towers and are equipped for dual fuel firing (gas and mazut) Natural gas is supplied to the plant by pipeline while mazut is delivered by rail and stored on-site in fuel storage tanks Natural gas is the fuel of choice but in periods of natural gas shortages, mazut is fired in the boilers (10-15% of annual heat input)

Yerevan TPP is an outdoor type power plant with all major components exposed to ambient climatic conditions The second section units have reached the end of their useful life and rehabilitation costs are considered wasteful since exposure to the elements has caused excessive aging of critical components The Least Cost Power Investment Program recommended that these two units should be operated with absolute minimum maintenance until there is a major breakdown and that the units should then be removed from service and scrapped The Program suggested that the two units be scrapped no later than the year 2001, and the area utilized for the construction of replacement power generation facilities

2 2 Plant Design

The Yerevan Gas Turbine Combined Cycle Unit will have a nominal capacity of 400 MWe The unit will by fired by two (2) combustion turbines exhausting to two (2) heat recover steam generators (HRSG) which produce steam (3 pressures) to drive a single steam turbine generator

Cooling water for the steam turbine surface condenser will be from a circulating water cooling system Make up water to the plant will be from existing wells located within 3 km from the site An existing water pretreatment system will provided potable and service water for the facility An existing demineralizer will provide water of acceptable quality for makeup to the HRSG

Wastewater produced during plant operation will be treated in an oil/water separation system and discharged to the river along with the cooling water blowdown stream Sanitary waste will be treated in a packaged treatment system prior to discharge

Maximum utilization of services and manpower will be supplied from the existing CHP plant

D 1 c Description of the Project Environment

1 Air Quality Environmental Baseline Data

Air quality monitoring at selected locations in the vicinity of the power plant is required in order to establish background values for specific pollutants In an Environmental Assessment of the Armenian Energy Sector (USAID, September 1997), it was determined that Armenia's ambient air monitoring system had deteriorated significantly in recent years Seven ambient air monitoring stations in Yerevan were identified but only three were in operation Samples were collected three time daily and sent to the laboratory of the Ministry of Environment for analysis Pollutants analyzed include NOx, SO_2, chlorine and CO, among others Location of the operating monitoring stations and monitoring data was not made available at the time of the investigation

A program of baseline air quality measurements will be required prior to the implementation of the project Monitoring locations will be selected on the basis of their sensitivity to air emissions due to their position in relation to the plant and prevailing winds Parameters to be monitored include SO_2, NOx and suspended particulate matter (dust) Information collected will be compared with ambient air quality guidelines

2 Noise Baseline Data

A program of baseline noise monitoring will also be conducted with monitoring locations selected based on sensitivity and proximity to the site Particular consideration will be given to any residential location near the site

3 Water Quality Baseline Data

Periodic checks of discharge water quality have been made in the past but quantitative information is not available Water discharge from the operating plant will be sampled and analyzed Analysis will be compared with water discharge quality requirements to determine whether present plant operation conforms to existing regulations If necessary, a technical evaluation will be carried out to determine what modifications to the existing system are required to achieve discharge limits

Groundwater quality will also be determined by appropriated sampling and analysis to determine whether the existing facility has resulted in contamination

D 1 d Potential Impacts of the Proposed Project

1 Impacts During Construction

1 1 Overview of Impacts During Construction

Construction activities may cause impacts associated with material and equipment transport, site demolition, foundations, equipment installation and commissioning operations The construction site is located within an existing thermal power station in a highly industrialized area Construction activities are expected to have no permanent impact on the environment

1 2 Air Quality

During construction, air quality in the vicinity of the facility is likely to be adversely affected, primarily by generation of fugitive dust Dust is produced by both vehicular traffic and by excavation activities The quantity of dust generated by vehicular traffic depends upon a number of variables including the density of traffic and the soil conditions

Construction activities, such as foundation excavation have the potential to release significant quantities of fugitive dust The operation of pile-driving equipment, if necessary, would generate gas/particles and noise emitted into the ambient air These activities are of limited and intermittent duration and any negative impact on air quality will be of a temporary nature Since the location is not close to residential areas, it is predicted that no negative impact will arise such as health hazards to the population around the project site Control of fugitive dusting will be accomplished through the use of spray water on open construction areas

During the course of the demolition of the existing units, it is likely equipment containing or insulated with asbestos containing material (ACM) may need to be removed or modified Removal of ACM which is or which can readily become friable, by untrained personnel and without the use of proper procedures and equipment could result in the release of asbestos fibers into the environment The ability of asbestos to pose a serious long-term health hazard impact has been established

Operation of construction equipment on-site and the increase in vehicular traffic delivering equipment and material to the site will result in a temporary increase in exhaust emissions including NOx, VOC and particulate material These exhaust emissions will be similar in nature to emissions from normal vehicular traffic on nearby roads and should have no significant negative impact on air quality

In general, the impact of construction activities on ambient air quality in the vicinity of the site is expected to be temporary and of minimal impact None of these potential sources of emissions is expected to present any significant air quality problems during construction

1 3 Noise

During construction there will be noise from increased traffic and from construction operations The primary construction noise generated on site will be from diesel powered construction equipment Little can be done to limit such noise but since the site is located in a heavily industrialized area, there should be no significant impact on local residents

1 4 Water Quality

Impact of the project construction on surface water and groundwater quality is expected to be minimum The project will be constructed at an existing power generation site and with the exception of potential silt erosion runoff into the nearby Hrazdan River during heavy rainstorms, there should be no negative impacts on water quality

1 5 Disposal of Construction Wastes

A significant amount of demolition of existing equipment/facilities will occur at the site in order to prepare for the installation of the new facility Construction waste generated during demolition may include

- Debris from demolished buildings, structures, concrete foundations, rebar, etc
- Contaminants such as pipe lagging, organic solvents and oils, PCBs, etc
- Bricks, cement, pipework, electrical fixtures
- Asbestos containing wastes

In addition, waste soil material will be produced during the excavation of equipment foundations All waste material will be transported off-site for disposal at a suitable site

1 6 Socio-economic

The existing site and surrounding infrastructure are more than sufficient to accommodate this project with minimal impact to the existing population An increase in employment opportunity is expected to have a positive impact on the local economy A substantial skilled workforce is contemplated to construct the project and the need for imported labor must be considered While transport activities in the form of transport of construction materials and equipment may have a small impact on people's convenience and health, the potential impact which could occur because of these activities is expected to be minimal

2 Impacts During Operation

2 1 Air Quality

Operation of the proposed gas fired combined cycle units will result in the emission of combustion products into the atmosphere When firing natural gas the composition of flue gas exiting the unit has been estimated as

Flue Gas Component	Volume %	Weight %
N_2 + Argon	75 5	74 8
O_2	13 1	14 7
CO_2	3 5	5 4
H_2O	7 9	5 0
NOx	25 (vppmd)	-
CO	10 (vppmd)	-

The World Bank (Pollution Prevention and Abatement Handbook) provides specific NOx emission limits for combustion turbine units These are as follows

Fuel	NOx Emission Limit*, mg/Nm^3 (Dry)	Emission Limit*, expressed as ppm (Dry)
Natural Gas	125	61
Diesel Fuel	165	80
Fuel Oil	300	146
Variance (max)	400 (where water is not available for water injection))	195

*Emission limits are expressed at 15 percent oxygen

The document contains no emissions limits relative to CO

It is clear that the proposed combustion turbine easily meets World Bank emission limits whether firing natural gas or diesel fuel State Standards of the Russian Federation (GOST 29328-92) provide that for new gas turbine units, NOx emissions should be limited to 50 mg/Nm^3 (25 ppm) for gas fuel and 100 mg/Nm^3 (50 ppm) for liquid fuel (@15% O_2) The proposed combustion turbine will achieve these more restrictive emission limits as well

Mass emissions are an important consideration when estimating the impact of the unit on ambient air quality World Bank Guidelines for ambient air quality may be summarized as follows

	World Bank Guideline for Ambient Air Concentration Limit, $\mu g/m^3$
Particulate Matter	
Annual Mean	50
24-Hour Average	150
SOx	
Annual Mean	80
24-Hour Average	150
NOx	
Annual Mean	100
24-Hour Average	150

Reference standards and guidelines for concentration of pollutants in ambient air have been published by the World Heath Organization, USEPA and the EU Values vary somewhat and the World Bank recommends that individual countries should consider which standards are most applicable

The prediction of the impact of emissions from the proposed plant on ambient air quality must be established by an air quality dispersion modeling analysis Information required to perform the analysis includes

- Stack Height and Inside Diameter
- Pollution Emission Rate
- Stack Inside Diameter and Exit Gas Velocity
- Exit Gas Temperature
- Location and Physical Dimensions of Surrounding Structures

At base load, estimated emissions from the 395 MWe (Gross) combined cycle unit have been estimated as

	Emissions from Proposed Unit, grams/MWh	Emissions from Proposed Unit, tonnes/day
Dust	-	-
SO_2	-	-
NOx	310	2 8
CO	75 4	0 7
CO_2	273,410	2 500

During periods when natural gas is not available, the gas turbines are equipped to fire No 2 fuel oil Although NOx emissions will be controlled by water injection during fuel oil firing emissions are projected to be somewhat higher with NOx emissions increasing from 25 vppmd to 42 vppmd In addition, sulfur present in the fuel oil (0 2 to 0 5 wt%) will result in the emission of small quantities of sulfur dioxide

By contrast, emissions from existing units operating at the station are considerably greater Specific emission rates for Yerevan Unit 2-6, when firing natural gas/mazut, is reported to be as follows

	Emissions from Yerevan Unit 2-6, grams/MWh
Dust	1,400
SO_2	900
NOx	2,600
CO	Not Reported
CO_2	738,254

It is clear that operation of the new combined cycle unit in place of the existing units will significantly reduce pollutant emissions

Other requirements for dispersion modeling include detailed meteorological information including wind speed and direction and ambient temperature This information is usually obtained from data recorded at a meteorological station in the area where weather information is continuously recorded at a minimum of one elevation

A number of dispersion models are presently in commercial use and an appropriate model will be selected and applied as part of the plant Environmental Impact Analysis The modeling will predict the impact of air pollutants discharged from the stack on the concentration at a number of identified ground level receptor locations Predictions will be compared with the World Bank ambient air guideline values

2 2 Noise

Noise will be produced by operation of plant equipment Equipment to be purchased for this project will be specified to meet specific sound pressure limits However, it is expected that noise level in certain operating locations (combustion turbine and steam turbine) will exceed 90 dB(A) and may reach as high as 95 dB(A)

World Bank limits for noise address sound pressure limits at receptors located outside the project property boundary, as follows

	Maximum Allowable Leq (hourly), dB(A)	
Receptor Classification	**Daytime**	**Nighttime**
Residential, Institutional, Educational	55	45
Industrial, Commercial	70	70

Where the existing ambient level exceeds Leq 45 dB(A), the maximum increase in the ambient noise level is to be limited to 3 dB(A)

The proposed site is located in an industrial zone and background sound measurement information has not yet been collected It is anticipated that noise from operating equipment will have little impact on the noise level beyond the property boundary

Another potential source of noise is the release of high pressure steam which occurs when safety valves in the plant are vented to the atmosphere While this noise can be quite loud, occurrence is rare Replacing existing steam power generating facilities with the proposed system will potentially reduce the frequency even further and will certainly not increase sound levels at receptor areas outside the property boundary

2 3 Water Quality

Water discharges from the Yerevan station include cooling tower blowdown, regeneration waste water from the demineralizer and pretreatment system, boiler blowdown, building and yard drains and sanitary watewater At present, these waste streams are discharged to drainage canals which flow to the river Discharge quality is claimed to be acceptable

World Bank standards for effluents from thermal power plants, to be achieved daily without dilution, are as follows

Parameter	Maximum Value
pH	6 - 9
Total Suspended Solids, mg/l	50
Oil and Grease, mg/l	10
Total Residual Chlorine	0 2
Chromium (total), mg/l	0 5
Copper, mg/l	0 5
Iron, mg/l	1 0
Zinc, mg/l	1 0

Data is not available to determine whether these discharge limits are presently achieved

2 4 Socio-economic

Operation of the proposed facility will have only minor social impacts on the local region The new units will be installed within the property boundary of the existing station and the existing workforce will be trained in the operation and maintenance of the new power generating equipment Working conditions within the facility will remain essentially unchanged The new plant will be entirely contained within a building whose appearance will be esthetically pleasing

D 1 e Managerial Plan to Mitigate Negative Impacts

1 Air Emissions and Emission Controls

Exhaust emissions for combined cycle plants are generally low due tot he high efficiency of combustion, especially when the combustion turbine is firing natural gas Nitrogen oxides (NOx0 is the major pollutant of concern NOx is formed in the combustion process either from thermal combustion of nitrogen in the combustion air (thermal NOx) or as a combustion product of fuel bound nitrogen compounds Since natural gas typically contains no fuel bound nitrogen compounds, NOx emissions are almost exclusively produced by the thermal NOx mechanism

The combustion turbines selected for this application will be equipped with dry, low NOx combustors (DLN) which limit NOx emissions to less than 25 vppmd corrected to 15 % O_2 when firing natural gas

NOx emissions could be further reduced by the installation of a selective catalytic reduction (SCR) system which utilizes injected ammonia as the reduction reagent Since the DLN technology meets or exceeds all target emission standards, SCR technology has not been considered for the design

NOx emissions may be limited to 42 vppmd when firing distillate fuel, but this requires the injection of water into the combustor to limit NOx production The proposed combustion turbines will be equipped with water injection capability and a source of high purity water will be made available for use during periods when distillate fuel is fired

Sulfur dioxide (SO_2) emissions from natural gas fired turbines are extremely low because natural gas typically contains almost no sulfur When firing distillate fuel, SO_2 emissions are controlled by limiting the sulfur content of the fuel oil

Particulate emissions from natural gas fired turbines are also quite low because the gaseous fuel typically contains no particulate matter and generates no sooty residue When firing distillate fuel, particulate emission control is accomplished by proper design and maintenance of the combustor

As indicated previously, it is likely that equipment containing or insulated with asbestos containing material (ACM) may need to be removed or modified as part of the construction activities and special consideration will be given to this activity Prior to commencement of any construction, a preliminary survey will be performed on equipment and appurtenances involved in the project to identify asbestos containing material (ACM) This survey is necessary to identify where ACMs are located in the plant, what is the physical condition of the ACM, estimate the quantity of ACM which will be removed and the amount of time and cost necessary to complete the removal, and prepare for proper disposal of the ACM The ACM survey will be performed by personnel trained to recognize ACM, and evaluate its

condition The actual removal of the ACM will be performed by personnel trained in the appropriate work practices for asbestos abatement which will involve

- Identification of sources and location of ACM to be removed
- The use of respiratory and protective clothing by workers and inspectors
- Isolating the work area where ACMs are to be removed from the surrounding areas
- Operation and maintenance of high efficiency particulate air filtration equipment
- Packaging ACMs for proper disposal as a hazardous waste
- Abatement area inspections and air sampling to assure compliance with acceptable limits

Rules and regulations for asbestos abatement have been adopted by many government authorities and such rules will be incorporated into the construction requirements for this project Contractors or others responsible for the construction activities will be required to comply with these regulations This will ensure that this work will have no significant impact on the environment or population

2 Noise

Equipment to be purchased for this project will be specified to meet specific sound pressure limits Sound pressure limits at receptors located outside the project property boundary will be minimized by enclosing major equipment items within building designed to provide sound attenuation No additional mitigation measures will be required

3 Water Quality

Waste water produced during the opeation of the new unit consisting of filter backwash, water treatment system regeneration waste, HRSG and gas turbine wash water waste, blowdown and equipment and sample drains will be combined and directed to the existing pH adjustment facility and then discharged to the drainage channel Oil/water separation devices will be provided to reduce pollution

D 1 f Environmental Monitoring Plan

The purposes of environmental monitoring are

- to monitor the construction and operation stages of the project in accordance with the recommendations of the environmental impact assessment (EIA)
- to note any changes compared to pre-project baseline conditions, compliance with regulatory requirements and, if any significant changes occur, to evaluate the need for corrective action

1 Air Quality Monitoring

Ambient air monitoring stations will be installed at sensitive locations well in advance of the operation of the system to develop baseline air quality information These stations will monitor for SO_2, NOx, particulates (dust) and CO Ambient air monitoring will be conducted through the life of the plant to identify any significant change in air quality

Each combustion turbine discharge stack will be equipped with a continuous emission monitoring system (CEMS) which will monitor SO_2, NOx, O_2 and flue gas discharge temperature Stack testing will be performed periodically to certify that the emission monitoring system is accurate

2 Noise Monitoring

Noise monitoring will be conducted at the boundary of the site and at any specified locations outside the fence Monitoring will be conducted with portable equipment at least twice a year while the unit is in operation

Noise monitoring will also be conducted within the plant operating area where noise levels are close to or exceed 85 dBA Ear guards will be provided to workers continuously exposed to noise levels exceeding 85 dBA

3 Water Quality Monitoring

The pH and temperature of the waste water discharges will be monitored continuously to ensure compliance with World Bank Guidelines Water discharge will be samples and analyzed periodically to ensure compliance with required discharge standards Should emission limits be exceeded, individual waste streams will be sampled and analyzed to determine the source of the problem and to help identify actions to correct the problem