PN-ACE-954
101325

FINAL REPORT

Covering Period October 1993-February 1998

Submitted to the Office of the Science Advisor
U S Agency for International Development

Multiple resistance to PVY by transformation of Solanaceous crops with engineered viral genes.

Principal Investigator **Aaron Zelcer**
Grantee Institution Agricultural Research Organization (ISRAEL)

Collaborator **Arie Rosner**
Institution Agricultural Research Organization (ISRAEL)

Collaborator **Bulat K. Iskakov**
Institution Institute of Molecular Biology and Biochemistry (KAZAKHSTAN)

With the assistance of **Dalia Wolf**
Agricultural Research Organization (ISRAEL)

Project Number CA 13-026

Project Duration October 1993-February 1998

Table of contents

page

3 Executive Summary 3

4 Research Objectives 4

5 Methods and Results

5 1 Optimization of transformation technology in "Microtom", a compact tomato cultivar suitable for in-vitro genetic manipulations 4

5 1 1 Adventitious regeneration and protoplast isolation and culture 4

5 1 2 Agrobacterium-mediated transformation of MicroTom leaf disks 5

5 2 Optimization of kanamycin-germination assays for studies on segregation of the NPT II selective marker 6

5 3 Design and generation of antisense oligonucleotides constructs 7

5 4 Transformation of tobacco with antisense constructs 8

5 5 Inhibition of the potato virus Y expression using antisense RNA approach 8

5 6 Generation of PVY replicase constructs 9

5 6 1 Construction of modified replicase gene by deletion 9

5 6 2 Construction of modified replicase gene by site-directed in-vitro mutagenesis 9

5 6 3 Construction of RdRP expression cassete 9

5 6 4 Transformation of tobacco and potato with PVY replicase constructs 10

6 Impact, Relevance and Technology Transfer 11

6 1 Training activities 11

7 Project Activities/Outputs 12

8 Project Productivity 14

9 Future Work 14

3. Executive Summary

Viral diseases represent a major constraint for Solanaceous crops in virtually all production areas In particular, moderate to heavy yield losses are caused in these species by potato virus Y (PVY) The overall aim of the project is the engineering of resistance to PVY in these crops, by transformation with viral sequences that would potentially interfere with PVY replication Two complementary strategies were attempted

1 Integration of a defective viral replicase gene in the plant host genome This approach capitalizes on the currently available information regarding the genomic composition of PVY A self-processing protease-replicase-coat protein gene complex of PVY was cloned and it's putative active site (the GDD motiff) was modified by site directed mutagenesis of the cloned gene complex Subsequently, the modified replicase gene with it's authentic flanking sequences was introduced into Solanaceous plants, as part of a self-catalytic complex that also contains a viral proteolytic peptide which is responsible for the in-vivo processing of the PVY polyprotein Transgenic tobacco plants harboring these constructs were evaluated for viral resistance The results don't support evidence for substantial resistance Full evaluation of this approach awaits future work

2 Antisense oligonucleotide sequences (AsO) to untranslated regions (UTR) of the PVY genome were synthesized and tested for their inhibitory effects on the *in-vitro* translation of the viral genome AsO with proven effectivity were subsequently introduced into Solanaceous species Promising levels of resistance were detected in transgenic tobacco harboring these constructs Future work is aimed at confirming and expanding these results

The intensive training of Kazakh young scientists in the participating Israeli laboratories was considered an additional goal and an imperative component of this program Three staff members of the Kazakh group spent a total of 20 months in the Israeli counterpart groups The trainees practiced extensively techniques for isolation and cloning of viral genes and their transformation into plants The capabilities of the Kazakh laboratory were substantially enhanced in the field of transgenic breeding for viral resistance, as well as in managerial aspects related to the participation in international research programs

4. Research Objectives

The overall aim of the project is the engineering of resistance to potato virus Y (PVY) in tomato and potato, by transforming these species with viral sequences that could eventually interfere with the expression or replication of the PVY genome

The specific research objectives include

1 Identification of antisense oligonucleotides (AsO) to various translated regions of the viral genome that exhibit inhibitory effects on in-vitro translation of the virus polypeptide
2 Generation of modified PVY gene constructs (replicase + protease), by site-directed mutagenesis of the replicase active site
3 Construction of Agrobacterium binary vectors carrying AsO inhibitory to translation (see 1), AsO sequences derived from the 5'-untranslated region (UTR) or modified PVY replicase sequences (see 2), that will be used for transformation of tobacco and tested for their potential inhibitory effects on viral expression or replication
4 Transformation of tomato and potato genotypes with promising constructs (as characterized in 3), and search for additive resistance effects in plants co-transformed with modified PVY replicase and AsO

5. Methods and Results

5.1 Optimization of transformation technology in "Microtom", a compact tomato cultivar suitable for in-vitro genetic manipulations.

MicroTom is an ornamental tomato cultivar released by Royal Sluis Inc (USA) Plant habit, fruit size and leaf size have been genetically reduced, resulting in the allegedly world's smallest tomato cultivar to date Plants can be grown in small containers to full maturity and are easy to handle Normally, MicroTom plants have a more prostrate growth habit than other dwarf tomatoes, making it suitable for hanging baskets According to our experience, when grown in strofoam planting trays at high density and appropriate fertilization regime, the growth habit of MicroTom is more erect and first mature fruits can be harvest as soon as 60-70 days from seeding These characteristics make MicroTom an outstanding model cultivar for genetic studies We therefore started work to evaluate the capabilities of MicroTom for tissue culture manipulations, such as adventitious regeneration from several explants, genetic transformation via Agrobacterium tumefaciens and protoplast isolation and culture Our results indicate that MicroTom is highly suitable for in vitro genetic manipulations and suggest that this cultivar may be used as an efficient model genotype for biotechnological studies on tomato in particular, and higher plants in the widest sense

5 1 1 Adventitious regeneration and protoplast isolation and culture

Best adventitious shoot regeneration was obtained in leaf explants cultured in Murashige & Skoog (MS) medium containing the following hormone combinations (in mg/l) zeatin (0 5) and IAA (0 05), or BAP (3 0) and IAA (0 1) Best development of callus tissue was observed in MS medium additioned with 2,4-D (1 0) and kinetin (1 0) Protoplast isolation and culture has been succesfully achieved using published protocols

5 1 2 Agrobacterium-mediated transformation of MicroTom leaf disks

The following protocol was adopted for leaf disk transformation of MicroTom, as a result of extensive evaluation of the various steps

Protocol for Agrobacterium-mediated transformation of leaf explants from Lycopersicon esculentum cv MicroTom

day 1	Thaw the Agrobacterium glycerol-culture Spot on LB plates containing appropriate selective antibiotics Incubate for 2-4 days at 29 C
day 4	Streak bacterial culture on new plates with identical medium Incubate for 3-4 additional days Preparation of feeder plates plate 2 ml of a log-phase Petunia hybrida cell-suspension onto plates containing solidified feeder medium. Place a guard-disk of filter paper on the cells Incubate at 25°C for 3 days
day 7	Inoculate bacterial strain on liquid medium with same composition Shake for 24 h at 29°C Preparation of explants Harvest healthy looking leaves from in-vitro grown tomato seedlings Place 1 X 1 cm explants onto filter disks in feeder plates Incubate at 25°C for 24 h
day 8	Spin-down bacterial culture, resuspend in liquid LB medium without antibiotics, and determine cell number by turbidy index Inmerse explants in diluted bacterial suspension for a short time (usually 5-20"), blot-dry explants on sterile filter paper, and place them back in same feeder plates
day 10	Blot-dry again explants, transfer to new plates containing appropriate regeneration medium + antibiotics to control Agrobacterium (normally, carbenicillin and vancomycin at 250 μg/ml each, or claforan at 500 μg/ml) and include selective agent (e g , 150 μg/ml kanamycin) Incubate at 25°C
Later	Subculture to new plates at 10 days intervals, until transformants are identified Well developed transformant shoots are transferred to rooting medium (see below) Rooted plantlets are hardened in Jiffy-7 peat mini-pots and subsequently transferred to insect-proof greenhouse

Media **Feeder** MS+3% sucrose, 2 ppm NAA, 1 ppm BAP

Regeneration MS+2% sucrose+1% mannitol 0 5 ppm zeatin, 0 05 ppm IAA

Rooting MS+2% sucrose, 2 ppm IBA

The relative efficiency of transformation is exemplified in the following table Agrobacterium tumefaciens 4404 containing two different constructs (both harboring NPT II under 35S promoter) were used in transformation experiments with leaf disks of MicroTom

	Construct A	Construct B	TOTAL
Total # explants	1925	925	2850
Regeneration foci under selective conditions	52 (2 7%)	18 (2%)	70 (2 5%)
Confirmed transgenic foci	43 (2 2%)	14 (1 5%)	57 (2%)
Total number regenerated shoots	84	33	117
Total number confirmed transgenic shoots	67 (79%)	26 (79%)	93 (79%)

The above table summarizes results from 10 independent experiments Considerable variability was observed among experiments The figures in the table above include also

faulty experiments that were totally or partially lost due to sporadic contaminants Actually, successful experiments reached a transformation efficiency of 6-8%

5 2. Optimization of kanamycin-germination assays for studies on segregation of the NPT II selective marker.

A simple method was developed to screen R1 progenies for segregation of the NPT II transgene and identification of transformant seedlings Two variations were tested 1 Non-sterile seeds are germinated on filter paper soaked with kanamycin solution, or 2 surface-sterilized seeds are germinated in-vitro in MS medium containing 3% sucrose and kanamycin Root development in untransformed seeds is highly sensitive to kanamycin (see fig 5), thus allowing for clear detection of transformed segregants before the actual inoculation

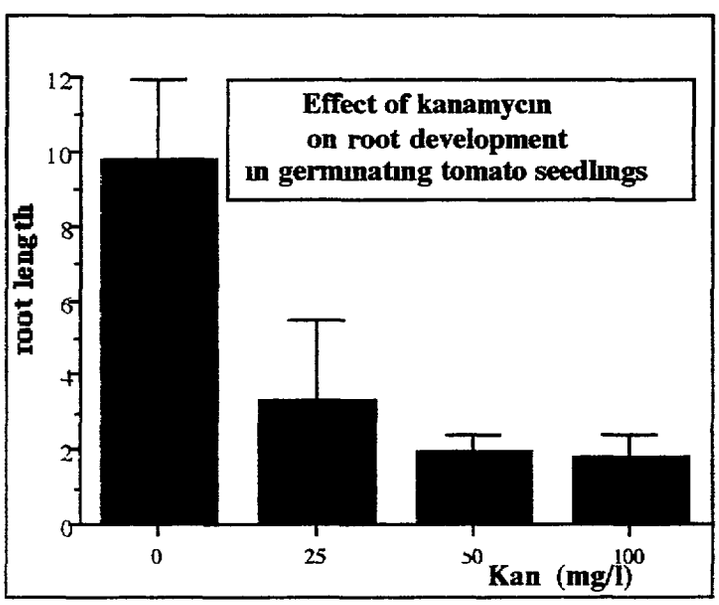

Fig 5 Effect of kanamycin on root development in germinating tomato seedlings

Seeds of the MicroTom cultivar were germinated for 10 days at 20° C on filter paper soaked in kanamycin solution The length (cm) of the main root of 10 seedlings was determined for each treatment

The kanamycin germination test allows for an accurate and fast evaluation of NPT II segregation and offers an indication on number of insertion sites for the different transgenic clones In the following, we include data on ratios of kanamycin resistant and kanamycin sensitive seedlings among progenies from individual tomato transformants

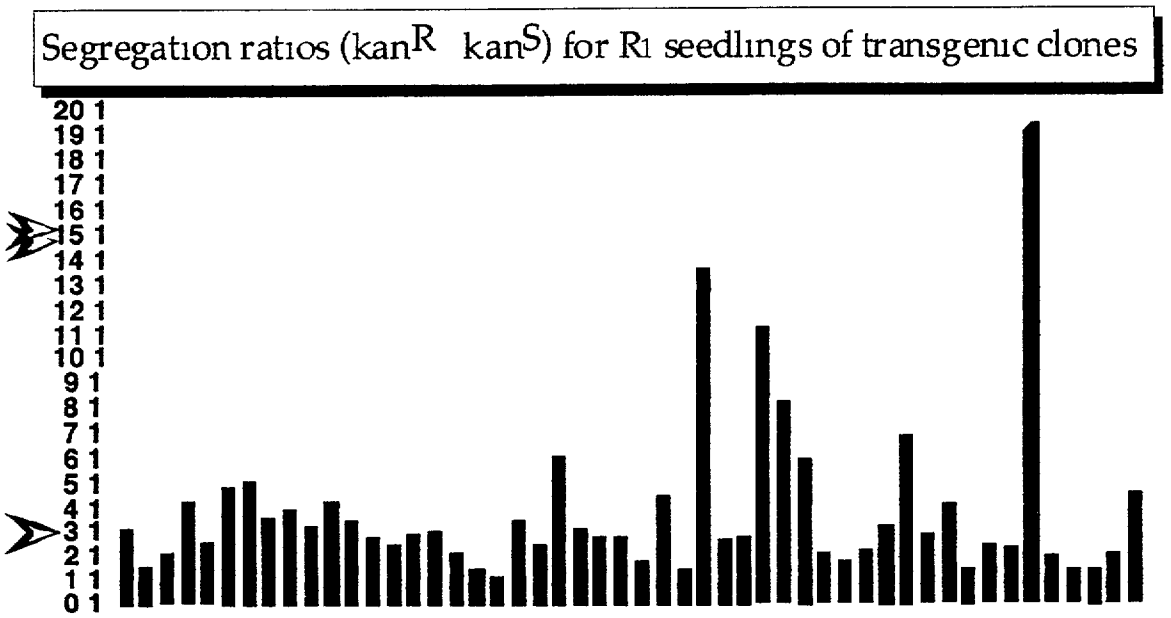

Fig 6

Segregation ratios between kanamycin-resistant and kanamycin sensitive seedlings in progenies of individual tomato transformants The arrows on the left indicate the expected ratios for clones harboring one insert (3 1) or two unlinked inserts (15 1)
Seeds were germinated in MS medium containing 3% sucrose and 100 µg kanamycin/ml. At day twelve, seeds were classified as resistant or sensitive, based on the length of the primary root (see fig 1)

5.3. Design and generation of antisense oligonucleotides constructs

Antisense oligonucleotide sequences (≥ nt) derived from the 5'-untranslated region (UTR) of PVY by PCR were cloned into the pBC vector
pKNAs1 (see fig 1) was constructed from pJD330 by replacing the ß-glucuronidase gene with a 100 nt DNA fragment containing the 5' UTR of PVY in the antisense orientation (AsO)

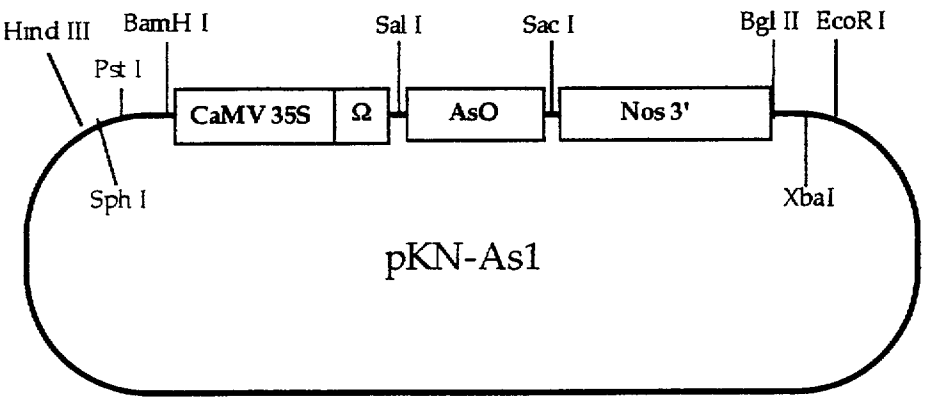

Fig 1 the structure of plasmid pKN-As1

The structure of the plasmid pKNAs1 was confirmed by DNA sequencing
The 0 8 kB fragment containing the CaMV 35S promoter, the Ω-fragment of TMV, AsO and nos 3'terminator was subcloned via standard techniques into the Hind III and Bgl II sites of pGA492, a binary plant transformation vector (fig 2) This construct was introduced into Agrobacterium tumefaciens strain EHA101 by electroporation The

transformed colonies were selected on medium containing kanamycin and tetracyclin (at 25 and 10 μg/ml, respectively)

5.4. Transformation of tobacco with antisense constructs

Antisense RNA-mediated (asRNA) inhibition of plant genes expression is well-documented, supporting its utility against viruses The oligonucleotides of 100 nucleotides complementary to sequences of the 5'-untranslated region (5'-UTR) including initiator AUG-codon of potato virus Y (PVY) RNA were tested for their ability to inhibit the translation of PVY RNA in wheat germ and rabbit reticulocyte cell-free systems It was shown that translation of PVY RNA was specifically inhibited up to 60% at the 100 fold molar excess of the asRNA The most efficient antisense oligonucleotides were selected and cloned into plant transformation vector pGA492
AsO constructs were prepared in different configurations (see table) To date, tobacco transformants harboring the different constructs were generated, and evaluation of response to challenging virus inoculation was started (see below)

Construct #	Code	Promoter	Enhancer	PVY sequence	orientation	terminator
1	pKNA1	35S	Ω	5'-UTR (100 nt)	antisense	NOS
2	pKNA2	35S	-	5'-UTR	antisense	NOS
3	pKNA3	35S	-	5'-UTR	antisense	NOS
4	pKNS1	35S	-	5'-UTR	sense	NOS

5.5. Inhibition of the potato virus Y expression using antisense RNA approach

Transgenic Nicotiana tabacum cv Xanti NN plants, expressing the antisense RNA to the 5'-UTR of PVY RNA were obtained by cocultivation method with A tumefaciens EHA 101 and evaluated for resistance to PVY

Table 1 ELISA test for leaves from transformed and untransformed tobacco plants, infected by PVY (25 mcg/ml)

	2 weeks after 1st inocul	4 weeks after 1st inocul	2 weeks after 2nd inocul
I Plants, transformed with As-oligos			
No 1	1 595	0 723	0 711
No 2	0 026	0 080	0 023
No 3	0 023	0 031	0 015
No 4	0 027	0 014	0 044
No 5	0 017	0 090	0 031
II Untransformed plants (control)	1 398	0 520	0 628
III PVY positive control	0 651	0 685	0 783
IV PVY negative control	0 012	0 090	0 028

5.6. Generation of PVY replicase constructs

5 6.1 Construction of modified replicase gene by deletion

The replicase gene of PVY was modified by deleting an internal 195 bp Xba I/Pst I fragment upstream from the GDD conserved motif, spanning nucleotides 7200-7395

5 6 2 Construction of modified replicase gene by site-directed in-vitro mutagenesis

The putative active GDD site of the replicase was located at position 352-354 of the viral polypeptide The corresponding coding sequence is GGT GAT GAC The GDD site was mutated by substituting the Gly codon (GGT) at position 352 in the peptide with a GCG triplet coding for Ala using a site-directed in-vitro mutagenesis procedure The modification was confirmed by direct DNA sequencing

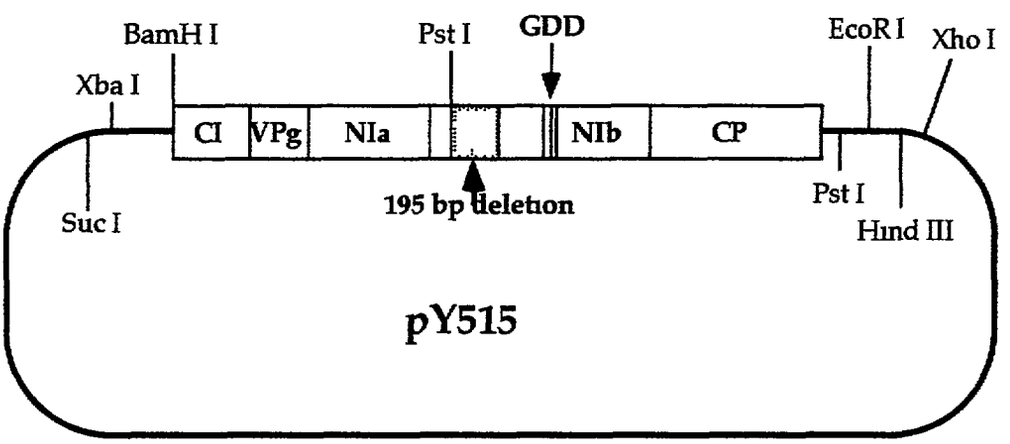

Fig 2. the structure of plasmid pY515

These constructs are being cloned into plant transformation vectors

5 6 3 Construction of RdRP expression cassete

To prepare the modified RdRP complex for expression in plants, the 35S promoter was inserted upstream and the nos-terminator downstream the gene complex

The expression casset in plasmid pJD330 (a PUC18 derivative) containing an "omega enhancer" was used (see enclosed plasmid map) The RdRP gene complex was cloned into this casset to be followed by further cloning of the construct into an agrobacterium transformation vector (pGA 492)

The cloning scheme main streps includes (a) Subcloning the nos terminator into pT7T3 plasmid, (b) Attaching the RdRP gene complex (BamHI/XhoI cleaved) to the terminator, and (c) The 355 promoter was introduced in front of the RdRP complex so that the whole construct could be cut out and cloned into the agrobacterium vector by a single BamHI and XhoI cuts (see enclosed-scheme)

The Agrobacterium vector pGA492 to be used contrained a single BglII site which is a close isoschisomer of BamHI It also contains a XhoI site in its polylinker region These

two sites will enable the insertion of a BamHI/XhoI fragment containing the expression casset with the RdRP construct

An alternative cloning strategy was also tested The RdRP gene complex was directly cloned into an expression casset already within an agrobacterium vector (pBI121 plasmid The pBI plasmid was cleaved with a ScaI schisomer which leaves blunt ends and with BamHI The cut-out GUS gene was replaced by XhoI made blunt and Bam HI cut RdRP complex this construct was ready for introduction into agrobacterium

Cloning scheme of RdRP complex

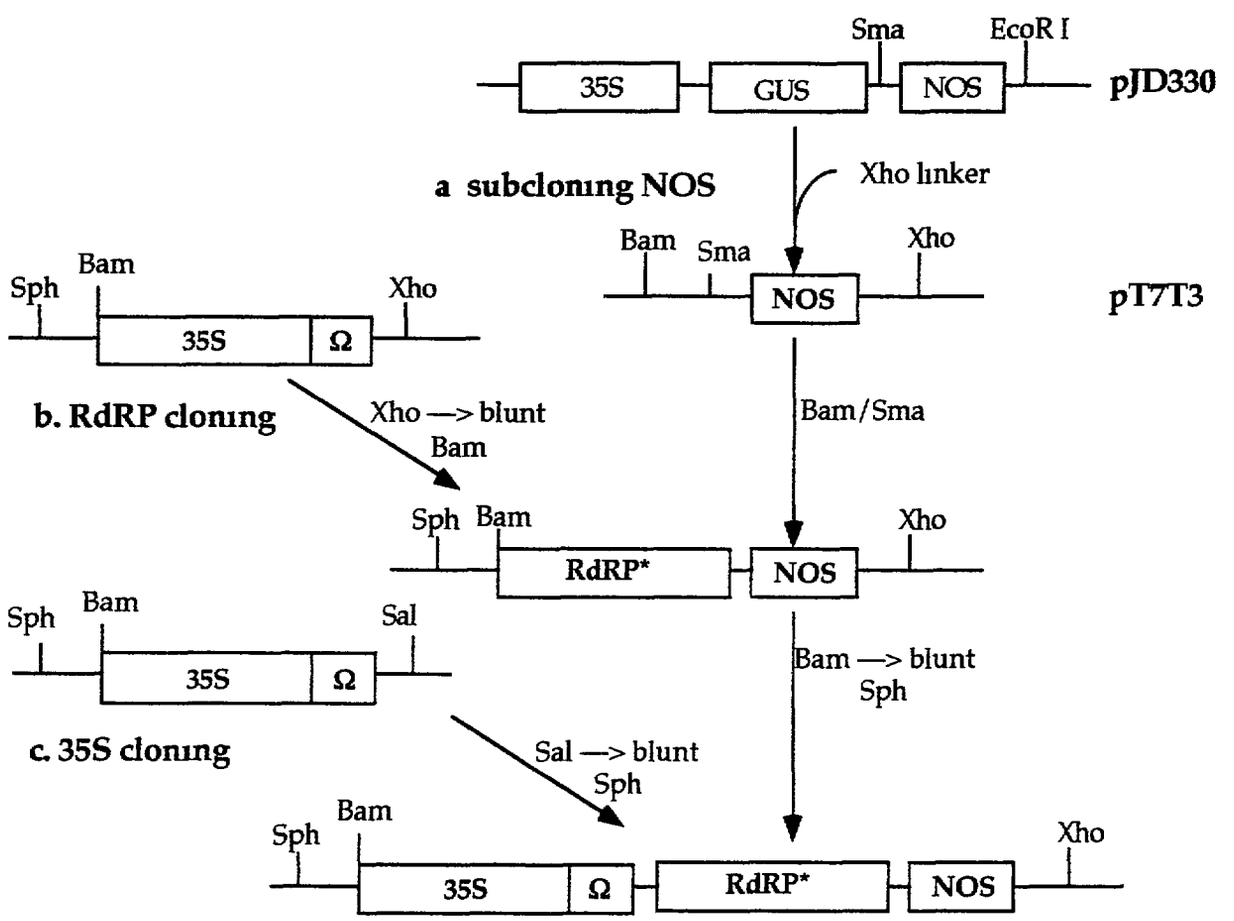

5.6.4. Transformation of tobacco and potato with PVY replicase constructs.

The different RdRP constructs were introduced in tobacco and potato by Agrobacterium-mediated transformation. Putative transformants were identified in kanamycin containing selective medium, and the presence of the transgene was finally confirmed by PCR Transgenic clones were challenged by mechanical inoculation with PVY Our preliminary observations don't provide evidence for increased viral resistance, based on symptomatology and ELISA checks Ongoing activities in the Kazakh laboratory will attempt to screen additional individual transformants to look for improved response to viral inoculation

6. Impact, Relevance and Technology Transfer

The Israeli scientists that visited Kazakhstan were very impressed by the existing experimental facilities at the IMBB The laboratory is well equipped for performing electrophoresis of nucleic acids and proteins (1-D and 2-D), chromatography (FPLC, HPLC), isotope labeling and general radioactive work, high speed and ultracentrifugation, isolation and characterization of nucleic acids and proteins, and general technology for cloning of DNA This capacity was enhanced substantially after purchasing equipment for the specific purpose of performing the present project, with the funds allocated to this purpose

This project developed new expertises in the collaborating Kazakh lab regarding the use of viral sequences for inducing transgenic resistance We anticipate that the Kazakh lab will be fully capable of performing similar projects with their own staff, as dictated by the specific requirements of the Kazakh environment Additionally, the Kazakh staff took active part in managerial decisions (funding, manpower, equipment purchase) which are common in programs funded by international agencies, and we believe this acquired expertise should add to the general capabilities for future collaborative endeavors

6 1 Training activities

Training of Kazakh young scientists represented a major activity of the project Three young staff members from the group of Dr Iskakov in Almaty participated in this training program Dr Kulpash Nurkyanova spent a total of 8 months in the laboratory of Dr Arie Rosner and was actively involved in cloning of constructs containing antisensense oligonucleotides or defective RdRP She was originally expected to stay for 6 months during 1994, however, by common decision of all the investigators Dr Nurkyanova was invited for an additional 2 months period during 1995, in order to perform additional training and to complete unfinished experiments

Mrs Oksana Kondratyeva spent a 6 months training period in the laboratory of Dr A Zelcer She was trained in techniques for tissue culture and genetic transformation of several species (in particular tobacco and potato) Mrs Kondratyeva was actively involved in the generation and characterization of tobacco transformants harboring antisense oligonucleotides from PVY in different configurations Some of these transformants were subsequently transferred to Almaty for further characterization and for evaluation of viral resistance

Subsequently, Mr Rashid Akbergenov spent 6 months working both with Dr Zelcer and Dr Rosner He was involved in finalizing the molecular work and in transformation activities in tobacco and potato The three trainees were highly motivated and performed enthusiastically and efficiently their share of the program We hope that they could find a stable and attractive position in their home country in order to apply the gained experience in further experimental activities of relevance to the development of Kazakhstan

7. Project Activities/Outputs

In November 1992, an Israeli scientific delegation visited Kazakhstan and identified potential partners for collaborative research within the framework of CDR The authors of this proposal were not acquainted with each other's scientific interests However, it was obvious to the delegation that both teams had common interest in developing transgenic resistance to PVY Interestingly, each team has adopted a different strategy, as reflected in the original proposal Therefore a rationale was jointly developed for collaborative work, based on the initial evaluation of individual strategies in each country, and a subsequent exchange of promising constructs and evaluation of additive effects between both antiviral approaches, to be performed coordinately by both teams During an early visit of Dr Bulat to Israel (within the framework of a visit from a scientific delegation from Kazakhstan), the three collaborators could meet and discuss all future aspects of the program

The three cooperating investigators (Zelcer, Rosner, Iskakov) were to meet during the International Congress for Plant Molecular Biology (Amsterdam, 18-24th June) Dr Iskakov intended to present a paper entitled "Properties of the novel small RNA from wheat embryo ribosomes" (see in the following) The attendance of the PIs from both countries was covered by funds from the project Unfortunately and in spite of the fact that ARO payed in advance the registration fees for Dr Iskakov and made all the necessary arrangements, the Kazakh collaborator couldn't actually attend the meeting due to the lack of a Dutch visa (consular assistance is unavailable in Alma-Ata)
The PI (A Z) visited the collaborating Kazakh group in Almaty for one week during October 1995 At that opportunity, he became acquainted with the staff of the Institute of Molecular Biology and Biochemistry The PI was invited to meet members of the Kazakh Academy of Sciences, the General Director and the Deputy Director of the Kazakh National Center of Biotechnology, and discussed with them the progress of this particular project and the feasibility for initiation of additional projects There was ample opportunity for discussions with the Kazakh co-PI (B I) and other participating members from his group on the progress achieved in the program and on planning continuation The PI reviewed recent developments in the field of transgenic breeding of agricultural crops during a seminar he presented at the Institute of Molecular Biology & Biochemistry The PI was also invited to visit the State University of Kazakhstan in Almaty, and met several groups working on related subjects

Dr Iskakov visited Israel during August 1996, to discuss the progress in the project and to attend the Xth International Congress of Virology, where he presented part of his work Likewise, Dr Rosner visited Kazakhstan and the collaborating laboratory and reviewed all relevant activities concerning viral resistance and characterization of promising genotypes
Dr Iskakov presented results of his group as posters in two international meetings The respective abstracts are included in the following No full publications have yet resulted from this program We hope to eventually release our data on AsO-mediated resistance if the promising preliminary results can be confirmed and expanded

PW50-7

EFFECT OF THE NOVEL SMALL RNA DETECTED IN WHEAT EMBRYO RIBOSOMES ON TRANSLATION OF mRNA WITH VIRAL 5 LEADER SEQUENCE

B K. Iskakov M A Shmanov N S Polimbetova
S Sh Zhanvbekova A V Lee N N Galiakparov

The Ajtkhozhin Institute of Molecular Biology and Biochemistry
86 Michurin St 480012 Almaty Kazakhstan

Abstracts Proceedings,
4th International Congress
of Plant Molecular Biology
Amsterdam, June 1994

The influence of heat shock (HS) induc ble 5 3S RNA on the *in vitro* polypeptide synthesis at normal and HS temperatures was studied Two mRNAs each coding for GUS and differing only in the structure of 5 untranslated region (5 UTR) were used as messengers One of them contained (while another did not) the 5 UTR from TMV RNA (*omega*) which is known to confer to the non-HS mRNAs the ability to be efficiently translated under HS conditions The *omega* is also known to have the translation enhancer activity Direct addition of purified 5 3S RNA to WG cell free translation system resulted in increase of the *omega*-dependent enhancing effect from 6 to 12 fold at normal (26°C) temperature and from 10 to 350 fold at HS (37°C) temperature Analogous addition of 5S or 5 8S ribosomal RNAs did not result in similar changes These data demonstrate that 5 3S RNA has clear discriminatory effect on the translation of different mRNAs and the mechanism of this effect requires an additional detailed investigation

300

PROPERTIES OF THE NOVEL SMALL RNA FROM WHEAT EMBRYO RIBOSOMES

B. Iskakov S Zhanvbekova K Madin S Smailov A Lee
N Polimbetova
Institute of Molecular Biology and Biochemistry
86 Michurin str 480012 Almaty Kazakhstan

Abstracts Proceedings,
Xth International Congress
of Virology
Jerusalem, August 1996

When we studied the fate of wheat embryo cellular mRNAs under the heat shock conditions we have found that they accumulate in the 48S translation preinitiation complexes In their composition we have detected a new small RNA (5 3S RNA) of about 135 nucleotides that was the most abundant The data on the properties of 5 3S RNA can be summarized as follows 1) it is always bound to ribosomal (RS) material - polysomes 80S RS native 40S RS and never found in RS-free cellular fractions, 2) 5 3S RNA is tightly bound to RS and can not be washed out with 0 5M KCl 3) after dissociation of 80S RS in high-salt buffer the 5 3S RNA remains to be bound to 40S RS 4) at the normal temperature conditions (25°C) the 5 3S RNA is present only in 5 to 10% of wheat germ (WG) RS whereas after heat shock treatment (1 hour at 37 °C) its amount increases at least 5 times and about 30 to 50% of RS become 5 3S RNA containing 5) 5 3S RNA was found in many plant species tested but could not be detected in rabbit reticulocytes 6) according to preliminary studies 5 3S RNA exists in RNP form 7) the isolated 5 3S RNA can specifically bind to WG eIF-2 with a high affinity but do not interact with WG EF-2 which is known also to possess the RNA binding activity These data suggest that 5 3S RNA may be involved in regulation of protein synthesis in wheat embryos at the level of translation initiation at least under heat shock conditions

BEST AVAILABLE COPY

8. Project Productivity

The project fully accomplished the training goals and the capacity enhancement of the collaborating group in Kazakhstan This is undoubtedly the major accomplishment of the program and its major contribution to development On a scientific level, substantial accomplishments were obtained in the optimization of transformation and the characterization and utilization of AsO for transgenic resistance to PVY The use of modified replicase constructs for generating resistance to PVY will require further experimentation for a full evaluation of their usefulness Likewise, combining AsO and RdRP sequences for pyramiding resistance to PVY had to be postponed for future work, due to inconclusive results with RdRP constructs

9. Future Work

A full characterization of AsO-mediated in the generated transgenic plants is still an ongoing activity in the Kazakh laboratory The promising preliminary results fully justify the continuation of these aspects and their further investigation for additional viruses