PN-ACD-785

COMBINED CYCLE PRINCIPLES COURSE

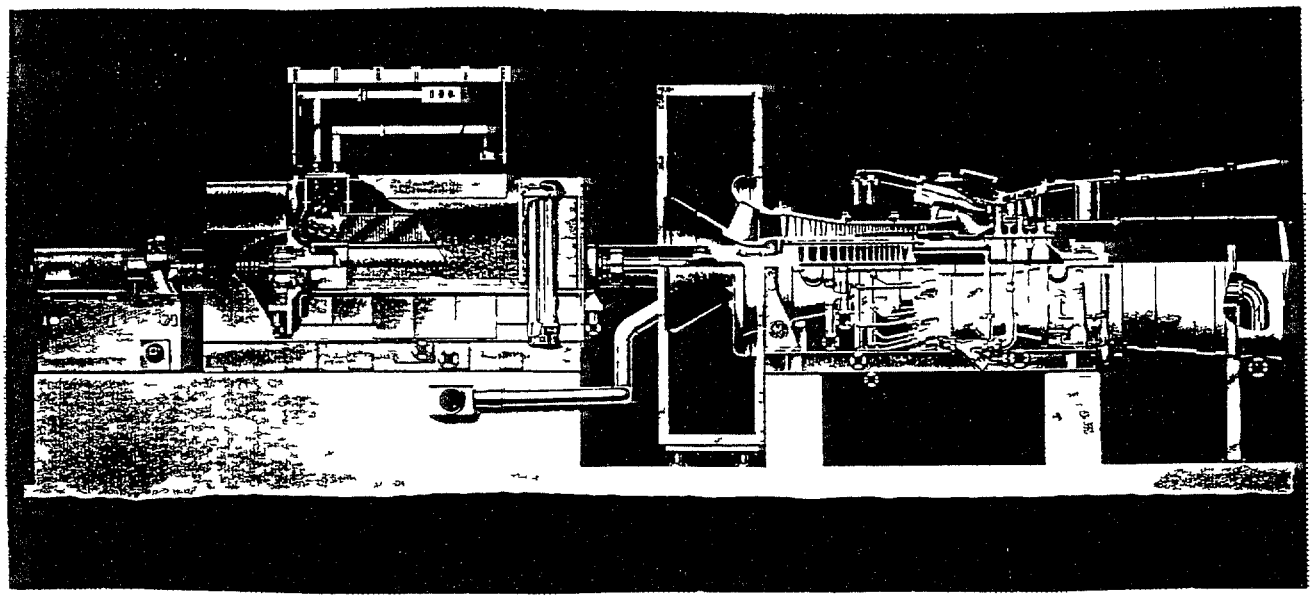

PRESENTED BY:

Fossil Consulting Services, Inc
10015 Old Columbia Road, C 220
Columbia, MD 210146

INSTITUTE OF INTERNATIONAL EDUCATION
1400 K STREET N W WASHINGTON DC 20005 2403

Table of Contents

Power Plant Thermodynamic Principles

2 Introduction To Combined Cycle Power Generation

3 Steam Turbine

4 Heat Recovery Steam Generator

5 Plant Configuration And Heat Mass Balances

6 Gas Turbine/Generator

7 Plant Controls

8 Integrated Combined Cycle Plant Operation

9 Cooling Towers

10 Heat Exchangers

AVERY PROFESSIONAL LINE READY INDEX BINDER

PN-ACD-785

Topping cycle fuel cells effective combined with turbines

Integration of combined-cycle power plants with fuel cells is suggested to optimize efficiency

By V MINKOV M KRUMPELT E DANIELS and J G ASBURY, Argonne National Laboratory

Fuel cells should be used as topping cycles with conventional steam or gas turbines rather than stand alone alternatives Lower energy costs are obtained when the fuel cell capacity in the system is 30 40% instead of 60% as advocated in earlier studies In such a mode the fuel cell is more than 50% efficient and cost effective

A fuel cell Figure 1 converts energy associated with a chemical reaction directly to electricity The reactants fuel and oxidant are fed to separate anode and cathode electrodes where electrochemical reactions take place The electrodes are separated by electrolyte that serves as a transport medium for the ions The electrochemical reactions coupled with the transport of ions through the electrolyte generate an electric potential difference that promotes electron flow through an electric load

Three major types of fuel cells are presently being considered for power plant applications phosphoric acid (PAFC) molten carbonate (MCFC) and solid oxide (SOFC) The system wise difference between them is principally their operating temperatures—400 F for the PAFC 1000 1300 F for the MCFC and 1800 F for the SOFC All have different types of electrochemical reactions

Fuel cell operation is not dependent on the flow of heat between a thermal source and a sink as in a heat engine therefore the cells are not subject to the thermodynamic Carnot limitations Thus the efficiency of fuel cells may be as high as 70 80% However because of the electrical resistance of cell components some heat is generated and must be removed It is removed either by the fuel and air flows or by a separate cooling medium The major characteristics of various types of fuel cells are presented in Table 1

Because operating temperatures of the three types of cells are so different the means for converting the heat varies Because of space limitations this article will discuss only details of the MCFC but will outline the general principles which should govern the system designs of the other types of cells

Fuel cell power plants

Fuel cell power plants can be designed with fuel cells as the only source of energy or in combination with gas or steam turbines Combining with gas and steam turbines is usually more economical for the following reasons

1 The real efficiency of the fuel cell is relatively low (40 50%) when the fuel cell is used as the sole power source and the fuel cells fuel utilization exceeds 70 80% (The fuel cells fuel utilization represents a ratio of the amount of fuel converted electrochemically in the cells to the total amount of fuel entering the cells the non converted amount of fuel passes through the cells and is burned in a combustor following the cells) This low efficiency is due to low fuel concentrations near the exit of the fuel cell which decreases the cell voltage and causes the efficiency of converting incremental amounts of fuel to fall below that of turbine based cycles

2 When the fuel cell is operated at low current densities (amperes/unit cell area) the specific cost of fuel cells ($/kW) is high compared to turbine based cycles As the fuel cells fuel utilization is increased the average current density decreases The reason is that the high mass transport rates of the gas phase to the electrode surfaces cannot be sustained when the fuel becomes dilute

Both factors suggest an integrated approach to fuel cell system design in which a combustion turbine is fueled by the depleted fuel from the fuel cell In such a system the fuel cells fuel utilization is treated as a system variable with its optimized value based on the minimum system cost of electricity

A simplified fuel cell power plant realizing the principles described is shown schematically in Figure 2 After being compressed air enters the cathode side of the fuel cell while the clean gaseous fuel enters the cell on the anode side The clean gaseous fuel comes from a gasifier/cleanup system operating on

3

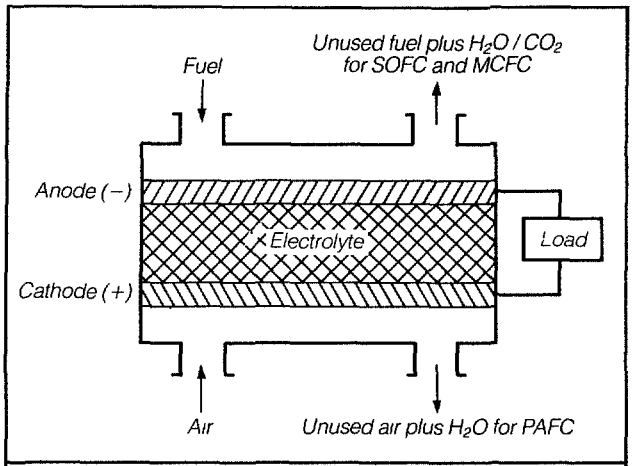

Figure 1 Fuel cell conceptual design

coal steam and compressed oxidant which is injected into the gasifier

Adjacent to the gasifier/cleanup system is a cooling system that conditions the temperature of the clean fuel to a level suitable for a particular type of fuel cell Air and clean fuel enter the cell and participate in the electrochemical reactions The fuel cells have cooling systems to remove the heat and keep fuel cell temperatures at the acceptable levels Table 1

Both flows enter a combustor where the rest of the fuel which has not reacted in the cell is fully oxidized before entering a gas turbine After passing through the gas turbine the combustion gas passes to a steam generator and then to the atmosphere

In designing an efficient power plant for a given type of fuel cell it is important to consider

1 What is the best power plant component arrangement?

2 What are the best operating parameters and conditions?

3 What is the best power generation distribution between fuel cells and gas/steam turbines?

A review of other projects (Ref 1 2 3) revealed that the optimum design has not yet been achieved For example the fuel utilization in the fuel cells was specified at 85% for reasons that were unrelated to system economics In view of the relations between fuel cell and turbine costs discussed earlier it appeared that these system designs would be less than economically optimal

To make the designs economically optimal a design should be based on the following premises

Heat must flow sequentially through the fuel cell high temperature gas turbine and the low temperature steam turbine

Used fuel leaving the anode must be routed directly to the gas turbines

The portion of fuel converted electrochemically in fuel cells should be decreased to reduce the fuel cell section cost and to increase the bottoming section efficiency

A good example appears in Figure 3 which represents an MCFC power plant arrangement for a 575 MW plant utilizing gasification technology

Coal slurry and oxygen enter the gasifier where coal is gasified at 600 psi The raw fuel gas is cooled to 100 F in the boiler and the clean gas reheater prior to entering the acid gas removal unit where H_2S and COS are removed After solvent regeneration the acid gas stream is further treated for the removal of sulfur

After cleaning the fuel gas flows through the clean gas reheater and expansion turbine On leaving the turbine it is mixed with a predetermined amount of steam This prevents carbon deposition in the fuel cells

The fuel/steam mixture is reheated to 1000 F at approximately 100 psi before entering the anode side of the cell where a portion of the fuel is consumed Leaving the anode the depleted fuel passes through the same heat exchanger where preheating of the clean inlet fuel occurs In passing through the burner the fuel is oxidized by the exiting cathode gas The resultant combustion gas at temperatures of 1800-2000 F is then expanded in the gas turbine to provide compression shaft power and net electricity

When the gas passes through the gas turbine the still hot gas is used to preheat the cathode air up to 1000 F and to generate steam in a series of superheaters boilers and economizers At this point the stream splits into two parts one part exits the system through the stack and the other part after addi

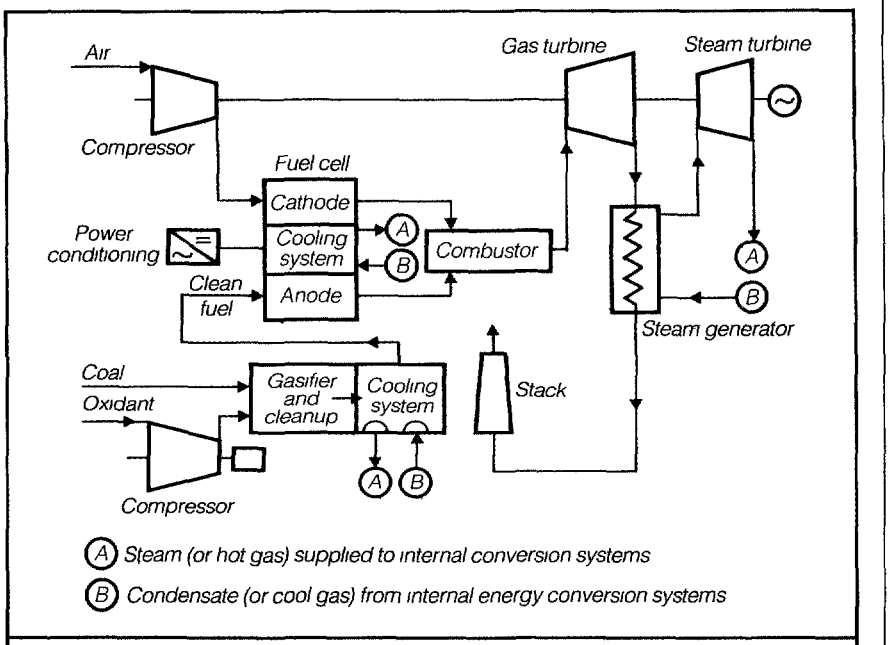

Figure 2 Simplified fuel cell based power plant design

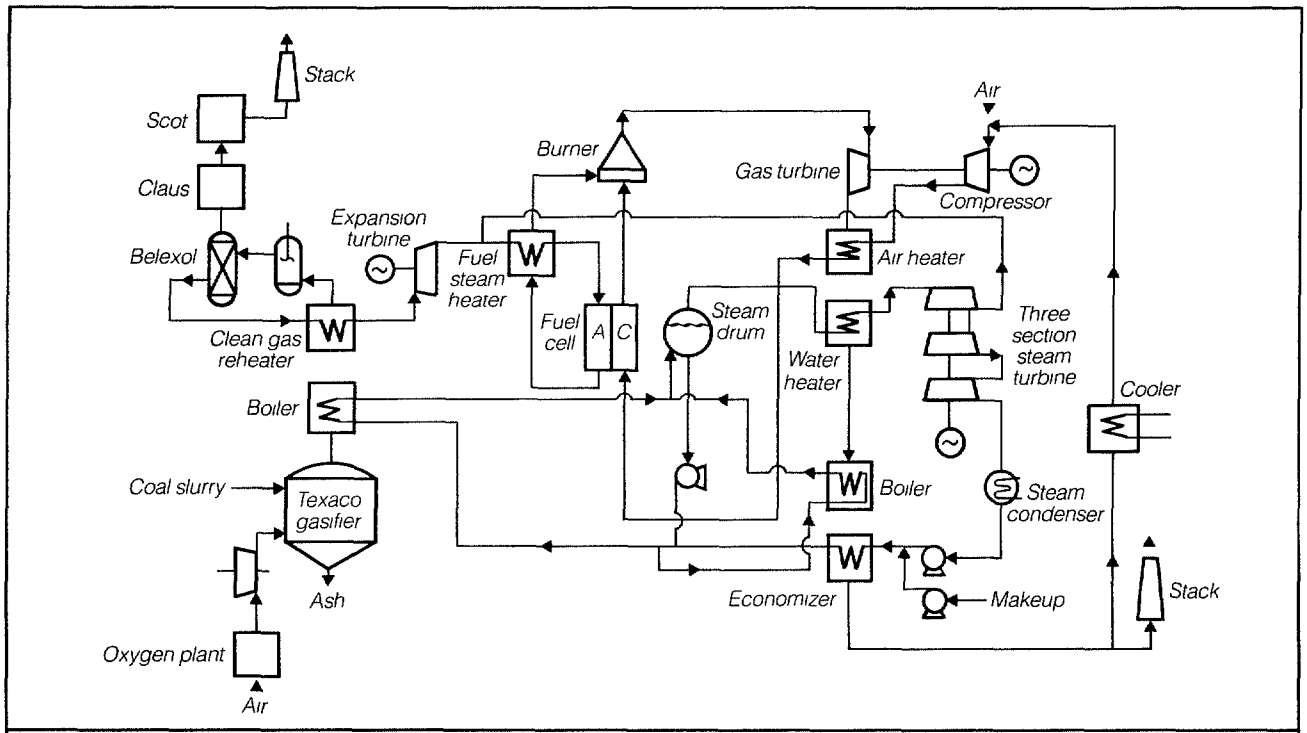

Figure 3 MCFC optimized power plant design

tional cooling is recirculated to supply carbon dioxide to the air inlet stream CO_2 must be supplied to the cathode of molten carbonate fuel cells Table 1

The three section steam turbine consists of high intermediate and low pressure turbines Steam is extracted from the high pressure turbine for injection into the fuel stream of the MCFC This steam prevents carbon deposition Steam from the high pressure turbine flows through the intermediate and low pressure turbines

After the steam has been condensed the condensate flow merges with make up water before passing through the economizer Leaving the economizer the feedwater mixes with water from the steam separator (drum) and then is distributed to the gasification system s and the bottoming section s boilers Both steam flows merge again in the separator (drum) where the saturated steam is superheated prior to entering the steam turbines

The next step after an optimum configuration is developed is to find optimum operating parameters and conditions in particular fuel utilization and current density

It is well known that the optimal system configuration and parameters are a function of many economic and technical factors like the cost of capital rate of inflation escalation rate taxes cost of fuel size of power plant assumed modes of operation and the capital cost of different components

In this analysis the economic financial assumptions are based on a constant dollar analysis (1984 dollars) consistent with the procedures of the 1982 EPRI technical assessment guide methodology

The graph in Figure 4 shows a substantial decrease in energy costs as the fuel utilization decreases At a current density of 1800 A/m which is typical for MCFC systems the cost of energy is still not at a minimum at the lowest utilization of 45% Nevertheless it is several mills/kWh below the estimated energy costs of MCFC systems previously reviewed Very clearly a fuel utilization of 85% in the fuel cell as commonly proposed for central station power plants is not cost effective

At current densities of 3000 5000 A/m^2 the cost of energy passes through a minimum at fuel utilizations of 50 60% In brief the economic competitiveness of the fuel cell system depends on the fuel utilization and the current density Both operating variables reduce the impact of the specific fuel cell stack on total system cost

Power distribution vs fuel utilization for the MCFC power plant is presented in Figure 5 As the fuel utilization of the fuel cell decreases its output also decreases from over 50% down to 30% Likewise the gas and steam turbines share of the power output increases At a fuel utilization of 55% which lies in the optimal zone the power sharing of the fuel cell gas and steam turbines will be 35 47 and 17% respectively

Any significant deviation from these values will make the fuel cell system less competitive In general at fuel utilizations lower than 50 60% the decrease in total system efficiency offsets the capital cost reduction from the fuel cell At higher utilizations the gains in system efficiency are not sufficient to justify added fuel cell stacks

Technology comparison

The cost of energy of an optimized MCFC system was compared to a pulverized coal combustion plant with flue gas desulfurization a coal gasification based combined cycle and the MCFC design Ref 6 Heat rates were estimated for all four plants using a power plant simulation code Ref 5 and the performance assumptions tabulated in Table 2

The table shows that the optimized MCFC system is less efficient than the MCFC system reference 6 but is more efficient than any of the two competing

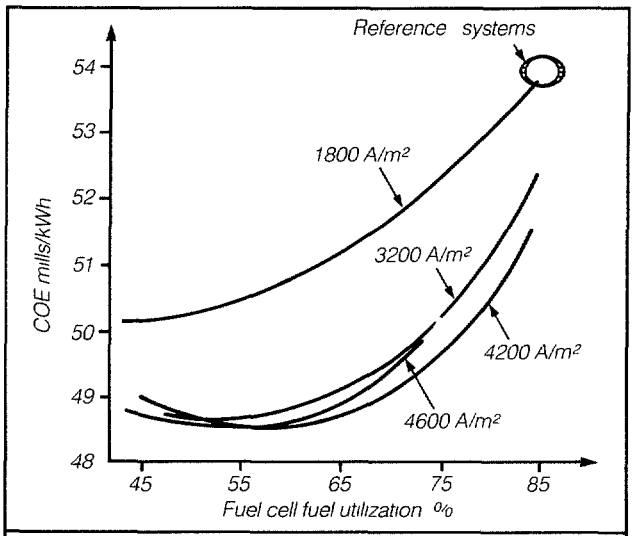

Figure 4 Cost of electricity vs % fuel cell fuel utilization for various current densities

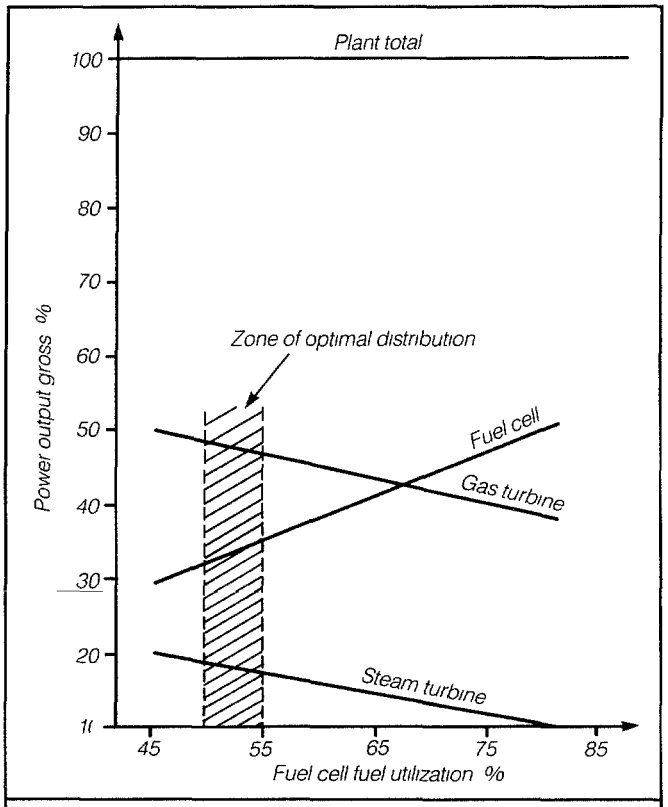

Figure 5 Power generation output vs % fuel cell fuel utilization

technologies Fixing the plant size at 575 MW the equipment costs were estimated for all major components of the competing systems Costs of electricity were then calculated using EPRI s technical assessment guide The results are given in Table 3 The energy costs for the three power plants are almost identical while the cost of energy of the non optimized MCFC system is approximately 15% higher

Other utility benefits

To be attractive to utilities the cost of electricity from a fuel cell power plant should be at least equal to that of conventional pulverized coal or combined cycle power plants However the potential for reduced costs is not the only benefit of fuel cell systems For example atmospheric pollutants are much lower in fuel cell systems than conventional power plants

One reason is that present fuel cells require a very clean fuel Before entering the cells the sulfur has to be removed to levels much lower than those required by existing environmental regulations A second reason is that electrical energy is generated by an electrochemical process in a fuel cell rather than by combustion so no NO is formed although some NO will still be formed in the bottoming turbines

Because the size of fuel cells ranges from 100 1000 kW fuel cell power plants can be built in relatively small increments to match changes in load

Table 1 Fuel cell characteristics

Characteristics	PAFC	MCFC	SOFC
Fuel	H_2	H_2 CO	H_2 CO CH_4
Oxidant	O_2	O_2	O_2
Electrolyte	Liquid phosphoric acid	Molten potassium and lithium carbonate salts	Solid zirconium dioxide
Anode reaction	$H_2 = 2H + 2e$	$H_2 + CO_3^2 = CO_2 + H_2O + 2e$	$H_2 + O^2 = H_2O + 2e$
Cathode reaction	$1/2\,O_2 + 2H + 2e = H_2O$	$CO + CO_3^2 = 2CO_2 + 2e$ $CO_2 + 1\,2\,O_2 + 2e = CO_3^2$	$CO + O^{2-} = CO_2 + 2e$ $1/2\,O_2 + 2e = O$
Overall reaction	$H_2 + 1/2\,O_2 = H_2O$	$H_2 + 1/2\,O_2 = H_2O$ $CO + 1/2\,O_2 = CO_2$	$H_2 + 1/2\,O_2 = H_2O$ $CO + 1/2\,O_2 = CO_2$ $CH_4 + 2CO_2 = CO_2 + 2H_2O$
Cooling medium	Air or steam/water	Air	Air
Operating temperature	400 F	1000 1300 F	1800 F
Operating pressure	15 150 psia	15 150 psia	15 psia
Could be presented in a mixture of different gaseous species		Non optimized pressure the optimized pressure may be different	

6

Table 2 Performance of subsystem I components

Steam turbines	
Maximum inlet temperature and pressure	1000 F and 1800 psia
Condenser pressure	2 5 in Hg
High pressure (>30 atm) turbine isentropic efficiency	0 85
Low pressure (<3 atm) turbine isentropic efficiency	0 82
Intermediate pressure (3 30 atm) turbine isentropic efficiency	0 86
Gas turbine isentropic efficiency	0 87
Compressors	
Axial isentropic efficiency	0 82
Centrifugal isentropic efficiency	0 65
Pump efficiency	0 75
D C to A C inverter efficiency	0 96
Plant stack exhaust temperature	260 F
Phosphoric acid fuel cells	0 66 V at 475 mA/cm² and 45% fuel utilization
Molten carbonate fuel cells	0 6 V at 400 mA/cm² and 65% fuel utilization

demand This avoids large capital investments Of course pulverized coal or combined cycle power plants could be built in small increments but the economic penalty is heavy because the specific costs of turbomachinery increase significantly as design capacity is reduced

Fuel cells have relatively constant specific costs regardless of design capacity In addition fuel cell power plants maintain relatively high efficiencies at reduced load while in the turbine based systems the efficiency drops sharply This factor will benefit electric utilities with daily or hourly changing load demands **END**

References

1 J M King Integrated coal gasification molten carbonate fuel cell power plant NASA report CR 134955 (1976)

2 K M Parker Development of molten carbonate fuel cell power plants—reference design description DOE report DOE FT 17019 TG (1982)

3 S Brown *et al* Site specific assessment of a 150 MW coal gasification fuel cell power plant EPRI report EPRI EM 3162 (1983)

4 Lichatsky and Cairns *Fuel cells and fuel batteries* John Wiley & Sons New York (1968) pp 463 470

5 H K Geyer and G F Berry The system analyses language translator (SALT) user guide ANL FE 85 3 (1985)

6 TAG Technical assessment guide EPRI P 2410 512 May (1982)

AUTHORS

Vladimir E Minkov is involved with development and optimization of MHD power plants, advanced cogeneration systems fuel cell based power plants for utilities and cogeneration applications, and advanced power generation methods with Argonne National Laboratory, Argonne, IL

Dr Michael Krumpelt is responsible for fuel cell systems analysis at Argonne National Laboratory, Argonne IL He has been associated with fuel cells for the past eight years, and has 20 years of experience in chemical process development in industry He consults for the Department of Energy on several fuel cell R&D projects

As an energy systems scientist with Argonne National Laboratory Argonne IL Edward J Daniels focuses on evaluating the market potential relative economics and R&D requirements for new technologies in a variety of applications including fuel cell systems industrial cogeneration and processing of recycled metals

Joseph Asbury is director of strategic planning at Argonne National Laboratory, Argonne IL His office manages the laboratory s planning process and administers Argonne s R&D programs for non DOE sponsors He received his PhD in physics from Purdue University

Table 3 Cost components for cost of electricity estimates

Equipment	Cost components (mills/kWh) PC/FGD	GTCC	MCFC[1] Lit	MCFC[2] Opt
Coal handling and preparation	0 81	0 98	0 84	0 78
Oxidant preparation	0 00	2 23	1 91	1 91
Gasification cooling and ash handling	0 00	3 55	2 89	3 00
Desulfurization	2 51	0 71	0 00	1 26
Iron oxide guard	0 00	0 00	1 18	0 13
Sulfur recovery and tail gas treating	0 00	0 24	0 12	0 21
Shift conversion	0 00	0 00	0 20	0 00
Fuel cells	0 00	0 00	0 00	2 04
Power conditioning	0 00	0 00	4 53	0 63
Steam turbine generator set	4 08	0 49	1 02	0 27
Gas turbine generator	0 00	1 84	0 45	1 06
Heat exchanger steam generation	3 80	1 10	0 56	0 93
Cooling tower	0 49	0 25	0 65	0 22
Electrical equipment and instruments	2 51	2 48	0 22	2 51
General facilities	2 10	2 00	2 59	2 09
AFUDC	1 53	1 49	2 33	1 60
Other capital charges	1 10	0 88	1 83	0 92
Fuel cell replacement	0 00	0 00	0 98	1 45
Subtotal	18 93	18 25	27 08	21 01
Operation and maintenance				
Fixed O&M	6 50	8 34	11 12	8 72
Variable O&M	1 62	2 09	2 78	2 18
Subtotal	8 12	10 43	13 90	10 90
Fuel	21 40	20 18	15 81	16 80
Total cost of electricity	48 45	48 86	56 79	48 71

[1] Literature design [2] Optimized design

AGENDA FOR
COMBINED CYCLE PRINCIPLES COURSE
CURITIBA, BRAZIL
MARCH 17 THROUGH 21, 1997

Monday - March 17, 1997

8 30-9 00 AM	Opening/Welcome
9 00-10 00 AM	Thermodynamic Principles Heat transfer First and second law Carnot Cycle Steam Properties
10 00-10 15 AM	Break
10 15-12 00 PM	Combined Cycle Principles Brayton Cycle Rankine Cycle Efficiency Comparisons Economic Comparisons
12 00-1 30 PM	Lunch
1 30-3 00 PM	Introduction to Combined Cycle Power Generation Theory and operation Cycle parameters Impact on power production Benefits of Combined Cycle Fuel Considerations
3 00-3 15 PM	Break
3 15- 5 00 PM	Gas Turbine/Generator Main components Compressor Burners Gas Turbine Generator

Tuesday - March 18, 1997

8 30-10 00 AM	Gas Turbine/Generator (Cont'd) Gas Turbine Theory Components Operation Efficiency factors
10 00-10 15 AM	Break
10 15-12 00 PM	Gas Turbine/Generator (Cont'd) Support Systems Operation and Maintenance Considerations Performance
12 00-1 30 PM	Lunch
1 30-3 00 PM	Heat Recovery Steam Generator Function Principles Flow Path
3 00-3 15 PM	Break
3 15- 5 00 PM	Heat Recovery Steam Generator (HRSG) Components Inspections

Wednesday - March 19, 1997

8 30-10 00 AM	Steam Turbine/Generator Principles Components
10 00-10 15 AM	Break
10 15-12 00 PM	Steam Turbine/Generator (Cont'd) Valving Lube oil systems Gland steam system
12 00-1 30 PM	Lunch

1 30-3 00 Steam Turbine/ Generator
Electrohyraulic Control systems
Turbine Supervisory System
and Loading
Controls Starting

3 00-3 15 PM Break

3 15- 5 00 PM Heat and Mass Balances for Combined Cycle Plants
Design Criteria
Plant Configuration Screening
Plant Configuration, Selection, and Preliminary Description

Thursday - March 20, 1997

8 30-10 00 AM Combined Cycle Plant Controls
Gas Turbine Controls
Steam Turbine Controls
HRSG Controls
Generator Controls
Plant Distributed Control System

10 00-10 15 AM Break

10 15-12 00 PM Integrated Combined Cycle Plant Operation
Start Up
Operation
Shut down
Plant Standby

12 00-1 30 PM Lunch

1 30-3 00 PM Cooling Towers
Fundamentals and Theory
Function
Environmental Factors and Effects

3 00-3 15 PM Break

10

3 15- 5 00 PM	Cooling Towers Design Test Codes Test Evaluation Operation

Friday - March 21, 1997

8 30-10 00 AM	Condensers Theory Operation Construction
10 00-10 15 AM	Break
10 15-12 00 PM	Condensers Operating Factors Testing and Evaluation Problem Diagnosis Condenser Cleanliness Calculation
12 00-1 30 PM	Lunch
1 30-3 00 PM	Deaerators Theory and Operation Components Performance Calculation
3 00-3 15 PM	Break
3 15- 4 00 PM	Summary and closing

11

THE ENERGY TRAINING PROGRAM

The Energy Training Program (ETP) of the United States Agency for International Development (USAID) trains energy and environmental professionals from A I D -assisted countries (AACs) in how best to assess, utilize, and manage their energy resources ETP supports the program plans and activities of USAID's Center for Environment, the regional Bureaus and the overseas Missions

The Institute of International Education (IIE) manages ETP ETP works with AACs' energy and environmental sectors to assess their capabilities and identify training needs In response to their needs, the program develops courses in conjunction with the U S energy and environmental industry ETP ensures that participants receive practical, skills-oriented training in every program and access to modern technologies, methodologies, and management techniques Its staff closely monitor each training program to guarantee excellence

ETP covers the full range of conventional and alternative energy options available to AACs, with an emphasis on energy efficiency, environment, renewable energy, and privatization ETP has developed a two-pronged approach to training the Management-Level Training Program (MTP) and U S -based courses The MTP provides short-term, in-country workshops for senior management and policy makers These workshops are designed to increase understanding and build support for energy and environmental issues among key decision-makers The U S -based courses provide more in-depth, practical training This integrated approach is designed to strengthen the institutional capacity to plan and implement sustainable energy projects

To further enhance the effectiveness of training, ETP has established an Alumni Network, uniting its over 4,000 graduates The Network is served by the *ETP Digest, a newsletter which provides information on individual alumni accomplishments and upcoming training opportunities*

USAID's CENTER FOR ENVIRONMENT

The U S Agency for International Development (USAID) allocates a significant portion of its assistance efforts to the wise management of environment and natural resources USAID has further underscored the importance of environmental issues by creating the Center for Environment The Center's mandate is to provide technical and programmatic leadership and support to the Agency and its domestic and international development partners in addressing global environment and sustainable development problems

Specifically, the Center provides technical support to USAID field missions and regional bureaus, identifies and analyzes critical environmental problems and the constraints to their resolution, guides Agency strategy in specific environmental areas such s global climate change and biodiversity, helps to ensure consistent excellence in technical capabilities and Agency programs, and synthesizes and disseminates data from technical and scientific research

The Center for Environment also collaborates with a wide range of partners -- host countries, non-governmental organizations, other U S government agencies, international organizations, and other donor countries -- to solve environmental problems on local, regional and global levels

INSTITUTE OF INTERNATIONAL EDUCATION (IIE)

IIE is the largest privately-operated, international education and training agency in the United States Since 1919, IIE has promoted international understanding and furthered international development IIE currently administers over 270 programs for government and private sponsors worldwide The Energy Training Program, under which this course on Combined Cycle Principles falls, is sponsored by the Office of Energy, Environment and Technology of the United States Agency for International Development (USAID)

COURSE INSTRUCTORS

Peter J Resetar

Mr Resetar is currently The International Institute of Education's (IIE's) Deputy Director of USAID's Energy Training Program and directs energy training programs in Latin America Prior to joining IIE, Mr Resetar was with the General Physics Corp There he managed all aspects of the Fossil Training Department, as well as providing consulting, and training services for utilities in the U S , Malaysia, Singapore, Egypt, Slovenia and the Ukraine

Mr Resetar previously was with the Cincinnati Gas & Electric Company (CG&E) as Manager of Technical Services where he developed a heat rate improvement program that led CG&E to become one of the top ten efficient investor owned utility generators in the U S Mr Resetar previously worked for the Dayton Power and Light Company where he held a number of positions including Assistant Station Manager at the Frank M Tait Generating Station, Project Manager of the Energy Dispatch System, Unit Manager at the J M Stuart Generating Station, and Manager of Software Development Services Mr Resetar is a licensed professional engineer and has a BS in Mechanical Engineering and a Masters in Business Administration

Salman M Sheikh

Mr Sheikh is currently Vice President of Fossil Consulting Services , Inc (FCS) a fossil utility consulting company that provides engineering, operations and maintenance support services for investor and government owned utilities as well as independent power producers and process plants He has over twenty years experience in the maintenance and operation of power plants and process plants

Prior to joining FCS, Mr Sheikh was the Director of Plant Engineering and Operations Service department for General Physics Corp where he directed power plant operations projects as well as carrying out power plant performance test and advanced level training courses for power plant engineers , operators and maintenance personnel Mr Sheikh also served as the Engineering Supervisor for the Ghazlan Power Plant for the Saudi Consolidate Electric Company and as Senior Project Engineer at the Fauji Fertilizer Company and as Maintenance Engineer at Pakistan Refinery Ltd in Pakistan Mr Sheikh has both a BS and MS in Mechanical Engineering

Combined Cycle
Principles Course
Module 1

Power Plant Thermodynamic Principles

FCS
Fossil Consulting Services, Inc.
Columbia, Maryland

15

TABLE OF CONTENTS

Section			Page
1 0	POWER PLANT THERMODYNAMIC PRINCIPLES		1
1 1	Energy		1
1 1 1	Types of Energy		1
1 1 2	Units of Energy and Work		9
1 1 3	Work and Power		10
1 1 4	Energy Conversion in a Power Plant		12
1 2	Laws of Thermodynamics		13
1 2 1	The First Law of Thermodynamics		15
1 2 2	The Second Law of Thermodynamics		20
1 2 3	T-S Diagrams		22
1 3	Water and Steam		24
1 3 1	Properties of Water		24
1 3 2	Steam Tables and the Mollier Diagram		27
1 4	Heat Transfer		35
1 4 1	Conduction		35
1 4 2	Convection		38
1 4 3	Radiation		41
1 4 4	Energy Balance and the Heat Transfer Equation		44
1 5	Combustion Theory		47
1 5 1	Principles of Combustion		47
	Oxygen		48
	Heat		49
1 5 2	Requirements for Complete Combustion		49
1 5 3	Combustion Products		52
1 5 4	Undesirable Products of Combustion		55
1 5 5	Heating Value of Fuel		56

16

1 0 POWER PLANT THERMODYNAMIC PRINCIPLES

Thermodynamics is the science that describes and defines the conversion of one form of energy into another Examples include the conversion of chemical energy into thermal energy, which occurs during the combustion process, and the transformation of thermal energy into mechanical energy, which takes place in the turbine Each step in the conversion of energy is termed a "process" and several processes constitute a thermodynamic system or cycle The thermodynamic cycle that is used in conventional power plants is used to produce work to turn a generator that make the final conversion of energy into electrical energy

The water and steam used in the conventional power plant is the working fluid of the thermodynamic cycle The working fluid conveys energy between different components and is used in each process The steam undergoes several changes in the conversion of energy

This module relates energy, work, and heat with the working fluid of a power plant The concepts presented in this module will provide a better understanding of power plant operation and efficiency

1 1 Energy

Energy is a fundamental aspect of all forms of matter and all systems One of the most important aspects of energy is expressed as a physical law, the Law of Conservation of Energy This law states that energy can be changed from one type to another, but it cannot be created or destroyed

Energy can be thought of as the ability or capacity to do work When work is done, energy is frequently changed from one type to another in accordance with the Law of Conservation of Energy

1 1 1 Types of Energy

A power plant may be thought of as an "energy conversion factory" that converts one type of energy to another type There are many different types of energy Four types of energy used in the power plant cycle are chemical energy, mechanical energy, heat energy, and electrical energy

Chemical Energy

Chemical energy is the energy locked in the molecular bonds of a chemical compound (fuel in the case of a power plant) The chemical energy is released by a chemical reaction, such as that which occurs when oxygen and heat are supplied to burn the fuel The chemical structure of the fuel is changed and the combustion products that result are at a lower energy level The difference in the chemical energy level of the fuel and the combustion products is converted to heat energy

Mechanical Energy

Mechanical energy is made up of two different components, potential energy and kinetic energy Potential energy is the energy an object has as a result of its distance from the center of the earth, or its elevation The higher the elevation of an object the more potential energy it has

Kinetic energy is the energy that a substance has as a result of its velocity The higher the velocity of a substance the more kinetic energy it has In fact, kinetic energy in a substance is proportional to the square of its velocity Thus, if one were to double the velocity of an object like a ball, its kinetic energy would increase by a factor of four

An object, such as a ball, may have both potential and kinetic energy This is true, for instance for a ball that has been thrown into the air and is 20 feet above the ground and has a velocity of 40 feet per second The sum of the potential and kinetic energy of the ball is its mechanical energy

There are changes in both potential and kinetic energy in the power plant cycle The role that potential energy plays in the overall energy conversion, however, is relatively unimportant when compared to the other types of energy used in the power plant cycle Accordingly, kinetic energy is usually the only type of energy considered in mechanical energy

Heat Energy, Temperature and Enthalpy

Heat energy is the energy in a substance that is caused by temperature and pressure Heat energy is actually made up of two different types of energy, internal energy and pressure-volume (P-v) energy

Internal energy in a substance depends upon its temperature The motion of molecules of a substance is internal energy The molecules of a substance are constantly rotating, vibrating, and moving from place to place at high velocity The amount of motion is determined by the temperature of the substance The higher its temperature, the greater the molecular motion and thus the greater its internal energy

Temperature can be expressed in many different scales In the English system, the Fahrenheit scale is defined with the freezing point for water at 32°F and the boiling point (at sea level) at 212°F Another scale important in thermodynamics that is significant with regard to internal energy is called the Rankine scale The "zero point" for the Rankine temperature scale is "absolute zero " Absolute zero is the temperature at which, in theory, all molecular motion stops (-459 67°F) The internal energy of any substance at absolute zero would be zero since internal energy is determined by molecular motion The Rankine temperature scale must be used in some areas of thermodynamics that are described later in this module Temperature can be converted from degrees Fahrenheit to degrees Rankine by adding 459 67 to the temperature in Fahrenheit Thus, for example, 1000°F is 1459 67°R

In the English system internal energy is expressed in a unit called the British Thermal Unit (BTU) The BTU is defined as the amount of heat required to change the temperature of one pound of water one degree Fahrenheit Increasing the temperature of a pound of water by 1°F, therefore, increases its internal energy by 1 BTU

Different substances have different amounts of internal energy at the same temperature For example, to increase the temperature of 1 pound of steel at 60°F by 1°F, it takes 0 118 BTU, 1 pound of petroleum, 0 5 BTU Therefore, 1 pound of water has more internal energy than 1 pound of steel or petroleum at the same temperature

The state of a substance, solid, liquid, or gas, also has considerable influence on its heat energy For instance, water at the freezing point has much more heat energy than ice at the freezing point As heat energy is added to ice and the ice changes state to water, the molecular structure of the ice becomes more random One way of considering this change is to say that the ice molecules must find room to move Similarly, steam at the boiling temperature has more heat energy than water at the same temperature The molecules of steam are in motion and freer to move than those of a liquid

Because the gas molecules are at a higher energy level and are free to separate and move, gases like air or steam are compressible This means that their volume can be greatly reduced if put under pressure Compression of a gas increases its internal energy This P-v energy can be put to work by expanding the gas Since gases are compressible and can retain P-v energy, they also have a greater enthalpy (total energy) than a solid or liquid

P-v energy in a substance depends upon its pressure and specific volume The higher the pressure of a fluid, such as steam for instance, the greater its energy A substance at a given pressure and temperature occupies a fixed volume that can be determined by the parameter-specific volume Specific volume is the volume occupied by one pound mass of a substance Specific volume in the English system is expressed in terms of cubic feet per pound mass Specific volume is also the inverse of density The product of the pressure and specific volume of a substance is a measure of the P-v energy

Pressure in the English system is measured in pounds per square inch There are two variations in pressure units The most common of these is expressed in pounds per square inch gauge (psig) Atmospheric pressure is defined as zero psig Most pressure measurements in everyday situations, including power plants, are made in psig (the pounds gauge scale)

The other variation in pressure measurement is pounds per square inch absolute (psia) The difference between psig and psia is the zero point of the scale For psia zero is a perfect vacuum Thus, atmospheric pressure (which is zero psig) is 14 69 psia To convert from psia to psig, atmospheric pressure (14 69 psia) is added to the reading in psia The absolute pressure scale is much less common than the pounds gauge scale, however it is important because it is used for most thermodynamic calculations

The amount of heat energy in a substance is usually measured as its enthalpy The enthalpy of a substance is the sum of its internal energy and its P-v energy

This is expressed by the equation

$$h = u + \frac{Pv}{778}$$

where h = enthalpy (BTU/lb)
u = internal energy (BTU/lb)
Pv = the pressure-volume energy (pressure x specific volume)
778 = conversion factor (778 ft-lb/BTU)

The specific volume expression used in calculating the P-v energy above is defined as the volume per unit mass of a substance A foot-pound (ft-lb) is the unit of work However, because both heat and work are forms of energy, a conversion factor 778 ft-lb/BTU, can be used to convert the units

Figure 1-1 illustrates the concept of heat energy Energy from the burning candle is transferred to the air in the sealed container The candle converts energy from the combustion of paraffin and air The air in the container absorbs this energy in two forms (1) the internal energy of the air in the container increases as its temperature increases, and (2) the pressure-volume energy increases because its pressure increases This example illustrates that while heat energy is thought of as two different types of energy, these two types of energy are closely related The reason that the pressure of the air in the sealed container in the example increases is due to the increase in temperature

Heat energy is difficult to use to do work Heat energy is usually converted to mechanical energy because mechanical energy can be used more easily **Figure 1-2** shows heat energy being converted to mechanical energy using steam in a piston and cylinder arrangement The steam is under pressure Pressure is produced by the steam's molecules colliding with the cylinder walls and piston The steam does work by exerting a force on the piston, which causes the piston to move As the piston moves out, the volume of the steam increases as the pressure and heat energy decrease The temperature of the steam also decreases, also causing a decrease in heat energy This process is called expansion The difference in the heat energy of the steam before and after the expansion is the energy that was converted to mechanical energy

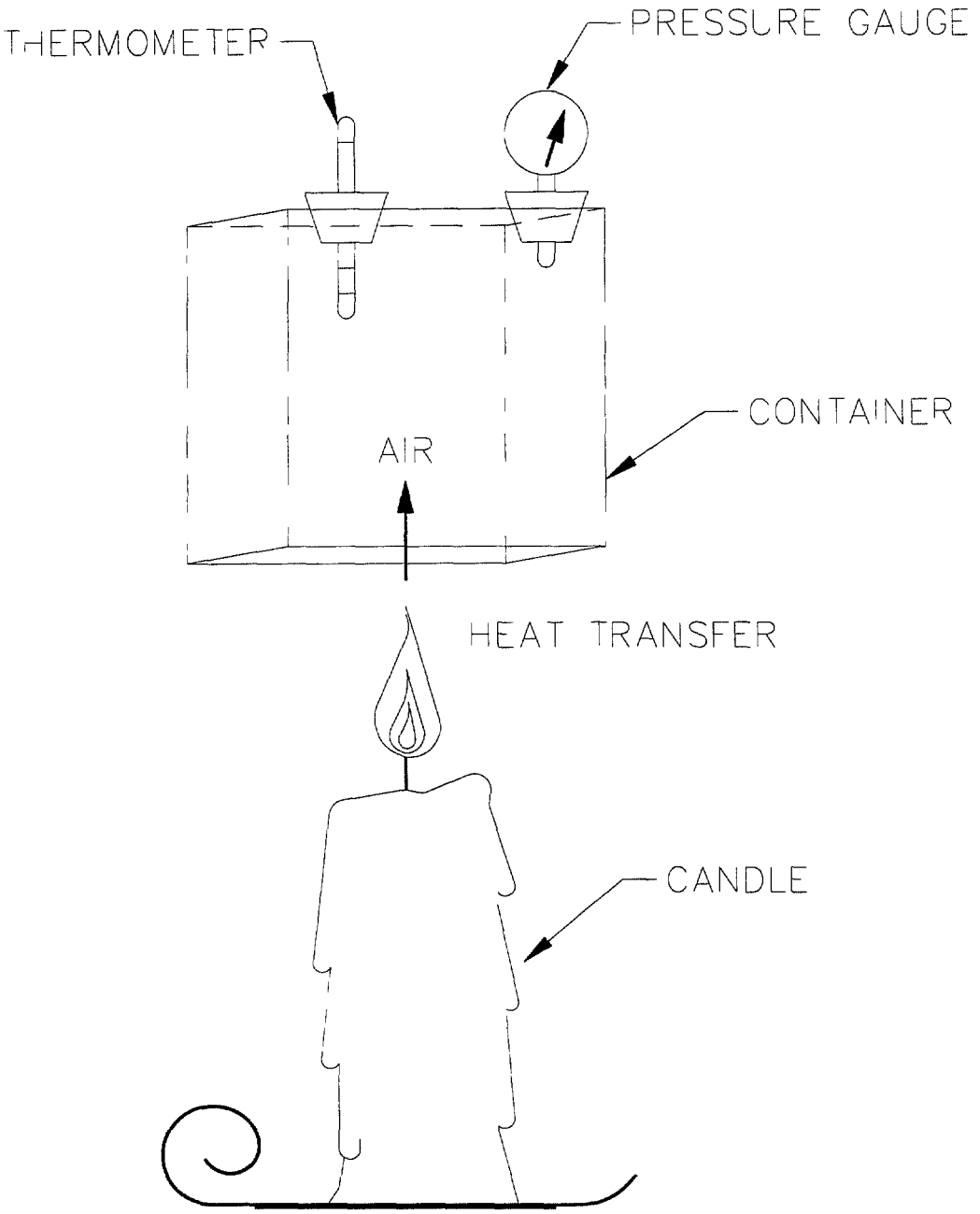

Figure 1-1 Heat Energy

22

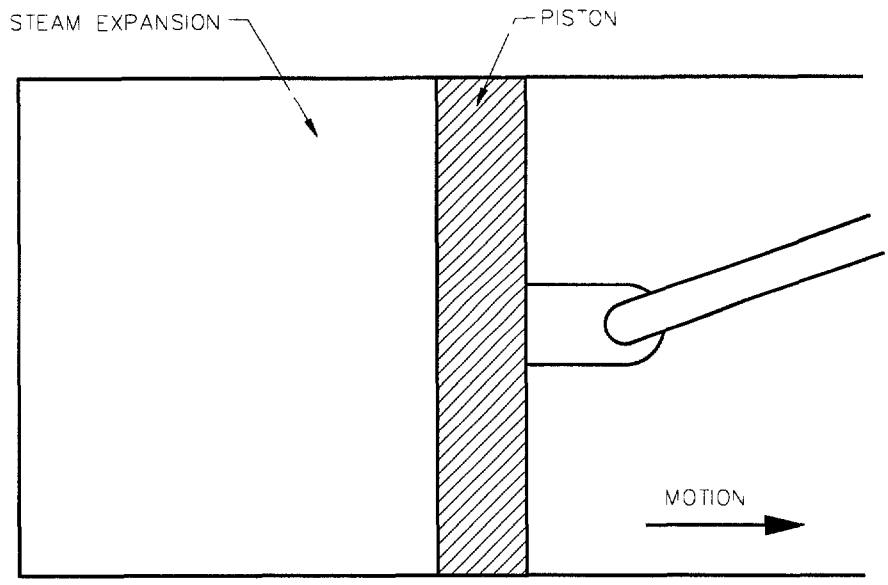

Figure 1-2 Conversion of Heat Energy to Mechanical Energy

Expansion of steam for energy conversion is used in power plant steam turbines Steam enters the turbine at high pressure (typically around 2400 psig) and is expanded to a very low pressure, nearly a vacuum The temperature of the steam also falls considerably in expansion through the turbine, typically from 1000°F to about 80°F to 100°F In the steam turbine expansion process, the heat energy in the steam is converted to mechanical energy to do the work of turning the generator rotor

Electrical Energy

Electrical energy is a result of electrons flowing through a conductor The amount of electrical energy flowing through a conductor is determined by the amount of electron flow, or current (measured in amps) and the "electrical pressure," or voltage, against which the electrons must flow

There are two types of electricity used in power plants, direct current (DC) and alternating current (AC) In DC electricity, the electrons always flow in the same direction In AC electricity, the direction of the flow of electron changes continuously, reversing itself 60 times per second for 60 HZ power

There is a relationship between the current and voltage in a conductor for DC electricity called Ohm's Law Ohm's law may be written as -

$$E = I \times R$$

Where E = voltage in volts
I = Current in amps
R = Resistance in Ohms

The greater the current for a given voltage, the greater the electrical energy flowing through an electrical conductor Similarly, the greater the voltage for a given current, the greater the electrical energy Units of electrical energy are watts Electrical power (for direct current circuits) can be determined from the following circuits using the following equation -

$$P = E \times I$$

Where P = Power in watts
E = Voltage in volts
I = Current in amps

The two equations above apply only to DC electricity Similar relationships exist for AC electricity and these are explained later in this course

Electrical energy is usually expressed in terms of watt-hours Watt-hours are the product of power and the time for which it is generated This is true for both AC and DC electricity

Electrical power can be produced using mechanical force through the use of magnetism When a magnetic field is moved near a conductor, voltage is induced in the conductor thus causing current to flow In most power plant generators the rotor is a large electromagnet It is rotated inside the stationary armature which has many conductors As the torque that is exerted on the generator rotor increases, the current flow and thus power electrical generation is increased The details of generators and how they work are covered in detail later in this course

1 1 2 Units of Energy and Work

Units are used to describe the size and magnitude of various properties of matter In the discussion of temperature earlier in this Section, for example, it was explained that the unit degree Fahrenheit can be used to express the temperature of a substance

Work, energy and properties of substances are expressed in many different units Many quantities and properties can be expressed using more than one type of unit As an example, temperature can be expressed in degrees Fahrenheit or degrees Rankine The choice of units often depends on the discipline being considered When working with electrical equipment it is convenient to use electrical units such as volts, amps and watts When working with mechanical components, it is convenient to work in mechanical units such as pounds, feet, foot-pounds, and BTUs

Since the same parameter may be expressed in different units, it is often necessary to "convert" the units through the use of conversion factors An example of a conversion factor is that used to convert temperature from degrees Fahrenheit to degrees Rankine The conversion factor 459 67 is added to degrees Fahrenheit to obtain degrees Rankine In many cases conversion factors must be used by multiplying or dividing rather than adding or subtracting Conversion factors are published in many different places

Prefixes are also commonly used with units Common examples of prefixes are "kilo," which means one thousand, and "mega" which means million A conversion factor is implied when these prefixes are used For example one kilowatt is equal to 1,000 watts The conversion factor in this instance is 1000 watts per kilowatt

It is also common to use abbreviations with units Examples of common abbreviations are "°F" for degrees Fahrenheit, "KW" for kilowatts and "BTU" for British Thermal Units Conversion tables usually provide these abbreviations as well as the conversion factors

Conversion factors are used in the following example in which the efficiency of a power plant is determined A power plant burns coal that has a heating value of 13,000 BTU/lb at a rate of 220,000 pounds per hour and produces 250,000 KW of

electricity It produces 2 86 billion BTU per hour through the conversion of chemical to heat energy The power plant also produces 250,000 KW-hours (KWH) of electrical energy per hour The efficiency of the plant is defined as the ratio of the energy supplied to the plant to the useful energy produced It is necessary to express the energy supplied and the useful energy produced in the same units in order to make this calculation Since the energy supplied and the energy produced are expressed in BTUs and the energy produced is expressed in different units, the conversion factor 3413 BTU/KWH must be used as shown in the following equation

$$Efficiency = \frac{250\ 000\ KWH \times 3413\ BTU/KWH}{2\ 860{,}000{,}000\ BTU} \times 100\% = 29\ 8\%$$

1 1 3 Work and Power

A full understanding of energy conversion in power plants requires that various concepts related to energy be understood as well Among these concepts are work, energy and entropy

Work

Energy can be defined as the capacity to do work Another way to define work is in terms of mechanical energy Work in terms of mechanical energy is the action of a force moving an object over a distance In fact, work is often considered as energy in motion since moving an object increases its kinetic energy Work can also be thought of as a way to convert one type of energy to another The turbine, for example does work on the generator by exerting a force (torque) on the generator as it moves (rotates) The generator then converts the mechanical energy from this work to electrical energy

Figure 1-3 illustrates a small steam turbine that being used to lift a weight The steam turbine converts the heat energy of the steam into mechanical energy to lift the weight The weight has more potential energy after it has been lifted to a higher elevation through the work of the turbine The turbine has converted heat energy to potential energy by working

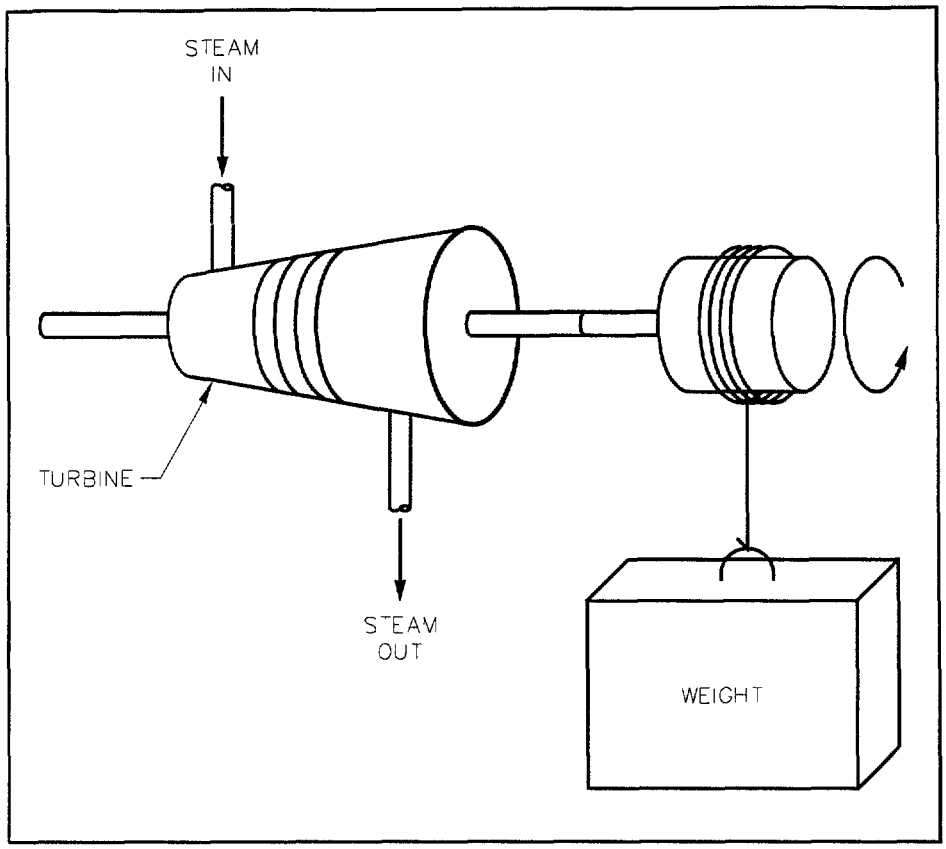

Figure 1-3 Weight Lifted by Small Steam Turbine

Another example of work involved in conversion of energy occurs in a pump A prime mover, such as a motor or a turbine, transforms energy (electrical or heat) to mechanical energy to rotate the pump The pump uses this mechanical energy to do work on the fluid, increasing the energy of the fluid The result of the increase in the fluid's energy is generally seen as an increase in the pressure of the fluid There may be other changes in energy as well, such as an increase in the velocity of the fluid or an increase in its temperature The increase in velocity results in an increase the kinetic energy of the fluid, whereas, the increase in temperature results in an increase in the internal energy of the fluid Typically, this temperature increase is very small

Power

It is useful to know how much energy is necessary to make a process occur The amount of energy alone is not enough to describe many processes, however The rate at which the energy is delivered to or generated from a process is also important Power is the rate at which work is done For example, in **Figure 1-3**, if the weight is lifted at a speed that is twice the original speed, then twice as much power is being used Regardless of the rate, however, the same amount of work is performed and the same amount of energy is used if the weight is lifted the same distance

1 1 4 Energy Conversion in a Power Plant

A power plant receives fuel and burns it to convert the chemical energy of the fuel into heat energy In a gas turbine, this energy is converted directly to mechanical energy as the hot gases expand to drive the turbine Some of the mechanical energy of the turbine is transferred through the shaft to the compressor to increase the pressure and temperature of the air used in the gas turbine The rest of the mechanical energy is transmitted through the shaft to the generator where it is converted to electrical energy

In a combined cycle plant, hot gases from the gas turbine are exhausted to a heat recovery steam generator (HRSG) where additional energy conversion takes place The heat energy of the gases is transferred to the water in the HRSG, steam is formed and then superheated The heat transfer takes place in the tubes inside the HRSG The internal energy of the steam is increased through the absorption of heat The pressure increases because the volume of the gaseous steam is limited

The heat energy in the steam from the HRSG is converted to mechanical energy in the steam turbine The turbine uses the mechanical energy from the steam to turn the generator which then converts the mechanical energy to electrical energy

The steam expands and cools in the energy conversion in the steam turbine A small fraction of the steam condenses in the steam turbine and appears as small water droplets The mixture of steam and water exhausts from the steam turbine to the condenser where the remaining steam is condensed into water, usually referred to as condensate The heat required to change state between steam and water, called the

heat of vaporization, is rejected to the circulating water through heat transfer in the condenser The condensate is then pumped back to the HRSG through heat exchangers designed to capture more heat through heat transfer The process is then repeated

1 2 Laws of Thermodynamics

The conversion of heat to work is based on two fundamental principles generally referred to as the First and Second Laws of Thermodynamics The First Law is simply a restatement of the Law of Conservation of Energy that describes the relationship between heat and work The Second Law describes the availability of heat energy to do work

Regardless of the type of work or the type of energy under consideration, the terms heat, work, and energy have practical significance when viewed in terms of systems, processes, cycles and their surroundings In the case of expansion work in a steam turbine, the system is a fluid (water/steam) capable of expansion or contraction as a result of pressure, temperature or chemical changes The way in which these changes take place is referred to as the process A cycle is a sequence of processes that produces net heat flow or work when placed between an energy source (fuel) and an energy sink (condenser)

When dealing with energy and the means of converting energy from one form to another, it is convenient to draw a boundary around the system Everything within the system boundaries is part of the system, and everything outside of the boundaries is called the surroundings Energy can be transferred across the system boundaries between a system and its surroundings

There are two types of systems closed systems and open systems A closed system, as shown in **Figure 1-4**, has no transfer of mass to or from its surroundings For example, the feedwater/steam piping in a power plant is the boundary of a closed system It is used to collect water (mass) and isolate it from the surroundings Energy is transferred into the system in the HRSG and out of the system in the turbine and condenser The mass of the working fluid in the system (steam/water) stores the energy

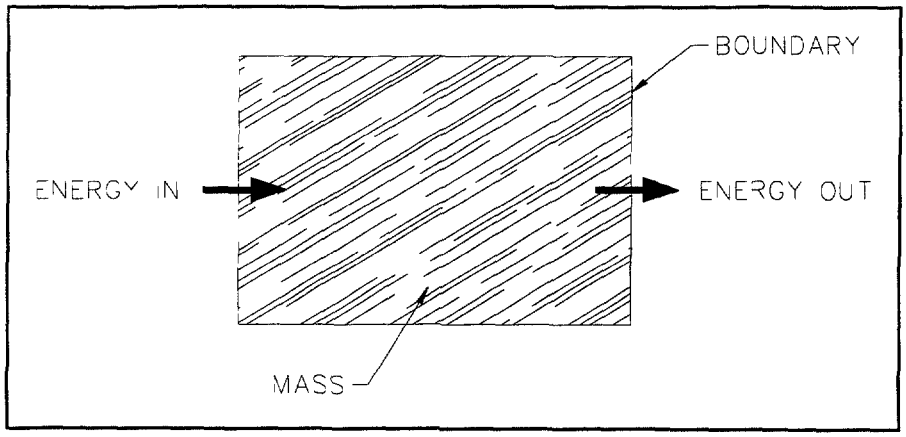

Figure 1-4 Closed System

An open system, as shown in **Figure 1-5**, transfers both mass and energy to or from its surroundings An example of an open system is a hydroelectric power plant which utilizes a continuous flow of water into and out of the system to produce electrical power

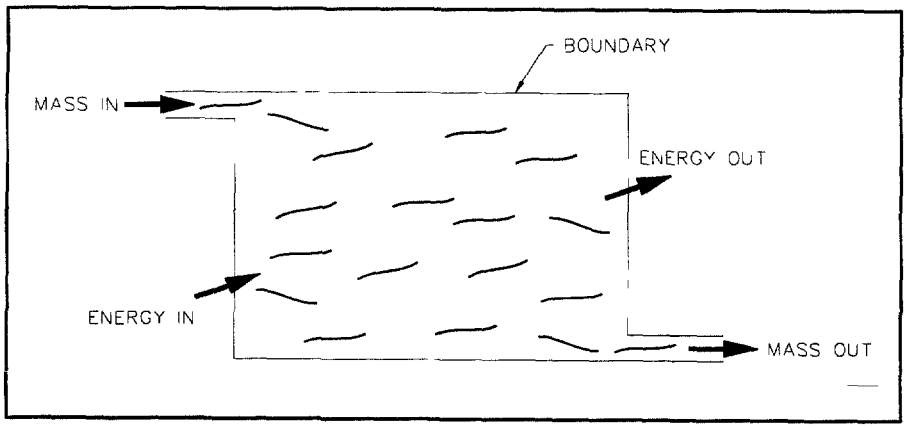

Figure 1-5 Open System

The conventional power plant steam/water cycle (often called the Rankine cycle) is a closed system used to convert the heat of combustion into mechanical work The mass of the system is water, and the system boundary consists of the boiler tubes, turbine casing, condenser tubes, pump casings, and the interconnecting piping

1 2 1 The First Law of Thermodynamics

From the principle of conservation of energy, whenever there is any net transfer of energy inward across the boundary of a system, the stored energy of the system increases by an amount equal to the net energy transferred Conversely, if there is a net transfer of energy out of the system during any process, the stored energy of the system decreases by an amount equal to the net energy removed This principle relates to the First Law of Thermodynamics which states that energy can neither be created nor destroyed

In the case of a closed system, the first law of thermodynamics can be applied by using an energy balance, as shown in **Figure 1-6** From this energy balance the following equation can be written

$$Q - W = E_2 - E_1$$

where Q = net heat transferred to the system
W = net work done by the system
E_1 = stored energy of the system at the start of a process
E_2 = stored energy of the system at the end of the process

This equation states that the difference between the net heat energy added to a closed system and the net work done by the system is seen as a change in the amount of energy stored in the system This general "energy" equation is one form of the First Law of Thermodynamics Application of this equation to a system is called writing the energy balance for the system

An energy balance is written by evaluating the three terms of the general energy equation These include the heat *Q* and work *W* added to or removed from the system, as well as change in total energy possessed by the system The energy in the system includes potential energy, kinetic energy, internal energy and P-v energy

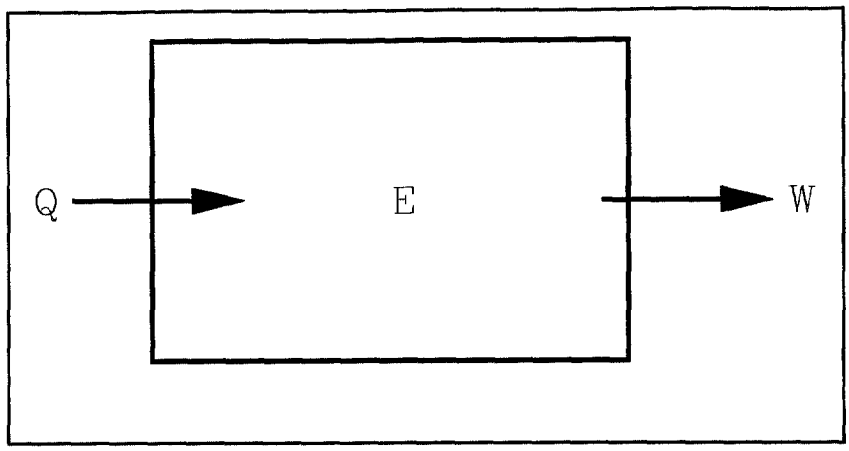

Figure 1-6 Energy Balance

The changes in potential and kinetic energy in most closed systems are very small compared to other changes and so to simplify the equation, they are assumed to be zero Thus, the change in the total energy equals the sum of the changes in internal energy and pressure-volume (P-v) energy, which equals the change in enthalpy This can be represented by the following equation

$$Q - W = H_2 - H_1 = \Delta H$$

where Q = net heat transferred to the system
W = net work done by the system
H_1 = enthalpy of the system at the start of a process
H_2 = enthalpy of the system at the end of the process

It is important in using this equation that the energy units used are the same It is also important to adopt "sign conventions" for heat and work are used in applying these relationships Usually the following sign convention is used If heat is added to the system, a positive value (plus sign) is used for *Q*, if heat is removed from the system, a negative value (minus sign) is used If work is done by the system, a positive value is used for *W*, if work is done on the system, a negative value is used

The general energy equation also applies to open systems, as shown in **Figure 1-7** The type of open system most frequently encountered in practical systems is called a steady flow system

32

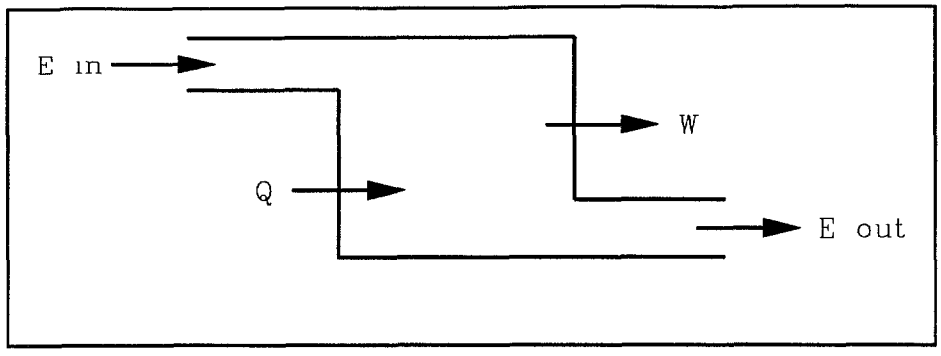

Figure 1-7 General Energy Equation in Open Systems

In this case, the mass flow into the system equals the mass flow out Thus, no mass is collected by the system In addition, the potential and kinetic energy changes of the working fluid can be eliminated since they are essentially the same at the inlet and outlet conditions Thus, the change in the total energy equals the sum of the changes in internal energy and P-v energy entering and leaving the system This equals the change in enthalpy of the working fluid

The general energy equation can be rewritten as follows

$$Q + H_i = W + H_o$$

where Q = net heat transferred to the system
W = net work done by the system
H_i = enthalpy of the working fluid entering the system
H_o = enthalpy of the working fluid leaving the system

This equation can be applied to the entire power plant without examining the details of the process within the plant The equation can also be applied to individual components and processes in the power plant such as the HRSG, steam and gas turbines, boiler feed pumps and so on

33

For example, a turbine is designed to extract energy from the working fluid to do work in the form of turning a shaft This shaft work is converted to electrical energy by the generator **Figure 1-8** shows a simplified diagram of a turbine A simple turbine is a steady flow system in which, ideally, no heat is transferred to or from the system ($Q = 0$) The general equation for a simple turbine is written as follows

$$H_i = W + H_o$$

Because the turbine in this example is a steady flow system, the energy equation must be written for some selected time interval This is accomplished by writing the equation in terms of rates of energy transfer, in BTU per unit time, as follows

$$W_t = m(h_i - h_o)$$

This form of the general energy equation is particularly important because the rate of work done by the system $\dot{W}$ is the power output of the system The other terms in this form of the equation, namely the mass flow rate m and the enthalpies, h_i and h_o, are measured quantities The lower case "h" is used rather than the upper case "H" as in the previous equation because the specific enthalpy, BTU per pound, is used rather than the "gross" enthalpy

Another example of a heat transfer system is a boiler (or HRSG) of a power plant which is used to take high pressure, low temperature water and generate high pressure, high temperature steam **Figure 1-9** shows a simple boiler as an open system This system consists of the water flowing through the boiler, the piping and boiler tubes make up the system boundaries Applying the general energy equation to the boiler, the following equation can be written

$$Q + H_i = W + H_o$$

Q is the amount of heat transferred through the boiler tubes and absorbed by the water and steam Since the boiler does not do work, the work term W in the equation is zero

Thus, the equation can be simplified and written for a steady flow system

$$Q = m(h_o - h_i)$$

where $\dot{Q}$ is the rate of heat transferred to the working fluid

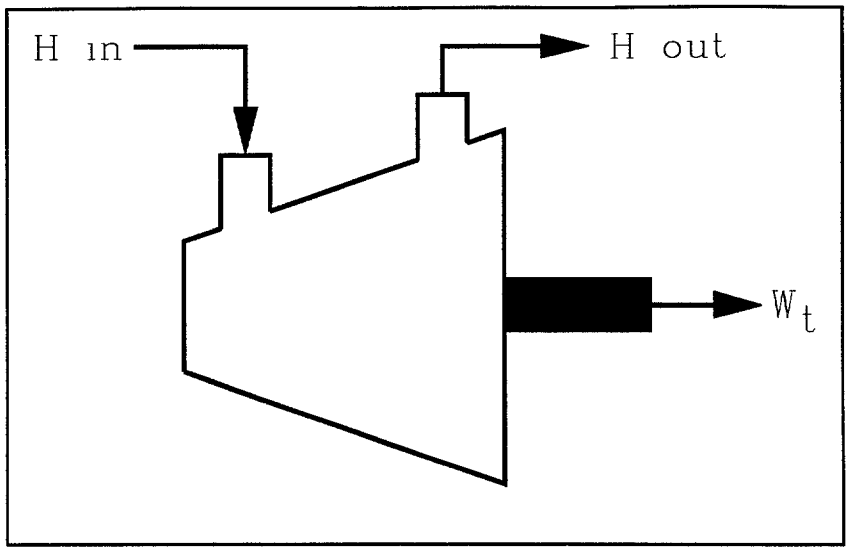

Figure 1-8 Simplified Turbine Diagram

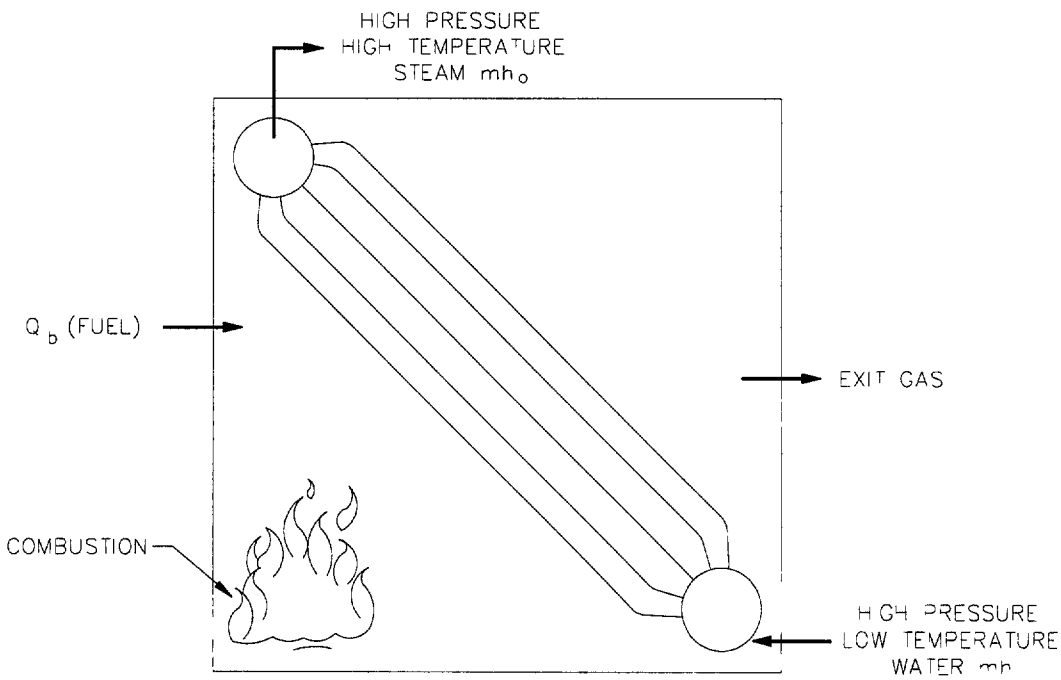

Figure 1-9 Simple Boiler

35

1 2 2 The Second Law of Thermodynamics

The First Law of Thermodynamics describes the relationship between heat, energy and work While the First Law is useful in describing, for example, how much heat is required to produce a given amount of work, it is not sufficient by itself to describe all aspects of conversion of energy

For example, consider a rotating flywheel which is brought to rest by friction in its bearing The temperature of the bearing rises The increase in the internal energy is equal to the original energy of the rotating flywheel Can the flywheel start rotating as the bearing cools down until the bearing temperature is restored to its original value and the flywheel once again has its original kinetic energy? There is nothing in the First Law that helps to answer this question, none the less, the answer is no It is evident that there must be some natural principle, in addition to the First Law of Thermodynamics, which determines the direction of a process This is where the Second Law of Thermodynamics applies

The First Law is a statement of the equivalence of various forms of energy and says that energy must be conserved in a process, however, it gives no indication of whether or not difficulties will be encountered in making the conversion from one energy form to another The Second Law of Thermodynamics is not restricted to interchanges of heat and work, but rather is a broad philosophy on the behavior of energy and energy transformations The Second Law concentrates on the feasibility of energy conversion processes

Consider a power plant cycle as shown in **Figure 1-10** which consists of the boiler, turbine, condenser, and feedwater systems Heat is added to this cycle in the boiler Energy leaves the system in the form of work done by the turbine However, not all of the energy is removed from the steam in the turbine, and the steam that enters the condenser must be condensed In order to condense the steam in the condenser, the latent heat of vaporization of the steam must be rejected from the system If this heat were not rejected, the condenser pressure and temperature would begin to increase lowering the work output of the turbine This rejected heat is more than half of the total heat added to the cycle in the steam generator

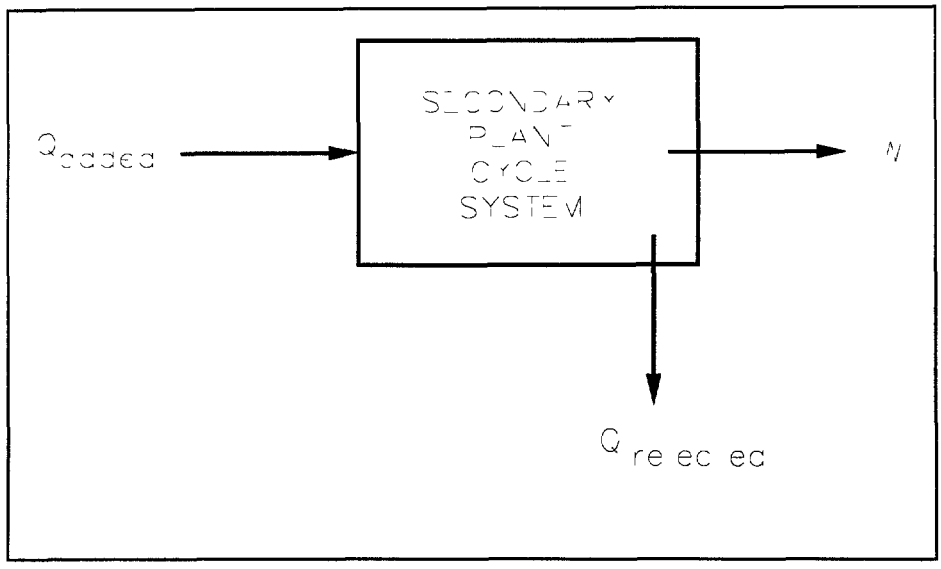

Figure 1-10 Power Plant Cycle

This cycle appears to be very inefficient It would seem that the cycle could be made more efficient by using the heat rejected in the condenser rather than "throwing it away " Unfortunately, the heat rejected from the condenser is at a relatively low temperature, typically around 100°F Most thermodynamic processes used in power generation, such as generating steam in the HRSG, require much higher temperatures In fact, apart from using warm circulating water from the condenser for heating greenhouses and melting snow from sidewalks, there are very few ways in which it is practical to use the heat rejected in the condenser In thermodynamics, the heat rejected from the condenser is said to have low availability

The example of the power plant cycle in **Figure 1-10** illustrates a fundamental consequence of the Second Law of Thermodynamics It is impossible to convert all of the energy supplied to a thermodynamic system to useful work Some of the energy is lost or rejected The more energy that can be converted to useful work, the more efficient the system In thermodynamics, the opposite view is often taken, a thermodynamic cycle can be made more efficient by minimizing the heat rejected

The example of the power plant cycle in **Figure 1-10** also demonstrates that, when dealing with energy conversion, it is not enough to know the amount of heat transferred to describe a thermodynamic process The temperature at which heat is

transferred is also important because the availability if heat energy in a substance depends upon its temperature The lower the temperature of a substance, the less the availability of its heat energy to do work This concept is so important that another property is defined to describe both the amount of heat transferred and the temperature at which it is transferred

This property, entropy, represented by S is defined as the ratio of heat transferred to the absolute temperature at which it is transferred This can be written in the following equation

$$\Delta S = \frac{\Delta Q}{T_{abs}}$$

where ΔS = change in entropy of a system during some process (BTU/°R)
ΔQ = amount of heat added to the system during the process (BTU)
T_{abs} = absolute temperature at which the heat was added (°R)

Entropy is a property as is pressure, temperature, volume or enthalpy Because entropy tells so much about the usefulness of an amount of heat transferred in performing work, the steam tables include values of specific entropy as part of the information tabulated

1 2 3 T-S Diagrams

The definition of the change in entropy can be visualized by considering a process in which heat is added to a substance If this process is carried out at a constant temperature, the change in entropy(ΔS) equals the heat added(Q) divided by the absolute temperature (T_{abs})

The usefulness of entropy can be illustrated by describing thermodynamic processes on a diagram called a T-S diagram and using the definition of entropy The following equation can be written by rearranging the equation that defines entropy

$$\Delta Q = T_{abs} \Delta S$$

where ΔS = change in entropy of a system during some process (BTU/°R)
ΔQ = amount of heat added to the system during the process (BTU)
T_{abs} = absolute temperature at which the heat was added (°R)

T_{abs} = absolute temperature at which the heat was added (°R)

The amount of heat required for a thermodynamic process can be thought of as the area under a curve plotted on a T-S diagram That area can be determined through a mathematical process called integration **Figure 1-11** shows a T-S diagram for two different thermodynamic processes in which the temperature *T* and the entropy *S* of a substance both change as heat is added

The heat required for the process represented by path A can be found by determining the area under the curve A between the limits of S_1 and S_2 The second thermodynamic process, represented by path B has the same endpoints but is different from path A, because all of the points on curve B are lower than those on curve A Accordingly, the area under curve B is less than that under curve A and so the heat required for the process represented by curve B is less than that for the process represented by curve A Thus, as this example demonstrates, it is not enough to know the endpoints of a process in order to determine the amount of heat required for that process, the path must also be known

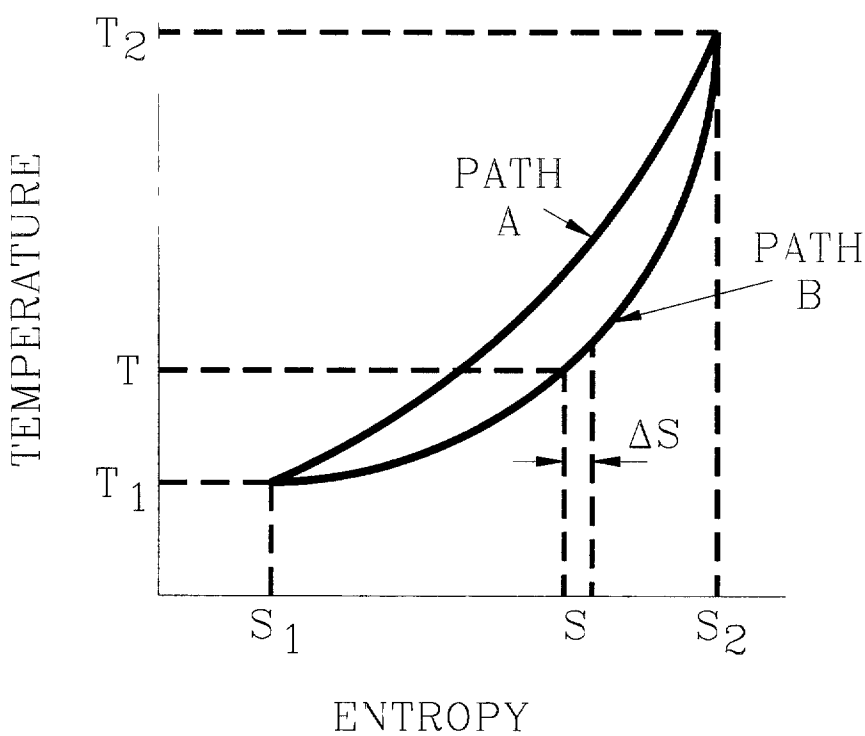

Figure 1-11 T-S Diagram

39

The work done by or on a thermodynamic system and the heat added to or removed from the system can be easily visualized on the T-S diagram T-S diagrams are, therefore, frequently used to analyze energy transfer cycles In the following Module, two cycles that are used in power plants, the Brayton and Rankine Cycles, are depicted on a T-S diagram to determine efficiency The Brayton and Rankine Cycles thermodynamically represent the gas turbine and water/steam cycle of a combined cycle power plant

1 3 Water and Steam

Water is the primary substance used to transfer energy in a power plant In a combined cycle plant, the heat recovery steam generator (HRSG) is used to convert water into steam The steam is used to drive the steam turbine-generator which produces electrical power Water is a key resource because of its wide availability, nontoxic nature, and favorable properties The properties discussed in this section are

- States or phases
- Heat capacity (specific heat)
- Heat of fusion
- Heat of vaporization
- Saturation temperature
- Saturation pressure
- Superheat

1 3 1 Properties of Water

Water can exist in any of the three states solid, liquid, and gas These three states are also called phases The state or phase of water depends on its temperature and pressure At atmospheric pressure, water below 32°F is solid (ice), water above 32°F and below 212°F is liquid, and water above 212°F is gaseous (steam) Heat must be transferred to or from water to change both its temperature and state **Figure 1-12** shows the amount of heat at atmospheric pressure needed to change 0°F ice to 212°F steam and beyond

When heat is transferred to ice, its temperature increases until the ice reaches the freezing point of 32°F The amount of heat required to change the temperature of ice is determined by a parameter called specific heat

The specific heat of ice is 0 505 BTU/lb°F and so one pound of ice must absorb 0 505 BTU of heat to raise its temperature by 1°F In **Figure 1-12**, 0°F ice is heated to 32°F by adding approximately 16 BTU of energy

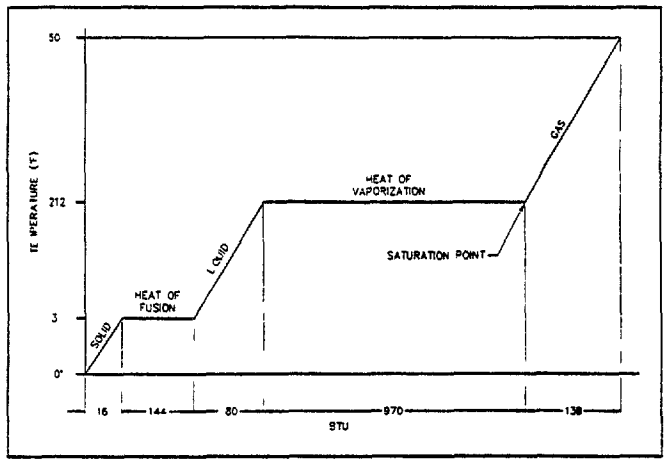

Figure 1-12 Water Phase Diagram

When more heat is added beyond this point, however, the temperature of the ice does not change Additional heat energy instead melts the ice The process of melting ice to water is called a phase transformation or change of state The heat required for the change of state from ice to water is called the heat of fusion or latent heat The heat of fusion is the difference in internal energy of ice and water The amount of heat needed to change 1 pound of ice at 32°F to water at 32°F is 144 BTU

Once all of the ice changes state to water, as more heat is added, the temperature of the water increases The increase in temperature occurs at a rate of about 1°F rise for each BTU added, since the specific heat of water is about 1 BTU/lb-°F In fact, the specific heat of water changes slightly as its temperature changes The specific heat is exactly 1 BTU/lb-°F when the temperature of the water is at 60°F To increase the temperature of 1 pound of water from 32° to 212°F, 180 BTU of heat are required This heat addition is called sensible heat, since the heat addition can be "sensed" as a temperature change

At 212°F, another phase transformation begins If more heat is added, the water starts to boil Boiling is the change of state from water to steam The temperature at which water boils, for a given pressure, is called the saturation temperature Water at the saturation temperature is called saturated liquid, and steam at the saturation temperature is called saturated steam At saturation temperature, water as a liquid and a gas exist together The heat required for the change of state

At 212°F, another phase transformation begins If more heat is added, the water starts to boil Boiling is the change of state from water to steam The temperature at which water boils, for a given pressure, is called the saturation temperature Water at the saturation temperature is called saturated liquid, and steam at the saturation temperature is called saturated steam At saturation temperature, water as a liquid and a gas exist together The heat required for the change of state from water to steam is called the heat of vaporization The heat of vaporization is the difference in internal energy of water and steam The amount of heat needed to change 1 pound of water at 212°F to steam at 212°F is 970 3 BTU

The saturation temperature (boiling point) of water depends on its pressure At atmospheric pressure, the saturation temperature is 212°F The saturation temperature of water decreases as its pressure decreases and increases as its pressure increases For example, if the pressure is lowered to 1 psia (compared to atmospheric pressure of 14 69 psia) the saturation temperature of water is 101 7°F If the pressure is increased to 100 psia, the saturation temperature of water is 327 8°F

There is a unique relationship between pressure and temperature of water at saturation conditions That is, for any given saturation pressure, there is one and only one saturation temperature Thus, at saturation if the pressure is known, the temperature is also known and vice versa

Once all of the water changes state to steam, further addition of heat to the steam increases its temperature above the saturation temperature Steam that is above saturation temperature is called superheated steam The specific heat of steam is 0 490 BTU/lb-°F at saturation at atmospheric pressure and so 0 490 BTU is needed for each degree of superheat for 1 pound of steam The specific heat of steam changes as its pressure and temperature change

The difference in the temperature of superheated steam and the saturation temperature for its pressure is called the superheat or degrees of superheat of the steam For example, steam at atmospheric pressure that has been heated to 222°F has 10 degrees of superheat

As water boils and changes to steam, a mixture of steam and water at the same temperature exists A new parameter, steam quality (often referred to simply as quality), is necessary to describe the mixture of steam and water Steam quality is

defined as the mass percentage of steam present in the steam-water mixture at saturated conditions If, for example, 90% of the water in a mixture of steam and water were steam, the quality of this mixture would be 90% Quality is only useful at saturation This is because water that is below the saturation pressure (and thus has no steam) has zero quality and superheated steam has a quality of 100%

1 3 2 Steam Tables and the Mollier Diagram

The properties of water have been studied more than those of any other substance The properties of water that are most useful in thermodynamics of power plants are specific volume, enthalpy and entropy Tables have been developed listing the changes of each property with changes in pressure and temperature The two tables most used in power plant work are the saturated steam tables and superheated steam tables The saturated steam tables provide the values of properties of steam and water at saturation conditions while the superheated steam tables provide the values of properties of steam above saturation temperature Some steam tables also provide the values of properties of water below saturation temperature (called sub-cooled water) All of these tables of properties are, together, referred to as steam tables These tables are commonly published as a book

The saturated steam tables give the values of properties of saturated water and saturated steam for temperatures from 32°F to 705 47°F and for the corresponding pressures from 0 08865 to 3208 2 psia Water below 32°F and 0 08865 psia is ice rather than saturated steam or water Water at 705 47°F and 3208 2 psia is at the critical point At the critical point there is no difference in the density or other properties of water and steam and thus saturation no longer has meaning

Normally, two sets of saturated steam tables are provided, temperature tables and pressure tables Temperature tables list values of properties according to saturation temperature in even increments of temperature Pressure tables list values of properties according to saturation pressure in even increments of pressure Both the temperature and pressure tables have the same information, however the information is organized differently for convenience The temperature tables are easiest to use when the temperature is known, and the pressure tables are easiest to use when the pressure is known Table 1-1 shows a portion of a saturated steam temperature table Table 1-2 shows a portion of a saturated steam pressure table

Temp	Press	Volume ft³/lbm			Enthalpy Btu/lbm			Entropy Btu/Lbm x R			Temp
F	psia	Water	Evap	Steam	Water	Evap	Steam	Water	Evap	Steam	F
		v_f	v_{fg}	v_g	h_f	h_{fg}	h_g	s_f	s_{fg}	s_g	
560 0	1133 38	0 02207	0 36507	0 38714	562 4	625 3	1187 7	0 7625	0 6132	1 3757	560 0
558 0	1115 36	0 02201	0 37230	0 39431	559 8	628 6	1188 4	0 7600	0 6177	1 3777	558 0
556 0	1097 55	0 02194	0 37966	0 40160	557 2	632 0	1189 2	0 7575	0 6222	1 3797	556 0
554 0	1079 96	0 02188	0 38715	0 40903	554 6	635 3	1189 9	0 7550	0 6267	1 3817	554 0
552 0	1062 59	0 02182	0 39479	0 41660	552 0	638 5	1190 6	0 7525	0 6311	1 3837	552 0
550 0	1045 43	0 02176	0 40256	0 42432	549 5	641 8	1191 2	0 7501	0 6356	1 3856	550 0
548 0	1028 49	0 02169	0 41048	0 43217	546 9	645 0	1191 9	0 7476	0 6400	1 3876	548 0
546 0	1011 75	0 02163	0 41855	0 44018	544 4	648 1	1192 5	0 7451	0 6445	1 3896	546 0
544 0	995 22	0 02157	0 42677	0 44834	541 8	651 3	1193 1	0 7427	0 6489	1 3915	544 0
542 0	978 90	0 02151	0 43514	0 45665	539 3	654 4	1193 7	0 7402	0 6533	1 3935	542 0
540 0	962 79	0 02146	0 44367	0 46513	536 8	657 5	1194 3	0 7378	0 6577	1 3954	540 0
538 0	946 88	0 02140	0 45237	0 47377	534 2	660 6	1194 8	0 7353	0 6621	1 3974	538 0
536 0	931 17	0 02134	0 46123	0 48275	531 7	663 6	1195 4	0 7329	0 6665	1 3993	536 0
534 0	915 66	0 02129	0 47026	0 49155	529 2	666 6	1195 9	0 7304	0 6708	1 4012	534 0
532 0	900 34	0 02123	0 47947	0 50070	526 8	669 6	1196 4	0 7280	0 6752	1 4032	532 0

Table 1 1 Saturated Steam Temperature Table

Press	Temp	Volume ft³/lbm			Enthalpy Btu/lbm			Entropy Btu/Lbm x R			Energy Btu/Lbm	
psia	F	Water	Evap	Steam	Water	Evap	Steam	Water	Evap	Steam	Water	Steam
		v_f	v_{fg}	v_g	h_f	h_{fg}	h_g	s_f	s_{fg}	s_g	u_f	u_g
1200 0	587 19	0 02232	0 34013	0 36245	571 9	613 0	1184 0	0 7714	0 5969	1 3683	566 9	1104 3
1190 0	586 13	0 02228	0 34371	0 36599	570 5	614 8	1185 3	0 7701	0 5993	1 3694	565 5	1104 7
1180 0	585 06	0 02224	0 34734	0 36958	569 0	616 6	1185 7	0 7688	0 6017	1 3705	564 2	1105 0
1170 0	583 99	0 02221	0 35103	0 37324	567 6	618 5	1186 1	0 7674	0 6042	1 3714	562 8	1105 3
1160 0	582 91	0 02217	0 35478	0 37695	566 2	620 3	1186 6	0 7661	0 6066	1 3727	561 4	1105 6
1150 0	581 82	0 02214	0 35859	0 38073	564 8	622 2	1187 0	0 7647	0 6091	1 3738	560 1	1106 0
1140 0	580 73	0 02210	0 36247	0 38457	563 3	624 1	1187 4	0 7634	0 6115	1 3749	558 7	1106 3
1130 0	579 63	0 02206	0 36641	0 38847	561 9	625 9	1187 8	0 7620	0 6140	1 3760	557 3	1106 6
1120 0	578 52	0 02203	0 37041	0 39244	560 5	627 8	1188 2	0 7606	0 6165	1 3771	555 9	1106 9
1110 0	577 40	0 02199	0 37449	0 39648	559 0	629 6	1188 7	0 7592	0 6190	1 3783	554 5	1107 2
1100 0	576 28	0 02195	0 37863	0 40058	557 5	631 5	1189 1	0 7578	0 6216	1 3794	553 1	1107 5
1090 0	575 14	0 02192	0 38285	0 40476	556 1	633 4	1189 5	0 7564	0 6241	1 3805	551 7	1107 8
1080 0	574 00	0 02188	0 38714	0 40902	554 6	635 3	1189 9	0 7550	0 6266	1 3817	550 2	1108 1
1070 0	572 86	0 02184	0 39150	0 41335	553 1	637 1	1190 3	0 7536	0 6292	1 3828	548 8	1108 4
1060 0	571 70	0 02181	0 39594	0 41775	551 6	639 0	1190 7	0 7522	0 6318	1 3840	547 4	1108 7
1050 0	570 53	0 02177	0 40047	0 42224	550 1	640 9	1191 0	0 7507	0 6344	1 3851	545 9	1109 0
1040 0	569 36	0 02174	0 40507	0 42681	548 6	642 8	1191 4	0 7493	0 6370	1 3863	544 5	1109 3
1030 0	568 18	0 02170	0 40967	0 43146	547 1	644 7	1191 8	0 7478	0 6396	1 3874	543 0	1109 6
1020 0	566 99	0 02166	0 41454	0 43620	545 6	646 6	1192 2	0 7463	0 6423	1 3886	541 5	1109 9
1010 0	565 79	0 02163	0 41941	0 44103	544 1	648 5	1192 6	0 7449	0 6449	1 3898	540 0	1110 1
1000 0	564 58	0 02159	0 42436	0 44596	542 6	650 4	1192 9	0 7434	0 6476	1 3910	538 6	1110 4
990 0	563 36	0 02155	0 42942	0 45097	541 0	652 3	1193 3	0 7419	0 6503	1 3922	537 1	1110 7
980 0	562 14	0 02152	0 43457	0 45609	539 5	654 2	1193 7	0 7404	0 6530	1 3934	535 6	1111 0
970 0	560 90	0 02148	0 43982	0 46130	537 9	656 1	1194 0	0 7389	0 6557	1 3946	534 0	1111 2
960 0	559 65	0 02145	0 44518	0 46662	536 3	658 0	1194 4	0 7373	0 6584	1 3958	532 5	1111 5
950 0	558 39	0 02141	0 45064	0 47205	534 7	660 0	1194 7	0 7358	0 6612	1 3970	531 0	1111 7
940 0	557 13	0 02137	0 45621	0 47759	533 2	661 9	1195 1	0 7342	0 6640	1 3982	529 4	1112 0
930 0	555 85	0 02134	0 46190	0 48324	531 6	663 8	1195 4	0 7327	0 6668	1 3995	527 9	1112 2
920 0	554 56	0 02130	0 46770	0 48901	530 0	665 8	1195 7	0 7311	0 6696	1 4007	526 3	1112 5
910 0	553 26	0 02127	0 47363	0 49490	528 3	667 7	1196 1	0 7295	0 6724	1 4019	524 8	1112 7
900 0	551 95	0 02123	0 47968	0 50091	526 7	669 7	1196 4	0 7279	0 6753	1 4032	523 2	1113 0
890 0	530 63	0 02119	0 48586	0 50706	525 1	671 6	1196 7	0 7263	0 6782	1 4045	521 6	1113 2
880 0	529 30	0 02116	0 49218	0 51333	523 4	673 6	1197 0	0 7247	0 6811	1 4057	520 0	1113 4
870 0	527 96	0 02112	0 49863	0 51975	521 8	675 6	1197 3	0 7230	0 6840	1 4070	518 4	1113 7
860 0	526 60	0 02109	0 50522	0 52631	520 1	677 6	1197 7	0 7214	0 6869	1 4083	516 7	1113 9
850 0	525 24	0 02105	0 51197	0 53302	518 4	679 5	1198 0	0 7197	0 6899	1 4094	515 1	1114 1
840 0	523 86	0 02101	0 51886	0 53988	516 7	681 5	1198 2	0 7180	0 6929	1 4109	513 4	1114 3
830 0	522 46	0 02098	0 52592	0 54689	515 0	683 5	1198 5	0 7163	0 6959	1 4122	511 8	1114 5
820 0	521 06	0 02094	0 53314	0 55408	513 3	685 5	1198 8	0 7146	0 6990	1 4136	510 1	1114 8
810 0	519 64	0 02091	0 54052	0 56143	511 6	687 6	1199 1	0 7129	0 7020	1 4149	508 4	1115 0
800 0	518 21	0 02087	0 54809	0 56896	509 8	689 6	1199 4	0 7111	0 7051	1 4163	506 7	1115 2
790 0	516 76	0 02083	0 55584	0 57667	508 1	691 6	1199 7	0 7094	0 7082	1 4176	505 0	1115 4
780 0	515 30	0 02080	0 56377	0 58457	506 3	693 6	1199 9	0 7076	0 7114	1 4190	503 3	1115 5
770 0	513 34	0 02076	0 57191	0 59267	504 5	695 7	1200 2	0 7058	0 7146	1 4204	501 5	1115 7
760 0	512 34	0 02072	0 58025	0 60097	502 7	697 7	1200 4	0 7040	0 7178	1 4218	499 8	1115 9
750 0	510 84	0 02069	0 58880	0 60949	500 9	699 8	1200 7	0 7022	0 7210	1 4232	498 0	1116 1
740 0	509 32	0 02065	0 59757	0 61822	499 1	701 9	1200 9	0 7003	0 7243	1 4246	496 2	1116 3
730 0	507 78	0 02061	0 60657	0 62719	497 2	703 9	1201 2	0 6985	0 7176	1 4260	494 4	1116 4
720 0	506 23	0 02058	0 61581	0 63639	495 4	706 0	1201 4	0 6966	0 7309	1 4275	492 6	1116 6
710 0	504 67	0 02054	0 62530	0 64585	493 5	708 1	1201 6	0 6947	0 7343	1 4290	490 8	1116 8

Table 1 2 Saturated Steam Pressure Table

44

Both variations of the saturated steam tables are tabulations of pressure *P*, temperature *T*, specific volume *v*, specific enthalpy *h*, and specific entropy *s* The term "specific" means that the value of the property is given as "per pound " Subscripts are used to distinguish between water in different phases The subscript "f" (for fluid) is used for water The subscript "g" (for gas) is used for steam The subscript "fg" is used to denote the difference between the same property for water and steam Thus h_f is the enthalpy of water at a given pressure/temperature, h_g is the enthalpy of steam at the same temperature, and h_{fg} is the difference between h_f and h_g It should be evident that h_{fg} is the heat of vaporization

Table 1-3 is a summary of the notation used in steam tables Both saturated tables list the values of properties of water as a saturated liquid and a saturated vapor for the specified temperature/pressure condition They also list the change in each property between the liquid and vapor states For example, referring to the saturated steam temperature table (Table 1-1), the saturation pressure for steam at 540°F is 962 79 psia On the same line, the specific volume, enthalpy and entropy for water and saturated steam at this temperature can be found

T	=	Temperature (F)
P	=	Pressure (psi)
v	=	Specific volume of saturated liquid (cu ft/lb_m)
v_f	=	Specific volume of saturated liquid (cu ft/lb_m)
v_g	=	Specific volume of saturated vapor (cu ft/lb_m)
v_{fg}	=	Specific volume change of vaporization (cu ft/lb_m)
h	=	Specific enthalpy (BTU/lb_m)
h_f	=	Specific enthalpy of saturated liquid (BTU/lb_m)
h_g	=	Specific enthalpy of saturated vapor (BTU/lb_m)
h_{fg}	=	Specific enthalpy change of vaporization (BTU/lb_m)
s	=	Specific entropy (BTU/lb_m F)
s_f	=	Specific entropy of saturated liquid (BTU/lb_m R)
s_g	=	Specific entropy of saturated vapor (BTU/lb_m R)
s_{fg}	=	Specific entropy change of vaporization (BTU/lb_m R)
Sh	=	Number of degrees of superheat (F)

Table 1 3 Steam Table Notation

45

Tables 1-1 and 1-2 show values for three properties of steam, enthalpy, entropy and specific volume The values for enthalpy are given in units of BTU/lb The values for entropy are given in units of BTU/°R-lb

The specific volume, *v*, of steam is the inverse of its density ρ at a given temperature and pressure

$$\textit{Specific volume } v = \frac{1}{\rho}$$

Density is the amount of weight a substance has per unit of volume, usually expressed in lb/ft^3 Specific volume is the volume of a unit mass of a substance or ft^3/lb Understanding that the density and specific volume of water change with temperature and pressure is important because some steam plant equipment takes advantage of this characteristic of water For example, the steam drum, water tube, and downcomer arrangement shown in **Figure 1-13** uses density changes in water for natural circulation Since this portion of the boiler (or HRSG) boils or evaporates water to form steam, it is often referred to as the evaporator in HRSG's In a conventional fired boiler, this portion of the boiler is called the water walls because the boiler tubes make up the walls of the furnace

In **Figure 1-13**, saturated water at 548°F from the steam drum (1) flows through the downcomer (2) Saturation pressure for this temperature is 1028 49 psia The saturated steam temperature table (only a portion was shown in Table 1) gives the specific volume for saturated water at 548°F as v = 0 02169 x cu ft/lb

The water from the downcomer is distributed to the water wall tubes by the header (3), then flows up the water wall tubes (4) located in the walls of the boiler The water in the tubes absorbs heat from combustion in the boiler However, since the water is already at saturation temperature, the heat added causes some of the water to boil, making saturated steam From the saturated steam temperature table, the specific volume for saturated steam at 548°F is 0 43217 x cu ft/lb The ratio of the specific volume of water to steam at this temperature is about 19 9 In other words, the water is about 19 9 times more dense that the steam As a result of this difference in density, the steam bubbles rise in the tubes

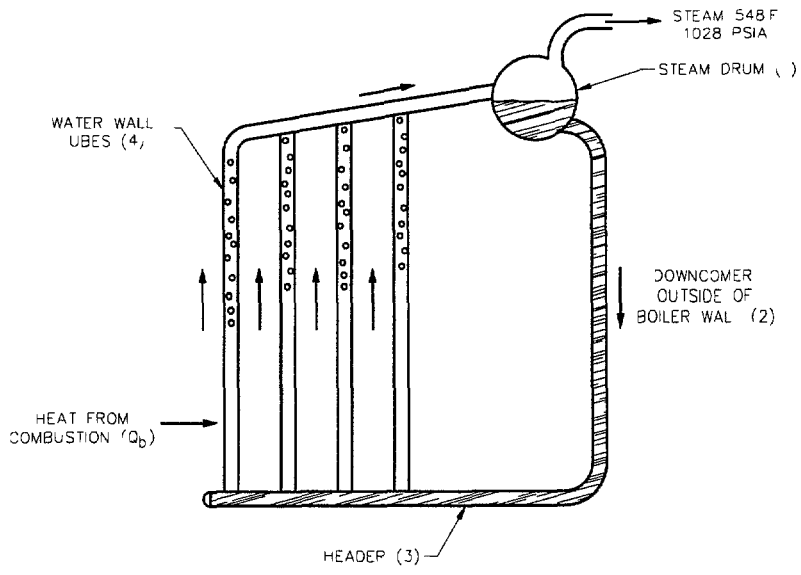

Figure 1-13 Boiler Water Circuit

Thus, there is a mixture of steam bubbles and water in the evaporator tubes There is only water in the downcomer, however Since the mixture of water and steam in the evaporator tubes is less dense that the water in the downcomer, there is greater pressure at the bottom of the downcomer than the bottom of the evaporator tubes The pressure difference causes water to circulate from the drum to the downcomer, upward through the evaporator tubes and back to the drum This phenomenon is called natural circulation

Mixtures of saturated water and steam like that in the waterwall or evaporator tubes occur often in a power plant Another example is the steam leaving a turbine and entering a condenser This steam is actually a mixture of water that has condensed in the turbine steam path Steam quality x is the property used to express that amount of steam present in a steam-water mixture As an example, if the steam at the turbine exhaust has a quality of 87%, each pound of the steam-water mixture leaving the turbine contains 0 87 pounds of steam and 0 13 pounds of water

Superheated steam tables give values of properties of superheated steam for a given pressure and temperature Table 1-4 is a portion of a superheated steam table

41

Abs Press Lb/Sq in (Sat Temp)		Sat Water	Sat Steam	Temperature Degrees Fahrenheit 550	600	650	700	750	800	850	900	1000	1100	1200	1300	1400	1500
950 (538 39)	Sh			11 61	61 61	111 61	161 61	211 61	261 61	311 61	361 61	461 61	561 61	661 61	761 61	861 61	961 61
	v	0 02141	0 4721	0 4883	0 5485	0 5993	0 6449	0 6871	0 7272	0 7656	0 7656	0 8753	0 9455	1 0142	1 0817	1 1484	1 2143
	h	534 74	1194 7	1207 6	1255 1	1294 4	1329 3	1361 5	1392 0	1421 5	1450 3	1507 0	1563 2	1619 5	1676 2	1733 3	1791 0
	s	0 7358	1 3970	1 4098	1 4557	1 4921	1 5228	1 5500	1 5748	1 5977	1 6193	1 6595	1 6976	1 7317	1 7649	1 7965	1 8267
1000 (544 58)	Sh			5 42	55 42	105 42	155 42	205 42	255 42	305 42	355 42	455 42	555 42	655 42	755 42	855 42	955 42
	v	0 02159	0 4460	0 4535	0 5137	0 5636	0 6080	0 6489	0 6875	0 7245	0 7603	0 8295	0 8966	0 9622	1 0266	1 0901	1 1429
	h	542 55	1192 9	1199 3	1249 3	1290 1	1325 9	1358 7	1389 6	1419 4	1448 5	1505 4	1561 9	1618 4	1675 3	1732 5	1790 3
	s	0 7434	1 3910	1 3973	1 4457	1 4833	1 5149	1 5426	1 5677	1 5908	1 6530	1 6530	1 6905	1 7256	1 7589	1 7905	1 8207
1050 (550 53)	Sh				49 47	99 47	149 27	199 47	249 47	299 47	299 47	449 47	549 47	649 47	749 47	849 47	949 47
	v	0 02177	0 4222		0 4821	0 5312	0 5745	0 6142	0 6515	0 6872	0 6872	07881	0 8524	0 9151	0 9767	1 0373	1 0973
	h	550 15	1191 0		1243 4	1285 7	1322 4	1355 8	1387 2	1417 3	1417 3	1403 9	1560 7	1617 4	1674 4	1731 8	1789 5
	s	0 7507	1 3851		1 4358	1 4748	1 5072	1 5354	1 5608	1 5842	1 6062	1 6469	1 6854	1 7197	1 7531	1 7848	1 8151
1100 (556 28)	Sh				43 72	93 72	143 72	193 72	243 72	293 72	343 72	433 72	543 72	643 72	743 72	843 72	943 72
	v	0 02195	0 4006		0 4531	0 5017	0 5440	0 5826	0 6188	0 6533	0 6865	0 7505	0 8121	0 8723	0 9313	0 9894	1 0468
	h	557 55	1189 1		1237 3	1281 2	1318 8	1352 9	1384 7	1415 2	1444 7	1502 4	1559 4	1515 3	1673 5	1731 0	1789 0
	s	0 7578	1 3794		1 4259	1 4664	1 4996	1 5284	1 5542	1 5779	1 6000	1 6410	1 6787	1 7141	1 7475	1 7793	1 8097

Courtesy Combustion Engineering, Inc and ASME

Source Steam Tables, page 22

Table 1 4 Superheat Steam Table

There are two differences between the saturated and superheated steam tables First, there is only one superheated steam table, not two as with the saturated tables Second, both the pressure and temperature of the steam are required to determine the values of properties of superheated steam With saturated steam, either the pressure or the temperature was sufficient to find the values of properties of water or steam The superheated steam tables are organized as a grid with pressure along the vertical axis and temperature on the horizontal axis

As with the saturated tables, specific volume *v*, enthalpy *h*, and entropy *s* are tabulated in the superheated steam tables Also given is the saturation temperature for each increment of pressure and number of degrees of superheat, shown as *Sh*, for each temperature and pressure Not all tables give values for *Sh* To calculate this value, the saturation temperature *T* is subtracted from the temperature of the superheated steam

$$Sh = T - T_{sat}$$

where Sh = number of degrees of superheat (°F)
T = temperature of superheated steam (°F)
T_{sat} = temperature of saturated steam at the same pressure as the superheated steam

Another method of making the values of properties of steam available is the Mollier Diagram (also called the Mollier chart) **Figure 1-14** is a Mollier Diagram The Mollier Diagram is a graphical presentation of the properties of saturated and superheated steam It is a graph of specific enthalpy *h* versus specific entropy *s* On this *h-s* diagram, there is a line that curves downward like a hill or a dome Above this saturation dome, as it is often called, the steam is superheated Below the saturation dome, there is a mixture of saturated steam and water In the superheated area, there are lines of constant temperature (called isotherms), lines of constant pressure (called isobars), and lines of constant superheat In the saturated area of the Mollier diagram, there are lines of constant pressure and constant quality (moisture) percent

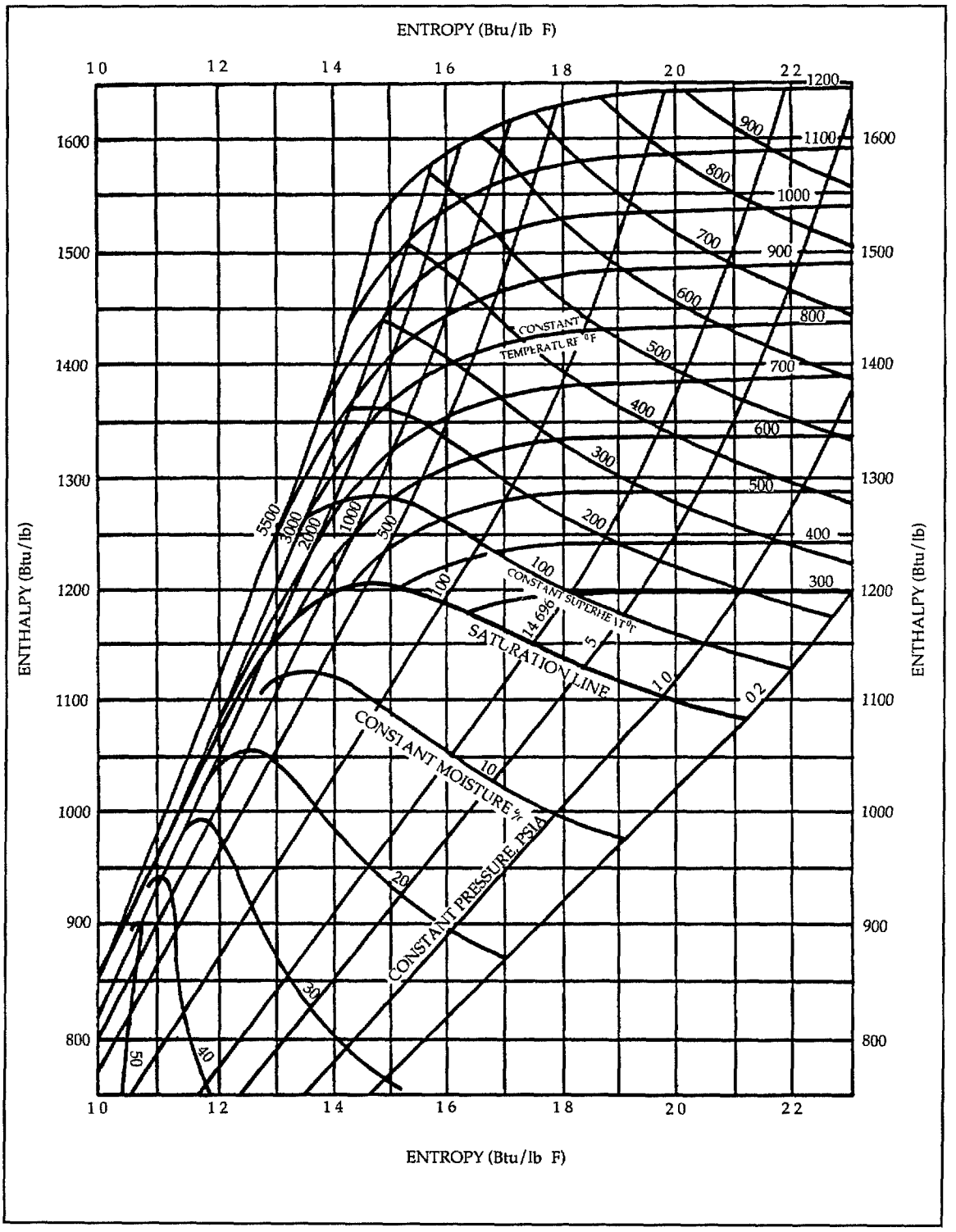

Figure 1-14 Mollier Diagram

50

The values of properties of steam can be determined directly from the Mollier Diagram In many cases, the diagram can be easier to use than the steam tables because the values can be read directly from it, rather than interpolated or calculated The accuracy of steam properties from a Mollier diagram is not always as good as that from the steam tables, especially if small versions of the Mollier chart are used

1 4 Heat Transfer

Much of the conversion of energy in power plants depends upon heat transfer Heat transfer is the transmission of heat energy Usually thought of as the flow of heat energy from one substance to another, heat transfer plays a central role in most energy conversion processes

All that is needed for heat transfer to occur is that two substances have different temperatures Energy moves from a high temperature object to a lower temperature object No heat is transferred if the two objects are at the same temperature

For example, a steel block at 400°F is placed next to another steel block at 100°F The higher temperature block cools as heat is transferred to warm the other block The rate of heat transfer is determined by how quickly the heat is transferred The greater the temperature difference, the faster the heat transfer rate As the blocks approach the same temperature, the rate of heat transfer decreases When the blocks reach the same temperature, there is no further heat transfer

There are three modes of heat transfer conduction, convection, and radiation One or more of these modes controls the amount of heat transfer in any application A power plant uses all three modes

1 4 1 Conduction

The internal energy of a substance depends upon molecular motion within the substance As the temperature of a substance increases, the molecular motion increases and thus the internal energy increases Heat is transferred by conduction from molecule to molecule within a substance or between touching substances

When, for instance, heat in the form of a flame is applied to one side of a steel plate, the molecules in the area of the plate in contact with the flame are made to move faster by contact with molecules in the flame Those molecules near the flame impact molecules in the plate further from the flame making those molecules move faster and thus increasing their temperature Over time, the side of the steel plate opposite the flame is heated to a higher temperature than it was before the flame was applied

Figure 1-15 shows a portion of the plate through which heat is transferred The temperature T_1 of side 1 of the wall is greater than the temperature of the other side T_2 Therefore, heat is being transferred through the wall The heat transfer rate varies directly with the area of the heat transfer surface, and inversely with its thickness

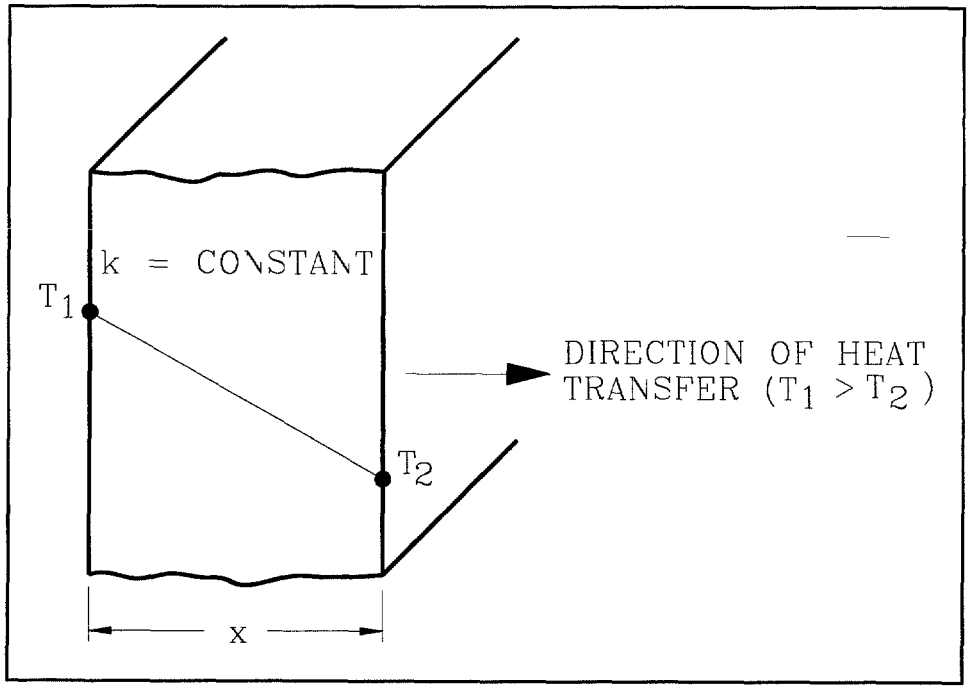

Figure 1-15 Heat Transfer Through Steel Plate

52

To calculate the heat transferred by conduction, the following parameters must be known

- Surface area A of the wall - The greater the surface area, the greater the heat transfer rate

- The wall thickness x - The thinner the wall, the greater the heat transfer rate

- The thermal conductivity k of the wall material - Thermal conductivity is a property of the material which measures how well it conducts heat, the higher the thermal conductivity, the better it conducts heat Table 1-5 gives the thermal conductivity of several materials

- The temperature difference across the wall T_1 - T_2 - The greater the temperature difference, the greater the heat transfer rate

Material	k (BTU-in/ft^2-hr-°F)
Silver	2880
Copper	2640
Carbon Steel	350
Alloy Steel (18% Cr/18% Ni)	108
Firebrick	0 5 to 4 5

Table 1-5 Thermal Conductivity of Common Materials

The basic relationship for heat transfer by conduction through a wall can be written as follows

$$Q = \frac{kA(T_1 - T_2)}{x}$$

where Q = the rate of heat transfer (BTU/hr)
k = thermal conductivity (BTU/hr-ft-°F)
x = wall thickness (ft)

This equation suggests the ideal characteristics for a heat exchanger tube where the objective is maximum heat transfer An ideal tube material would be one with a high thermal conductivity and sufficient structural strength to allow minimal wall thickness Additionally, increased area is desirable and therefore the number of tubes in heat exchangers is often increased in design to increase the surface area and thus the heat transfer rate Regardless of the characteristics of the tubes or their number, however, no heat transfer takes place without a temperature differential across the tube wall

Often the equation for heat transfer by conduction is written in a slightly different form than previously shown The quantity k/x is replaced with a new parameter, U, the heat transfer coefficient In this case, the equation becomes

$$q = UA\,\Delta T$$

where q = the rate of heat transfer (BTU/hr)
U = the overall heat transfer coefficient (BTU/ft^2-hr-°F)
A = the surface area of heat transfer (ft^2)
ΔT = temperature difference (°F)

1 4 2 Convection

Convection is the transfer of heat by motion and mixing of a fluid It usually occurs between a solid and a fluid (gas or liquid) by a combination of molecular conduction and fluid motion Convection is similar to conduction except the fluid is moving, carrying its heat energy with it So convection involves the physical transfer

of heat by fluid motion and mixing In fact, as the fluid moves faster more heat is transferred because greater mixing (turbulence) occurs Energy transfer between individual molecules of the fluid, or between the solid surface and the fluid still takes place by conduction

Figure 1-16 is a generalized diagram of heat transfer by convection Convective heat transfer involves the transfer of heat between a surface at temperature, T_s, and a fluid at temperature, T_b, referred to as the bulk temperature of the fluid The fluid bulk temperature is the average temperature of the fluid flowing over the solid surface If the temperature of the solid surface is higher than the bulk temperature of the fluid, then heat is being transferred from the solid to the fluid In this case, the fluid nearest the solid surface is hotter than the bulk temperature Heat is transferred from the fluid nearest the solid surface to the remaining fluid by a combination of conduction and convection

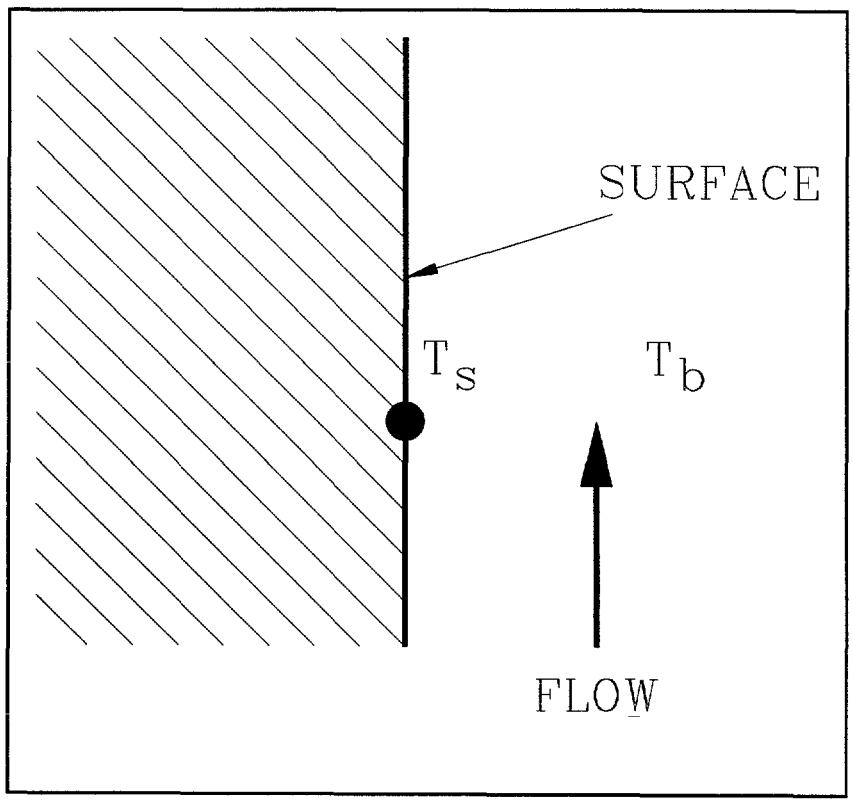

Figure 1-16 Heat Transfer by Convection

55

In convective heat transfer, there is a thin layer of fluid at the surface of the solid called the boundary layer or film The velocity of molecules of fluid on the surface of the solid (at the "bottom" of the boundary layer) is zero The velocity of the fluid molecules increases as the distance from the surface of the solid increases The boundary layer ends where the velocity of the fluid is the same as that of the bulk of the fluid

The boundary layer is very thin, only a few thousandths of an inch, for most convective heat transfer The boundary layer can be thought of as a layer of insulation between the surface of the solid and the bulk of the fluid The thicker the boundary layer, the less heat transfer takes place The thickness of the boundary layer, and thus the heat transfer, depends upon the velocity and turbulence of the fluid The higher the velocity and the greater the turbulence, the greater the heat transfer

Free or natural convection, and forced convection are two types of convective heat transfer Natural convection occurs when the fluid motion is due to local density differences alone Natural convection is often a smooth flow at low velocity with little turbulence and only mild mixing Forced convection results when devices such as fans increase the velocity of the fluids Generally, the heat transfer rates for forced convection are greater than those for natural convection because the velocity and turbulence of the flow are greater than for natural convection

Convective heat transfer depends on the type of fluid, the pressure and temperature of the fluid, direction and velocity of fluid flow, and many other variables Convective heat transfer is, therefore, more difficult to analyze than conductive heat transfer However, the basic relationship for heat transfer by convection has the same form as that for heat transfer by conduction

$$Q = hA(T_s - T_b)$$

where Q = the rate of heat transfer (BTU/hr)

h = convective heat transfer coefficient (BTU/hr-ft$_2$-°F)
A = cross-sectional area for heat transfer (ft^2)
T_s = surface temperature
T_b = fluid bulk temperature

The convective heat transfer coefficient, *h*, is also termed, unit conductance, because it is defined as the conductance per unit area Average convective heat transfer coefficients over a surface can be used to describe convective heat transfer in most situations The average convective heat transfer coefficient is a function of the thermal and hydrodynamic properties of the fluid and the surface geometry Approximate ranges for some fluids are shown in Table 1-6

Condition	h (BTU/ft^2-hr-°F)
Air, free convection	1 to 5
Air, forced convection	5 to 50
Water, forced convection	50 to 2000
Water, boiling	500 to 20,000

Table 1-6 Typical Convective Heat Transfer Coefficients

1 4 3 Radiation

All substances radiate energy Radiation or radiant heat transfer is the transmission of energy in a straight line of electromagnetic waves traveling at the speed of light Electromagnetic waves are another form of energy Light, X-rays, and radio waves are examples of electromagnetic waves The difference between them is their wave length Wave length is related to frequency, the higher the frequency the shorter the wave length

Radiant heat is electromagnetic radiation with a relatively long wavelength as compared to light and x-ray Radiant heat is continuously emitted and absorbed by all substances The electromagnetic radiation depends on the temperature of a body Energy at the body's surface is converted into electromagnetic waves that emanate from the surface and strike other bodies Some of the thermal radiation is absorbed by the receiving bodies and reconverted into internal energy The energy that is not absorbed is reflected from or transmitted through the bodies

Radiant heat transfer, unlike conduction or convection, requires no intervening medium, either solid or fluid Radiant heat transfer is, therefore, the only way to transfer heat energy through a vacuum Examples of radiant heat transfer are the transmission of the sun's heat to the earth, heat that radiates from a fireplace, or infrared heaters

Heat transfer by radiation is determined by the temperature of the body radiating heat and the color of the bodies transmitting and receiving the heat energy The greater the temperature of the body transmitting the heat, the more heat it radiates The closer to black the color of the body transmitting heat, the more heat radiated Bodies with surfaces having light colors or polished surfaces radiate less heat Similarly, the heat transfer to a body by radiant heat transfer depends upon its color Dark colors absorb more radiant heat than light colors Radiant heat that is not absorbed is reflected

In theory, there is a body called a blackbody that is perfectly black Such a body absorbs all of the radiant heat reaching its surface and thus, none is reflected If there were a true black body, an equation called the Stefan-Boltzman Law (shown below) would describe the heat transfer by radiation

$$Q = AsT_s^4$$

where Q = the rate of heat transfer (BTU/hr)
s = Stefan-Boltzmann constant 0 1713 x 10^8 BTU/hr-ft^2-°R^4
T_s = absolute temperature (°R = 459 67 + °F)

In reality, there is no such thing as a perfect blackbody All real substances reflect some of the radiant heat energy that strike them As a result, real bodies are referred to as graybodies The heat transfer by radiation from a gray surface can be expressed by

$$Q = eAsT_s^4$$

where e = the emittance of the surface, or emissivity

Emissivity is a factor by which the blackbody heat transfer rate is multiplied to take into account that the blackbody is the ideal case Emissivity is dimensionless and has a maximum value of one for the theoretical blackbody Table 1-7 shows some representative emissivity values

Material	Emissivity *e*
Polished Metals	0 01 to 0 08
Unfinished Metals	0 1 to 0 2
Oxidized Metals	0 25 to 0 7
Ceramic Oxides	0 4 to 0 8
Special Paints	0 9 to 0 98

Table 1-7 Emissivity Values

As can be seen from these equations, radiant heat transfer is strongly influenced by the temperature of the body radiating heat The amount of heat that is radiated at low temperatures (around room temperature) is so low that it is relatively insignificant in comparison to conductive and convective heat transfer In most power plant heat transfer situations, heat transfer by radiation is so low that it is neglected in performing heat transfer calculations

There are two situations in power plants where the temperature is so high that radiant heat transfer is very significant, however One of these situations is in the furnace of a fired boiler The fireball in the furnace of a convention boiler is around 3000°F Most of the heat transfer in the furnace is by radiation

The second situation where radiant heat transfer is significant is inside the gas turbine combustion section where the fuel is burned Since heat transfer to the components of the gas turbine is not desirable, the gas turbine incorporates many design features to cool the combustion section

1 4 4 Energy Balance and the Heat Transfer Equation

Most power plant heat transfer situations involve all three types of heat transfer conduction, convection and radiation Heat transfer by radiation, however, is seldom significant and as a result is usually assumed to be zero

In explaining the different types of energy, several important relationships have been developed which are also important in heat transfer When heat is added to a substance, it increases the molecular activity of the substance The effect of this increase is an increase in the temperature of the substance Of course, different substances are affected to different magnitudes by the addition of heat Thus, when a given amount of heat is added to different substances, their temperatures increase by different amounts The relationship between the heat added Q and the change in temperature ΔT can be shown by the heat transfer equation given earlier

$$q = UA\ \Delta T$$

where q = the rate of heat transfer (BTU/hr)
U = the overall heat transfer coefficient (BTU/ft^2-hr-°F)
A = the surface area of heat transfer (ft^2)
ΔT = temperature difference (°F)

The heat transfer coefficient U is a measure of the overall ability for heat transfer to occur

The heat transfer equation can help explain how equipment is constructed and operated For example, an electric motor generates heat when it does work to turn a pump or fan To prevent the motor from overheating and failing, heat must be removed and transferred to the surrounding air **Figure 1-17** shows a motor with fins or ribs built into the motor casing

The reason that fins are used can be seen from the overall heat transfer equation Fins increase the surface area across which heat is transferred Since area A is larger, so is the rate of heat transfer Q Many heat transfer surfaces have fins to increase heat transfer, such as the economizer tubes of the boiler and tubes in HRSG's

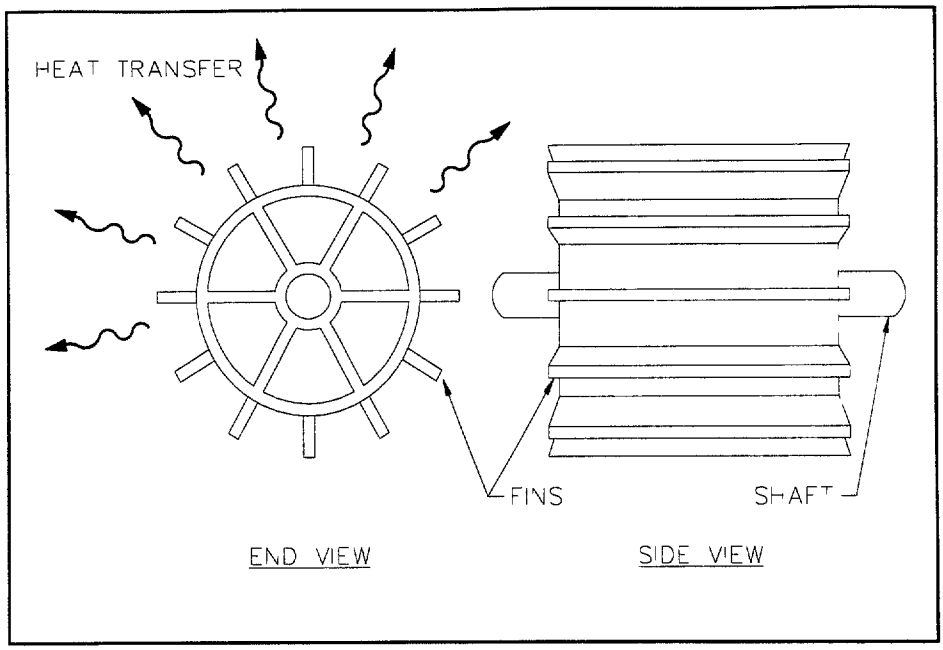

Figure 1-17 Motor with Fins (or Ribs)

The overall heat transfer equation can also be used to evaluate heat transfer through a tube Tubes are used throughout the power plant to transfer heat from one fluid to another Boilers, condensers, feedwater heaters, and oil coolers use tubes Heat is transferred from one fluid to another through a tube by convection and conduction **Figure 1-18** shows a portion of a condenser tube

Steam condenses on the outside of the condenser tube Cooling water flows through the inside Heat from the steam is first transferred to the tube surface by convection and then by conduction through the tube wall Heat is finally transferred from the inside surface of the tube to the cooling water by convection

The overall heat transfer equation shows that the heat transfer can be affected by the surface area of the tube, the temperature difference across the tube, and the overall heat transfer coefficient of the tube In the condenser, the surface area of the tube is fixed by design, but the heat transfer coefficient (U) and the temperature difference (ΔT) can change

61

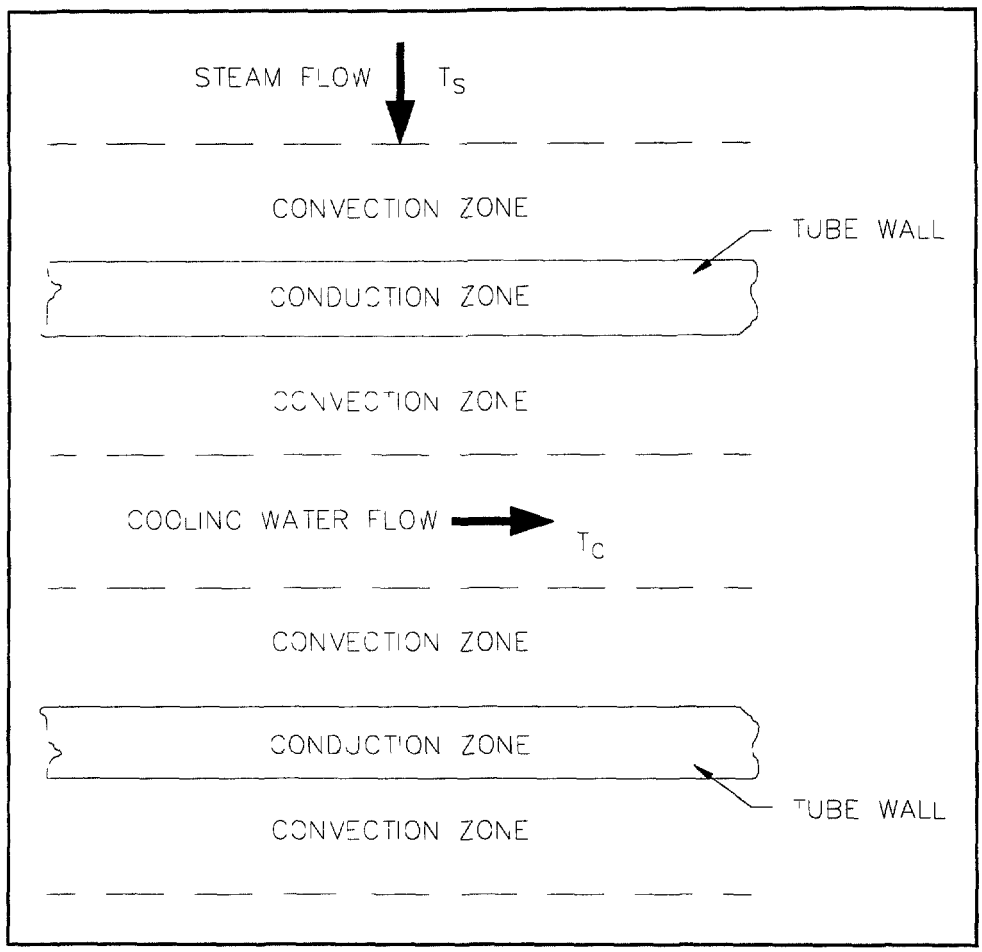

Figure 1-18 Condenser Tube

For example, the heat transfer coefficient (U) decreases if the tubes become dirty However, because the same amount of steam is being condensed, the overall heat transfer must remain the same In order to maintain the same heat transfer rate, the temperature difference (ΔT) across the tubes must increase to offset the decrease in the heat transfer coefficient The ΔT is the difference between the temperature of the circulating water and the steam The circulating water temperature does not change, therefore for ΔT to increase, the temperature of the steam in the condenser must increase Since the steam in the condenser is saturated, the condenser pressure also increases Increased condenser pressure results in a greater turbine back pressure Therefore, not as much heat energy is removed from the steam in the turbine, and plant efficiency decreases

1 5 Combustion Theory

The combustion of fuel has a significant impact on the efficiency of a generating unit In some instances, such as incomplete combustion of fuel, that impact is direct In other instances, the impact may be indirect as in operational limits that are required to comply with environmental requirements and result in inefficient operation

1 5 1 Principles of Combustion

Combustion is defined as the rapid chemical combination of oxygen with the combustible elements of a fuel Combustible elements are those elements that combine with oxygen The three basic elements needed for combustion are fuel, oxygen, and heat The relationship of the three combustion requirements is illustrated by the combustion triangle, shown in **Figure 1-19**

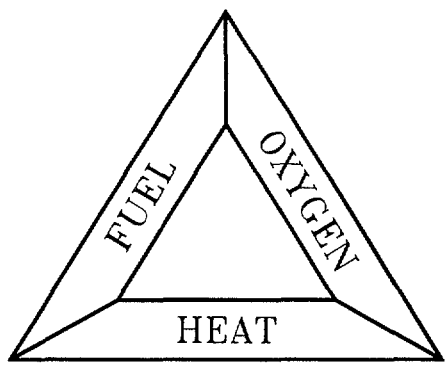

Figure 1-19 Combustion Triangle

Fuel

The fuel supplies the chemical elements - carbon (C), hydrogen (H), and sulfur (S) which combine with oxygen (from air) to produce heat The oxygen must be mixed with the fuel to achieve combustion

The difficulty of the task of mixing the fuel with oxygen depends upon the fuel being burned If natural gas is the fuel, mixing is very easy since the mixing of two gases requires only turbulence If the fuel is liquid (oil) the task of mixing is more difficult than for gas Solid fuel (coal) is the most difficult to burn

In the case of both liquid and coal, good mixing is made possible by increasing the ratio of the surface area to the mass of the particles/droplets of fuel as much as possible For liquid fuels, mixing is done by using spray type nozzles that disperse the liquid into a mist of very small droplets If heavy oil is used, it is necessary to heat the oil first in order to lower the viscosity (thickness) of the oil for dispersion For solid fuel, the fuel is pulverized into very small particles with the fineness of flour The burners for all three types of fuel promote considerable turbulence in order to achieve good mixing between the gas or fuel particles and the combustion air

Oxygen

For normal combustion in gas turbine and steam generator applications, the source of oxygen is air Atmospheric air is a mixture of gases Air has about 21% oxygen, 78% nitrogen, and 1% other gases The large percentage of nitrogen in air is a source of inefficiency in combustion because in supplying oxygen for combustion nitrogen is supplied as well The nitrogen does nothing to support the combustion process but it carries away a portion of the heat energy available from combustion

Thus, for example, since about 2 4 pounds of oxygen is required to burn one pound of "average" coal in a conventional boiler, it is necessary to provide about 10 2 pounds of air In the combustion process, nitrogen enters the boiler at ambient temperature (assume 60°F) and leaves the boiler at around 300°F With a specific heat of about 0 25 BTU/lb, the nitrogen carries away about 507 BTUs for each pound of coal burned

Another problem associated with nitrogen in the air is the potential for the formation of oxides of nitrogen (NOx) NOx combines with water to form nitric acid This contributes to depletion of the ozone, creation of acid rain, and other environmental problems

It is inefficient to provide more oxygen that required to burn the fuel for the same reason that nitrogen in the air results in inefficiency in combustion Oxygen in excess of that required to burn the fuel completely is heated and carries away more heat One problem in maximizing the efficiency of the plant is to determine how much oxygen is required for complete combustion

Heat

Fuels need heat to start the combustion reaction Heat raises the fuel temperature until the combustion reaction starts The temperature at which combustion starts is the ignition, or kindling temperature The source of heat required to start the combustion is external Once the combustion process has started, however, the heat of combustion of the fuel makes the process self sustaining

In modern boiler furnaces, small oil or gas fires usually supply the heat needed to ignite the primary fuel These small fires are called ignition torches or ignitors and are usually lit by an electric spark In some plants high-energy electric sparks produced by high-voltage transformers are used as ignitors

In a gas turbine, ignition occurs in the combustor which uses a spark plug to provide the initial source of heat These spark plugs receive their energy from ignition transformers At the time of firing, a spark ignites the fuel in one of the combustion chambers The remaining chambers are ignited by the flame established in the first combustion chamber

1 5 2 Requirements for Complete Combustion

Complete combustion of fuel is a requirement for high efficiency Complete combustion is also a safety consideration since the if unburned fuel is allowed to accumulate it can explode Achieving and maintaining complete combustion requires an understanding of the requirements for complete combustion The abbreviation MATT is often used to describe those requirements MATT stands for the following

- M - Mixing - The fuel and the oxygen must be mixed well to assure that the chemical reactions of combustion can take place Turbulence of the fuel air mixture in the combustion zone is used to assure good mixing

- A - Air (Oxygen) - Adequate oxygen must be supplied to assure that all of the fuel can react with oxygen in the combustion process

- T - Temperature - The temperature of the fuel and air must be great enough for the chemical reactions of combustion to occur

63

- T - Time - A small but finite amount of time is required for the chemical reactions of combustion to take place If the heat and/or oxygen required to support combustion are removed before a particle of fuel is burned to completion, incomplete combustion results

The MATT abbreviation provides valuable insight into the combustion process There are, however, other important factors that influence combustion

Fuel Characteristics

The fuel supplies carbon (C), hydrogen (H), and sulfur (S), which combine with oxygen to produce heat Fuels must be prepared so that oxygen can come in contact with all the combustibles in the fuel Methods of preparing fuels are

- Coal is pulverized or converted to a gas (syngas)
- Oil is sprayed through a nozzle to produce a fine mist

Natural gas requires no special preparation since it is a gas Conventional boilers burn coal, oil, and gas Gas turbines use fuel oil, natural gas and coal-derived gas (syngas)

Some fuels are easy to burn completely while others are relatively difficult to burn completely Natural gas and light fuel oils are "easy fuels" while coal and heavy fuel oils are "difficult fuels " Properties of fuels that determine the ease or difficulty with which they can be burned completely include

1. Amount of volatile matter or hydrogen - The more, the better, since these fuel components are themselves "easy fuels "
2. Ash content - High ash content makes fuel harder to burn since ash does not burn and so interferes with the combustion process
3. Amount of water in the fuel - The more water in the fuel, the harder it is to burn, because water does not aid the combustion process In addition, the water in the fuel changes to steam and, in so doing, carries away considerable heat
4. Large particles of fuel - As described earlier, the smaller the particles of fuel, the better the mixing Large particles result in poor mixing and usually result in incomplete combustion

Combustion Air

Enough air must be supplied to provide all the oxygen needed for complete combustion The theoretical amount of air required to burn a fuel is determined by combustion calculations The theoretical amount of air, referred to as theoretical air or stoichiometric air, is the amount required to burn all the fuel when the two are mixed perfectly

Perfect mixing of fuel and air is not possible, because it is difficult to get the fuel dispersed widely enough for the air to surround each particle Therefore, more than the theoretical amount of air must be used to obtain complete combustion This additional air is called excess air The amount of excess air is given as a percentage of the theoretical air

Thus it is always necessary to provide more than the stoichiometric amount of oxygen to the combustion process in order to get maximum efficiency The determination of the amount of excess oxygen involves examining the tradeoff between the efficiency penalty for incomplete combustion against that for excess air Excess air results in inefficiency because of the heat that it carries away The amount of excess air required depends upon the difficulty of mixing the fuel and oxygen Typical values of excess air for various fuels in conventional boilers are

- Coal 10 - 40%
- Oil 8 - 15%
- Natural gas 5 - 10%

The optimum amount of excess air required for conventional boilers is commonly determined by tests The amount of excess air is lowered until there is evidence of unburned fuel The air is then increased until there is no unburned fuel Most plants operate with slightly more excess air than needed for complete combustion The excess air provides a margin of safety

In a gas turbine, the fuel is mixed with compressed air in the combustion chamber and delivered at a high pressure to the combustors Only a relatively small fraction of the air is supplied to the combustor to provide oxygen for combustion in comparison to a conventional boiler, however The remaining air is used for cooling

comparison to a conventional boiler, however The remaining air is used for cooling the combustors and turbine blading The air used for combustion enters the combustion zone through metering holes that are sized to admit the proper amount of air for complete combustion The large amount of excess air used in gas turbines tends to reduce their efficiency Fortunately, when a gas turbine is used in a combined cycle with a HRSG, it is possible to recover much of the heat in the exhaust gas

When multiple burners and/or combustors are used, the fuel and air must be divided among them while assuring that each burner or combustor has the same amount of excess air The use of multiple burners complicates the combustion process because it is difficult to get the same amount of air and fuel at each burner

1 5 3 Combustion Products

When a fuel is burned, the products of combustion come from the chemical reaction of the fuel and the combustion air (See **Figure 1-20**) The products of complete combustion of a fuel are shown in Table 1-8 Table 1-9 shows the additional combustion products that are caused by excess air

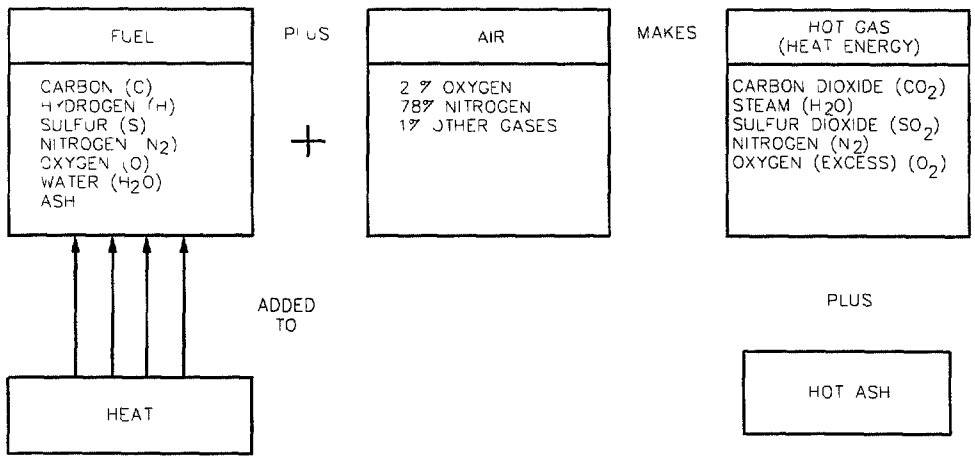

Figure 1-20 Products of Combustion

68

Product	Symbol	Type	Pound of Product	Per Pound of
Carbon dioxide	CO_2	Gas	3 67	Carbon in fuel
Sulfur dioxide	SO_2	Gas	2 0	Sulfur in fuel
Nitrogen	N_2	Gas	1 0	Nitrogen in fuel
Nitrogen	N_2	Gas	77	Theoretical air
Moisture				
▸ From burning hydrogen	H_2O	Vapor	9 0	Hydrogen in fuel
▸ From moisture in fuel	H_2O	Vapor	1 0	Moisture in fuel
▸ From moisture in air	H_2O	Vapor	1 0	Moisture in air
Ash	Ash	Solid	1 0	Ash in fuel (coal)
Heat		Temperature		

Table 1-8 Major Products of Complete Combustion

PRODUCT	SYMBOL	TYPE	POUNDS OF PRODUCT	PER POUND OF
Nitrogen	N_2	Gas	0 77	Excess air
Oxygen	O_2	Gas	0 23	Excess air
Moisture	H_2O	Vapor	1 0	Moisture air

Table 1-9 Major Combustion Products Caused by Excess Air

One of the most important "combustion products," oxygen, is not really a combustion product because it does not enter into the chemical reactions of combustion If a fuel were burned completely with the theoretical air, there would be no oxygen in the products of combustion In real combustion processes, more air is supplied to the combustion process than is used to burn the fuel As a result, there is oxygen in the products of combustion (the flue gas) Accordingly, oxygen (chemical symbol O_2) in the flue gas is used to measure the amount of excess air The percentage of O_2 in the flue gas is monitored by plant instrumentation Boilers are usually equipped with oxygen recorders to display O_2 and thus the amount of excess air in the flue gas at any time Portable instruments are also available to check the amount of oxygen in the flue gas

In many plants, the amount of excess air is controlled using a signal from permanently installed oxygen sensors The signal is used to maintain a set amount of O_2 in the flue gas This may be done manually or, more commonly, automatically

Another method of checking the amount of excess air is to measure the amount of CO_2 in the flue gas This is usually not as accurate as measuring the amount of oxygen, however, and so it is seldom used to control excess air

When fuel is not burned completely, additional products of combustion are

1 Carbon Monoxide (CO)
2 Unburned Fuel
3 Carbon Particles

Carbon monoxide is formed when there is not enough excess air to burn the carbon in the fuel to completion The formation of carbon monoxide (CO) causes inefficiency because much more heat is released (14,100 BTU/lb compared to 3,960 BTU/lb) when burning carbon to completion to produce carbon dioxide When CO is produced, unburned fuel in the form of carbon particles can also result Formation of carbon monoxide and unburned fuel can result from

- The fuel not being properly mixed with air
- The temperature being too low to allow fuel to burn completely
- The fuel particles being too large to burn (inadequate mixing)

When insufficient excess air is used, smoke is often a result The amount of smoke, usually measured as opacity, in the flue gas is principally unburned carbon

1 5 4 Undesirable Products of Combustion

The undesirable products of combustion are sulfur oxides, NOx, carbon monoxide, unburned fuel, and ash

Sulfur Oxides - Sulfur oxides can cause corrosion problems if flue gas temperatures drop below the acid dew point The acid dew point is the temperature at which moisture in the flue gas condenses and combines with the sulfur oxides in the flue gas to form acid The acid dew point depends on the amount of sulfur oxides and water in the flue gas The greater the amount of sulfur in the fuel, the lower the acid dew point Typical acid dew points vary from 160 to 220°F

To avoid corrosion of components, the flue gas temperature must be kept above the acid dew point For conventional boilers, the flue gas falls below the acid dew point in the regenerative air heater Control of flue gas temperature in the regenerative air heater is usually done by preheating the combustion air that enters the regenerative air heater using heat from turbine extraction steam There is little that can be done for control in HRSG's

Another major concern regarding sulfur oxides is air pollution Emission of sulfur is limited by law Plants burning high sulfur content fuel are sometimes equipped with a desulfurization system (usually called scrubbers) to remove sulphur oxides from the flue gas

Sulphur oxides are usually not a problem in gas turbine and combined cycle applications where natural gas and syngas are burned These fuels have very little sulfur in the fuel and so the sulfur oxide emissions are negligible

71

NOx - NOx is produced by high temperature combustion Like sulfur oxides, the amount of NOx that can be released is limited by law Fuel burners have been developed that limit the amount of NOx produced by causing the fuel to burn at lower temperatures When the burners are properly adjusted, the amount of NOx produced should be within acceptable limits In addition, water or steam is injected into the combustion section of some gas turbines to reduce NOx emissions by reducing the temperature of combustion

Unburned Fuel - A dangerous result of incomplete combustion is unburned fuel When there is not enough oxygen to burn the fuel completely or other conditions hamper complete combustion, unburned or burning fuel travels through the system Accumulations of unburned fuel can result in an explosion or uncontrolled fire

Carbon Monoxide - Carbon monoxide is not undesirable in itself, but its presence indicates inadequate excess air or incomplete combustion as explained earlier

Fly Ash - Fly ash is another undesirable part of the flue gas The amount of fly ash released, as indicated by opacity, is limited by law If the ash fusion temperature is too low, the molten ash forms deposits on heating surfaces, slowing down the heat transfer rate Fly ash is generally negligible in gas turbines

1 5 5 Heating Value of Fuel

The heating value of fuel is a parameter that is necessary to determine how much fuel must be burned to produce a given amount of heat for power or steam The heating values of fuels are usually determined by testing In the test for the heating value of fuel, a measured amount of fuel is burned in a sealed container (called a calorimeter) that is immersed in a known amount of water The temperature of the water is measured before the fuel is burned The water temperature is measured again after the fuel is burned and the temperatures of the container and water cool to the same value Since the water absorbs the heat of combustion, the amount of heat generated in the burning of the fuel can be calculated by using the temperature rise of the water and the specific heat of the water

12

There are two different heating values that can be determined from this test The first is the higher heating value (HHV) The HHV assumes that all of the heat generated in burning the fuel can be used in a process such as powering a gas turbine This fails to account, however, for the fact that one of the products of combustion is water which leaves the combustion process as steam The water in the combustion products absorbs the heat of vaporization of water and carries it away in the flue gas (about 1030 to 1080 BTU per pound of water)

The lower heating value (LHV) is used to account for the loss due to creation of water in combustion The amount of water in the combustion products is determined by testing The amount of heat that the water would carry away is then calculated and subtracted from the HHV to obtain the LHV There can be a significant difference between HHV and LLV As an example, the HHV of propane gas is 2480 1 BTU/ft_3 while its LHV is 2282 6 BTU/ft_3 (an 8% reduction in heating value compared to HHV) The LHV is a more realistic measure of the heating value of fuel since if one were to use the HHV, losses due to moisture in the flue gas would not be accounted for One could, as a result, underestimate the amount of fuel required to generate a given amount of power

Both HHV and LHV are used in the power utility industry In conventional, fired boilers in the United States, it is common to use HHV in the determination of boiler efficiency The performance of gas turbines is usually specified in terms of LHV

Combined Cycle
Principles Course
Module 2

Introduction to Combined Cycle Power Generation

FCS
Fossil Consulting Services, Inc.
Columbia, Maryland

74

TABLE OF CONTENTS

Section		Page
2 0	INTRODUCTION TO COMBINED CYCLE POWER GENERATION	1
2 1	Combined Cycle Fundamental Theory and Operation	1
2 1 1	Overview	1
2 1 2	The Gas Turbine (Brayton) Cycle	4
2 1 3	The Steam-Water (Rankine) Cycle	8
2 1 4	Heat Recovery Steam Generator (HRSG)	11
2 1 5	The Combined Cycle	13
2 2	Cycle Parameters and Their Impact on Plant Performance	15
2 2 1	Rankine Cycle Parameters and Efficiency	15
2 2 2	Gas Turbine Parameters and Efficiency	18
2 2 3	Combined Cycle Parameters and Efficiency	23
2 3	Benefits of the Combined Cycle	25
2 3 1	Operational Benefits	27
2 3 2	Environmental Aspects	29
2 3 3	Repowering and Economic Aspects	30
2 3 4	Combined Cycle, Cogeneration, and IPP Power Plants	31
2 4	Fuels for Combined Cycle Power Plants	33
2 4 1	Gaseous Fuels	34
2 4 2	Liquid Fuels	36
2 4 3	Solid Fuels	39
2 4 4	Other Considerations	40
2 5	PSI Energy's Wabash Unit #1 Repowering Project	41
APPENDIX A	Combined-Cycle Thermodynamic Principles & Economics	A-1
APPENDIX B	Combined-Cycle Developments	B-1

2 0 INTRODUCTION TO COMBINED CYCLE POWER GENERATION

2 1 Combined Cycle Fundamental Theory and Operation

This Module provides an overview of the principles and theory of combined cycle power plant design and operation The objective is to provide plant personnel with a basic understanding of the major components of the combined cycle power plant This Module also explains why combined cycle power plants have become so popular Finally, the Module will help the plant staff develop an appreciation for the unique characteristics of the combined cycle power plant

2 1 1 Overview

There are many different types of power plants including thermal power plants and hydraulic power plants Thermal power plants burn some sort of fuel (such as fossil or nuclear fuel) to produce heat energy that is converted to electrical energy through a series of intermediate processes Hydraulic power plants convert the potential energy of water to electrical power as it flows from higher to lower elevations

The "traditional" thermal power plant is the Rankine cycle plant, named after the man who invented the cycle A power plant cycle is a series of processes in which a fluid, generally water/steam, is used to convert heat energy to mechanical energy The Rankine cycle in its simplest form consists of a boiler, a turbine, a condenser, and a boiler feed pump Early plants had thermal efficiencies of approximately 25% to 30% Only 25% to 30% of the heat energy in the fuel burned in these plants was converted to electrical energy The rest was lost in various ways Rankine cycle plants are still being built today Units 2 through 6 at Wabash River Plant are Rankine cycle type units

The Rankine cycle has been refined considerably over the years and made more efficient by the addition of components like feedwater heaters, superheaters, and reheaters The efficiency of the Rankine cycle has also been improved by increasing the pressure and temperature of the cycle The most efficient Rankine cycles ever built (Philadelphia Electric's Eddystone plant, Units 1 and 2) were placed in service around 1960 The design thermal efficiency of Unit #1 at Eddystone was 42% The laws of thermodynamics and considerations such as material limitations have prevented any significant improvement since then

In this text, power plant efficiency is discussed in terms of percent thermal efficiency The utility business in the United States commonly uses heat rate to measure efficiency Heat rate is measured in BTU/KWh Thus, heat rate shows the amount of heat in BTUs that is required to produce a kilowatt-hour of electrical energy Thermal efficiency can be converted to heat rate by using the conversion factor 3413 BTU = 1 KWh If a power plant could be built with 100% efficiency, its heat rate would be 3413 BTU/KWh The more realistic efficiency of the Eddystone plant, 42% thermal efficiency, corresponds to a heat rate of about 8126 BTU/KWh

The first practical gas turbine was developed in Europe in 1939 At the end of World War II, the first gas turbines were developed for aircraft Shortly after the war, the first industrial gas turbines for power production and other industrial applications, such as driving locomotives, were introduced in the United States Gas turbines use another type of power plant cycle called the Brayton cycle, also named after its inventor The first commercial, industrial gas turbines were relatively inefficient, typically having thermal efficiency of 16% to 17%

As the gas turbine industry matured, the design of gas turbines, like that of Rankine cycles, was improved Use of gas turbines in the power utility industry increased steadily from their introduction in the late 1940's Gas turbines reached a peak of popularity in the early 1970's At that time, the growth in demand for electric power exceeded the ability of the industry to meet electrical demand through addition of Rankine cycle plants alone Gas turbines were attractive because they could be built much more rapidly than Rankine cycle plants

The oil crisis of the early 1970's brought a sudden halt to the popularity of gas turbines for three reasons First, almost all utility gas turbines use either gas or oil for fuel The cost of these fuels went up dramatically while their availability went down Secondly, the oil crisis brought renewed attention to the need for efficiency (getting more energy out of the fuel) Gas turbines of this period were significantly less efficient than Rankine cycle plants Typical gas turbine thermal efficiencies were 20% to 25% Finally, the emphasis on conserving energy throughout the US reduced the rate of increase in electrical power demand and thus the need for new power plants

The oil crisis resulted in a slowdown in the growth of the gas turbine industry For many years, the biggest market for US manufacturers of heavy industrial gas turbines was in foreign countries The best customers were oil producing countries where the cost of oil and gas was still low and the growth of electrical demand was still high Gas turbines in these countries were also used in other applications such as compressors for gas pipelines

The gas turbine industry has seen a resurgence in the last 10 to 15 years Part of this recovery has resulted from steady increases in gas turbine efficiency due to material and design improvements Another cause for growth in the gas turbine industry has been the growing popularity of combined cycle plants A combined cycle plant consists of one or more gas turbines that drive generators and exhaust into a special boiler called a heat recovery steam generator (HRSG) that generates steam for a Rankine cycle unit

One of the principal reasons for the popularity of the combined cycle power plants is their high thermal efficiency Combined cycle plants with thermal efficiencies as high as 52% have been built Combined cycle plants can achieve these efficiencies because much of the heat from the gas turbine(s) is captured and used in the Rankine cycle portion of the plant The heat from the exhaust gases would normally be lost to the atmosphere in a simple gas turbine cycle

Another reason for the popularity of combined cycle plants is the relatively short time required for their construction Although it takes longer to build a combined cycle plant than a simple gas turbine plant, a combined cycle plant can be built in much less time than a Rankine cycle plant of comparable output

One of the biggest obstacles to even greater acceptance of combined cycle plants is the fact that the gas turbines used in combined cycle plants still burn oil and gas Gas turbines built to date cannot burn coal directly Often oil and gas cost much more than coal While the combined cycle plant might be more efficient thermodynamically than a coal fired plant, the coal plant might be less expensive to run because of the lower cost for fuel

One solution to the high fuel cost for gas turbines is the development of gas turbines that can burn coal While there have been experimental gas turbines built with this capability, none have reached commercialization Another possible solution, the one being employed for the Wabash Repowering Project, is the gasification of coal During gasification the coal is converted through a chemical process to a gas commonly called syngas The gas turbine can burn syngas as easily as natural gas, and thus indirectly can use coal as a fuel

2 1 2 The Gas Turbine (Brayton) Cycle

The first major component of the combined cycle power plant is the gas turbine The gas turbine operating by itself is called a "simple cycle "

A common arrangement of a gas turbine driving an electric generator is shown in **Figure 2-1** The basic gas turbine consists of an air compressor, a combustion section, and a turbine section Air is drawn into the compressor which raises the air pressure by a factor of 14 to 16 The temperature of the air also increases with compression, and may be as high as 600°F at the compressor discharge

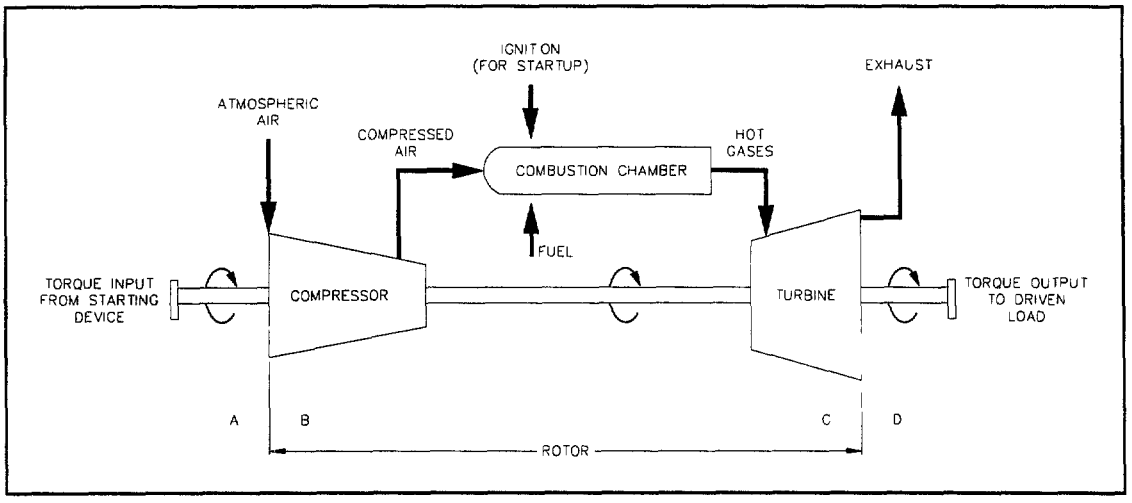

Figure 2-1 Simple Cycle Gas Turbine Configuration

One solution to the high fuel cost for gas turbines is the development of gas turbines that can burn coal While there have been experimental gas turbines built with this capability, none have reached commercialization Another possible solution, the one being employed for the Wabash Repowering Project, is the gasification of coal During gasification the coal is converted through a chemical process to a gas commonly called syngas The gas turbine can burn syngas as easily as natural gas, and thus indirectly can use coal as a fuel

2 1 2 The Gas Turbine (Brayton) Cycle

The first major component of the combined cycle power plant is the gas turbine The gas turbine operating by itself is called a "simple cycle "

A common arrangement of a gas turbine driving an electric generator is shown in **Figure 2-1** The basic gas turbine consists of an air compressor, a combustion section, and a turbine section Air is drawn into the compressor which raises the air pressure by a factor of 14 to 16 The temperature of the air also increases with compression, and may be as high as 600°F at the compressor discharge

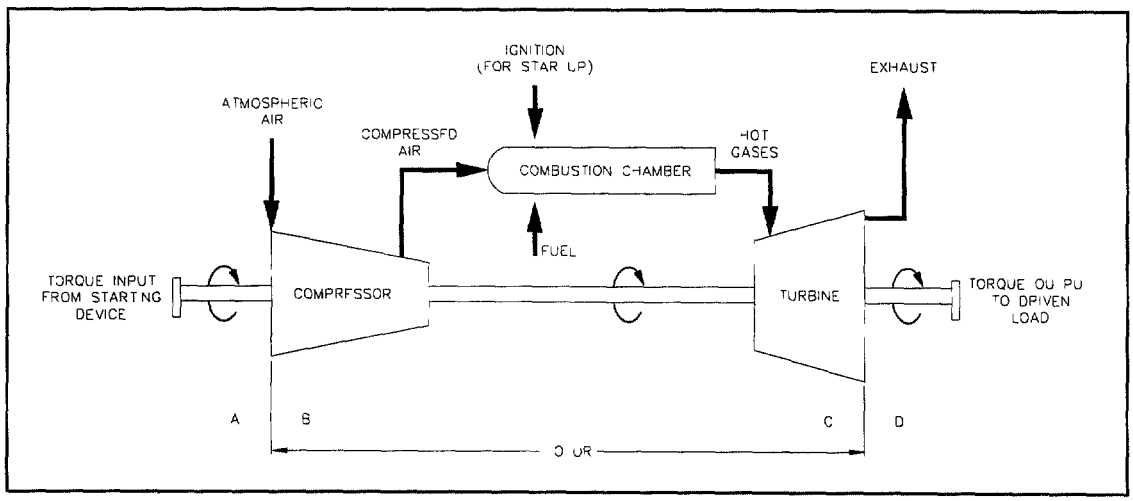

Figure 2-1 Simple Cycle Gas Turbine Configuration

In the combustion section, fuel is injected into the compressed air and burned to convert the fuel's chemical energy into heat energy Burning the fuel results in a high temperature, high pressure gas with considerable energy This hot gas enters the turbine section where it expands to a lower pressure and is cooled In the process of expanding and cooling, the heat energy in the gas is converted into mechanical energy that is used to do work

A large portion of the work from the turbine, about 60%, is used to drive the compressor The remainder of the turbine work is available to produce power by driving a generator The gas that exhausts from the turbine is at a lower temperature and pressure than the turbine inlet, but is still very hot, from 900 to 1100°F The heat in the gas is lost to the atmosphere

The gas turbine thermodynamic cycle is the Brayton cycle The four processes of the Brayton cycle are represented on a temperature-entropy (T-s) diagram shown in **Figure 2-2** The T-s diagram is a convenient way to illustrate and analyze the performance of power plant cycles including the gas turbine cycle Temperature (T) is represented on the vertical axis and entropy (s) is represented on the horizontal axis Entropy is a property of substances that describes the availability of heat energy to do work based on temperature

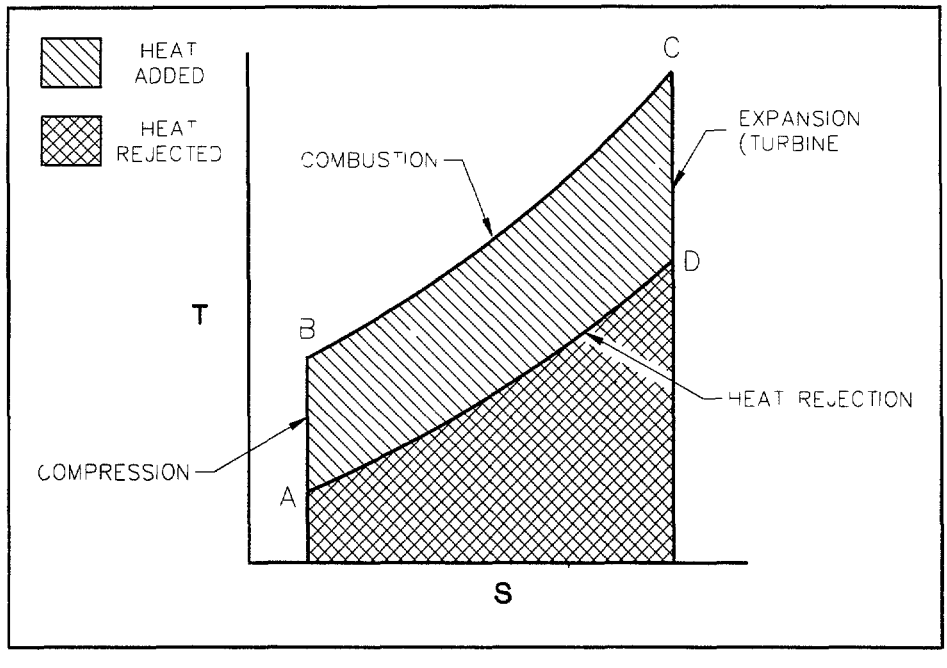

Figure 2-2 Brayton Cycle T-s Diagram

The T-s diagram is useful in analyzing thermodynamic cycles because it reveals the amount of heat required to make a process occur in a cycle If a process can be represented as a curve on the T-s diagram, the area under the curve is the amount of heat required to make that process occur

The Brayton cycle can be drawn on the T-s diagram shown in **Figure 2-2** Each process in the cycle is represented by a line in the diagram The first process is the compression of air in the compressor represented by the line AB As the air is compressed, its temperature increases The line is vertical because in the idealized Brayton cycle there is no increase in entropy, although in a real compressor there is a slight increase in entropy Work is done on the cycle to compress the air in this process

The second process is the addition of heat to the cycle at a constant pressure by burning of fuel represented by the curve BC The temperature of the gas that results from the combustion increases considerably from the temperature of the air at the compressor outlet

The third process is the expansion and cooling of the gas in the turbine, represented by the line CD As in the compressor, it is assumed that there is no increase in entropy in the turbine, although there is a slight increase in entropy in a real turbine Work is done by the cycle (the turbine) in this process

The final process in the Brayton cycle is the cooling of the hot gas that exhausts to the atmosphere, represented by the curve DA This process of heat rejection occurs at a constant pressure

The amount of heat that is required to make the Brayton cycle work is represented by the area under curve BC The fraction of heat that is rejected is represented by the area under the curve DA The area between these two curves represents the heat that is converted to useful mechanical energy The heat converted to useful mechanical energy is 20% to 25% of the total heat required to make the process work

87

To analyze simple cycle performance, data for a typical gas turbine is shown in **Figure 2-3** The figure shows the energy supplied and energy output from a typical gas turbine cycle The data shown reflects operation at 100 percent load The data is based on an ambient temperature of 59°F and site altitude of 1,700 feet above sea level Energy supplied by the fuel is 925,000,000 BTU/hr based upon 37,910 lb/hr of gas fuel with a heating value of 1000 BTU/SCF (SCF - Standard Cubic Feet) The power output of the gas turbine is 81,074 KW

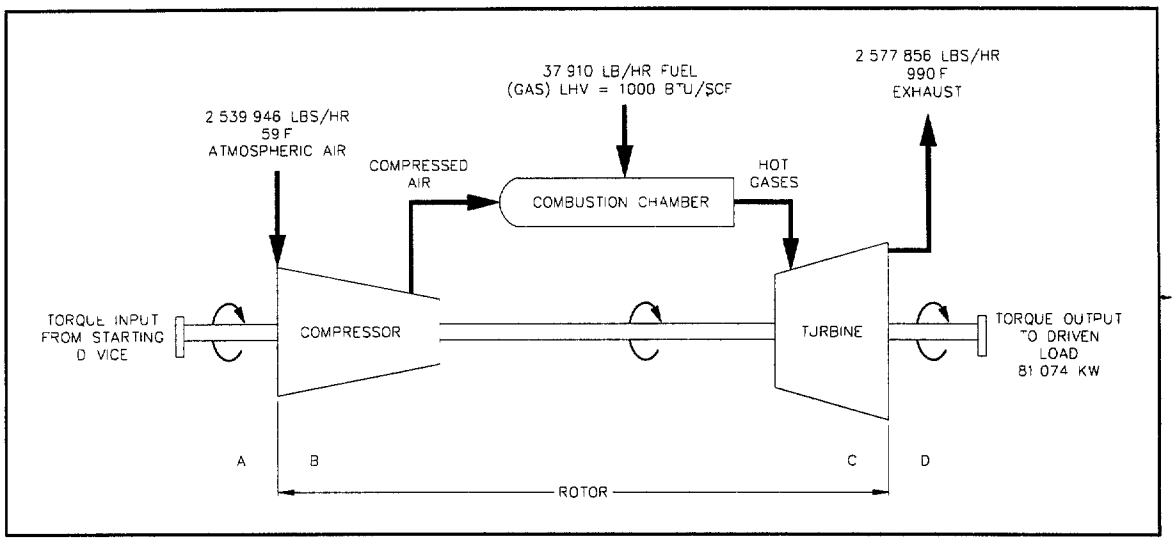

Figure 2-3 Gas Turbine Performance Analysis

Overall efficiency of the gas turbine is 29 92% The temperature of the exhaust gas is 990°F and exhaust gas flow is 2,577,856 lbs/hr Since this exhaust gas started at ambient temperature as air and fuel, considerable energy is used to heat the gas to such a high temperature

If the heat energy added to the exhaust gas was converted to electrical energy in this instance, an additional 179 MW could be generated by the cycle (over twice the electrical power actually generated) In practice, it is impossible to convert all of this heat energy into useful energy However, it is possible to recover a large fraction of the heat energy in the exhaust gas by operating the gas turbine in a combined cycle In a combined cycle plant, some of the exhaust heat energy is used in a Rankine cycle

2 1 3 The Steam-Water (Rankine) Cycle

The Rankine cycle used in conventional thermal power plants can be represented on a T-s diagram As with the Brayton cycle, each line segment in the diagram corresponds to a process in the cycle A simple Rankine cycle consists of only four components the boiler (often called a steam generator), a turbine, a condenser, and a boiler feed pump The simple Rankine cycle is shown on the T-s diagram in **Figure 2-4** Note that this boiler has a superheater, thus the temperature of the steam entering the turbine is above saturation temperature

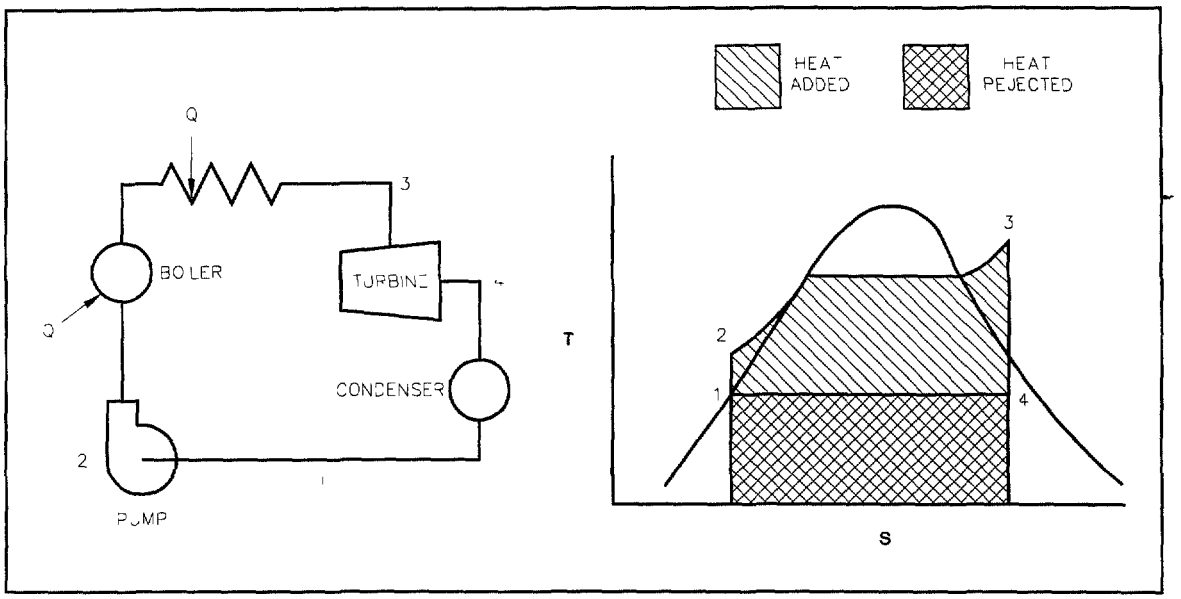

Figure 2-4 Rankine Cycle T-s Diagram

The first process in the Rankine cycle is the increase in pressure of the condensate from the condenser by the boiler feed pump The increase in pressure is assumed to occur with no increase in entropy, although in real pumps there is a slight increase The increase in pressure is represented by the vertical line 1-2

The second Rankine cycle process (represented by line 2-3) is the addition of heat (represented by Q in **Figure 2-4**) to the water entering the boiler, the conversion of the water from a liquid to a gas (steam), and the superheating of the steam This process is assumed to occur at a constant pressure The steam is then expanded and cooled as it passes through the turbine as represented by line 3-4 The third process is also idealized in that it is assumed that there is no increase in entropy

84

it passes through the turbine as represented by line 3-4 The third process is also idealized in that it is assumed that there is no increase in entropy

The last process in the Rankine cycle is the condensation of the steam that exhausts from the turbine, represented by line 4-1 In the process of condensation, considerable heat, called the heat of vaporization, is lost

The heat required to make the Rankine cycle work is determined by the area under the curve 2-3 and the heat lost from the cycle is under the curve 4-1 The area between the curves represents the heat that is converted to useful mechanical energy The useful mechanical energy is only about 1/3 of the heat required to make the cycle work

Rankine cycle performance can be analyzed by referring to the typical (simplified, idealized) power plant cycle shown in **Figure 2-5** Steam pressure at the turbine inlet is 1400 psia and temperature is 1000°F The efficiency of this idealized plant is 41 5% The efficiency of a real Rankine cycle with the same configuration would be lower than the ideal cycle

Actual Rankine cycle plants are considerably more complex than the simple cycle shown in Figure 2-4 because components such as feedwater heaters are added to improve efficiency While most of the additions to the Rankine cycle improve its efficiency, there are also factors in a real Rankine cycle that tend to make it less efficient

- Not all of the chemical energy supplied to the boiler from the fuel is absorbed by the steam Typically only 85% to 90% of the energy input is absorbed This means that the boiler is only 85% to 90% efficient

- Additional auxiliary equipment, such as fans and soot blowers, uses part of the power produced (usually around 5%)

Actual Rankine cycle efficiency is lower than that calculated for the cycle alone In practice, Rankine cycle efficiencies range from 20% to 39%

85

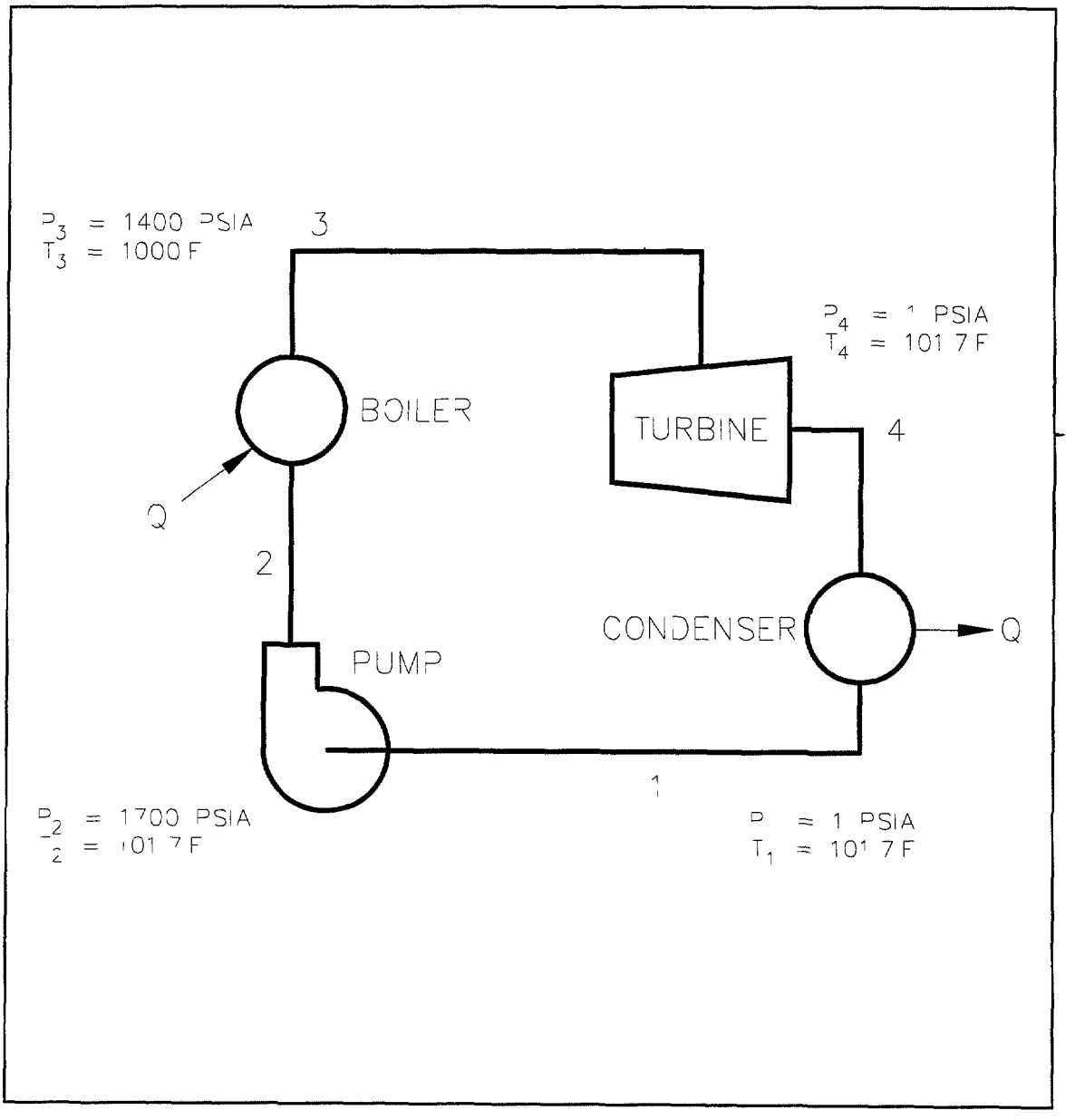

Figure 2-5 Basic Power Plant Cycle Efficiency

86

2 1 4 Heat Recovery Steam Generator (HRSG)

In the simple cycle mode of operation, the temperature of the exhaust gas leaving a gas turbine can be as high as 1100°F, and flow rates can be as high as 3 million pounds per hour High temperature gas represents a source of heat energy, some of which can be recovered if the means to do so are available By recovering some of this waste heat, the output and the efficiency of a power plant can be increased

The function of a heat recovery steam generator (HRSG) is to recover the waste heat available in these exhaust gases and transfer that waste heat to water and steam The heat recovered is used to generate steam at high pressure and high temperature The steam is then used to generate additional power in a steam turbine driven generator The HRSG provides the critical link between the gas turbine and the Rankine cycle in a combined cycle plant The HRSG is also a key component in determining combined cycle efficiency

The HRSG is basically a heat exchanger composed of a series of superheater, evaporator, and economizer sections These sections are positioned from gas inlet to gas outlet to maximize heat recovery from the gas turbine exhaust gas The heat recovered in the HRSG is used to supply steam to the steam turbine at the proper temperature and pressure

HRSG designs have evolved from simple, single pressure HRSGs to more complex arrangements Many HRSGs have multiple pressures, a reheat section, NO_x control equipment, and condensate preheating to recover as much heat from the exhaust gas as possible

The rate of heat transfer from the exhaust gas to the HRSG water depends on the temperature and pressure of the gases, the gas velocity and direction of flow over the tube surfaces, and the tube surface cleanliness The temperature and pressure of the gases are determined strictly by the design and operation of the gas turbine in most combined cycle plants Some plants, however, have supplemental fuel firing in the duct between the gas turbine exhaust and the HRSG The supplemental firing raises gas temperature and gas mass flow

The design of the HRSG for a particular application depends on many factors The cost of equipment, auxiliary power, and maintenance must be compared with expected savings A smaller unit with closely spaced tubes will cost less but will have a higher draft loss which implies a higher gas turbine exhaust pressure A larger unit will have a lower draft loss but will be more expensive Other important factors include the available space, reliability, nature of the exhaust gases, and process operating conditions

Most HRSGs are designed with multiple pressures Multiple pressures are necessary to recover as much heat from the flue gas as possible due to the nature of heat transfer from the exhaust gas to the water and steam As the flue gas travels through the HRSG heat transfer sections, its temperature falls as the gas gives up heat to the water/steam in the HRSG tubes At some point, the gas temperature falls to the same temperature as the saturation temperature of the steam/water in that section of the HRSG At this point no further heat transfer can take place When this situation occurs, the flue gas cannot be cooled further by the heat transfer section

To illustrate, if the high pressure in the HRSG is 900 psig, the saturation temperature of the steam/water in the HRSG is about 530°F The lowest value of gas temperature that will provide effective heat transfer is somewhat higher than this temperature The difference between the flue gas temperature and the saturation temperature where it leaves the high pressure heat transfer section is called the pinch point The pinch point generally has a value of 15 to 20°F Thus, if the temperature of the gas leaving the highest pressure heat transfer section were 550°F, the pinch point would be 20°F

The gas at this point in the HRSG still has considerable heat energy Much of the heat can be recovered by adding a heat transfer section to the HRSG that operates with steam at a lower pressure Since this heat transfer section operates at a lower pressure, it has a correspondingly lower saturation temperature If this lower pressure were 125 psig, the saturation temperature would be about 335°F The gas temperature could be reduced to about 360°F with a second pinch point of 25°F

More heat can be recovered from the flue gas by the addition of more heat transfer sections operating at even lower steam pressure HRSGs with as many as four different pressures have been built Often, heat transfer sections that heat condensate and feedwater are also used Such heat transfer sections are called economizers or feedwater

88

heaters Regardless of the number of pressures at which the HRSG operates and/or the types of heat transfer sections, HRSG efficiency can be maximized by reducing the temperature of the turbine exhaust gas as much as possible

There are practical limits to how much the gas temperature may be reduced The most significant of these limits results from sulphur in the fuel Sulphur appears as SO_2 (sulphur dioxide) in the gas turbine exhaust gas If the flue gas is cooled below the saturation point of the water, moisture contained in the exhaust gas condenses The condensing moisture mixes with the SO_2 in the flue gas to form sulfuric acid These acids are very corrosive and can quickly damage the HRSG The temperature at which the acids are formed is called the acid dewpoint Every effort is made in design and operation of the HRSG to assure that the flue gas is not cooled below the acid dewpoint Operation below the acid dew point can quickly result in corrosion damage to the HRSG casing and heat transfer sections

In some HRSGs, the last heat transfer sections are made of corrosion resistant stainless steel as a precaution Stainless steel is used because these heat transfer sections "see" the coolest flue gas and thus are most likely to be subject to condensation and attack by acid

If a combined cycle plant has a multipressure HRSG, the steam turbine must be designed with multiple admissions, one for each pressure Multiple admissions are necessary so the steam at the various pressures from the HRSG can be admitted to the steam turbine steam path at a point that maximizes the use of the energy in the steam

2 1 5 The Combined Cycle

Combined cycle refers to a power plant in which a gas turbine is integrated with a Rankine cycle unit The Rankine cycle makes use of much of the heat in the gas turbine exhaust gases Thermodynamically, the combined cycle can be represented by joining the high temperature Brayton cycle with the moderate pressure and temperature Rankine cycle An example of a combined cycle showing the Brayton cycle (gas turbine) and the Rankine cycle (steam turbine) on a T-s diagram is shown in **Figure 2-6** The area enclosed by the Rankine cycle is within the area that represents the heat rejected from the Brayton cycle Thus, the Rankine cycle area represents the heat energy that is converted to useful mechanical energy that would otherwise be rejected to the atmosphere

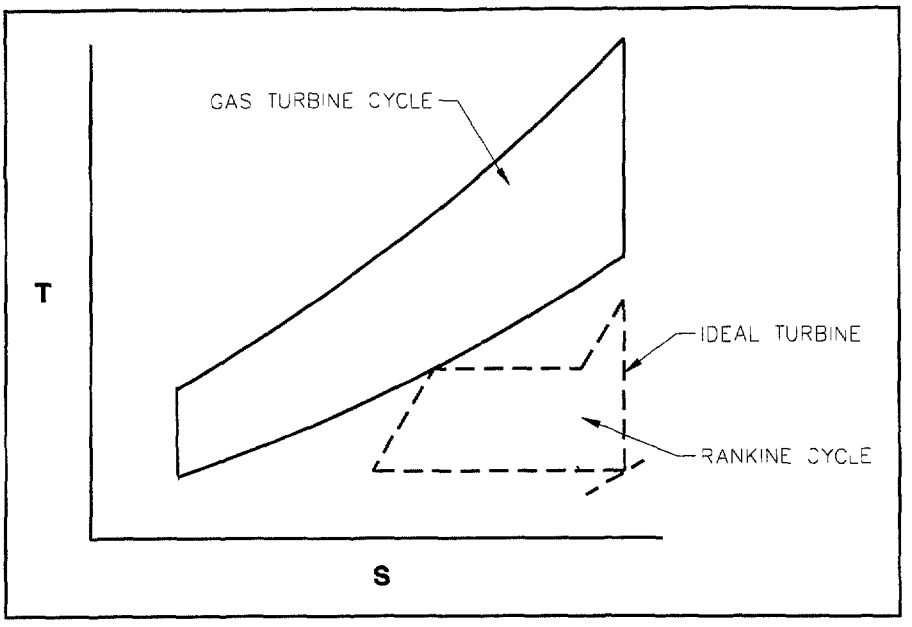

Figure 2-6 Combined Cycle T-s Diagram

A large portion of the heat lost from the Brayton cycle is used in the Rankine cycle A much greater fraction of the heat added to the cycle is actually converted to useful mechanical energy in the combined cycle than either the Brayton cycle or the Rankine cycle alone The Rankine cycle parameters (pressure and temperature) are selected to match the temperature of the available gas turbine exhaust gases Usually, the pressure and temperature used in the Rankine cycle portion of the combined cycle plant are much lower than those used in conventional Rankine cycle plants The lower pressure and temperature are necessary because the gas turbine exhaust gas, while very hot, is not nearly as hot as the flue gas entering the convection pass of a conventional fired boiler

The challenge in joining the Brayton and Rankine cycles in a combined cycle plant, is the degree of integration needed to maximize efficiency at an economic cost As shown in **Figure 2-7**, the simple combined cycle can consist of a single gas turbine, HRSG, steam turbine, condenser, and auxiliary systems In addition, if the environmental regulations require, an emissions reduction system can be directly integrated within the HRSG A variety of more complex configurations are possible

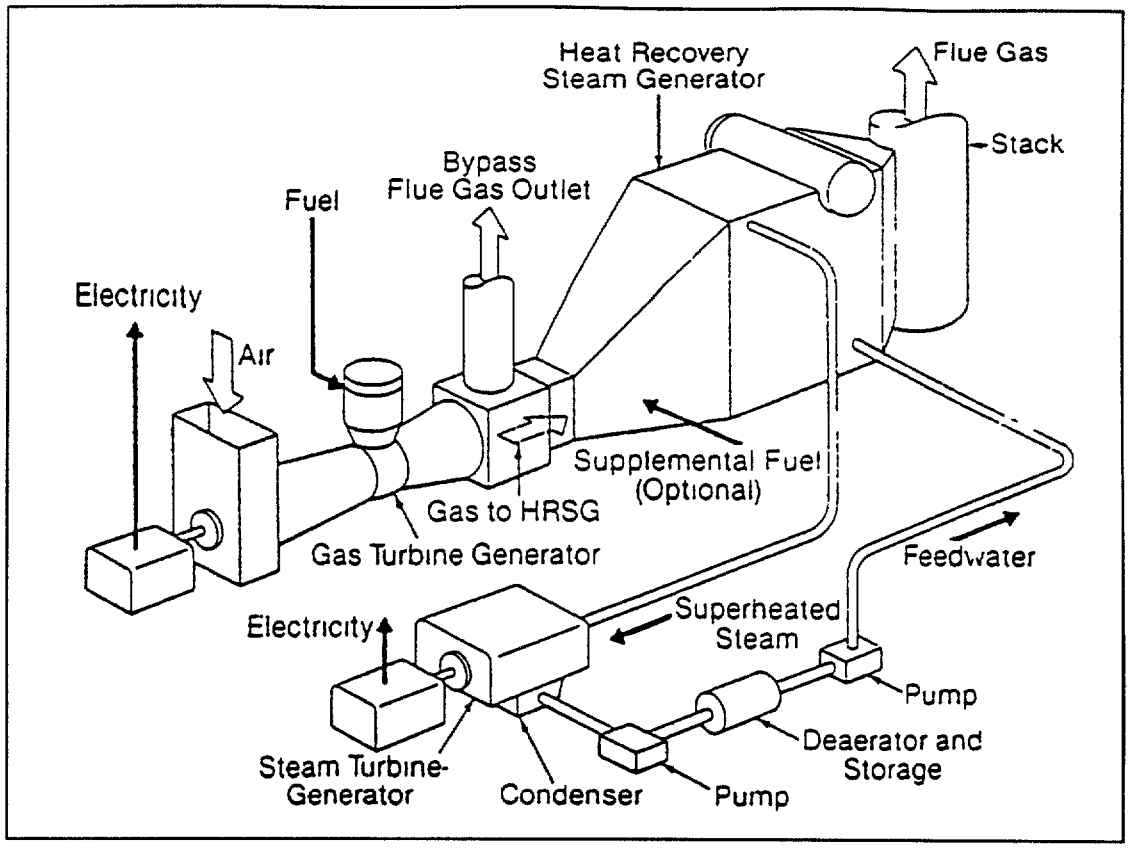

Figure 2-7 Simple Combined Cycle Schematic

2 2 Cycle Parameters and Their Impact on Plant Performance

This Section describes how some parameters of the cycles, such as pressures and temperatures, influence the efficiency of the major components and the overall plant within these ranges In order to achieve the highest overall combined cycle plant efficiency, the efficiency of both the Brayton cycle and the Rankine cycle must be compromised

2 2 1 Rankine Cycle Parameters and Efficiency

The efficiency of the Rankine cycle is influenced by the configuration of the plant and the steam/water conditions in the cycle

91

Plant Configuration

Rankine cycle plant configurations that influence efficiency include the number of feedwater heaters and the use of reheaters Feedwater heaters use steam extracted from various locations in the turbine steam path to heat condensate/feedwater as it is pumped from the condenser hotwell to the boiler The steam that is extracted is condensed The heat of vaporization given up by the condensing steam is transferred to the condensate/feedwater in the feedwater heater The heat of vaporization would otherwise be rejected in the condenser and lost to the Rankine cycle This fact is the main reason that feedwater heating improves Rankine cycle efficiency

The addition of just one feedwater heater to a Rankine cycle can result in an improvement in efficiency of as much as 10% Each additional feedwater heater that is added to the cycle increases the efficiency as well, but by a smaller increment than the heater before it

The additional cost of each feedwater heater must be justified by the savings in fuel cost expected over the life of the plant The larger the plant, the easier it is to justify many feedwater heaters Most large Rankine cycle plants have six to eight feedwater heaters Since the Rankine cycle portion of combined cycle plants is relatively small, it is common to see only one or two feedwater heaters Some combined cycle plants have no feedwater heaters that use extraction steam from the steam turbine either because they are so small or other design considerations prevent their use

Rankine cycles with reheat return the steam to the boiler to be reheated, before the steam passes through the later stages of the turbine The steam is reheated to about the same temperature as the main steam Reheating the steam increases Rankine cycle efficiency in two ways First, it is more efficient to add heat to a process in increments with small temperature differences The temperature of the cold reheat steam exhausting from the turbine is much hotter than the feedwater entering the boiler The fraction of the heat that is added to the reheat steam in the boiler is added more efficiently as compared to the heat added to the feedwater The increased efficiency results because heat is added over a smaller temperature difference in the reheater than in the economizers and evaporator sections of the HRSG Adding heat over small temperature differences is more efficient than adding heat over large temperature differences

The second way that reheating steam improves Rankine cycle efficiency is by delaying the onset of condensation in the steam turbine The steam in the turbine expands and cools as it passes though the steam turbine giving up its heat energy When the steam has cooled to the saturation temperature, droplets of moisture appear These droplets cause inefficiency because they are of a higher density and do not flow through the turbine as efficiently as steam The droplets also cause erosion of the turbine steam path Erosion of the steam path causes inefficiency because it changes the area and shape of the steam path Reheating the steam prevents it from condensing until it gets to nearly the end of the steam turbine steam path

Reheating of the steam requires a high temperature source of heat Conventional boilers have the high temperature fireball in the furnace For most combined cycle plants, the HRSG has no fireball (assuming no supplemental firing) and the temperature of the exhaust gas is relatively low As a result, most combined cycle plants do not use reheaters The Unit #1 repowering project at Wabash, however, is equipped with reheat

Operating Parameters

In general, the higher the initial pressure and temperature of the Rankine cycle, the more efficient the cycle For example, the initial pressure and temperature of most large Rankine cycle plants built over the last 20 years have been 2400 to 3600 psig and 950 to 1050°F

It is desirable to avoid condensation of the steam as it passes through the turbine The steam at the inlet must be heated far above the saturation temperature for the pressure at the turbine inlet to prevent condensation As an example, in a cycle with initial conditions of 2415 psig and 1000°F, the steam is heated 388°F above saturation and thus is said to have 388°F of superheat There must be a source of heat that is hotter than 1000°F in order to heat the steam to 1000°F In a typical boiler, the fireball (with temperatures over 2000°F) and hot flue gases (approaching 2000°F) provide that high temperature

The temperature of exhaust gas from a typical gas turbine is lower than the flue gas in a conventional fired boiler, usually 900 to 1100°F Since this temperature is relatively low compared to the conventional, fired boiler, the maximum pressure that the HRSG can have and still provide adequate superheat is lower than the fired boiler found in the conventional Rankine cycle Typical initial steam conditions for a combined cycle plant are 900 psig and 900°F Steam at this pressure and temperature has about 368°F

of superheat The relatively low pressure and temperature make the Rankine cycle portion of the combined cycle plant less efficient than the Rankine cycle in most conventional plants None the less, the use of a relatively inefficient Rankine cycle together with the gas turbine in a combined cycle makes to overall cycle efficiency higher than a conventional Rankine cycle alone

Another critical parameter that affects the efficiency of the Rankine cycle is the pressure in the condenser In general, the lower the condenser pressure (the higher the vacuum), the more efficient the Rankine cycle can be The factors that determine the condenser pressure for a given load on a Rankine cycle unit are the condition of the condenser (especially how clean the tubes are) and the temperature of the circulating water The lower the circulating water temperature, the lower the condenser pressure and thus the more efficient the Rankine cycle

The design and operating considerations for the condenser of a combined cycle plant are the same as those for a conventional Rankine cycle plant

2 2 2 Gas Turbine Parameters and Efficiency

Gas turbines (also called combustion turbines) use the Brayton cycle When the gas turbine is operating without a HRSG in a combined cycle configuration, it is said to be operating in simple cycle

A simple cycle gas turbine compresses ambient air to approximately 14 to 16 times atmospheric pressure, then produces hot, pressurized gas at 3000°F or more by burning fuel These hot gases are then expanded through a turbine The hot gas is cooled, or diluted, by excess air from the compressor to prevent damage in the turbine The turbine drives both the air compressor and the electric generator In general, the cycle efficiency of a simple gas turbine system is relatively low due to the high exhaust gas temperature and the power required to drive the compressor

As with the Rankine cycle, there are many parameters that influence the efficiency of the gas turbine Unlike the Rankine cycle, however, there are few variations in configuration of the gas turbine that have proven practical The most common arrangement is a compressor followed by a combustion section and a turbine

Operating parameters have a significant influence on gas turbine efficiency Some operating parameters are fixed by design of the turbine Parameters fixed by design have changed considerably since the post-World War 2 era as gas turbine technology has improved Other parameters vary with operation regardless of the turbine design and vintage The parameters considered in this Section are

- Compressor pressure ratio
- Turbine inlet temperature
- Exhaust pressure and temperature
- Ambient air temperature

Gas Turbine Compression Ratio

Compression ratio has the greatest influence on gas turbine efficiency This pressure ratio is affected by the compressor design and performance The relationship between compression ratio and Brayton cycle efficiency for an ideal Brayton cycle is shown in **Figure 2-8**

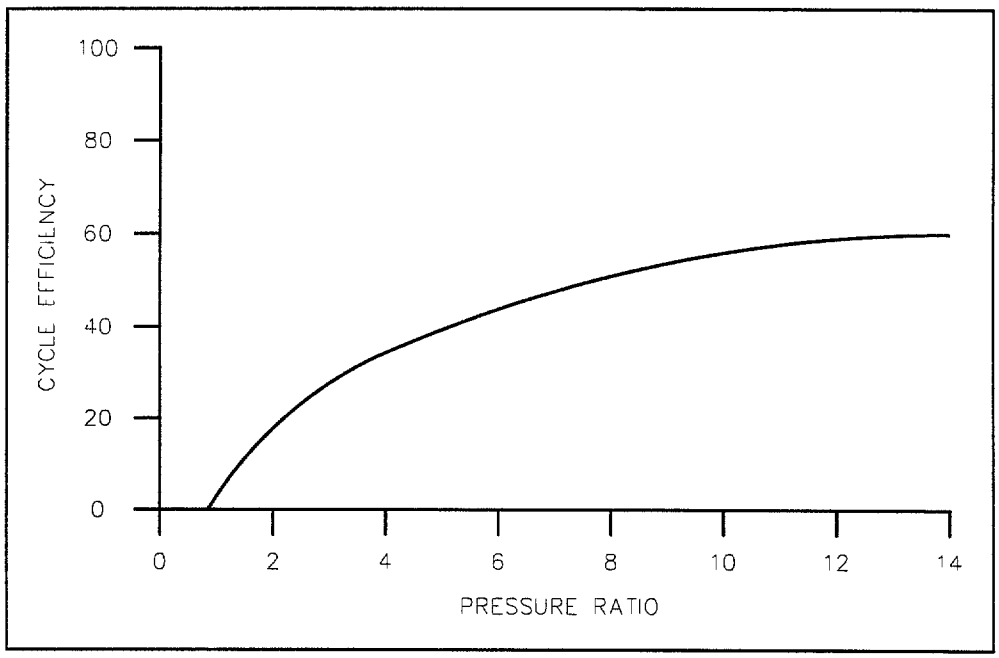

Figure 2-8 Brayton Cycle Efficiency vs Pressure Ratio

95

Early industrial gas turbines had pressure ratios of as little as 5 to 1 The latest industrial gas turbine designs employ pressure ratios of 14 to 16 to 1, while aircraft derivative gas turbines have pressure ratios as high as 22 to 1

The gas turbine compression ratio is affected by the efficiency of the compressor The compressor consumes approximately 60 percent of the power output of the gas turbine As a result, if compressor performance deteriorates, the effect on gas turbine output as well as efficiency is pronounced A one percent decrease in compressor efficiency will decrease turbine output by two percent Consequently, the condition of the compressor should be closely monitored and corrective action taken as indicated A common problem for compressors is dirty blades Corrective action in this case is cleaning the compressor without disassembly by admitting special cleaning materials to the air inlet while the gas turbine is in operation

Gas Turbine Inlet Temperature

The second most important parameter affecting the efficiency of the gas turbine is the turbine inlet temperature The turbine inlet temperature, also called the firing temperature, is the temperature of the hot gas as it leaves the combustion section and before it enters the turbine

The variation of gas turbine efficiency with turbine inlet temperature is not straightforward As the turbine inlet temperature is increased, the energy contained in the gas increases The hotter gas has more energy to do work during expansion through the turbine than it would if it were at a lower temperature As a result, higher firing temperatures can boost turbine efficiency if the turbine exhaust temperature is not increased In fact, the turbine exhaust temperature generally does increase with increased firing temperature The losses in the Brayton cycle increase as the exhaust temperature increases The increased heat loss in the exhaust gas and the inefficiency that results can be greater than the increase in turbine efficiency, thus resulting in an overall decrease in gas turbine efficiency

If the gas turbine operates in a combined cycle, an increase in exhaust temperature does not represent a loss In the combined cycle, the additional heat energy in the exhaust gas can be captured in the HRSG and used to produce steam to drive the steam turbine These higher temperature exhaust gases can be used to increase the design

96

HRSG steam pressures The increase in design pressure increases the efficiency of the Rankine cycle Thus, while higher gas turbine inlet temperatures may not benefit gas turbine efficiency, the overall efficiency of the plant may increase

Increased firing temperature has an impact upon the unit output as well as efficiency Output increases as the firing temperature increases Maximum firing temperature corresponds to maximum output Since most gas turbines used for power generation are operated to provide peaking capacity, they are most often operated in a temperature control mode that adjusts the fuel input to control firing temperature at the maximum safe limit

The limiting factor for firing temperature is the ability of the turbine hot gas components to withstand the high temperatures without dangerous loss of strength or corrosion Early industrial gas turbines had firing temperatures ranging from 1100°F to 1400°F The latest gas turbine designs have firing temperatures approaching 2400°F These higher firing temperatures have been made possible through the use of special design features in the hot gas path

The hot gas path begins in the combustion section and ends at the turbine exhaust The first several stages of the blading (both stationary and rotating) are generally constructed of high strength alloys and/or coated with special materials for corrosion and oxidation resistance Internal and external air cooling units are also required for the first few stages of blades and for stationary nozzles These blades are generally hollow to allow cooling air to flow inside Small holes in the leading and trailing edges of the blades are often employed to allow cool air to flow over the outer surface of the blades thus protecting them from the hot gases

Cooling air is typically drawn from the compressor discharge or from individual compressor stages Sometimes, an intercooler that is outside the gas turbine casing is used The external intercooler is necessary when the temperature of the air at the compressor discharge is too high to provide effective cooling of the blading and hot gas path components

The most recently built, heavy-duty industrial gas turbines operate with firing temperatures approaching 2400°F These turbines have thermal efficiency of over 35% Gas turbine designers are developing improved models that will elevate firing temperatures to the 2500 to 2600°F range These gas turbines, expected to be available in the next ten years, have a predicted simple cycle efficiency of over 40%

97

Exhaust Temperature/Pressure

The exhaust gas conditions (pressure and temperature) do not influence gas turbine efficiency in the same sense that the pressure ratio and firing temperature affect efficiency The exhaust gas conditions are determined by other factors such as the firing temperature, pressure ratio, turbine design, and the condition of the gas path In general, the lower the pressure and temperature of the exhaust, the greater the efficiency of the gas turbine

The exhaust pressure is determined by the turbine inlet pressure, the design of the turbine, and the design of the exhaust gas flowpath The gas turbine is designed to expand the gas to nearly atmospheric pressure Low turbine exhaust pressure is desirable because the lower the pressure at the turbine exhaust, the more efficient the turbine The number of stages in the turbine and the pressure drop (or expansion) experienced by the hot gas in each stage determine the pressure at the turbine exhaust

The temperature at the turbine exhaust is related to its pressure For a fixed firing temperature, the greater the expansion of the gas in the turbine (which can be measured as the pressure ratio across the turbine), the lower the gas temperature at the turbine exhaust Thus, lower exhaust pressures yield lower temperatures The pressure ratio across the turbine is slightly less than the compressor pressure ratio Thus, for a fixed firing temperature, as the compressor pressure ratio increases, the exhaust gas temperature tends to decrease

Ambient Air Temperature

Combustion turbine performance varies significantly with the pressure and temperature of the ambient air The pressure of the air is principally a function of the elevation (altitude) of the plant site, the higher the elevation, the lower the pressure Variations in pressure due to weather changes are usually so small that they are not significant Since the plant elevation is fixed, the most significant component of "site conditions" considered by plant operators is the temperature of the air which may vary over 100°F from summer to winter

Ambient air pressure and temperature affect the gas turbine efficiency because of their effect on the density of the air The gas turbine, also called a volumetric machine, has a certain capacity that is expressed in terms of volume (usually in cubic feet

98

per second) The density of air decreases as temperature increases and/or pressure decreases If the density of the air is decreased, the mass flow is reduced even if the volumetric flow rate remains constant The reduction in mass flow occurs because there is less air in each cubic foot Conversely, as the density of the air increases (which occurs as the temperature decreases and/or pressure increases), the mass flow increases When ambient air temperature drops from 59°F to 0°F, an approximate 12% increase in mass flow occurs for most gas turbines

With a greater mass flow of air into the gas turbine combustion section, more fuel can be burned and, thus, there is more heat input The increased heat input increases the output and the efficiency of the gas turbine For example, a 23% increase in turbine capability and a 5% increase in thermal efficiency occurs when the air temperature drops from 59°F to 0°F

While the previous example demonstrates that the efficiency of the gas turbine increases with increased mass flow and heat input, the percentage increase in efficiency is much less than the percentage increase in load This difference occurs because, while the predominant effect of increased air flow and heat input is increased efficiency, there are other factors which tend to decrease gas turbine efficiency at the same time For instance, when the ambient air temperature decreases below design values, the component compressor and turbine efficiencies fall slightly Also, the pressure ratio of the compressor deviates from the design value For most gas turbines, the pressure ratio increases slightly as the ambient air temperature drops The magnitude of these negative factors on efficiency is difficult to determine and so the exact effects of ambient air temperature on gas turbine efficiency are not easy to predict

2 2 3 Combined Cycle Parameters and Efficiency

The joining of the gas turbine and the Rankine cycle in the combined cycle plant requires some compromises in component efficiency in order to assure the maximum overall combined cycle plant efficiency For example, if the efficiency of the gas turbine was maximized without regard to the efficiency of the plant as a whole, the Rankine cycle portion of the plant might be adversely affected Maximizing gas turbine efficiency could result in an overall reduction of the combined cycle efficiency Similarly, if the Rankine cycle portion were modified without regard to the gas turbine, the gas turbine efficiency might decrease and lower the overall plant efficiency

Two principal issues must be considered in the combined cycle performance The first issue is the initial steam conditions in the Rankine cycle The higher the initial steam pressure and temperature, the more efficient the Rankine cycle Gas turbine exhaust temperature determines the upper limits on Rankine cycle initial conditions, the higher that temperature, the higher the Rankine cycle pressure and temperature can be Higher gas turbine exhaust temperature also benefits the Rankine cycle because the higher the temperature of the gas turbine exhaust the more thermal energy (heat) is available

High gas turbine exhaust temperature is desirable for high Rankine cycle efficiency The more efficient the gas turbine is, the lower its exhaust gas temperature Accordingly, some compromise is required between gas turbine efficiency and Rankine cycle initial conditions

Gas turbine exhaust temperature is also a concern when the gas turbine is at less than full load When the gas turbine drives a generator that is synchronized to-an electrical distribution system, the turbine speed is constant regardless of the load The compressor operates at the same constant speed and thus provides the same amount of air to the combustion section, regardless of the amount of fuel being burned The result is considerably lower firing temperatures and exhaust temperature at reduced load The reduced temperatures cause both the gas turbine and Rankine cycle efficiencies to fall as the load is reduced

In older gas turbine designs, there was no way to remedy this problem In newer gas turbine designs, air flow through the compressor can be controlled by adjustable Inlet Guide Vanes (IGVs) The control is done by changing the angle of attack of the IGVs in operation At reduced loads, the IGVs can be adjusted to produce a lower air flow and maintain exhaust temperatures at reduced load The range of load over which this method is effective is relatively small, typically from 70% to 100% of full load

The second principal issue in combined cycle efficiency is the gas turbine exhaust pressure The pressure at the gas turbine exhaust is the same as the pressure at the HRSG inlet As exhaust pressure increases, the velocity of the exhaust gas through the HRSG tube bundles also increases

Heat transfer in the HRSG is principally convective heat transfer The effectiveness of convective is a function of the velocity of the fluid As the velocity of the fluid increases, the heat transfer increases Thus HRSG efficiency improves as the

gas turbine exhaust pressure increases This is, however, the opposite of what is desirable for gas turbine efficiency

Heat transfer can be increased without increasing gas turbine exhaust pressure by adding more tubes in the HRSG which increases the heat transfer surface area The increased cost of the additional heat transfer surface area may, however, outweigh the increase in gas turbine efficiency

Figure 2-9 illustrates the relationships and tradeoffs between gas turbine pressure ratio and firing temperature for both gas turbine and combined cycle efficiency Thermal efficiency is shown on the vertical axis, while specific output in terms of MW per Pound Per Second (MW/PPS) air flow is shown on the horizontal axis For the simple cycle, increasing the pressure ratio increases gas turbine efficiency while increasing firing temperature can decrease efficiency Increasing firing temperature increases the gas turbine output

For the combined cycle, very high pressure ratios result in little increase or even a decrease in combined cycle efficiency Increases in firing temperature always result in an increase in combined cycle efficiency

Designers of combined cycle plants must compromise the efficiency of the gas turbine and the Rankine cycle, especially the HRSG, in order to optimize the performance of the combined cycle By design, the pressure ratio is limited somewhat and the exhaust pressure is slightly higher than it would be with the gas turbine operating in simple cycle This optimization has resulted in combined cycle efficiency as high as LHV? 52% Increases in gas turbine firing temperatures that are expected in the next ten years could produce combined cycle efficiencies as high as 60% LHV?

2 3 Benefits of the Combined Cycle

The demand for combined cycle power plants has increased dramatically over the last decade The principal reason for this increase in popularity is probably the fact that combined cycle plants offer the most efficient, proven technology for generating steam and/or electric power commercially available today There are other reasons for the increase in popularity however, including availability of gas and oil fuel, moderate capital cost, and short construction schedule as compared to conventional Rankine cycle plants This Section describes the benefits of combined cycle technology

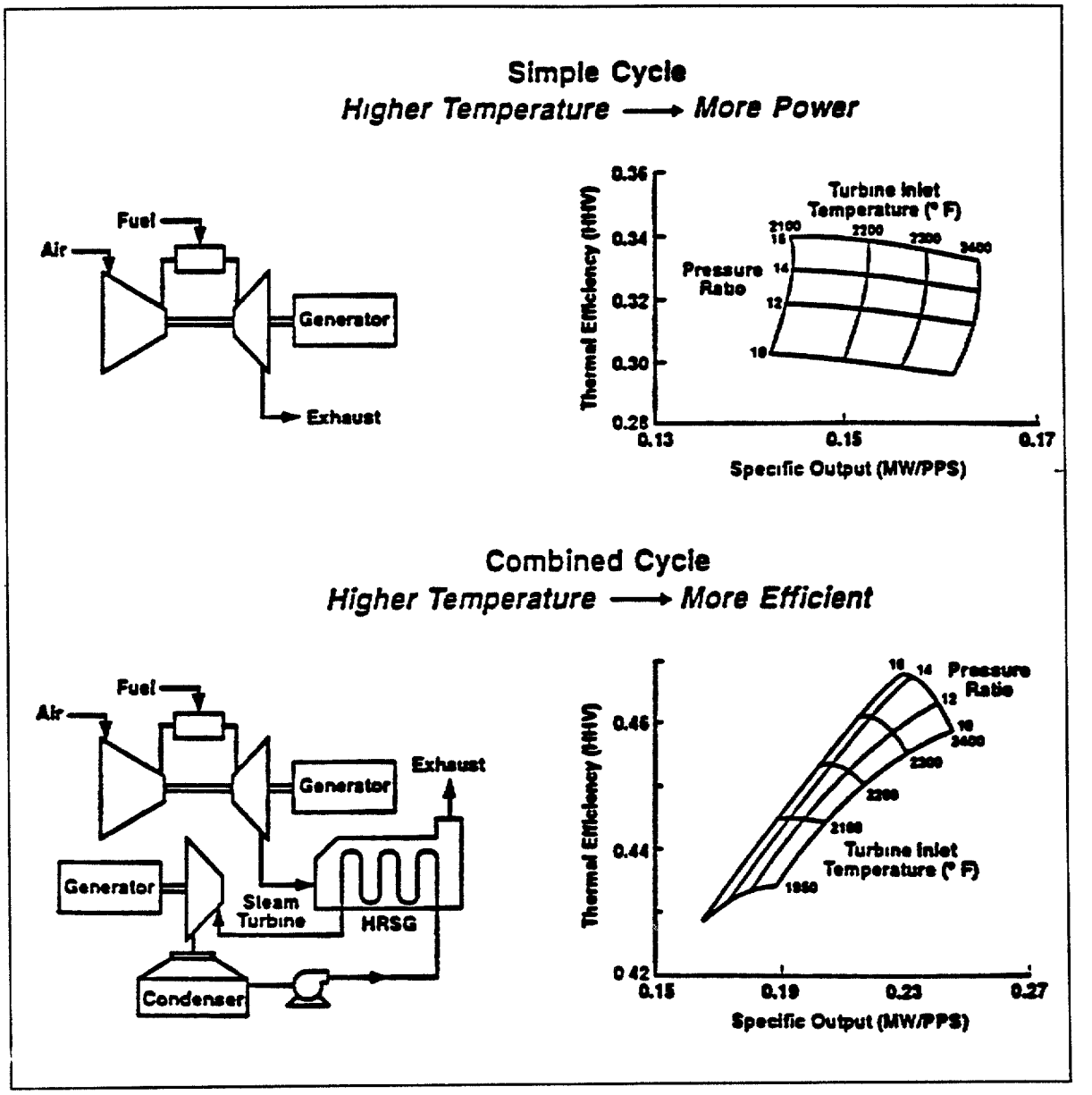

Figure 2-9 Simple and Combined Cycle Performance Plots

102

2 3 1 Operational Benefits

Many of the benefits of combined cycle technology are related directly to operational benefits Those benefits are described below

Efficiency

Recent advances in gas turbine technology have increased efficiency while maintaining high availability and reliability ratings Manufacturers, such as General Electric, have implemented design advancements in cooling and aerodynamics to boost the efficiency of their simple cycle MS7000F gas turbine to over 35% This is a significant improvement compared to the GE frame 5 units of the 1970's that had thermal efficiencies of 22 - 23% Specially developed high strength alloys and improved coatings have allowed firing temperatures to exceed 2300°F These gas turbines have simple cycle efficiencies comparable to conventional fossil-fired power plants

Other efficiency improvements have come from enhancements in the following areas

- Inlet guide vane design
- Compressor blade design
- Tighter compressor and turbine clearances
- Improved turbine nozzles, buckets, and shrouds
- Improved combustion systems
- Exhaust diffusers

Reliability

Early industrial gas turbines were relatively unreliable when compared to steam turbines in Rankine cycle plants Advanced gas turbine designs have resulted in greater reliability and higher availability Availability is a measure of reliability that is essentially the ratio of the time the machine was available to produce power to the time the unit should have been on-line Since the early seventies, gas turbine availability has increased from as low as 70% to over 90% Projected availability for newer models can be as high as 95% with 3000 hours MTBF (Mean Time Between Failures) This is better than the availability of many conventional Rankine cycle plants This improvement in reliability is

mainly due to improved materials and designed-in redundancy of critical accessory components, especially in controls Redundancy means that there is at least one back-up component to perform a function so that the failure of a single component does not result in a forced outage The GE Mark V Speedtronic controls, for instance, have triple redundancy for critical functions This allows for continued turbine operation while any one of the subsystems is undergoing maintenance or repair

Flexibility

Beyond thermal efficiency and reliability gains, combined cycle plants can offer considerable operating flexibility In many combined cycle plants, the gas turbine can be operated simple cycle or in the combined mode This feature requires the installation of a bypass stack and damper between the combustion turbine exhaust and the HRSG The damper can be positioned to direct the gas turbine exhaust gas to either the bypass stack or the HRSG Use of this damper allows the gas turbine to be placed in operation while the Rankine cycle is shut down In some plants the bypass damper can be modulated to control the flow of exhaust gas, and thus heat input, to the HRSG With no modulating bypass damper, the heat input to the HRSG is determined only by the load on the gas turbine The improved control of HRSG heat input afforded by a modulating bypass damper also improves control of steam and turbine metal temperatures, especially during startup

Flexibility can be extended through the addition of multiple gas turbines, HRSGs, and steam turbines Increased flexibility comes at the cost of greater complexity A typical example of such a configuration is a combined cycle plant with two gas turbines exhausting to a HRSG and a single condensing steam turbine/generator This example plant has bypass dampers and stacks for the gas turbines Several of the possible operating modes for the example plant are

1 One or two gas turbines operating and bypassing the HRSG

2 One or two gas turbines exhausting into the HRSG with the steam turbine on-line

3 One or two gas turbines exhausting into the HRSG with the steam turbine off-line

4 Either gas turbine exhausting into the HRSG while the other gas turbine is operated in simple cycle

The gas turbine portion of a combined cycle plant can be brought from shut down condition to full load in a matter of 10 to 20 minutes depending upon the particulars of the unit Most Rankine cycle plants require a minimum of several hours to start up and some require more than a day to start up The Rankine cycle portion of a combined cycle plant can also be started up relatively quickly with proper design – start up time related to unit size

2 3 2 Environmental Aspects

Over the past decade, growing concern for the environment has led to stricter standards regarding air emissions and industrial pollution NO_x emissions are a product of every air-fed combustion process, including those in the gas turbine NO_x emissions are suspected of contributing to several atmospheric processes that are either known or thought to be degrading to the environment Among those processes are acid rain, forest and vegetation decline, and changes to the ozone layer

Power plants are responsible for about one-third of the annual NO_x emissions Utilities have been forced to add new equipment or modify existing equipment to comply with recent regulations These additions and modifications have proven to be both expensive and time consuming

Gas turbines and combined cycle plants have proven to operate with significantly lower emissions of contaminants to the air than older Rankine cycle plants Emissions include sulphur dioxide, nitrogen oxides, and particulates Another environmental benefit of the combined cycle plant is related to its high efficiency By operating more efficiently, less fuel is burned for a given electrical output resulting in fewer combustion by-products If natural gas is fired, sulphur dioxide (SO_2) and particulate emissions are negligible Also, advances in combined cycle technology have yielded modifications in the process which reduce emissions even further Several of these modifications are listed below

<u>Steam/Water Injection</u> - Injecting steam or water into a gas turbine's combustor has proven to significantly reduce NO_x emissions Steam inside the combustion zone has a quenching effect which suppresses NO_x formation by as much as 70% Steam/water injection also increases power output, but reduces combined cycle efficiency slightly

Low NO_x Burners - Modifications in gas turbine combustors have resulted in lower NO_x emissions by adequately premixing the air and fuel upstream of the combustor and providing more stable control of fuel and air in the combustion process The low NO_x burners reduce the amount of excess air, control flame length, and reduce flame temperatures, all of which reduce the formation of NO_x

Selective Catalytic Reduction (SCR) - SCR is a process in which nitrogen oxides are removed by the injection of aqueous ammonia (NH_3) into the flue gas upstream of a catalyst structure The catalyst causes a chemical reaction that converts the nitrogen oxides to elemental nitrogen and water vapor The SCR unit, generally located within the HRSG, offers a NO_x removal efficiency of up to 90%

Selective Noncatalytic Reduction (SNCR) - SNCR is a process similar to SCR in effect but one which uses a different chemical reaction Urea and/or ammonia is injected into the flue gas to react with NO_x to form nitrogen and water This process generally occurs in the HRSG section near the flue gas outlet SNCR is less effective (about 80-85%) than SCR in NO_x removal

In addition to reduced air emissions, combined cycle power plants generally operate with less thermal pollution of cooling water sources, and reduced consumption of water and natural resources Also, the space required to build a combined cycle facility is significantly less than for conventional Rankine cycle plants All of these environmental factors are considered by Public Utilities Commissions in granting licenses to build new power plants The less the environmental impact, the more likely a license will be granted Accordingly, the difficulty and risk of completing the licensing process required for a combined cycle plant is less than that for a comparable, conventional, Rankine cycle plant

2 3 3 Repowering and Economic Aspects

Repowering is a term generally applied to the replacement of the boiler in an older Rankine cycle plant with a gas turbine and HRSG The result is a combined cycle plant with greater capacity and efficiency than the old Rankine cycle plant Repowering with advanced gas turbines and HRSGs can improve overall plant thermal efficiency by more than 20% Repowering can also triple total plant electrical capacity Repowering often has the advantage of being more economical, per cost of kilowatt generated, than other options for adding capacity

While repowering is normally thought of as the conversion of an older Rankine cycle plant, modifications can also be made to existing gas turbine plants operating in simple cycle The modification in the case involves the addition of the appropriate duct work to a new HRSG and Rankine cycle components Some gas turbine power plants are built to run in simple cycle initially and are later converted to combined cycle configuration when the economic conditions are favorable

The amount of time required to repower a plant also has a significant economic impact in power plant construction Depending upon equipment size and complexity, delivery and construction of a gas turbine can take about one year The HRSG/steam turbine cycle delivery and erection can frequently be completed in an additional year, much less time than required for construction of conventional power plants, typically at half the time Shorter construction time generally results in a significant decrease in overall cost In addition, the system capital cost is typically low as a result of smaller, standardized components, modular construction, rapid erection, and minimum support system costs

2 3 4 Combined Cycle, Cogeneration, and IPP Power Plants

Many utilities generate only electrical power There is, however, often a need in industry for process steam and/or hot water and even heated air In some cities, there are district steam heating systems for heating buildings It is common in many cities and in large industrial plants to have boilers devoted to the production of steam and/or hot water for heating or for processes involved in production of chemicals or products such as paper It is possible to build a power plant that generates electrical power and steam and/or hot water for heating and other processes Such a plant is generally called a cogeneration plant The cogeneration plant can use a Rankine cycle, a gas turbine, or even a combined cycle configuration

Cogeneration plants have an advantage in that they are generally more efficient than plants that are dedicated to production of either electric power or steam, hot water and/or heated air The overall efficiency of a cogeneration facility where waste heat is used effectively can be as much as 80%

Cogeneration plants are, however, at a disadvantage in that they often cost more than a plant that is designed to produce only electric power or steam Until 1978 there was another obstacle in the construction of cogeneration plants That difficulty was in connecting to the local utility's electrical distribution system If a plant with electrical

generation cannot connect to the local electrical system, it must operate as an electrical "island " Operation as an electrical island has many negative implications, especially lack of reliability since the local utility cannot act as a backup in the event of problems

Some reasons for difficulty in connecting to a local utility's electrical distribution system were technical in nature One example is dispatching of the system The utility dispatcher must be able to direct units in the system to increase and decrease load in response to changes in system demand Typically cogeneration plants are not under the direct control of the system dispatcher If there were many cogeneration plants connected to the system, reliable operation of the system would be much more difficult and the reliability of the entire system would be reduced There were other technical problems preventing connection of cogenerators to established utilities One of these problems was consistent protective relaying in the electrical system

Other, non-technical obstacles that prevented cogenerators from connecting to a local utility's electrical distribution system were competitive in nature If a utility were selling electrical power to a large industrial plant, and that plant decided to build a cogeneration unit to supply its own electrical power needs, the utility's market and thus its profitability would be reduced Further, if the cogeneration plant were to generate more power than required for its own needs, the utility could find itself in competition with the cogenerator

The United States government wanted to encourage cogeneration as one part of the overall response to the oil and energy crisis in the early and mid-1970's The result was the watershed Public Utility Regulatory and Policies Act (PURPA) of 1978 Essentially, PURPA requires that utilities allow cogenerators who qualify under the requirements of PURPA to connect to their system Further, the PURPA requires the utilities to buy any excess power supplied to the system at the "avoided cost " The avoided cost of producing power is the cost a utility would incur if it were to produce the power instead of the cogenerator Finally, PURPA requires that utilities not "take reprisals" against cogenerators such as withholding standby power

PURPA exempts most cogenerators from regulation as utilities, and directs utilities to set reasonable rates for buying power from and selling power to cogenerators States are required to set rates that utilities must pay cogenerators for electricity Utilities are not allowed to own more than 49% of a cogeneration plant and must negotiate in good faith with cogenerators

At the same time that cogeneration has increased, another type of plant has also become common These plants are called Independent Power Producers (IPPs) An IPP is a power plant that is, in general, designed to compete with the local utility An IPP plant may or may not produce both electrical power and heating steam and/or hot water The IPP plant does not, however, qualify under PURPA and thus is generally subject to the same regulatory requirements as the utility

It would have been very difficult for an IPP to build a plant 25 years ago Construction of IPP plants is now easier since regulatory bodies often force utilities to consider IPPs as alternatives to building new plants of their own to meet increases in electrical demand If the IPP can provide the power at a lower cost than the utility, the regulatory bodies often require the utility to allow the IPP to be built The utility must then negotiate an agreement to purchase power from the IPP Sometimes utilities have taken the initiative to negotiate deals with IPPs without regulatory prodding where it was determined to be economically advantageous to the utility

In summary, the character of the utility business has changed considerably over the last 20 years Before that time, the business was dominated by relatively few utilities Most of these utilities were regulated monopolies Today, those same utilities must compete with cogenerators and IPPs in a much more open market This newly competitive environment has forced those utilities to become innovative and develop ways to improve efficiency This competitive pressure, in part, accounts for the interest of utilities in combined cycle plants like the Wabash Unit #1 repowering project The high thermal efficiency of this combined cycle plant, combined with the use of relatively inexpensive coal as fuel, helps PSI Energy improve its competitive position in the industry

2 4 Fuels for Combined Cycle Power Plants

Gas turbines used in combined cycle power plants utilize a variety of fossil fuels The traditional approach to gas turbine fuel use was the dual fuel approach in which the gas turbine was designed to burn either gas or distillate fuel In recent years, the economics of obtaining gas turbine fuel supplies have resulted in the utilization of many fuels and in more numerous combinations Advances in technology have resulted in the utilization of less conventional types of fuel in new gas turbines

2 4 1 Gaseous Fuels

Gaseous fuels are the most commonly used fuels in combined cycle plants Gaseous fuels include natural gas, liquified petroleum gases (LPGs) such as propane and butane, and coal derived gases

Natural gas is the most widely used of all gases It is considered an ideal fuel because of good combustion characteristics, reduced air emissions, and relative ease in handling In comparison to other fossil fuels, natural gas produces little or no sulphur oxides This is an advantage over coal and oil, both of which have significant amounts of sulphur In spite of these advantages, however, natural gas is expensive in relation to other fuels and is not readily available in all parts of the United States As a result, natural gas is used much less frequently than would be expected

Natural gas is a mixture of several different hydrocarbon gases called component gases The main component gases are methane (CH_4), ethane (C_2H_6), and propane (C_3H_8) Depending on how the gas was formed, carbon dioxide, hydrogen sulfide, nitrogen, and hydrocarbon vapors may also be present These constituents are undesirable and are often removed before use

The heating value of natural gas is reported on a volumetric basis and can vary greatly Most natural gas has a heating value of about 1000 BTU per cubic foot If natural gas has a large percentage of propane and ethane, the heating value can exceed 2000 BTU per cubic foot

A typical fuel gas supply system is simple It consists of supply piping, pressure and/or flow control valves, a strainer or scrubber, and an isolation stop valve There is no fuel preparation required as with coal (pulverizers) or oil (heating and strainers) Consequently gas fuel operating complexity is less than that for oil and coal

Other fuel gases used in gas turbines include liquified petroleum gases (LPGs) which are considered "wet gases" because they can form condensibles at normal operating conditions These gases include propane and butane which are characterized by a relatively high fraction of hydrogen content Since the hydrogen forms water vapor when the gas is burned, these gases require additional fuel supply equipment to prevent condensation and the ingestion of liquid slugs by the gas turbine Piping runs for LPGs

are designed with heat tracing and low point condensate drains to accommodate the high moisture content Gaseous LPGs are heavier than air The density of LPGs requires special venting for both the fuel gas and turbine compartments in order to avoid accumulation of gas in low points or pockets that can result in an explosion

The potential for natural gas shortages and high prices has fostered the development of technologies for fueling gas turbine combined cycle systems with alternate fuels, including coke, lignite, and coal Since there are vast reserves of coal throughout the world, there is a strong incentive to develop an economical way to use coal in combined cycle plants One such method produces a fuel gas derived from coal Pressurized coal gasification produces a coal-derived gas that, after treatment and conditioning, can be burned like natural gas in combustion turbines A process like this is used for the Wabash Unit #1 repowering project

Figure 2-10 illustrates the concept of the gasification combined cycle In the process, coal is fed to a gasifier in a dry form or as a water slurry, depending on the gasifier concept The coal reacts with an oxidant (oxygen or air) and with steam to produce raw synthesis gas (syngas) The raw syngas leaves the gasifier at a temperature ranging from about 1000°F to about 2300°F The syngas then passes through a series of filtering devices which remove particulates and sulphur Following cleanup, the syngas is transported to the combined cycle fuel gas supply system, where it is used to fire the combustion turbine

Coal gasification combined cycle plants are expected to have relatively high efficiencies of up to 40 percent or more They are also "environmentally friendly" with NO_x emissions comparable to natural gas and sulphur removal in the range of 98 to 99 percent The sulphur is typically recovered in elemental form and is a marketable byproduct, as are other items such as nonleaching ash which is suitable for fill material Several disadvantages include high cost, additional equipment and space, and more complex controls systems

Add "landfill gas applications"

111

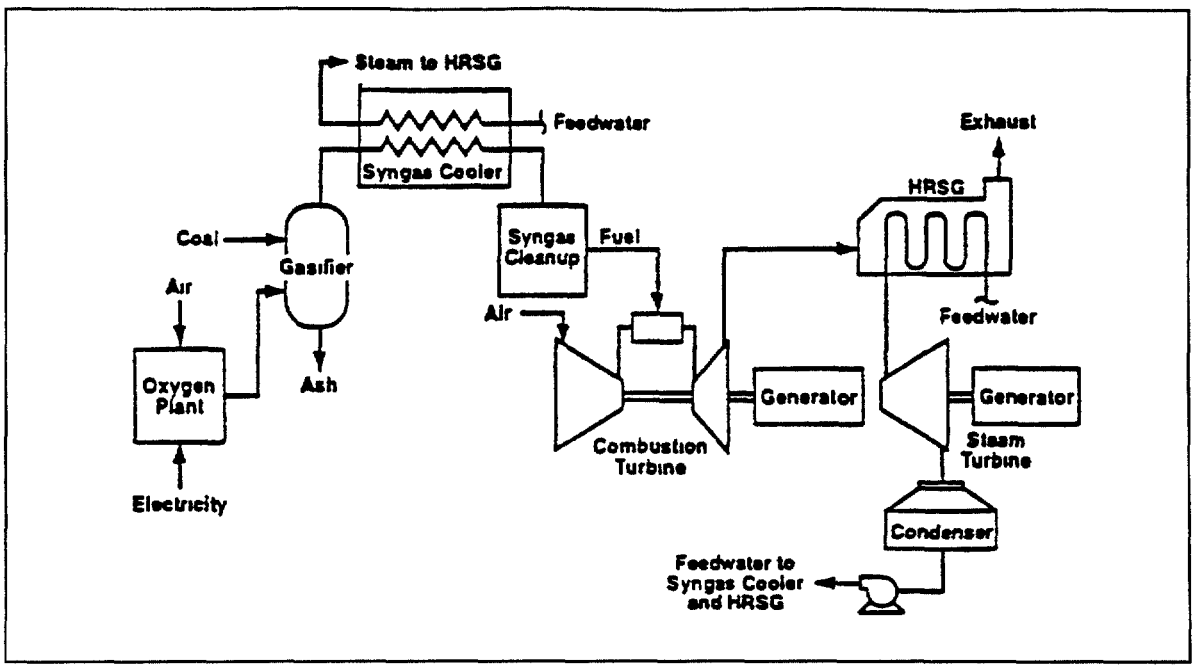

Figure 2-10 Coal Gasification

2 4 2 Liquid Fuels

Combined cycle power plants utilize a wide range of liquid hydrocarbon fuels for their combustion process These liquid fuels include

- Conventional liquid fuels (distillate, crude oils, residuals)
- Less conventional liquid fuels (jet fuels, kerosene)
- Unconventional liquid fuels (naphtha, gasolines)

All of these liquid fuels come from crude oil Crude oil is the substance that comes from the oil well or drilling site When heat is applied to crude oil, the lighter, more volatile distillate oil vaporizes and leaves the crude base The vapors are captured and condensed The condensed liquid is the distillate (No 2 oil) discussed above The product remaining is the residual Operation with crude and residual oils requires special measures to prevent high temperature corrosion and ash fouling in the turbine section Both crudes and residuals require treatment for sodium salts and vanadium contamination Fuel preparation may include filtering, heating to maintain proper viscosity for atomization, and pressurization

112

Distillate is the most commonly used liquid fuel Distillate, or No 2 fuel oil, is a light fuel oil with a heating value of about 19,580 BTU/lb This class of fuel is clean burning and is similar in manner to natural gas

Jet fuels and kerosene have been used occasionally as backup fuels where availability and economic considerations have made these fuels a more desirable choice than distillates These fuels have high heating values (over 19,000 BTU/lb) and are generally clean burning In addition to higher cost, another problem with these lighter fuels is their lubricating quality which is lower than the distillates and heavier fuels A minimum level of lubricity (a parameter that is used to describe the lubricating quality of the fuel) is desirable to provide reasonable life of the mechanical fuel system components Naphtha and natural gasolines have an even lower level of lubricity, and in addition, also have flash points that are low enough to require special handling to avoid fire and explosion

A conventional liquid fuel control system is shown in **Figure 2-11** A positive displacement fuel pump, usually a gas turbine shaft driven from the accessory gear, provides a constant flow of liquid fuel at the required pressure for injection of fuel into the gas turbine The gas turbine must be capable of operating at a wide range of loads At low loads, more fuel is pumped than is burned The excess fuel at low loads is recirculated through a controlling bypass valve to the pump suction The balance of the fuel passes into a device called the flow divider, which divides the single stream from the pump into several streams, one for each combustor on the gas turbine The flow divider is made up of individual, high volumetric efficiency gear pumps, one for each combustor The gear pumps are mechanically connected to run at the same speed, and consequently supply equal amounts of fuel to each combustor Unequal distribution of fuel can result in localized, excessive temperatures The flow divider speed is measured and used as a feedback signal to the fuel flow control system

With all liquid fuels, some type of treatment is required before the fuel enters the gas turbine combustors In the case of a true light distillate oil, treatment is required primarily to remove dirt and contaminants Filters are the most commonly used device

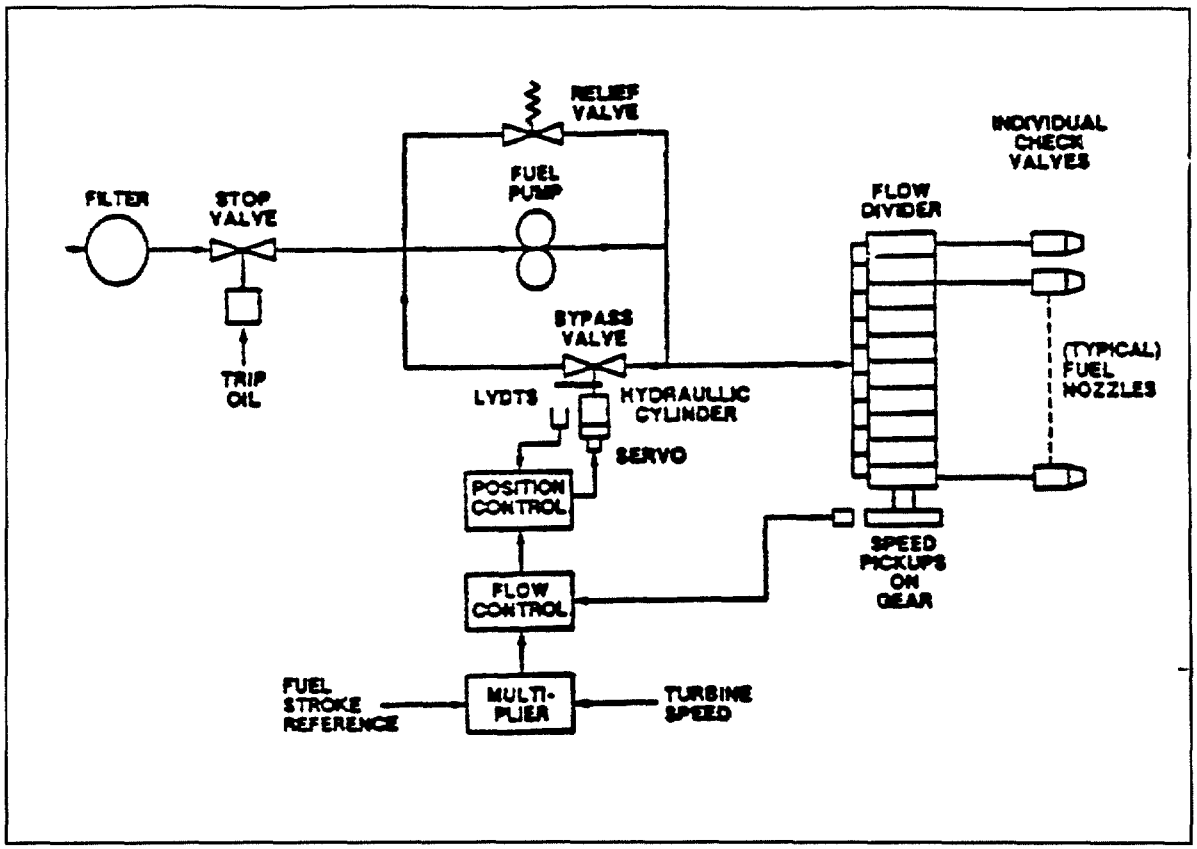

Figure 2-11 Typical Gas Turbine Fuel Oil System

Treatment and conditioning systems for crude and residual oils are more complex because of the processing steps required to remove or control their characteristic trace metal contaminants Complete fuel treatment includes

1 The fuel oil is "washed" to remove water-soluble trace metals such as sodium, potassium, and certain calcium compounds Washing involves mixing heated fuel with water and a small amount of emulsion-breaking fluid to aid in separation The fuel oil is then separated from the water by an electrostatic system or centrifugal force

2 The fuel is filtered to remove solid oxides, silicates, and related compounds

114

3 Chemicals are added to the fuel to prevent vanadium corrosion Vanadium is a corrosive element found in crude oil To inhibit the vanadium in the fuel, magnesium compounds are added in a ratio of three parts of magnesium, by weight, to each part of vanadium This form of treatment inhibits the corrosive characteristics of vanadium by forming high melting-temperature ash composed of magnesium sulfate, magnesium oxide, and magnesium vanadates

The selection of liquid fuel oils requires consideration of a wide range of properties including vanadium content, specific gravity, and viscosity The degree of the fuel treatment equipment sophistication, plant equipment investment, and operating costs required are tied directly to the physical and chemical properties of the fuel

2 4 3 Solid Fuels

The utility industry has experimented for some time with coal, lignite, and waste products such as municipal sewer sludge in order to utilize the combined cycle advantages with solid fuels Unfortunately various constituents of solid fuels reduce the life and performance of the gas turbine For example, ash formed during direct combustion can create a need for excessive gas turbine maintenance because ash causes erosion, corrosion, and ash deposition

Research continues towards the possibility of direct coal combustion for gas turbines Modifications in gas turbine combustors designed to handle coal are in the very early stages of development One such method involves the use of slagging combustors which operate at 2500 to 3000°F The combustors are designed to remove the ash and harmful constituents during the combustion process To solve the corrosion and erosion problems, a staged combustion system has been developed which utilizes the slagging combustor to partially oxidize the coal The slagging combustor is followed by various gas cleanup systems and a secondary combustor

Indirect firing of solid fuels is also a consideration for gas turbines Fluidized bed combustion (FBC) has been modified to be used in combined cycle applications Pressurized fluid bed combustion, a variation of fluid bed technology, involves the burning of coal under pressure in a fluidized bed to provide steam and pressurized flue gas

A diagram of a pressurized fluidized bed combustion process is shown in **Figure 2-12** The flue gas is filtered before expanding through the gas turbine Exhaust gas from the gas turbine can then be used to heat feedwater or generate additional steam Air from the combustion turbine compressor supports the fluidized bed of coal and sorbent (limestone or dolomite) Sorbent is a material, such as limestone or dolomite, that combines with the sulphur from the fuel in the fluidized bed and thus prevents release of sulphur dioxide in the flue gas

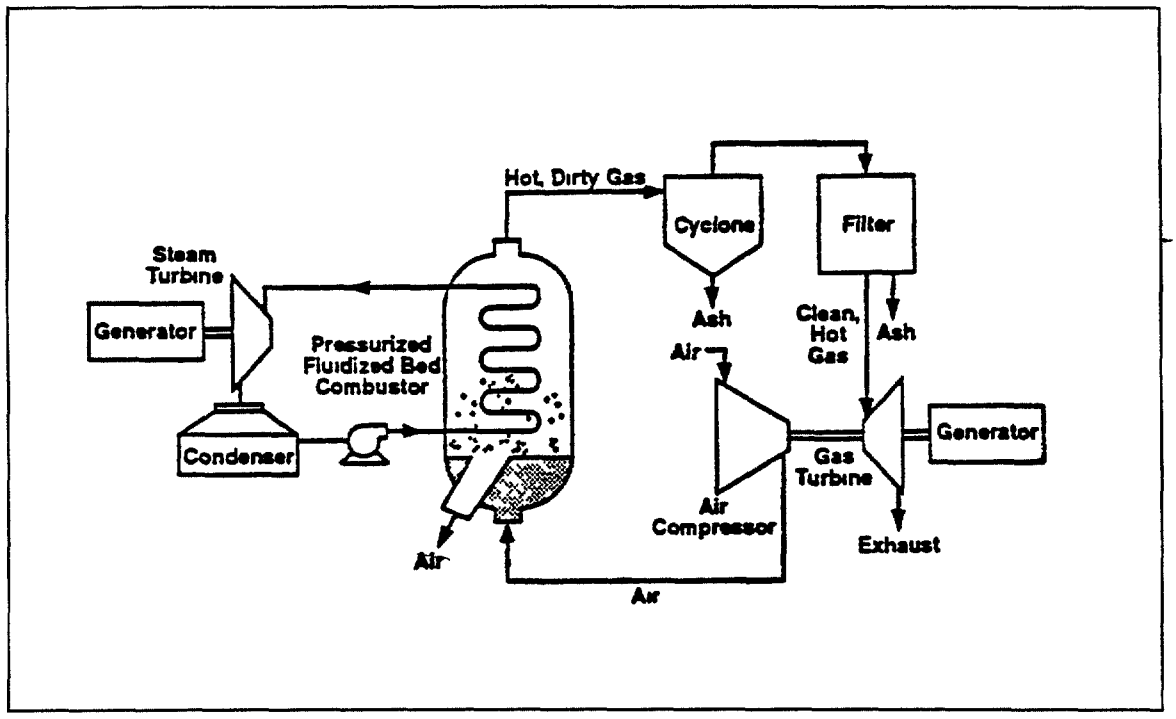

Figure 2-12 Pressurized Fluidized Bed Combustion

2 4 4 Other Considerations

Various advanced cycles which promote fuel flexibility are currently being developed as part of the Department of Energy's Clean Coal Technology Program One notable process, similar to coal gasification, involves the mixing of coal and iron in a gasifier/melter, with molten iron and fuel gas The molten iron can then be utilized in a steel mill, and the gaseous fuel burned in a gas turbine

Another concept calls for eliminating the conventional combustor on the gas turbine and replacing it with a remotely located heater, creating an Externally Fired Combined Cycle (EFCC) Heat generated by the combustion of coal is transferred to air through a ceramic heat exchanger The exhaust gas from the gas turbine is used as combustion air in the external combustor Flue gas exiting the ceramic heat exchanger passes through the HRSG and provides steam for the steam turbine In addition to coal, energy sources such as wood chips, tires, and sludge can be utilized with the ceramic heat exchanger

The combustion process in gas turbines allows a wide range of fuels to be burned However, many of these fuels have characteristics that must be accommodated in the design of the fuel control systems as well as in fuel preparation and handling systems These systems are expected to be more complex in their operation, thus the economic advantages of these systems are somewhat uncertain at this time

2 5 PSI Energy's Wabash Unit #1 Repowering Project

Figure 2-13 shows a heat balance for the Wabash Unit #1 cycle The cycle consists of one gas turbine that exhausts into one HRSG The HRSG operates at a single pressure and has a reheater This HRSG design, through relatively uncommon, is required to accommodate the design of the existing steam turbine The turbine is a single reheat turbine with no provisions for multiple admission of steam at different pressures There are three feedwater heaters and an economizer in the HRSG

The Wabash Unit #1 cycle is relatively complex compared to most other cycles since it is integrated with a coal gasification process The coal gasification process requires interchange of water and steam with the combined cycle A large fraction (about 30%) of the water supplied to the gasification process is lost Accordingly, the plant is equipped with provisions for considerable makeup (replenishment) of condensate to maintain a constant inventory of water in the cycle

Condensate from the condenser hotwell is pumped by the condensate pumps through the steam jet air ejectors and the gland steam condenser in the existing plant The condensate is then piped to the new condensate holding tank at the water treatment building The condensate holding tank also receives makeup from the demineralized water storage tank

117

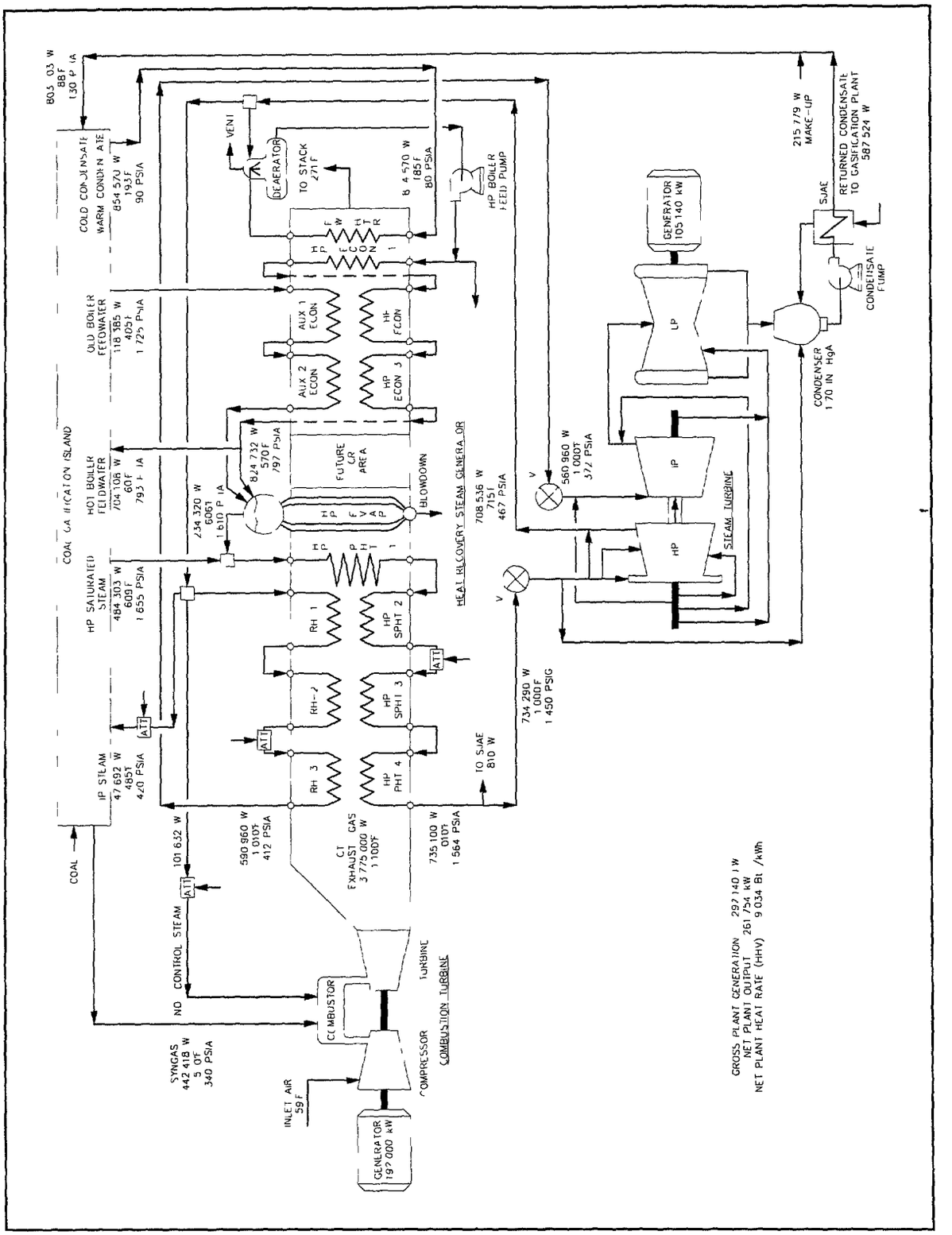

Figure 2-13 Heat Balance

118

Water from the condensate holding tank is pumped to the gasification process as cold condensate (nominal temperature about 88°F) where it is used to cool syngas The condensate is then returned to the system from the gasification process as warm condensate (about 193°F) The warm condensate passes through a feedwater heater in the HRSG to an open feedwater heater called the deaerator The deaerator uses cold reheat steam for heating Heated water from the deaerator drains into a deaerator storage tank The deaerator storage tank provides suction to the boiler feedwater pumps

The boiler feedwater pumps discharge through HP economizers 1 through 3 to heat the feedwater (to about 570°F) About 85% of the hot feedwater from the HP economizer #3 feedwater flows to the gasification process while the remaining 15% flows to the HRSG drum About 26% of the hot feedwater that goes to the gasification process is lost The rest of the feedwater is returned to the cycle, and of that feedwater, about 93% is returned as saturated steam (at about 1655 psia and 609°F) and the rest as cold feedwater (at about 405°F)

The steam from the gasification process is mixed with the steam from the HRSG evaporator and the mixture is piped to the superheater The cold feedwater from the gasification process passes through auxiliary economizers 1 and 2 and then enters the HRSG drum Steam from the HRSG drum, together with steam from the gasification process, passes through HP superheater sections 1 through 3 and leaves the HRSG at 1564 psia and 1010°F

The pressure and temperature of the steam falls as the steam flows through the long run of pipe from the HRSG to the steam turbine The pressure and temperature at the steam turbine inlet are 1465 psia and 1000°F The exhaust from the HP turbine section (cold reheat steam at about 467 psia and 715°F) is piped back to HRSG reheater sections 1 through 3 The steam leaves the reheater at about 1010°F and is cooled to about 1000°F at the intermediate pressure turbine A portion of the cold reheat steam is used for steam injection in the gas turbine for NO_x control

Hot reheat steam is admitted to the steam turbine IP section at about 1000°F through interceptor valves The steam temperature falls in the long run of piping from the HRSG to the steam turbine The steam exhausting from the LP turbine is condensed and collected in the hotwell

The gas turbine is a General Electric MS7001F with Mark V Speedtronic controls At full load, it operates with a pressure ratio of about 15 to 1 and a firing temperature of about 2300°F The primary fuel is syngas from the gasification process Steam injection (using cold reheat steam) is used to control NO_x The exhaust gas temperature is about 1093°F The gas turbine generator output is 192 MW at full load The thermal efficiency of the gas turbine alone is about 35% The gas turbine is equipped with provisions for firing oil as well as the syngas from the gasification process

The hot exhaust gas from the gas turbine passes directly to the HRSG There is no bypass stack and damper The HRSG has 9 banks of tubes Most of these tube banks have two parallel tube bundles From the inlet to the stack, these tube banks are

- Reheater #3 - HP superheater #4
- Reheater #2 - HP superheater #3
- Reheater #1 - HP superheater #2
- HP superheater #1
- HP evaporator
- HP economizer #3 - Auxiliary economizer #2
- HP economizer #2 - Auxiliary economizer #1
- HP economizer #1
- Feedwater heater

There is also a space just behind the HP evaporator that is provided for SCR NO_x removal This SCR will not be installed unless it is necessary after startup of the plant

The steam turbine is an existing 90 MW (nameplate rating, expected output is 105,140 KW), single reheat unit manufactured by Westinghouse The steam turbine will remain essentially unmodified with the exception of the controls which will be upgraded from MHC to EHC

The expected gross output of the plant is 297,140 KW This will be reduced by auxiliary power to 261,754 KW net output The expected net heat rate is 9,034 BTU/KWh which corresponds to a thermal efficiency of about 37 8%

APPENDIX A

COMBINED-CYCLE THERMODYNAMIC PRINCIPLES AND ECONOMICS

Combined-Cycle Thermodynamic Principles and Economics

The Carnot efficiency of a cycle is the maximum efficiency of an ideal thermal process The efficiencies of real thermal processes are lower since they are not ideal and have losses There are two basic losses in any cycle, the heat losses (radiation, convection, etc) and the internal losses The heat losses are easy to under stand since they are energy losses that are lost to the process The internal losses are the losses to the irreversible processes in accordance with the second law of thermodynamics Some people call these losses exergetic losses and the heat losses energetic losses

Carnot efficiency is simply the difference of the absolute temperature at which heat is added to the cycle less the absolute temperature at which heat is rejected from the cycle divided by the absolute temperature at which heat is added to the cycle and is as follows

$$\eta_C = \frac{T_A - T_R}{T_A} \qquad (1)$$

Where η_C = Carnot Efficiency

T_A = Temperature of heat addition (°R)

T_R = Temperature of heat rejection (°R)

There are two main reasons why the efficiencies of real processes are lower than the Carnot efficiency The first is that the temperature differential in the heat being supplied to the cycle is very great In a conventional Rankine cycle plant, the maximum steam temperature is only about 1000 °F while the combustion temperature in the furnace is about 3000 °F The second is that temperature of the waste heat rejected from the cycle is higher than the ambient temperature Both of these heat exchange processes produce losses in cycle

The best way to improve efficiency then is clear Raise the temperature at which heat is added and/or reduce the temperature at which heat is rejected The Rankine cycle is limited by metallurgy and the heat transfer characteristics of steam on the heat addition temperature , but rejects heat in the condenser at near atmospheric temperature The gas turbine on the other hand, adds heat to the process at a very high temperature and rejects heat at a temperature much higher than atmospheric Neither of these cycles can accomplish both of our objectives in trying to raise the heat input temperature and simultaneously reduce the heat rejection temperature by themselves However, by

combining these two cycles, one with a high heat addition temperature and the other with a low heat rejection temperature we can get closer to our goal

In an open cycle gas turbine, the process temperatures attainable are very high because the energy is supplied directly to the cycle without the use of heat exchangers The exhaust temperature however is very high In the steam cycle, the maximum process temperature is not very high, but the exhaust heat returned to the atmosphere on the cold end is at a very low temperature Combining a gas turbine and a steam turbine offers the best possible method for producing a high efficiency thermal process The comparisons are shown in Table 1

Table 1 Cycle Efficiencies

	Gas Turbine	Steam Turbine (with reheat)	Steam Turbine (without reheat)	Combined Cycle
Temperature of heat addition °F	1250-1340	690-1000	530-775	1250-1340
Temperature of heat rejection °F	440-530	115-170	115-170	115-170
Carnot Efficiency %	42-47	45-54	37-50	63-68

The Carnot efficiencies for each of the cycles indicate the efficiencies that would be achieved if there were no internal exergetic losses Although this is not possible it does provide a good idea example of the relative efficiencies of the various cycles and clearly shows the superior efficiencies that are obtained by combined cycles Even a reheat turbine cycle has a Carnot efficiency 10 to 15 percentage points less than a combined cycle The higher exergetic loss due the temperature differential when heat is exchanged between the gas turbine exhaust and the water/steam cycle is one disadvantage of the combined cycle If it were not for this fact the efficiency of the combined cycle compared to the other cycles would be even greater Even so, there is a significant advantage to be gained by installing a combined cycle plant

This may also be seen in Figure A-1 which compares the temperature/ entropy diagrams for the four cycles The combined cycle best uses the temperature differential

between heat addition and heat rejection, even though there is an additional exergetic loss between the gas and water/steam cycle

Thermal Efficiency of a Combined Cycle Plant

Combined cycle plants generally are assumed to have the total heat addition occurring in the gas turbine The more general case however, should include heat addition in the HRSG since many plants have been built with this supplemental firing capability to either increase capacity of the plant during peak periods or to supply generation when the gas turbine may be out of service Therefore the general definition of thermal efficiency for a combined cycle plant would be

$$\eta_K = \frac{P_{GT} + P_{ST}}{Q_{GT} + Q_{SF}} \qquad (2)$$

Where η_K = Combined Cycle efficiency
P_{GT} = Power output of the gas turbine (KWh)
P_{ST} = Power output of the steam turbine(KWh)
Q_{GT} = Heat input to the gas turbine (BTU/hr)
Q_{SF} = Heat input from supplemental firing (BTU/hr)

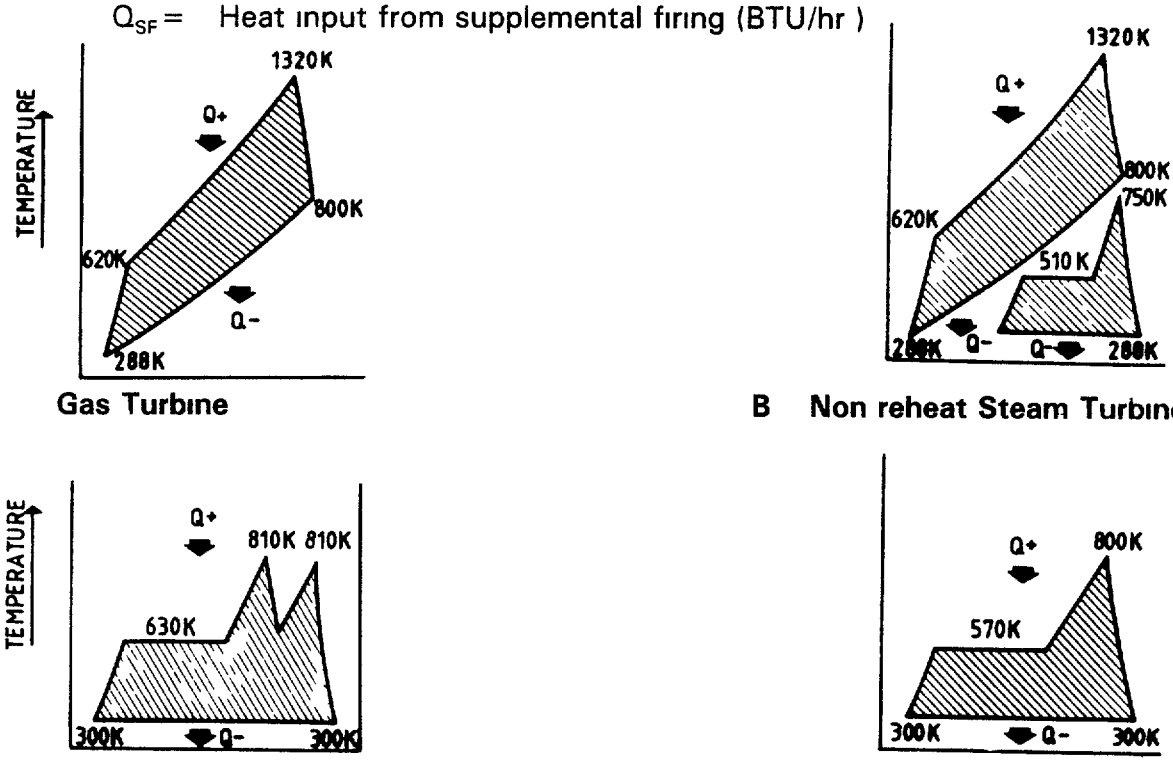

Figure A-1 Temperature Entropy Diagrams For The Four Major Power Generation Cycles

If there is no supplemental firing in the HRSG ($Q_{SF} = 0$), the formula for efficiency reduces to

$$\eta_K = \frac{P_{GT} + P_{ST}}{Q_{GT}} \tag{3}$$

In the general case, the efficiencies of the simple cycles are calculated as follows

For gas turbines

$$\eta_{GT} = \frac{P_{GT}}{Q_{GT}} \tag{4}$$

For steam turbines

$$\eta_{ST} = \frac{P_{ST}}{Q_{SF} + Q_{EXH}} \tag{5}$$

And

$$Q_{EXH} \cong Q_{GT}(1 - \eta_{GT}) \tag{6}$$

Combining these two equations produces the following equation for the steam cycle

$$\eta_{ST} = \frac{P_{ST}}{Q_{SF} + Q_{GT}(1 - \eta_{GT})} \tag{7}$$

Supplemental Firing Effect on Overall Combined Cycle Efficiency

If we calculate the overall combined cycle efficiency using the formula for steam turbine efficiency with supplemental firing just developed and the simple gas turbine efficiency we get the following result

$$\eta_K = \frac{\eta_{GT} Q_{GT} + \eta_{ST}(Q_{SF} + Q_{GT}[1 - \eta_{GT}])}{Q_{GT} + Q_{SF}} \tag{8}$$

Supplemental firing in the HRSG improves the overall efficiency of the combined cycle plant whenever

$$\frac{\partial \eta_K}{\partial Q_{SF}} > 0 \tag{9}$$

Differentiation of Equation (8) and substitution into the above inequality results in the following

$$\frac{1}{(Q_{GT}+Q_{SF})^2}[\eta_{GT}Q_{GT}(\frac{\partial \eta_{ST}}{\partial Q_{SF}}Q_{SF}+\eta_{ST})(Q_{GT}+Q_{SF})-\eta_{SF}Q_{SF}+[\frac{\partial \eta_{ST}}{\partial Q_{SF}}Q_{GT}(1-\eta_{GT})](Q_{GT}+Q_{SF})-\eta_{ST}Q_{GT}(1-\eta_{GT})]>0 \tag{10}$$

Reducing and recombining Equation (10) produces the following inequality

$$\frac{\partial \eta_{ST}}{\partial Q_{SF}}[Q_{SF}+Q_{GT}(1-\eta_{GT})]+\eta_{ST} > \frac{\eta_{GT}Q_{GT}+\eta_{ST}[Q_{SF}+Q_{GT}(1-\eta_{GT})]}{Q_{GT}+Q_{SF}} \tag{11}$$

The second term of the inequality is equal to η_K , so the inequality reduces to

$$\frac{\partial \eta_{ST}}{\partial Q_{SF}}[Q_{SF}+Q_{GT}(1-\eta_{GT})] > \eta_K - \eta_{ST} \tag{12}$$

If we substitute Equation (7) this equation simplifies to

$$\frac{\partial \eta_{ST}}{\partial Q_{SF}} \times \frac{P_{ST}}{\eta_{ST}} > \eta_K - \eta_{ST} \tag{13}$$

This equation indicates that increasing the supplemental firing improves the efficiency of the combined cycle plant only if it improves the efficiency of the steam cycle The greater the difference between the efficiency of the combined cycle and the steam cycle and the lower the temperature of the heat input to the steam cycle, the more effective the improvement will be This make supplemental firing of less interest from the standpoint of cycle efficiency improvement The efficiency of the combined cycle installation increases much more rapidly that of the steam cycle, continually increasing the difference Therefore, it is better to burn all the fuel in a modern gas turbine because the heat is supplied to the cycle at a higher temperature than it is by supplemental firing in the steam cycle

Without supplemental firing, equation (8) can be written as follows

$$\eta_K = \frac{Q_{GT} + \eta_{ST} \times Q_{GT}(1 - \eta_{GT})}{Q_{GT}} = \eta_{GT} + \eta_{ST}(1 - \eta_{GT}) \qquad \textbf{(14)}$$

Differentiation makes it possible to estimate the effect that a change in efficiency of the gas turbine has on overall efficiency as follows

$$\frac{\partial \eta_K}{\partial \eta_{GT}} = 1 + \frac{\partial \eta_{ST}}{\partial \eta_{GT}}(1 - \eta_{GT}) - \eta_{ST} \qquad \textbf{(15)}$$

Increasing the gas turbine efficiency improves the overall efficiency of the cycle only if

$$\frac{\partial \eta_K}{\partial \eta_{GT}} > 0 \qquad \textbf{(16)}$$

From Equation (15) one can obtain the following inequality

$$-\frac{\partial \eta_{ST}}{\partial \eta_{GT}} < \frac{(1 - \eta_{ST})}{(1 - \eta_{ST})} \qquad \textbf{(17)}$$

Improving the gas turbine efficiency is helpful only if it does not cause too great a drop in the efficiency of the steam cycle Table 2 show the maximum allowable reduction as a function of the gas turbine efficiency This table indicates that the higher the efficiency of the gas turbine, the greater may be the reduction in efficiency of the steam cycle

Table 2 0 Allowable Reduction in Steam Cycle Efficiency as a Function of Gas Turbine Efficiency (steam cycle efficiency = 0 25)

$\partial\eta_{GT}$	0 2	0 3	0 4
$-(\partial\eta_{ST}/\partial\eta_{GT})$	0 94	1 07	1 25

The proportions of the overall output being provided by the gas turbine increases, reducing the effect of lower efficiency in the steam cycle However, a gas turbine with a maximum efficiency still does not provide the high efficiency that a combined cycle plant does If the inlet temperature is held constant, a gas turbine with a very high pressure ratio achieves a higher efficiency than a gas turbine with a moderate pressure ratio However, the efficiency of the combined cycle plant with a gas turbine with a moderate pressure ratio is significantly more efficient because the steam turbine operates more efficiently with the higher exhaust gas temperature and produces a greater output

Figure A-2 shows the efficiency of the gas turbine alone as a function of the turbine inlet and exhaust temperatures The maximum efficiency is reached when the exhaust gas temperature are quite low (a low exhaust temperature means a high pressure ratio)

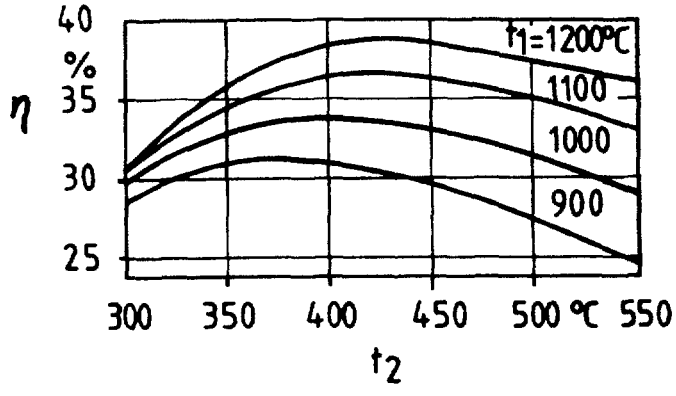

Figure A-2 Gas Turbine Efficiency as a Function of Inlet And Exhaust Gas Temperature

Figure A-3 shows the overall efficiency of the combined cycle in the same way Note that the point of optimum efficiency has shifted toward the higher gas turbine exhaust temperature Due to economics, present day gas turbines are generally optimized with respect to maximum power density and not to efficiency Fortunately, this optimum coincide fairly closely with the optimum efficiency of a combined cycle plant As a result, most of today's gas turbines are optimally suited for combined cycle installations Gar turbines with intermediate cooling in the compressor or recuperator, are less suitable for combined cycle plants They normally have low exhaust gas temperatures, so that the efficiency of the steam turbine will be low

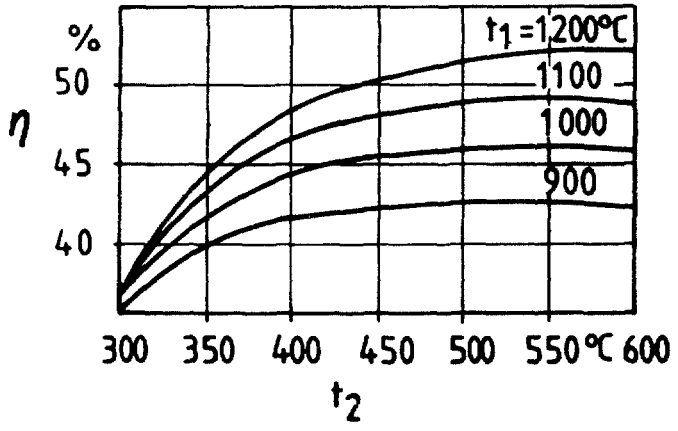

Figure A-3 Combined Cycle Efficiency as a Function of Inlet And Exhaust Gas Temperature

Two conclusions can be reached from our examination of combined cycle efficiencies They are as follows

The gas turbine with the highest efficiency does not necessarily produce the best overall combined cycle plant efficiency The turbine inlet temperature is a far more important factor

Similar considerations apply to steam turbines These however are less important since the gas turbine is generally the standard machine The exhaust heat available for steam generation is usually a given and the challenge is obtaining the maximum conversion to electrical energy

Economic Comparison of Combined Cycle Plants with Other Cycles

Thermodynamics does, indeed, play an important role in selection of the type of power plant, but it is not the only criterion for the decision Other factors as price, environmental impact, and fuel availability must also be taken into account

The main alternatives for power production cycles are steam and gas turbine power plants and that situation will not change in the near future For small to medium power outputs, however, a diesel power plant can also be a viable alternative The high efficiency of modern diesel engines is comparable to that of a combined cycle plant with the same power rating Up to a power output of 20 to 30 MW, it is possible that a diesel power plant might be the optimum choice For greater power capacities, the diesel plant loses its attractiveness because investment and maintenance costs are higher than those for a combined cycle plant, without providing greater fuel flexibility The diesel engine is also less desirable from an environmental point of view because it is more difficult to attain low emission levels with it, particularly for NOx and unburned hydrocarbons

The comparison below is restricted to the following types of power stations

- Steam turbine plants
- Gas turbine plants
- Combined cycle plants

The range of ratings under consideration is between 30 and 500 MW Combined cycle plants with a smaller power output can, of course, be built, but they are less desirable for power generation alone because their relative costs increase as the power rating decreases They are best used mainly for industrial or district heating power stations, but even for these applications, their minimum economical size is approx 10 MW

Economy

Every industrial plant strives to keep production costs as low as possible, and power plants are no exception in this regard Political factors and environmental protection legislation impose certain limits on this goal, but economy of operation remains the most important criterion when selecting what type of power plant to build

The costs for producing electricity in a power plant vary include three types of costs

- Capital costs
- Fuel costs
- Operation and administrative costs

The first of these depends on the price and the amortization rate for the plant, on interest, or on the desired yield on capital investments (annuity factor) and on the load factor of the plant, which, in turn, depends on the load, the operating time desired, and plant availability Capital costs are also influenced by the interest incurred while the plant is being built

The specific fuel costs are inversely proportional to the average efficiency of the installation This average efficiency must not, however, be confused with the thermal efficiency at rated load It is defined as follows

$$\eta_{Avg} = \eta \times \eta_{Oper} \qquad \textbf{(18)}$$

Where	η_{Avg}	=	Average efficiency
	η	=	Cycle efficiency
	η_{Oper}	=	Operating efficiency

Operating efficiency takes into account the following losses

- Start-up and shut-down losses
  Higher fuel consumption for part-load operation
- Miscellaneous heat and energy losses due to fouling, aging, operator error, etc

Operating and administrative costs include

- Fixed costs of operation and administration (staff costs, insurance, etc)
- Variable costs of operation and repair (maintenance, replacement parts, etc)

The basis used for comparisons of economy is generally a present value comparison The various costs for a power station come due at different times For that reason, when making financial calculations, they are corrected to a single reference time, which is generally the date of commercial operation These converted amounts are

referred to as present value amounts The simplified formula used to figure the present value for all expenses is

$$PV = TCR + \frac{T_{NJ} \times Y_F}{\eta_{Avg} \times \Psi} \times P + \frac{U}{\Psi} \qquad (19)$$

Where

TCR	=	Total capital requirement to be written off (Present value of all expenditures during the period of construction and commissioning, such as the price of the plant, construction interest, etc), in dollars
TNJ	=	Equivalent utilization time at rated power output, in hrs per year, TnJ = energy generated during the year, divided by the rated output
Yf	=	price of fuel, in dollars per KWhr
η_{Avg}	=	plant efficiency
Ψ	=	Annuity factor $\Psi = \frac{q-1}{1-q^{-n}}$
q	=	1 + z
z	=	interest rate
n	=	Amortization period in years
P	=	Rated power output in kW
U	=	Operating and administrative costs, including taxes and insurance, in dollars per year

The power production costs can be derived from the present value using the following formula

$$Y_{EL} = \frac{PV}{T_{NJ} \times P \times \Psi} \qquad (21)$$

Where

Y_{EL}	=	Production cost in dollars per KW
PV	=	Present value in dollars

Comparison of efficiency

At current fuel prices, thermal efficiency is the crucial factor for installations operated at medium and base load For that reason, high efficiency is a prerequisite for having an economical plant Figure A-4 shows how the thermal efficiency at rated load for the types of power plant under consideration depends on the power output Steam turbine plants have been further broken down into plants with and without reheating

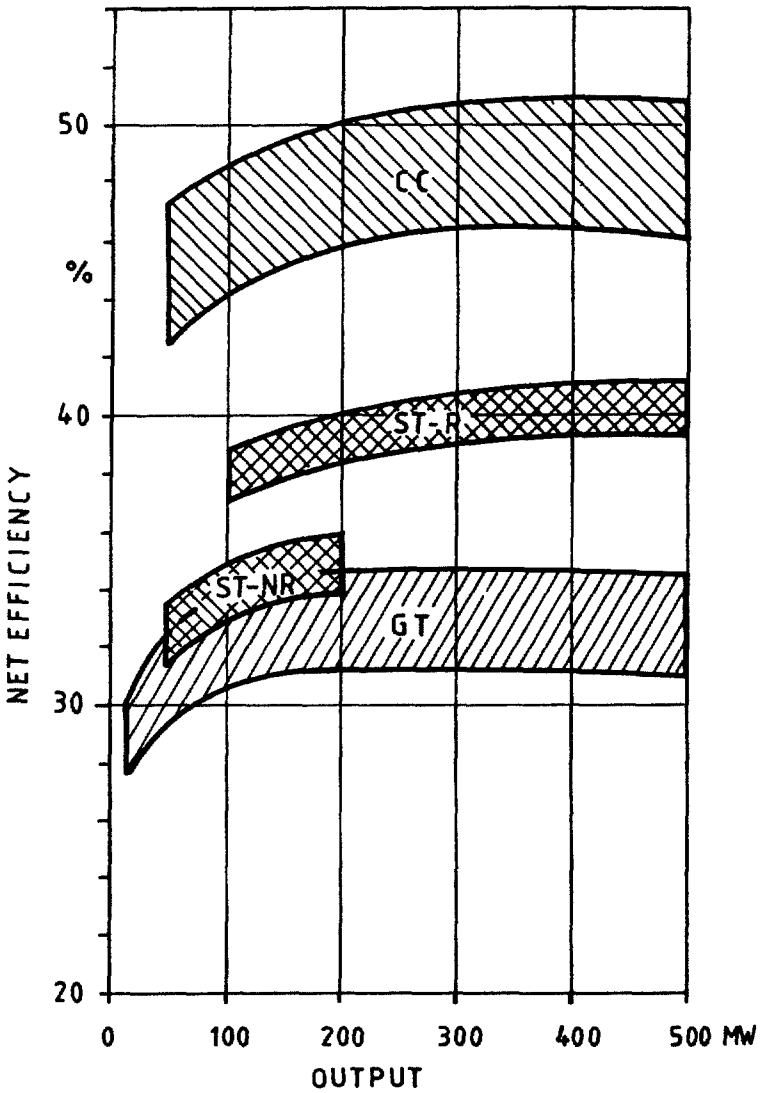

CC	Combined cycle plant
ST R	Reheat steam turbine plant
ST NR	Non reheat steam turbine plant
GT	Gas turbine power plant

Figure A-4 Comparison of Various Types of Power Plant Cycle Efficiencies

Double reheat steam plants have not been considered because they are seldom constructed Among the combined cycle plants, only those without or with only limited supplementary firing are shown

The chart makes clear the thermodynamic superiority of the combined cycle Surpassed by far are the gas turbines which, even with a high turbine inlet temperature of approximately 2012 °F, only attain an efficiency of 30% to 35%

Comparison of Price

After efficiency, price is the most important criterion for selection Figure A-5 shows how the specific investment costs for the various types of power plant depend on their power output These costs are valid for a turnkey installation including machine transformer, but not as workshop, offices, staff facilities, and the like They have been based on 1988 price levels and progress payments, and do not include interest during construction The data shown merely indicate trends appropriate caution must be taken in applying them, since very many factors affect the price of a power plant erection site, commercial risks, the political situation, impediments to construction, legal regulations, etc This diagram clearly shows the low investment costs required for the gas turbine, which have contributed significantly to its wide-spread acceptance

Steam power stations are significantly more expensive than a combined-cycle power plant A coal-burning plant, for example, costs two to three times as much as a combined cycle plant with the same power output Modern combined cycle power plants are therefore simpler and less expensive than steam power units

Nuclear power plants have not been included in this comparison because the investment costs required for them are far too dependent upon political and other local considerations

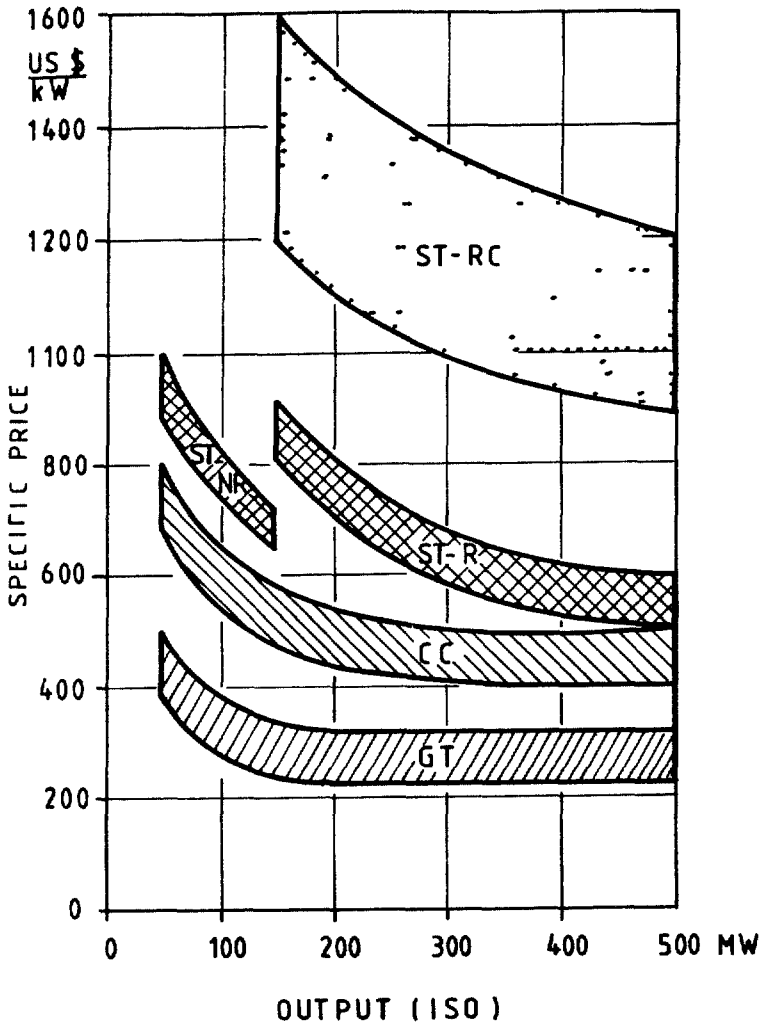

CC	Combined cycle plant
ST RC	Reheat steam turbine plant coal fired
ST R	Reheat steam turbine plant oil or gas fired
ST NR	Non reheat steam turbine plant oil or gas fired
GT	Gas turbine power plant

Figure A-5 Comparison of Various Types of Power Plant Cycle Investment Costs

Comparison of Operating and Administrative Costs

At today's fuel costs, the operating and administrative costs affect the economy of a power plant only slightly They amount only to 5 to 10% as much as the fuel costs

Because of the simplicity of the gas turbine, it is lowest in operating and maintenance costs even if it requires more spare parts than a steam turbine alone Little staff and maintenance are required A steam power plant requires more staff and its

maintenance costs are higher Combined-cycle plants fall between these two extremes units without supplementary firing are more like a gas turbine plant, and those with maximum supplementary firing more like a steam turbine power plant

Comparison of Availability

The availability of a power plant greatly affects its economy Whenever a unit is down, the electricity must either be generated in another power station or, if there is no reserve available, purchased from another electric utility In both cases, the replacement energy is more expensive than that generated by the plant itself, since capital costs are incurred whether the plant is running or not

No values for availability can be stated that will be valid for all cases since such factors as preventive maintenance and operating mode make a huge difference However, according to well-known statistics, all the plants under consideration have similar availabilities when used under the same operating conditions

Typical figures for the time availability of well-designed and maintained plants are as follows

Gas turbine plants (gas-fired)	88 - 95 %
Steam turbine plants (oil or gas-fired)	85 - 90 %
Steam turbine plants (coal-burning)	80 - 85 %
Combined-cycle plants (gas-fired)	85 - 90 %

These figures are valid for plants operated at base load, they would be lower for peaking or medium-load machines because frequent start-ups and shut-downs greatly reduce life expectancy of the machine and therefore increase the scheduled maintenance and forced outage rates,

The major factors determining plant availability are

- Design of the major components
- Engineering of the plant as a whole, especially of the interfaces between systems
- Mode of operation (base, medium, or peak load)
- Type of fuel
- Qualifications and skills of the operating and maintenance crews

Comparison of Construction Time

The time required for construction affects the economy of a unit The longer it takes, the larger the capital requirement to be written off, since construction interest, price increases for materials, insurance, and taxes during the construction period add to the price of the plant

Figure A-6 shows the amount of time required to build the various types of power plants The gas turbine, because of its standardized design, can be built with the shortest lead time, which has encouraged its widespread acceptance More time is needed to comple a combined-cycle plant

One can, however, commission the gas turbines prior to the steam plant, so that from 60 to 70% of the power output is available at the same time as a gas turbine power plant This is a great advantage over a conventional steam power plant, which can deliver power only after two to four years

Comparison of Economy

The diagrams below show the effects of the most important parameters on the economy of a power plant

1	Figures A-7 to A-9	Dependence of Cost of Power Generation on Fuel Prices, for 50, 200, and 500 MW plants
2	Figures A-10 to A-12	Dependence of Cost of Power Generation on the Equivalent Utilization Time, for 50, 200, and 500 MW plants
3	Figure A-13	Dependence of Cost of Power Generation on the Annuity Factor, for a 200 MW plant

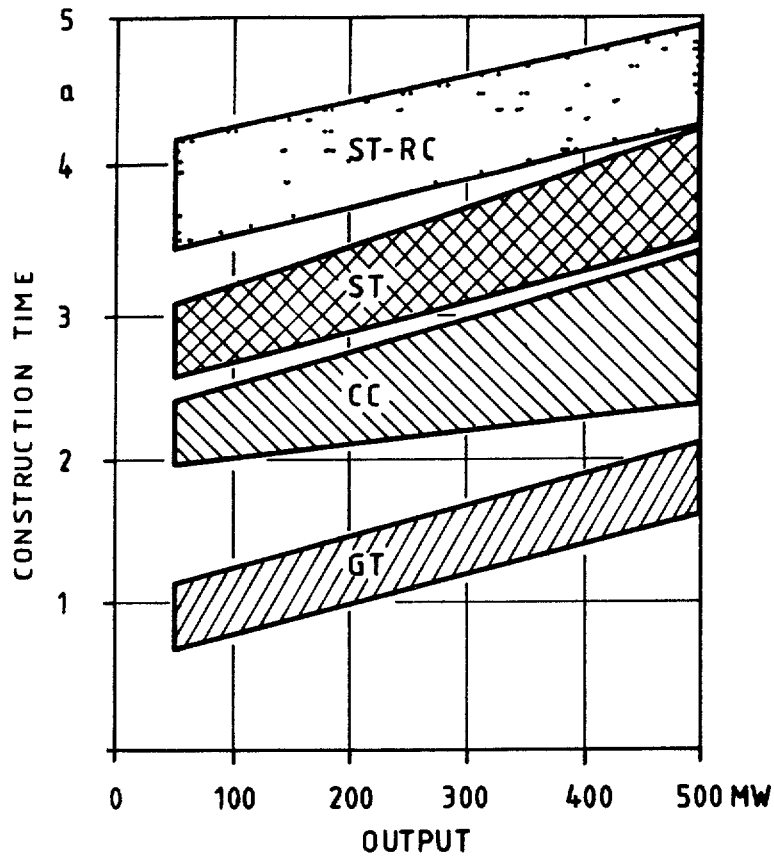

CC	Combined cycle plant
ST RC	Reheat steam turbine plant coal fired
ST	Steam turbine plant oil or gas fired
GT	Gas turbine power plant

Figure A-6 Comparison of Various Types of Power Plant Cycle Construction Times

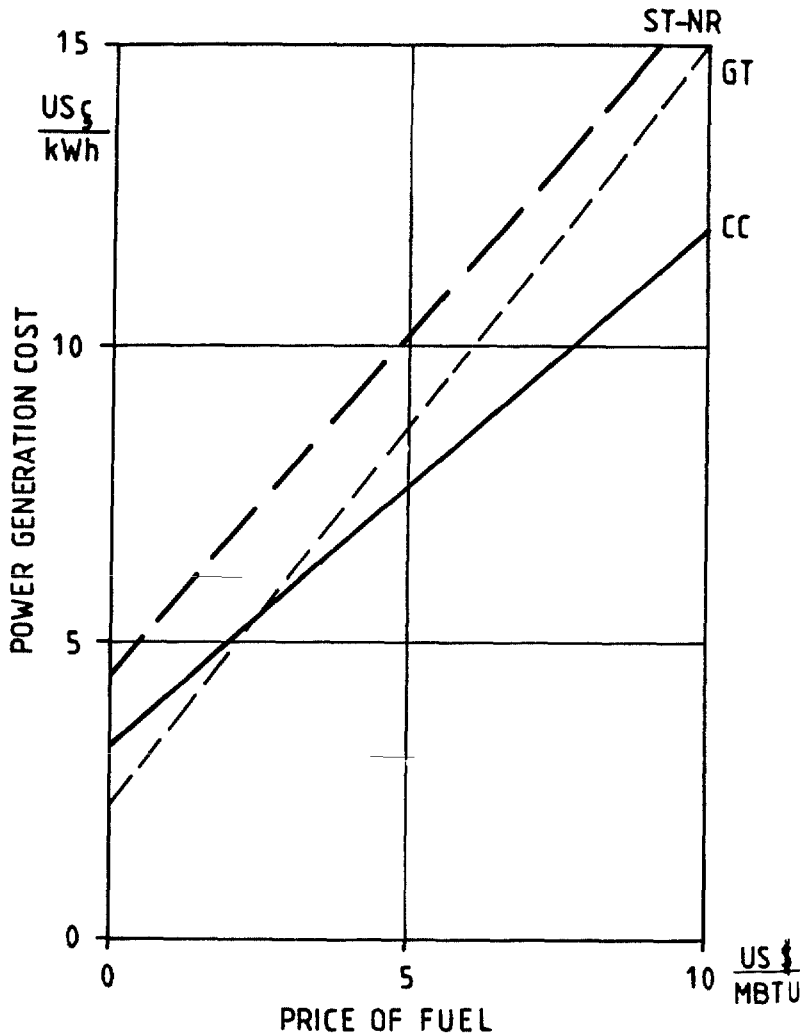

Figure A-7 Dependence of Generation Costs on Fuel Price for a 50 MW Plant

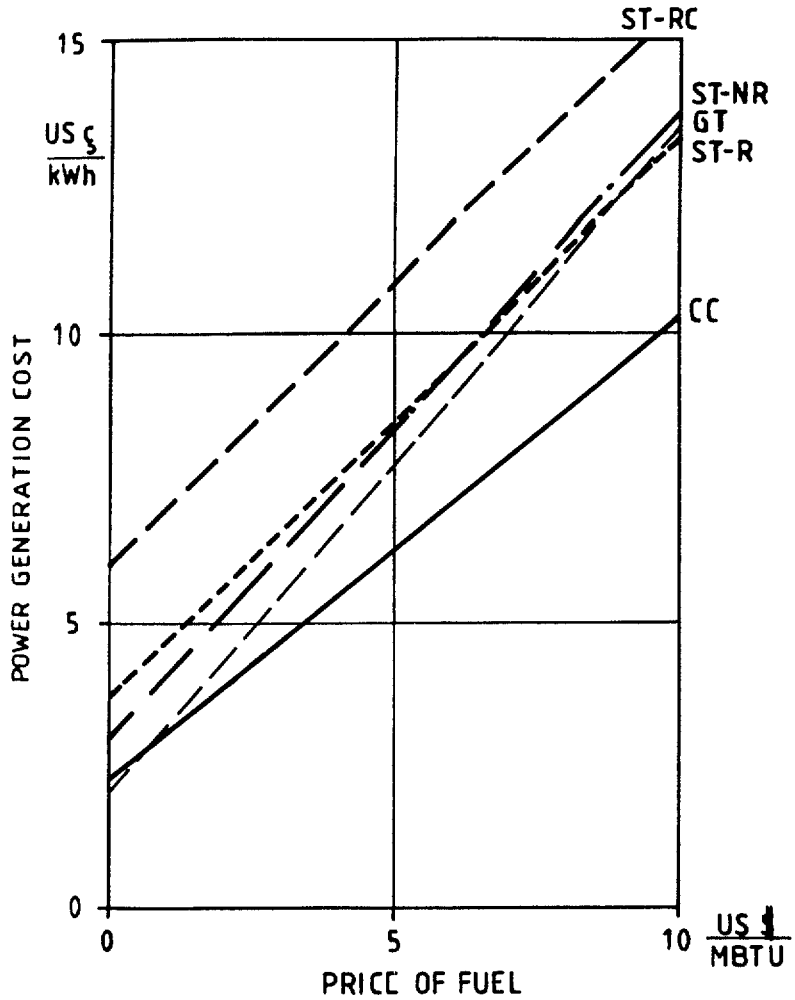

CC	Combined cycle plant
GT	Gas turbine plant
ST	Reheat steam turbine plant (oil or gas)
ST RC	Reheat steam turbine plant (coal)
Power Rating	200 MW
Annuity Factor	11%
Equivalent utilization time H	4000 hr per annum

Figure A-8 Dependence of Generation Costs on Fuel Price for a 200 MW Plant

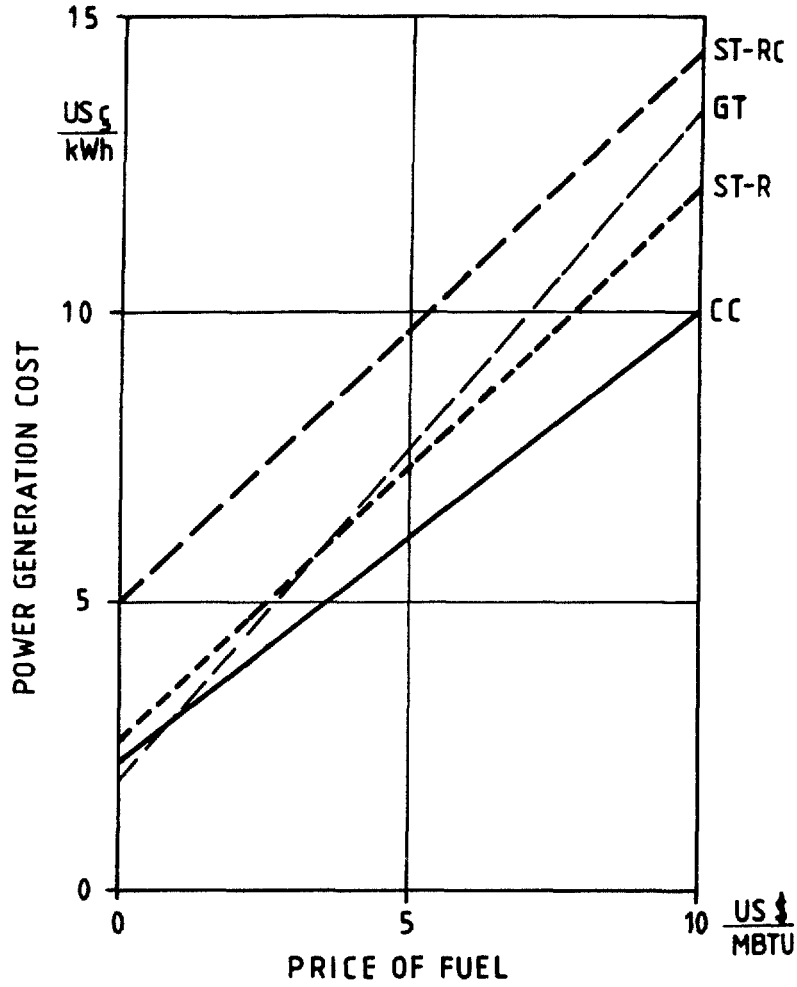

CC	Combined cycle plant
GT	Gas turbine plant
ST R	Reheat steam turbine plant (oil or gas)
ST RC	Reheat steam turbine plant (coal)
Power rating	500 MW
Annuity factor	11%
Equivalent utilization time H	4000 hr per annum

Figure A-9 Dependence of Generation Costs on Fuel Price for a MW Plant

141

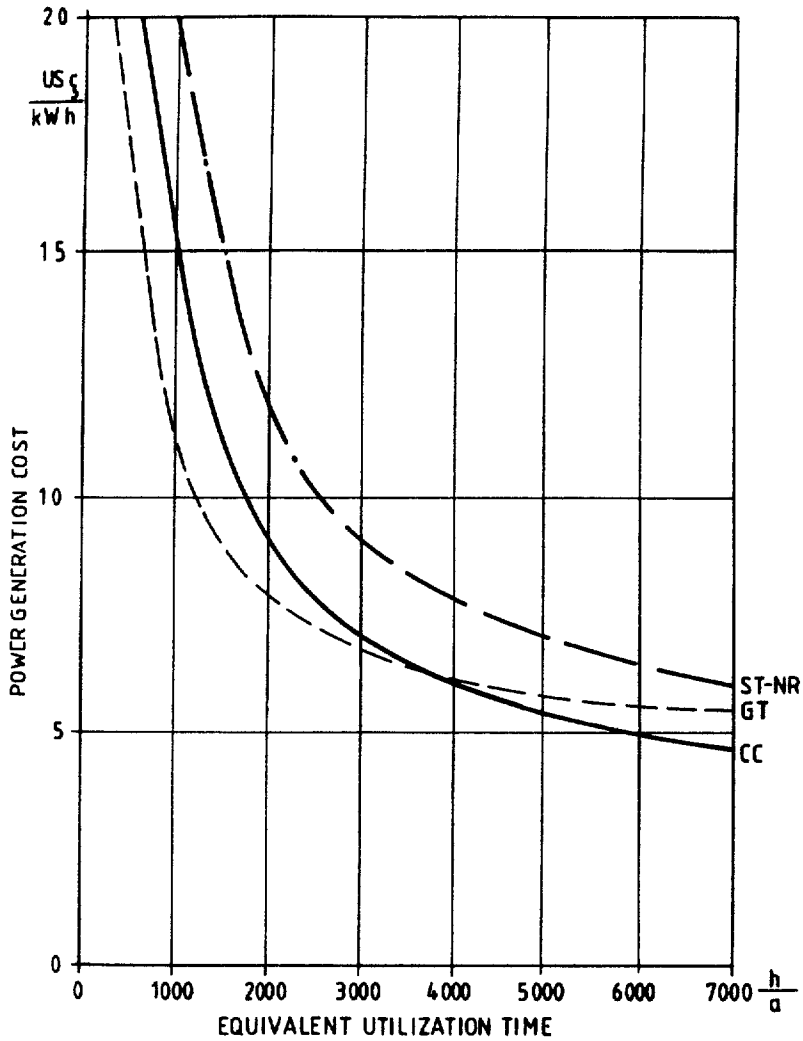

CC	Combined cycle plant
GT	Gas turbine plant
ST NR	Non reheat steam turbine plant
Power rating	50 MW
Fuel Price	US $3/10^6 Btu (LHV)
Annuity factor	11%

Figure A-10 Dependence of Generation Costs on Equivalent Utilization Time For a 50 MW Plant

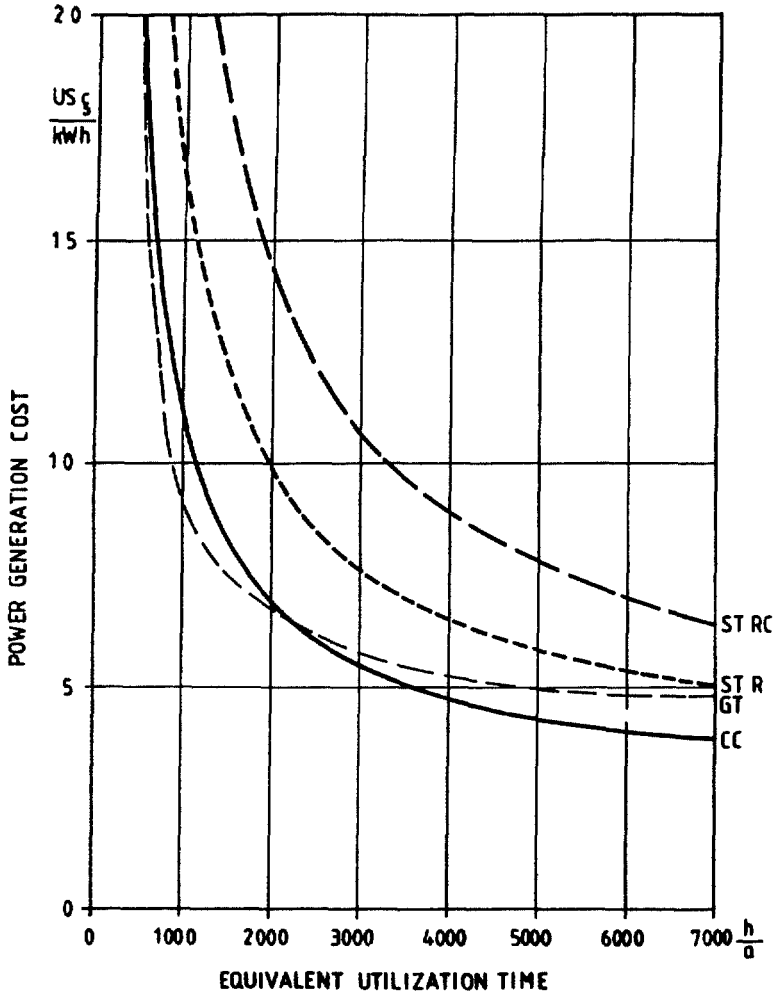

CC	Combined cycle plant
GT	Gas turbine plant
ST R	Reheat steam turbine plant (oil or gas)
ST RC	Reheat steam turbine plant (coal)
Power rating	200 MW
Fuel Price	US $3/10^6 Btu (LHV)
Annuity factor	11%

Figure A-11 Dependence of Generation Costs on Equivalent Utilization Time For a 200 MW Plant

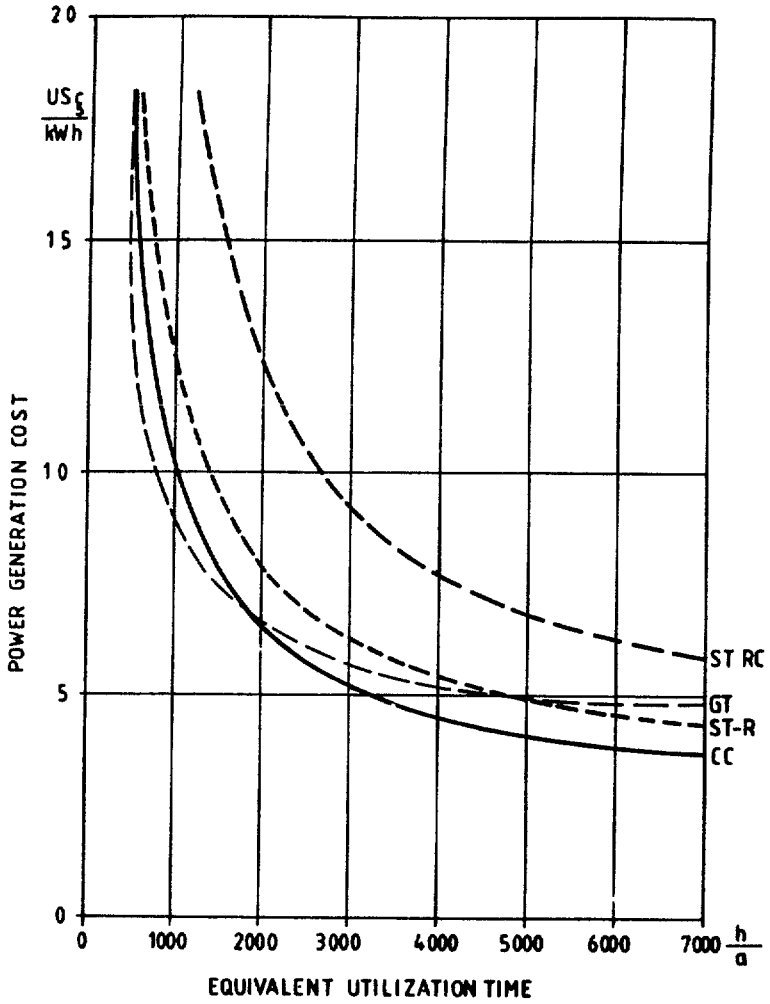

CC	Combined cycle plant
GT	Gas turbine plant
ST R	Reheat steam turbine plant (oil or gas)
ST RC	Reheat steam turbine plant (coal)
Power rating	500 MW
Fuel Price	US $3/10^6 Btu (LHV)
Annuity factor	11%

Figure A- 12 Dependence of Generation Costs on Equivalent Utilization Time For a 500 MW Plant

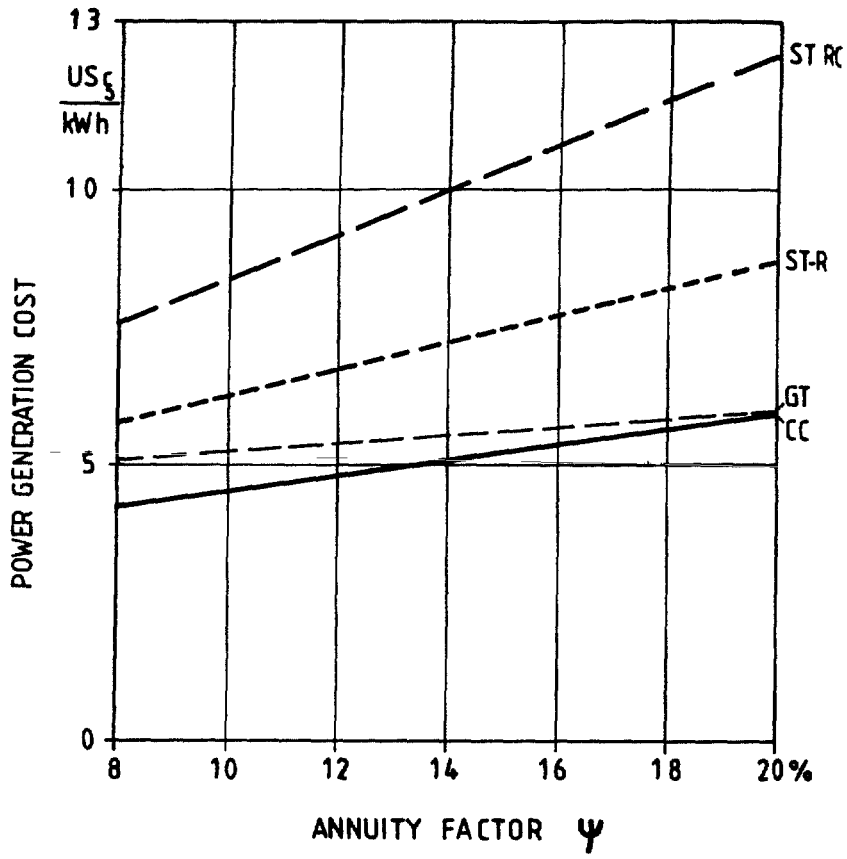

CC	Combined cycle plant
GT	Gas turbine plant
ST R	Reheat steam turbine plant (oil or gas)
ST RC	Reheat steam turbine plant (coal)
Power rating	200 MW
Fuel Price	US $3/10^6 Btu (LHV)
Equivalent utilization time H	4000 hr per annum

Figure A-13 Dependence of Generation Costs on the Annuity Factor

A combined-cycle power plant has less fuel reliability than a steam power plant The question can therefore be asked whether an oil or gas burning combined-cycle plant is more economical than a steam power station that burns a less expensive fuel, e g , coal Figure A-14 shows the difference in the price of fuel between a 200 MW

combined-cycle plant and a coal burning reheat steam power plant of the same size, as a function of the equivalent utilization time If the actual fuel price differential is above the curve, the coal fired unit produces electricity cheaper, if it is below the curve, the combined cycle is better It must be stated, however, that it is generally easier to obtain a permit to build a clean gas-fired plant or a combined cycle plant than to build a large steam turbine plant, particularly one that burns coal

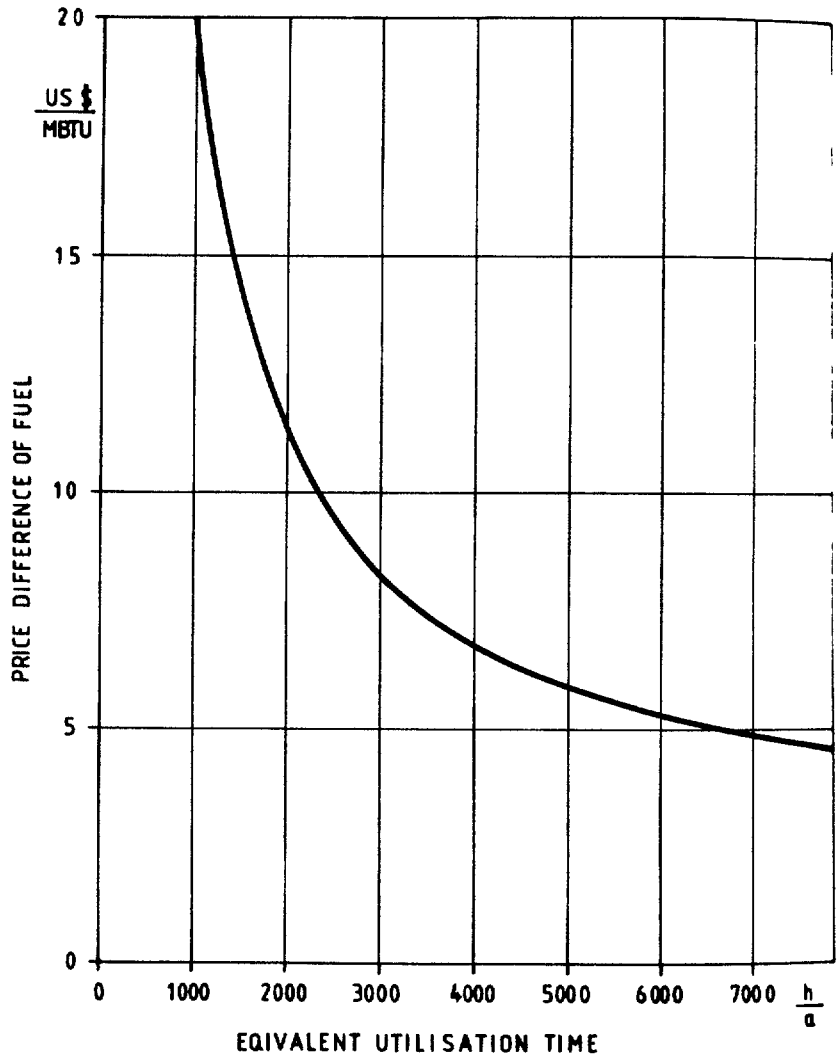

Figure A-14 Permissible Difference Between the Price of Fuel For a Combined Cycle Plant and a Steam Power Plant

The following conclusions can be drawn from these diagrams

Whenever oil or gas is being burned in a power station, the combined-cycle plant is more economical than the steam power plant

For short utilization periods (a peaking plant), the gas turbine is most economical At today's fuel prices, this limit is at about 1000 to 2000 hr per year for large plants Even when burning crude oil at a price of $20 (US) per barrel, the limit is around 1000 to 1500 hr per year

Conventional steam power plants are suitable for use as coal burning base load or possibly medium load power plants However, the price differential between the coal and the gas turbine fuel must be sufficiently great (approx $3-6 US per MBtu)

Combined cycle plants with maximum supplementary firing can be of interest if there is only a small amount of gas or oil available at favorable terms, since the rest of the fuel requirement can be covered by using coal for the supplementary firing

Fuels

The selection of the fuel and the corresponding type of power plant is determined not only by short term economic considerations but also in accordance with political criteria and assumptions about long term developments in the prices for the various possible fuels In this regard, the following aspects can become important in selecting the type of power station to be built

long-term availability of the fuel at a reasonable cost
risk of a supply shortage due to political interference, such as war, boycott, etc
political opposition to nuclear power plants
environmental protection

The result of all these factors may well be that the fuel selected is may be one other than that which appears best at the time of plant construction,

The long-term source of fuel can be taken into account only to a limited extent, by including in the calculations of economic costs an estimated price increase for the fuel

149

during the expected service life of the unit However such estimates should be handled with care In any case, the greater the fuel flexibility of the plant chosen, the less the risk from possible increases in fuel prices

Table 3 lists the fuels that can be burned in the various power plants today

Table 3 0 Various Types of Power plants and the Fuels They can Burn

	Gas Turbine	Combined-cycle without sup firing	Combined Cycle with sup firing	Steam power plant
Natural gas	Yes	Yes	Yes	Yes
Diesel oil	Yes	Yes	Yes	Yes
Crude	Yes 1)	Yes 1)	Yes 2)	Yes
Heavy oil	Yes 1)	Yes 1)	Yes 2)	Yes
Lignite	No	No	No	Yes
Bituminous coal	No	No	Yes 3)	Yes
Refuse	No	No	No	Yes
Agricultural waste	No	No	No	Yes
Blast furnace gas	Yes 4)	Yes 4)	Yes 4)	Yes
Chemical gas	Yes 4)	Yes 4)	Yes 4)	Yes
Coal gas	Yes 4)	Yes 4)	Yes 4)	Yes

1) Heavy oil or crude cannot be burned in every gas turbine Generally a fuel treatment unit is required

2) Note 1) applies to the gas turbine In the supplementary firing, however, heavy oil can be burned just as well as in a conventional steam generator

3) To be used only in the supplementary firing

4) These fuels can generally be used as gas turbine fuels However, adaptations on the machine are required if the heat value is low

The fuel flexibility of combined-cycle plants is less than that of steam power plants Some gas turbines can burn heavy or crude, provided the machine is designed to do so Industrial gas turbines are more suitable than those derived from jet technology It is easier to burn special fuels in gas turbines with large combustors than in those with several smaller combustors or an annular combustor, since the latter are more sensitive to changes in flame length, radiation, etc

A second requirement for burning heavy oil or crude in a gas turbine is the correct treatment of the fuel, generally by means of washing and dosing with additives These steps make it possible to remove or inhibit elements that cause high temperature corrosion, such as vanadium, sodium, etc

APPENDIX B

COMBINED-CYCLE DEVELOPMENTS

Combined Cycle Developments

There are currently three major trends that are occurring in combined cycle applications These are as follows

1 Increased gas turbine efficiency and power output
2 Coal gasification for combined cycle applications
3 Dry, low NO_x burners for lower NO_x emissions

Increased efficiency and output is a continuation of the development trend that has lead to the increased popularity of gas turbines and combined cycle plants for new and repowered power plants in recent years Although the concept of using fuels other than gas or oil for gas turbines and combined cycle plants is not new, development now is focused primarily on the use of coal, since it is readily available and usually inexpensive Much work has been done and demonstration plants have been built, to test and refine the Integrated Coal Gasification Combined Cycle (IGCC) Development of Pressurized Fluidized Bed Combustor (PFBC) plants has also advanced to the point where they also may be considered as sources of fuel gas for combined cycle plants

New Gas Turbines

Recent advances in gas turbine efficiency have been due to technology and material advances that have allows the use of higher gas inlet temperatures Further research in this area as well as improved cooling systems indicates that additional improvements are possible Research projects are being conducted for improved cooling systems for the hot gas path of the turbine However, more advanced cooling technologies employing water and steam cooling systems do not yet appear close to the point where they could be used in a commercial gas turbine

Therefore, research work is concentrating more on the development of new materials such as γ^1 super alloys, oxide dispersion strength alloys, directionally solidified blades and more efficient air cooling systems employing improved film cooling and impingement cooling

The use of ceramic materials for rotating parts, primarily blading still appears to be far from the commercialization stage, because of the low reliability of ceramic blades Ceramics are however, being used more frequently in the hot gas path of newer gas turbines

Air compressor research and development are equally important and are leading to higher compression ratios and higher volumetric flows The advantages of higher gas inlet temperatures cannot be fully realized without increasing the compression ratios to higher values needed Higher volumetric air flows allow higher power ratings for the units Modern compressor blading can handle much higher flows than in the past The use of transonic stages have made it possible to attain equivalent outputs and pressure ratios with fewer compressor stages

Improvements so far have lead to combined cycle efficiencies of over 50% and capacities of over 200 MW for 50 Hz and 150 ~~Hz~~ MW for 60 Hz turbines This in turn has lead to lower costs and increased use of combined cycle power plants for large power stations including repowering projects Gas fired combined cycle plants will within the next five years reach efficiencies in the 52 to 55% or higher, range (LHV) 60%

Coal Gasification, Fluidized Bed Combustion

Since coal is abundant and cheap in the U S and many other countries much research has been done to enable the use of this fuel in gas turbines and combined cycle plants There are two techniques that hold promise of being commercially viable Autothermal coal gasification and pressurized fluid bed combustion

Coal Gasification

The gasification of coal is an old technology and was used to manufacture fuel gas for distribution in cities and in the chemical and petrochemical industries to produce raw materials for chemical processes

Autothermal coal gasification is based on the partial combustion of coal in order to generate the heat for the gasification process The coal gasification process converts coal, usually along with water, into H_2, CO, CO_2, CH_4, H_2S and H_2O The main reactions are as follows

$$C + H_2O \Rightarrow CO + H_2$$
$$C + CO_2 \Rightarrow 2CO$$
$$C + 2H_2 \Rightarrow CH_4$$
$$CO + 3H_2 \Rightarrow CH_4 + H_2O$$

Since the overall reaction is endothermic, the coal must be partially burned The oxygen required for combustion to take place is supplied to the gassifier by injecting either air or oxygen into it Gasification processes can be therefore be classified as either

1 Air Blown Gasifiers Producing gas with low heating values (100 to 120 Btu/scf)

2 Oxygen Gasifiers Producing gas with medium heating values (about 330 Btu/scf)

Either process can be used for combined cycle application The gas compositions of the gasification processes are shown in Table 1-1

Table 1-1 Typical Gas Compositions (%Volume)

	Natural Gas	Oxygen Blown	Air Blown
CO		60	25
H_2O		30	18
CO_2		3	7
N_2	10	2	49
CH_4	90	5	1
Relative Heating Value	1	1/3	1/9
Adiabatic Flame Temperature	3812 °F	4172 °F	3452 °F

In addition to a distinction based on the oxidation gas, a distinction can also be made on the flow pattern of the gasifier There are three main flow patterns

1 Fixed bed gasifiers with counter current flow

2 Entrained bed gasifiers with parallel flow

3 Fluidized bed gasifiers with bubbling or circulating beds

Figure B-1 shows the working schematics of these types The gasifiers which are closest to large sale scale commercial application for combined cycle use are of the fixed bed type or the entrained bed type, both oxygen blown

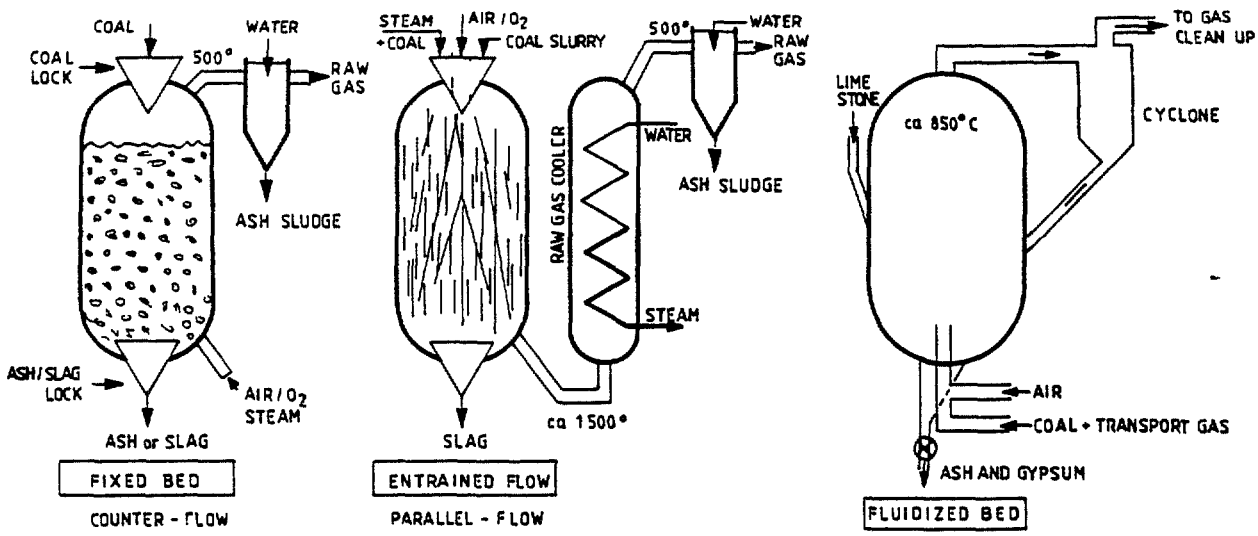

Figure B-1 Working Schematics of the Main Types of Gasifiers

Gasifiers can also be classified according to their operating pressures They may be operated at either atmospheric pressure or be pressurized at a higher pressures higher than atmospheric The pressurized gassifiers must be used for combined cycle plants since the gas pressure at the inlet to the gas turbine must be at least 290 psia Therefore, gasifiers for combined cycle plants usually operate at 275 to 420 psig Table 1-2 shows the characteristics of some of the major coal gasification processes

Table 1-2 Characteristics of Some Major Coal Gasification Systems

	British Gas/Lurgi	Texaco	Shell	Prenflo	DOW	KRW	HT Winkler
Oxidant	Oxygen	Oxygen	Oxygen	Oxygen	Oxygen	Oxygen/ Air	Oxygen/Air
Type	Fixed Bed	Entrained Bed	Entrained Bed	Entrained Bed	Entrained Bed	Fluidized Bed	Fluidized Bed
Flow	Countercurrent	Parallel	Parallel	Parallel	Parallel	Bubbling or circulating	Bubbling or circulating
Raw Gas Temp							
Raw Gas Cooling	Quench	Quench/ cooler	Quench/ cooler	Quench/ cooler	Quench/ cooler	Quench/ cooler	Quench/ cooler

Emission control for coal gassification is much easier since it is much easier to obtain a very clean fuel by cleaning fuel gas than by cleaning the flue gas from a coal fired boiler The main reasons are as follows

1 The volume of gas of coal gas to be cleaned is less than 1% of the flue gas from a boiler

2 It is much easier to remove H_2S than SO_2, which makes it economically more feasible to remove more than 99% of the sulfur, as compared to only 90% in a scrubber of a coal fired boiler

3 Most other pollutants such as heavy metals, chlorides, etc are also removed in the gassification process

4 The major by product of the desulfurization process with coal gassification, except in a fluidized bed gassifier, is elemental sulfur, which is easier to transport and sell Other desulfurization processes produce 5 to 10 times as much waste

5 Most oxygen-blown gasifiers produce unleachable slag Waste disposal is far easier than with the ash produced by coal fired boilers

These reasons make coal gasification one of the most promising methods to produce a truly clean coal burning plant

Coal gasification can be either a system integrated into a combined cycle plant or a non-integrated system with the combined cycle plant and the coal gasification plant separated by some distance from each other However, the integrated system provide the best utilization of waste heat generated by the gasification process and very greatly improves the overall efficiency of the entire system

A major consideration for any integrated coal gasification combined cycle plant is the temperature at which the gas is cleaned All successful systems used today clean the gas at ambient temperatures This means that the gas produced must be cooled after it leaves the gasifier It is important that this heat be captured and used efficiently Entrained bed gasifiers which produce gas at approximately 2700 oF are equipped with gas coolers to generate either saturated or superheated high pressure steam which is then used to generate more power in the combined cycle plant

Figure B-2 is a typical IGCC plant with a entrained bed gasifier The steam generated in gasifiers and the heat recovery steam generator all flows through the high pressure section of the steam turbine About 40% of the steam is generated in gasification process of the plant

The gas from a fixed bed gasifier is cooled to a much lower temperature because of the countercurrent flow of the gas and coal, approximately 900-1000° F Heat recovery is therefore less important and such plants usually generate only small amounts of low pressure steam Figure B-3 shows a British Gas-Lurgi gasifier, which is a countercurrent type There is no high pressure steam generating gas cooler and the cycle is much simpler

The technique used to clean the gas is quite similar for both systems However, there is one difference The gas produced in a fixed bed gasifier contains tars and phenols which must be separated out and recycled back to the gasifier The entrained bed gasifier operates at a much higher temperature which "cracks" the heavy hydrocarbons

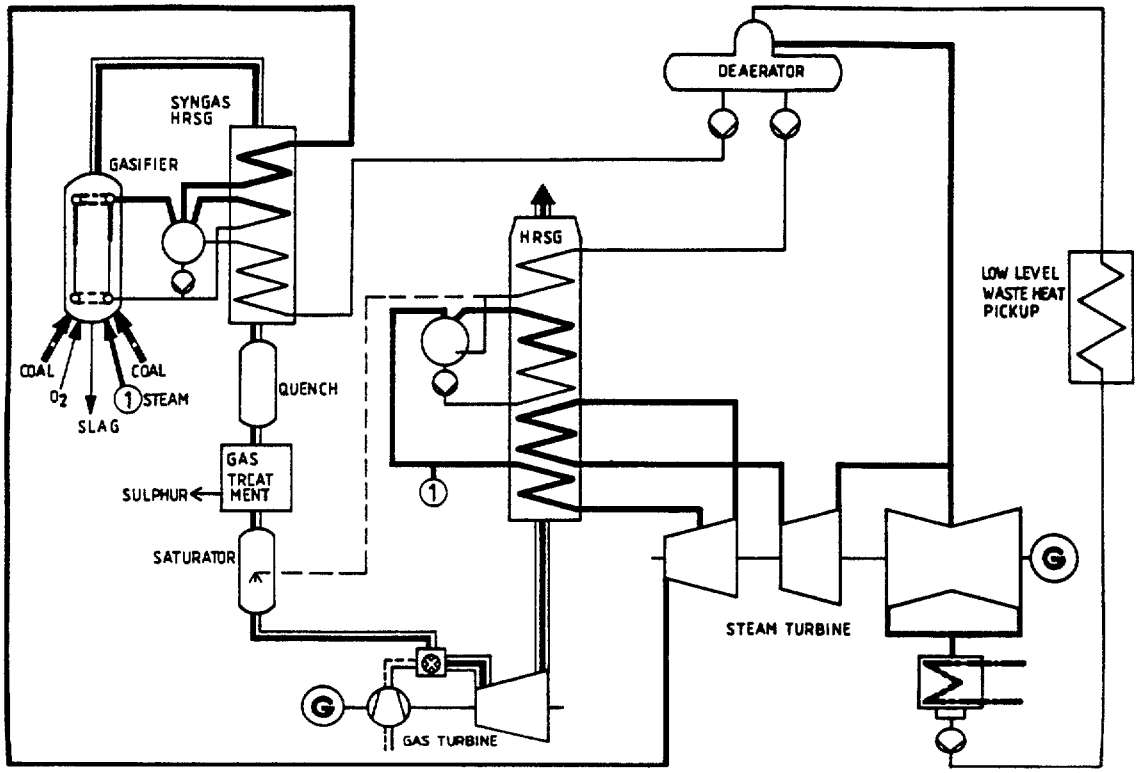

Figure B-2 Entrained Bed Gasifier IGCC Plant

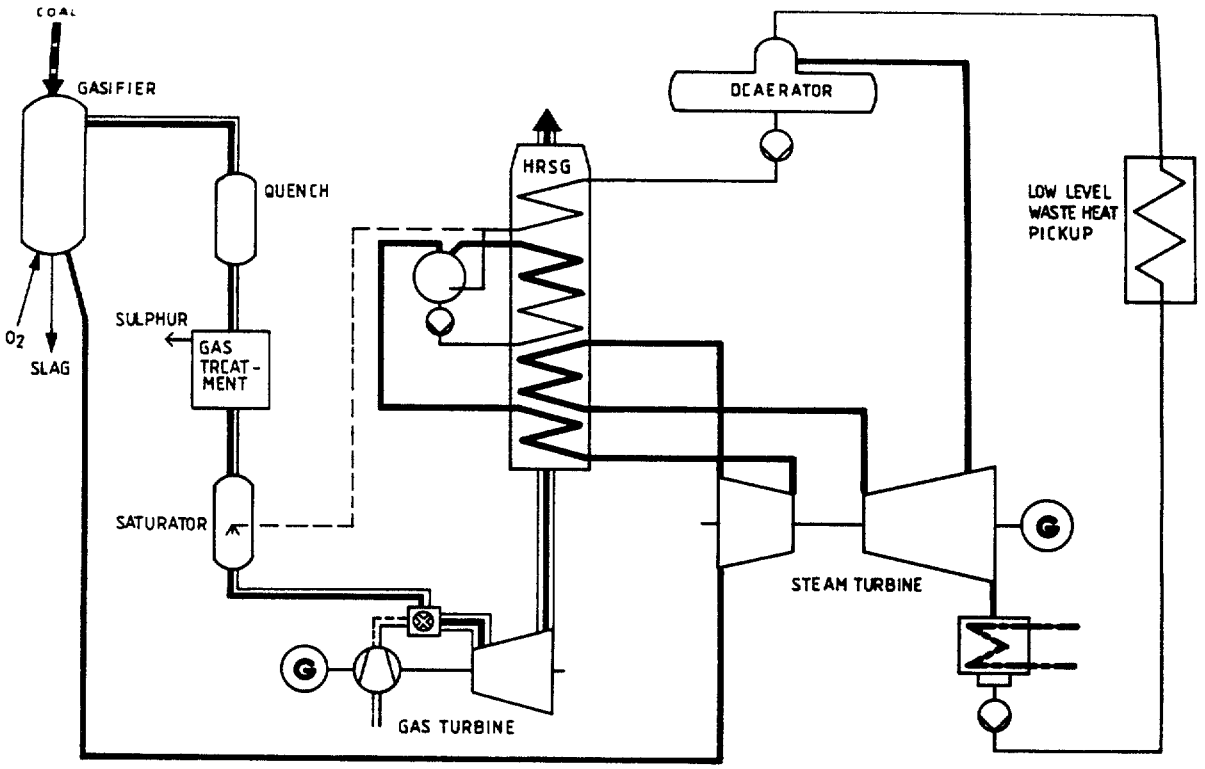

Figure B-3 Fixed Bed Gasifier IGCC Plant

157

Table 1-3 provides key data for the plant shown in Figure B-3 This IGCC plant has a 150 MW gas turbine with an efficiency rating of 35% at ISO conditions

Table 1-3 Technical Data For a Entrained Bed IGCC

Gasifier	Entrained Bed
Coal	Illinois No 6
Heating Value of Gas	290 Btu/scf
Sulfur Removal	99%
NO_x Emissions	75 ppm volumetric
Energy Input from Coal (LHV)	577 MW
Gas Turbine Output	173 MW
Steam Turbine Output	110 MW
Plant Power	33 MW
Net Output	250 MW
Net Efficiency (LHV)	43 3%

NO_x reduction is accomplished by scrubbing with water and the plant cost is comparable for a coal fired unit with scrubbers and a NO_x reduction system

Several large IGCC plants have been built that demonstrate the technology and coal gasification is a proven technique IGCC plant efficiencies can be improved by using gas turbines with higher gas inlet temperatures, dry low No_x combustors and hot gas clean up Gas cleaning systems that operate at 752 to 932 °F would improve the performance of air blown systems The gas flow is approximately three times as great as an oxygen blown system, but no air separation plant is needed

Pressurized Fluid Bed Combustion Systems (PFBC)

Fluidized bed boilers use a mix of high sulfur coal and limestone to remove the sulfur from the coal during the combustion process This is true for both atmospheric and pressured bed units Since the temperature must not exceed approximately 1650 °F, very little NO_x is produced Atmospheric units have very low power density, the dimensions

of the atmospheric fluidized bed units become quite large, even for low steam outputs Pressurized units offer several advantages over atmospheric units, one of which is the use of a gas turbine as the forced draft compressor to increase the pressure The other major advantage is the reduction in overall size roughly in proportion to the pressure of the combustion chamber

This process is used in many fluidized bed boilers that operate at atmospheric pressure The power density of these units is very low and the dimensions of these units become very large at higher ratings which provides a great incentive to increase power densities Pressurization provides two major advantages

1 The dimensions of the fluidized bed and steam generator are reduced approximately in proportion to the pressure

2 The overall plant efficiency is increased by the use of the gas turbine as the pressurizing unit

The two main types of PFBC plants differ in the inlet temperature of the gas turbine The low temperature type uses a gas turbine that has a low gas inlet temperature approx 842-932 oF, which is just high enough so that the gas turbine is just capable of driving the gas compressor This type is illustrated in Figure B-4

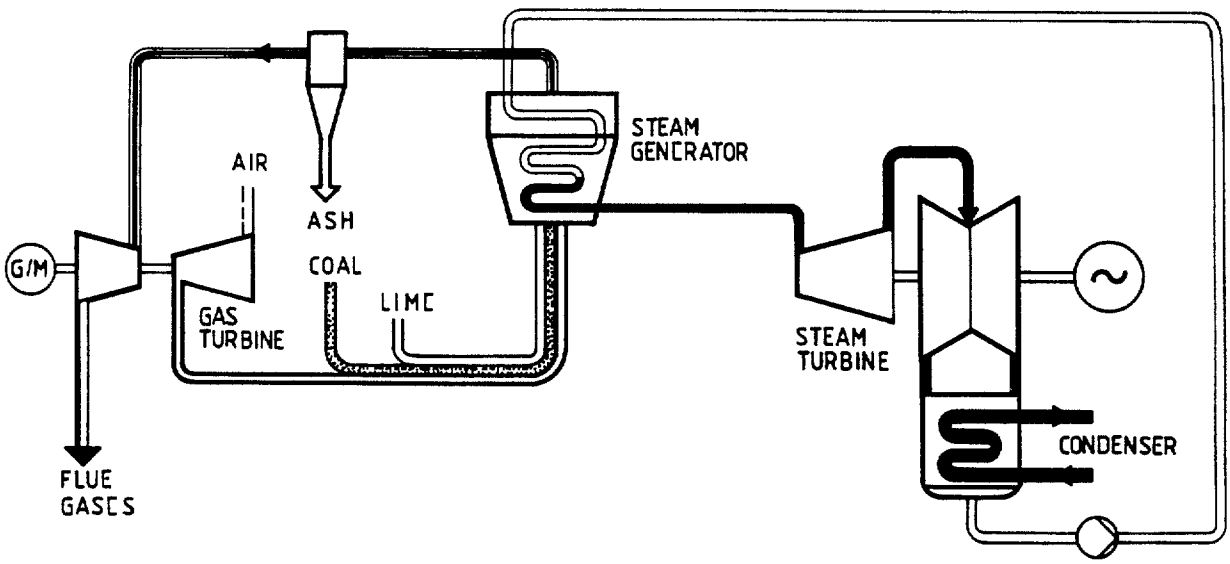

Figure B-4 PFBC Plant with a Low Temperature Gas Turbine

The low temperature type is not a true combined cycle unit since it is thermodynamically equivalent to a conventional steam turbine power plant The principal advantage of the low temperature type is the relative ease of cleaning the flue gases which typically are about 840 to 930oF

The high temperature type uses a gas turbine located at the outlet of the fluidized bed and is driven by exhaust gases with temperatures of approximately 1572 to 1662 oF The power produced by the gas turbine is greater than that needed to drive the compressor This type is shown in Figure B-5

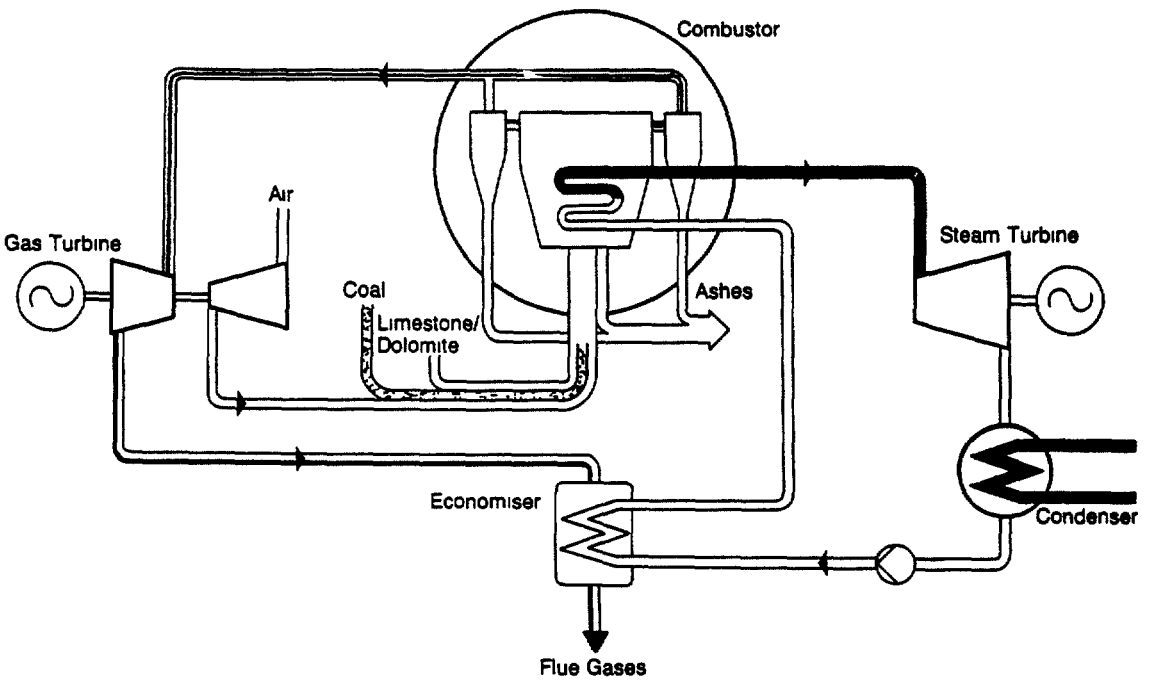

Figure B-5 PFBC Plant with a High Temperature Gas Turbine

The high temperature type are combined cycle units and typically achieve cycle efficiencies of 43 to 44% However the gases are hot (1570 to 1660oF) which makes gas cleanup more difficult

160

The plant shown in Figure B-5 has the following specifications

Net power output	80 MW
Gas turbine output	17 MW
Steam turbine output	67 MW
Net efficiency	42 5%

A typical PFBC is shown in Figure B-6 Flue gas from the PFBC is cleaned by two stage cyclone separators since electrostatic precipitators cannot operate at the high flue gas temperatures generated by the PFBC Therefore the gas must be cleaned after it passes through the economizer and is cooled enough to be cleaned by a conventional "hot' electrostatic precipitator

Increases in output and improved steam conditions will lead to efficiencies of 44 to 45% The compact design and high efficiency (5 to 10% higher than conventional steam power plants) make the PFBC type plant very desirable The one major drawback however is the necessity of high temperature flue gas cleaning and the consequent reduction in the gas temperature supplied to the gas turbine This is much below the high temperature potential of modern gas turbines The economizer placement, after the gas turbine, also reduces the compactness of the plant

There are a number of ideas that have been suggested about how to get around these difficulties, but they remain to be commercialized One possibility is the pyrolysis of the coal into a gas and then burning the gas following the fluidized bed to provide a clean high temperature gas that could be used in the high temperature gas turbine This process would compete with the IGCC and it will remain to be seen whether or not this technique actually becomes commercially viable A hot air turbine has also been suggested The air would be used to cool the PFBC and then expanded in the gas turbine before being used as combustion air in the open process The air would provide a clean medium for the gas turbine, but since air does not have as good heat transfer properties as water or steam, it would require much greater heat transfer areas and heat exchangers The material used for the cooling tubes not only would have to be very highly corrosion and erosion resistant, but would have to have very good heat transfer characteristics

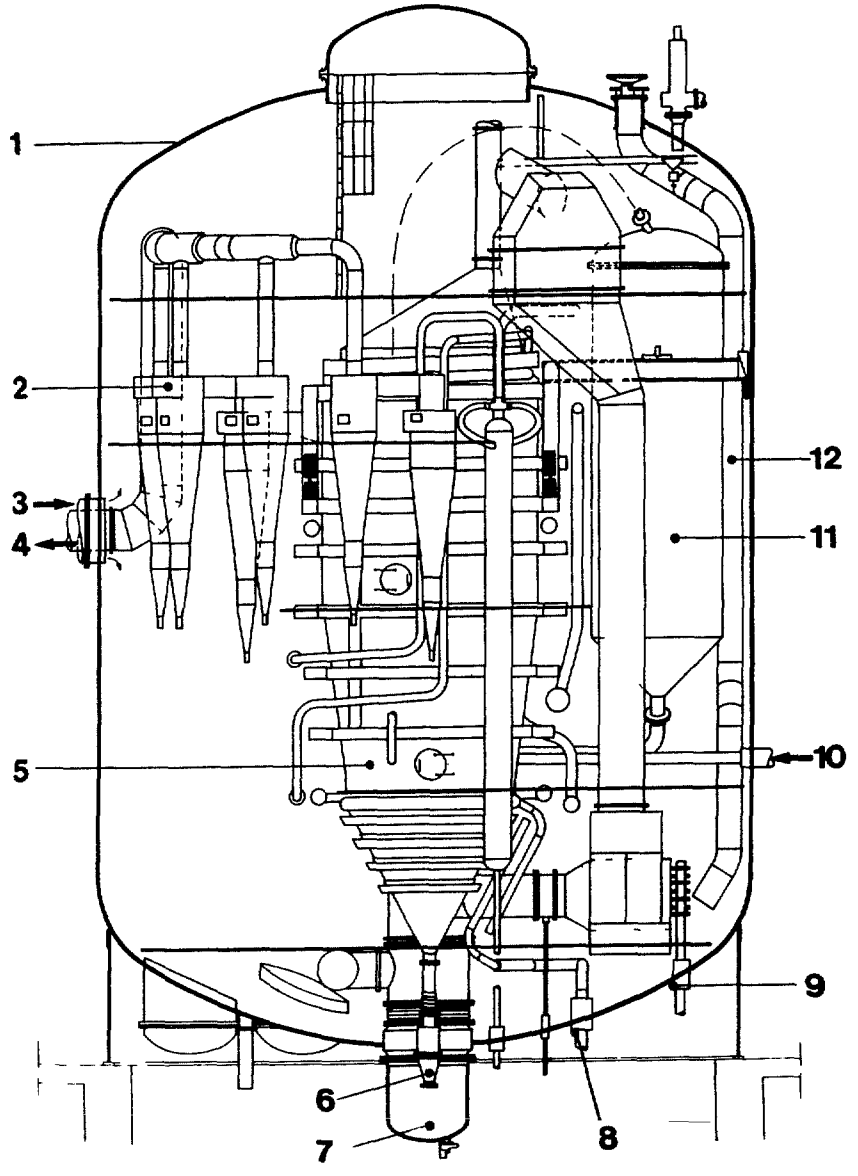

Figure B-6 ABB Pressurized Fluidized Bed Boiler

Dry Low NOx Combustors

The two disadvantages of conventional NOx reduction methods both involve water They are high water consumption and the resulting reduction in efficiency of injecting water into the combustion gas They are environmental considerations with the use of water for Nox reduction as well Therefore a lot of research and development has been directed to reducing NOx through improved combustion techniques These techniques use either an oxygen lean or oxygen rich approach to combustion

In oxygen lean combustion, only small amounts of NOx can be formed, even at very high temperatures, because there is a scarcity of oxygen to combine with the nitrogen

162

The oxygen has greater propensity to combine with hydrogen and carbon leaving little or no oxygen available to combine with the abundant nitrogen However, in order to get complete combustion, this first stage of combustion must be followed with a cooler oxygen rich stage during which the temperature is too low to allow formation of much NOx This technique is being used frequently in modern steam generators and is usually referred to as staged combustion, since it consists of two distinct stages

Gas turbines however, because of the high operating excess air ratios can use a different technique, combustion with excess air This technique works the same way as injecting water or steam, but uses air as the cooling medium Large amounts of air are used to cool the flame and reduce NOx The limiting factor is flame stability With excess air amounts greater than 3, flame stability becomes very poor and the flame can be completely extinguished This is not usually a problem at full load since the maximum amount of air supplied will seldom produce an excess air ratio higher than 2 The remaining air is required to cool the hot parts and the turbine balding However, at lower loads the excess air ratio can become much higher and produce flame instability

In order to keep the flame stable at the higher excess air ratios, the air and fuel must mix together more homogeneously Low NOx burners using high excess air are referred to as premix burners, Figure B-7 shows a typical premix burner cross section The air and natural gas are mixed in a tube and then burned downstream from the swirl basket The swirl basket is located at the end of the mixing tube and helps contain the flame There are two major problems with this burner The first is that it is difficult to burn liquid fuels since the mixing is not as complete and the second is that there is a risk of back flash or burning taking place in the mixing tube

The burner works well with natural gas as long as the gas temperature is not too high This limits the pressure ratio of the gas turbine to about 15 to 16 The burnercannot be used with gases that have higher flame propagation speed such as hydrogen or carbon monoxide and has hardly ever been used successfully with liquid fuels There are a few gas turbines burning natural gas in commercial operation that have dry, low Nox combustors of this type One such type is a 70 MW unit that uses 36 combustors with swirl baskets This helps solve the part load operation problem by switching off groups of burners as load is dropped, thus maintaining lower excess air levels and stable combustion There are five groups of burners in this configuration and they are controlled with a single fuel valve as shown in Figure B-8

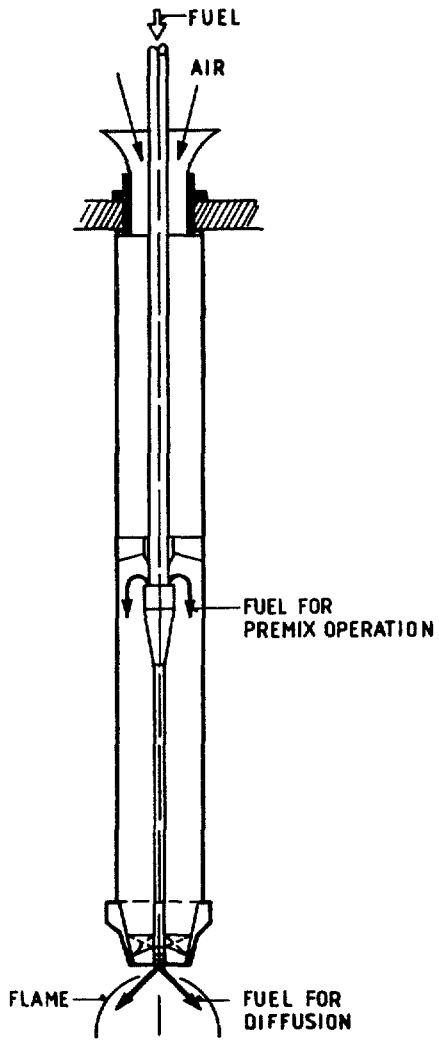

Figure B-7 Premix Burner

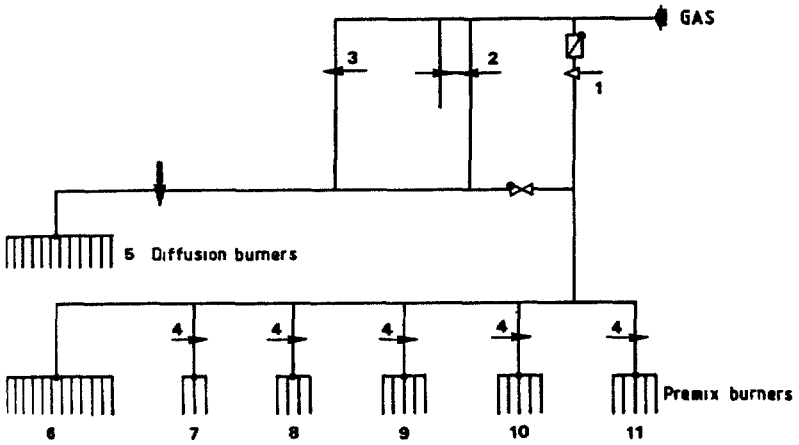

Figure B-8 Fuel Flow Control and Grouping of Burners for Dry Low NOx Burners

Some other solutions to this problem at part load use a progressive switch over from premix combustion to normal diffusion combustion as load drops and the installation of an air bypass that allows more air to escape the combustion zone as load is dropped

Several large gas turbines are operating with this dry low NOx burner technology firing natural gas and producing full load NOx emissions of between 25 and 75 ppm at 15% O2 depending on design further work is being done to produce even lower emission levels and greater fuel flexibility

One other technique has been successful in reducing Nox emissions This is the surface burner This burner operate on the principal that many small flames over a larger surface area will limit the residence time within the flame is very short, leaving little time for Nox formation The problem with this technique is keeping the residence time short enough to keep Nox production low with out producing large amounts of carbon monoxide an unburned hydrocarbons One combustor of this type in a gas fired 45 MW gas turbine has 200 swirl baskets and produces full load NOx in the range of 50 to 80 ppm

Combined Cycle
Principles Course
Module 3

Steam Turbine Generator

FCS
Fossil Consulting Services, Inc.

Columbia, Maryland

166

TABLE OF CONTENTS

Section	Page
3 0 STEAM TURBINE-GENERATOR	1
3 1 Turbine Principles	2
3 1 1 Nozzles and Their Principles	2
3 1 2 Basic Turbine Types and Their Principles	4
3 1 3 Classification of Turbines	16
3 1 4 Comparison Turbines Types and Manufacturers	19
3 2 Turbine Centerline Components	25
3 2 1 Turbine Casings	28
3 2 2 Stationary Blades and Diaphragms	33
3 2 3 Turbine Seals	36
3 2 4 Turbine Rotors and Bucket/Rotating Blades	43
3 2 5 Pedestals/Standards	48
3 2 6 Bearings	51
3 2 7 Turning Gears	61
3 2 8 Shaft Grounding Brushes	64
3 3 Turbine Main Steam Valves	65
3 3 1 HP Turbine Inlet Valves	66
3 3 2 IP Turbine Inlet Valves	77
3 3 3 Low Pressure Valves	82
3 4 Turbine Lube Oil System	83
3 4 1 Typical Lube Oil System	84
3 4 2 Lube Oil System Operation	97
3 5 Gland Steam, Drain and Exhaust Hood Spray Systems	101
3 5 1 Gland/Steam Seal System	101
3 5 2 Exhaust Hood Sprays	109
3 5 3 Turbine Drains	112
3 6 EHC Hydraulic System	114
3 6 1 EHC Hydraulic Fluid	115
3 6 2 EHC Hydraulic System Components, Piping and Valves	116
3 6 3 EHC Hydraulic System Operation	121

TABLE OF CONTENTS (CONTINUED)

Section	Page
3 7 Turbine Supervisory Instrumentation	123
3 7 1 Vibration	123
3 7 2 Casing Expansion	125
3 7 3 Differential Expansion	125
3 7 4 Rotor Position	126
3 7 5 Eccentricity	126
3 7 6 Speed	127
3 7 7 Turbine Temperatures	127
3 8 Turbine Starting and Loading Instructions	128
3 8 1 Thermal Stress	128
3 8 2 Fatigue and Cyclic Life Expenditure	130
3 8 3 Fracture Appearance Transition Temperature	133
3 8 4 Typical Starting and Loading Instructions	134
3 8 5 Westinghouse General Operating Recommendations	146
3 8 6 Operational Limitations	149
3 8 7 Water Induction Recommendations	154
3 9 Turbine Controls	157
3 9 1 Simple MHC Turbine Control Systems	161
3 9 2 MHC Amplifiers	172
3 9 3 Control of MHC Turbine Steam Valves	176
3 9 4 A Nonreheat MHC System	179
3 9 5 Overspeed Protection for a Nonreheat MHC Unit	185
3 9 6 Reheat Unit MHC Controls	189
3 9 7 Boiler Following, Turbine Following, and Inlet Pressure Control	192
3 9 8 Electrohydraulic Control Systems Overview	195
3 9 9 EHC Common Control Elements	197
3 9 10 Example Analog EHC System	202
3 9 11 Example Digital EHC System	207
3 9 12 Emergency Trip System	220

168

3 0 STEAM TURBINE-GENERATOR

Steam turbine-generators are used to convert the heat energy in the steam from the turbine first into mechanical energy and then into electrical energy The steam turbine-generator is, by itself, a very simple machine with few moving parts This is desirable because it allows the steam turbine-generator to have very good reliability It is not unusual for a steam turbine-generator to run for more than a year without shutdown Current practice in the United States calls for steam turbine-generators to have major maintenance outages about once every five years In some European countries, the interval between major overhauls has been extended to more than ten years

While very reliable, the large steam turbine-generator is a complex machine with many components and supporting systems This Module covers the following.

- Turbine main steam valves
- Turning gear
- Turbine lube oil system
- Turbine EHC fluid system
- Turbine gland steam system
- Turbine controls
- Excitation system
- Generator gas control system
- Generator seal oil system

Operation of the steam turbine-generator requires consideration of many aspects including thermal stress, requirements for generator synchronization, and values of critical parameters such as the lube oil header temperature and gland steam header pressure The turbine manufacturer provides detailed starting and loading instructions to provide the operator with guidance on all of these aspects of operation

This module describes the principles used in the steam turbine, the centerline components and supporting systems of the turbine These principles are also discussed for the generator The basic principles associated with the steam turbine are equally applicable to the gas turbine

3 1 Turbine Principles

The power plant is often described as an energy conversion factory in which the chemical energy in the fuel is transformed in a series of steps into electrical energy, with the turbine-generator as one part of the power plant The function of the steam turbine is to convert the energy in the high pressure and temperature steam from the boiler or HRSG into mechanical energy It is common to refer to the energy conversion that occurs in the turbine as happening in a single step The conversion of energy in the turbine actually occurs in two steps First, the heat energy in the steam is converted into kinetic energy of a steam jet by nozzles Second, the steam jets are used with buckets or blades mounted on a rotor to produce a mechanical force and torque This Section describes both of these processes

3 1 1 Nozzles and Their Principles

A steam turbine nozzle is a device that converts heat energy of steam into kinetic energy (energy of motion) by expanding the steam A simplified, convergent nozzle of the type most often used in steam turbines is shown in **Figure 3-1**

Assume that steam at temperature T_1 and pressure P_1 enters a convergent nozzle The higher the pressure and temperature, the more thermal energy is in the steam The steam is moving at velocity V_1 before entering the nozzle The steam leaves the nozzle at a lower pressure and temperature, T_2 and P_2 but at a higher velocity, V_2 This is because some of the heat energy in the steam has been converted into energy of motion, called kinetic energy Kinetic energy is a function of the square of velocity, therefore, as the velocity increases, so does the kinetic energy

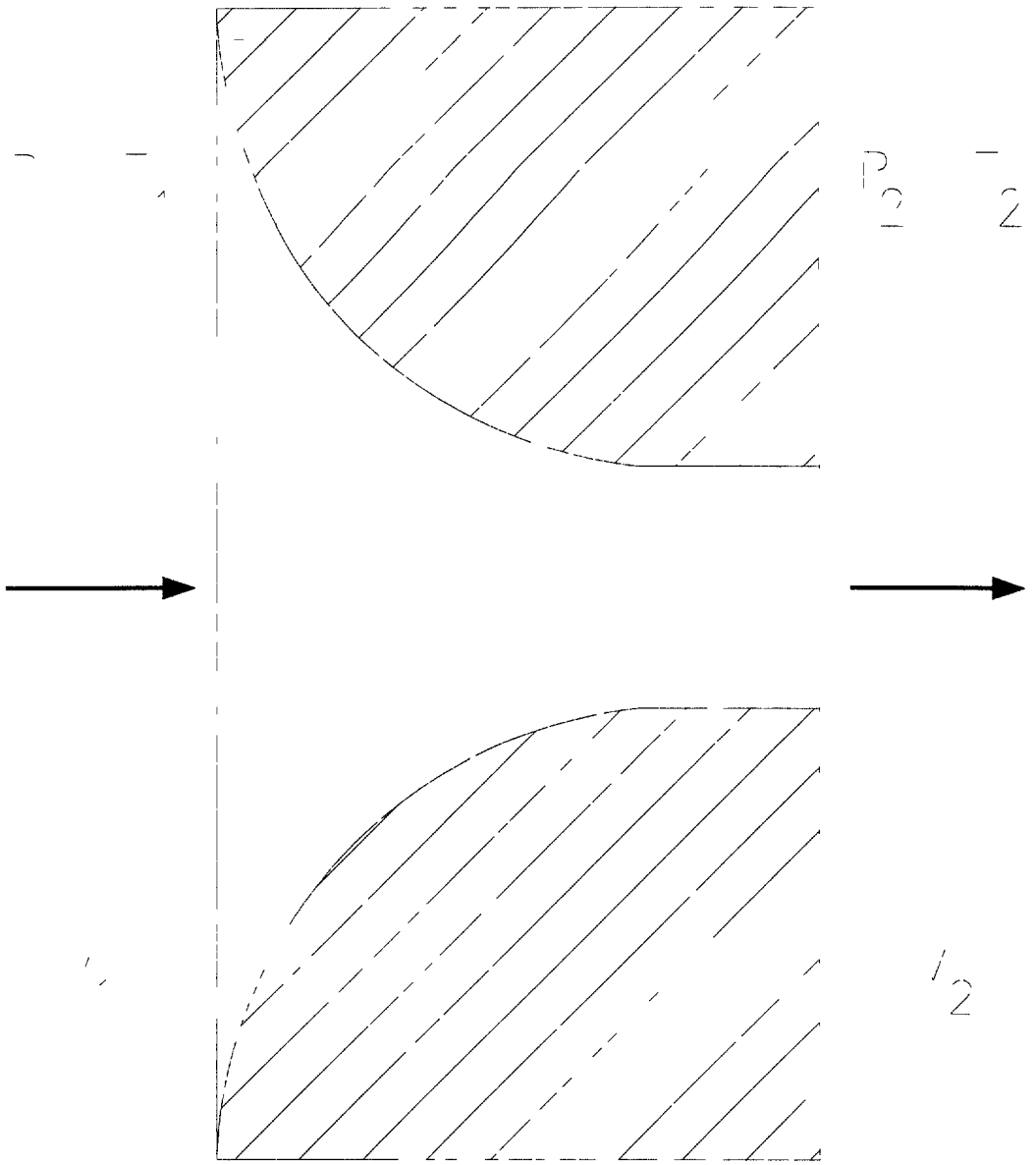

Figure 3-1 Simplified, Convergent Nozzle

171

The ratio of the pressure upstream and downstream of the nozzle is critical in the efficient operation of the nozzle It is designed to operate with a constant pressure ratio for best efficiency in energy conversion If turbine conditions change the pressure ratio, inefficiency results Also, if changes to the nozzle such as erosion occur, the design is upset and inefficiency results Common problems with nozzles which occur in operation are erosion from debris in the steam and deposits from contamination of the steam

3 1 2 Basic Turbine Types and Their Principles

The kinetic energy in a jet of steam is not useful as it is The nozzle by itself cannot convert the energy in the steam to useful mechanical energy There are two basic turbine types impulse and reaction Both use nozzles and rotor buckets (also called blades), but in different ways

Impulse Turbine

Figure 3-2 illustrates the operating principles of an impulse turbine Steam enters an impulse turbine through a stationary nozzle that expands the steam and creates a steam jet The steam jet strikes the rotor buckets Note that the terms bucket and blade are synonymous, however the term buckets is used most often for impulse turbines

In an ideal impulse turbine, the steam expansion occurs through the stationary nozzle, the buckets change only steam velocity Ideal impulse turbines do not exist in practice, however turbines that are nearly ideal impulse turbines are often used

Figure 3-3 shows axial and radial views of an ideal impulse turbine stage Each set of nozzles and rotor buckets is called a stage The graph in **Figure 3-3** shows that all the pressure drop in the stage occurs at the nozzles, and the velocity and volume of the steam increase in the nozzles

The expanded steam strikes the buckets, forcing them to rotate and reducing the velocity of the jet of steam The force of the steam on the buckets produces the mechanical energy needed to turn the generator This mechanical energy comes from the jet of steam which has its velocity reduced considerably

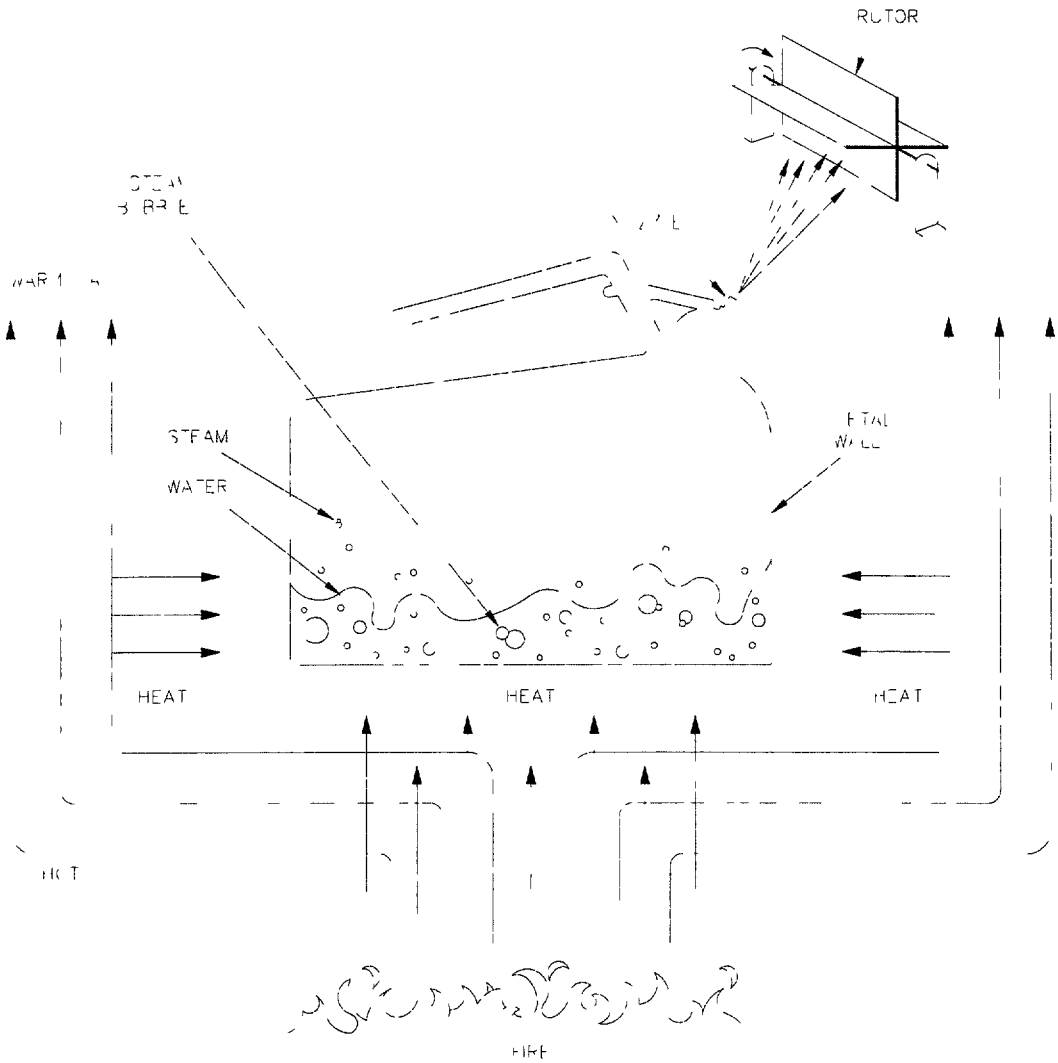

Figure 3-2 Impulse Turbine Operating Principles

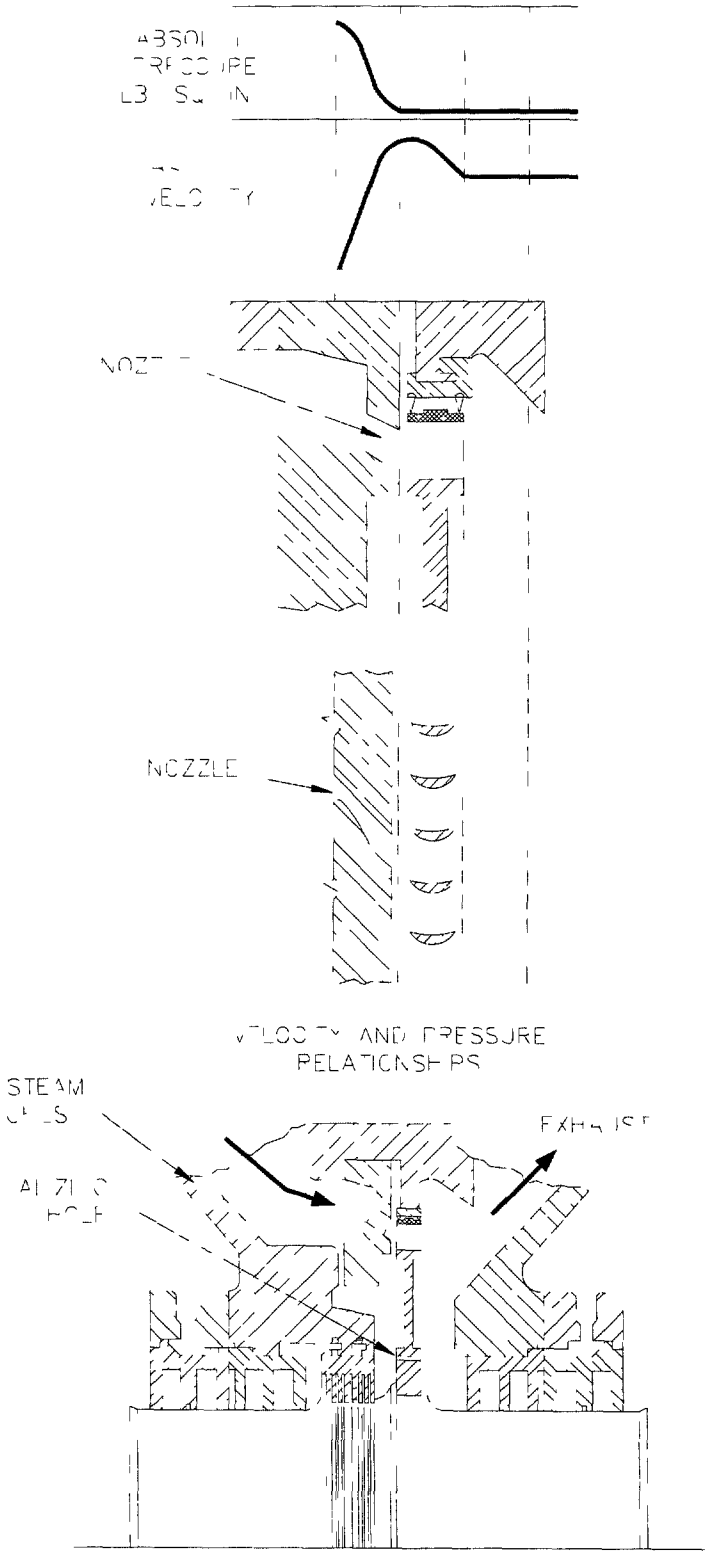

Figure 3-3 Ideal Impulse Stage

174

The steam jet from the first-stage nozzle strikes the first-stage rotor buckets After leaving the first-stage rotor buckets, the steam passes through the second-stage nozzle Some of the remaining thermal energy is then converted to kinetic energy The second-stage rotor buckets are forced to rotate by the steam jet leaving the second-stage nozzles

Impulse turbines can be multi-staged in two ways The first is the Curtis (or velocity compounded) stage shown in **Figure 3-4** A velocity compounded stage has one set of nozzles with two or more rows of moving buckets There are stationary buckets between each row of moving buckets Each set of nozzles and buckets makes up one stage In passing from the nozzle exit through one set of buckets, the velocity of the steam decreases because of the work it does on the buckets The steam then passes through a row of stationary buckets that change the direction of the steam without changing its pressure or speed The new steam direction is approximately parallel to the original steam direction leaving the nozzles The steam then strikes a second row of buckets that are attached to the same wheel as the first row This process may be repeated through as many as four rows of moving buckets in one stage Most Curtis stages, however, are limited to two rows of moving buckets

Figure 3-4 also shows that in an ideal Curtis stage, the entire pressure drop occurs through the nozzle, and the pressure remains constant across the buckets This is a characteristic of impulse turbines The velocity, on the other hand, drops in steps as it passes through the moving buckets

In a sense, Curtis staging is not multistaging This is because, as pointed out above, no matter how many rows of moving buckets a Curtis stage has, it is still only one stage It is possible, however, to have a second Curtis stage behind the first

The second way that impulse turbine stages may be arranged is the Rateau (or pressure compounded) stage A Rateau turbine consists of a series of nozzles and buckets Each set of nozzles and buckets makes up a stage **Figure 3-5** shows a four stage, pressure compounded, impulse turbine The steam pressure in a series of Rateau stages drops in steps through each set of nozzles

175

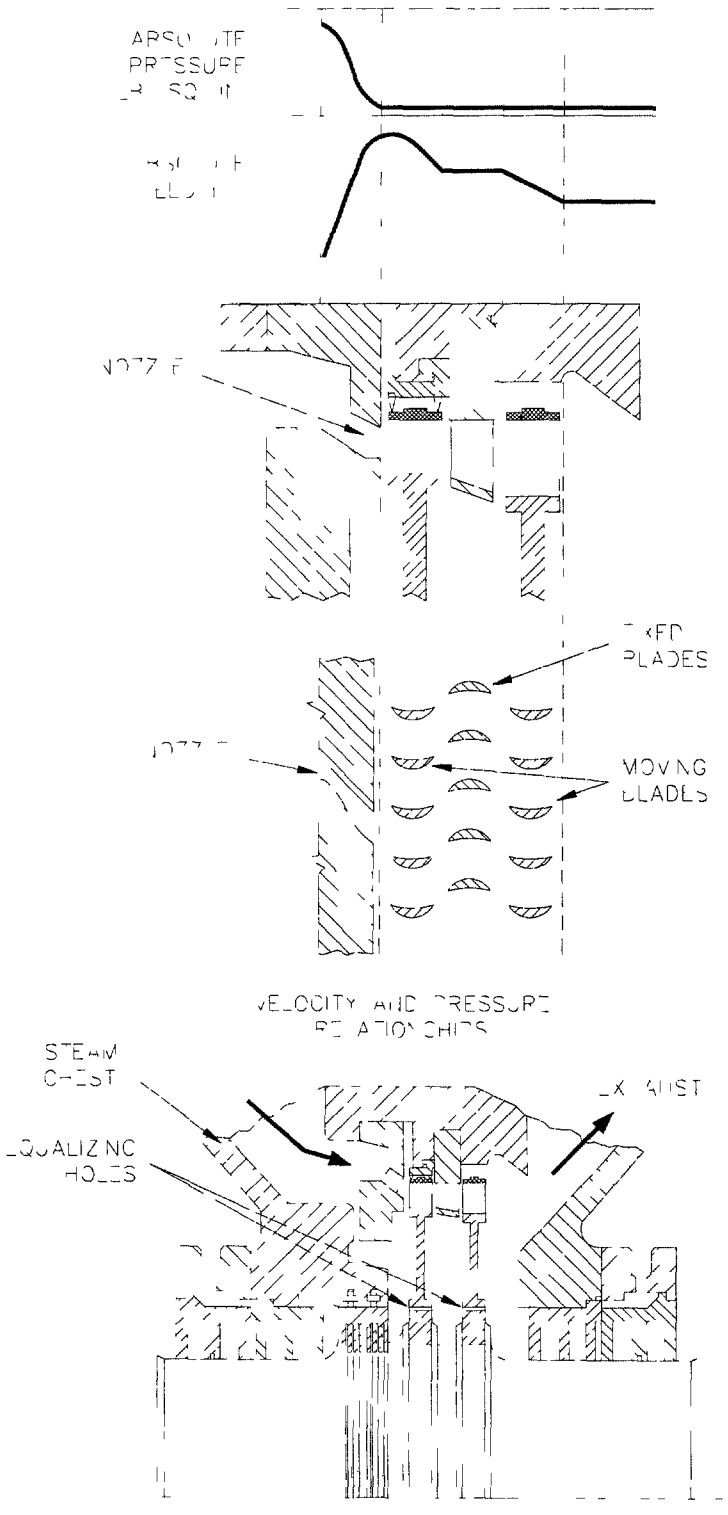

Figure 3-4 Ideal Curtis Stage

176

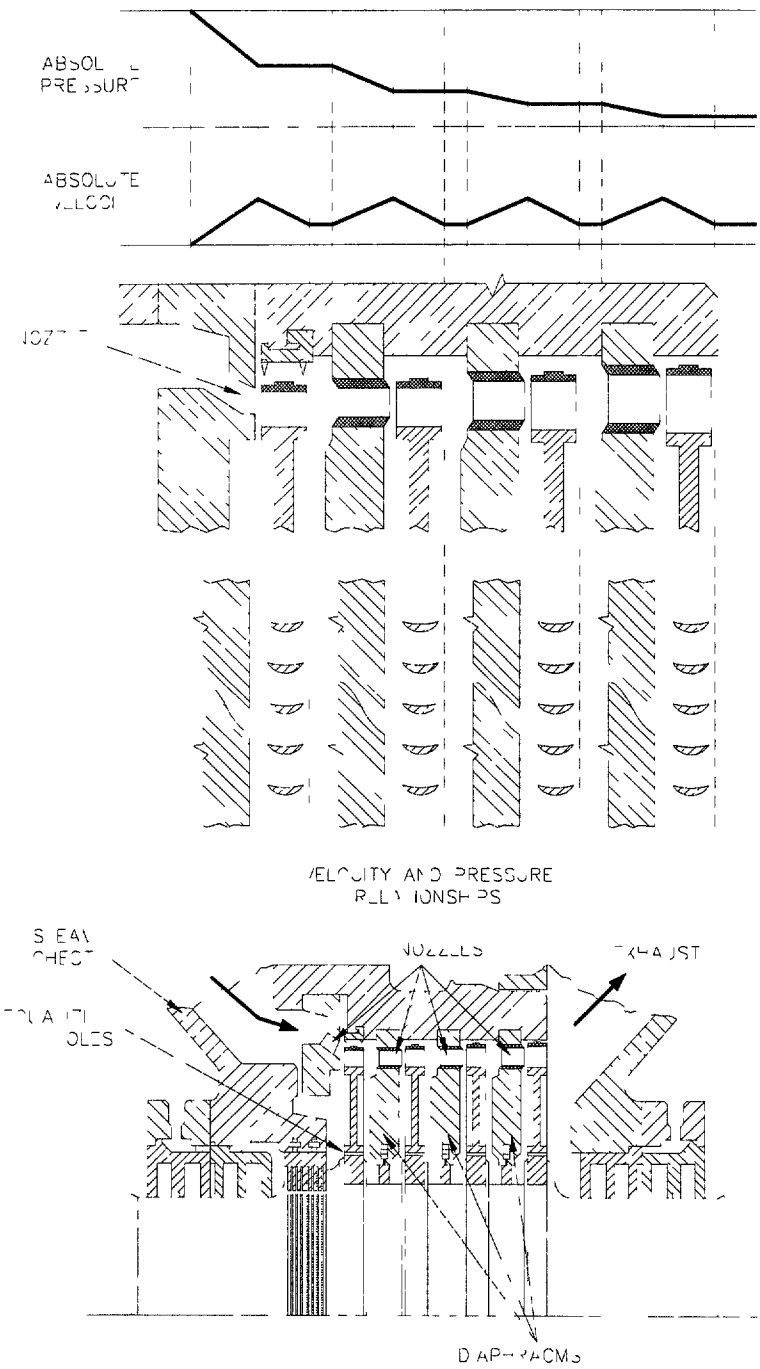

Figure 3-5 Arrangement of Typical Rateau Stages

177

Many old, multistage, impulse turbines consist of both Rateau (pressure compounded) and Curtis (velocity compounded) stages Usually, the first stage (and sometimes the second stage) is a velocity compounded stage with two rows of moving buckets on its wheel The remaining stages are then pressure compounded stages as shown in **Figure 3-6** Newer turbines seldom use Curtis staging, however, otherwise the multi-staging is the same It is not unusual to have as many as 20 stages in an impulse turbine

Reaction Turbines

Figure 3-7 illustrates the basic operating principles of an ideal reaction turbine The turbine rotor is forced to turn by the active force of the steam jet leaving the nozzle In an ideal reaction turbine, the moving buckets would be the only nozzles Therefore, all the steam expansion would occur in the moving buckets This is impractical in large turbines because it is difficult to admit steam to moving nozzles Thus, large turbines use fixed nozzles to admit steam to moving nozzles Therefore, practical, large reaction turbines use a combination of impulse and reaction principles

The typical impulse-reaction turbine has stationary nozzles and moving nozzles The moving nozzles are created by varying the cross section of the openings between adjacent buckets (usually called blades in such turbines) as shown in **Figure 3-8** Reaction turbines can be classified by the percentage of the energy conversion that occurs in the moving nozzles Typically, turbines that are called reaction turbines have about 50% reaction and 50% impulse Turbines which use a combination of impulse and reaction principles are often referred to simply as reaction turbines to distinguish them from the impulse turbines

Figure 3-9 shows a series of reaction turbine stages Each stage consists of a set of fixed nozzles and a set of moving nozzles The pressure drop occurs over both the fixed and moving nozzles Reaction turbines are multi-staged by alternating sets of fixed and moving nozzles and are basically pressure compounded turbines with reaction Each pair of fixed and moving nozzles makes up one stage Many times, reaction turbines have one Curtis impulse stage as the first stage of the turbine **Figure 3-10** shows a typical arrangement

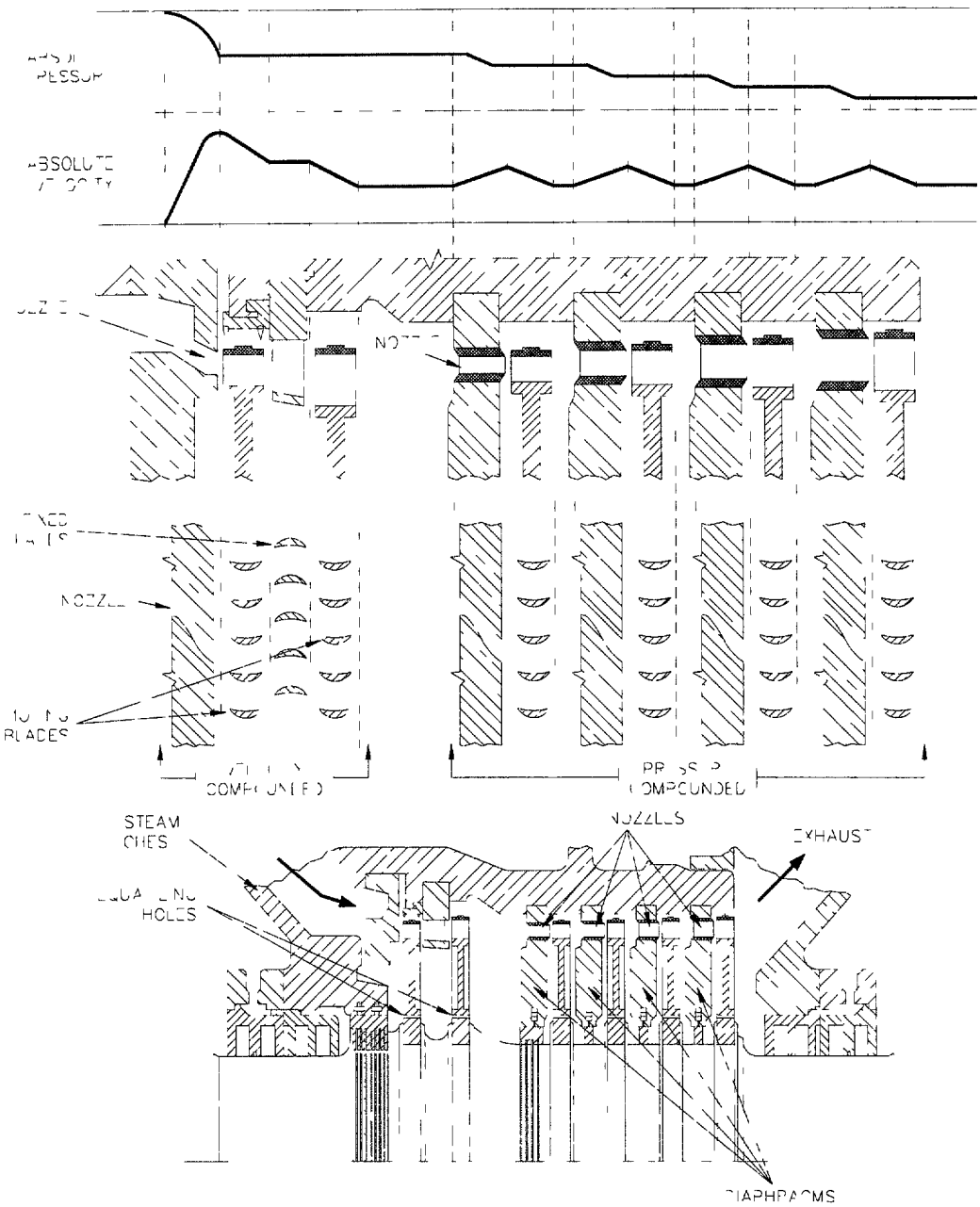

Figure 3-6 Combination of Curtis and Rateau Staging

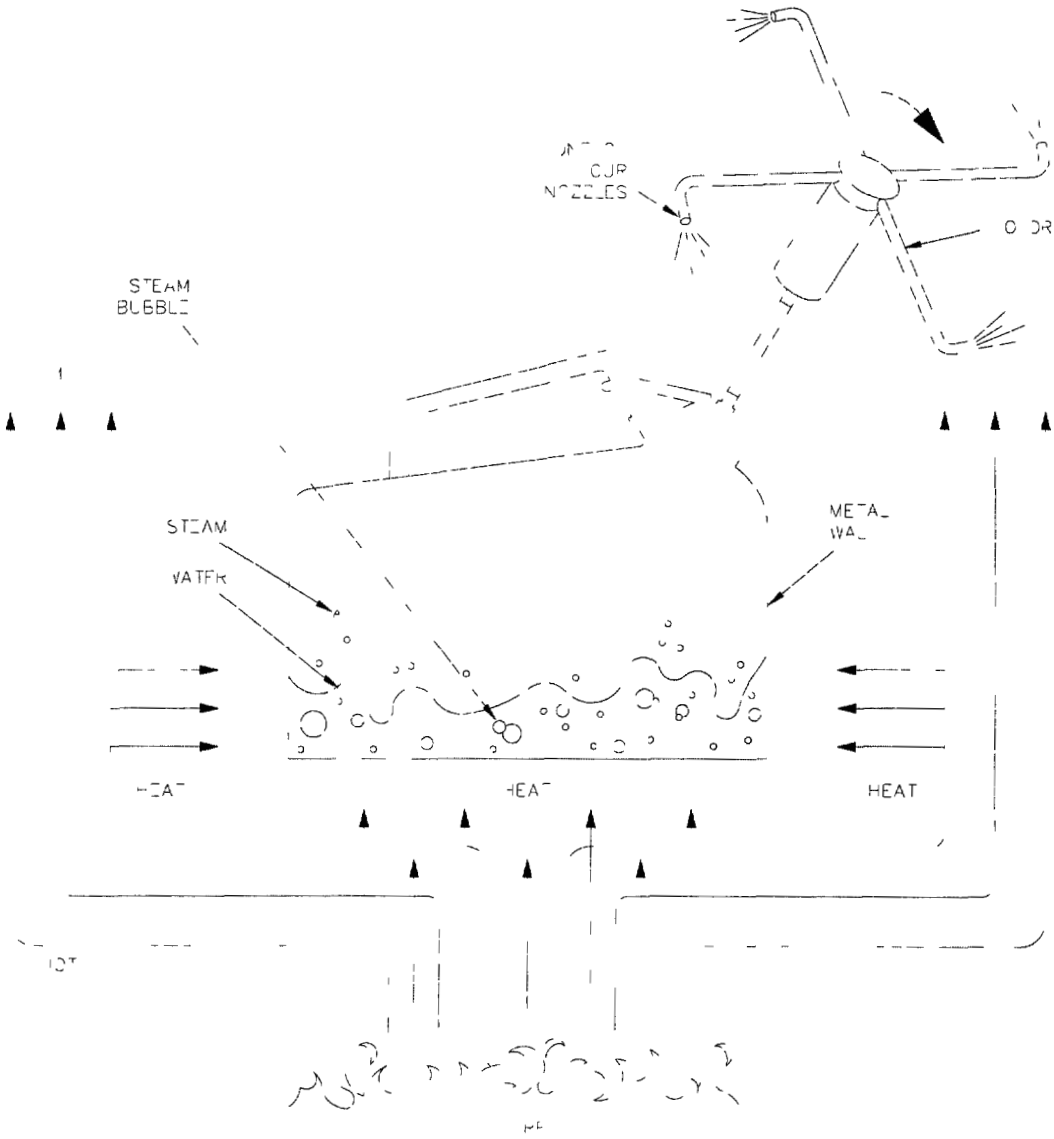

Figure 3-7 Reaction Turbine Operating Principles

186

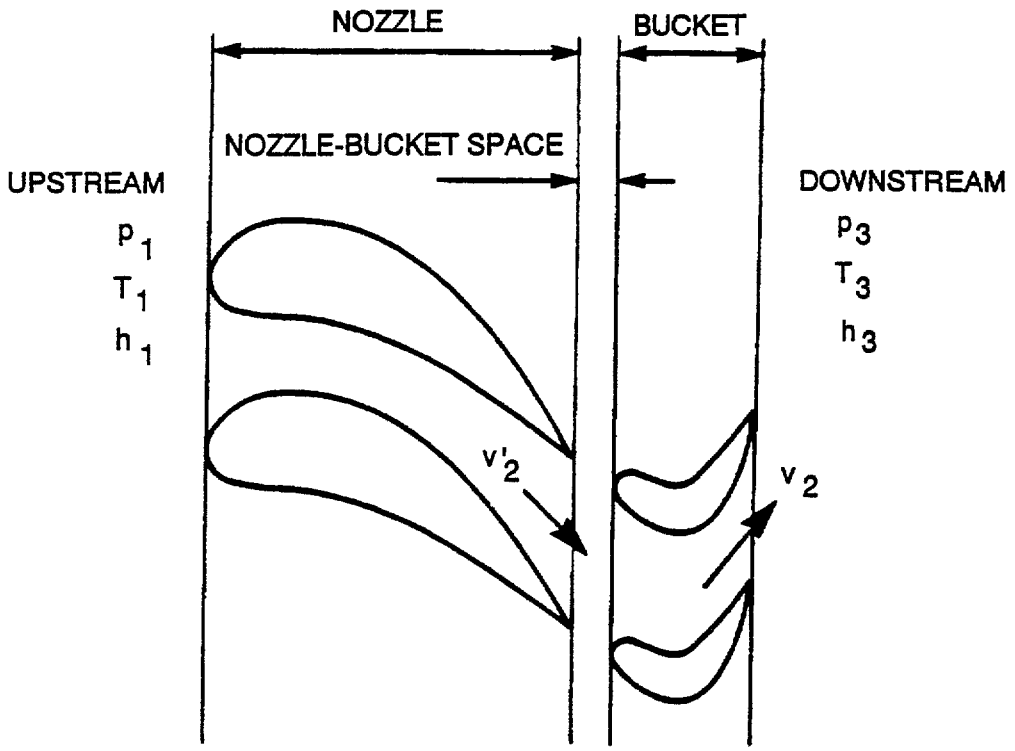

Figure 3-8 Reaction Turbine Blading

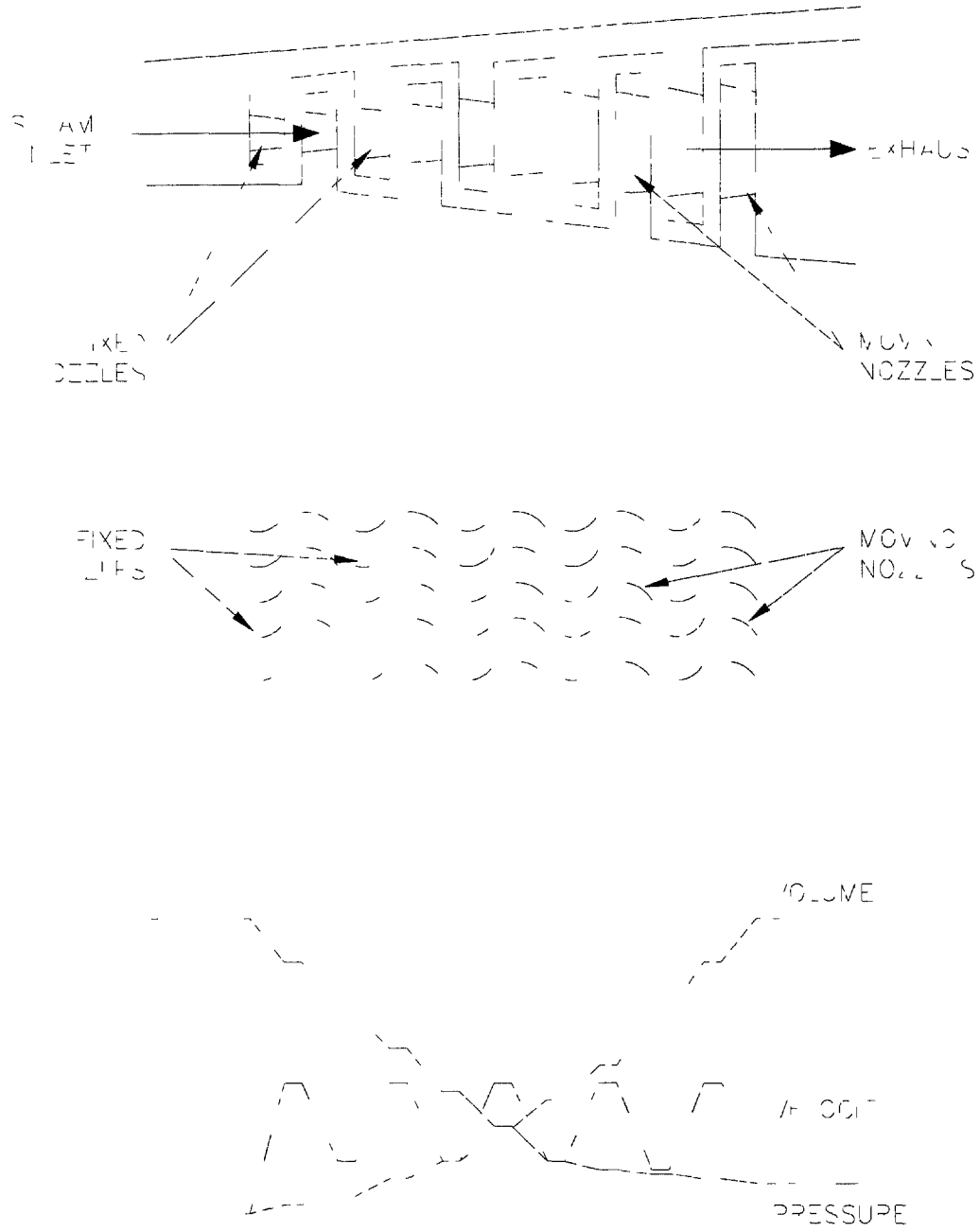

Figure 3-9 Arrangement of Reaction Turbine Stages

187

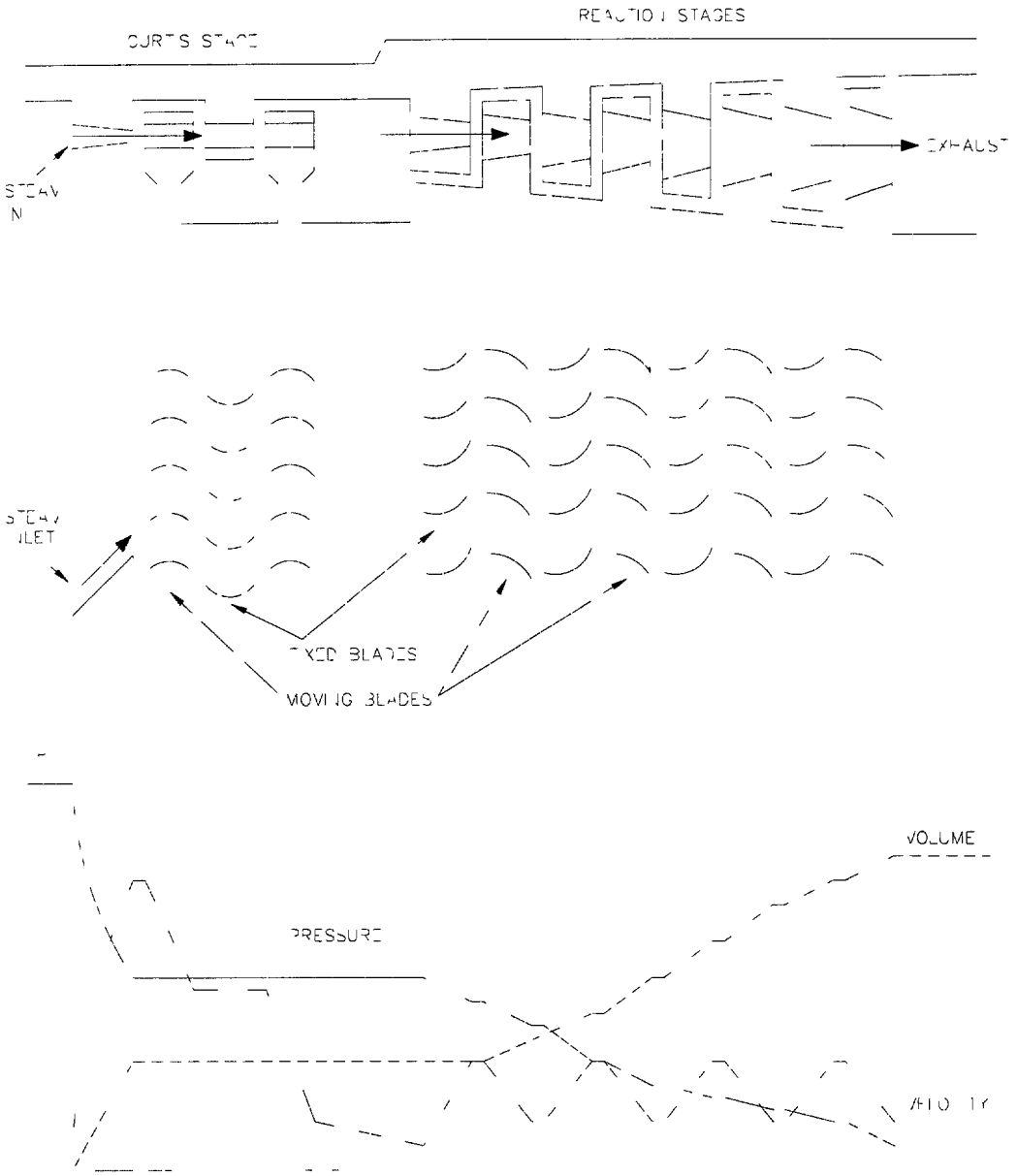

Figure 3-10 Combination of Curtis and Reaction Staging

3 1 3 Classification of Turbines

In the previous section, turbine theory and the two basic turbine types were described Impulse and reaction turbines can be further divided into a large variety of types using important characteristics Each of the six characteristics discussed below is applicable to both impulse and reaction turbines These characteristics are

- Condensing vs non-condensing
- Extraction vs non-extraction
- Single pressure vs multiple pressure
- Reheat vs non-reheat
- Single casing vs compound
- Exhaust flows

Condensing versus Non-condensing

One characteristic for classifying steam turbines is whether they are condensing or non-condensing In a condensing turbine, the steam is exhausted into a condenser By condensing the steam, the turbine exhaust pressure and temperatures can be very low Low exhaust pressure allows the turbine to make maximum use of the thermal energy in the steam and makes the power plant more efficient Nearly all large steam turbines are of this type

In non-condensing turbines, the exhaust steam is not condensed The steam may simply be allowed to blow into the atmosphere or (more often) it may be used for some useful purpose such as heating buildings If a non-condensing turbine exhausts to a pressure greater than atmospheric pressure, it is called a backpressure unit This type of turbine is most often seen in smaller, older plants or process plants such as steel mills, refineries and paper mills

Extraction versus Non-extraction

A second way turbines can be classified is by extraction or non-extraction Extraction turbines are sometimes called "bleeder" turbines An extraction turbine is a multi-stage turbine where some of the steam is exhausted, or bled, from between turbine stages at extraction points This extraction steam may be used for regenerative feedwater heating or other purposes

Single pressure vs multiple pressure

Most turbines have steam admitted to the first stage from a single source Some turbines have steam at a lower pressure admitted to the steam path at some point after the first stage This arrangement is common in steam turbines used in combined cycle plants because it is common to have Heat Recovery Steam Generators (HRSG's) that operate with more than one pressure

Reheat versus Non-reheat

A third way that turbines can be classified is reheat or non-reheat A reheat turbine is a multistage turbine in which the steam is directed from some intermediate stage of the turbine back to the boiler In the boiler, the steam is reheated and then piped back to the turbine Some large turbines return the steam to the boiler to be reheated a second time This is called a double reheat turbine There are two advantages to reheating steam First it makes the power plant more efficient thermodynamically Second, it delays the start of steam condensation in the turbine Nearly all modern large steam turbines use reheat Most have only one stage of reheat, however some larger units use two stages of reheat

Single Casing versus Compound

Another way to classify turbines is as single casing or compound turbines A single casing turbine has all the stages of the turbine in one casing as shown schematically in **Figure 3-11(a)** As turbines become larger, it is not practical to have all the stages in one casing Therefore, they are divided into two or more casings These machines are known as compound turbines There are two different types of compound turbines, tandem-compound and cross-compound

A tandem-compound turbine is shown in **Figure 3-11(b)** The turbine sections are in line with one another and the sections are on the same shaft The tandem compound turbine shown has two different sections Large modern units may have as many as five separate sections

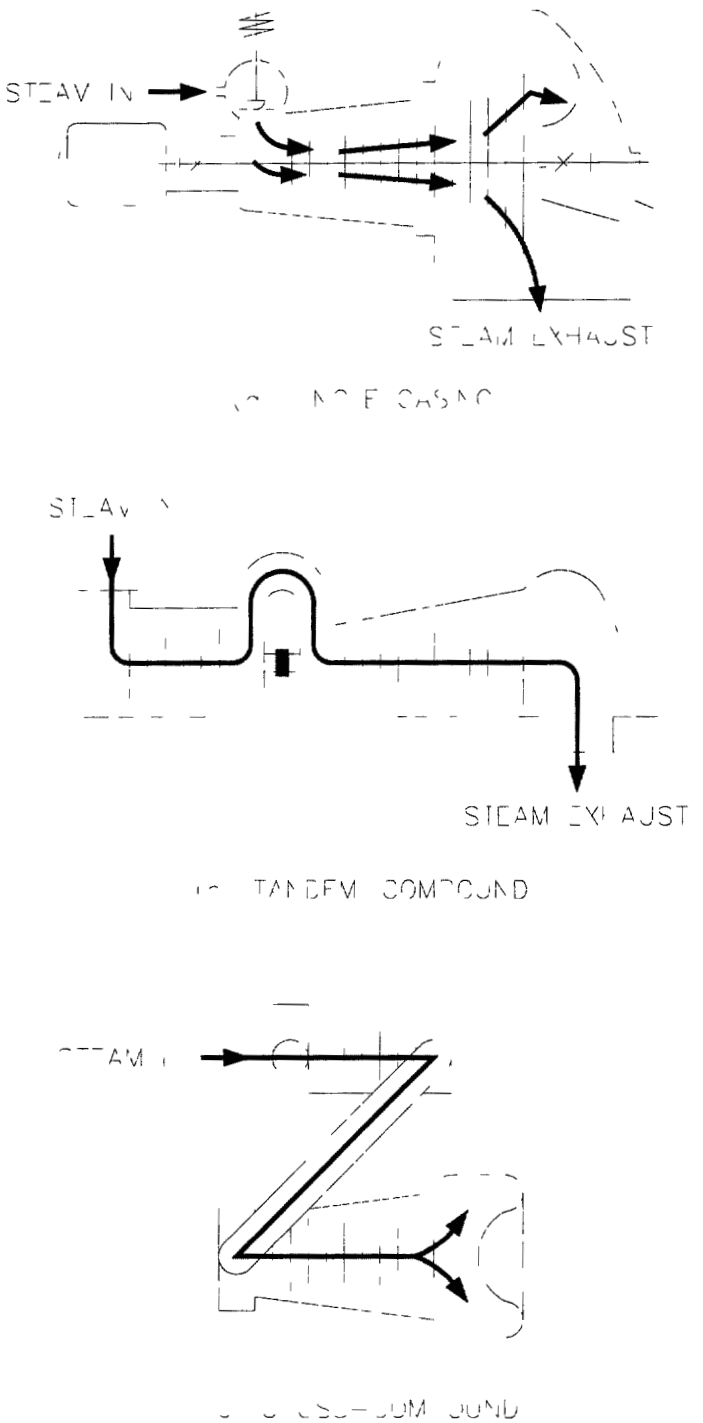

Figure 3-11 Comparison of Turbine Arrangements

186

A cross-compound turbine is shown in **Figure 3-11(c)** In this case, the different turbine sections are on different shafts For power plants, this means that two separate generators are used This can be an advantage for very large turbine generators since it may be easier to build and ship two half-size generators than one very large generator Some large cross-compound units have two or more turbine sections on each shaft, and thus they are a combination of cross-compound and tandem-compound

Nearly all large steam turbines are multiple casing units The tandem-compound arrangement is most common Cross-compound turbines are often designed for large units and in cases where the advantage in efficiency of a cross-compound unit over a tandem-compound can be justified

Exhaust Flows

Condensing turbines can be further classified by their exhaust flow A single-flow condensing turbine passes all of its exhaust steam to the condenser through one exhaust opening However, the low pressure sections of a large compound turbine become so large that they must be split up into more than one section because of design limitations Turbines with as many as six flows are not uncommon

3 1 4 Comparison Turbines Types and Manufacturers

There are as many different variations in steam turbines as there are manufacturers, and many manufacturers build different types of turbines as well This Section describes some of those differences with reference to the two large steam turbines manufacturers that have historically dominated the market in the United States, Westinghouse and General Electric There are some key differences in the design of impulse and reaction staging that are important in understanding other design features of the turbine

General Electric (GE) turbines are mostly impulse turbines while Westinghouse turbines are principally reaction turbines The reason for this is historical In the early history of the turbine-generator business in the United States, GE bought rights to the patent for the impulse turbine from C G Curtis and Westinghouse bought rights to

the reaction turbine from Sir Charles Parsons Those patents have, of course, long since expired Both Westinghouse and GE now build turbines that incorporate both reaction and impulse features It is still true, however, that GE turbines are principally of the impulse design and most Westinghouse turbines are principally the reaction design A comparison of the two designs is useful in understanding how steam turbines work

Aerodynamic Efficiency

The first difference between the two designs is in aerodynamic efficiency The aerodynamic efficiency of the impulse stage is less than that of the reaction stage but the reaction stage efficiency falls off sharply when it is not in operation at its design point Aerodynamic efficiency becomes more important as a design consideration as the stage becomes longer (as is the case in the low pressure turbine)

A consequence of these differences in efficiency is seen in the first stage of many Westinghouse turbines The first stage of the turbine is one in which the conditions under which the turbine conditions change considerable over the range of operation because the valves used to control the flow of steam to the turbine open just ahead of the first stage nozzles The first stage turbine buckets (or blades) are the shortest in the turbine Accordingly it is common for Westinghouse turbines, that are principally reaction otherwise, to have a Curtis stage (also sometimes referred to as the control stage) as the first stage in the turbine

In GE turbines, on the other hand, the last stage buckets are as long as those in Westinghouse turbines Since, for long buckets, a pure impulse design would have a performance penalty due to aerodynamic losses, most GE turbines have a significant degree of reaction in the long buckets of the LP turbine

Number of Stages

Another difference between the impulse and reaction designs is the amount of energy that can be absorbed in a single stage The impulse design can absorb more energy than the reaction stage The consequence of this fact is that more stages are required in a reaction turbine as compared to the impulse design For units that have the same initial steam conditions more stages are required in a reaction turbine than a comparable impulse turbine For example, in a plant with two sister units, one

Westinghouse and the other GE, both rated at about 300 MW and both operating with the same steam conditions, the GE unit has 22 stages while the Westinghouse unit has 37 stages

Stage Design

As described earlier, all of the pressure drop in the impulse turbine is (ideally) across the stationary nozzles In the reaction design, the pressure drop is split between the stationary and moving nozzles The consequence of this fact is the nozzles in the GE design are rather massive while the buckets are relatively less massive In the Westinghouse design the stationary and rotating blades are of roughly equal strength This is illustrated in **Figure 3-12** **Figure 3-12 (a)** shows the reaction stage while **Figure 3-12(b)** shows the impulse stage The stationary nozzles of the impulse design are in fact rather massive In fact, when one looks down at the horizontal joint of the impulse turbine, the buckets appear to be running in a compartment formed by adjacent nozzles The impulse turbine is sometimes said to be "compartment design" as a result

There are two other differences in design illustrated in **Figure 3-12** First, note that the labyrinth seals for the impulse design are concentrated at the inside diameter of the nozzle with relatively little at the tips of the buckets This is consistent with the fact that there is little tendency for steam to leak past the tip of the bucket since there is little pressure drop there On the other hand there is a large pressure drop across the nozzle and so seals with many teeth are required to seal the inside diameter of the nozzle

The second difference in the two designs illustrated by **Figure 3-12** is the balance hole in the wheel of the impulse turbine Labyrinth packing does not prevent all leakage, it can only control and reduce leakage Thus, there is some leakage of steam into the wheel space Also, there is some steam which leaks by the root of the bucket If there were no balance hole, the steam would build up pressure on the upstream side of the wheel This would produce axial force on the wheel (discussed below) The steam would also tend to flow from the wheel space through the bucket at a right angle compared to the rest of the steam flow, thus disturbing the steam flow and reducing efficiency The balance hole prevents this flow from occurring

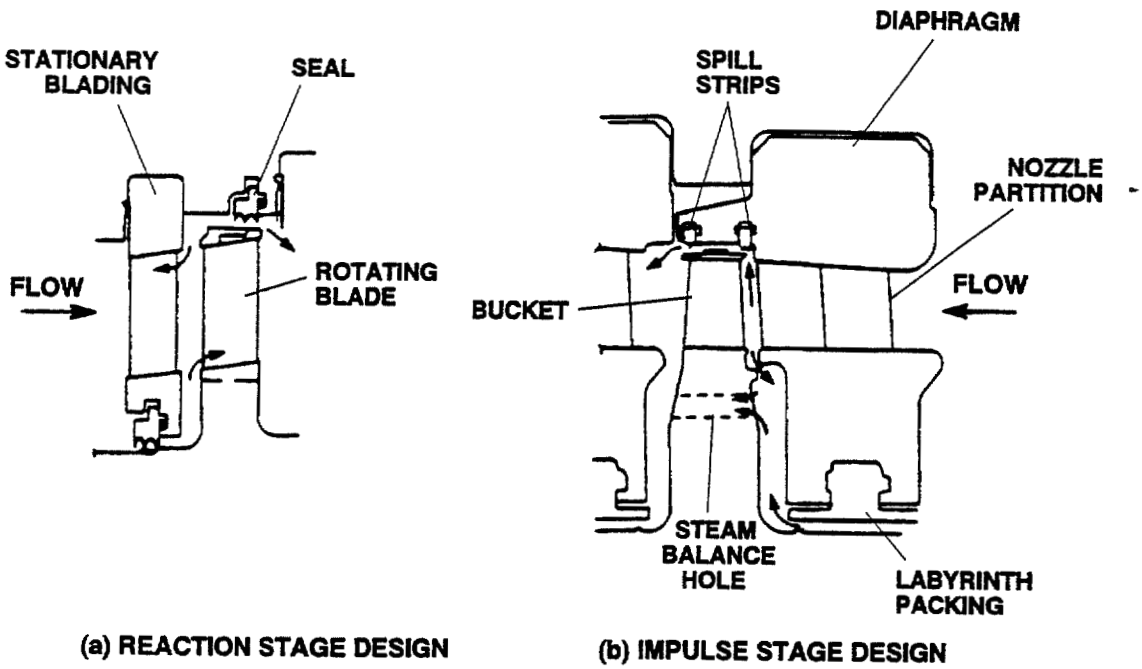

Figure 3-12 Comparison of Reaction and Impulse Stage Designs

190

There is no balance hole in the reaction stage, of course, since there is a pressure difference across the moving blades by design A balance hole in the reaction stage would bypass steam from its normal flow path

Thrust

A difference between the reaction turbine and the impulse turbine results from the changes in pressure that the steam undergoes as it passes through the turbine In the impulse turbine all of the change in steam pressure occurs in the stationary nozzle and none in the moving buckets Ideally, there is no axial force on the impulse turbine rotor because there is no pressure drop across the moving buckets

In the reaction turbine, however, a pressure drop occurs across the moving nozzles as well as the stationary nozzles The result is that there is an axial force on the moving nozzles due to the difference in pressure on the upstream and downstream sides of the moving nozzles This in turn produces an axial force, or thrust, on the turbine rotor

There are several ways in which the turbine designer can deal with this thrust One way is to simply design the turbine with a very large thrust bearing This is undesirable for a number of reasons including the high cost associated with such a bearing

A common means of dealing with the high thrust on the reaction turbine rotor is to build a double flow turbine section In such a turbine section the steam flow is divided into two equal flows as it enters the turbine The two steam flows then pass through two half-sized turbine sections that are oriented in opposite directions on the same turbine rotor as shown in **Figure 3-13** The thrust produced in the two half-sized turbine sections is equal and opposite Therefore, in the double flow turbine section there is no net thrust

Both Westinghouse and GE use the double flow design, especially in the low pressure turbine where the turbine blades or buckets are relatively long This is because even in GE turbines, there is reaction in the low pressure turbine buckets and thus thrust on the rotor

191

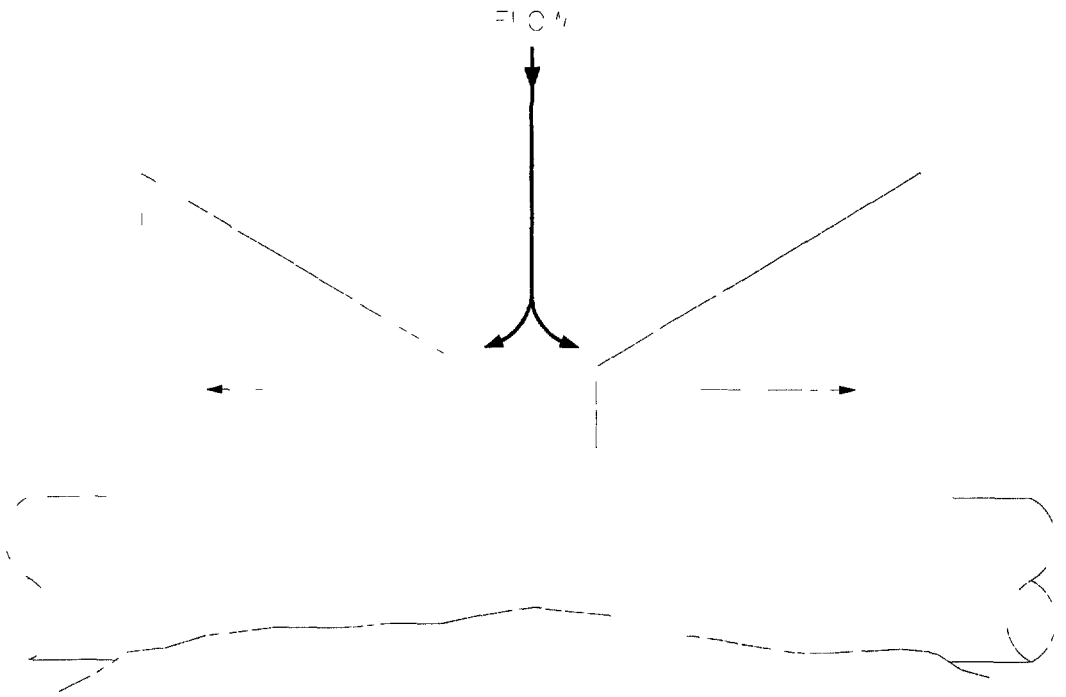

Figure 3-13 Simplified Double Flow Turbine

A variation on the double flow turbine section is the opposed flow section In the opposed flow turbine section one half of the turbine stages are oriented in one direction on the turbine rotor while the remaining turbine stages are mounted on the same rotor but oriented in the opposite direction as shown in **Figure 3-14**

It would appear that the opposed flow design would eliminate thrust in the same way that the double low turbine section does This is not the case, however, because the pressure in the various stages changes with load Thus, if the opposed flow section is designed to have balanced thrust at full load, it is unbalanced at reduced load As a result, most reaction turbines that employ opposed flow sections have balance pistons (which are discussed next) Both Westinghouse and GE use the opposed flow section design

The last method of dealing with reaction turbine thrust is the balance piston- A balance piston is a drum like section machined on the turbine rotor Labyrinth packing is installed at the outside diameter of the drum to make it possible to maintain a high pressure on one side and a low pressure on the opposite side as shown in **Figure 3-15** The axial force on the balance piston caused by the pressure differential can be used to counterbalance the thrust from a reaction turbine section

There are many other differences between GE and Westinghouse turbines, especially in nomenclature These differences are noted in the remaining section of this text

3 2 Turbine Centerline Components

This section describes the major components of the steam turbine that are on the turbine centerline such as the turbine casings and rotors, as well as the important supporting components such as standards and bearings Major steam turbine valves and supporting systems are described later

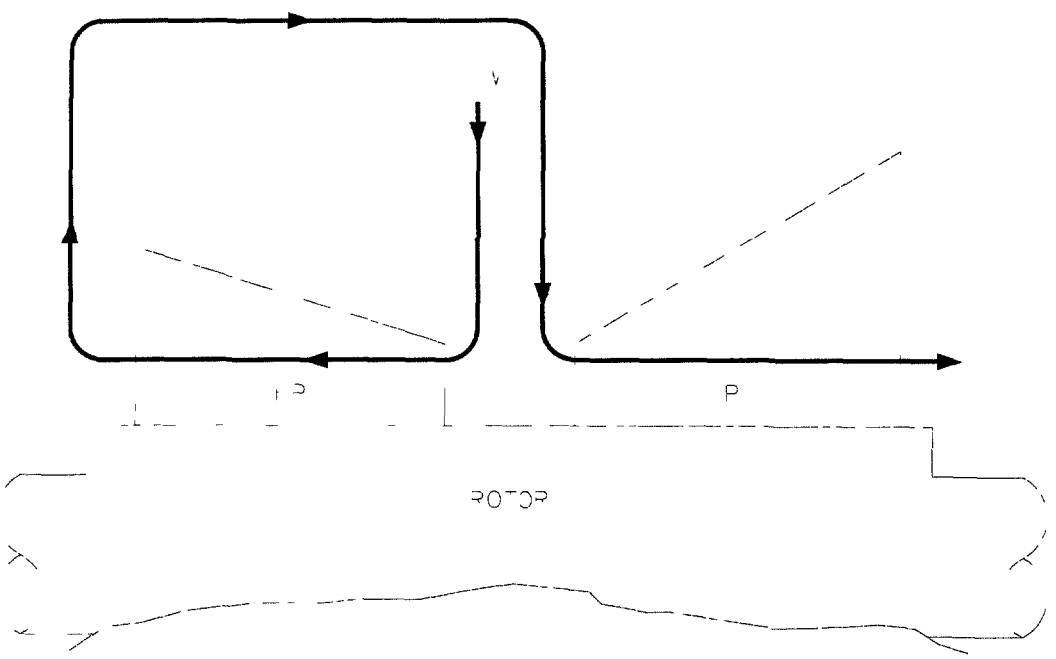

Figure 3-14 Simplified Opposed Flow Turbine

194

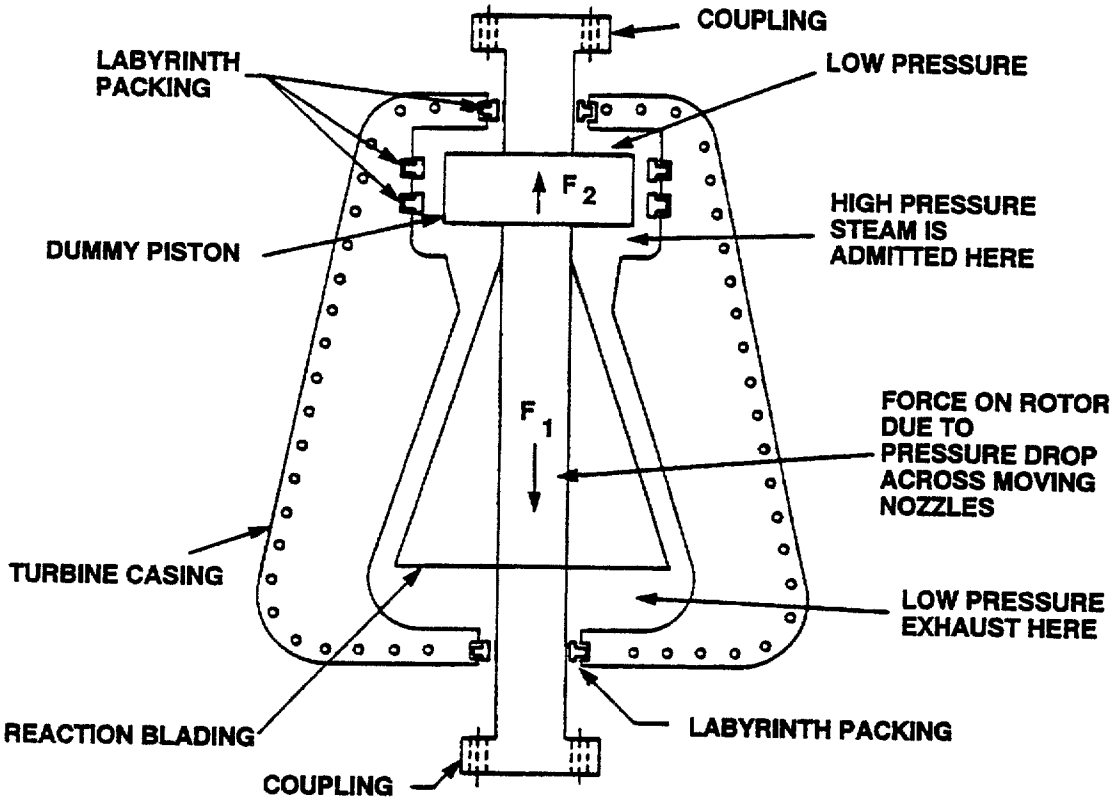

Figure 3-15 Simplified Balance Piston Arrangement

195

3 2 1 Turbine Casings

The function of the turbine casings is to keep steam in the turbine and the air out of the turbine The casings also support the stationary internals of the turbine and hold those parts in alignment with the rotor Westinghouse often refers to the turbine casings as cylinders GE usually calls cast turbine casings shells and fabricated sections casings

Turbines that are more than about 50 MW usually have multiple turbine sections Each turbine section has a separate casing Most large steam turbines are reheat turbines The turbine sections commonly seen in reheat turbines are the High Pressure (HP) turbine section, the Intermediate Pressure (IP) turbine section and the Low Pressure (LP) turbine section Although some large steam turbines have completely separate HP and IP turbine sections, a common arrangement has the HP and IP turbine sections in an opposed flow turbine section **Figure 3-16** shows a cross section through a typical HP-IP opposed flow turbine section

Another common feature used in large steam turbines from about 75 to 350 MW is a single double flow LP turbine A cross section through a typical double flow LP turbine section is shown in **Figure 3-17**

Units that are smaller than about 200 - 300 MW usually have integral steam chests The steam chest is a chamber in which the governor or control valves are installed (steam chests are discussed in more detail later in this Section) When the turbine is larger than about 300 MW, the steam chest and shell become so large that it is no longer reasonable to mount the steam chest on the shell For large units, therefore, the steam chest is separate from the turbine shell

The HP and IP turbine casing(s) are castings while the LP turbine casing(s) may be either a casting or a fabrication The HP and LP turbine casings are both split at the horizontal joint For some smaller units, usually when there is a single flow LP turbine, there is a machined vertical joint between the HP or IP and LP turbine casings that is assembled during the initial installation of the turbine

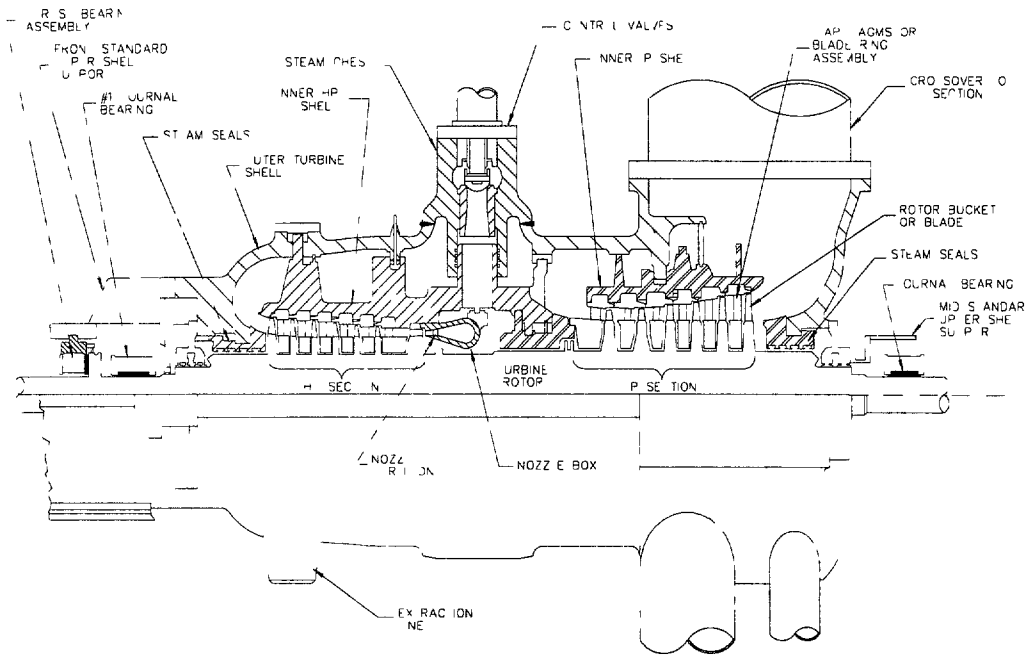

Figure 3-16 Simplified HP-IP Opposed Flow Turbine Section

197

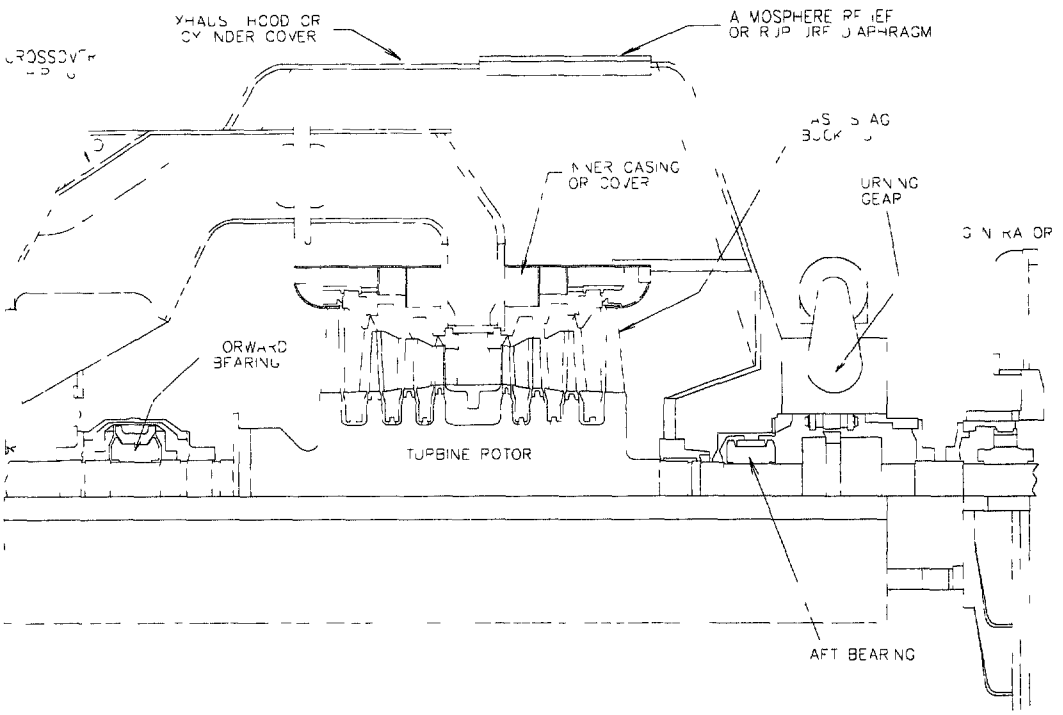

Figure 3-17 Simplified Double Flow LP Turbine Section

198

Most units that operate at pressures of 1500 to 1800 psig or more have double walled construction In double wall construction, there is an inner shell or cylinder that is supported and located by the outer shell or cylinder This construction is used in the HP-IP opposed flow section shown in **Figure 3-16** Double walled construction is advantageous because it reduces thermal stress Thermal stress is reduced with double walled construction because the temperature differential across each wall is less then over a single wall Double walled construction also reduces thermal stress because the walls are thinner in double walled than single walled construction

The HP and IP turbine casing(s) supports and positions the internal components of the HP and IP turbine sections, including the diaphragms (GE nomenclature) or blade rings (Westinghouse nomenclature), packing heads (GE nomenclature) or gland rings (Westinghouse nomenclature), and labyrinth seals The casing(s), as well as other internal components, has a bolted joint at the horizontal centerline to permit assembly of the internals

The casing(s), as well as the internal components, are supported at the horizontal centerline and are free to expand vertically both upward and downward from the centerline Similarly, these components are all keyed at the transverse centerline and are free to expand from the centerline in the transverse plane This support arrangement assures that radial alignment is maintained over the entire range of operating conditions as the turbine components expand and contract

The turbine is also be designed to accommodate axial expansion It is not unusual for a turbine to experience almost 1/4 to 1/2 inch of growth (at the front standard/pedestal) from ambient to operating temperatures Axial thermal movement is usually accommodated through the use of sliding pedestals (or standards) With sliding pedestals, the end of the HP turbine casing opposite the generator (usually called either the turbine end or the governor end) is supported by a pedestal that is free to slide axially within the range of thermal movement of the casing Free axial movement is assure through the use of special, low friction grease plates that are lubricated through grease fittings Transverse alignment is maintained by closely fitted keys between the front pedestal foundation plate and the bottom of the pedestal

Another method of dealing with thermal expansion is through the use of flexible supports The flexible supports are usually a series of flat steel plates that support the LP end of the turbine The flat plates bend slightly to accommodate growth

The HP and IP casing(s) is covered with insulation in normal operation to minimize heat loss Appearance lagging is installed over most of the turbine Appearance lagging is to the turbine what the body of a car is to the frame and engine

The LP turbine casing has an inner casing and an outer casing or cylinder The outer casing is often called the exhaust hood The outer casing prevents air from entering the turbine exhaust and condenser and directs the steam from the turbine exhaust to the condenser The inner casing or casing supports and positions the LP turbine internals This inner casing is located inside the exhaust hood As with the HP turbine section, the support of the components in the LP turbine is at the horizontal centerline and they are keyed at the transverse centerline to assure that alignment is maintained throughout the range of operating conditions

The LP turbine has inner and outer casings or cylinders The outer casing prevents air from entering the turbine exhaust and condenser and directs the steam from the turbine exhaust to the condenser The outer casing is generally referred to as the exhaust hood The inner casing supports and positions the LP turbine internals This inner casing is supported and positioned inside the exhaust hood

The exhaust hood is supported on foundation plates by "feet " The "feet" are actually flange like extensions of the fabrication that extend all around the outside circumference of the lower half of the exhaust hood There are keys at the transverse centerline that anchor the exhaust hood axially Gib keys at the ends of the lower exhaust hood maintain transverse alignment while allowing axial movement to accommodate axial expansion at the ends

The LP turbine experiences much less thermal movement than the HP and IP turbines because it experiences relatively little temperature change in operation There is some movement, however, and the LP turbine is designed to accommodate that movement so that distortion of the turbine casing does no occur Accordingly,

200

the exhaust hood feet are fitted with grease fittings to lubricate the feet and so assure freedom of movement

The exhaust hood is usually connected directly to the condenser at the bottom, and so is under a partial vacuum in operation While some turbines are designed so that the steam can exit the LP turbine axially or at the side of the turbine, the usual arrangement is for the steam to exhaust axially from the LP inner casing into the exhaust hood, which "collects" the steam and directs it downward to the condenser beneath the LP turbine There is generally movement between the turbine flange and the condenser flange In most units this movement is accommodated by the use of a flexible expansion joint that is usually made of heavy but flexible rubber In other cases a stainless bellows or Phillips seal is used In the Phillips seal a knife edge is immersed in a seal trough that is filled with water When the knife edge is submersed, air cannot be drawn into the condenser The exhaust hood has one or more atmospheric relief diaphragms The atmospheric relief diaphragm serves the same function as a relief valve, it protects the LP turbine from excessive pressure A typical atmospheric relief diaphragm, a cross section of which is shown in **Figure 3-18**, has a diaphragm made of lead clamped around its circumference and supported by a grid underneath When there is a vacuum in the LP turbine section, the diaphragm is pulled downward against a grid When the pressure in the exhaust hood increases above about 5 psig (about 20 psia), the soft lead ruptures

3 2 2 Stationary Blades and Diaphragms

The stationary nozzles in turbines are designed and named differently depending upon the type of turbine and manufacturer For impulse turbines (typically GE) the stationary nozzles are generally referred to simply as nozzles and the airfoil sections of the nozzles are called partitions In reaction turbines the stationary nozzles are generally called stationary blades In either case, the stationary nozzles expand the high pressure steam to extract its energy and direct the resulting steam jets toward the rotating buckets or blades **Figure 3-19** shows a cutaway through a typical impulse turbine stage illustrating the arrangement of the stationary nozzles with respect to the buckets

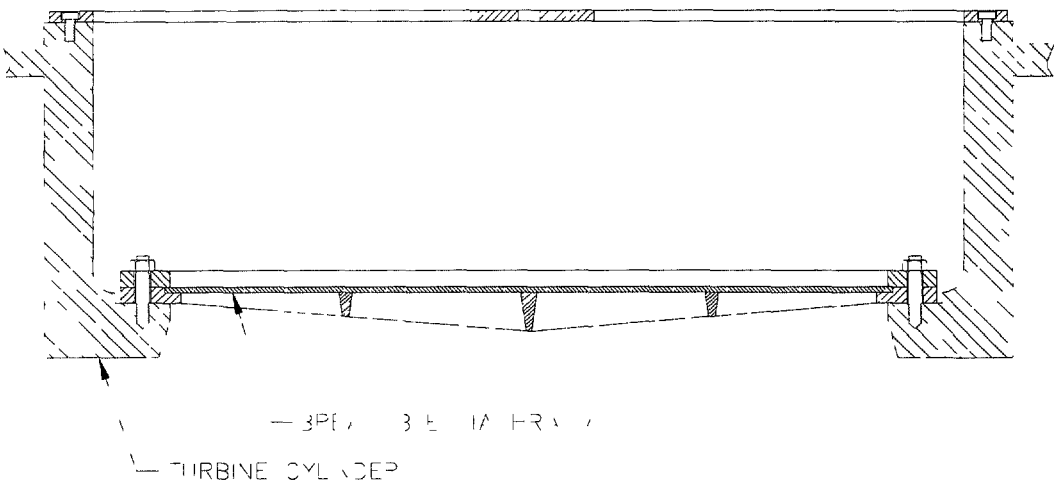

Figure 3-18 Typical Atmospheric Relief Diaphragm

202

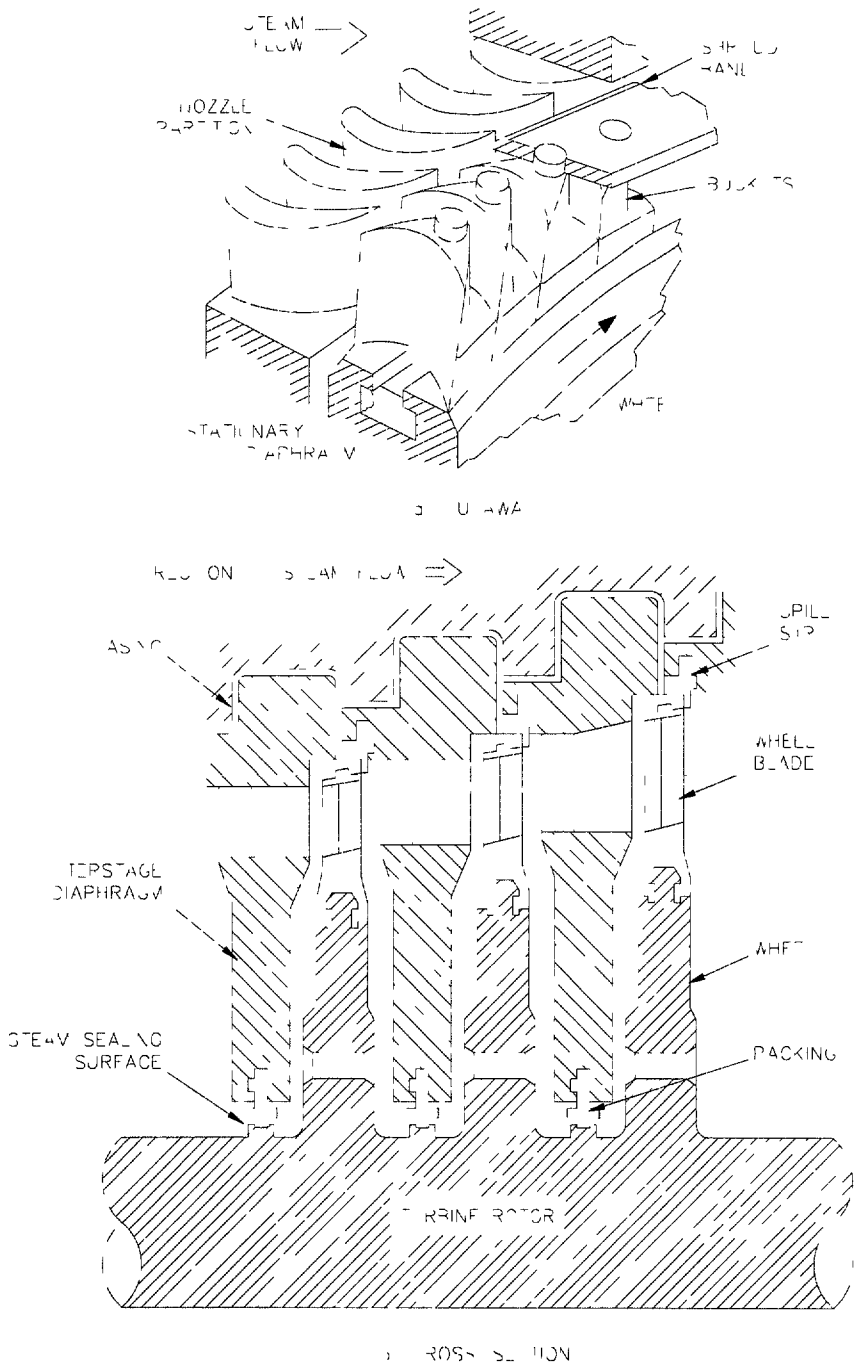

Figure 3-19 Arrangement of Nozzles and Buckets

203

The stationary nozzles in most impulse turbines are held in place in a disk-like structure that, together with the nozzle partitions, is called a diaphragm **Figure 3-20** shows a typical diaphragm The diaphragm fits into circumferential slots in the turbine casing inside diameter It is split at the horizontal joint for assembly There are labyrinth seals at the inside diameter of the diaphragm to reduce steam leakage between the rotor and the diaphragm and seal strips near the outside diameter to reduce leakage around the rotating blades tips

In reaction turbines the pressure drop of the steam is divided more or less equally between the stationary blades and the rotating blades Since there is a lower pressure drop across the stationary blades in the reaction turbine, the construction of the stationary blading can be much lighter In general, the stationary blading in a reaction turbine is installed in dovetail grooves machined on the inside diameter of the inner cylinders of the turbine as shown in **Figure 3-21** Thus, stationary blading for the reaction turbine is generally disassembled with the inner cylinder For most (if not all) stages in a typical reaction turbine, it is not possible to remove a stage of stationary blading by itself in the same manner as the impulse turbine with the diaphragm design

3 2 3 Turbine Seals

Seals are used to reduce and control the leakage of steam Leakage occurs between turbine stages inside the turbine and where the shaft penetrates the turbine casings The interstage seals, as they are called, are mounted on the inside diameter of the diaphragms and blade rings Seals which are used to seal the penetration of the rotor through the turbine casings or are mounted in gland rings (Westinghouse nomenclature) or packing heads (GE nomenclature) GE also refers to labyrinth seals as packing

The type of seals used in all large steam turbines are labyrinth seals A labyrinth seal is simply a ring with sharp teeth on the inside diameter that run very close (as little as 0 015 inch) to the sealing surface on the rotor The many teeth in the labyrinth seal present a difficult path for steam leakage It is important to understand that labyrinth seals do not prevent leakage by themselves, they only reduce or control leakage

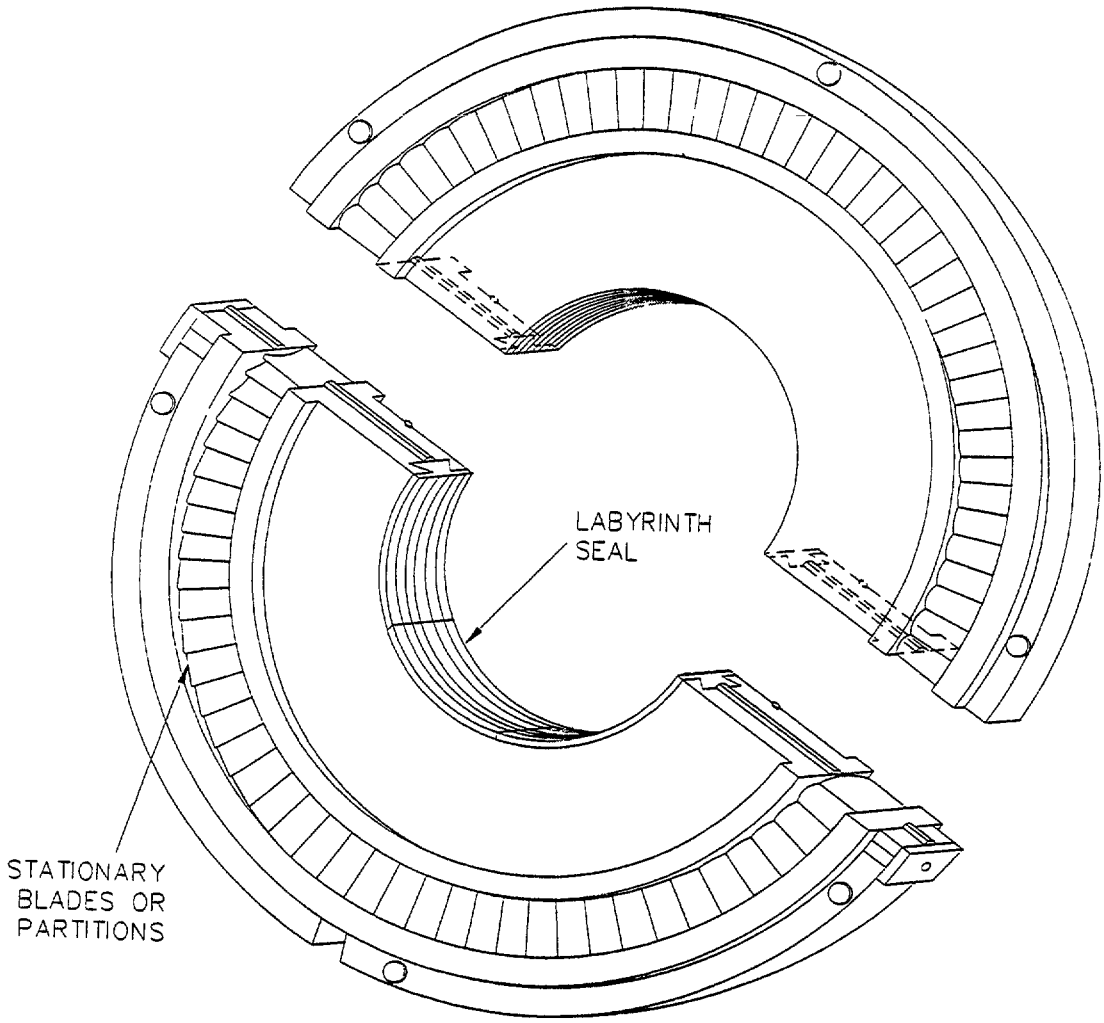

Figure 3-20 Simplified Diaphragm

205

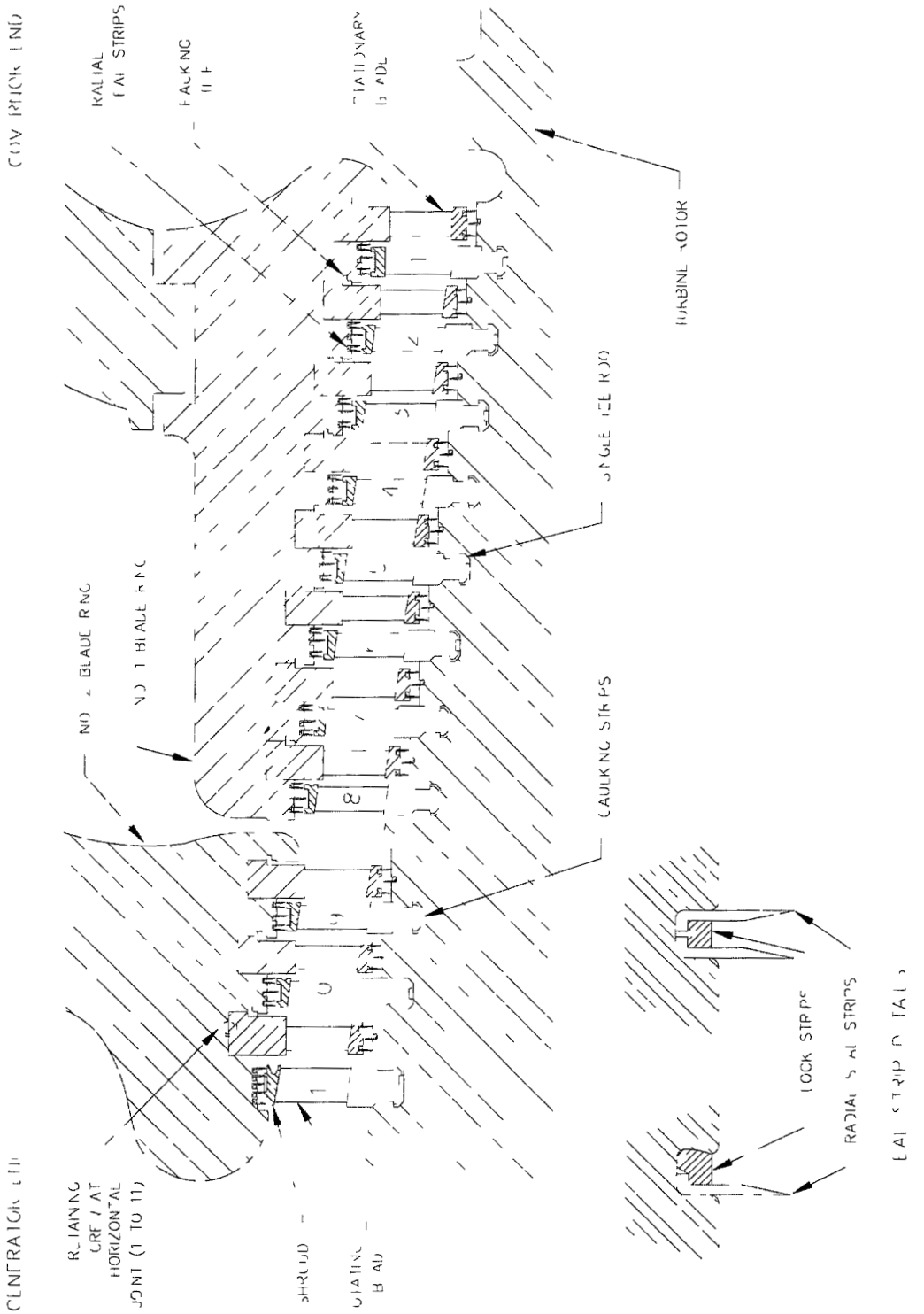

Figure 3-21 Typical Reaction Turbine Blading

206

There are many different arrangements for seals For applications where the pressure drop is small (such as the tips of impulse turbine buckets) there may be only a few teeth These seal teeth are caulked into a groove machined on the inside diameters of the turbine casing or diaphragm or machined on the outside diameter of the turbine rotor

In applications where there is a large pressure drop (such as the diaphragm in an impulse turbine), many teeth are required to limit the leakage flow and these teeth are installed on the inside diameter of a seal ring The seal ring is split into radial segments The number of segments depends on the diameter to be sealed, the larger the diameter, the more segments are used **Figure 3-22** shows a simplified cross section through a packing ring segment installed in its hook fit

The seal ring segments fit into a circumferential "hook fit" on the inside diameter of the diaphragm, seal head, or turbine casing Flat springs push the ring in the hook fit toward the rotor The spring backing is important because it allows the seal segment to move outward in the event that it is hit or rubbed by the turbine rotor This reduces damage to the seals that occurs when the turbine rotor rubs against the packing due to high vibration or misalignment

There are many variations on seal design In general the intent of these variations is to improve the effectiveness of the seals **Figure 3-23** shows high-low seals that have alternating teeth of smaller and larger diameter The high-low design is more effective than straight tooth packing because it presents a more difficult leakage path for the steam The disadvantage of high-low tooth packing is that axial rubbing between the seal teeth and packing lands occur when there is any significant axial misalignment

Another type of labyrinth packing used in areas where axial misalignment is likely to occur is called slant tooth packing The teeth, shown in **Figure 3-24** are slanted against the normal flow of steam This, like the high-low tooth packing, reduced the amount of steam flowing through the packing

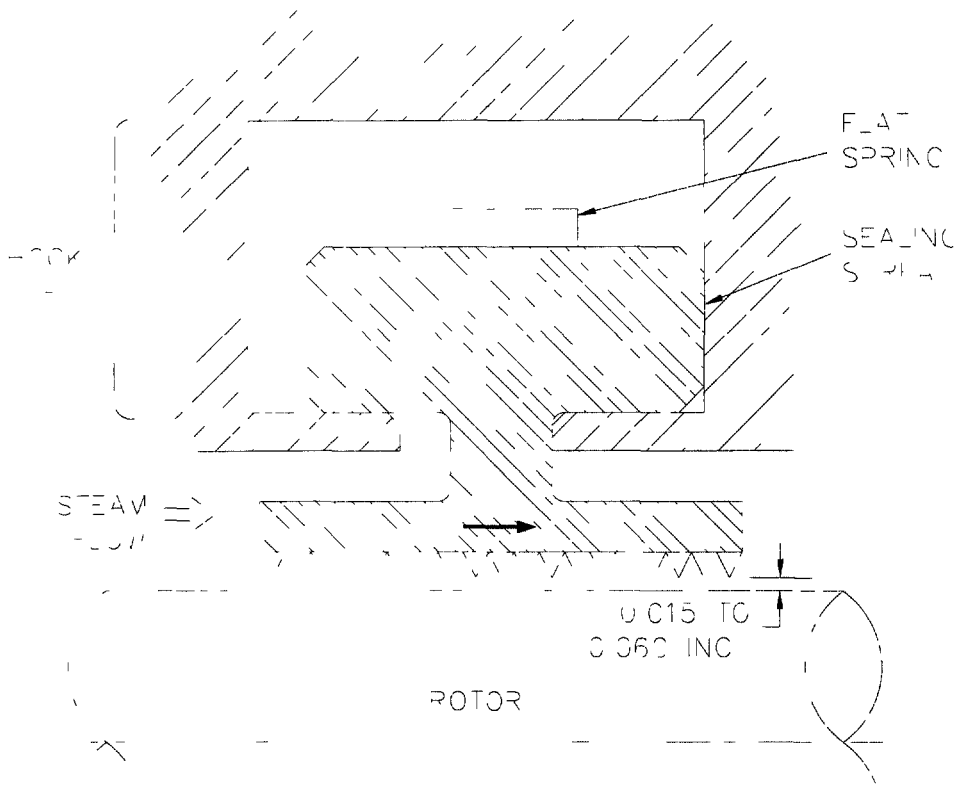

Figure 3-22 Simplified Labyrinth Packing Ring Segment

208

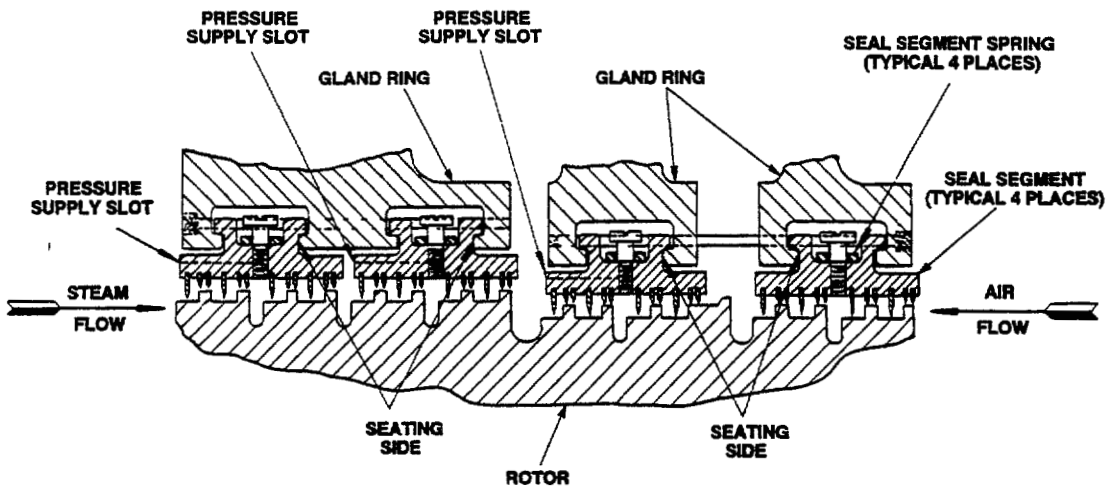

Figure 3-23 Typical High-Low Labyrinth Packing

209

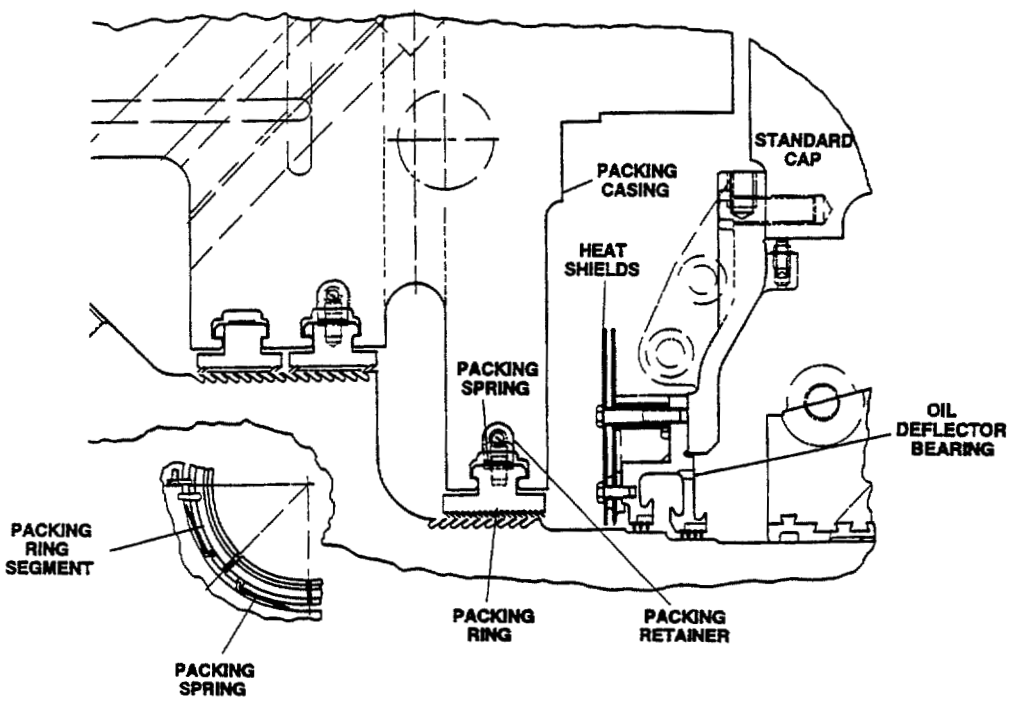

Figure 3-24 Typical Slant Tooth Packing

210

3 2 4 Turbine Rotors and Bucket/Rotating Blades

The turbine rotating blades work with the steam from the stationary blades to produce a torque on the rotor, or spindle as it is sometimes called The rotor holds all the rotating blades and transmits the rotating mechanical energy to the generator

Rotor Construction

The rotor itself is usually a single forging with a bore hole in the center, The bore hole is plugged to prevent water from becoming trapped in the bore hole Buckets or rotating blades are attached to the rotor either on wheels (typical of impulse turbines and LP sections of reaction turbines) or in dovetail grooves machined into the surface of the rotor (typical for the HP and IP sections of some reaction turbines Where wheels are used, they may be either disks that are shrunk onto the rotor or integral to the rotor forging **Figure 3-25** shows a cross section through a typical HP-IP opposed flow rotor with integral wheels

There are two variations on turbine rotor construction One is the elimination of the bore hole A turbine rotor without a bore hole is stronger than one with a bore hole Bore holes were used in the past to improve the "inspectability" of the rotor and to remove material in the bore where flaws were most likely to occur Improved non-destructive examination techniques and better forging technology allow for solid rotor construction

The other variation in rotors is welded construction Some European manufacturers manufacture rotors that are essentially a series of disks that are welded together

The rotor has critical speeds, that is, speeds where vibration increases substantially above normal because of resonance There are normally two critical speeds below running speed, and turbines are normally designed to operate between the second and third critical speeds to minimize vibration Operators must avoid prolonged operation at the rotor critical speeds during startup in order to avoid excessive vibration

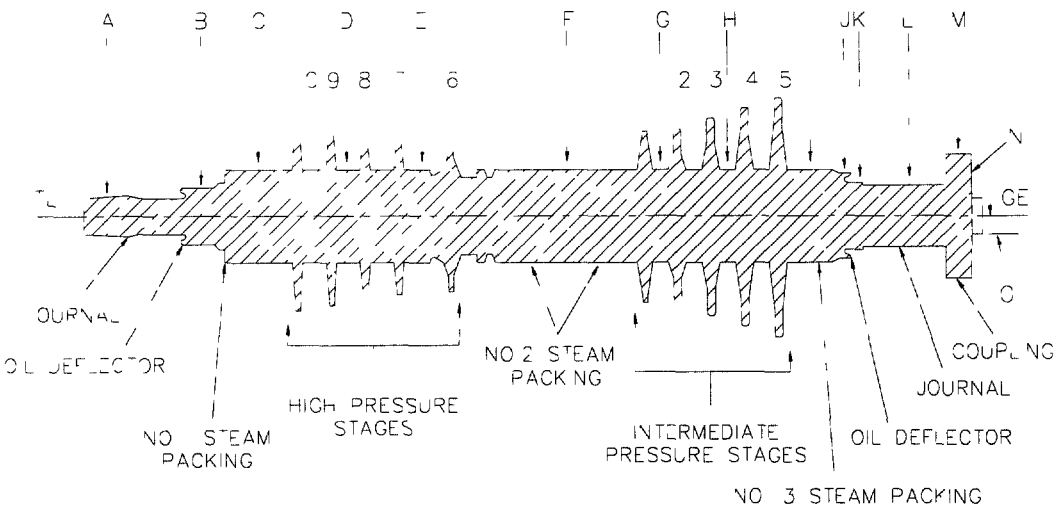

Figure 3-25 Typical Rotor Cross Section

212

The turbine rotor sags and temporarily bows if allowed to remain at rest, particularly at elevated temperatures A temporary bow can cause excessive vibration because the center of mass in a bowed rotor is not at the center of rotation Temperature stratification within the turbine casing with significant temperature differentials and distortion can also occur in a hot turbine with the rotor at rest This distortion can result in rubbing between the turbine rotor and stationary components The rotors are slowly turned by a turning gear to prevent this temporary bow and temperature stratification when the turbine is shut down

Bucket/Rotating Blade Construction

Rotating blades generally have the appearance of airfoil sections The rotating blades at the front of the turbine are rather short but become longer through the steam path to accommodate the increasing volume of the steam as it flows through the steam path

Figure 3-26 shows a typical T-root design on the left used by Westinghouse for attachment of all blades to the rotor except for the first stage and the last few stages of the LP turbine where an axial "fir tree" attachment is commonly used as shown on the right in **Figure 3-26** A pinned, axial fir tree design is used for the last few LP turbine stages

Figure 3-27 shows typical GE bucket assemblies such as that found for all but the last one or two stages Shroud bands are used on almost all stages of the turbine as shown in **Figure 3-27 (d)** The last one or two stages of the LP turbine use a flat finger style of attachment for the buckets as shown in **Figure 3-28**

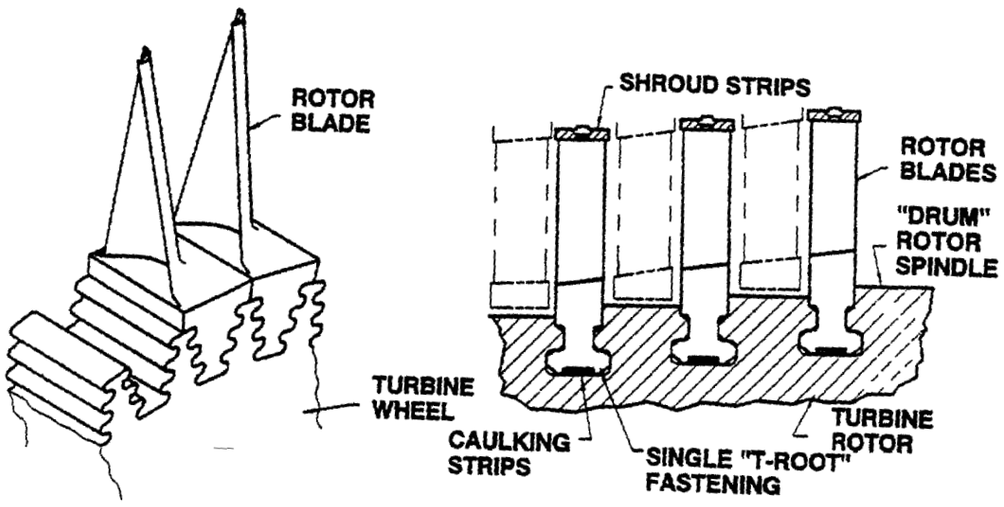

Figure 3-26 Typical Westinghouse Rotating Blade Attachment

214

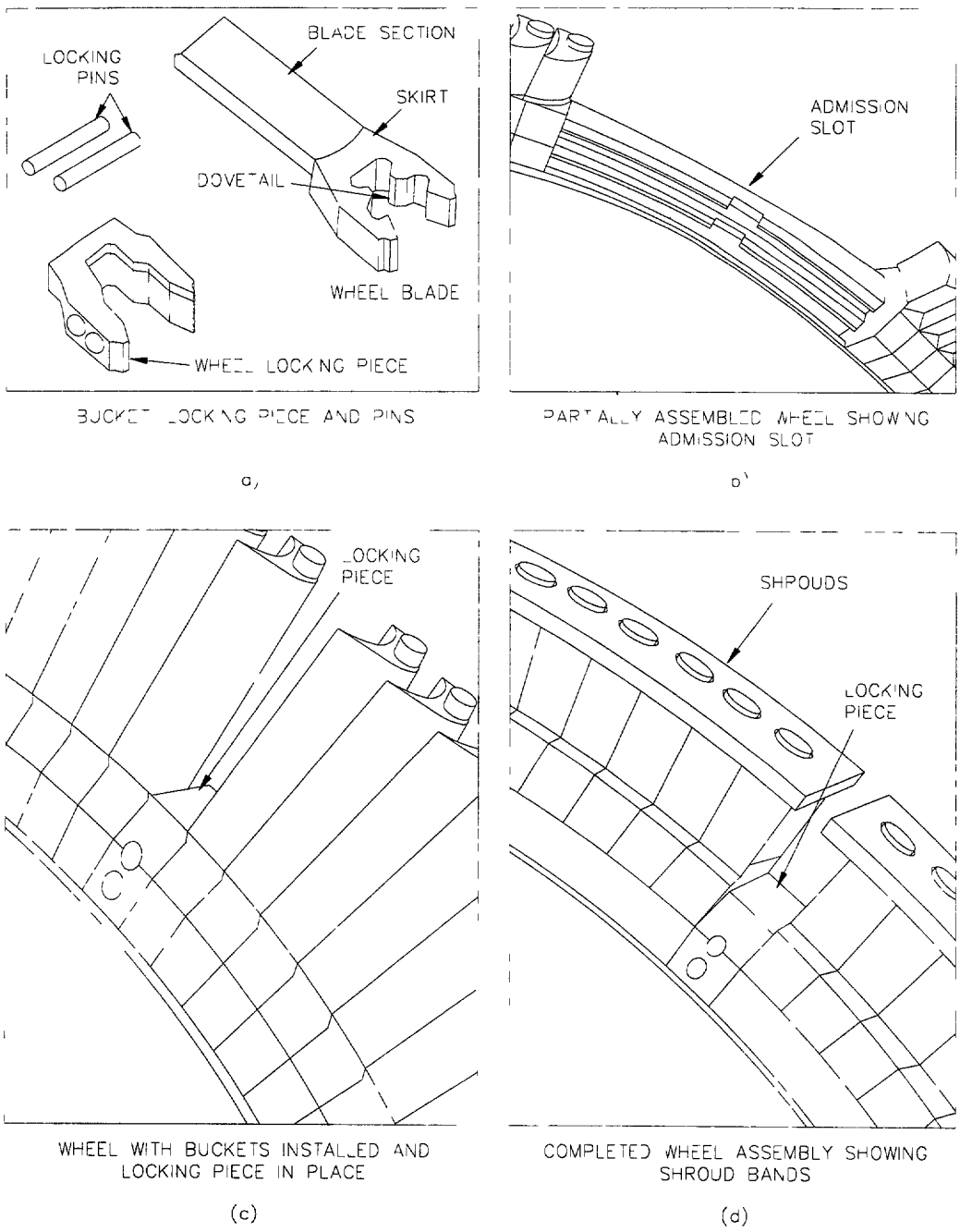

Figure 3-27 Typical GE Bucket Attachment

215

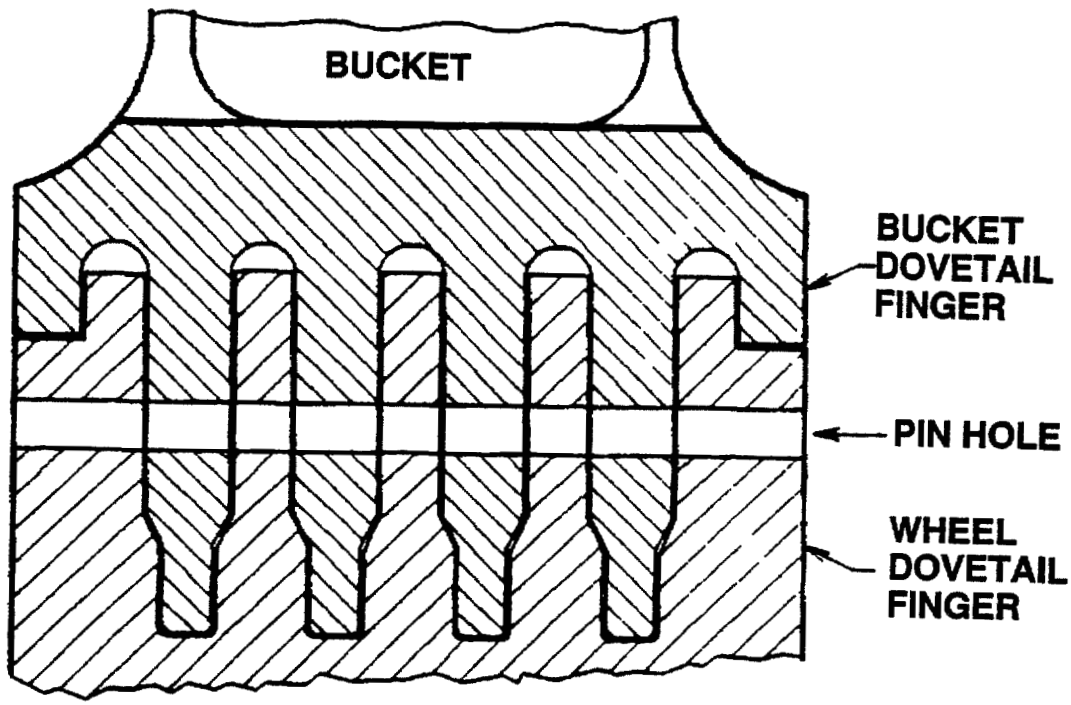

Figure 3-28 GE Flat Finger Bucket Attachment 3 2 5 Pedestals/Standards

216

Pedestals (Westinghouse nomenclature), which are also called standards (GE nomenclature), support the turbine casings and/or the turbine bearings The front pedestal also houses turbine controls and instruments in most turbines and so it is also sometimes called the governor pedestal The pedestals are filled with oil mist from bearing lube oil and lube oil used for other purposes such as coupling cooling Large drains in the bottom of the pedestal drains oil back to the lube oil tank Oil seal rings (Westinghouse nomenclature) which use labyrinth teeth similar to steam seals are used to prevent leakage of oil through penetrations for the turbine rotor Oil seal rings are also called oil deflectors (GE nomenclature)

As mentioned earlier, the governor pedestal is mounted on a foundation plate at the front of the turbine where it supported the turbine end of the HP turbine casing The other standard is an integral part of the generator end of the exhaust hood and supports only the bearing because the exhaust hood has its own support- **Figure 3-29** illustrates the arrangement of typical turbine pedestals

The turbine casing and rotor expand considerably when they heat up from room temperature to operating temperature Accordingly, as described earlier, the governor pedestal is designed to be able to slide on its foundation plate when the turbine heats up and expands or cools and contracts It is important to keep the governor pedestal greased to make this thermal growth smooth and even Grease fittings are provided for this purpose If the pedestal does not slide evenly and becomes cocked, misalignment and vibration can result

The governor pedestal supports the #1 bearing For many units, the thrust bearing is also located in the front pedestal and the thrust bearing is sometimes integral to the #1 bearing This location of the thrust bearing is important because it means that the turbine rotor is pulled towards the turbine end of the machine as the turbine casing heats up and expands This helps to minimize axial movement of the rotor with respect to the turbine at the generator end of the turbine

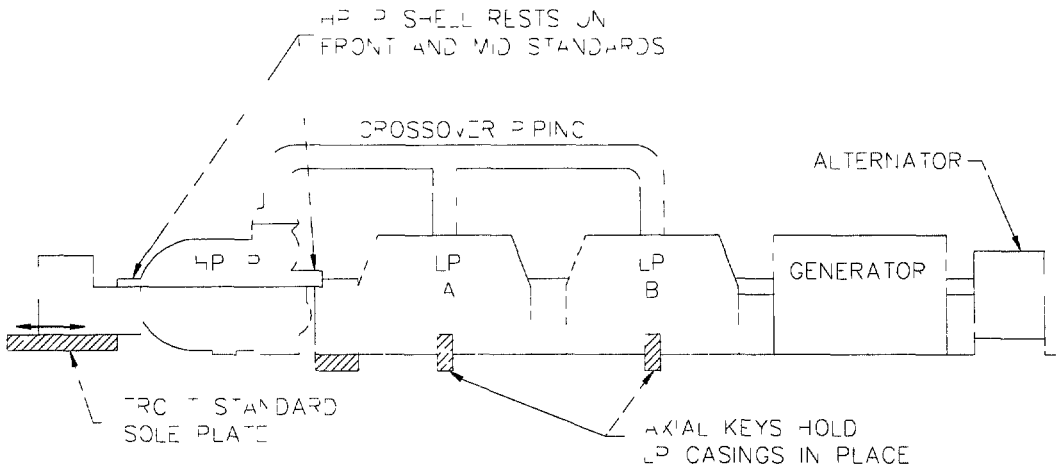

Figure 3-29 Typical Turbine Pedestal Arrangement

Turbine control components and related hydraulic components are often located in the governor pedestal, hence its name Perhaps the most important of these components is the speed transducer that is used to sense speed for the turbine control system Another important component is the emergency overspeed governor that most units have installed on the rotor in the governor pedestal Finally, the lube oil system main oil pump is often housed in the governor pedestal

Pedestals in the vicinity of the LP turbines are generally integral to the lower, LP turbine exhaust hood The pedestal is supported on its own foundation plate which accommodates the relatively small movement that it experiences in operation The bearing pedestal supports the bearing and houses the coupling between the turbine and generator For some turbines, the turning gear, the differential expansion detector and speed pickups may also be located in these bearing pedestals These devices are discussed later in this Module

3 2 6 Bearings

Bearings support and/or properly position the turbine rotor with respect to the stationary turbine parts There are two types of bearings, journal or radial and thrust The journal or radial bearings support the weight of the rotor and position it radially The thrust bearing absorbs axial forces on the rotor and positions the rotor axially with respect to the stationary turbine parts The generator also uses journal bearings which are the same design as those used for the turbine

Journal Bearings

Nearly all steam turbines use journal bearings instead of ball or roller bearings Journal bearings have a smooth surface of a soft material called babbitt The bearings are fed with oil, as the rotor turns, it produces a pumping action that builds up pressure and a film of oil between the journal surface and the babbitt so that in normal operation the surfaces never touch **Figure 3-30** shows the pressure distribution of the oil in the bearing

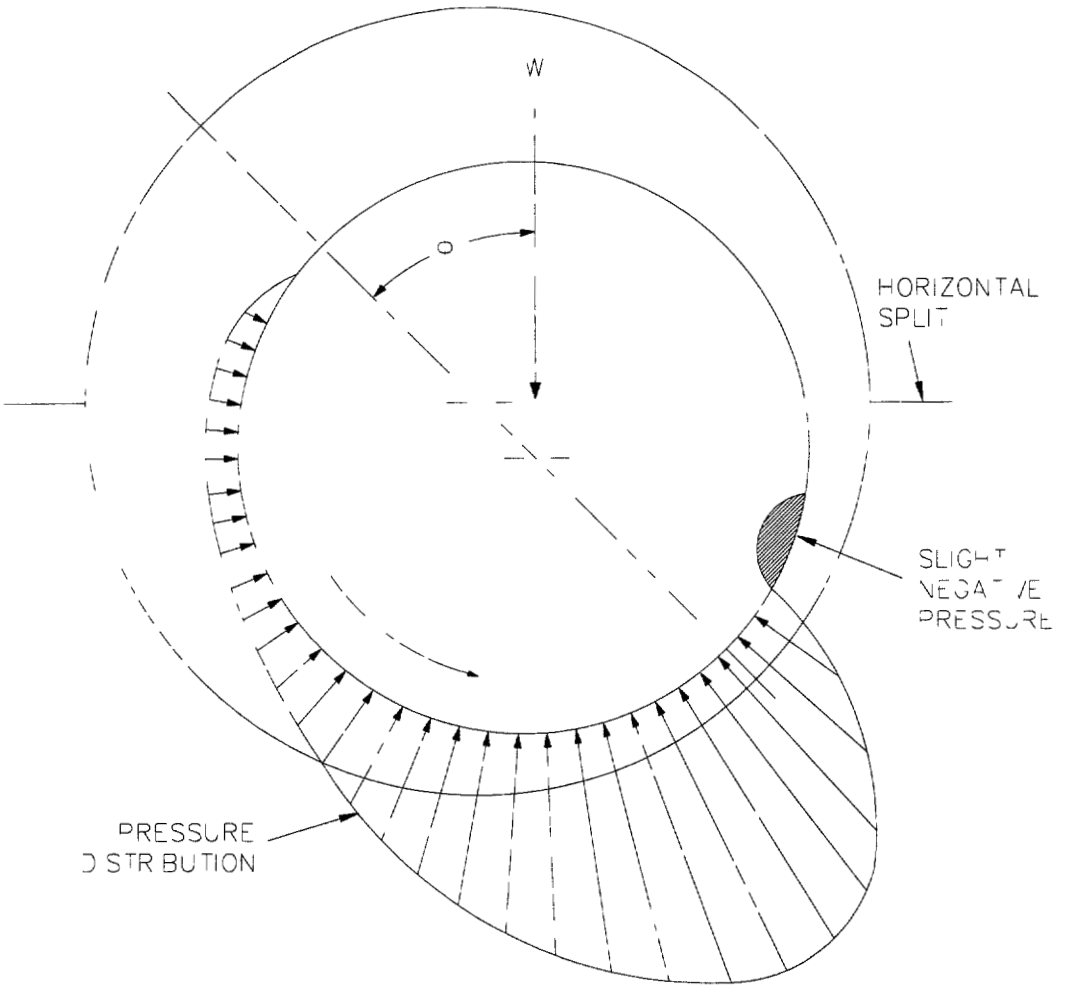

Figure 3-30 Journal Bearing Oil Pressure Distribution

220

A journal bearing is also called a sleeve bearing It is simply a cylinder of babbitt cast into a cylindrical steel liner Babbitt is a soft alloy, typically lead, tin and antimony, which is softer than the steel journals to avoid damage to the journals The journal bearing is split at the horizontal joint for assembly and fits into a circumferential slot or fit in the standard or pedestal In many cases there is a bearing ring between the standard fit and the bearing **Figure 3-31** shows a simplified drawing of a journal bearing arrangement

Figure 3-32 shows a cross section through a typical Westinghouse journal bearing Oil is fed to the bearing through holes in the support which connect pads with feed holes in the bearing pedestal which are in turn connected to the lube oil header Oil drains out of the ends in this bearing design

There can be a problem with cylindrical journal bearings related to bearing instability A phenomenon related to the dynamics of the oil film between the bearing and the rotor causes high pressure in the film which forces the rotor up against the inside of the bearing, resulting in high vibration GE uses a modified version of the cylindrical bearing to improve stability In this design the horizontal diameter is machined to a diameter that is just a little greater than the vertical diameter of the rotor journal (perhaps 0 015 inch for a 12-inch diameter rotor) Since the vertical diameter is smaller than the horizontal diameter, this type of bearing is called an elliptical journal bearing **Figure 3-33** shows a typical GE elliptical bearing Westinghouse does not use elliptical bearings

Occasionally, there is a stability problem even with elliptical journal bearings This occurs most often for bearings which are relatively lightly loaded, such as the HP and IP turbine rotors To solve this problem, both GE and Westinghouse utilize a bearing design which is even more stable than the elliptical bearing This is called the tilting pad bearing because the bearing inside diameter is broken up into tilting pads **Figure 3-34** shows a cross section through a Westinghouse tilting pad journal bearing Typically there are two or three pads on the lower half and the same number on the upper half The pads can pivot on an axis parallel to the turbine rotor align themselves to the rotor journal and break up the oil film Tilting pad bearings are typically used only for the relatively light HP and IP turbine rotors They are not used for all of the bearings because they are more complicated and have greater losses than elliptical journal bearings

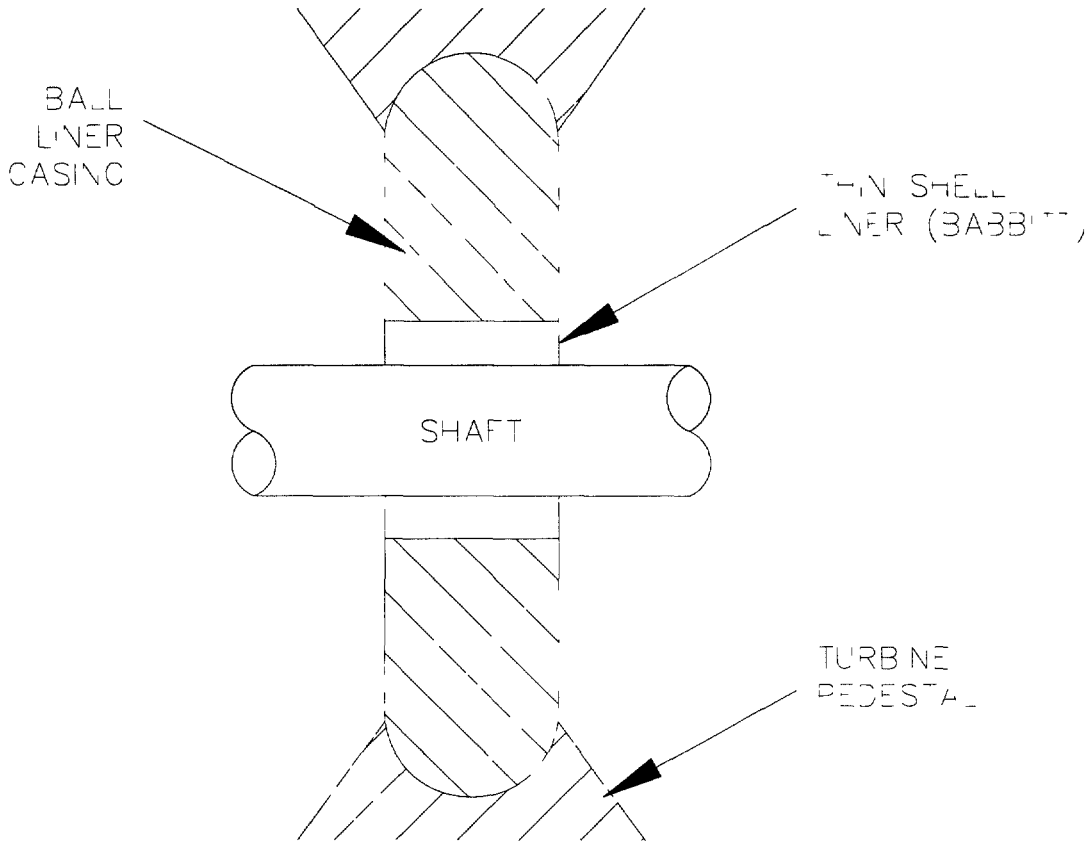

Figure 3-31 Simplified Journal Bearing Arrangement

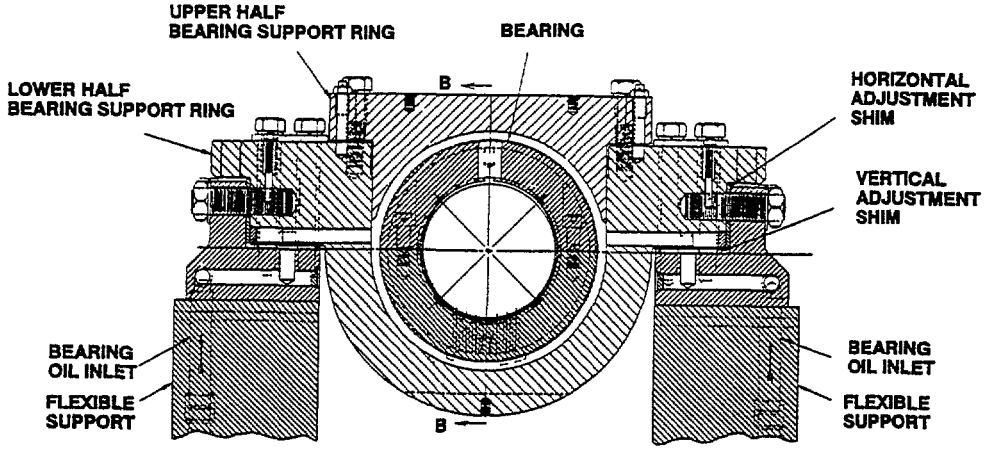

Figure 3-32 Typical Westinghouse Journal Bearing

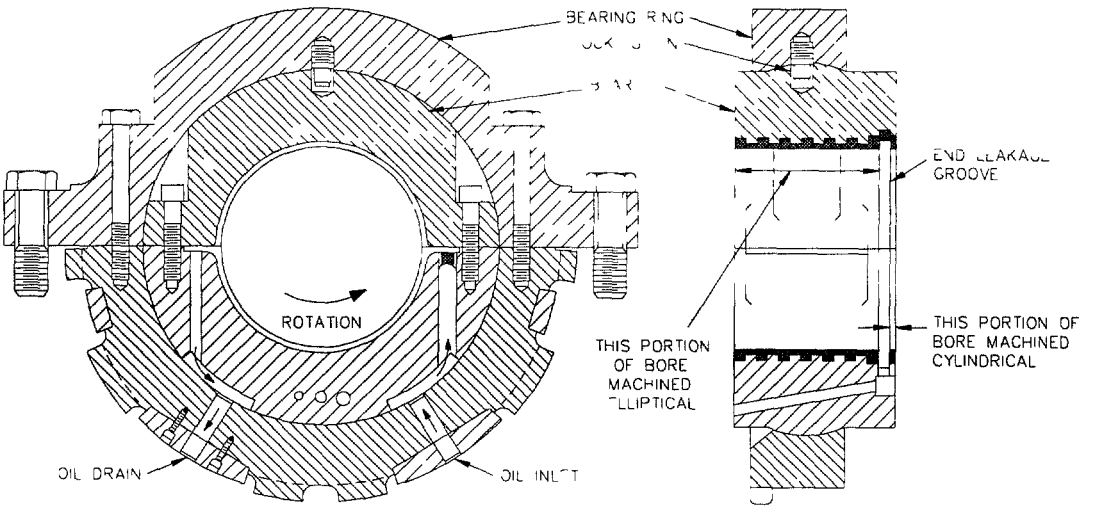

Figure 3-33 Typical GE Elliptical Journal Bearing

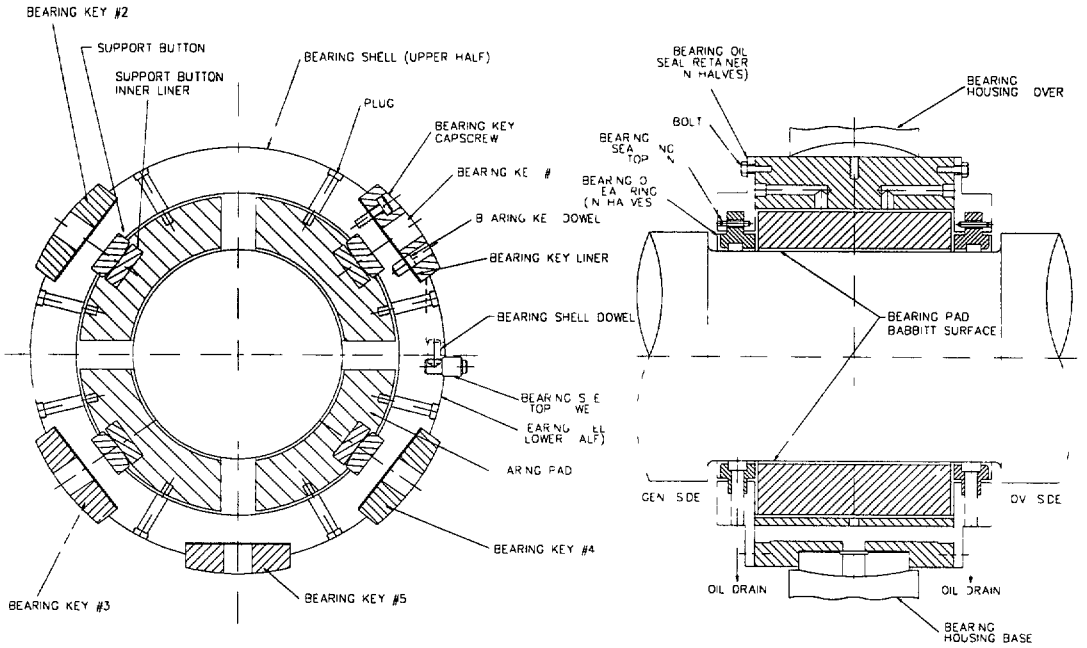

Figure 3-34 Typical Westinghouse Tilting Pad Bearing

Thrust Bearing

The second type of turbine bearing is the thrust bearing The thrust bearing maintains the axial alignment of the turbine rotor with respect to the stationary turbine components The thrust bearing also absorbs the thrust caused by the flow of steam through the turbine due to differential pressures It is sometimes said that the thrust bearing is the most important bearing in the turbine The failure of a single journal bearing results in damage due to rubbing in the turbine near that bearing, the rest of the turbine is unaffected If the thrust bearing fails, however, the turbine is damaged throughout since the axial alignment of the entire turbine is lost

Like the journal bearing, the thrust bearing builds up a thin film of oil between the bearing and a thrust runner on the rotor Thus the rotor never touches the bearing surface in normal operation

Figures 3-35(a) and **(b)** show typical arrangements for thrust bearings In both arrangements thrust collar(s) are machined integral or shrunk onto the turbine rotor The thrust bearing may straddle a single collar as shown in **Figure 35-(a)** or be in between two thrust collars as shown in **Figure 35-(b)** In both cases, the bearing actually has two bearing surfaces, one on each side For some turbines the thrust on the thrust bearing is always the same For others the thrust of the rotor in normal operation may be in one direction, however during startup the thrust may be in the opposite direction for brief periods The side of the thrust bearing that bears the thrust of the rotor in normal operation is called the active thrust bearing while the other side is called the inactive thrust

The thrust bearing has plates against which the runners on the rotor ride Actually a thin film of oil prevents the runner from actually coming in contact with the plates The thrust plates or shoes have radial grooves that divide the surface into lands These grooves assure adequate distribution of oil to the entire surface of the bearing

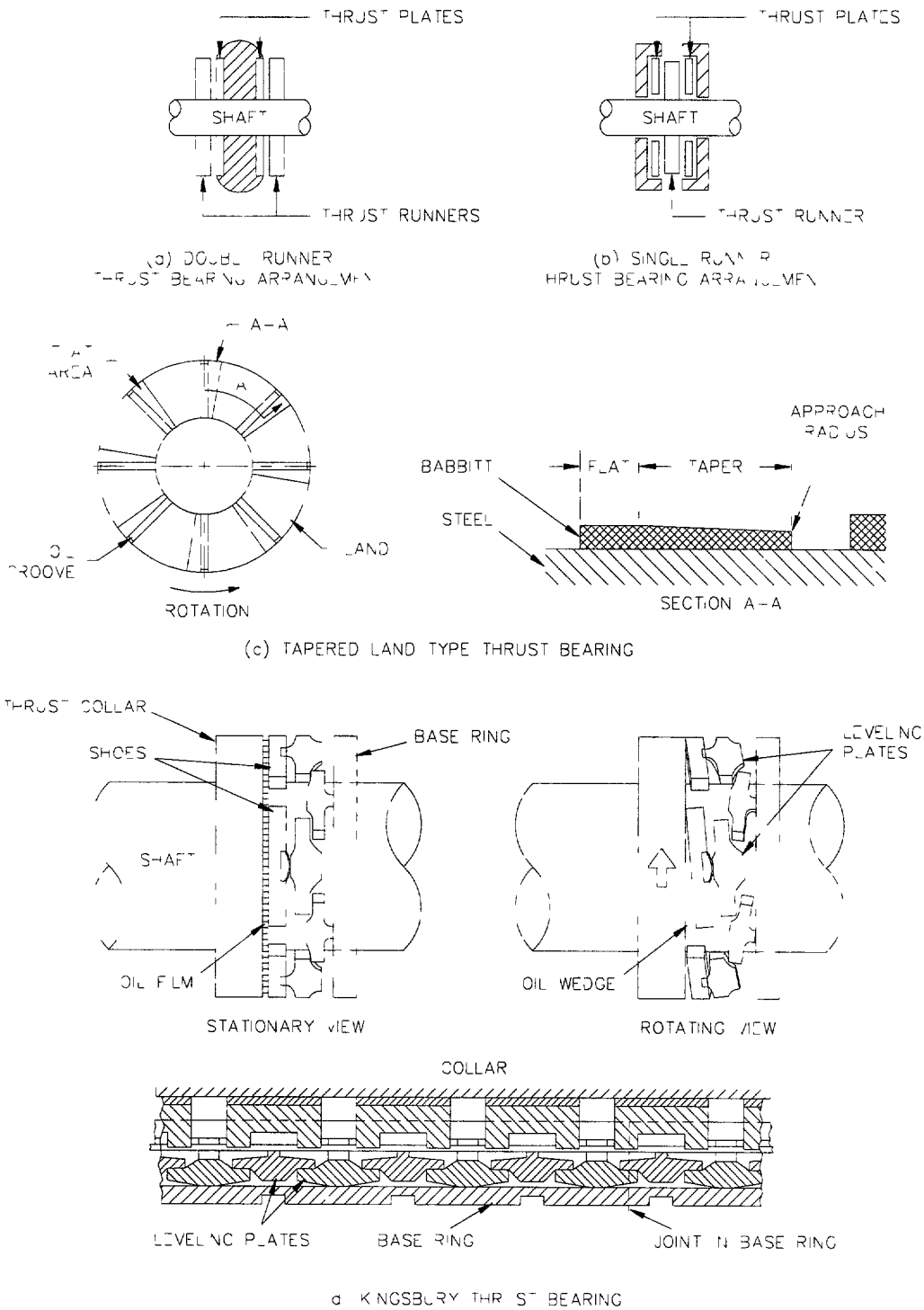

Figure 3-35 Typical Thrust Bearing Variations

227

One type of thrust bearing is the tapered land type shown in **Figure 35-(c)** The tapered land thrust bearing has the appearance of two disks, split at the horizontal joint with a hole in the middle for the rotor to pass through The two disks, or thrust plates as they are called, fit into cylindrical recesses in the bearing ball, which in turn fits into a circumferential slot in the standard

Another common type of thrust bearing normally used on Westinghouse turbines, is the Kingsbury thrust bearing shown in **Figure 35-(d)** This type of bearing is very similar to the tapered land type except that it has separate shoes that can pivot, each independently of the others This design also assures equal loading of all of the pads These features assure that the Kingsbury thrust bearing can operate even when there is minor misalignment, so it is often used where alignment is a problem It is not always used in place of the tapered land type, however, because it is more complicated, wears relatively rapidly, and causes greater losses than the tapered land type

Thrust bearings may wear over time, principally as a result of dirty oil Wear in the thrust bearing results in the rotor moving axially If this movement is excessive, axial rubbing between the rotor and turbine internals results In extreme cases there is severe damage throughout the turbine Most turbines are equipped with a thrust bearing wear detector (TBWD) device to provide alarm and trip functions This device is described later in this Module

Bearing Oil Requirements

Bearings must be supplied with clean oil at the correct pressure and temperature For the Westinghouse units bearing header pressure should be about 14 to 18 psig while for GE units the header pressure should be about 25 psig (both measured at the turbine centerline) The temperature of the oil to the bearings should be 100 - 120°F for both Westinghouse and GE turbines in normal operation High oil temperature can result in excessive "thinning" of the oil, which could result in metal-to-metal contact and damage to the bearing due to overheating Low oil temperature can result in excessive vibration

When the unit is on turning gear, the oil should be thicker (viscosity should be higher) than when the unit is in operation because the pumping action is much less at low speeds than normal operating speeds Because of this problem, the oil temperature should be lowered to 80°F to 95°F when the unit is on turning gear

The principal purpose of the bearing lube oil is to lubricate, however there is another important function that it serves, cooling When the turbine spins in the bearing, it produces hydrodynamic losses which heat the bearing Bearings for the HP turbines are also heated by the rotor itself which conducts heat from the hot steam inside the turbine casing The relatively cool oil cools the bearings It is not unusual for the oil temperature to increase 50°F as it passes through a bearing

Bearing Metal and Drain Temperatures

Temperature indications are usually provided in the lube oil drains Newer turbines also have temperature indications in the babbitt for each bearing The temperature of the bearing and the oil drains are important indications of the condition of the bearing While the bearings are designed for no metal to metal contact, there are many problems that can result in metal to metal contact The friction from metal to metal contact generates heat that can damage the bearing seriously since the melting point of babbitt is only about 300°F Typical normal babbitt temperature for journal bearings is about 150 to 225°F, and commonly there are alarms set at 225°F It is generally recommended that the turbine be tripped at babbitt temperatures of 235°F or more For the thrust bearing and generator and exciter bearings, the recommended alarm and trip limits are typically about 210°F and 225°F respectively For all bearings, typical recommended alarm and trip points for the bearing oil drain temperatures are 170°F and 180°F respectively

3 2 7 Turning Gears

Nearly all large steam turbines are equipped with turning gears, sometimes called jacking gears or turning devices The turning gear turns the turbine rotor slowly (usually about 3 - 5 rpm) during shutdown, prior to starting the turbine, or when the turbine is hot Turning the rotor slowly ensures that it is heated or cooled evenly If the rotor is allowed to come to a rest when hot, temporary bowing of the rotors and excessive vibration can result Distortion of the turbine casing also results because the hotter steam rises to the top of the casing

Most turning gears consist of an electric motor driving a speed reducing gear train The gear train drives a large pinion gear or "clash pinion" as it is often called, that can swing toward and away from the turbine rotor There is a "bull gear" that is mounted at the coupling between the turbine and generator **Figure 3-36** shows a typical turning gear of this type

Another, less common turning gear design uses a worm wheel device that is driven through a gear train by a ratchet device The ratchet device is driven by an air cylinder that is stroked periodically when air is admitted by a solenoid valve Each time the cylinder is stroked, the ratchet is engaged, and the turbine rotor is turned another increment

The worm wheel engages a spacer gear that is mounted at the coupling between the turbine and generator It can swing into and out of engagement It is swung out of engagement when the turbine is in operation When the turbine is shut down and coasts to a stop, an electronic zero speed device sends a signal to the solenoid valve for another air cylinder that pushes the worm wheel into engagement The turning gear automatically comes out of engagement when the turbine is started up

The turning gear is usually lubricated with oil from the turbine lube oil system For older units, a manual valve located near the turning gear must be opened to supply lube oil to the turning gear Usually a pressure switch at the lube oil feed line provides an interlock to prevent the turning gear motor from being started without adequate lube oil pressure Another feature common to older units is manual engagement of the turning gear For these older units, there is commonly a hand crank that is used to engage the clash pinion

Newer steam turbines have more automated turning gears The turbine lube oil system is still used for lubrication, however for most newer turbines, solenoid operated valves that open automatically when the turning gear is started are used to admit oil to the turning gear instead of manual valves

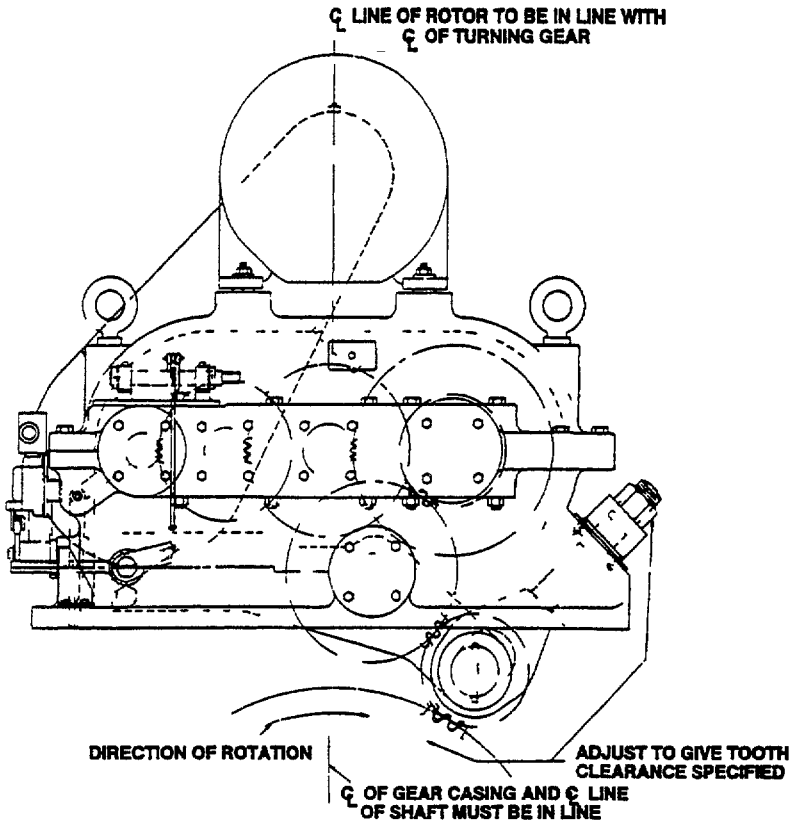

Figure 3-36 Typical Turning Gear

The engagement of the turning gear is also automated for newer turbines The newer units are equipped with a device (which may be mechanical-hydraulic or electronic) that senses when the turbine rotor has come to rest The zero speed signal is used to start the turning gear motor automatically and to open a solenoid valve that admits air to a piston and cylinder that drives the clash gear into engagement

There is usually an ammeter for the turning gear motor regardless of the vintage of the turbine The turning gear motor current should be monitored closely A high turning gear motor current indicates difficulty such as rubbing Turning gear motor current that alternates between a high value to normal value is even more indicative of a rub in the turbine

The turbine should be placed on turning gear whenever the turbine is to be heated, such as by placing the steam or gland seal system in service The turbine should also be placed on turning gear to remove any temporary bow in the rotor immediately before startup When the turbine starts up, the turning gear is automatically "thrown" out of engagement The turbine should remain on turning gear until the turbine has cooled after shutdown After the turbine is cooled, the turbine may be taken off turning gear

3 2 8 Shaft Grounding Brushes

A static charge tends to build up on the turbine rotor in operation due to the flow of steam over the rotating blades This effect is somewhat similar to the accumulation of static charge in clouds that result in lightning Voltages on the turbine rotor can also result from currents in the generator rotor and/or the exciter If there were no shaft grounding brushes, when the voltage difference between the rotor and bearing became large enough, the current would "jump" across the oil film in an arc to the bearing (called arcing) The high voltage discharges (up to 150 volts) would damage the bearings

The shaft grounding brushes (also referred to as an earth brushes) provide a low resistance current path from the rotor to ground This prevents high voltages from developing and arcing and thus prevents bearing damage

There are several different designs for shaft grounding brushes One type uses spring loaded carbon brushes similar to those used for generator collectors Another is similar except that the brushes are steel with silver shoes, or wearing surfaces These two designs share a common problem Over time, the brushes wear and their springs must then be adjusted to maintain the proper pressure of the brushes against the shaft

A newer design, the copper braid type brush, eliminates this problem The copper braided brush is a heavy copper braid "strap" about 1-1/2 inches wide and 1/4 inch thick which is mounted on a coupling guard to ride against the shaft There is essentially no wear and thus no adjustment of springs is required While copper braided brushes are generally simpler and more effective than older designs, they have the potential for accumulation of a film of oil and dirt between the brush and the rotor that acts as an insulator This film interferes with the effectiveness of the brush

The effectiveness of the shaft grounding brushes, regardless of the type, should be checked periodically The check should be done using an oscilloscope to check both AC and DC voltages

3 3 Turbine Main Steam Valves

The main steam valves are used to control admission of steam from the steam generator (HRSG or boiler) to the turbine under emergency and normal operating conditions There are usually two sets of valves in series in the piping from the steam generator to the turbine for each section of the turbine that receives steam from the steam generator The HP turbine receives steam from the steam generator HP superheater The throttle valves (TVs, also called main stop valves, MSVs) and governor valves (GVs, also called control valves CVs) control HP steam flow to the turbine The TVs are emergency valves that are generally either fully open in normal operation, or fully closed to trip the turbine

Most reheat turbines have two sets of valves between the steam generator reheater and the IP turbines The first set of valves (usually two) are called the reheat stop valves Their function is analogous to that of the TVs The second set of valves are the interceptor valves (IVs, also called intercept valves) Some older units have no RSVs, only IVs

Steam turbines in combined cycle plants with multipressure HRSGs commonly have no reheater The turbine must be designed to accept low pressure steam, however, from the low pressure circuit of the HRSG There are usually two sets of valves in series between the HRSG LP outlet header and the turbine LP inlet with an arrangement similar to that of the reheat valves for an IP turbine These valves are often called induction valves

It is very important that the main steam valves close quickly (in a few tenths of a second) in the event of an emergency The design of the main steam valves satisfies this requirement Part of the design is provisions for testing by closing most of these valves while the unit is in operation Provisions for valve testing are described in later in this Section

A design problem common to all but the smallest main steam valves is the large pressure differential across the disk when closed The pressure differential produces a large force that must be overcome by the valve operator to open the valve This problem is generally addressed by building features into the valve to reduce the pressure differential across the valve disk In some cases a bypass arrangement is used while in others a special balanced valve design is used

3 3 1 HP Turbine Inlet Valves

Throttle/Main Stop Valves

The first set of valves in series that controls admission of HP steam to the turbine are the throttle valves (TVs, Westinghouse nomenclature) or main stop valves (MSVs, GE nomenclature) The TVs are not normally modulating valves, they are either fully open, or fully closed in normal operation The TVs remain fully open until the turbine is shut down or an emergency such as overspeed trips the valves closed The TVs for most turbines can be used to control speed and/or load for startup During the period of startup only these valves are modulated

Steam turbines may have any number of TVs from one up to four It is very unusual for there to be more than four TVs Each TV has a single inlet from the HRSG HP header and one or more outlets to the steam chest The steam chest may be separate or shell mounted as explained earlier

Most Westinghouse TVs employ a double plug design **Figure 3-37** shows a cross section of a TV and servomotor The servo motor, is single acting, spring closed The servo motor is mounted on the underside of the valve body GE MSVs nearly always have a design similar to that shown in **Figure 3-38** This design features a poppet valve design with the steam passing through the bottom of the valve casing The steam enters the upper part of the casing, passes through a strainer, downward through the seat, and leaves through the lower portion of the casing The main disk has an internal bypass valve as shown in detail in **Figure 3-39**

For both Westinghouse and GE valves, the stems are sealed using closely fitted valve stem bushings The diametral clearance between the stem and the bushing is typically 0 002 to 0 008 inch This close clearance reduces and controls leakage Westinghouse valve stems usually are grooved, as well, to help improve the effectiveness of the sealing

The TV stem passes through the bottom of the valve, downstream of the seat through the bonnet The valve has a backseat in the bonnet which essentially seals the valve stem when the valve is fully open It is sealed by closely fitting bushings in the pressure seal head for situations where the valve is not fully opened or closed There are drains in the valve, one upstream of the seat and another downstream These are called the before and after seat drains, respectively

A problem common to both the GE and Westinghouse valves is that of overcoming the large opening force required to open the valves when closed with rated pressure upstream The actuator cannot open the valve against this force The pressure differential across the disk is reduced so that the valve can open by installing a small pilot valve in the main disk to bleed some steam downstream disk If the GVs or CVs downstream of the TVs or MSVs are closed or throttled, the pressure downstream of the TV/MSV disk is reduced enough for the actuator to be able to open the main disk This small pilot valve inside the main disk is called the main stop valve bypass for GE units This design is called the double plug (plug instead of valve disk) design for Westinghouse units

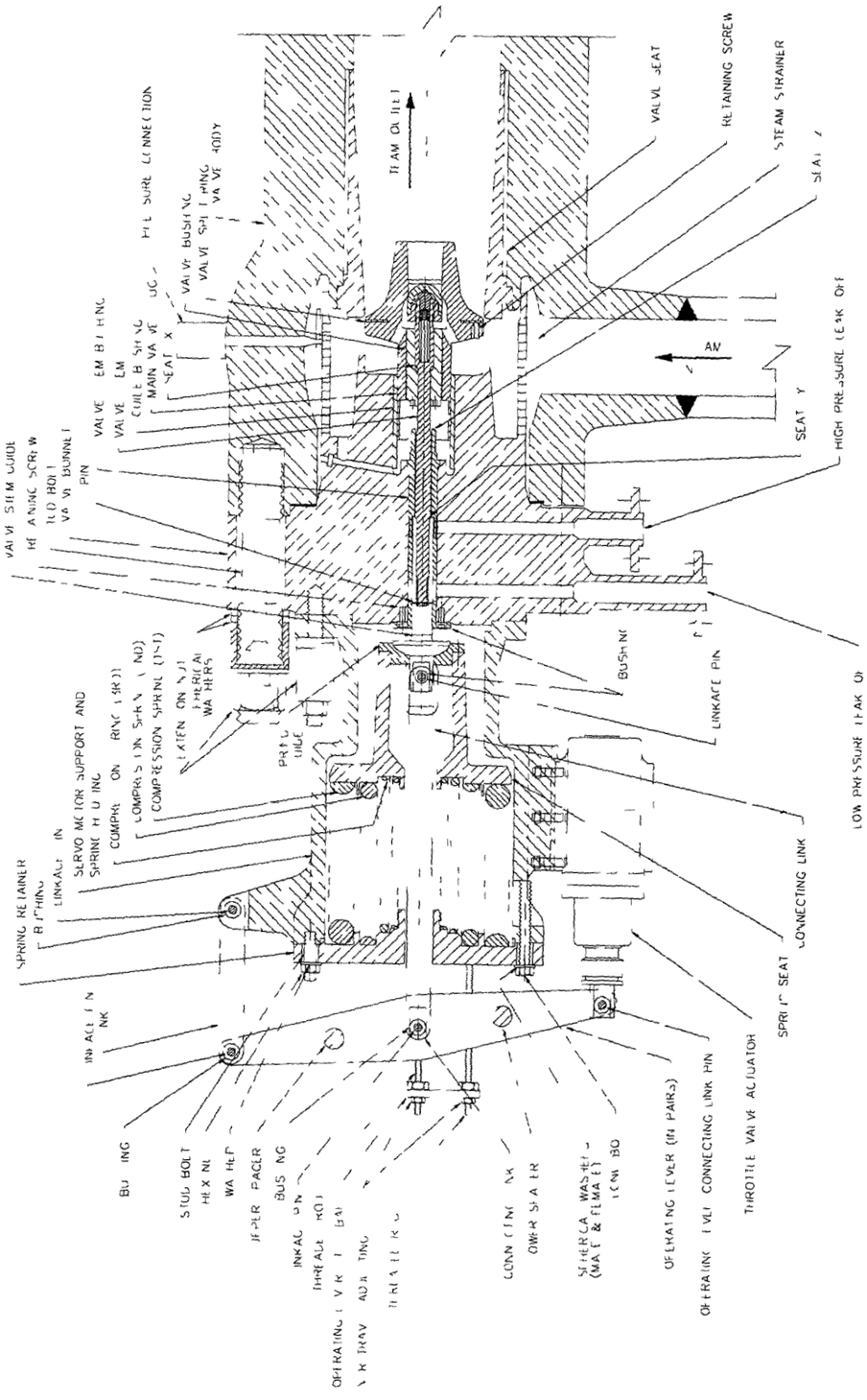

Figure 3-37 Typical Westinghouse Throttle Valve

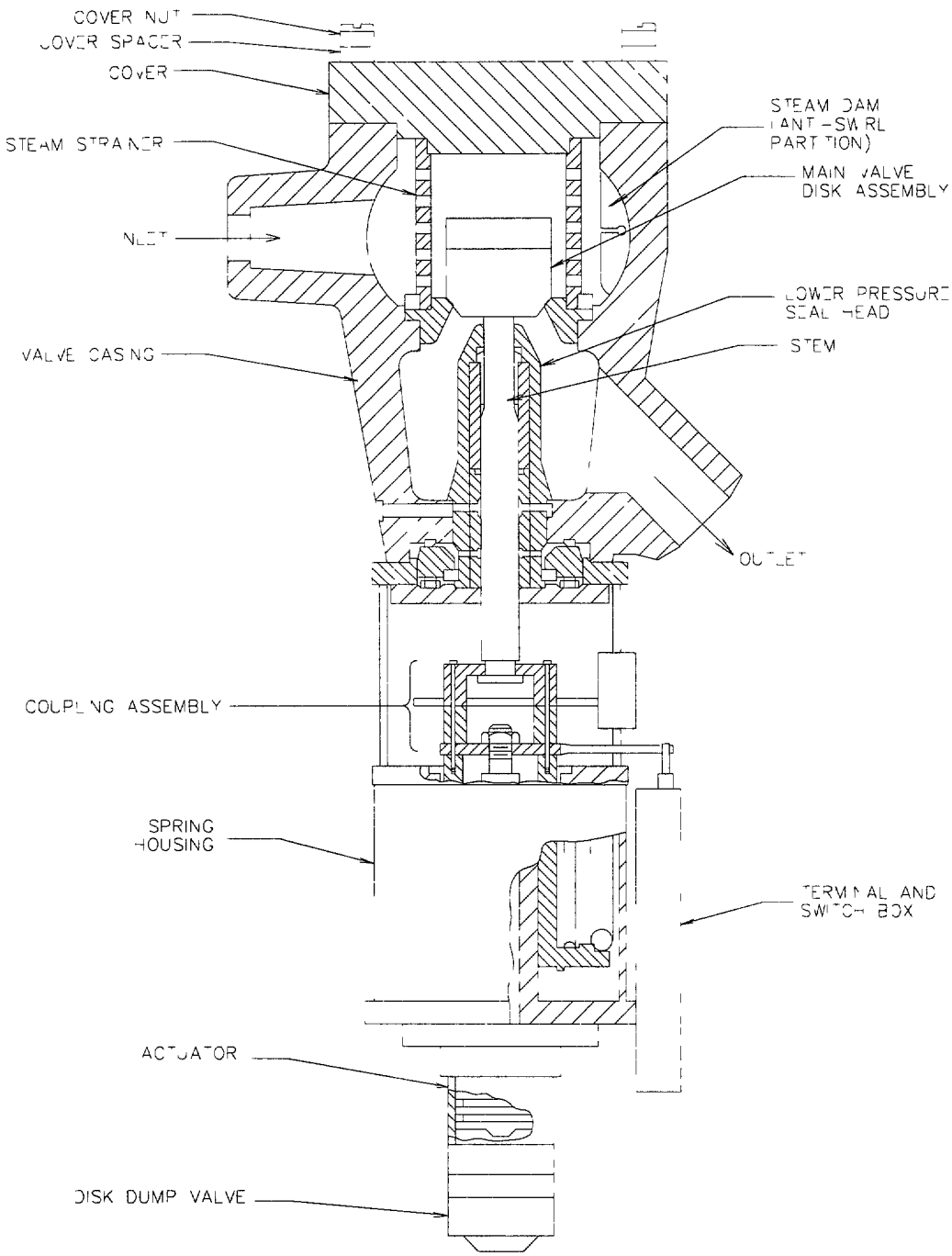

Figure 3-38 Typical GE Main Stop Valve

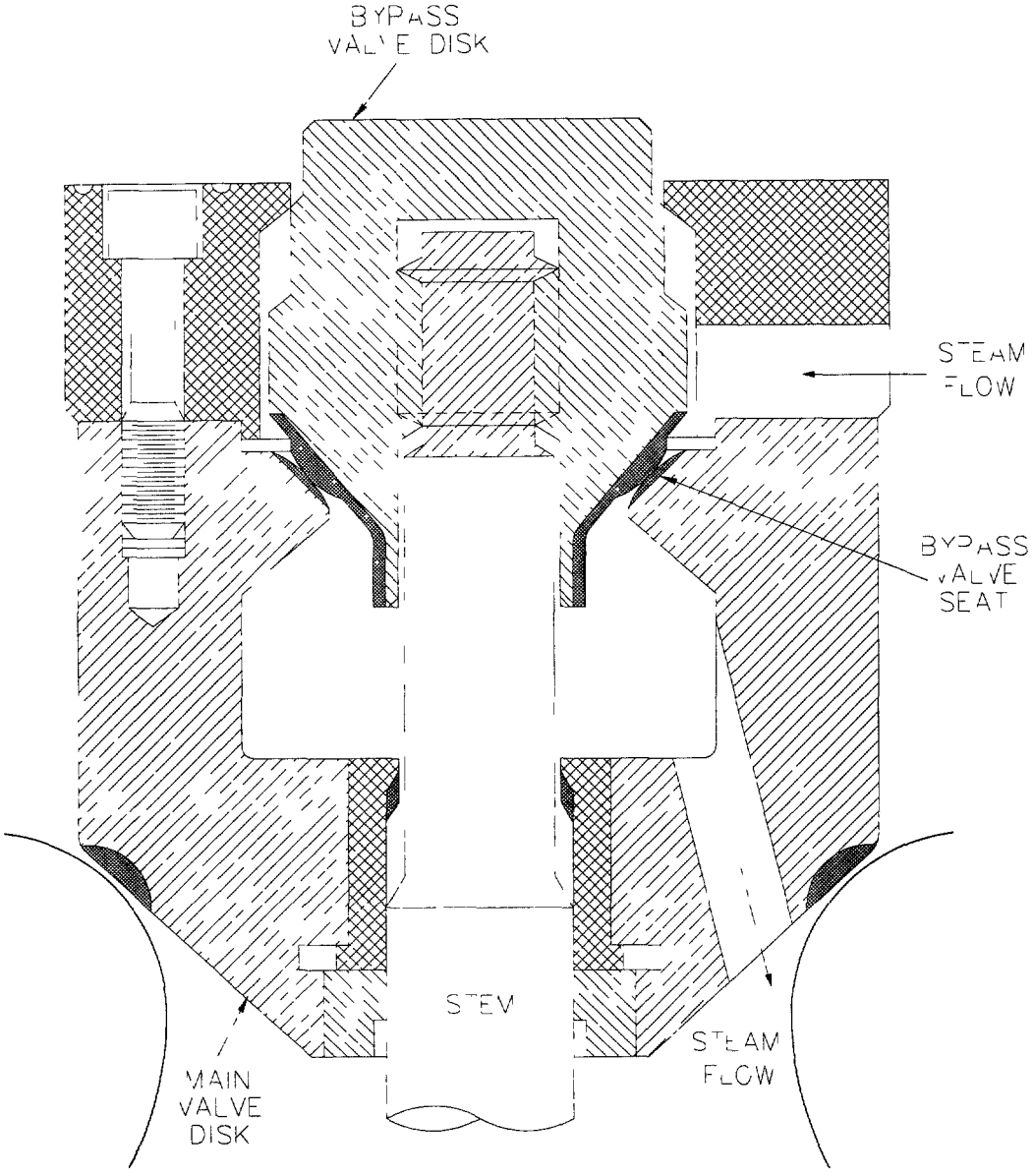

Figure 3-39 Simplified GE Main Stop Valve Disk with Internal Bypass Valve

For both designs, the pilot valve is on the end of the valve stem When the actuator moves the stem in the opening direction, the pilot valve opens first while the main disk remains on its seat When the pilot valve is fully open, the pressure differential across the main disk is reduced enough to allow it to open as the stem continues to move upward, provided (once again) that the GVs or CVs downstream are closed or throttled

The pilot valves in the TVs and MSVs are used for purposes other than pressure equalization The pilot valves have enough capacity to pass steam to roll the turbine to rated speed and carry load During startup the TVs or GVs are modulated to control speed and load This mode of operation is called full arc admission

Both the TV and MSV have strainers installed upstream of the seats A strainer is simply a cylinder open at the top and bottom On the downstream side, drilled holes are drilled A heavy screen is riveted over the holes in the screen This strainer prevents relatively large debris from entering the turbine It cannot trap very small particles, such as the oxide that often flakes off of the inside of boiler or HRSG tubes There is an anti-swirl dam in the valve body that prevents steam swirl inside the valve casing and helps trap debris

The TV/MSV strainer is fitted with temporary fine mesh screens in the manufacturer's factory to trap debris expected from initial operation of a new unit This temporary fine mesh screen is removed after initial operation of the unit when it has been determined that the debris has been blown out Often the fine mesh screens are installed again after outage in which boiler or HRSG tube repairs have been made

Governor/Control Valves

The second set of valves that is used to control flow of HP steam into the turbine are the governor valves (GVs, Westinghouse nomenclature) or control valves (CVs, GE nomenclature) The GV/CVs are used to modulate the flow of steam into the HP turbine to control either speed, load or initial pressure Some units start up in "full arc" admission as described in the previous Section In full arc admission the governor valves are open fully and the throttle valves are used to modulate steam flow The function of the valves is the same regardless of their name, CVs or GVs

The number of GV/CVs varies considerably among turbine designs Some turbines have only one GV while others have as many as 10 or 12 Relatively small units, those less than about 250 - 300 MW usually have the GVs mounted in steam chests that are integral to the turbine shell It is most common for units with shell mounted GVs to have identical steam chests on the upper and lower half shells with the same number of GVs in each steam chest Steam is admitted to the steam chests through the TVs

For relatively large units, those greater than about 250-300 MW, the steam chest and GVs are too large to be mounted on the turbine casings The steam chest(s) for these units are separate from the turbine casing GE units usually have a single steam chest like that shown in **Figure 3-40** that is usually mounted between the turbine deck and the mezzanine in front of the turbine Most Westinghouse units with separate steam chests have two steam chests like that shown in **Figure 3-41** that are mounted on the turbine deck elevation, one on either side of the HP turbine

Most GVs and CVs design for small turbines is an unbalanced plug type design The stem for the GV/CV passes through a bushing with close clearance for sealing

There is usually an HP leakoff and an LP leakoff in the sealing arrangement The leakoffs are connected to the gland/steam seal system **Figure 3-42** shows a typical small, unbalanced GV/CV

All of the GV/CVs may be positioned by a single hydraulic actuator through a lever, bar lift or cam arrangement Most larger units have individual actuators, however GV/CV actuators are usually double acting, with spring assist closing

GV/CVs are normally opened sequentially rather than in unison Sequential opening is also called partial arc admission and multiple, sequential admission In order to understand the term partial arc admission and contrast it with multiple sequential admission it is necessary to examine the first stage nozzle that is fed by the GV/CVs The first stage nozzle is broken up into a number of separate chambers, or arcs, as shown in **Figure 3-43** Each CV/GV feeds one arc For a turbine with multiple sequential admission, not all of the GV/CVs are open when the turbine is at low loads Thus, at low loads only some of the arcs of the first stage nozzle are fed with steam This is the reason this mode of operation is called partial arc admission

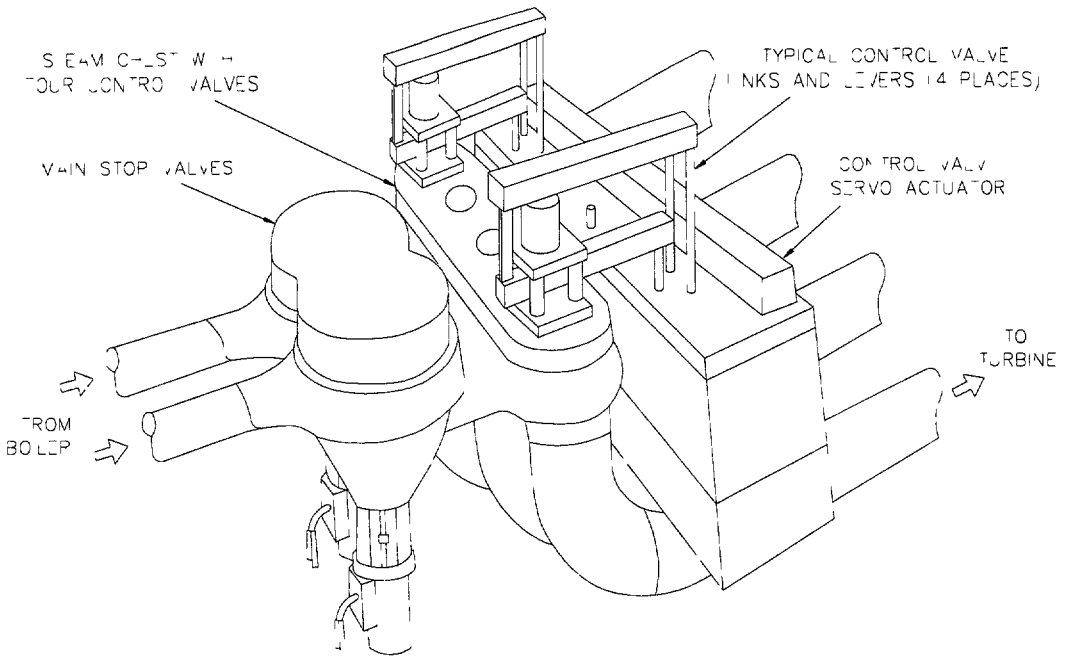

Figure 3-40 Typical GE Separate Valve Chest

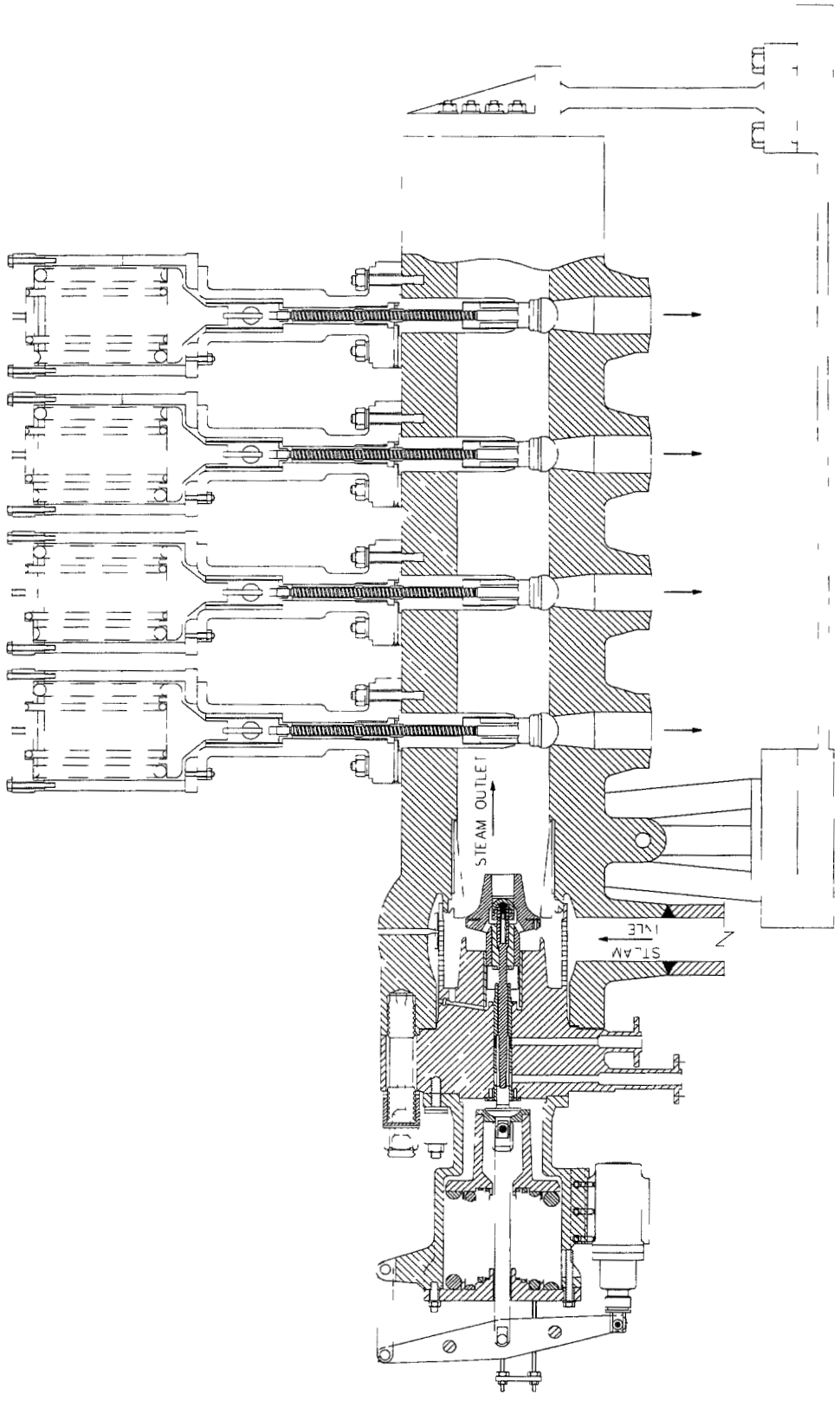

Figure 3-41 Typical Westinghouse Separate Valve Chest

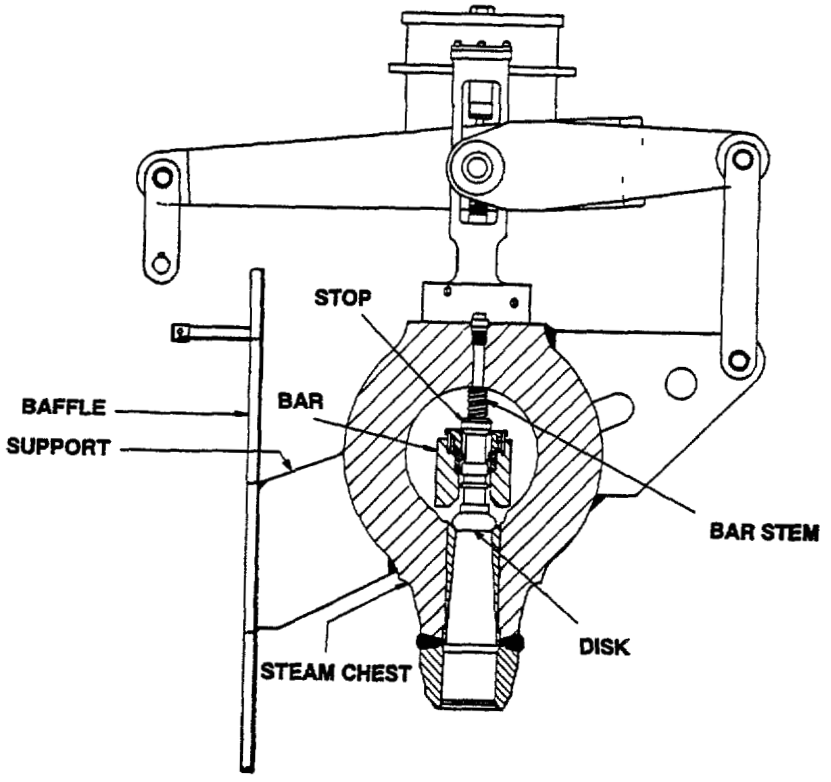

Figure 3-42 Typical Westinghouse Unbalanced Governor Valve

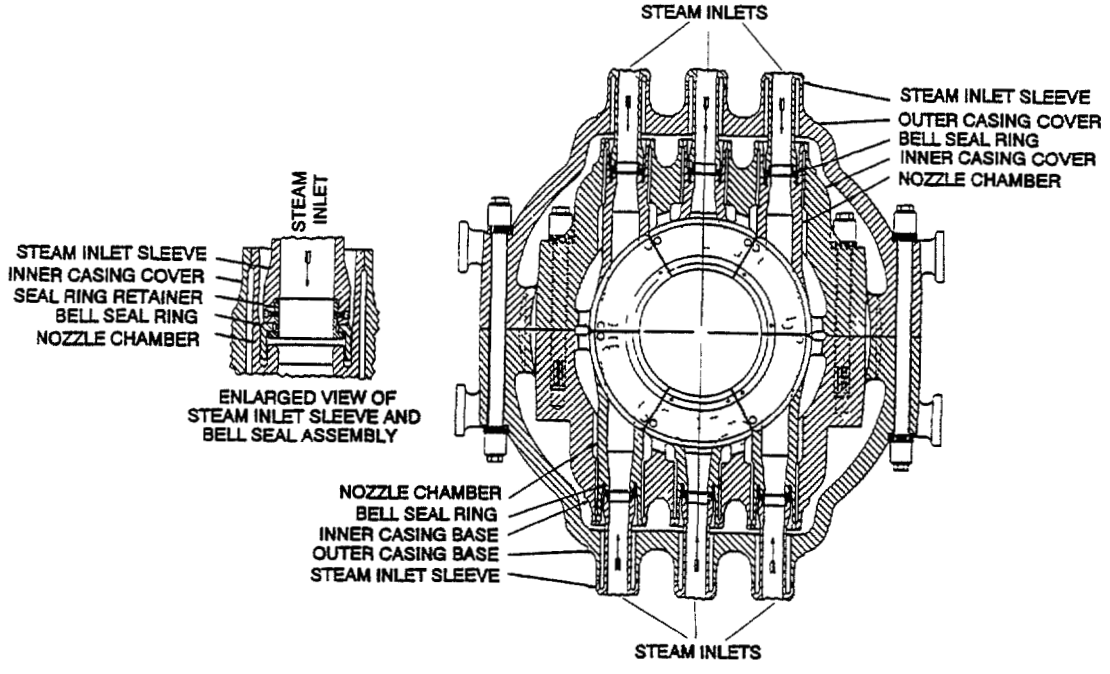

Figure 3-43 Typical Westinghouse First Stage Nozzle and Bell Seal

14

Partial arc admission has the operational disadvantage that during startup there is high thermal stress High thermal stress results from localized heating of the arcs that are fed steam, in contrast to the relatively cold arcs that are not fed steam After many instances of startups with the accompanying thermal stress, cracking of the first stage nozzles can result The solution to this problem is to admit steam to all of the nozzle arcs at the same time during startup This is usually done by opening the GV/CVs wide open while using the TV/MSV internal pilot valves to modulate and control the follow of steam Since the full arc of the first stage nozzle is fed with steam in this mode of operation, it is called full arc admission

3 3 2 IP Turbine Inlet Valves

Reheat Stop Valves

Most turbine manufacturers have two sets of valves in the piping between the steam generator reheater and the IP turbine inlet The first set of valves is usually the reheat stop valve (RSV) The RSV is a non-modulating valve that is roughly analogous to the TV/MSV The RSV is fully open in normal operation and trips closed when the turbine is tripped or shut down normally Unlike the TV/MSV, there is no time in operation, including startup, in which the RSVs are modulated Some smaller, older units do not have RSVs

Both Westinghouse and GE have used several different designs for the RSV The most common of these is very similar to a check valve except that it has a hydraulic actuator to hold it open in normal operation and close it when it is tripped In the Westinghouse design, shown in **Figure 3-44**, the actuator is connected to a bell crank outside of the valve casing while in the GE design the actuator is connected inside the valve casing

The actuators for the RSVs are typically single acting with spring closing As with the other main steam valves, the RSV stems are sealed using closely fitted bushings The stems are backseated so that in normal operation there is no leakage

245

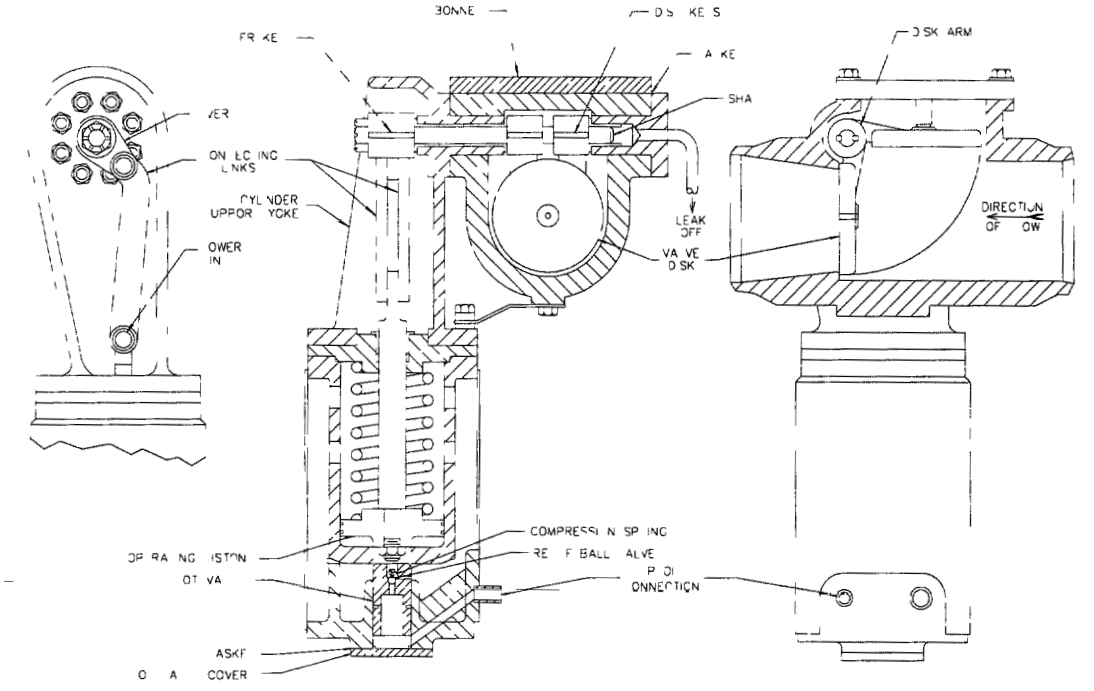

Figure 3-44 Typical Westinghouse Reheat Stop Valve

246

Intercept/Interceptor Valves

The second set of valves controlling the flow of steam from the steam generator reheater to the IP turbine is the interceptor valve (Westinghouse nomenclature) or intercept valve (GE nomenclature), both abbreviated as IV The IVs are analogous to the GVs/CVs in that they are modulating valves The IVs are always fully open in normal operation, however The only time that they are called upon to modulate is during overspeed events

The IV is typically a poppet valve although some designs are balanced **Figure 3-45** shows a typical Westinghouse balanced IV As with the other types of main steam valves, the valve stems are sealed with closely fitted bushings The seats are usually backseated so that there is no leakage in normal operation

Combined Reheat Valves

GE uses a design on its newer units called the combined reheat valve (CRV) The CRV, shown in **Figure 3-46**, appears to be only one valve In fact it is two valves within a single casing that share the same seat The RSV is in the bottom of the valve and is very similar in design to the main stop valve The IV is in the top of the valve Both valves use the same valve seat, the RSV inside the IV

Each valve has its own actuator, and either valve can move through its entire stroke independently of the other The valve stems for both the RSV and IV are sealed with bushings which have a small clearance with the stem The stems are both backseated since these valves are fully open in normal operation The seal leakoffs for these valves are usually run to an open funnel drain instead of the steam seal system In normal operation there should be no leakage into the drains because the valves should be backseated The open funnels allow operators to easily check for leakage

The IV is a balanced design in that the RSV opens first, acting as an equalizer valve, allowing the pressure in the IV balance chamber to escape downstream Normally the RSVs open when the turbine is reset, prior to start-up, when there is no pressure differential across the valve The IVs then open when the turbine is started

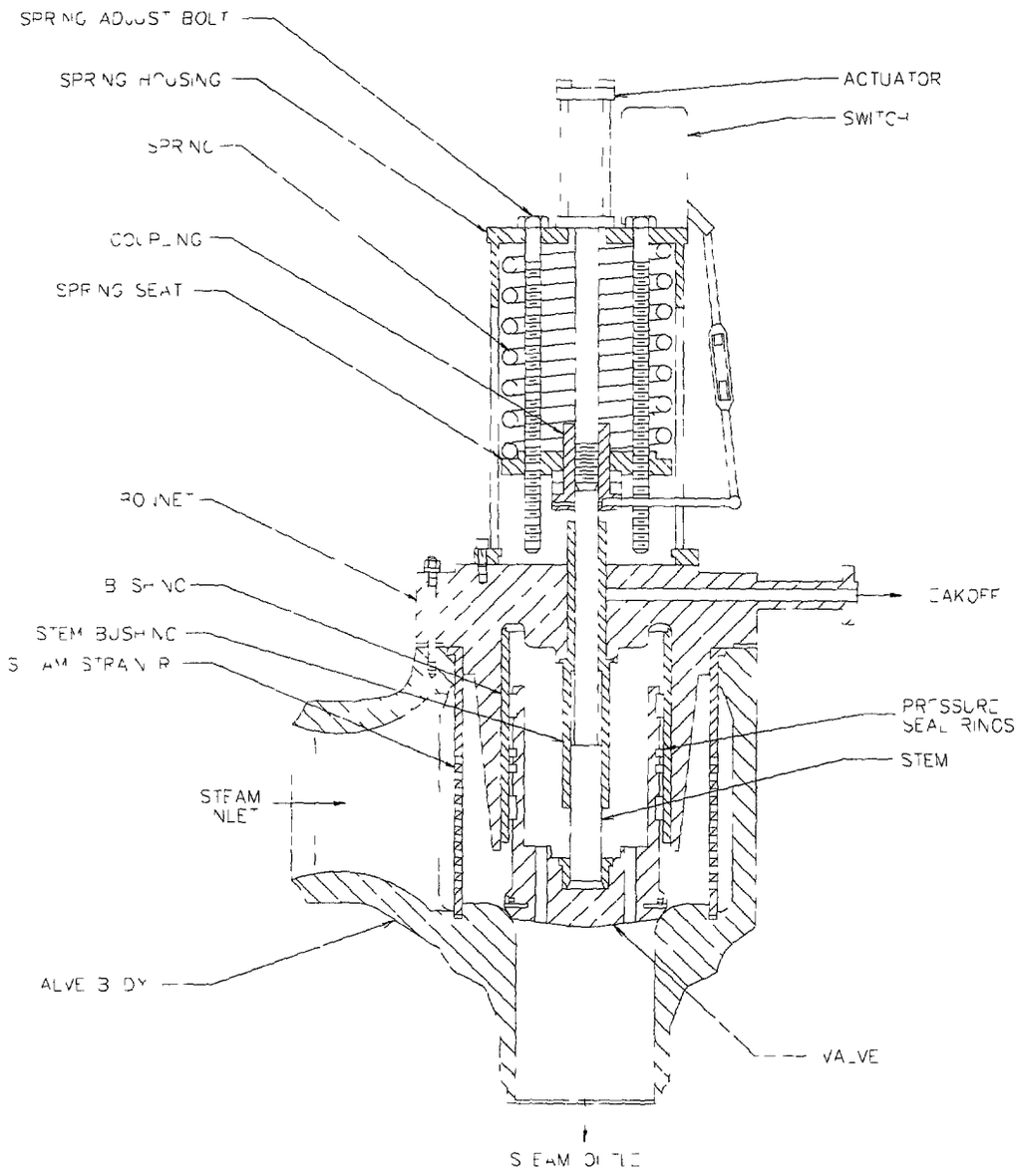

Figure 3-45 Typical Westinghouse Interceptor Valve

268

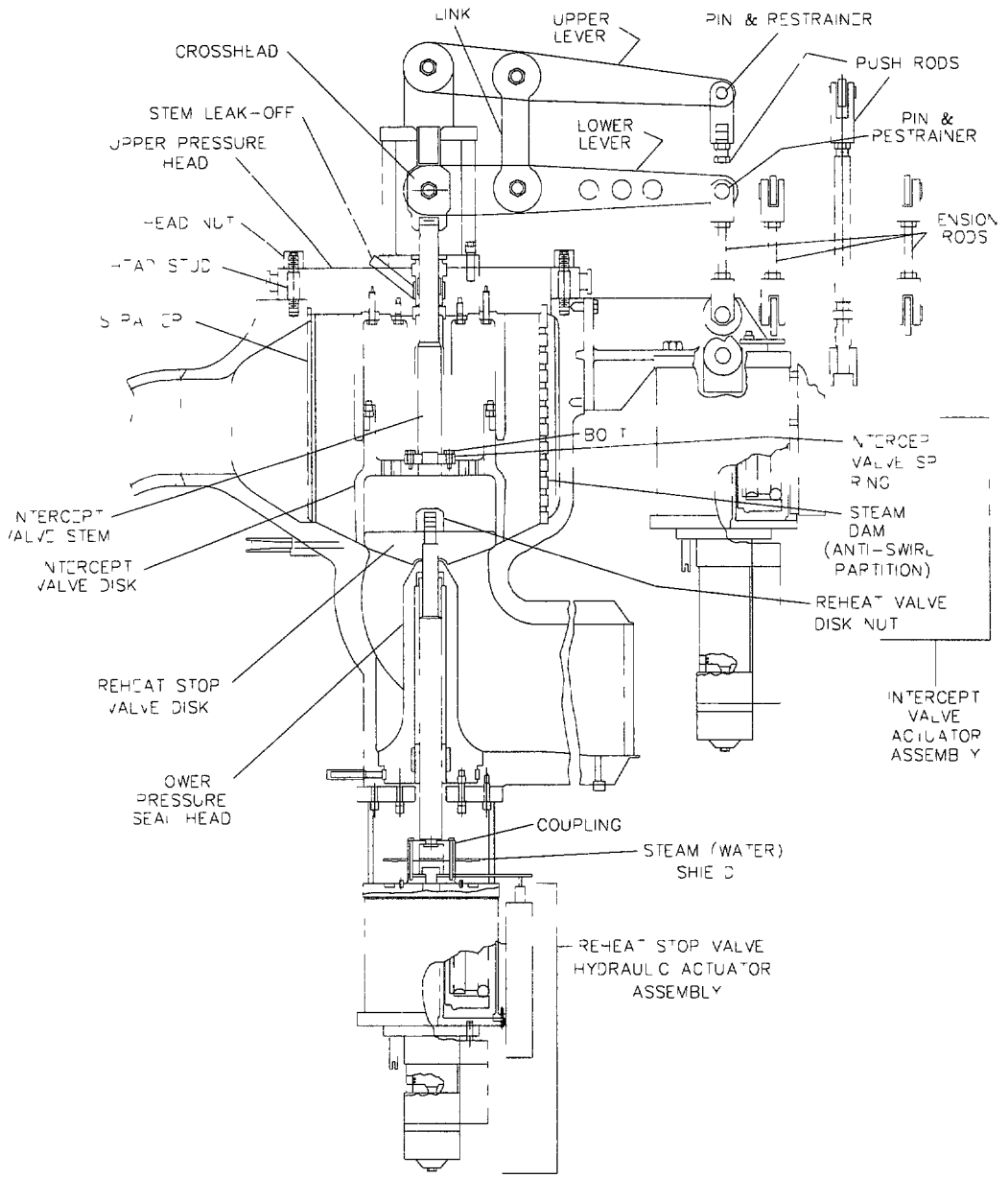

Figure 3-46 Typical GE Combined Reheat Valve

3 3 3 Low Pressure Valves

For turbines integrated in combined cycle plants with multipressure HRSGs, there are provisions for admission of LP steam The LP steam is admitted to a point in the turbine steam path that matches the LP steam pressure As with the steam from the steam generator to the HP and IP turbine sections, there are usually two sets of valves in series, a stop valve and a modulating valve The stop valve is fully open in normal operation and the modulating valve is generally positioned to control the pressure in the LP circuit of the HRSG

The naming of these valves is not standardized like that of the HP turbine and IP turbine inlet valves For some units they are called induction valves while for other units they are called LP admission valves There are many other names as well

LP Stop Valve

Many different valve designs are used for LP stop valves In some cases the valve used is very similar to the reheat stop valve while in other cases a butterfly valve is used As with other main steam valves, the LP stop valve stem is generally sealed using a closely fitted bushing There may or may not be connections to the turbine gland seal system and a backseat There is usually a strainer in the LP stop valve that protects the turbine from damage from debris

Induction Control Valve

As with the LP stop valve, many different types of valves have been used as LP control valves including butterfly valves, balanced and unbalanced designs As with the other main steam valves the stem is generally sealed using closely fitted stem bushings which may or may not have connections to the turbine gland\steam seal system In some cases where there is no strainer in the LP stop valve, there is a strainer installed in the LP control valve to protect the turbine from debris

The LP control valve is generally modulated to maintain the pressure in the LP circuit of the HRSG The valve may also be modulated in the event of overspeed to control and limit the peak overspeed

250

3 4 Turbine Lube Oil System

The function of the turbine lube oil system is to provide lube oil to the turbine bearings and other hydraulic devices The lube oil system is often thought of strictly in terms of lubrication and indeed that is perhaps its most important function Another important function that is often overlooked, however, is its heat removal function The bearings and other devices that are served by the lube oil system generate considerable heat The lube oil carries this heat away for rejection in the lube oil coolers Another important function served by the lube oil system, for units with hydrogen cooled generators, is as a backup to the generator seal oil system

The turbine lube oil system essential to the operation of the unit Immediate failure of the turbine bearings and loss of alignment with severe internal damage results in the event of failure of the lube oil system There are many different lube oil system designs, however, given the importance of the lube oil system, a feature common to all systems is multiple lines of defense against the loss of lube oil in operation

Lube oil is commonly used for various control purposes as well, however For older units, high pressure lube oil is used for hydraulic fluid for the main steam valve actuators These units commonly use an older type of control system called an MHC (Mechanical Hydraulic Control) system Most newer units have EHC (Electro Hydraulic Control) systems that have a separate hydraulic system that uses a different fluid and pressure than the lube oil

GE and Westinghouse lube oil systems are very similar The following Section describes a typical GE lube oil systems as an example Where there are significant differences in the Westinghouse systems, these differences are noted

3 4 1 Typical Lube Oil System

The GE lube oil system, shown schematically in **Figure 3-47**, consists of the following major components

- Main lube oil tank
- Main oil pump (MOP)
- Two booster pumps
- Auxiliary oil pump (AOP)
- Turning gear oil pump (TGOP)
- Emergency bearing oil pump (EBOP)
- Lube oil coolers
- Vapor extractor
- Bypass filtration system

The turbine lube oil system proper contains two major flow paths, one supplies high pressure oil for turbine control and protective devices, and the other supplies lower pressure lubricating and cooling oil to the turbine and generator bearings

In the high pressure flow path, high pressure oil at about 225 psig is supplied by the main oil pump (MOP) when the turbine is in normal operation at rated speed Westinghouse units operate at pressure of 150 psig for older units and 300 psig for newer units The MOP is located in the HP front standard and is driven from the HP turbine rotor through a stub shaft The AC motor driven auxiliary oil pump (AOP) provides the source of high pressure oil while the turbine is being started up or shut down This is necessary because the MOP cannot provide high pressure oil when the turbine speed is less than rated speed The high pressure oil discharged by either pump is routed to the high pressure oil header to the main steam valve servomotors, turbine controls and protective devices Oil from the devices that use the high pressure oil drains back to the main lube oil tank

252

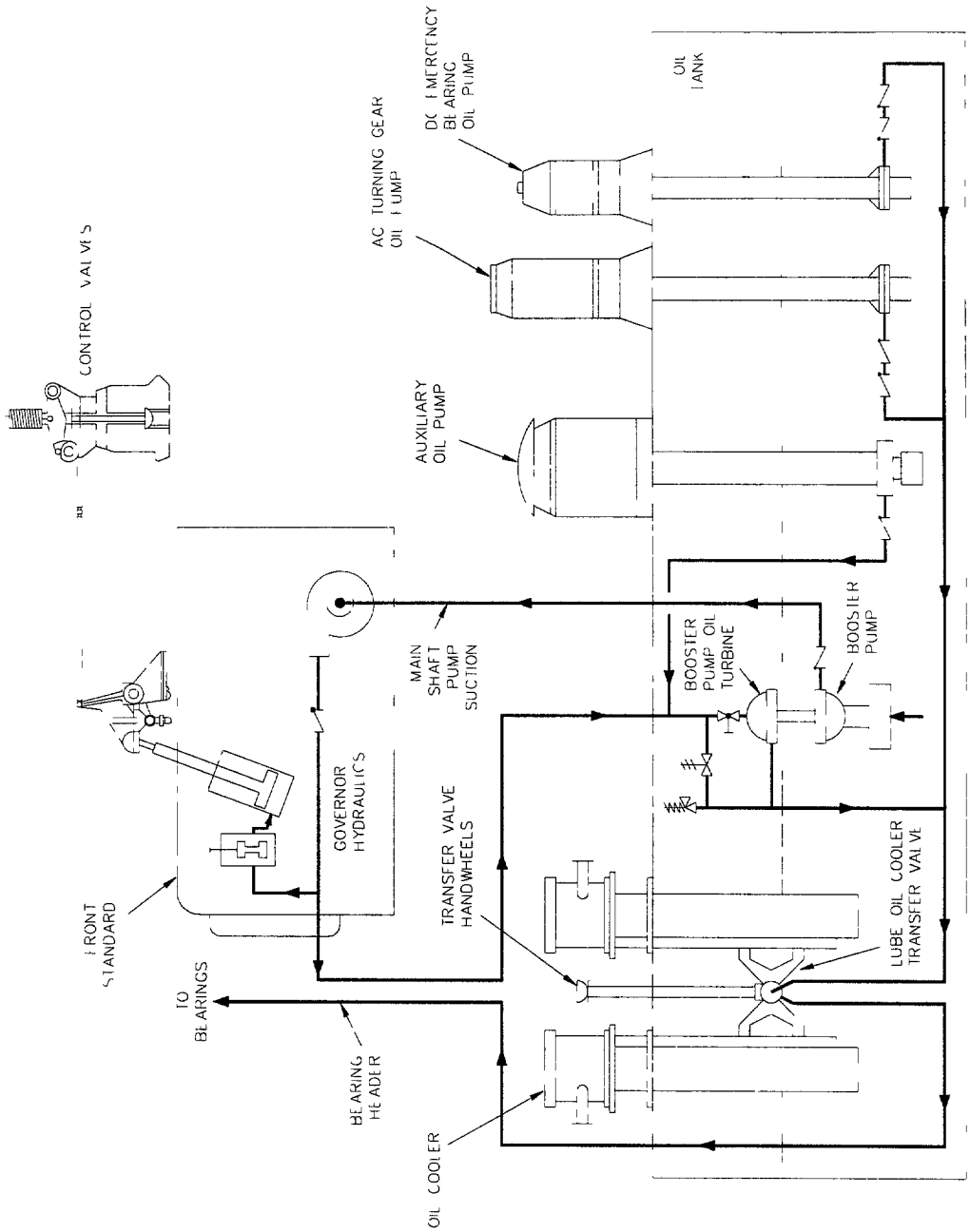

Figure 3-47 Typical GE Lube Oil System Arrangement

The oil supply for both the main oil pump and the auxiliary oil pump is the main oil tank The MOP is at the turbine deck elevation while the main oil tank is in the basement This difference in elevation makes it necessary to provide booster pumps to supply the MOP suction The booster pumps that are used in normal operation are oil turbine driven for GE units and ejectors for Westinghouse units and use high pressure oil from the MOP discharge for motive fluid This arrangement is an important feature of the lube oil system because it means that in normal operation all motor driven pumps can be shut down and the lube oil system is self-sustaining During startup and shutdown of the turbine, when high pressure oil from the MOP is not available, oil from the AOP low pressure discharge provides suction to the MOP

In the low pressure flow path, the source of low pressure oil is the booster pump turbine discharge in the main oil tank A relief valve at the oil turbine discharge limits the lube oil header pressure to about 25 psig at the turbine centerline Lube oil header pressure for most Westinghouse units is 18 psig at the turbine centerline The lube oil from the turbine discharge is piped to the lube oil coolers, only one of which is in service during normal operation The oil coolers cool the lube oil and the cooled lube oil then flows to the bearing lube oil header Branches from the lube oil header provide lubricating oil to all of the turbine and generator bearings Oil is also provided to some control devices All oil from these components drains back to the lube oil tank

The MOP supplies all high and low pressure oil requirements of the turbine in normal operation as explained above The lube oil system also has three motor driven pumps that are used during startup and shutdown and during emergencies The first of these three pumps is the AOP which is mentioned above The AOP provides high pressure oil to the high pressure oil header The AOP is used during startup and shutdown Since the AOP takes the place of the MOP high pressure discharge, the booster pumps and turbines operate just as they do in normal operation with the MOP in service to provide MOP suction and the lube oil header

The second motor driven pump is the AC motor-driven turning gear oil pump (TGOP) that supplies lube oil when the turbine generator is on turning gear, prior to

254

start-up, or after shutdown when the AOP is not in operation The TGOP takes suction from the main lube oil tank and discharges into the lube oil header before the lube oil coolers (at the same point as the discharge of the booster pump turbines) A check valve prevents backflow through the booster pump turbines

The third motor driven pump is the DC motor-driven emergency bearing oil pump (EBOP) which supplies the turbine bearings with oil in the event that none of the other three pumps function A common scenario in which the EBOP must operate is during a shutdown with loss of AC power to the other motor driven pumps The EBOP takes suction from the main lube oil tank and, like the TGOP, discharges into lube oil header before the lube oil coolers

A single AC, motor-driven vapor extractors constantly removes moisture, oil vapor and hydrogen from the main oil tank through a mist separator The vapor extractor also keeps the main lube oil tank under a slight negative pressure

A portion of the turbine lube oil is constantly cleaned in an oil filter or purifier Oil from the lube oil header goes to the filter and the clean oil is discharged into the lube oil tank

Lube Oil Tank

The lube oil tank (or reservoir as it is sometimes called) is usually a large tank that is of rectangular, box-like construction A large tank is used to provide a long residence time for the oil so that debris settles to the bottom of the tank The bottom of the tank has shallow "vees" that accumulate sludge for draining **Figure 3-48** shows a typical lube oil tank Westinghouse uses a cylindrical tank for its newer units

Hinged doors on the top of the tank provide access to the inside of the tank and components such as the booster pump and turbine, and related valves These doors also act as explosion relief devices It is important, therefore, that the doors never be locked or tied down in any way

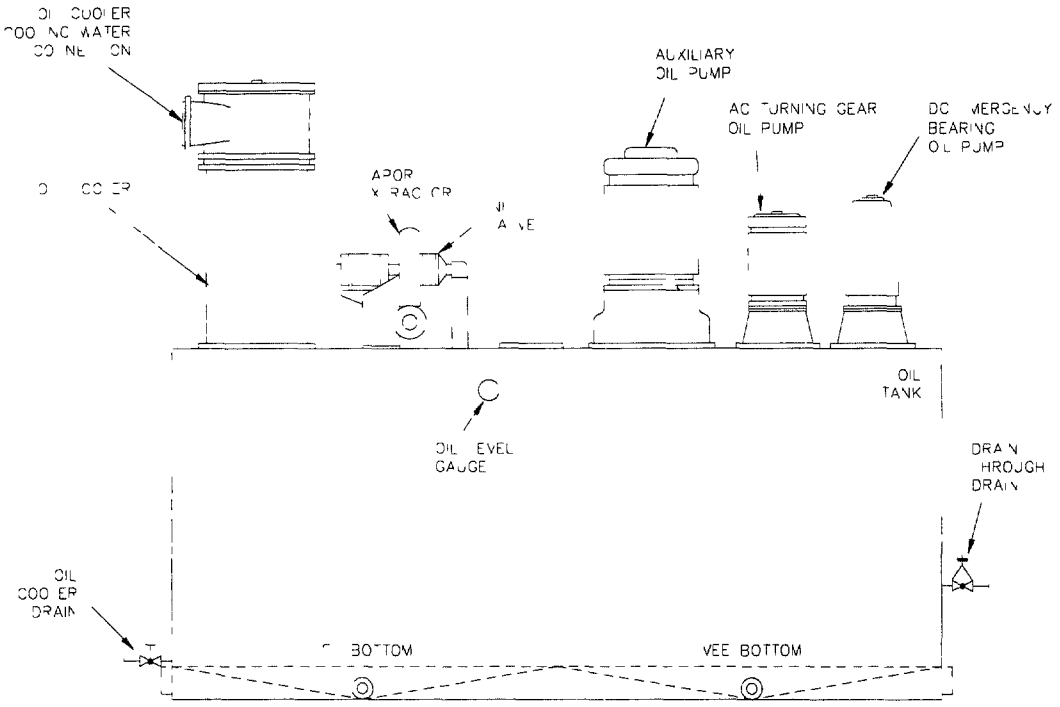

Figure 3-48 Typical GE Lube Oil System Arrangement

BEST AVAILABLE COPY

156

The tank is usually equipped with a float-operated level gauge that provides alarm signals to the control room There is also commonly a level transmitter which provides a signal to the control room There is a cabinet mounted on the top of most lube oil tanks which has gauges, pressure switches, pressure transmitters and test valves installed There is usually a low lube oil pressure alarm when the lube oil header pressure falls more than about 10 psig below normal header pressure

Main and Booster Oil Pumps/Ejectors

The main oil pump (MOP), shown in **Figure 3-49**, is a large volume, high pressure, single stage centrifugal pump driven by the HP turbine shaft and located in the HP front standard The MOP capacity and discharge pressure are much greater than the requirements for the lube oil header The excess capacity is used for the booster pump as described below The MOP takes suction from the main oil tank The discharge is piped to the lube oil coolers and the booster pump that is located in the oil tank The booster pump is necessary to pump oil to the MOP suction because the oil tank is at a lower elevation than the MOP In normal operation, when the turbine is operating at rated speed, the MOP is the source of oil for the system

The booster pumps for GE units are actually single-stage centrifugal pumps driven by oil turbines The oil turbines are driven by the high pressure oil from the MOP discharge The booster pump takes suction from the lube oil tank and discharges to provide suction to the MOP This arrangement makes the lube oil system independent of electric power in normal operation

Each booster pump is controlled by three valves The booster baffler valve is the inlet valve that controls the flow of oil from the MOP discharge to the oil turbine Pressure at the oil turbine inlets downstream of these valves is about 140 psig There is also a bypass baffler valve that controls the bypass of oil from the MOP discharge around the oil turbine to the turbine discharge that feeds the bearing header Finally, there is the bearing header relief valve at the turbine discharge These three valves in each of the two booster pumps are adjusted with the turbine is at running speed to satisfy three requirements, 225 psig MOP discharge pressure, 25 psig bearing header pressure, and 15 - 25 psig MOP suction (all measured at the turbine centerline) These valves are accessible through an access door in the top of the tank Generally, the valves do not require operator action once set

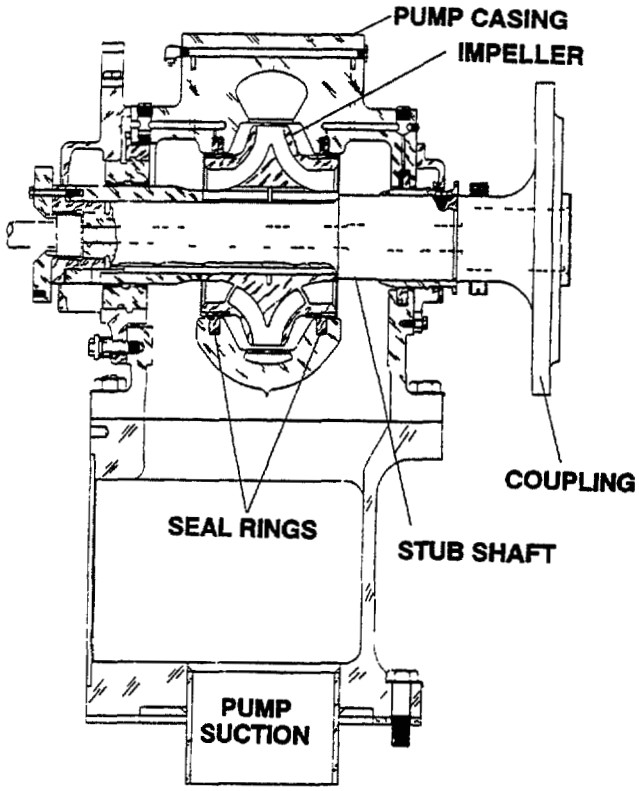

Figure 3-49 Typical Westinghouse Shaft Driven Main Oil Pump

258

Westinghouse lube oil systems do not have turbine driven booster pumps Ejectors are used in their place An ejector is a jet pump The Westinghouse lube oil ejectors use high pressure oil from the main oil pump discharge as the motive fluid The discharge from the ejectors is used to provide main oil pump suction and lube oil header pressure

Auxiliary Oil Pump

When a turbine is being started up and is at low speeds, the MOP does not supply enough oil to the booster pump to produce its own suction During this period, the AOP supplies suction to the MOP The AOP is a centrifugal, AC-motor-driven pump mounted on the lube oil tank

Lube oil is also used at about 225 psig (or 150 to 300 psig for Westinghouse units) to open and close the main steam valves This high pressure oil normally comes from the MOP that is unavailable during startup The AOP also provides the hydraulic pressure required for the hydraulics during startup

The AOP is usually started just before turbine startup until the turbine is initially loaded, and prior to shutdown If MOP discharge should fall below minimum limits in normal operation, a pressure switch automatically starts the AOP for most units The autostart feature for most units can be tested at the lube oil tank by opening a test valve on the lube oil tank console The AOP is usually manually started just before turbine shutdown and is itself shut down after the turbine is on turning gear

Turning Gear Oil Pump

The MOP cannot supply oil to the bearings for turning gear operation because the shaft is rotating too slowly (only about 3 - 5 rpm) The turning gear oil pump (TGOP) provides lube oil during turning gear operation The pump is a centrifugal type pump and is mounted on the lube oil tank It is smaller than the AOP because it supplies lube oil only to the lube oil header, not to the hydraulic system The hydraulic system cannot be operated with only the TGOP in service, therefore The TGOP is driven by an AC motor

The pump is placed in operation before the turbine is placed on turning gear and remains running until the AOP is started If the lube oil header pressure falls below the minimum acceptable, a pressure switch in the TGOP controls automatically starts the TGOP for most units The TGOP autostart feature for most units may be tested by opening a test valve on the lube oil tank console The TGOP is manually started after the turbine reaches turning gear (after which the AOP is shut down) and remains on until the turbine is taken off turning gear

DC Emergency Bearing Oil Pump

In some emergencies, the turbine is shut down when no power is available for the AC motor driven pumps, and so the turbine bearings would have no oil as the turbine "coasts down " Loss of oil causes severe damage The emergency bearing oil pump (EBOP) is a DC motor driven, centrifugal pump in the lube oil tank that supplies oil to the bearing header when this happens The DC motor is supplied with power from the station battery The electrical controls for this pump are arranged so that an overload of the pump motor results in an alarm, but does not trip the pump because it is better to ruin the DC motor than to allow the main turbine to coast down without lubrication

The EBOP may be started manually from the control room but is not used in normal operation If the MOP discharge pressure or bearing header pressure fall below minimum limits a pressure switch automatically starts the pump The EBOP autostart feature for most units may be tested by opening a test valve on the lube oil tank console

Turning Gear Interlock

The lube oil system must be in service with adequate bearing header pressure before starting the turning gear A pressure switch in the turning gear logic provides this protection Bearing header pressure must be above minimum before the turning gear may be started and if the turning gear is running the turning gear trips if bearing oil header pressure falls below minimum acceptable

Vapor Extractor

The vapor extractor is a positive displacement blower that takes suction from the oil tank and removes explosive mixtures of air, hydrogen, water vapor, and oil vapor from the tank The hydrogen results from the interconnection of the lube oil and generator seal oil systems The vapor extractor is driven by an AC motor with the control switch in the control room There is no automatic starting feature for the vapor extractor In the event that the vapor extractor trips in operation, a control room alarm is usually annunciated

The vapor extractor has a bypass line from the discharge back to the top of the lube oil tank A valve in this bypass line can be adjusted to control the vacuum in the lube oil tank and the lube oil system The vacuum should be set with a manometer to about 1/2 to 1 1/2 inches of water below atmospheric pressure The vacuum should be no higher than necessary to prevent the escape of oil vapor or oil leakage If the vacuum is too high, excessive dust and dirt are drawn into the system past the oil deflectors

The vapor extractor usually exhausts to a roof vent through an oil trap or mist eliminator This mist eliminator drains to a loop seal that in turn drains the dirty oil to waste The vapor extractor should be in operation whenever there is hydrogen in the generator

Westinghouse units are generally much more likely to have oil fires in the event of failure of the vapor extractor As a result, many Westinghouse units have two vapor extractors and the backup vapor extractor often is started automatically

Lube Oil Coolers

There are two 100% capacity shell and tube type oil coolers installed at the main lube oil tank In normal operation, one cooler is valved out and the other receives the discharge from whichever pump is supplying oil to the bearing header There is a transfer valve used to shut off oil to one oil cooler while the other is in service

26.1

Figure 3-50 shows a simplified lube oil cooler with a U-tube bundle The cooler has a continuous vent that discharges through an orifice into the tank Oil from the booster pump or alternate cooler can be admitted directly to the coolers through a filler or interchange valve Whenever a cooler is placed into service, the filler or interchange valve should first be opened, and the vent discharge checked to be sure the cooler is filled The discharge of the vent may be observed through an screw type cover plate on the top of the tank between the two coolers

The lube oil coolers are connected to the booster pump discharge and bearing header with a three-way transfer valve like that shown in **Figure 3-51** The flow of the lube oil to and from the coolers is controlled by a double 3-way valve which is mounted on the lube oil tank in front of the oil coolers This special 3-way valve has two valves in one body, one valve for the oil entering the coolers and the other for the oil leaving the coolers The valve disk is a tapered plug with passages for both valves so that both valves share a common stem

The 3-way changeover valve operating mechanism has two components, a jacking handwheel and a changeover handwheel which are located on the top of the lube oil tank in front of the lube oil coolers In normal operation the valve plug is seated in its fit Before the changeover handwheel can be operated, the plug must be lifted out of its fit by turning the jacking handwheel counterclockwise (no more than 2 revolutions) The changeover handwheel lever can then be operated easily The ports in the valve disk are arranged so that the oil flow to and from the old cooler are opened before the ports to and from the old cooler are closed This valve sequence assures that oil flow is not interrupted during the changeover This arrangement also makes it possible to leave the valve in mid-position to place both coolers in service at the same time, although this is seldom done unless cooling water temperature is high After the valve is in the new position, the jacking handwheel is turned in the clockwise direction to seat the plug once again

It is very important to assure that <u>before</u> placing a new cooler in service it is filled with oil If a cooler to be place in service were to be airbound, a bubble of air could be introduced into the lube oil header Such an air bubble could cause momentary interruption in lube oil flow and severe damage to the turbine bearings

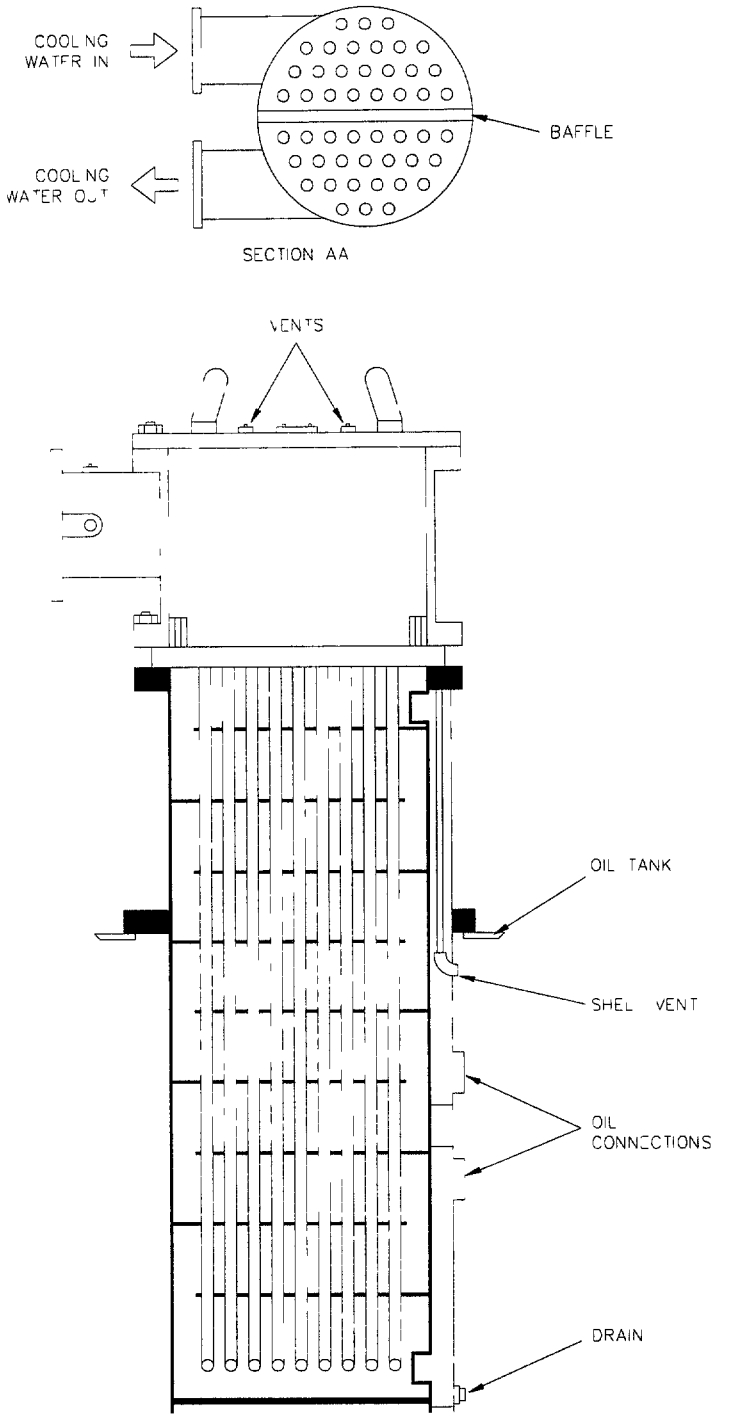

Figure 3-50 Simplified U-Tube Lube Oil Cooler

263

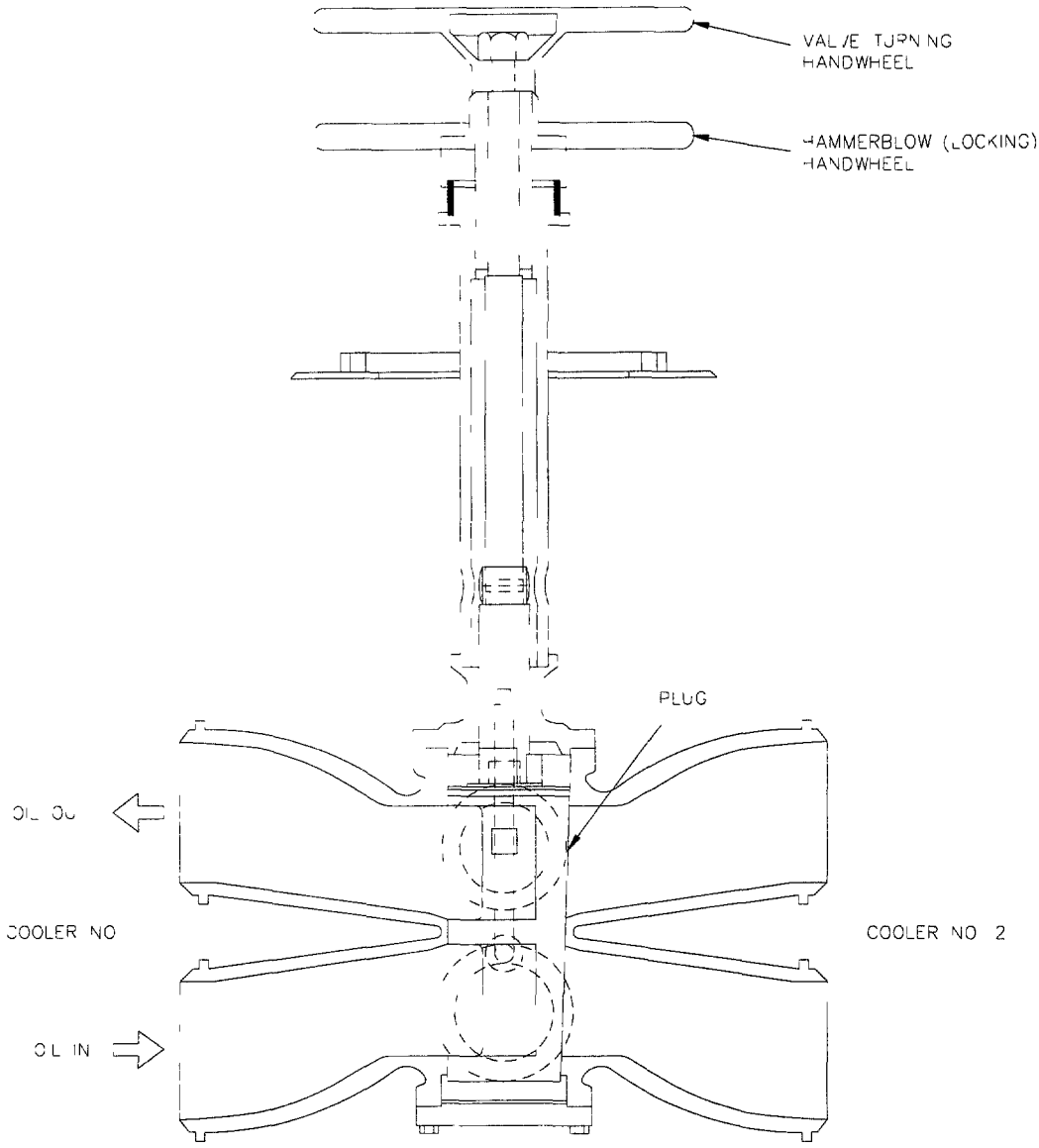

Figure 3-51 Typical Lube Oil System Transfer Valve

244

The cooling water for the lube oil coolers is usually controlled individually by air operated, temperature control valves The controls for these valves are usually located in the control room Lube oil temperature should be maintained at about 90°F while on turning gear At startup, the temperature should be at least 100°F before increasing turbine speed above 3000 rpm Normal temperature while at rated speed is about 115°F Alarms for lube oil are typically 130 F for the lube oil header and 155°F for the oil draining from any bearing

Lube Oil Purifier

The lube oil system is normally equipped with a bypass filtration system A separate pump takes suction from near the top of the lube oil tank as shown in **Figure 3-52** This feature assures that the lube oil tank cannot be drained inadvertently by the lube oil purifier The purifier pump discharges back to the tank.

3 4 2 Lube Oil System Operation

Regardless of the manufacturer or the details of the design of the lube oil system, there are many operational concerns that are common Lubrication for bearings is of obvious importance The turbine bearings position the rotor with respect to the stationary parts of the turbine If the rotor turns in its bearings without lubrication, metal to metal contact occurs This contact causes frictional heating that in turn causes the bearing babbitt to soften and be "wiped" out of the steel liner Once the soft babbitt is wiped out of the bearing, the rotor turns against the steel liner and becomes badly scored In addition, the rotor "falls" a distance equal to the thickness of the babbitt, usually about 1/8 to 1/4 inch Because the running clearances inside the turbine are much smaller than this distance, the rotor contacts and rub against the internal components, usually causing considerable damage

If only one journal bearing is wiped on a unit with several journal bearings, generally damage will be confined to those parts of the turbine closest to that bearing If the thrust bearing is wiped, however, the entire turbine is affected because it maintains the axial position of the entire unit Failure of the thrust bearing usually results in axial rubbing and severe damage throughout the turbine

265

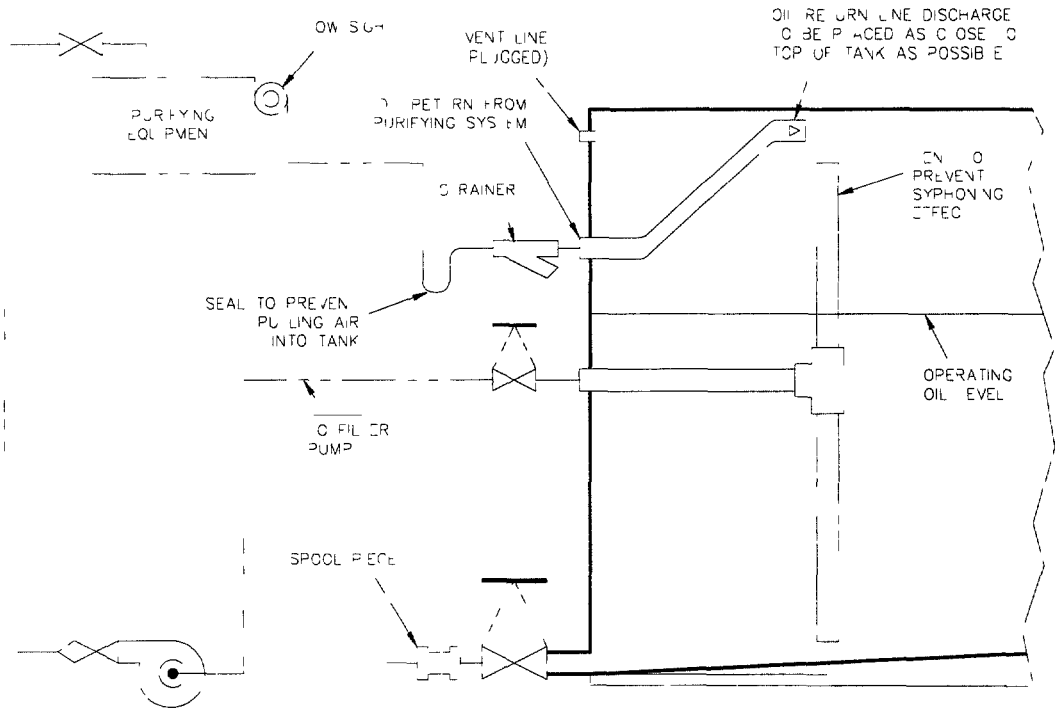

Figure 3-52 Typical Lube Oil Purifier Connections

266

Oil that is supplied to the bearings must be clean and at the proper temperature Dirty oil is the most frequent cause of bearing damage Oil is kept clean by avoiding introduction of dirt into the system, operation of the lube oil filtering system, and keeping strainers and screens clean

Introduction of dirt into the system can be minimized by maintaining only the minimum required vacuum in the lube oil tank This minimizes the amount of dust and debris drawn into the system between the shaft and oil seals

It is important to keep the lube oil at the proper temperature During turning gear operation, oil that is too hot can be too thin to maintain an oil film between the journal and bearing because of the slow speed, even though the film may be adequate at running speed Metal to metal contact and bearing damage can result

In operation, oil that is too cold is so thick that it can cause a phenomenon called "oil whip " Oil whip is characterized by very high vibration resulting from bearing instability The proper oil temperature for turning gear operation is about 90°F and for normal operation about 115°F The temperature is controlled by modulating valves controlling cooling water flow through the lube oil coolers

When the lube oil is cold and the turbine is shut down, the only way to heat the oil for most turbines is through operation of the motor driven pumps Lube oil tank heaters are uncommon The AOP is used for this purpose because the AOP is the largest of the motor driven pumps in the system and so generates the most heat from losses

Cooling is another important function of the lube oil system Bearings would quickly heat up due to friction without cooling and, because most babbitt softens at about 300°F, damage would quickly result This is true when the unit is shut down as well as in operation If the unit is removed from turning gear immediately after the turbine is shut down, the rotors are hot enough to melt babbitt Lube oil provides enough cooling to prevent melting

Damage to bearings may be detected by unusually high vibration, high bearing metal temperatures, and high bearing oil drain temperatures Another indication of damage is pieces of babbitt (a silvery, soft, nonmagnetic metal) in oil screens, strainers, or sight boxes

26 1

Generally, the temperature and cleanliness of the oil is adequate for the other devices served by the system, if the requirements for the bearings are satisfied The cleanliness of the oil in the lube oil system is maintained by the oil filtration and storage system

Lube oil systems employ vapor extractors that remove oil vapor, water vapor, and hydrogen (from the seal oil system) from the main oil tank They also provide a slight vacuum on the lube oil tank that prevents oil vapor from leaking out of the tank

Also, since all of the lube oil drain piping from the standards is connected to the top of the tank, the vapor extractors provide the same negative pressure in the standards to prevent oil vapor from leaking past the oil deflectors

It is important to understand the consequences of operation without a vapor extractor Air that has high humidity is constantly drawn into the lube oil system at the oil deflectors even if the vapor extractor is not running Additionally, water sometimes enters the system through lube oil cooler leaks Since the oil is hot, water that enters the system normally evaporates If the vapor extractor is not in service to remove the water vapor, water can condense and mix with the oil

When water is carried into the lube oil system, corrosion of various components occurs Perhaps the most serious area for corrosion in the turbine controls and main steam valve servomotors If there is corrosion in these components, the turbine main steam valves may fail to close upon a turbine trip and a destructive overspeed condition can result

Another possible consequence of failure of a vapor extractor is oil fires at the bearings If the vapor extractor is not in service, oil vapor can leak out into the turbine hall at the bearings Since hot turbine parts are close to the oil seals/deflectors, fire is a common hazard

Finally, failure to operate a vapor extractor, for units with hydrogen cooled generators, can cause a hydrogen explosion The lube oil system serves the generator bearings as well as the turbine bearings There are tiny bubbles of hydrogen entrained in the oil that drains from the generator bearings to the lube oil

tank Over time the hydrogen can accumulate in the main lube oil tank and form an explosive mixture Operation of the vapor extractor is essential, therefore, whenever there is hydrogen in the generator

There is one caution in the operation of the vapor extractor, however If there is leaking steam near oil seals/deflectors, the vapor extractor should be shut down to avoid drawing the steam into the lube oil system This may occur if the gland seal system exhauster(s) fail

3 5 Gland Steam, Drain and Exhaust Hood Spray Systems

The turbine gland steam and drain system is actually two separate but related systems The function of the gland steam system is to seal the turbine where the turbine rotor penetrates the casing These seals must be capable of keeping air out of the turbine as well as preventing leakage of steam from the turbine The turbine drain system drains condensate from the low points in the turbine Accumulation of water in the turbine can lead to damage from water induction One of the low points that is drained by the drain system is the gland seal steam supply The exhaust hood spray system sprays condensate into the exhaust hood during startup and periods of low load operation to control the temperature of the long blades in the LP turbine

3 5 1 Gland/Steam Seal System

Gland Steam System Principles

There are two different types of seals used in steam turbines, pressure and vacuum, as shown in **Figure 3-53** For pressure seals, there are many rings of packing and as many as three leakoffs, followed by a chamber connected to the steam seal header, and another chamber connected to the steam seal condenser header In normal, full-load operation, steam leaks outward The steam pressure falls steadily as the steam leaks past each ring of packing The chamber connected to the steam seal header is always held at a constant pressure of about 3-5 psig Steam which leaks outward from the steam seal header chamber leaks into the steam seal condenser chamber which is held at a constant pressure slightly less than atmospheric pressure (about 10 to 15 inches of water vacuum) This chamber draws a small amount of air in from the outside and so steam never leaks out into the turbine hall

267

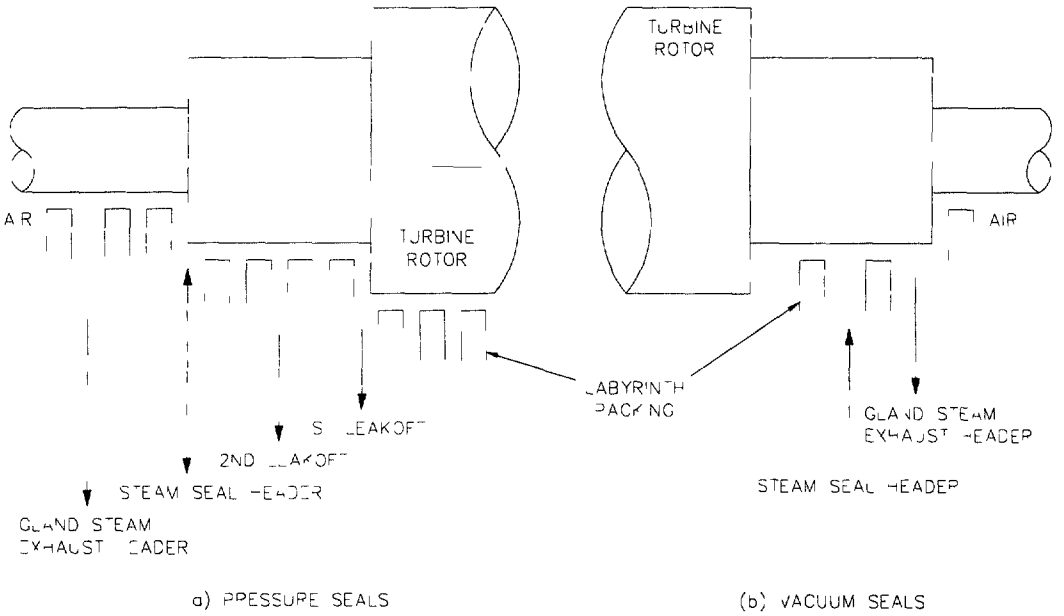

Figure 3-53 Simplified Pressure and Vacuum Seals

270

In normal operation steam leaks into the gland steam header Before the turbine is started up, however, there is a vacuum in the turbine Under these conditions, steam leaks into the turbine from the gland steam header which is still held at the same 3-5 psig The flow of steam to the gland steam condenser chamber remains the same regardless of whether the packing is sealing against pressure or vacuum Thus the pressure packing can seal against either pressure or a vacuum

A vacuum seal is used in the low pressure turbines where (for condensing units) the seal is always necessary to seal against a vacuum Vacuum seals usually have only three rings of packing forming two chambers, the inner one connected to the gland steam header and the outer connected to the gland steam condenser header

The seals for valve stems are similar to those for the turbine, except that closely fitting bushings are used instead of labyrinth packing The bushings have a clearance of about 0 003 to 0 015 inch and so the pressure of the steam is lowered as it leaks between the stem and the bushing As with shaft packing, the bushings generally have a break to form a chamber where steam is allowed to leak off The end of the sealing arrangement may use soft packing, as shown in **Figure 3-54**, or may be connected to the steam seal header and/or the steam packing exhauster header, depending on the pressure which is being sealed against

The sealing arrangement also differs depending on whether or not the valve is a controlling or non-controlling valve Non-controlling valves are generally either fully open in normal operation, or fully closed, when the unit is shut down Such valves often have a backseat which seals the stem against any leakage when fully open Such valves (such as intercept and reheat stop valves), sometimes do not have connections to the steam seal header or steam seal condenser since there is normally no leakage Instead, the leakoff(s) is piped to an open funnel drain so that leakage past the backseat can be easily detected

271

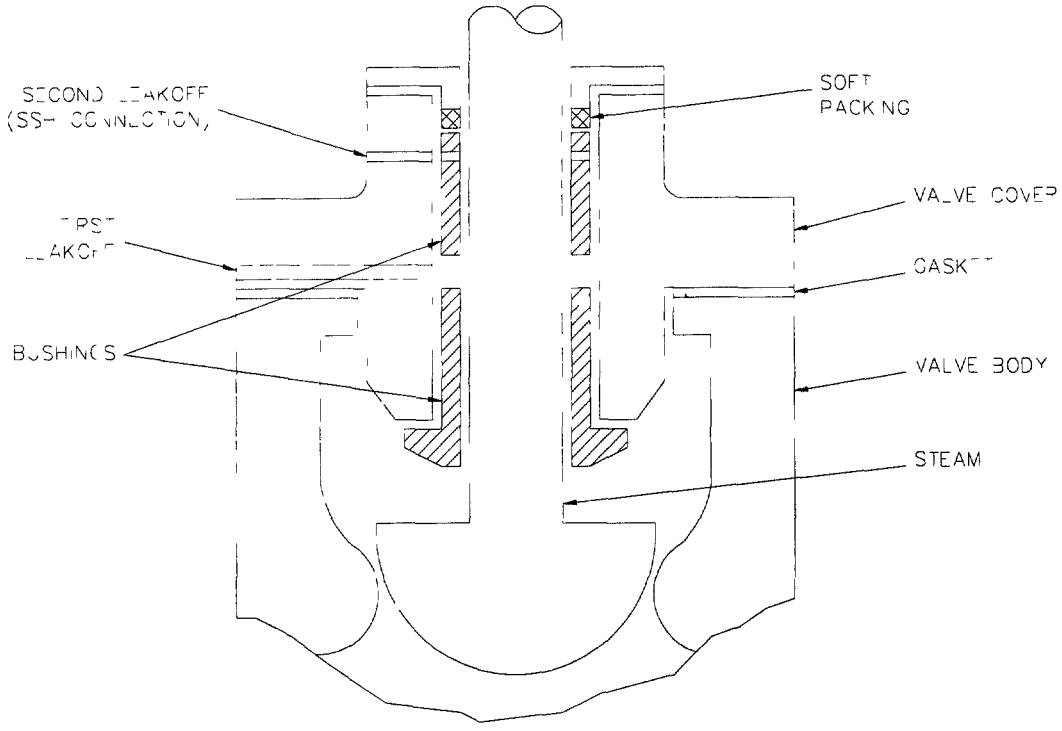

Figure 3-54 Simplified Valve Stem Bushing Arrangement

Gland Seal Piping and Valves

The gland seal system has two separate but related piping systems, the gland seal header and the gland steam exhauster header The gland seal header pressure is maintained at a pressure of about 3 to 5 psig while the gland steam exhauster header is generally maintained at about -15 inches of water A simplified view of a typical system is shown in **Figure 3-55**

The gland seal header has at least two pressure control valves to maintain pressure within the required range One of these valves is a steam feed valve that admits steam to the gland seal header at low loads to maintain pressure during the period when, because there is a very low pressure everywhere inside turbine, both the pressure and vacuum seal require sealing steam The pressure control range for the gland seal feed valve is typically about 3 to 4 psig, it is fully opened at 3 psig and is fully closed at 4 psig The source of sealing steam is usually steam from the steam generator, upstream of the TV/MSV

The second pressure control valve, usually called the unloading or spillover valve, generally has a pressure control range of about 4 to 5 psig, fully closed at 4 psig and fully opened at 5 psig Steam from the unloading valve is usually piped to the condenser Bypass valves are installed around the pressure control valves to allow manual pressure control when the pressure control valves are not operating properly or excessive seal leakage exceeds the valves' capacity

Examination of the operation of the gland seal header valves system as the turbine is started and loaded illustrates the important aspects of its operation The system is placed in service after the turbine is on turning gear and just before starting the condenser as a removal system to pull vacuum The gland seal feed valve opens to admit steam when the system is first placed in service When the turbine is started and the pressure at the pressure packings increases, the steam requirement for the pressure packings decreases Therefore, the pressure in the gland seal header tends to increase, but the gland seal feed valve modulates in the closed direction to maintain a nearly constant pressure When the turbine reaches a high enough load, steam leaks into the steam seal header from the pressure seals

213

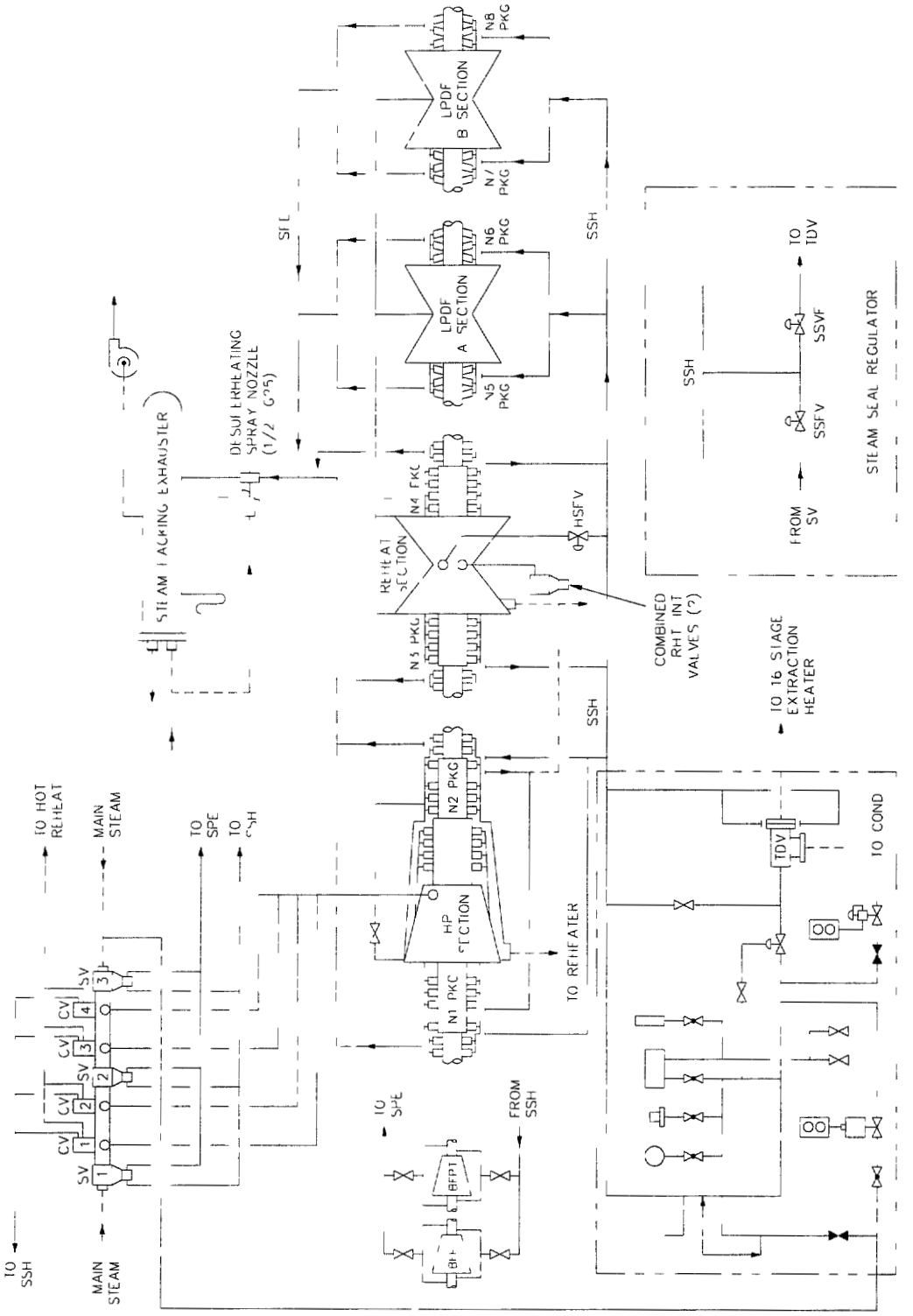

Figure 3-55 Simplified GE Gland Seal System

As the load continues to increase, the turbine load reaches a "break even point" where the steam leaking into the gland seal header from the pressure seals is exactly enough to supply the requirements of the vacuum seals At this break even point the gland seal feed valve should be closed

When the turbine load increases above the break even point, the pressure in the gland seal header tends to increase further The unloading valve then starts to open to port the excess steam from the gland seal header

There are several different features that are seen in some gland seal systems First, many Westinghouse gland seal systems have more than one source of steam for the gland seal header, each of which has a separate pressure control valve Where this arrangement is used, steam from the steam generator upstream of the TV/MSV is used when the turbine is started up and cold reheat steam is used after the cold reheat pressure increases to the point where is can supply the needs of the gland seal header The two pressure control valves used in this arrangement have different pressure control ranges Typically the pressure control valves for the first valve might be about 3 psig to 3 75 psig, 3 75 to 4 25 psig for the cold reheat valve, and 4 25 to 5 psig for the unloading valve

Another feature used for most Westinghouse turbines is attemperating sprays in the gland seal header for the vacuum seals Attemperation is used to cool the seal steam that is piped to the vacuum seals because the operating temperature of these seals is relatively low (around 230°F) High thermal stress results without attemperation since the temperature of the steam in the gland seal header is generally much higher, especially when the gland seal feed valve is open

A feature seen in some GE units is a three way diverting valve (TDV) downstream of the unloading valve The TDV ports steam to the condenser at low loads and to a feedwater heater at high loads The TDV position is changed from the condenser to the feedwater heater extraction when the pressure at the turbine extraction increases above that of the gland seal header so that steam does not back up into the turbine from the gland seal header

2 15

The gland exhauster header piping system is less complex than the gland seal header system because there is no change in the amount or direction of flow, regardless of turbine load The partial vacuum in the gland exhauster header is created by a blower that is installed on the shell of a heat exchanger The shell and tube type heat exchanger is called the gland steam condenser (GSC) The blower takes suction on the shell side of the GSC The gland exhauster header is also connected to the shell side of the GSC and this connection establishes the partial vacuum in the gland steam condenser header

Condensate from the condenser hotwell is usually used as the cooling fluid for the GSC condenser Use of condensate reduces operational flexibility, however, since the condensate system must be in service before the gland seal system can be placed in service Some units have another source of cooling water to the GSC (such as bearing cooling water) to avoid this constraint

As soon as the gland steam header is pressurized, steam leaks into the outermost annulus of both the pressure and vacuum seals where the gland steam exhauster header is connected Steam and air are drawn into the gland exhauster header When the mixture reaches the GSC, the steam in the mixture is condensed and the air is exhausted (usually to a roof vent) by the blower The condensate from the GSC is generally drained to the condenser

Gland Seal System Operation

The gland seal system must be in service any time that the turbine is in service It is placed in service before the condenser air removal system is placed in service to prevent air from leaking into the condenser Placing the gland seal system in service allows a vacuum to be established in the condenser The GSC blower is generally placed in service before the steam is admitted to the gland steam header to avoid steam leakage at the seals

The gland seal system must remain in service until the turbine is shut down <u>and there is atmospheric pressure on the condenser (vacuum is broken)</u> If the gland seal system were to fail while the turbine were in service, steam would leak from the pressure seals and air would leak into the condenser at the vacuum seals The

76

turbine would probably trip because of low vacuum under these circumstances If the gland seal system were to be shut down after the turbine were tripped, but before breaking vacuum in the condenser, cold air would be drawn into the hot turbine at the seals This would cause high thermal stress

For some units, the external source of sealing steam has a very low pressure during startup Where this is the case, the gland seal header pressure may not be adequate even when the feed valve opens fully It may be necessary to open the feed valve bypass valve in these instances to increase the gland steam header pressure

The gland seal systems is usually designed to be able to function with worn labyrinth seals If the seals become very badly worn, however, the sealing steam requirement at low loads increases and at high loads the leakage of steam into the seal header increases If the seals are very badly worn, the increased leakage may require that the feed valve bypass valve be open at startup and the unloading valve bypass opened at high loads in order to maintain the gland seal header pressure within the normal operating range

3 5 2 Exhaust Hood Sprays

Exhaust Hood Spray Principles

The tips of turbine blades travel at very high velocities The velocity of the longer blades, which are found in the low pressure turbine, is greater than that of shorter blades The last stage blades may have a tip velocity of as much as 1200 miles per hour

Whenever an object travels through a gas, such as air or steam, at such high velocities, the object is heated by aerodynamic heating Aerodynamic heating is caused by the friction of gas molecules as they pass over an object, causing heating similar to that produced by solid surfaces rubbing together If blades are heated too much, their temperature becomes so high that the metal strength is lowered and damage occurs

Another factor unrelated to aerodynamic heating can aggravate the tendency for the low pressure turbine to be overheated at low loads That is that the reheat temperatures are relatively high (compared to flow) at low loads This tends to increase the temperature of the steam in the low pressure turbine Because the low pressure turbine last stage blades are the longest, these blades travel at the highest speeds Therefore, these blades become hotter than the shorter blades in the turbine Although bucket temperature should be monitored, there is no satisfactory way to measure the temperature of blades directly with permanently installed instruments

When the blades become hot, however, the blades heat the exhausting steam and the exhaust hood This heating is the major reason that exhaust hood temperature is monitored If the exhaust hood temperature rises above acceptable limits, it is a good indication that the blades are too hot

The function of the exhaust hood spray system is to prevent the LP turbine blades/buckets from overheating The buckets/blades of the low pressure turbine are cooled, when necessary, by spraying cool water through the exhaust hood spray nozzles, which resemble shower heads, near the last stage blades The spray creates a cloud of cool mist near the last stage buckets/blades At low loads there is a negative pressure near the root of the last stage buckets/blades (a phenomenon called negative root reaction), and so the cool mist is carried upstream one or two stages in the LP turbine

Exhaust Hood Spray Piping and Valves

A typical exhaust hood spray piping and valve arrangement is shown in **Figure 3-56** The source of water for the exhaust hood spray water is usually condensate from the condensate pump discharge The condensate is piped to an air operated exhaust hood spray valve The water spray valve usually has shutoff valves installed at the inlet and outlet and has a bypass valve The discharge from the water spray valve is piped to ring manifolds that are mounted on the ends of the LP inner casings Nozzles are connected to the ring headers and are aimed to spray water in the area of the LP exhaust annulus

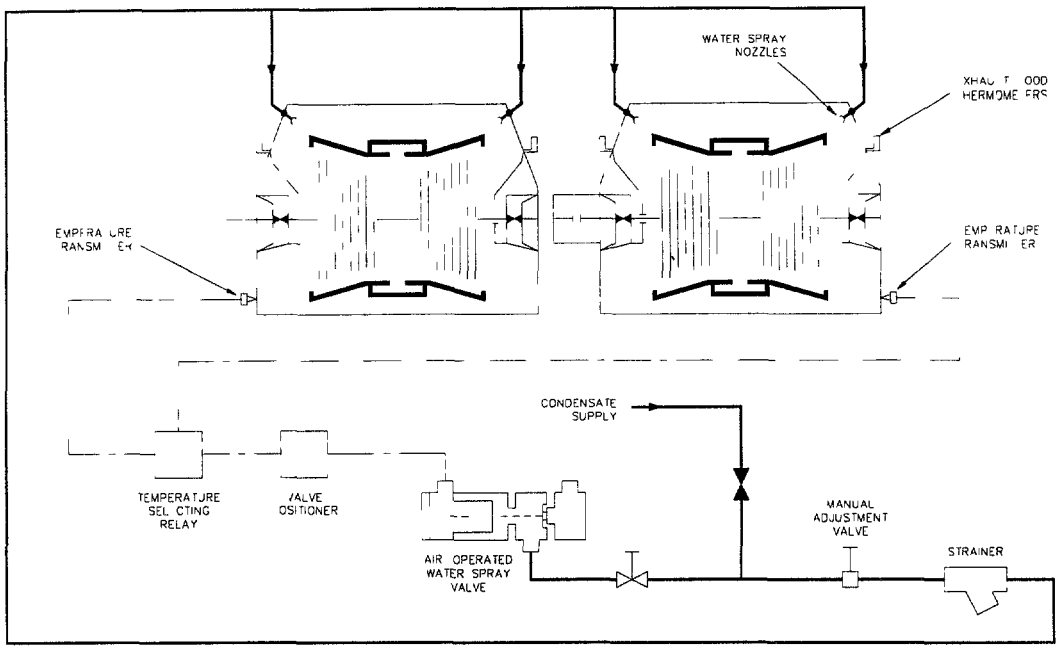

Figure 3-56 Typical Exhaust Hood Spray System

279

The operation of the exhaust hood water spray valve (WSV) is usually automatic The control scheme for the WSV depends upon the vintage of the turbine, Older turbines use some indication of turbine load, usually GV/CV position as a signal to open the WSV at low load (usually about 5 to 15% of rated load), and close it above the opening load setpoint In this control scheme, the WSV does not modulate The WSV is either fully open or fully closed Since the WSV does not modulate, the turbine may be very hot when the WSV opens to admit relatively cool condensate This can cause high thermal stress in the turbine

Newer units usually employ a more sophisticated control scheme for the WSV A temperature transmitter that senses exhaust hood temperature is used to control a modulating WSV position In this control scheme, the WSV starts opening around 140°F exhaust hood temperature and is fully open around °160 F This control scheme is an improvement since it avoids the potential for thermal shock to the turbine that exists using a WSV that does not modulate

Exhaust Hood Spray Operation

The exhaust hood spray system should be operated with care to avoid two problems The first problem is thermal shock It is common for operators to open the WSV bypass in many plants If it is necessary to open the WSV bypass valve, it should be opened slowly when exhaust hood temperatures are high to avoid the potential for thermal shock as described earlier

The second problem is erosion The water droplets from the exhaust hood sprays causes erosion of the last stage buckets Excessive erosion can result if the sprays are used when they are not needed This problem can occur if the WSV bypass is inadvertently left open

3 5 3 Turbine Drains

Drain System Principles

The basic "principle" associated with the drain system is the fact that it is undesirable for many reasons to allow water to accumulate anywhere in the turbine or turbine related piping Water can enter the turbine from various sources, however one of the most common sources of water is condensation of steam One

280

consequence of water in piping as seen in many piping systems, is water hammer Water hammer is usually precipitated by water flashing to steam Another possible consequence is thermal shock, which occurs when cold water hits relatively hot turbine components Thermal shock can cause distortion and misalignment of the turbine components Finally, if water hits the rotating blades of a turbine, severe damage, including loss of rotating blades, can occur The introduction of water to the turbine is usually referred to as water induction

The drain system serves another function that is not obvious A small warming steam flow is established when the drains are opened during startup and the turbine and piping are first pressurized

Drain System Piping and Valves

Drain systems are very simple Low spots in the turbine, valves, and related piping have drain connections installed These drains are generally piped to the condenser with drain control valves in the drain line Water drains from the low spots by gravity Generally the drain valves are opened when the turbine is shut down and during initial starting As the turbine heats up and the steam flow through the turbine and piping increases, there is no possibility of condensation and so the drain valves are closed to prevent the loss of steam Typical locations for drains include the following

- TV/MSV before seat drains
- TV/MSV after seat drains
- Main steam lead drains (for units with steam chests not mounted on the turbine shell)
- Turbine shell (usually at the first stage or impulse chamber)
- RSV/LPSV before seat drains
- RSV/LPSV after seat drains
- Extraction piping drains

Drain System Operation

All turbine drains should be fully opened any time the turbine is shut down The only exception to this rule is for long outages in which the turbine has been allowed to cool The drains are closed during startup as the load and temperatures increase to the point where condensation is no longer possible Keeping the drain valves closed in normal operation saves steam that would otherwise be bypassed to the condenser and wasted The drain valves are opened when the turbine is shut down Typical recommendations for closing the various drain valves during startup are as follows

- Main steam lead and TV drains may be closed when HRSG temperatures (and superheat) assure that there can be no carry over of moisture to the turbine
- The LPSV line drain may be closed when the ICV position exceeds 5% open
- All other drain valves should remain open until the turbine reaches 20% load

The above guidelines can be applied in reverse for the opening of the valves as the turbine is shut down

3 6 EHC Hydraulic System

Older turbine-generators use high pressure lube oil as the hydraulic fluid for the main steam valve actuators This arrangement is most common for units that have MHC (Mechanical Hydraulic Controls) Newer units usually have EHC (Electro-Hydraulic Controls) systems which have a separate hydraulic system This Section describes features that are found in most EHC hydraulic systems

The EHC hydraulic fluid system usually operates at pressures between 1800 and 2150 psig The use of a separate high pressure hydraulic fluid system makes it possible to build hydraulic servo motors that are considerably smaller and more

compact than the actuators that are used in most lower pressure MHC systems The use of a separate fluid system also makes it possible to better control the cleanliness of the hydraulic fluid, an important consideration given the importance of the role that the main steam valves play in overspeed protection Finally, the use of a different fluid in the hydraulic system makes it possible to use a fire resistant fluid near the hot main steam valves, thus improving safety

Most turbine EHC hydraulic systems have a central hydraulic pumping unit that consists of a fluid reservoir, pumps, coolers and other systems components Some older turbines have been retrofitted with EHC actuators, each of which has its own reservoir and pump, however this arrangement is very uncommon A typical system with a central hydraulic pumping unit is described in this Section

3 6 1 EHC Hydraulic Fluid

The fluid used in almost all turbine EHC hydraulic systems is called Fyrquel, a trade name from the manufacturer, Stauffer Chemical It is a synthetic phosphate ester fluid No other fluid is approved for use in these systems This fluid has three important properties that all personnel should be aware of

1 The fluid is toxic, especially if ingested or gotten into the eyes Smoke from burning fluid is also toxic

2 The fluid is fire resistant <u>but will burn</u> under the right circumstances (such as, soaked in hot pipe insulation)

3 The fluid is an excellent solvent and dissolves most electrical insulation and seal material Only approved seals (Viton) may be used Spills, especially on electrical insulation, must be cleaned up promptly

Cleanliness of the EHC fluid system is very important and the standards of cleanliness are even greater than that for the lube oil system The chemical properties of the fluid as well as the level and size of particulate contamination is important In order to help maintain the quality of the fluid in the system all of the piping and components are of stainless steel

3 6 2 EHC Hydraulic System Components, Piping and Valves

The heart of the EHC hydraulic system is the hydraulic pumping unit (HPU) The HPU is usually a skid mounted unit like that shown in **Figure 3-57** with piping arranged as shown in **Figure 3-58** The HPU consists of a reservoir upon which the high pressure fluid pumps are mounted The reservoir, which is fabricated from stainless steel, is equipped with a level gauge and level switches for high and low level alarms

For GE units, an enclosure around the outside of the reservoir has space heaters installed that are controlled by thermostats that sense fluid temperature The thermostats usually have a setpoint of about 80°F This indirect method of heating the hydraulic fluid is used because immersion heaters have the potential for overheating the fluid which could result in degradation of the fluid

Westinghouse also installs heaters in the HPU However, immersion heaters are usually used by Westinghouse despite the potential for fluid degradation

Contamination of the EHC fluid is of concern because the EHC fluid pumps are positive displacement and have very close clearances Also, other components in the system, including servo valves and hydraulic actuators have small fluid passages and close clearances Accordingly, the system is equipped with many features to assure cleanliness One of these is magnets installed in the EHC fluid reservoir to capture magnetic particles

Usually the HPU has two, 100% capacity high pressure fluid pumps The high pressure hydraulic fluid pumps take suction from the reservoir through filters or strainers Where strainers are used, there is often a magnet installed to protect the pumps and other system components Suction strainers are often equipped with differential pressure indicators to provide indication when the strainer is dirty

A pressure switch that monitors high manifold pressure to provide a signal to automatically start the backup pump in the event that the running pump discharge pressure falls below the autostart setpoint Other pressure switches provide low system pressure alarm and trip functions

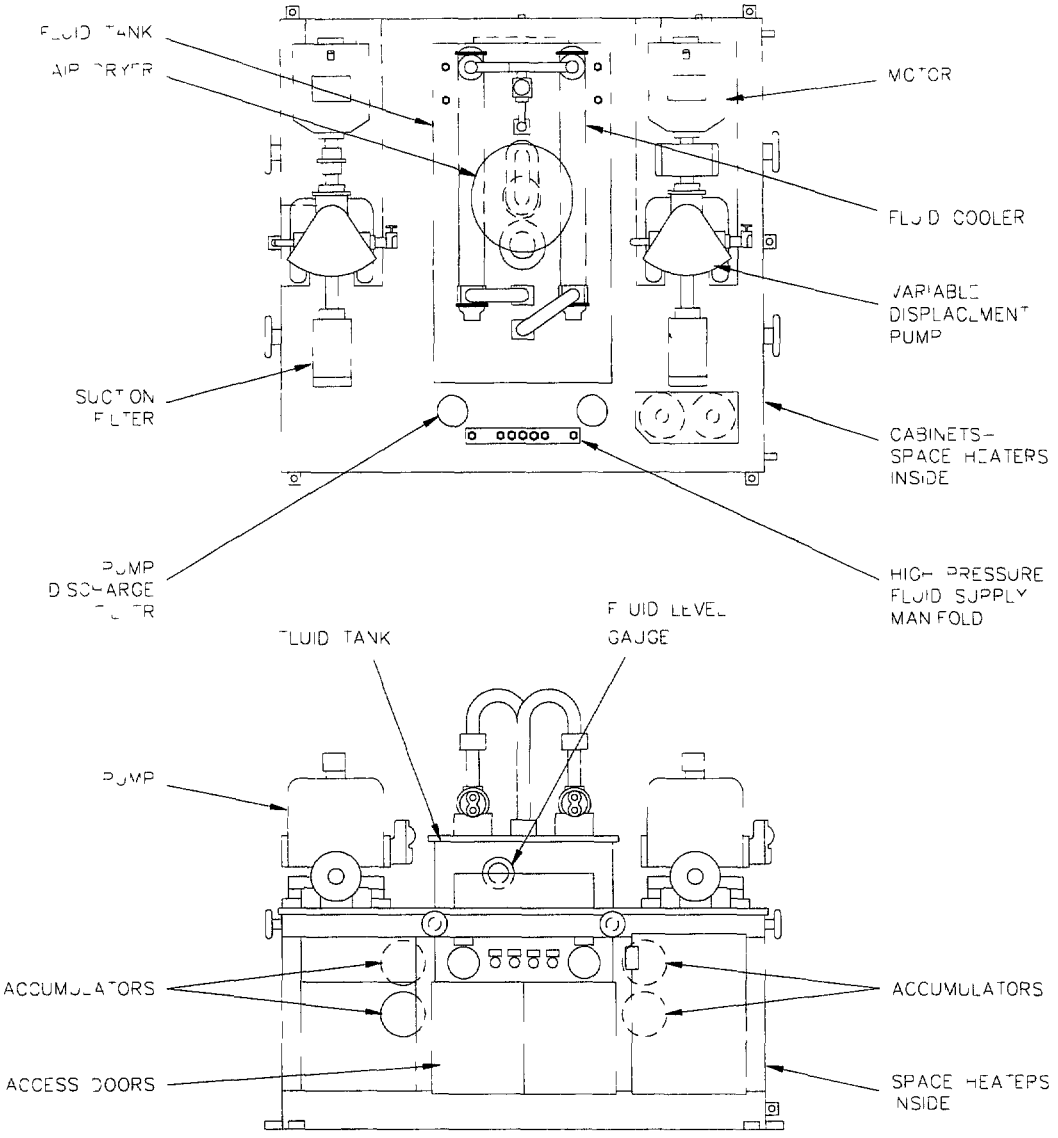

Figure 3-57 Typical GE EHC Hydraulic Pumping Unit

285

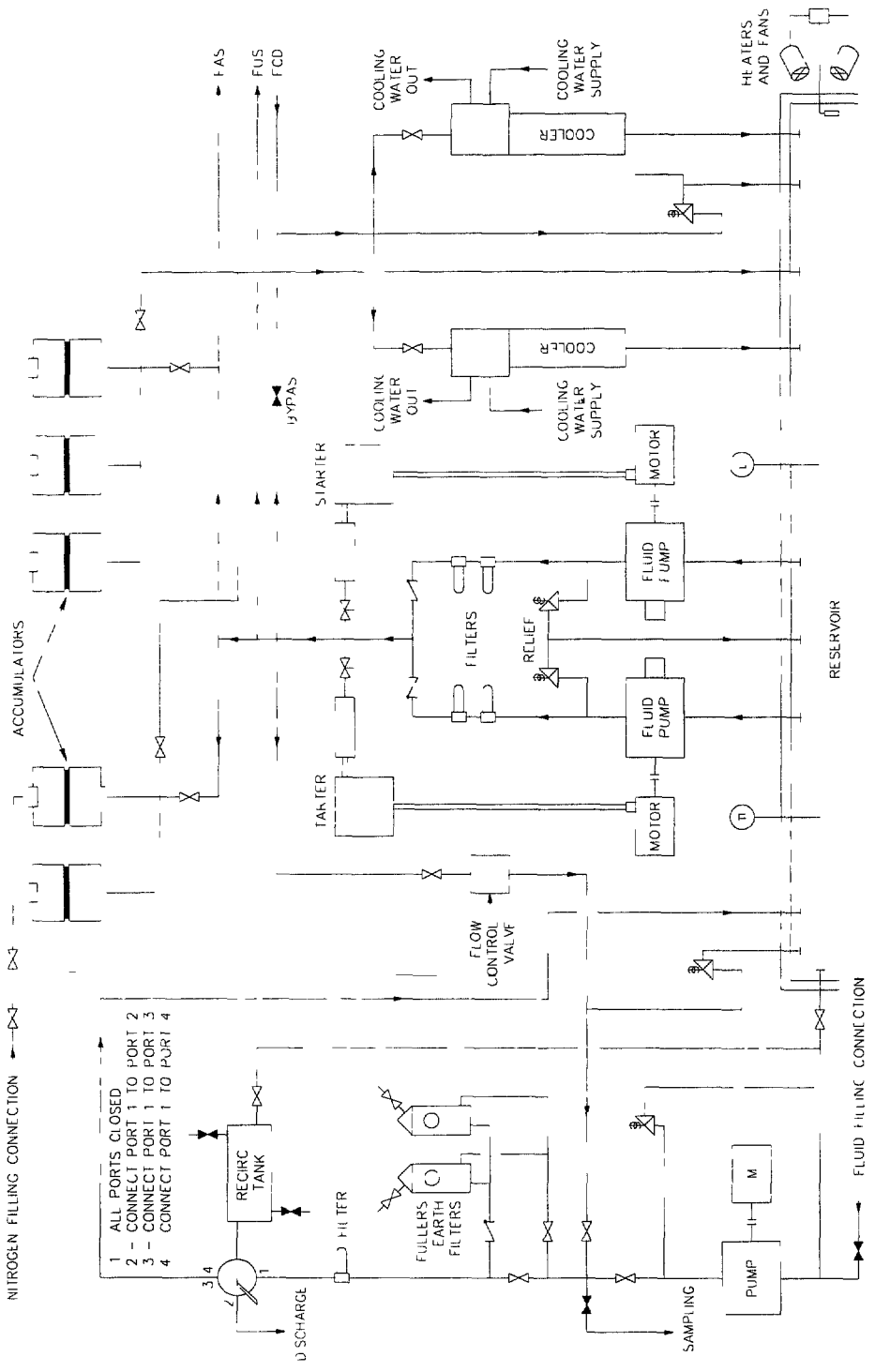

Figure 3-58 Typical GE HPU Piping Schematic

286

The high pressure pumps are positive displacement type, usually using pistons The use of positive displacement pumps is dictated by the high pressure at which the system operates The use of positive displacement pumps creates a problem, however The flow required by the system varies considerably in operation When the turbine is in normal operation at steady state there is little or no movement of the main steam valves and thus the fluid flow requirement is very low The fluid flow requirement increases considerably during transients in turbine operation, however, which require the main steam valves to move, often through full stroke Since most positive displacement pumps deliver constant flow, some means must be employed to accommodate the wide range of flow requirements

GE EHC hydraulic systems usually use piston type pumps with a variable stroke A pressure controller, called a pressure compensator, is used to modulate the stroke of the pump to control pump discharge pressure

Westinghouse uses fixed displacement pumps with loading and unloading valves The loading valves direct the pump discharge to the high pressure manifold when the header pressure falls below a setpoint, usually about 1800 psig When the manifold pressure increases to the high setpoint, usually about 2150 psig, the loading valve closes and the unloading valve opens to port the pump discharge to the reservoir, bypassing the high pressure manifold This system has the characteristic, therefore, that the pressure constantly fluctuates over a range of about 250 psig

Another design feature that helps address the problem of wide variations in flow that is common to almost all EHC hydraulic systems is the use of accumulators Typically, an accumulator consists of a piston and cylinder High pressure fluid is admitted to one end of the cylinder The other end of the cylinder is pressurized with nitrogen gas, usually to 1000 psig, before the fluid is admitted When the high pressure fluid is admitted to the cylinder, the piston is free to move and compress the nitrogen gas to the same pressure as the hydraulic fluid When system pressure falls due increased flow requirements the hydraulic system pressure decreases and the nitrogen expands, pushing the piston out again to supply high pressure fluid to supplement the flow from the pump

Some HPU use bladder type accumulators In the bladder accumulator, a flexible bladder is inflated inside the accumulator shell with nitrogen, usually at 1000 psig High pressure fluid is admitted to the accumulator to compress the bladder When the system pressure falls the bladder expands, forcing high pressure fluid out, like the piston type accumulator, to supplement the pump flow

The EHC fluid pumps usually have cartridge type filters at their discharge These filters commonly are rated at about 5 microns The discharge filters are usually equipped with differential pressure switches or indicators to alert the operators when they become dirty When excessive pressure differential indicates a dirty filter, the backup pump should be placed in service, the pump with the dirty filter shut down, and the dirty filter replaced

The HPU is usually equipped with a bypass valve that dumps fluid from the high pressure manifold directly to the reservoir This bypass valve is very important in operation because the bypass valve is used to depressurize the system It is necessary to depressurize the system every time the high pressure pumps are shut down because after the accumulators are charged, the accumulator can keep the system pressurized, often for up to an hour, <u>after</u> the pumps are shut down It is good operating practice, therefore, to open the bypass valve as a matter of routine every time the pumps are shut down The bypass valve is then closed after the pumps are started to repressurize the system

The high pressure manifold from the EHC hydraulic pumping skid is piped to each of the main steam and bypass valve actuators EHC fluid is also piped to the controls that are usually located in the front pedestal

Hydraulic fluid that drains from the main steam valve actuators and the controls is drained back to the reservoir The fluid draining flows through a fluid cooler that is mounted on the tank before entering the tank itself There are usually two, 100% capacity coolers installed There are often relief valves at the cooler outlets that keep the drain line pressurized in operation The drain line is pressurized so that if there is a fluid cooler leak, fluid leaks into the cooling water rather then water into the fluid Severe damage the EHC hydraulic system components can result from contamination with water

EHC HPUs are usually equipped with a bypass filtration or polishing system In some cases a small portion of the fluid from the high pressure manifold is piped to the bypass filter which then discharges to the reservoir In other cases, like that shown in **Figure 3-59**, a small filtering pump takes suction from the reservoir to pump fluid through the filter and back to the reservoir

The bypass filtering system has special filters that remove contaminants as well as particles from the fluid This is required because as the fluid degrades, acids and other chemicals are produced that can damage hydraulic system components The material most often used to remove these contaminants is Fuller's Earth Fuller's Earth is a special filtering material that helps remove moisture and chemical contaminants from the fluid A backup filter is installed downstream of the Fuller's Earth filter to prevent Fuller's earth from escaping and contaminating the system Pressure gauges are installed to allow monitoring of the differential pressure across the filters as an indication of filter cleanliness

Fuller's earth is actually the remains of tiny shell fish called diatoms Recently a new synthetic filtering material called Selxsorb has been introduced as a replacement for Fuller's Earth

The bypass filtering system is often equipped with provisions for sampling fluid from the reservoir and for filling and draining the reservoir In filling and draining operations, care should be used not to use hoses made of materials that are dissolved by the hydraulic fluid A special hose of a safe material is often supplied with the HPU for this purpose

3 6 3 EHC Hydraulic System Operation

The EHC hydraulic system must be placed in service before the turbine is started up and remains in service until after the turbine is shut down It is important to assure that the EHC fluid temperature is above the manufacturer's minimum recommended operating temperature before starting the high pressure fluid pumps Failure to observe this precaution can result in collapse of the filters due the high viscosity of the fluid at low temperatures Severe contamination of the fluid system can result from collapsed filters

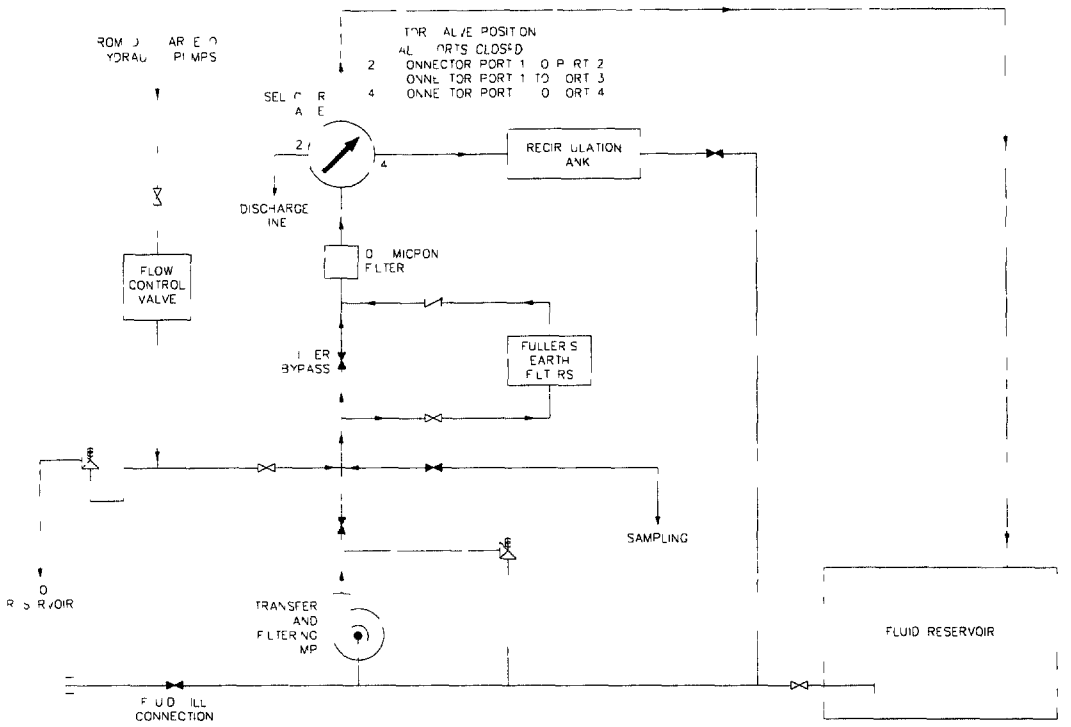

Figure 3-59 Typical GE Transfer and Fuller's Earth Filtering System

290

As explained earlier, the hydraulic system can remain pressurized for a long as an hour after the high pressure pumps are shut down The system bypass valve should be opened every time that the high pressure pumps are shut down The valve is closed again when the system is started up, after a pump is started

The operation of the HPU should be checked periodically Suction strainers and discharge filters with differential pressure indications should be checked for indication of clogging Similarly, the bypass filters should be checked for clogging Another check that is commonly performed by maintenance personnel is the nitrogen charge pressure of the accumulators If this pressure is too low, the backup high pressure pump may start and/or the unit may trip due to low hydraulic pressure during transients with high demand

3 7 Turbine Supervisory Instrumentation

The turbine is provided with a number of instruments that provide the operations personnel with indications and alarms associated with critical turbine operating parameters **Figure 3-60** shows typical TSI instrument locations This instrumentation is referred to collectively as the Turbine Supervisor Instruments (TSI) This Section describes each of these instruments and the significance of the information that they provide

3 7 1 Vibration

Vibration probes are usually mounted at all of the turbine bearings There are also vibration probes that are mounted at the generator bearings and the exciter bearing One common type of probe is the magnetic, non-contacting, proximity type Each probe is mounted close (about 0 040 inch) to the shaft adjacent to the bearing being monitored The probe is connected to electronics that excite the probe and demodulate the signal from the probe to display vibration amplitude as a displacement (in mils, one mil is 1/1000th of an inch) through the DCS

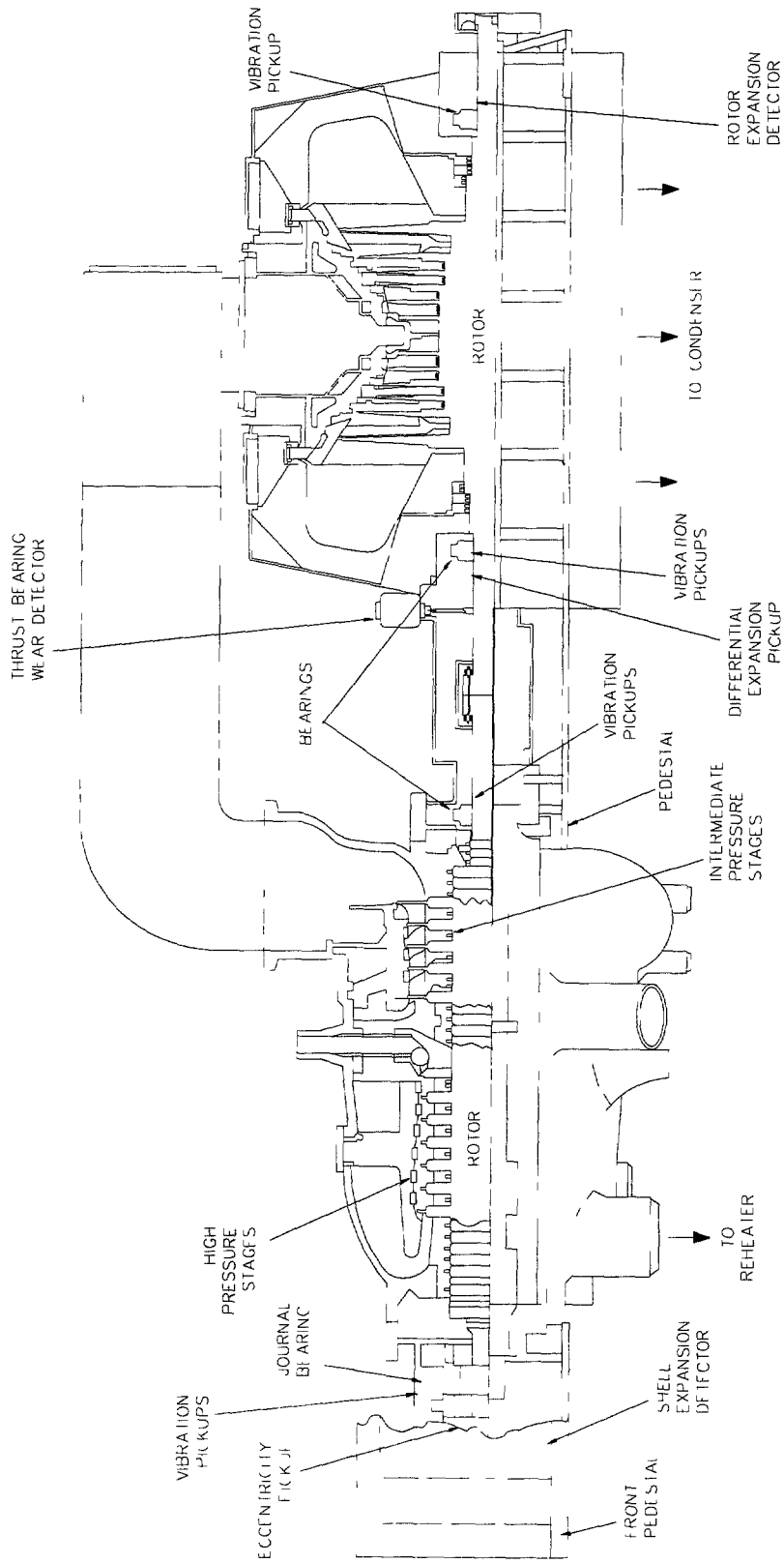

Figure 3-60 Typical TSI Instrument Locations

296

Other units use shaft riding probes Shaft riding probes have a low friction tip that rides on the shaft at the bearing A spring holds the tip in contact with the shaft The tip is connected to a moving magnet that moves inside a coil of wire When the shaft vibrates, the magnet moves in the coil of wire and produces a voltage proportional to the magnitude of the vibration

The vibration phase angle is associated with vibration amplitude The vibration phase angle is the angular location of the vibration "high spot" with respect to a fixed reference point The reference point is a bolt or a small slot machined on the rotor in the governor pedestal A magnetic pickup generates a signal each time the belt or slot passes by as the shaft rotates The signal that is generated is called the key phasor The vibration phase angle is useful in diagnosing the cause of vibration and in the event that there is imbalance, in balancing the turbine rotor

3 7 2 Casing Expansion

It was explained earlier that the governor pedestal slide axially as the turbine casing temperature changes in operation It is important that the governor pedestal slide freely because otherwise serious damage can result If the pedestal were to become stuck on one side, for instance, there would be misalignment of the thrust bearing

The casing expansion detector is used to monitor the position of the governor pedestal with respect to the foundation plate An LVDT (linear variable differential transformer) or a rheostat is the instrument used

3 7 3 Differential Expansion

The turbine components experience thermal expansion and contraction as the turbine heats up from room temperature to full load operation temperature Thermal expansion is also experienced as the turbine load is changed Generally the turbine rotor responds more quickly than the casing to changes in temperature because the rotor is less massive than the shell The rotor is also exposed to steam all around its surface Thus, if there is a sudden increase in steam temperature, the rotor grows faster than the casing If the difference in growth is too great, the axial alignment of

the rotor with respect to the stationary turbine components, is upset and there is axial rubbing This situation is called a rotor long condition The same thing can happen in reverse if there is a sudden drop in steam temperature Such a situation is called a rotor short condition

The differential expansion detector is mounted in the turning gear pedestal outboard of the #2 bearing to monitor differential expansion It often consists of a non-contacting probe similar to those used to monitor vibration mounted in the axial direction to "look at" a collar mounted on the shaft

3 7 4 Rotor Position

The axial alignment of the rotor is maintained by the thrust bearing, and so this parameter indicates the condition of the thrust bearing Excessive rotor movement is indicative of excessive wear in the thrust bearing

The rotor position detector is similar to the differential expansion detector The rotor position detector usually consists of a non-contacting probe mounted in the axial direction to look at a collar mounted on the turbine rotor The probe is mounted on the thrust bearing housing in the governor pedestal so that it provides an indication of the movement of the rotor with respect to the thrust bearing

3 7 5 Eccentricity

The turbine rotor is very heavy and made of steel which, while very strong, is also surprisingly flexible Thus, when the turbine rotor is supported by bearings at its ends, it sags in the middle in the same way, but to a lesser degree, as a clothes line This sag also occurs at room temperature, and the magnitude of the sag becomes greater when the temperature of the turbine is far above room temperature If the turbine rotor is allowed to remain at rest, the sag becomes greater than it is while the rotor is turning, and a temporary bow develops in the rotor This bow disappears after the turbine rotor is turned for some time and this is the principal reason that the turbine is equipped with a turning gear If the rotor has been at rest for a long time (more than about 30 minutes) it may take 4 to 6 hours of turning gear operation before the temporary bow is entirely removed

When a temporary bow exists, the center of gravity of the rotor is displaced from the center of rotation Thus, if the turbine is started while the temporary bow exists, there will be high vibration and possible damage to the turbine due to internal rubbing and/or damage to the bearings

The amount of bow in the rotor can be measured by measuring the eccentricity (sometimes called the runout) of the turbine rotor The eccentricity increases as the bow increases Turbine shaft eccentricity is measured by a non-contacting probe that monitors the gap between the probe and a ring mounted on the end of the turbine rotor in the governor pedestal Any change in the shaft straightness alternately increases and decreases the gap between the ring surface and the pickup, thus alternately increasing and decreasing the electrical signal which is sent to the TSI electronics

The eccentricity of the rotor has meaning only when the turbine is at low speeds Once the turbine speed increases, any eccentricity reading would first be detected as bearing vibration Accordingly, the TSI electronics automatically cut off the eccentricity signal to the recorder either when the turning gear disengages or when the turbine speed reaches 600 rpm

3 7 6 Speed

Speed is usually sensed using a small PMG (Permanent Magnet Generator) non-contacting magnetic probe and a toothed wheel The toothed wheel resembles a gear The non-contacting probe is mounted close to the toothed wheel As each tooth passes by the probe, a magnetic signal is generated The frequency of the signals is directly proportional to speed TSI electronics count the rate of the signals and convert their frequency to a speed signal The same arrangement that is used for the TSI is also used for the zero speed indication (used to start the turning gear automatically) and the EHC

3 7 7 Turbine Temperatures

Thermocouples are installed at many locations in the turbine casing, valves and piping These temperatures are important in operation of the turbine because much of the turbine manufacturer's recommendations regarding operation deal with limits

on temperature, temperature differentials and rates of temperature change The following is a listing of the locations of those thermocouples

- Throttle valves #1 and #2 metal
- First stage base and cover metal
- First stage steam
- LP exhaust hood steam
- HP gland steam
- LP gland steam
- Induction port base and cover metal
- Induction inlet valve steam
- Induction steam (cover)
- Casing flange and bolt

3 8 Turbine Starting and Loading Instructions

Turbine manufacturers provide starting and loading instructions (SALI) for their turbines The SALI commonly does not address the generator There is considerable information about the overall operation of the turbine covered in the SALI, however perhaps the most important single area is that is covered is operation to minimize thermal stress Thermal stress is a concern in the operation of almost all large power plant components, however in the overall operation of the plant during startup, the turbine often is the limiting factor in operation This section is a review of thermal stress in a turbine and then the specifics of a typical SALI

3 8 1 Thermal Stress

Thermal stress is caused by a difference in temperature in a body Whenever a body, whether it is a turbine rotor or a water glass, is heated or cooled there is some thermal stress generated because it is impossible to heat the body in such a way that all parts of it are at the same temperature This fact is illustrated graphically by the behavior of a piece of metal being heated by a candle in **Figure 3-61**

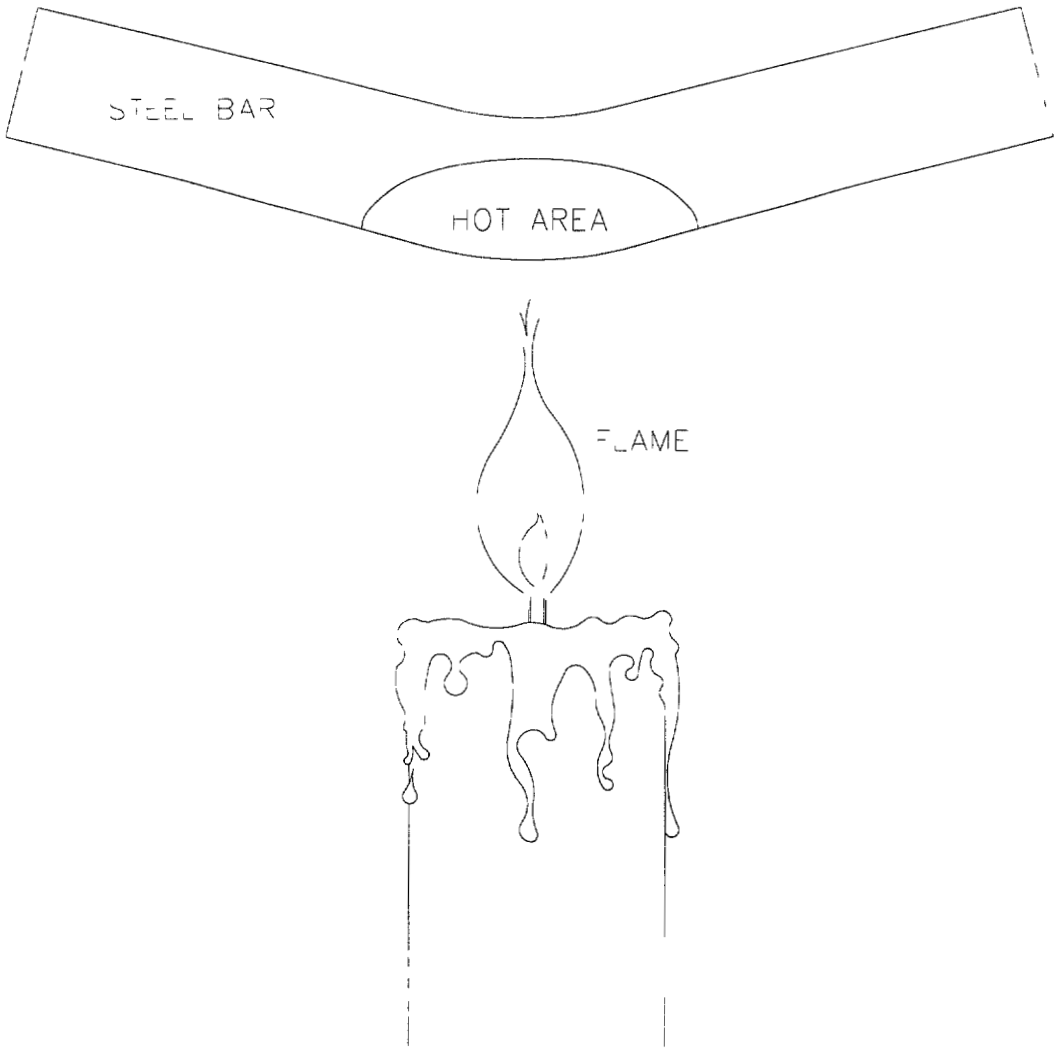

Figure 3-61 Thermal Stress in Heated Metal Pipe

Application of the heat on the bottom of the piece of metal results in the bottom expanding while the still cool top lags behind The resulting differential expansion causes the piece of metal to bend upward If the stress from this temperature difference is too great, it causes the material to crack Clearly it is desirable to reduce the stress below the point where the metal cracks The operator should always make an effort to control and minimize thermal stress, within the other operational limitations of the plant The operator has three means of controlling thermal stress

1 Reduce temperature differential The magnitude of the thermal stress depends upon the difference in temperature that the body sees For example, if in the start of a cold turbine, the temperature difference between the hot steam entering the turbine and the turbine metal is reduced, the stress is reduced

2 Apply the heat uniformly The temperature difference in a body can be reduced by uniform, rather than spot application of heat In the turbine, thermal stress is reduced by using full arc admission of steam (steam admitted to all parts of the nozzle at once) instead of partial arc admission (steam admitted to only one or a few nozzles) on startup

3 Control the rate of temperature change If, when heating a body, the rate of application of heat is reduced, the heat has a chance to conduct through the body This reduces the temperature difference and the thermal stress

The starting and loading instructions are designed to help the operator to minimize thermal stress There are other considerations besides that of thermal stress, however The first of these considerations is fatigue

3 8 2 Fatigue and Cyclic Life Expenditure

Whenever metal is subjected to a cycle of stress which is applied and then removed, it undergoes fatigue After a large number of cycles of stress, the metal fails at stresses which are far less than normal The number of cycles of stress that the metal can undergo until a failure is likely is called the cyclic life of the metal

In addition, if there is a flaw in the metal such as a crack, the crack tends to grow a little each time the metal undergoes a cycle of stress It is possible to predict how quickly the crack will grow, and thus determine the point at which a failure is likely, if the amount of thermal stress is known The amount of thermal stress is determined by how much the temperature changes and how quickly it changes If the temperature change is very large and it occurs over a short period of time, the thermal stress is very high If the same temperature change is made, but over a longer period of time, the thermal stress is lower

These principals are consolidated in the concept of cyclic life expenditure (CLE, a GE term, also called fatigue index by Westinghouse) To illustrate the use of the CLE further, consider the methods and practices used by turbine manufacturers in applying the concept of cyclic life in their SALI

When the stresses and cyclic lives of the various turbine components are analyzed, the high pressure rotor is usually the limiting factor when compared to the other components such as the shells and valves It would be desirable to monitor the temperature of the rotor at its hottest location to determine cyclic life expenditure This is not done, however, due to the difficulty of installing and reading a thermocouple on a rotor The next best temperature indication is on the inner shell at the first stage for the high pressure rotor which is very close to the rotor temperature

It is possible to determine the cyclic life expenditure of a turbine rotor for given inner shell temperature changes over a period of time The cyclic life expenditure as a function of rate of temperature change Turbine manufacturers provide a nomographs in their SALI charts that allows the operator to determine the allowable rate of change of temperature the rotor for a selected cyclic life expenditure A typical nomograph is shown in **Figure 3-62** The temperature of the turbine rotor before and after the temperature change must be known The temperature before the temperature cycle can be determined from the temperature recorders in the TSI The temperature after the temperature cycle must be estimated based upon operating experience with the unit The amount of CLE to be used is usually determined by planners who determine the maximum allowable CLE expenditure possible to assure that turbine does not develop cracks prematurely during the life of the plant

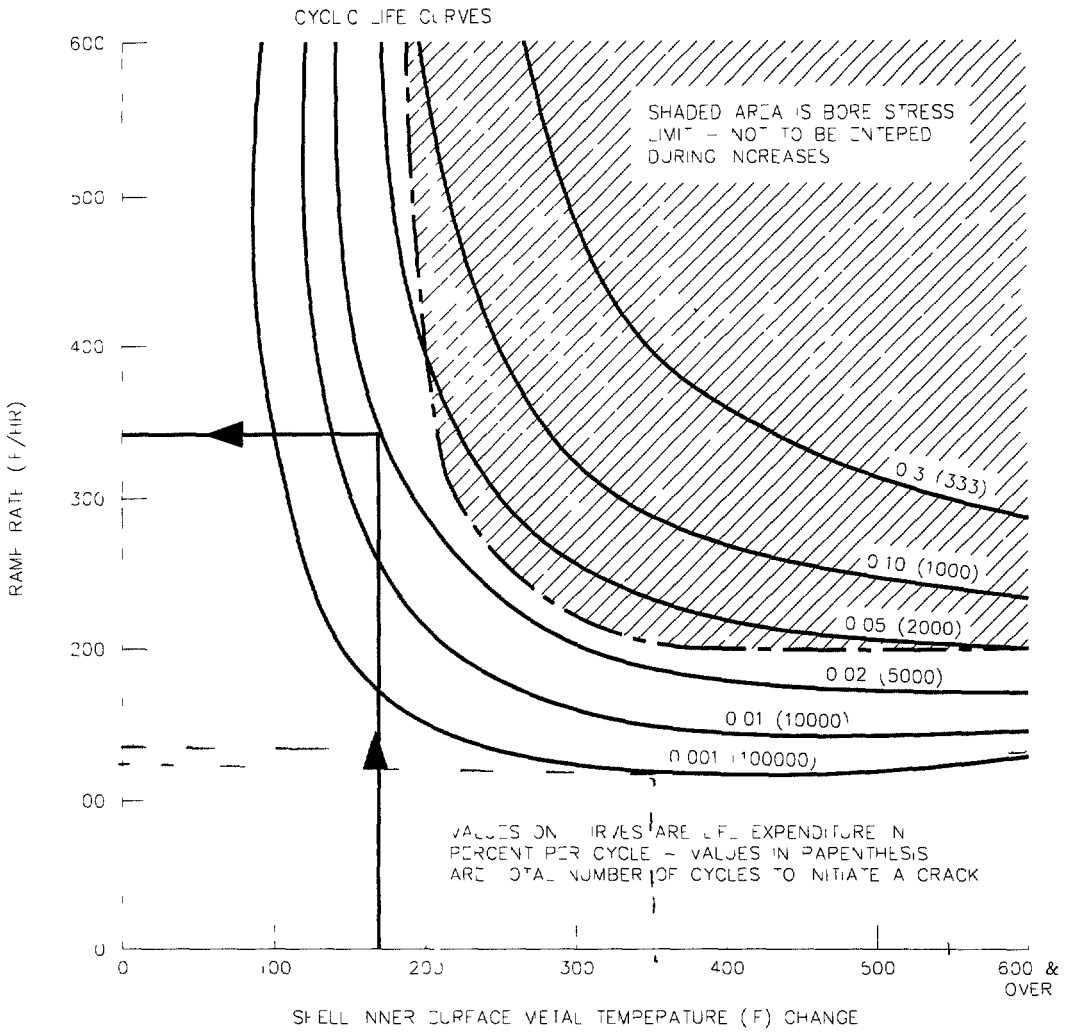

950
-200
750

950
460
550

950
600
350

Figure 3-62 Typical GE Cyclic Life Expenditure Curves

$\frac{750}{140} = 5.4$ hrs

$\frac{350}{120} = 3$ hrs

300

So far in this discussion it has been implicit that thermal stress is a concern when increasing temperatures as would occur at the startup of a unit That is because, in general, the greatest likelihood for excessive thermal stress and its damage is during a startup It is very important, however, that the operator be aware that thermal stress is just as important a consideration in downward temperature ramps In fact, in the event that there is a crack in the surface of the rotor, severe downward temperature ramps are particularly bad because when the surface of the rotor is chilled, the crack is opened up and grows deeper into the rotor

3 8 3 Fracture Appearance Transition Temperature

Turbine manufacturer's SALI also incorporate precautions associated with Fracture Appearance Transition Temperature (FATT) The FATT is significant in operation because of the importance of brittleness of turbine materials Materials tend to be brittle, like glass, at low temperatures, and become less brittle as their temperature increases For the high alloy steels used in turbine rotors, there is a particular temperature called the Fracture Appearance Transition Temperature (FATT), below which the steel is very brittle, and above which it becomes much less brittle If there is a crack in the rotor, and the rotor is subjected to stress below the FATT, the crack will tend to grow very quickly and the possibility of the rotor bursting is greatly increased If the same stress is applied at a temperature above the transition temperature, the rate of growth of the crack is much slower, and the steel is much tougher, making the likelihood of a rotor burst much less

GE SALI calls for heating turbine rotors above 300°F to avoid operation below the FATT It is implicit in Westinghouse SALI that operation above 250°F is adequate to stay above the FATT Both manufacturers recommend that, before the turbine is subjected to the centrifugal stress of full speed operation, the turbine speed should be held at what is called a "heat soak speed" (around 2300 rpm) for a period of time to allow the turbine rotor to heat up before accelerating to rated speed Furthermore, to ensure that the entire rotor is warmed through to the bore, overspeed tests must not be done until the rotor bore is heated above the FATT Recommendations provided by the turbine manufacturers to meet this requirement vary Typically they call for the turbine to be operated at 10% to 25% load for from 4 to 6 hours

3 8 4 Typical Starting and Loading Instructions

The SALI provided by turbine manufacturers typically consists of written instructions and recommendations and nomographs (or charts) This Section describes a typical Westinghouse SALI as an example

Normal Startup Sequence

The startup sequence begins with the assumption that the turbine is on turning gear, that the gland seal system is in service and there is a vacuum in the condenser The HRSG is operated along with the HP and LP bypass to satisfy the requirements for startup as follows

- Minimum throttle pressure 300 psig
- Minimum 100°F superheat
- Requirements for cold start per STARTUP STEAM CONDITIONS AT TURBINE THROTTLE satisfied if first stage metal temperature is less than 250°F
- Requirements for limiting moisture in LP turbine per MINIMUM THROTTLE TEMPERATURE TO LIMIT LP EXHAUST TEMPERATURE are satisfied

The condenser vacuum should be as low as possible but in any event it must satisfy the requirements of the EXHAUST PRESSURE LIMITATIONS chart which allows operation up to 600 rpm with 15 inches Hg abs pressure (about 15 inches of vacuum)

The turbine is rolled off turning gear and accelerated to rated speed In the event that the steam is hotter than the turbine it is possible that there is a heat soak hold at about 2300 rpm (for 10 minutes) and another at 3600 rpm (for another 10 minutes) Following synchronization, there may be a minimum load hold as well (of up to 60 minutes) In the event that the turbine is hot (as might occur in a restart immediately after a trip from full load operation), there are no speed or load holds and the turbine is brought to rated speed in only 10 minutes

The turbine is rolled off turning gear TV control with the GVs opened fully This provides for even warming of the first stage during startup, this mode of operation is called full arc admission Control is changed from TV to GV control (from full arc to partial arc admission) at 3425 rpm

Once the turbine reaches rated speed the generator is synchronized Following the minimum load hold (if required), the load is increased to the target load The rate of load increase is controlled to manage the fatigue index (cyclic life) of the turbine using the LOAD CHANGING RECOMMENDATIONS chart This same chart should be used for all load changes after the startup has been completed

Startup Steam Conditions at Turbine Throttle

The first chart that would be used in planning and executing a startup is the STARTUP STEAM CONDITIONS AT TURBINE THROTTLE chart shown in **Figure 3-63** This chart has three curves on it, one showing the saturation curve, one showing the line for 100°F superheat and the last (at the top) showing the high temperature limit for cold start steam conditions A cold start is defined as one in which the first stage metal temperature is less than 250°F The cross hatched area between the high temperature limit and the 100°F superheat line gives the range of acceptable steam conditions for a cold start The objective of this chart is to provide the operator with a way to determine what pressure and temperature should be established for startup

Minimum Throttle Temperature to Limit LP Exhaust Temperature

The next chart that is used in planning and executing a startup is the MINIMUM THROTTLE TEMPERATURE TO LIMIT LP EXHAUST TEMPERATURE chart shown in **Figure 3-64** The concern here is that if the throttle steam temperature may be so low that moisture will form prematurely in the LP turbine This also results in more total moisture Excessive moisture can cause erosion The point at which moisture forms is dependent upon the throttle steam conditions and the exhaust pressure Accordingly the nomograph takes throttle pressure, temperature and condenser pressure into account

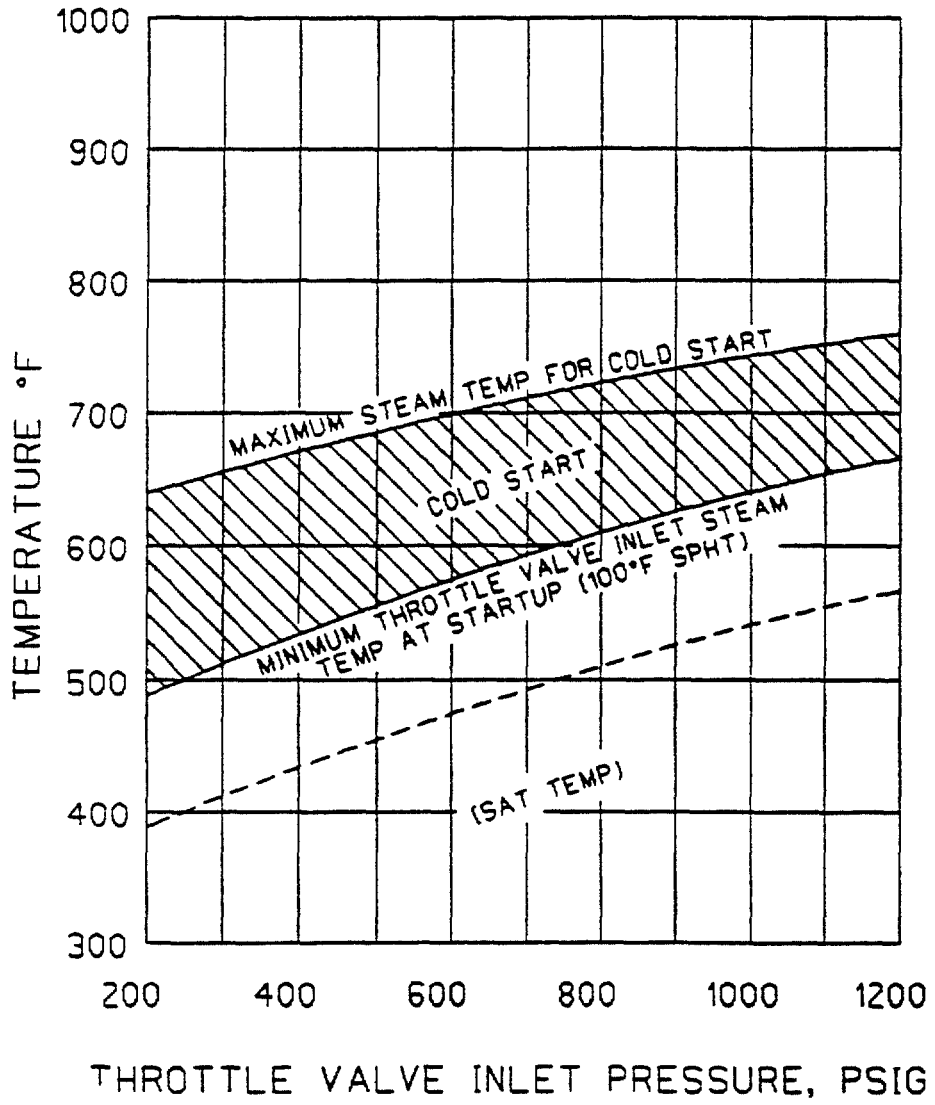

Figure 3-63 Typical Westinghouse Startup Throttle Steam Condition Chart

204

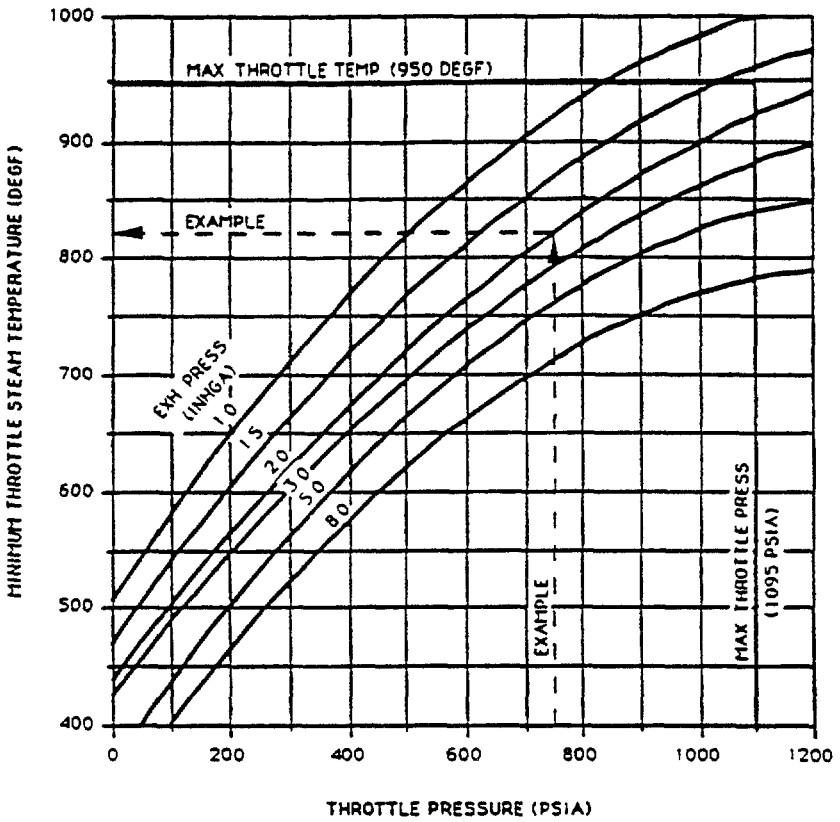

To use this chart, enter the horizontal axis with the current throttle pressure and extend a vertical line upward until it intersects the current exhaust pressure From that point extend a horizontal line to the left until it intersects the vertical axis Read the minimum throttle temperature Example for 775 psia throttle pressure and 2 0 inHgA back pressure the minimum throttle temperature is 825 degF

Figure 3-64 Typical Westinghouse Chart for Minimum Throttle Temperature

305

The chart is used by entering the graph with the throttle pressure on the horizontal axis and extending a vertical line up to the curve for the appropriate condenser pressure A horizontal line is then extended from the point of intersection to the left and the minimum allowable temperature is read from the scale on the left, vertical axis

Startup Recommendations for Rolling and Minimum Load

The next chart that one would use in planning and executing the startup of the turbine is the STARTUP RECOMMENDATIONS FOR ROLLING AND MINIMUM LOAD chart (**Figure 3-65**) which has five blocks or FIGURES The chart is designed for the user to start in the block marked FIGURE 1 and then move to the block marked FIGURE 2, then to the block marked FIGURE 3 and so on

The FIGURE 1 and FIGURE 2 blocks are used together to establish the temperature of the steam at the first stage of the turbine Recall from the discussion earlier in this module on nozzle theory, the expansion of steam through the first stage nozzle results in cooling of the steam The user enters the FIGURE 1 block from the horizontal axis with the throttle steam pressure and extends a vertical line to the appropriate throttle steam temperature curve A horizontal line is then drawn from the point of intersection to the right into the FIGURE 2 block A vertical line is drawn through the intersection of the horizontal line from the FIGURE 1 block and curve in the FIGURE 2 block That vertical line intersects the scale on the horizontal axis of the FIGURE 2 block to show the first stage steam temperature

The reader should note that in the FIGURE 1 block there is a shaded area beneath a curve marked "BELOW 100° SPHT " This means that if the steam conditions were to fall within this shaded area the amount of superheat in the steam would be less than 100° This would be a violation of the Westinghouse recommendation that there be a minimum of 100°F superheat in the throttle steam before rolling the turbine

The vertical line from the FIGURE 2 block is also extended upward into the FIGURE 3 block to determine the intersection of the vertical line with the appropriate line for turbine first stage metal temperature

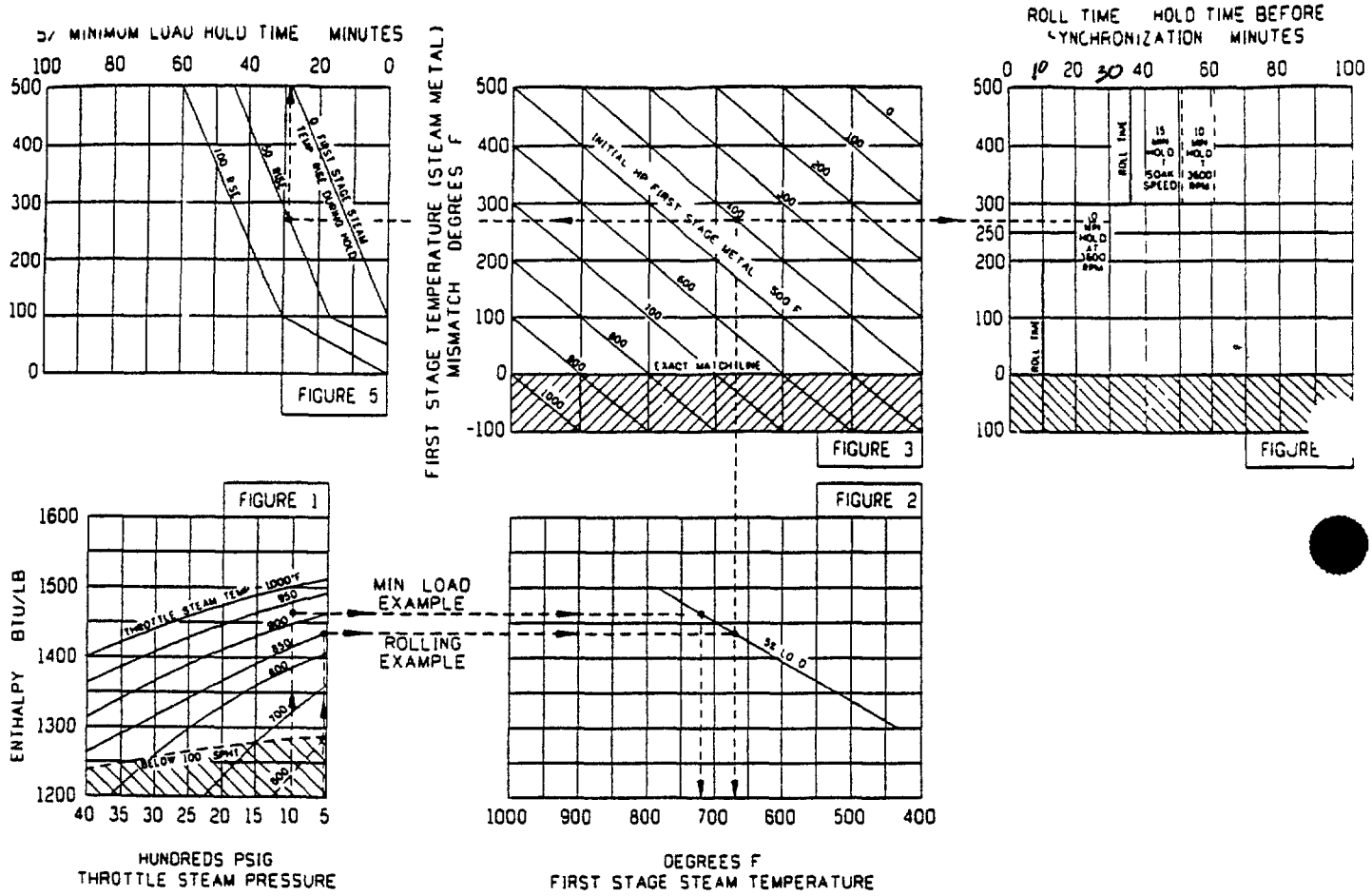

Figure 3-65 Typical Westinghouse Recommendations for Rolling and Minimum Load

30'

A horizontal line through this point of intersection extended to the scale on the vertical axis of the FIGURE 3 block shows the temperature mismatch between the first stage steam and the first stage metal A positive mismatch indicates that the steam is hotter than the metal while a negative mismatch (the crosshatched area) indicates that the steam is colder than the metal temperature The "EXACT MATCH LINE" at zero indicates that the steam and metal temperatures are the same

The horizontal line from the FIGURE 3 block is extended to the right into the FIGURE 4 block in order to determine the amount of time recommended for rolling the turbine to rated speed and synchronizing This time does not include speed holds for heat soak, speed hold times must be added to the rolling time to determine the total time to synchronization The "curve" in the FIGURE 4 block gives three different possible cases as follows

- Temperature mismatch ≥ 300°F - Total time to synchronization is about 36 minutes plus a 15 minute heat soak hold at the heat soak speed (from the chart TURBINE SPEED HOLD RECOMMENDATIONS 2290 to 2340 rpm) and plus a 10 minute hold at 3600 rpm The total time to synchronization is 61 minutes

- Temperature mismatch ≥ 200°F and <300°F - Total time to synchronization is 20 minutes plus a 10 minute hold at 3600 rpm The total time to synchronization is 30 minutes

- Temperature mismatch ≤200°F - Total time to synchronization is 10 minutes with no speed holds

Finally, the FIGURE 5 block is used to determine the duration of the minimum load heat soak hold at 5% of rated load following synchronization It is assumed in the use of this block that the throttle steam temperature may increase during the period of the load hold When this is the case, the duration of the minimum load hold must be increased

In the event that the throttle steam temperature is expected to increase, it is necessary to first determine how much that increase will be The FIGURE 1 and 2 blocks are used once again for this purpose in the same manner as described above The horizontal line from the FIGURE 3 block is then extended to the left to determine the intersection with the appropriate curve for the expected temperature rise

In the event that there is a negative temperature mismatch (steam colder than metal), the horizontal line from the FIGURE 3 block does not enter the FIGURE 5 block when extended to the left That is because when the steam is colder than the metal temperature there is no minimum load hold

ROLLING EXAMPLE - Assume that the initial first stage metal temperature is 400°F and that the throttle steam conditions are 600 psig and 850°F Assume that the throttle steam conditions will be 1000 psig and 925° at the end of the minimum load hold

From the FIGURE 1 block the point representing steam temperature is found and extended to the 5% LOAD in the FIGURE 2 block to find the first stage steam temperature of about 670°F A vertical line extended upward to the 400°F diagonal in the FIGURE 3 block gives a mismatch of 270°F When this mismatch is extended to the right into the FIGURE 4 block, a roll time of about 20 minutes plus a 10 minute hold at 3600 rpm is found

MINIMUM LOAD EXAMPLE - Using the FIGURE 1 and FIGURE 2 blocks the expected first stage steam temperature for the expected 1000 psig and 925° at the end of the minimum load hold is 720°F Since the initial first stage steam temperature is 670°F, the temperature rise is 50°F Extending the horizontal line from the FIGURE 3 block in the ROLLING EXAMPLE to the 50° RISE line in the FIGURE 5 block, a hold time of about 28 minutes is found for minimum load

Load Changing Recommendations

Westinghouse provides the chart in **Figure 3-66** to aid the operator in controlling temperature ramp rates during load changes The methodology used is similar to that used in the STARTUP RECOMMENDATIONS FOR ROLLING AND MINIMUM LOAD start chart

EXAMPLE 1 INCREASING LOAD

DETERMINE THE TIME REQUIRED AND LOAD CHANGING RATE TO INCREASE LOAD FROM 25% AT STEADY STATE THROTTLE STEAM CONDITIONS OF 700PSIG/775°F TO 100% LOAD AT RATED CONDITIONS OF 928PSIG/934°F. ASSUME A 10,000 CYCLE FATIGUE INDEX.

PROCEDURE

ENTER FIGURE 1 AT THROTTLE STEAM CONDITIONS EXISTING AT 25% AND 100% LOAD. PROJECT THESE STEAM CONDITIONS IN FIGURE 1 TO RESPECTIVE % LOAD LINES IN FIGURE 2 TO DETERMINE THE FIRST STAGE TEMPERATURE LEVEL AT EACH LOAD LEVEL. SUBTRACT THE FIRST STAGE TEMPERATURE AT 25% (575°F) FROM THIS TEMPERATURE AT 100% LOAD (885°F) TO DETERMINE THE CHANGE IN FIRST STAGE STEAM TEMPERATURE (310°F) OCCURRING DURING THE LOAD INCREASE. PROJECT THIS CHANGE INTO FIGURE 3 TO THE 10,000 CYCLES FATIGUE INDEX TO DETERMINE THE TIME TO MAKE THE LOAD CHANGE.

RESULTS

BY FOLLOWING THE PROCEDURE ABOVE, IT IS DETERMINED IN THE EXAMPLE THAT THE LOAD CAN BE INCREASED FROM 25% TO 100% AT A UNIFORM RATE OVER 50 MINUTES FOR A 10,000 CYCLES ROTOR FATIGUE INDEX. THE LOAD CHANGING RATE IS 75%/50 MIN = 1.5 %/MIN.

EXAMPLE 2 - DECREASING LOAD

DETERMINE THE TIME AND RATE TO REDUCE LOAD FROM 100% AT RATED THROTTLE CONDITION TO 5% LOAD AT RATED CONDITIONS OF 928PSIG/934°F PRIOR TO SHUTTING DOWN THE UNIT. ASSUME A 10,000 CYCLE FATIGUE INDEX.

PROCEDURE

ENTER FIGURE 1 AT THROTTLE STEAM CONDITIONS EXISTING AT 5% AND 100% LOAD. PROJECT THESE STEAM CONDITIONS IN FIGURE 1 TO RESPECTIVE % LOAD LINES IN FIGURE 2 TO DETERMINE THE FIRST STAGE TEMPERATURE LEVEL AT EACH LOAD LEVEL. SUBTRACT THE FIRST STAGE TEMPERATURE AT 5% (700°F) FROM THIS TEMPERATURE AT 100% LOAD (885°F) TO DETERMINE THE CHANGE IN FIRST STAGE STEAM TEMPERATURE OCCURRING DURING THE LOAD DECREASE (185°F). PROJECT THIS CHANGE INTO FIGURE 3 TO THE 10,000 CYCLES FATIGUE INDEX TO DETERMINE THE TIME TO MAKE THE LOAD CHANGE.

RESULTS

THE LOAD REDUCTION CAN BE MADE IN 40 MINUTES (2.2% PER MIN.) FOR A 10,000 CYCLE ROTOR FATIGUE INDEX. LOAD CHANGING RATE IS 95%/60 MIN = 1.58%/MIN.

NOTE

LOAD CHANGING RATES DETERMINED BY USE OF THESE CURVES ARE BASED ON THE TURBINE METAL TEMPERATURES HAVING REACHED A STEADY STATE CONDITION BEFORE THE LOAD IS CHANGED. MAXIMUM ALLOWABLE LOAD CHANGE RATE IS 5%/MIN WHEN METAL TEMPERATURES ARE NOT STABLE PRIOR TO THE CHANGE. FATIGUE INDEX VALUES ARE OF A LINEAR RAMP OF ROTOR SURFACES TEMPERATURE WITH EQUAL HEATING AND COOLING PHASE.

LOAD CHANGING RECOMMENDATIONS

928PSIG/934°F STEAM TURBINE DESIGN FOR 25% MINIMUM ARC ADMISSION CONTROL

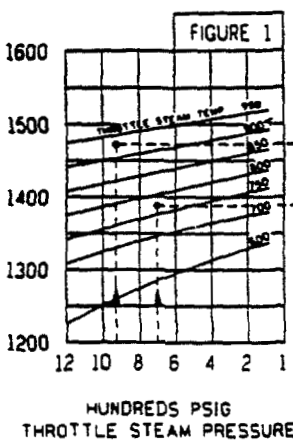

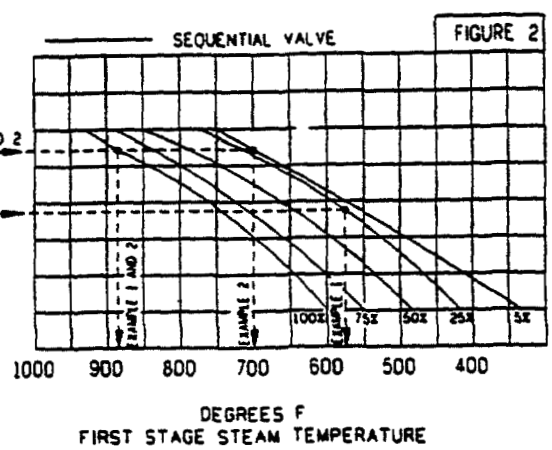

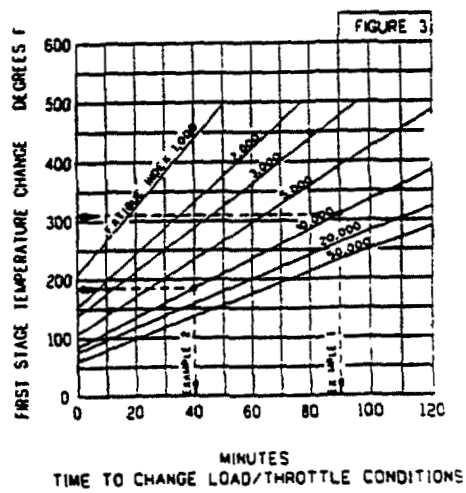

Figure 3-66 Typical Westinghouse Recommendations for Changing Load

310

The nomograph in the FIGURE 1 and FIGURE 2 blocks is used to determine what the first stage steam temperature will be at any load for any given throttle steam conditions This makes it possible to determine the change in temperature that the first stage will experience in the load change Once again, it must be remembered that the steam temperature at the first stage is different from that at the TVs because it is cooled as it passes through the main steam valves

The expected first stage temperature is determined from the FIGURE 1 and 2 blocks The FIGURE 1 block is entered knowing the throttle steam pressure and temperature A horizontal line is then extended from the FIGURE 1 block into the FIGURE 2 block to the appropriate load curve The temperature change at the first stage can be determined by using the chart twice for the initial and final load and steam conditions or, if one is operating and knows the first stage temperature, the chart need only be used once to predict the final first stage steam temperature since the "current" temperature is known

Once the first stage steam temperature is known, the temperature change is used in the FIGURE 3 block to determine the time over which the load change should be made The FIGURE 3 block uses the concept of fatigue index discussed earlier This allows the operator to choose the amount of cyclic life of the turbine to use in making load changes In practice, of course, this decision is generally established by management as an issue of policy The FIGURE 3 block is used by entering on the vertical axis with the first stage temperature change and then extending a horizontal line to the selected fatigue index curve A vertical line is then extended from the intersection of the horizontal line to the FATIGUE INDEX curve in the FIGURE 3 block to the horizontal axis to determine the time for the change

Load Increase Example - Assume that the unit starts at a load of 25% with throttle steam conditions at 700 psig and 775°F and increases to 100% load at 928 psig at 934°F Use the 10,000 cycle FATIGUE INDEX curve

From the FIGURE 1 and 2 blocks the first stage steam temperature for the starting condition is found to be about 575°F while at full load the first stage steam temperature is about 885°F By subtraction this results in a temperature change of 310°F

The FIGURE 3 block is then entered at 310°F on the vertical axis A horizontal line is extended from 310°F to the 10,000 cycle line and then a vertical line is extended downward The vertical line hits the horizontal axis at about 90 minutes and thus the time to make this load change should be controlled to that period By division a 75% load change over 90 minutes is a 1 5% per minute rate of change of load

Load Decrease Example - Assume that the unit is to be shut down It starts at a load of 100% with throttle steam conditions at 928 psig and 934°F and will be brought to 5% load at 928 psig at 934°F. Use the 10,000 cycle fatigue index curve

From the load increase example the first stage steam temperature is known to be about 885°F From the FIGURE 1 and 2 blocks the first stage steam temperature for 5% load is about 700°F By subtraction this results in a temperature change of 185°F

The FIGURE 3 block is then entered at 185°F on the vertical axis A horizontal line is extended from 185°F to the 10,000 cycle line and then a vertical line is extended downward The vertical line hits the horizontal axis at about 40 minutes and thus the time to make this load change should be controlled to that period By division a 95% load change over 40 minutes is a 2 3% per minute rate of change of load

Cyclic Index for Loading and Unloading at Different Rates

Westinghouse determines the fatigue index of the turbine rotors by examining the full cycle that the turbine experiences in loading and then unloading It is generally assumed that the same fatigue index will be used for both loading and unloading This may not be the case however Westinghouse has, therefore, provided the nomograph in **Figure 3-67** to determine what is called the "Equivalent Full Cycle Index" when the loading and unloading fatigue indices are different The chart is used by entering the vertical axis with loading rate fatigue index used and extending a horizontal line to the curve for the unloading fatigue index used

316

Westinghouse Proprietary

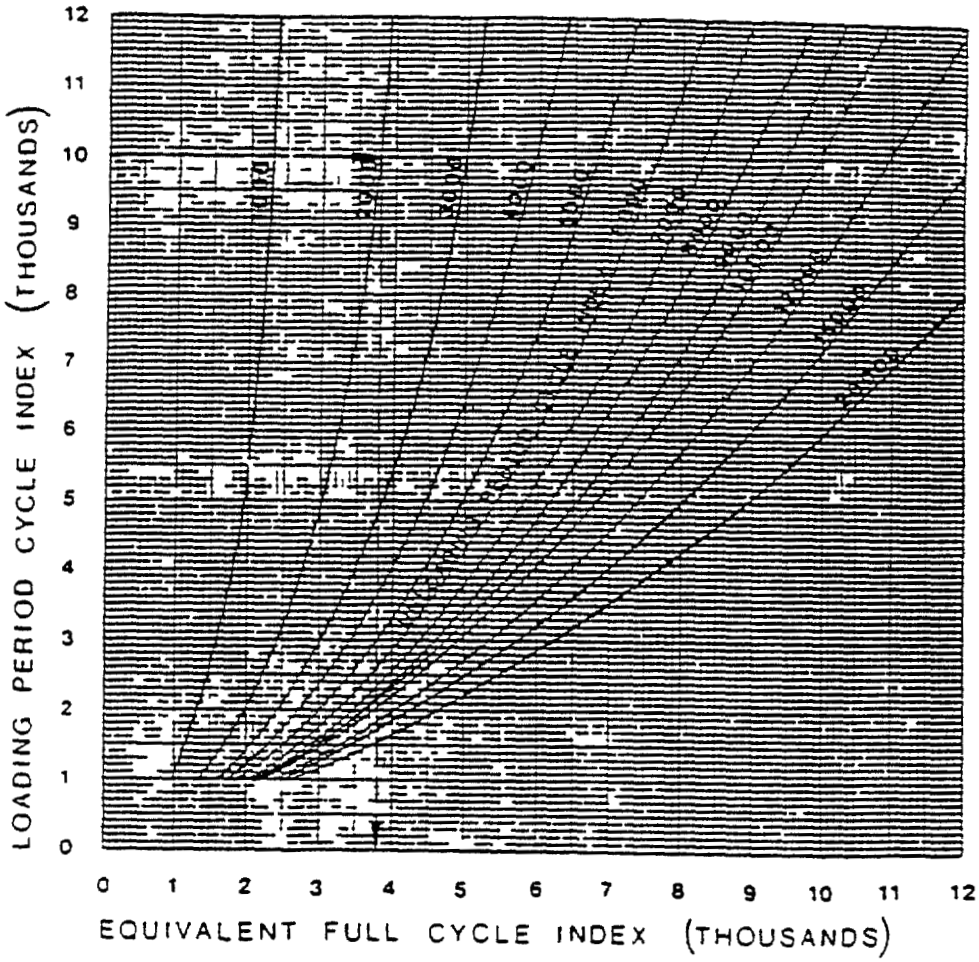

CYCLIC INDEX FOR LOADING AND
UNLOADING AT DIFFERENT RATES
CT23819

Figure 3-67 Typical Westinghouse Chart for Determination of Cyclic Index

313

A vertical line is then extended from the point of intersection to the horizontal axis to determine the equivalent full cycle index If, for example, the loading fatigue index were 10,000 cycles and the unloading fatigue index were 2,000 cycles, the equivalent full cycle index would be about 3,800 cycles

Cooling Curve

The cooling curve in **Figure 3-68** is provided by Westinghouse to predict the temperatures in the turbine following a shutdown This curve can be useful in planning for a startup For instance, if there is a three day outage, one can determine from the turbine metal temperatures at the beginning of the outage what the likely turbine shell temperatures will be at startup It could then be determined how long the restart would take

3 8 5 Westinghouse General Operating Recommendations

Westinghouse has a number of operating recommendations which apply to all of their turbines The following is a summary of those general recommendations

Rotor Eccentricity

When on turning gear the eccentricity of the rotor at any bearing oil ring, as measured with a "truth" dial indicator should not exceed 0 001 inch The TSI rotor eccentricity should not exceed 0 003 inch from turning gear to 600 rpm Westinghouse recommends that the turbine be placed on turning gear operation for 3 to 4 hours following long periods off turning gear to assure that eccentricity returns to normal before rolling the turbine

Vibration Limits

For 3600 rpm units, Westinghouse recommends the following vibration limits

3 0 mils	Satisfactory
5 0 mils	Alarm
10 0 mils	Trip

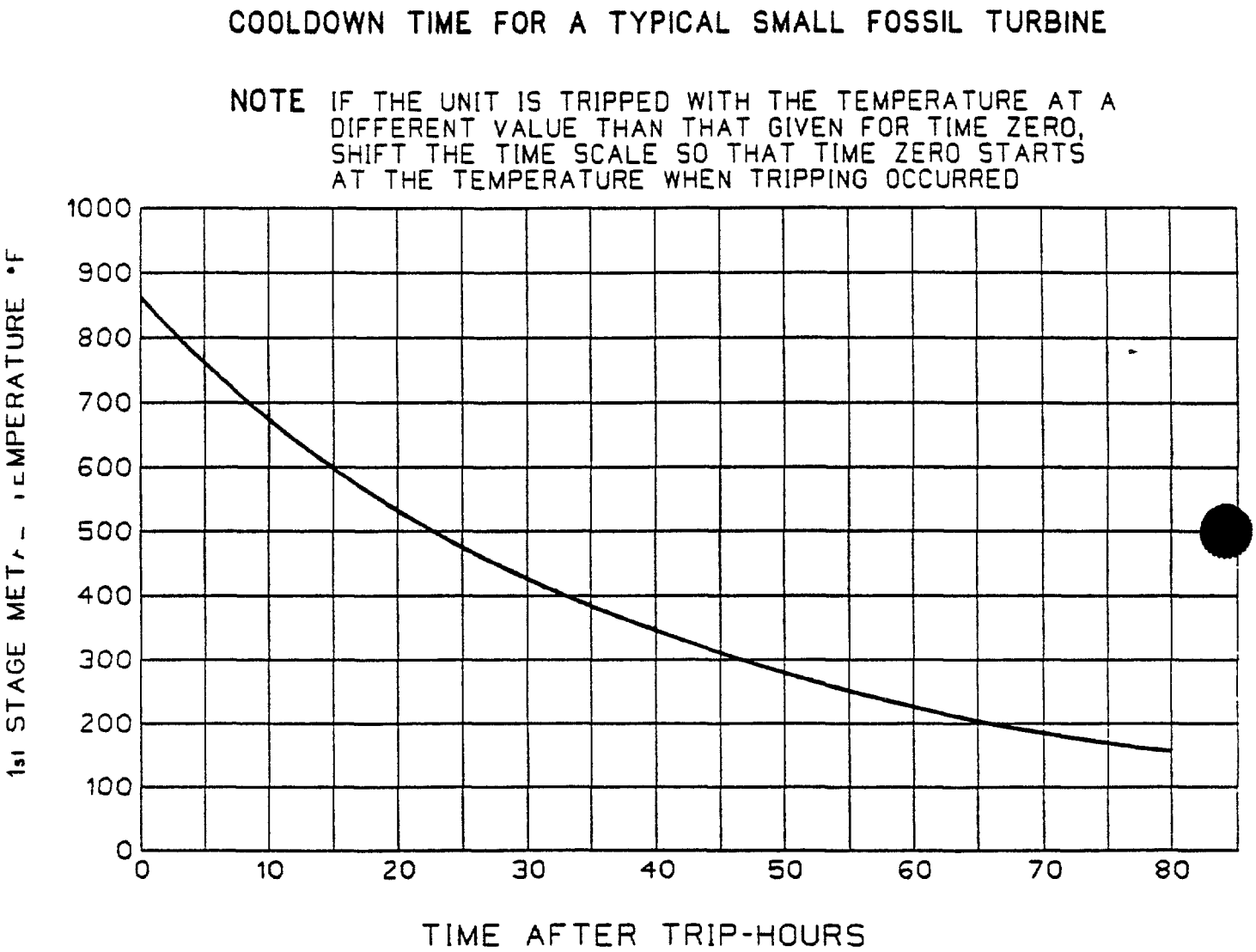

Figure 3-68 Typical Westinghouse Cooling Curve

315

Bearing Temperatures

For 3600 rpm units, Westinghouse recommends establishing the following limits with regard to bearing metal temperatures

Bearing Type	Alarm	Trip
Journal	225°F	235°F
Thrust	210°F	225°F

Oil Temperatures

The minimum temperature for operation of the lube oil pumps is 50°F The minimum temperature for turning gear operation is 70°F The maximum temperature for oil drains from bearings is 160°F with an alarm at 170°F

Turning Gear Operation Following Shutdown

Westinghouse recommends that the unit remain on turning gear until the turbine rotor has cooled to 300 to 400°F Cooling to this point may take up to 3 days depending upon the manner in which the unit was shut down The lube oil header temperature during this time should be 100°F - 110°F

Differential Expansion

An increase in steam temperatures can be expected to produce a rotor long condition and conversely a decrease in steam temperature will produce a rotor short condition In the event that there is a rotor long condition, Westinghouse recommends that the increase/decrease in steam temperature should be held to allow the turbine shell to "catch up" with the rotor

3 8 6 Operational Limitations

There are two types of operational limits, tripping limitations and non-tripping limitations If safe limits of operation are exceeded for tripping limitations, the turbine is automatically tripped There are no trips associated with non-tripping limitations

Tripping Operational Limits

- Overspeed - The nominal emergency overspeed governor trip setpoint is usually around 3960 rpm (110% of rated speed)

- Low Vacuum - Most units have fixed alarm and trip setpoints, usually around 5 inch HG abs alarm and 7 5 inch HG abs trip The low vacuum trip setpoint for some units varies depending on the status of the unit as shown in **Figure 3-69** The vacuum trip has a timed trip feature that allows operation between the alarm point and the trip point

- Thrust Bearing Wear - The thrust wear trip device is usually set to alarm at about 0 035 inch and trip at about 0 040 inch rotor movement

- Low Bearing Header - The low bearing oil pressure trip is set at about 10 psig less than normal operating pressure

- Low EHC Hydraulic Pressure - The turbine is tripped on low EHC hydraulic pressure with a setpoint that is around 1100 psig for a 1600 psig system

- External Trips - The turbine is usually tripped through a trip solenoid by an 86 relay which cross trips the turbine in the event of a boiler trip and some other plant conditions

Nontripping Operational Limits

As with the other units there are a number of operational parameters for which there are no trips The operator must regulate these parameters within the limits provided

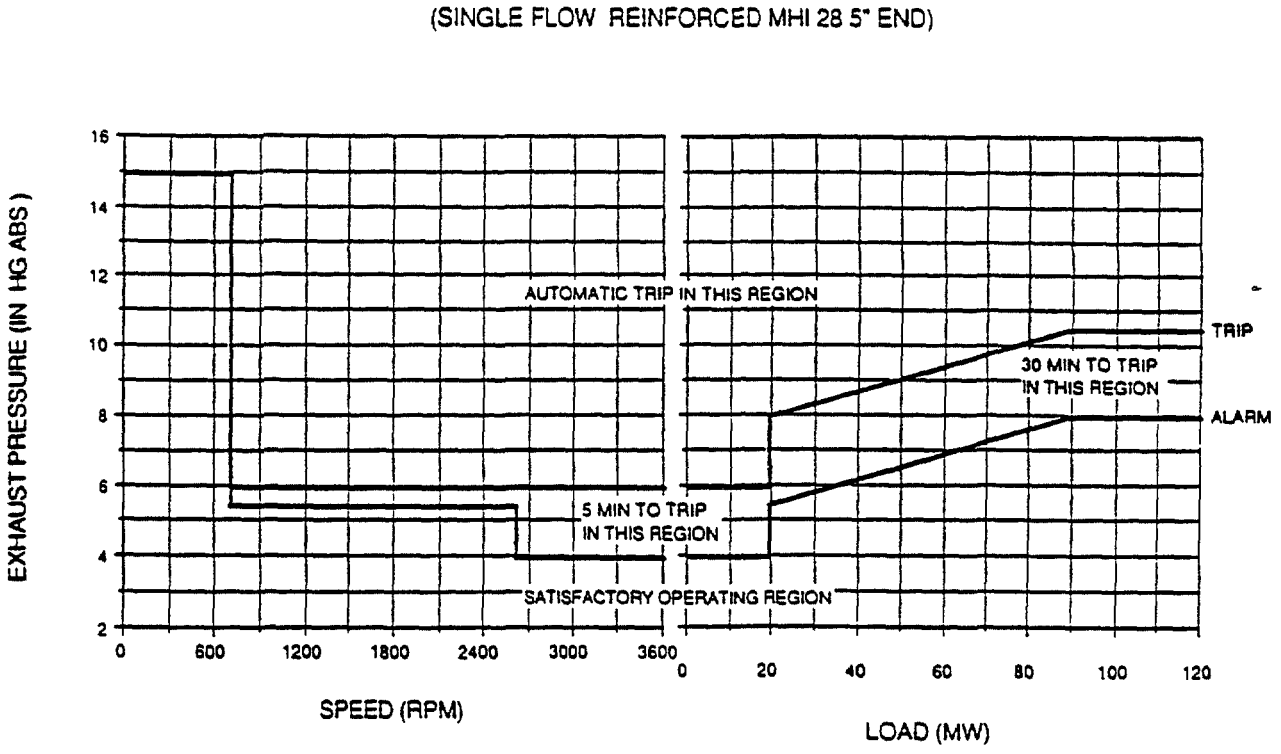

Figure 3-69 Typical Westinghouse Vacuum Trip Recommendations

318

- Steam Pressure and Temperature Limitations - The main steam pressure should not exceed 105% of the rated pressure continuously Pressures up to 106% are permissible for brief periods Maximum allowable pressure swings are up to 130% of rated pressure, and the total time spent above rated pressure should not exceed 12 hours per year (0 14% of the year, one hour per month)

  The throttle steam temperature must not average more than the rated values of 940°F Temperature swings of up to °15 F are allowable in maintaining this average The following additional limits apply

  - Temperatures over 25°F, less than 400 hours per year
  - Temperatures over 50°F, never longer than f or 15 minutes and not more than 80 hours per year
  - Westinghouse recommends that the unit should be tripped if, as a result of loss of fires in the boiler, the throttle pressure falls below 80% of rated or the throttle and reheat temperatures fall more than 150°F
  - Westinghouse recommends that the maximum rate of change of main steam temperature be limited to 300°F per hour
  - Throttle steam flow and exhaust steam flow are typically limited to avoid overload of turbine internals

- Casing Flange and Bolt Temperature difference - Westinghouse recommends that the difference in temperature between the turbine casing flange and adjacent bolt be limited to 198°F with the flange hotter or 50°F with the flange colder

- Induction Steam Condition Limits - For turbines with an LP steam inlet, a maximum induction steam inlet pressure limit is provided During startup the maximum difference between the induction steam temperature and the turbine steam temperature at the induction port is usually limited to 75°F The allowable mis-match increases to 150°F in normal operation

319

- Minimum Load - The recommended minimum load is 5%

- Exhaust Temperatures - The maximum allowable temperature for continuous operation is 175°F, and for brief periods is 250 F Note that modulating exhaust hood sprays are usually set to open at 150 - 170°F The maximum allowable temperature for brief periods (less than a few minutes) is 250°F

- Sealing Steam - The minimum superheat temperature of steam supplied to any seal is 25°F The LP gland temperature must be maintained between 250°F and 350°F

- Breaking Vacuum - Vacuum should not be broken until turbine speed has fallen to 400 rpm

- Critical Speeds - Westinghouse provides a figure similar to **Figure 3-70** which illustrates speeds that should be avoided during startup

- Under-Frequency Operation - The following limitations are provided for guidance on the limitations for off-frequency operation These recommendations are designed to protect the long LP turbine blade from damage due to vibration

  - 57 Hz to 61 5 Hz indefinitely
  - 56 9 Hz to 57 Hz for up to 60 minutes
  - 56 7 Hz to 56 9 Hz and 61 5 Hz to 61 7 Hz for up to 10 minutes

These limits are cumulative over the life of the unit for instance, if one incident of under frequency operation for a unit were to be 3 minutes at 57 Hz (limitation of 60 minutes) then 5% of the life of the unit in this speed range is "used up "

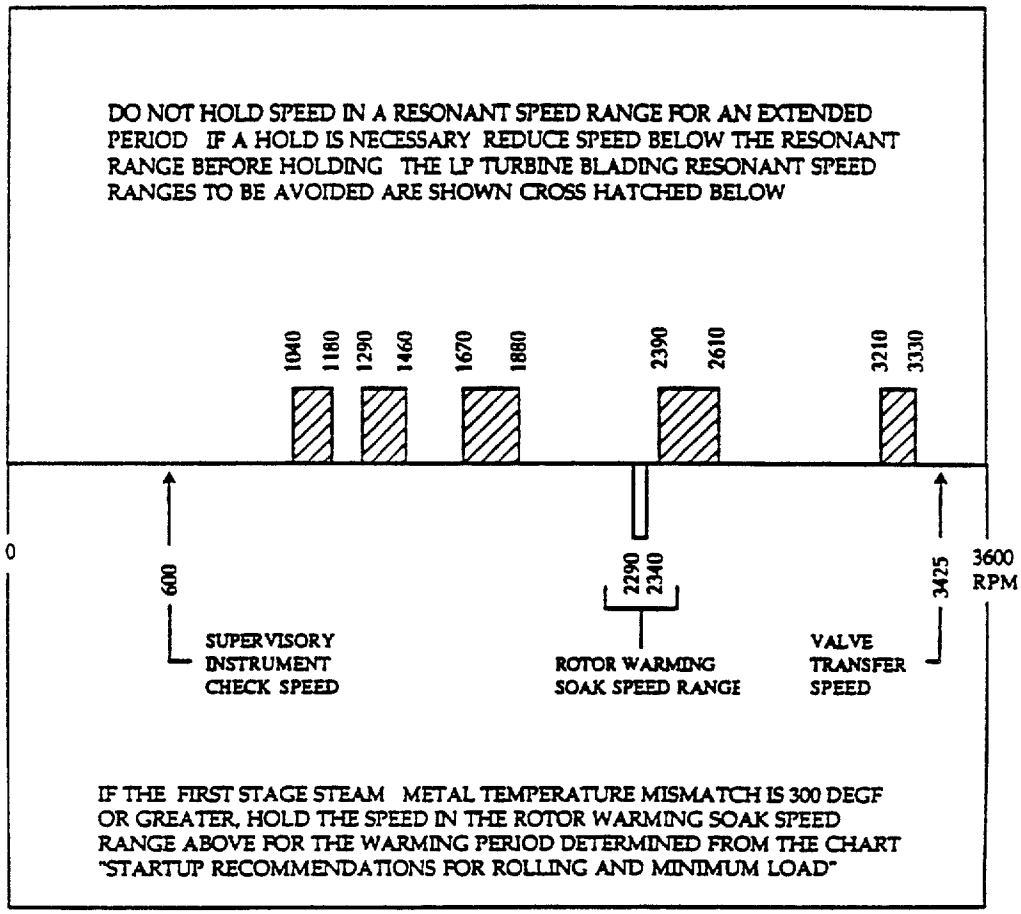

(MHI 28.5" END)

Figure 3-70 Typical Westinghouse Critical Speed Chart

321

3 8 7 Water Induction Recommendations

Water induction is the introduction of water into the turbine There are several ways that water induction can occur Operators must be aware of these causes to be able to react to and minimize water induction Immediate action is required upon the detection of water induction to prevent damage Some causes of water induction are

- Clogged or inadequate drains
- Carryover from the boiler (HP and LP)
- Gland seal system problems
- Desuperheating spray problems
- Backup of water from feedwater heaters

Water Induction Thermocouples

Conventional monitoring systems use thermocouples to detect water induction The thermocouples are located in the turbine and main and reheat steam lines Unfortunately, these detectors do not detect water until after it has entered the turbine However, corrective actions can often be taken before extensive damage occurs For most units, the thermocouples are located in pairs, one in the upper casing (or cover) and the other in the lower casing (or base), at the first stage and the induction port

Normally both top and bottom thermocouples at an opening in the turbine would read approximately the same temperature Westinghouse's criteria for indication of water induction is when a temperature differential of 75°F or more suddenly (within a few minutes) develops between the upper and lower thermocouples, water induction has probably taken place They provide further guidance in that if the temperature difference increases to 100°F the turbine must be tripped

Water Induction Prevention and Response

The best way to prevent water induction is to be aware of the most common causes of water induction and to use caution to avoid creating problem situations Common causes of water induction are described below

Clogged Drains - Drains are located in many places throughout the turbine (e g , valve seats, steam lines, turbine shells, and steam seal piping) The purpose of these drains is to remove any water that may collect If debris were to clog these drains, water could accumulate and be carried into the turbine These drains should be opened prior to startup and immediately after the unit is tripped Occasionally these drains should be blown down to ensure they are not clogged If clogged, they should be repaired as soon as possible

Water Carryover from the HRSG - If the water level in the HRSG drum is allowed to rise too high, water can be carried from the HRSG into the turbine This type of water induction is typically accompanied by a sudden drop in HRSG pressure resulting from a decrease in HRSG heat input (perhaps due to a gas turbine trip) or a sudden, large demand for steam flow The throttle pressure regulator of the turbine control system will close the turbine valves in response to this sudden drop in steam pressure if it is in service However, operators must regulate the water level in the HRSG so that it does not cause water induction

The induction steam inlet has two specific areas of concern The ISV and ICV do not open until the unit reaches 20% load It is possible, therefore, for water to accumulate behind these valves and cause water induction at a point in the unit startup for a conventional turbine where all drains would be closed

Another possible problem could occur after the induction steam valves open There could be a problem in the ICV such that the pressure were allowed to fall below the saturation pressure for the temperature of the steam, wet steam can be introduced at the induction port The amount of moisture depends upon

how far the induction steam pressure falls If water carryover is suspected, another indication is a sudden drop in steam lead temperatures often accompanied by rumbling in the steam leads

HP Desuperheating Spray - The HP steam system is equipped with a desuperheating spray The block valve for this spray should be closed when the unit is not in operation It is possible for water leaking from the spray to flow back into the turbine after vacuum is broken

Response to Water Induction

Operator response to water induction must be evaluated for each occurrence on each unit It is not possible to give a set of "rules" that specifies exactly what action should be taken in every instance The guidelines listed below do, however, cover most of the likely occurrences and the operator should be familiar with them

1 Take immediate action if water induction is suspected
2 Investigate the source
   a If running below rated speed trip the turbine
   b If running at rated speed continue to operate unless forced to shut down, due to vibration, differential expansion, etc
3 Isolate the source of water induction
4 If the unit is tripped, do not attempt a restart unless
   a The source of water is isolated and cause has been corrected
   b The water has been drained
   c Shell temperature differential is less than 50°F
   d Eccentricity is normal

Westinghouse has an additional criteria for the continued operation of the turbine following a water induction incident, the temperature difference between the horizontal joint and bottom centerline thermocouples must be less than 100°F or else the unit should be tripped

A serious water induction incident can result in so much distortion of the turbine casing and rotor that the rotor will bind and the turning gear will be unable to turn the rotor If this occurs, the turbine should be allowed to cool and the turning

gear should be tried periodically (about once an hour) No other means (such as turning with a crane) should be attempted because of the possibility of internal damage to the turbine

3 9 Turbine Controls

The function of the turbine controls is the positioning of the turbine main steam valves The system is rather complicated as it must correctly position a large number of valves (2 to 4 MSVs/TVs, 4 to 8 CVs/GVs, 2 to 4 RSVs, and 2 to 4 IVs, LPSVs and LPCVs) for any of several normal and abnormal conditions This requirement results in a very complex system Regardless of how great that complication becomes, however, the function of the turbine controls is still the correct positioning of the turbine main steam valves

Another source of complication of the turbine control system is the fact that for most normal operation, the system is operated in one mode, the control of load or initial pressure by positioning of the turbine governor valves All of the other main steam valves are fully opened in normal operation, except during startup, during low load operation, or during emergency conditions The most important emergency condition for which the turbine controls are designed is overspeed The turbine speed increases above rated speed any time there is a load rejection Destructive overspeed can occur if the turbine valves are not closed within a fraction of a second of a load rejection Danger to life and property in the event of a destructive overspeed is serious and extensive

The turbine controls are also designed to make it possible for the unit to operate in an electrical distribution system with other units If the turbine controls are not designed and operated in a manner that is consistent with the needs of system operation, the reliability of the entire electrical distribution system can be adversely affected

All turbine control systems, regardless of manufacturer or turbine, share some common features A reheat turbine such as that shown in **Figure 3-71**, must have the control system elements shown in **Figure 3-72**

325

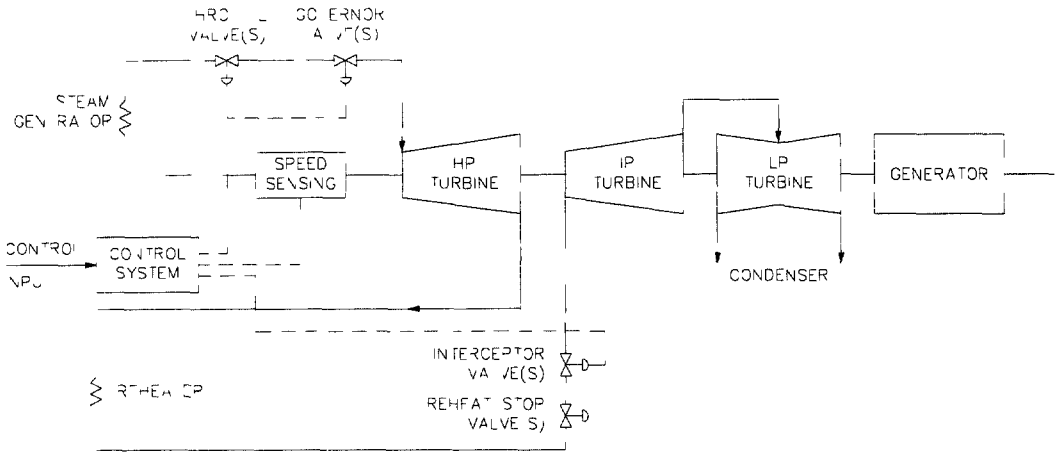

Figure 3-71 Basic Reheat Turbine Control System

326

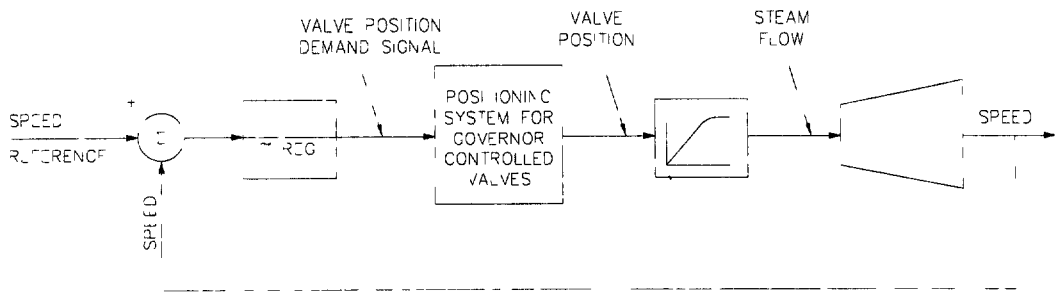

Figure 3-72 Basic Turbine Control Loop Diagram

The steam flow through the turbine is as follows

- From the steam generator (boiler) to the MSVs/TVs
- From the throttle to the CVs/GVs
- From the CVs/GVs to the HP turbine inlet
- From the HP turbine exhaust to the steam generator reheater
- From the reheater to the RSVs
- From the reheat stop valves to the IVs
- From the IVs to the IP turbine inlet
- From the IP turbine exhaust to the LP turbine inlet
- From the LP turbine exhaust to the condenser

In the most simple and the most complex turbine control systems, the speed of the turbine must be sensed so that it can be used to help position the turbine valves The control system must, at a minimum, have the basic elements shown in **Figure 3-72** This basic control diagram shows a simple control loop with just one input, a speed/load demand signal which is the speed (or load) setpoint entered by the operator That input signal goes to a controls device called a summer (a summer adds two or more signals together) that subtracts (adds the inverse of) the actual speed signal from the speed sensing device The signal from the summer represents the difference between the actual speed and the speed setpoint, this signal is sometimes referred to as the speed error signal

The speed error signal is multiplied by the inverse of a parameter called regulation Typically the magnitude of this multiplier is about 20 The amplified speed error signal, sometimes referred to as the valve position demand signal, is then sent to a positioning system (typically hydraulic servomotors) that are used to position the main steam valves

The main steam valves are positioned in response to the valve position demand signal The flow of steam to the turbine is varied in response to that opening The more steam that flows to the turbine, the more energy that is available to the turbine

As the steam flow increases, the turbine may respond in one of two ways, depending upon its mode of operation If the generator connected to the turbine is not synchronized to the electrical system, the turbine-generator speed increases If the generator is synchronized, the speed of the turbine-generator is fixed by the electrical distribution system frequency, and the load of the generator increases

The basic elements of the control system that are illustrated in **Figure 3-72** may differ considerably from one turbine to another The speed sensing device, for instance, (one of the most important elements of the system), may be

- A mechanical flyball governor which generates a speed signal in the form of the displacement of a pivot rod
- A device similar to a centrifugal pump which generates a speed signal in the form of an oil pressure
- An electronic device that generates a speed signal in the form of a DC voltage

In the turbine industry, control systems for turbines are classified in many ways The highest level classification is whether or not the control system uses electronic components or mechanical hydraulic components Those which use mechanical and hydraulic components are called mechanical hydraulic control systems (MHC) and those using electronic and hydraulic components are called electrohydraulic systems (EHC) EHC control systems may be further subdivided into analog and digital systems The flyball governor and pump are used as speed measuring devices in MHC systems and the electronic device is used in EHC systems

An important aspect of turbine control systems is that regardless of the nature of the control systems, MHC or EHC, analog or digital, all must share certain characteristics These common characteristics are most easily illustrated using examples of simplified MHC systems as shown in the following Section

3 9 1 Simple MHC Turbine Control Systems

It might be said that the most important device in a control system for a turbine is the speed sensing device The speed sensing device is a transducer that converts the parameter of speed to another parameter The GE Lynn flyball governor has been

used for most GE MHC turbines for over 30 years Westinghouse MHC systems make use of a device called an impeller as the speed transducer To illustrate the principles involved most of this section will use the flyball governor The governor oil impeller is also examined briefly

A Simple Flyball Governor

Figure 3-73 shows a very simple turbine with a single governor valve and a flyball governor In this system, the flyball governor is the speed transducer corresponding to the governor oil impeller The turbine would, of course, also have a throttle valve upstream of the governor valve Assume that the throttle valve is open for the purposes of this discussion Assume also that the turbine-generator has not been synchronized to the system This is important because once the generator is synchronized, the speed of the turbine is fixed by the electrical frequency of the system, if the electrical frequency of the system is 60 Hz, the turbine speed is exactly 3600 rpm for most turbines (some turbines produce 60 Hz power at 1800 rpm) The speed of the turbine is sensed by the flyball governor The fulcrum for the lever connecting the governor to the governor valve is fixed The governor is driven by a worm gear at the end of the turbine shaft

If the turbine speeds up, the weights of the governor move outward due to increased centrifugal force This outward movement lifts the pivot rod up which, in turn, closes the governor valve slightly as shown in **Figure 3-73 (b)** As the valve closes, the flow of steam to the turbine is reduced, slowing down the turbine This causes the weights on the governor to move inward again, restoring the governor valve close to its previous position, and the turbine close to its original speed The opposite occurs if the turbine slows down The reason that the system does not restore the turbine to its exact, previous speed is an important issue that is explained later in this discussion

The setpoint for the simple governor system shown in **Figure 3-73(a)** is fixed by the position of the lever fulcrum If it is necessary to change the turbine speed setpoint, an adjusting screw must be used in place of the fixed fulcrum as shown in **Figure 3-74(a)** This adjusting screw is called the speed load changer

320

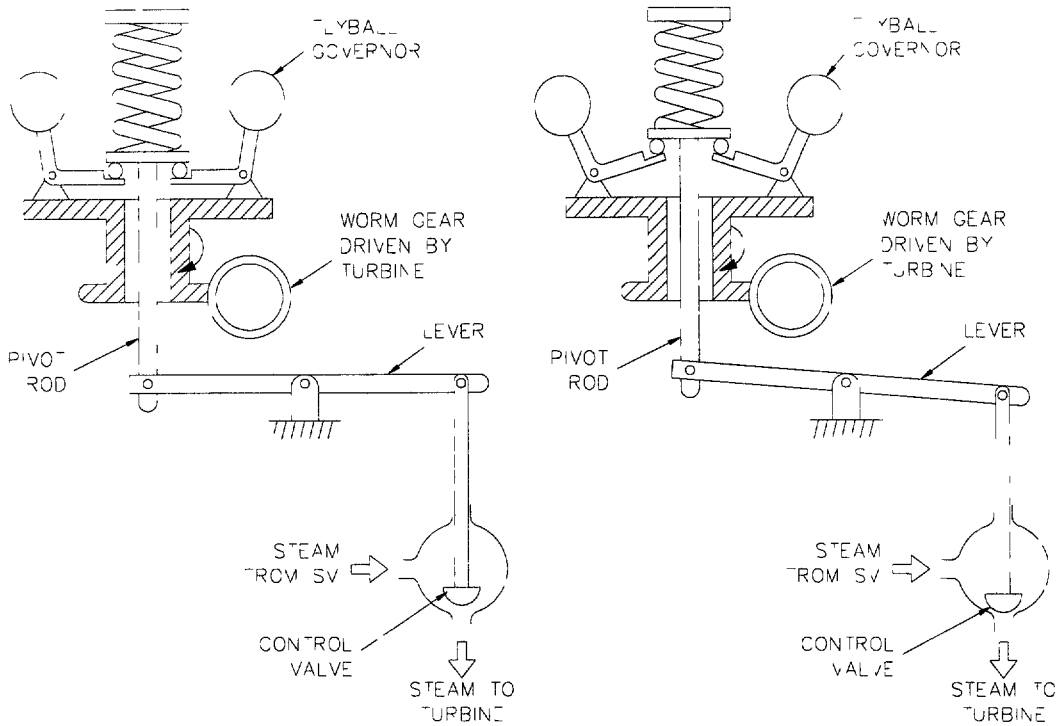

Figure 3-73 Simple Turbine Flyball Governor

331

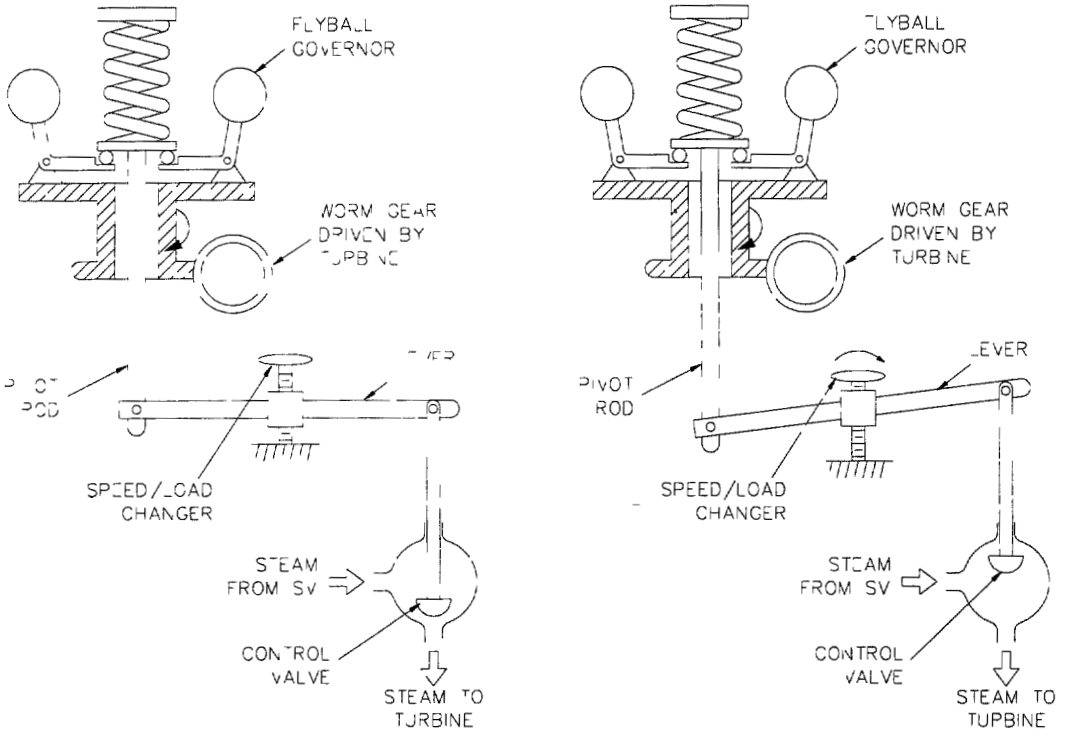

Figure 3-74 Simple Turbine Flyball Governor with Addition of Speed Load Changer

To speed the turbine up, the speed load changer is adjusted upward, opening the governor valve and speeding up the turbine The governor weights then move outward to a new position of equilibrium The opposite is done to slow the turbine The speed load changer has mechanical stops called the high speed stop and the low speed stop to limit its travel to the operating range of the governor

Now assume that the generator is synchronized to the electrical system This essentially fixes the speed of the turbine-generator The position of the governor valve at full speed, no load (FSNL) is just cracked opened since only about 2% of rated flow is necessary to keep the turbine-generator at FSNL Under these circumstances, the position of the pivot rod from the fly ball governor is fixed If it is necessary to open the turbine valve in order to increase the steam flow and thus load, the speed load changer is adjusted upward

Next, assume yet another situation in which the turbine-generator is carrying electrical load, but it is the only generator in the system The turbine valve is positioned to maintain 50% load as shown in **Figure 3-74(a)** Assume now that the load increases to 75%, but the governor valve position remains fixed at first The increased load causes the turbine-generator to slow When this happens, the flyball governor weights move inward, pushing the pivot rod down and opening the governor valve further This increases the steam flow to "pick up" the increased load

When the turbine-generator reaches a new point of equilibrium, the load will have increased to 75% and the speed of the turbine-generator will have slowed To return the turbine-generator to the speed it had before the load increase, it is necessary to adjust the speed load changer upward to open the governor valve more as shown in **Figure 3-74(b)**

droop = regulation

The amount that the turbine-generator slows depends on the position of the speed load changer that acts as the fulcrum in the lever system The closer the speed load changer is to the governor, the less the change in speed The term regulation (also sometimes called speed droop) is used to describe this phenomenon Regulation may be defined as the change in speed required to move the valves from full open to fully closed Thus, if a turbine with a regulation of 5% were running with

valves wide open, and the system frequency were to increase 5% from 60 Hz to 63 Hz (forcing the turbine speed to increase from 3600 to 3780 rpm), the governor would drive the valves completely closed The graph in **Figure 3-75** illustrates the concept of regulation

Turbines with a narrow (small) regulation require only a small change in speed in order to produce a significant change in valve position while the opposite is true of turbines with a wide (large) regulation Regulation has important implications when more than one turbine-generator is operated in an electrical system This is because in such a system there must be a means to share changes in system load among the units in the system If every unit in the system has the same regulation, then when there is a load change, all units pick up (or loose) load in proportion to their size

There is another important implication of regulation In the event of a turbine overspeed, perhaps due to loss of load, as soon as the speed increases above the setpoint, the governor valves will start to close Most overspeed incidents, including those from loss of load, result in overspeed of more than 5% This means that the governor valves will close completely and thus help in limiting the magnitude of the overspeed

The discussion so far has assumed that the output of the flyball governor would be connected directly to the governor valve This is not practical for two reasons First the force produced by the flyball governor is very small--too small to move even one small governor valve Second, the distance that the governor moves is very small--too small to accommodate the stroke of the governor valves Another related problem is the accuracy of the governor in converting the turbine speed If the governor has to do work by opening and closing a governor valve, then its accuracy is reduced

The Westinghouse turbine control systems use the governor oil impeller as the speed transducer rather than the flyball governor The governor impeller is somewhat similar to a centrifugal pump and like centrifugal pumps, changes its discharge pressure as speed changes

334

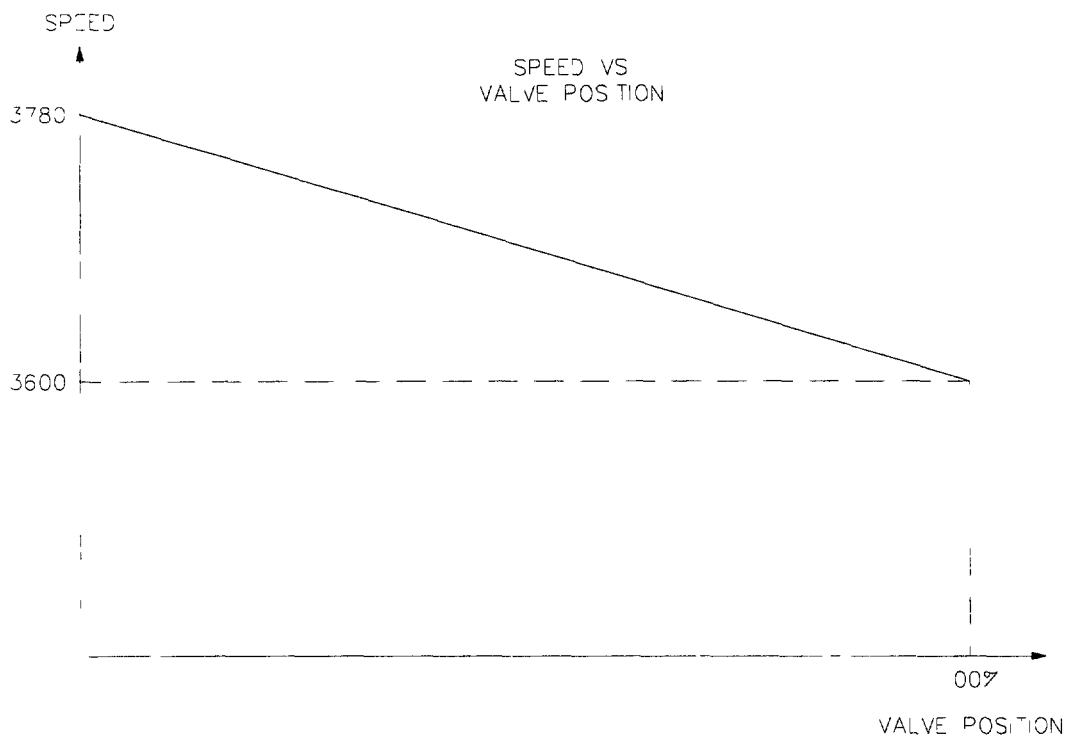

Figure 3-75 Speed vs Valve Position for 5% Regulation

33.

The governor impeller discharge pressure is, therefore, a pressure signal which can be amplified by other devices to position the main steam valves **Figure 3-76** shows a simplified system which uses a governor oil impeller to position the governor valve The governor impeller is a centrifugal pump mounted on the end of the turbine shaft The discharge from this pump provides hydraulic pressure to a spring open, single acting, hydraulic servomotor As the hydraulic pressure from the governor impeller increases, the piston in the servomotor is pushed upward against the spring The governor valve is closed as the piston moves up Conversely as the hydraulic pressure falls, the piston moves downward, opening the governor valve

The governor impeller, illustrated in **Figure 3-77**, takes the place of the flyball governor that was illustrated in the earlier simplified systems To understand how this device can act as a speed transducer, consider **Figure 3-78** The impeller consists of a hollow cylindrical body with radial tubes connecting the chamber inside the impeller to the outside diameter of the impeller where they discharge into the governor impeller discharge cavity The impeller inner chamber also has oil drain passages The discharge cavity is an annular chamber which surrounds the governor impeller

High pressure oil from the main oil pump discharge (note that the main oil pump is located adjacent to the governor impeller on the same shaft) is admitted to the discharge cavity through an adjustable orifice which is set to provide a constant flow The oil flows into the cavity, radially inward through the tubes to the impeller inner chamber, and out of the impeller inner chamber through the drain holes

The arrangement of the governor impeller produces, in effect, a column of oil which extends from the inside ends of the radial tubes to the outside diameter of the governor impeller discharge cavity The flow of oil into the discharge cavity is adjusted to assure that the tubes are full of oil at all times without exceeding the drain capacity of the governor impeller chamber drains This condition assures that pressure on the column of oil is determined by the centrifugal force on the oil alone and is independent of the pressure upstream of the adjustable orifice that admits oil into the cavity Since centrifugal force varies with the square of the rotational speed of the impeller, the governor impeller discharge pressure varies directly with the square of the turbine speed

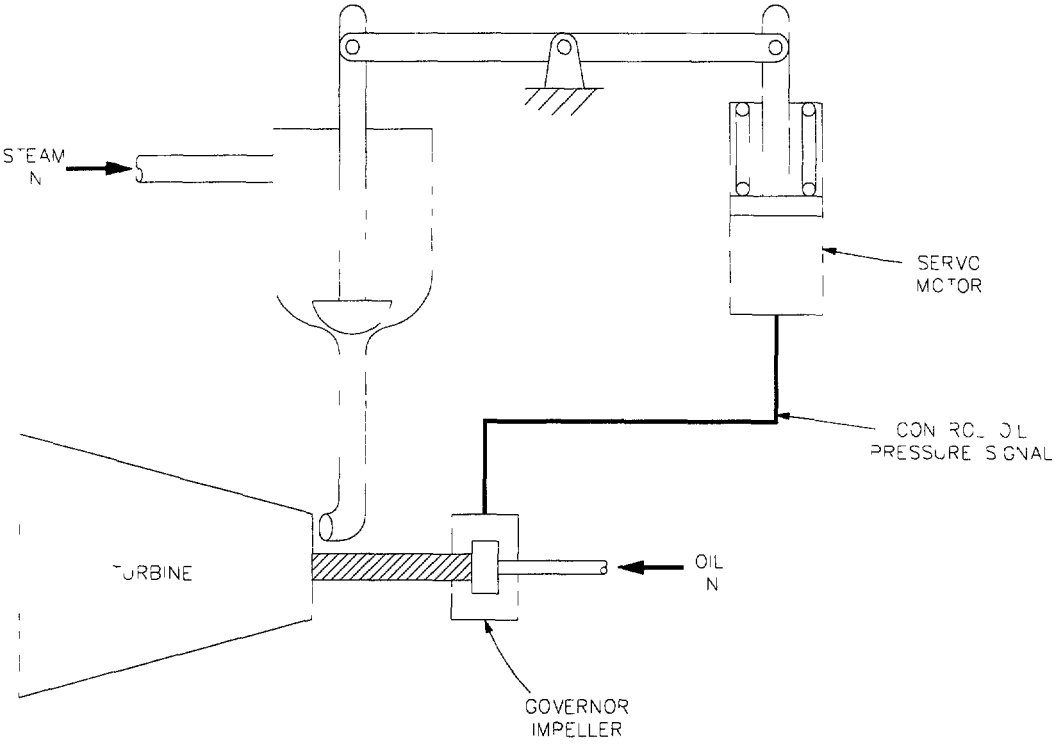

Figure 3-76 Simplified Governor Impeller Control System

35

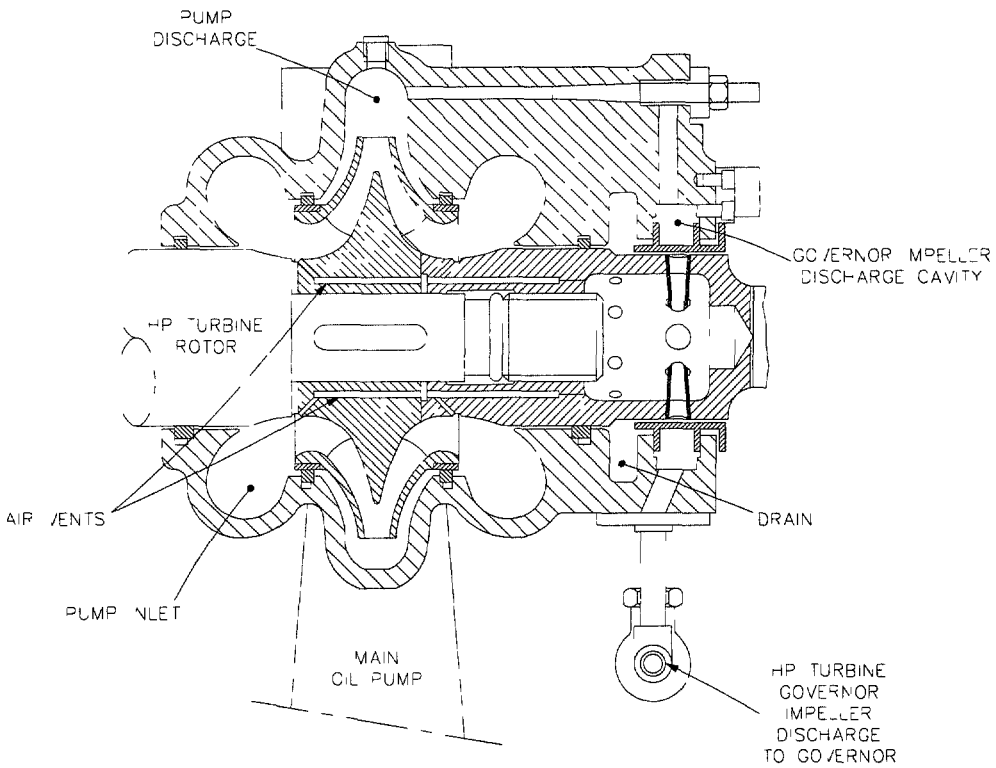

Figure 3-77 Typical Westinghouse Main Oil Pump and Governor Impeller

338

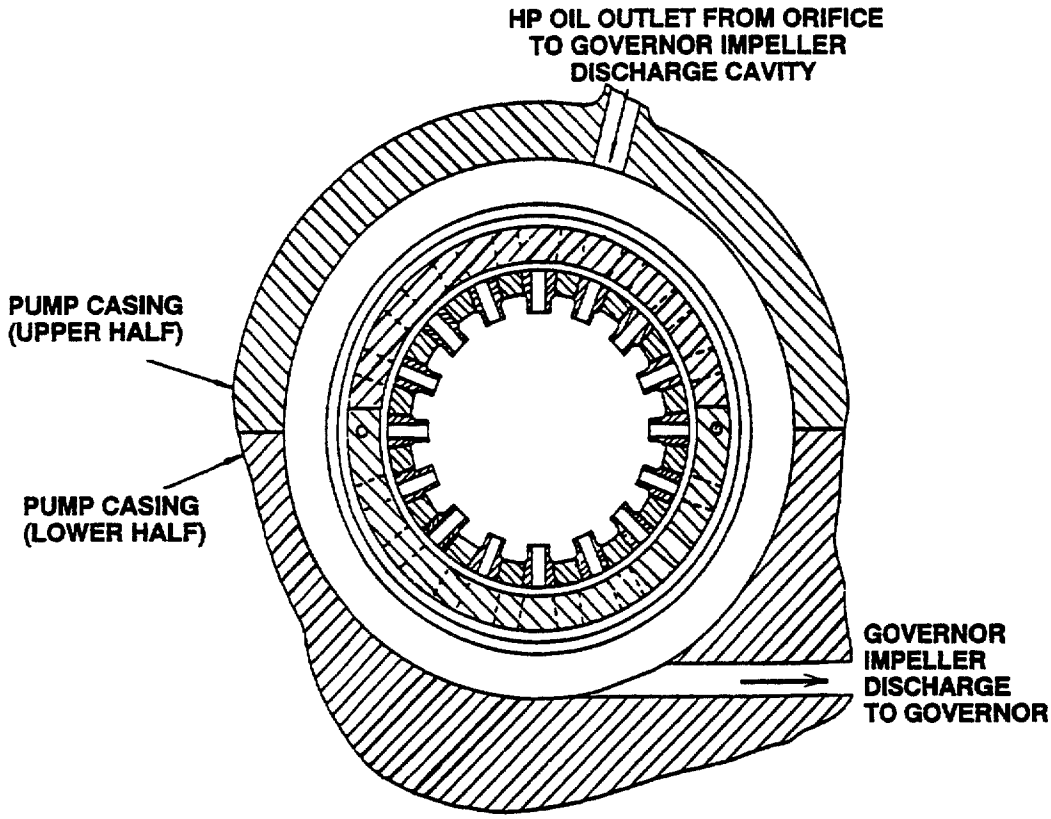

Figure 3-78 Cross-Section of Governor Impeller

339

To understand how the simple system in **Figure 3-76** works, consider the scenario in which the turbine is in operation at 3600 rpm but not synchronized to the electrical distribution system If the turbine speed falls, the governor oil impeller pressure falls as well This results in the servomotor opening the governor valve to restore speed Conversely, if the speed were to increase, the governor impeller pressure would increase as well, thus causing the servomotor to close the governor valve The simple system described here has several serious limitations The "real" Westinghouse MHC systems add many features and devices that are required to make this system practical

3 9 2 MHC Amplifiers

The simple MHC systems described in the previous section are not practical for large turbines It is very difficult to build a governor that both accurately senses turbine speed and develops enough force to open and close the turbine valves Many years ago, small units were built which had just such a system Some small turbines are still built with such a system The weights of the governor for these units are massive, and the turbine is relatively small with relatively small valves It was not practical to build governors with larger weights as the size of turbine-generators increased The solution to this problem was to develop the MHC amplifier like that shown in **Figure 3-79** Such an amplifier is often called a relay

The MHC amplifier consists of a small valve, called the pilot valve, which can either admit high pressure hydraulic fluid to a hydraulic cylinder, causing it to open, or drain fluid from the cylinder, causing it to close The stems of the operating cylinder and the pilot valve are connected by a lever in such a way as to cause the movement of the hydraulic cylinder to be "fed back" to the pilot valve The amplifier works as follows

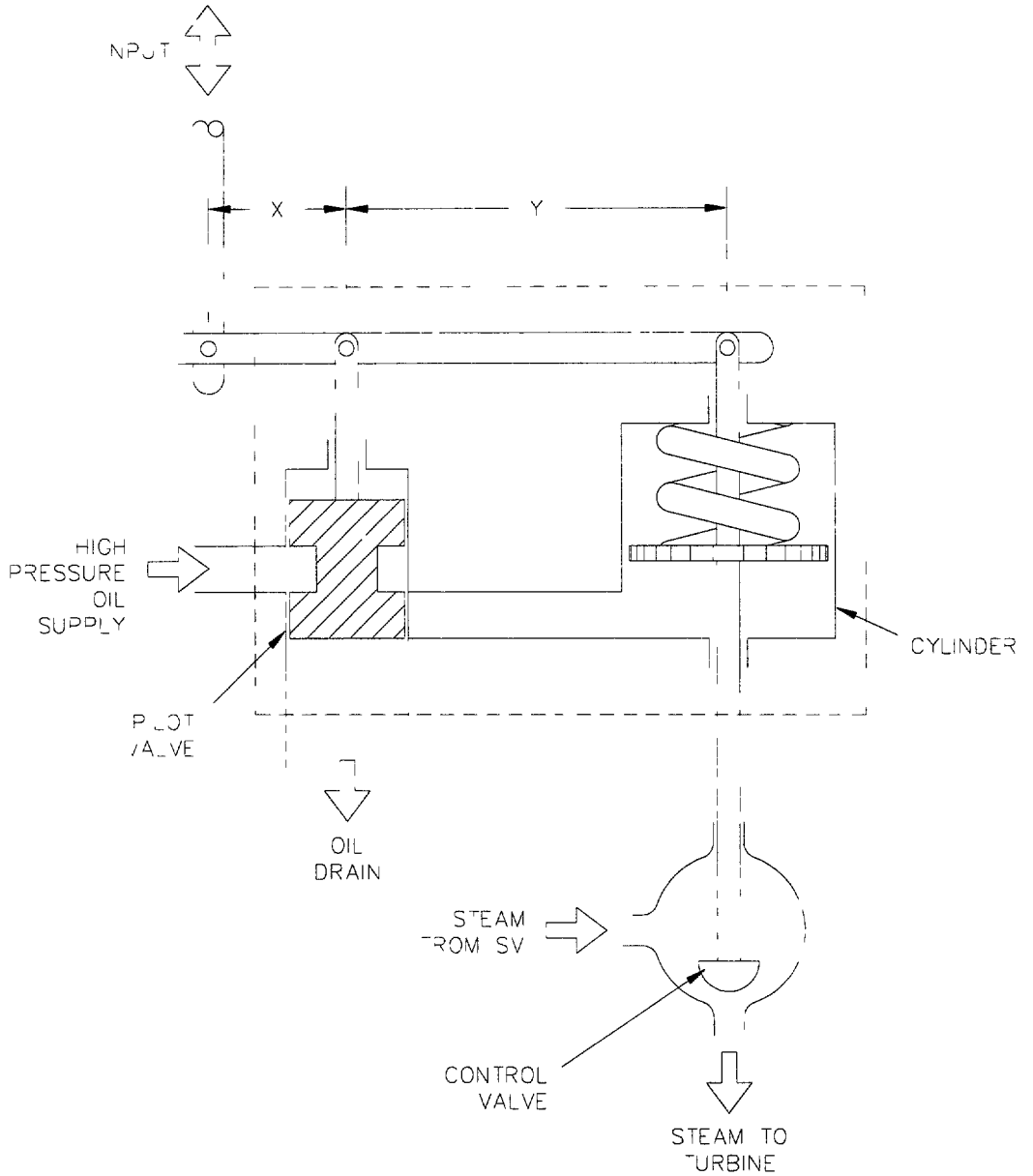

Figure 3-79 Simplified MHC Relay/Amplifier

341

If the lever is moved down slightly at the pilot valve, the pilot valve admits high pressure fluid beneath the hydraulic cylinder causing it to move upward against the closing force of the spring, opening the valve As the hydraulic cylinder moves upward, the lever causes the pilot valve to move up, shutting off the flow of high pressure fluid to the cylinder and so stopping its movement Similarly, if the valve is open and it is necessary to close the valve slightly, the pilot valve is raised slightly, dumping the high pressure fluid beneath the cylinder to drain As the cylinder moves down, the lever makes the pilot valve move down and so shut off the port to drain, stopping the movement of the cylinder Note that in each case the pilot valve is restored to essentially the same position when a new equilibrium is established In fact it acts as the fulcrum for the lever system

The input to the amplifier is the movement at the left end of the lever and the output is the movement of the hydraulic cylinder The amount of the output that is produced for a given input depends on the position of the pilot valve stem, the fulcrum, on the lever If the position of the pilot valve stem is such that it splits the lever equally (lengths "x" and "y" are equal) then the output is equal in magnitude to the input If the fulcrum is moved towards the input end of the lever such that "x" is one half as large as "y," the output is twice the input Thus the ratio of the input to the output is equal to the ratio of "y" to "x " This refers, of course to the motion The force behind the movement will depend on the diameter of the cylinder and the pressure of the hydraulic fluid

The pilot valve can be designed so that a very small movement uncovers the ports to the high pressure fluid source or the drain Also, the force required to move the pilot valve can be made very small This means that it is possible to amplify small movements with low forces to large movements and forces

The amplifier can be used together with the flyball governor to move the turbine valve as shown in **Figure 3-80** Using this system it is possible to have a small, accurate flyball governor which can control large valves The hydraulic cylinder operated by the governor is commonly called the speed relay in this system In practice, for large steam turbines, the valves and the forces are so large that two amplifiers must be used in series

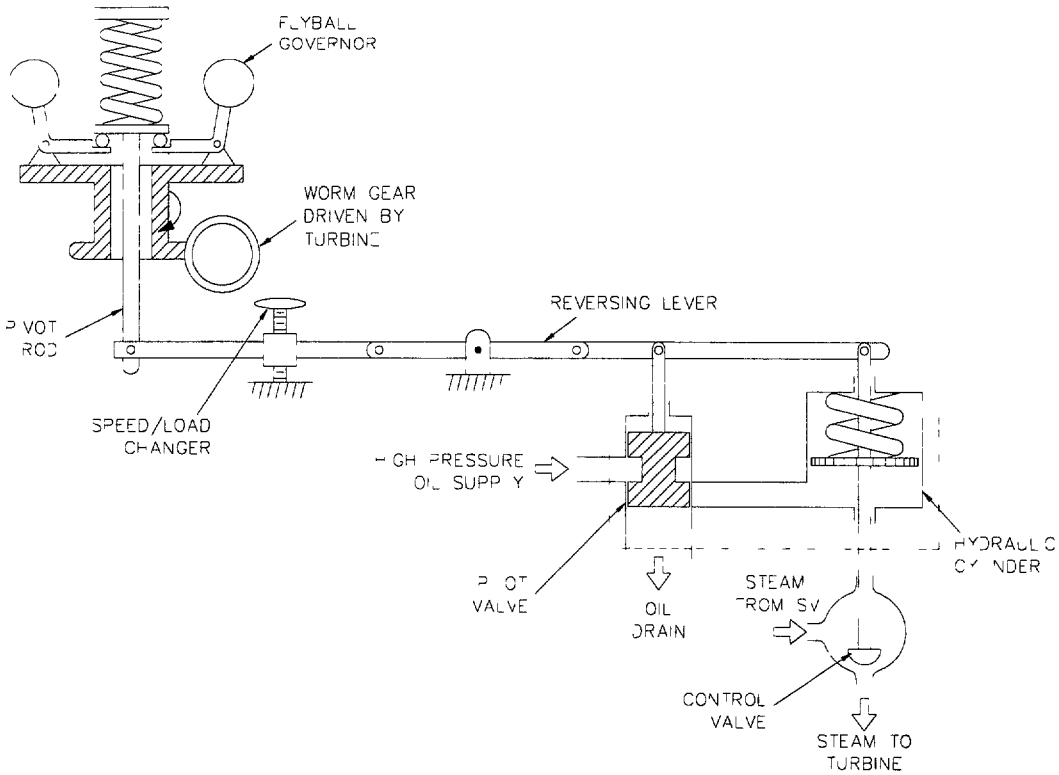

Figure 3-80 Simple Flyball Governor with MHC Relay

343

Another variation seen for large steam turbines is a special pilot valve which is used in conjunction with the flyball governor It is called the rotating primary pilot valve and is shown in **Figure 3-81** The pilot valve itself is attached to the flyball governor so that it turns with the governor and moves downward as the speed of the governor increases, causing the weights to move outward

The fact that the pilot valve is spinning helps keep the valve clean and reduces the friction between the valve and the speed bushing, thus reducing the force required to move the valve The speed bushing is free to slide up and down over the pilot valve and inside the valve housing The ports in the housing and speed bushing, and the lands on the pilot valve are arranged so that in normal operation the ports to the high pressure fluid and drain are just closed If the speed bushing remains in the same position, and the turbine slows, the weights on the governor move inward, raising the pilot valve and opening the port from the high pressure fluid source to the operating cylinder This opens the steam valve more, speeding the turbine back up and restoring the pilot valve to very nearly the same position as before the speed change, closing off the high pressure fluid to the operating cylinder

The speed setpoint of the turbine may be changed by adjusting the position of the speed bushing If the bushing is moved down, a port in the bushing is uncovered, admitting high pressure fluid to the operating cylinder, opening the turbine steam valve and so speeding the turbine up This causes the weights of the governor to move out and the pilot valve to move down, covering up the port to the high pressure fluid When the new equilibrium is reached, the relative position of the pilot valve and the speed bushing is the same, and both the pilot valve and bushing are slightly lower The turbine speed increases

3 9 3 Control of MHC Turbine Steam Valves

The control of the turbine speed and load is accomplished by controlling the flow of steam into the turbine The steam flow is controlled by the position of the steam valve There is a problem in the control of flow with a valve, however The steam flow does not increase evenly as the valve is opened As **Figure 3-82** shows, the steam flow may be 25% of maximum when the valve is opened only 10% As the valve continues to open the flow may increase from 75% to 90% when the valve opens from 50% to 95% Such a situation is described as being non-linear

344

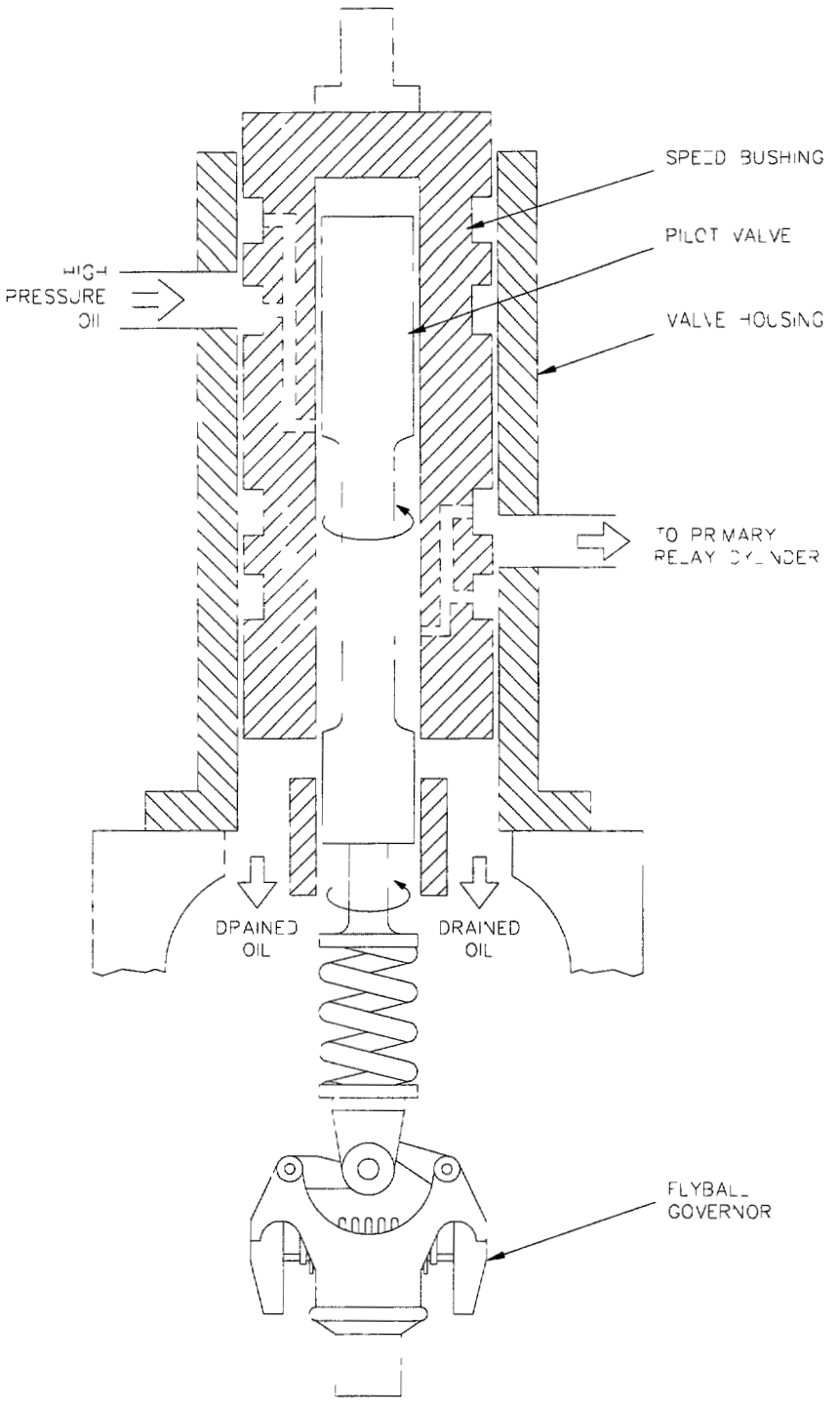

Figure 3-81 Flyball Governor with Rotation Pilot Valve and Speed Bushing

345

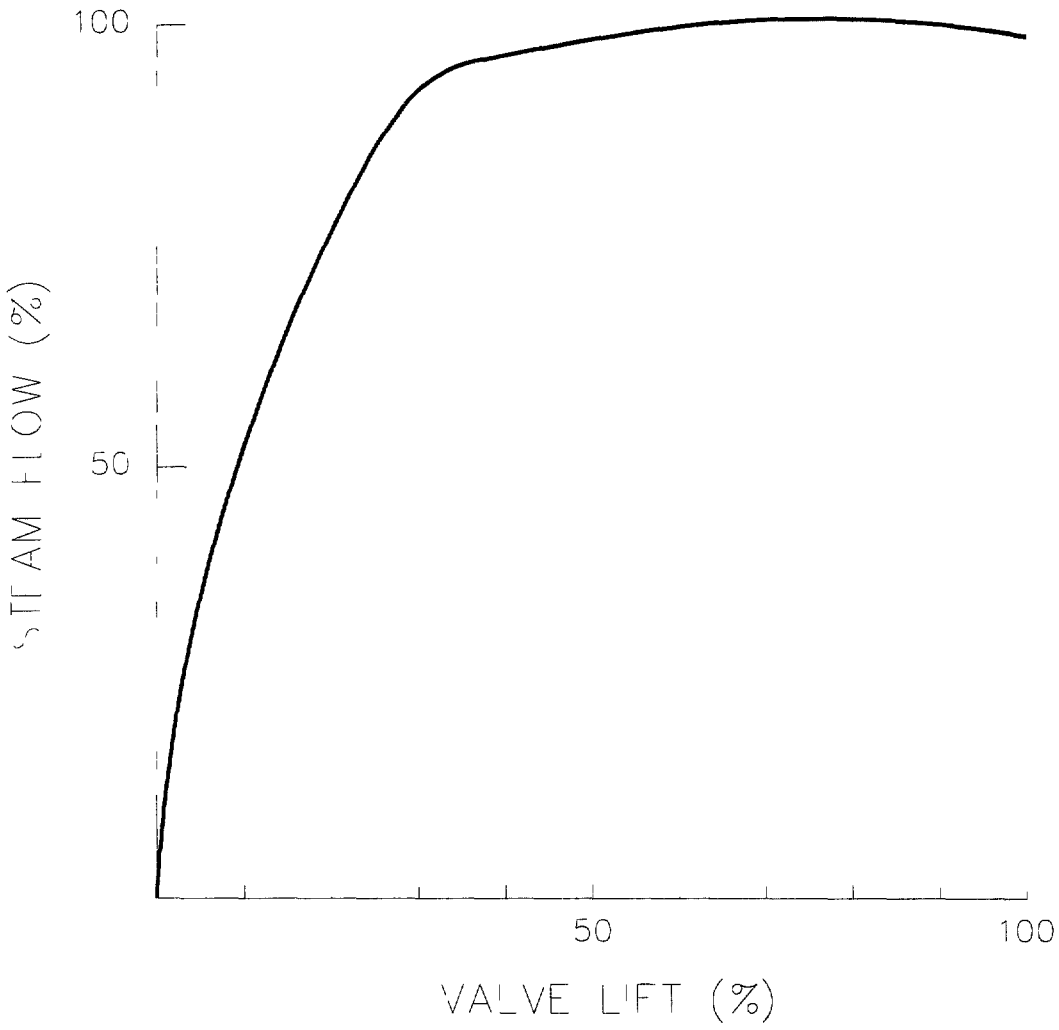

Figure 3-82 Characteristic of Flow vs Lift for Steam Valve

The practical effect of this non-linear situation is illustrated by considering a speed load changer which has ten turns from full closed to full open The steam flow will increase to 30% when the speed/load changer is opened one turn It might take two more turns to increase steam flow another 35% to 65%, and the remaining seven turns to bring steam flow to 100% It would be much easier to control the turbine if the flow increased 10% for each turn of the ten turn speed/load changer

It is possible to correct this problem by using a cam and roller between the operating cylinder and the valve stem as shown in **Figure 3-83** The valve stem is raised as the cam turns The cam rotates to fully open the valve as the speed/load changer is adjusted from fully closed to fully open The amount that the valve opens for a given amount of cam rotation depends on the shape of the cam The cam shape is designed so that one turn of the ten turn speed/load changer produces a 10% change in steam flow regardless of whether it is the first or last turn of the speed/load changer Such a situation is described as being linear

Once again, a very simple system has been described In reality turbines are more complicated, and the turbines generally have a number of CVs/GVs The most common arrangement for such turbines is to open the CVs/GVs sequentially That is, (assuming that there are four valves numbered one through four), valve number one is opened first while the other valves remain closed When the number one valve is almost fully open, the number two valve cracks open When the number two valve is nearly fully open, the number three valve cracks open, and so on until all four valves are fully open In an MHC system, this can be accomplished by using cams which are oriented on the cam shaft to open the valves in the proper sequence while at the same time, "linearizing" the flow in each valve The result is a curve of cam shaft rotation versus steam flow which looks something like that shown in **Figure 3-84** The amount of cam shaft rotation corresponds to a parameter commonly called total CV/GV position

3 9 4 A Nonreheat MHC System

Figure 3-85 shows a nonreheat MHC system which has nearly all of the features that would be seen on a nonreheat large steam turbine Reheat turbines, which are more complicated, are discussed later

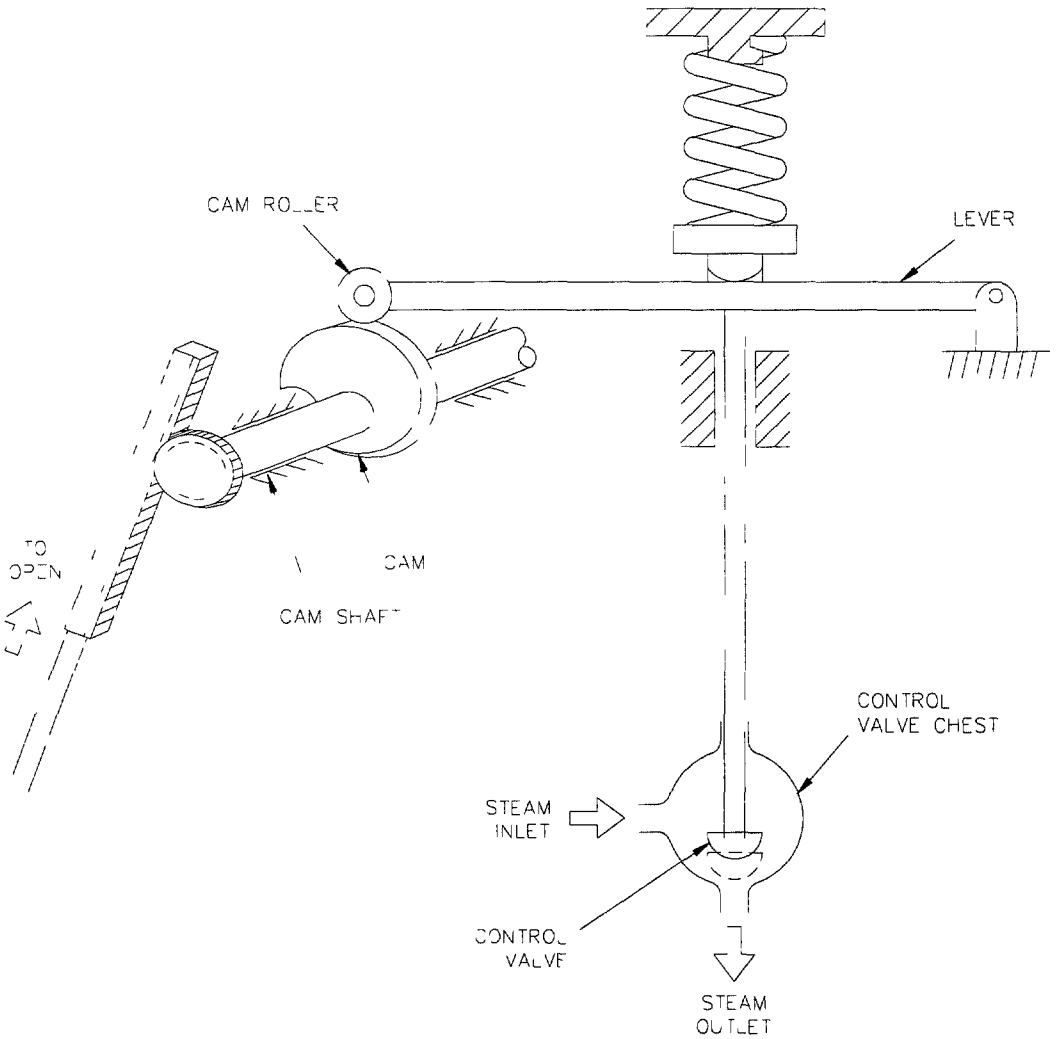

Figure 3-83 Simplified Valve Gear Using CAM & Roller to Linearize Flow

348

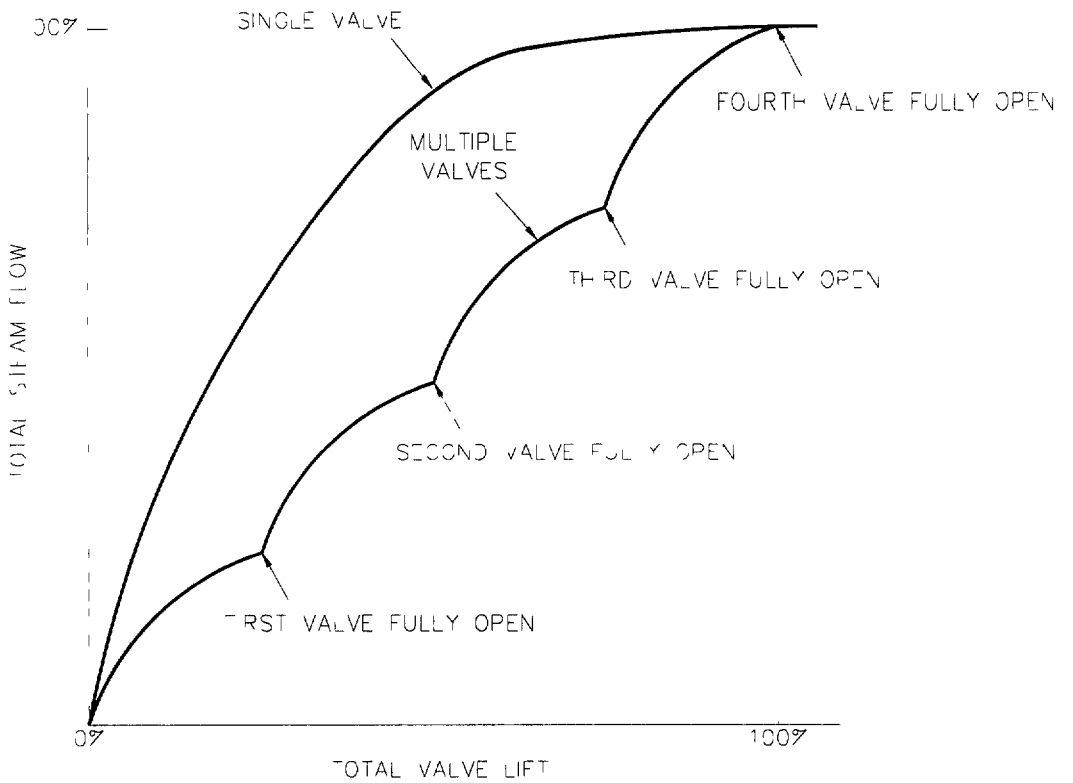

Figure 3-84 Comparison of Characteristic Flow vs Lift for Single vs Multiple Valves

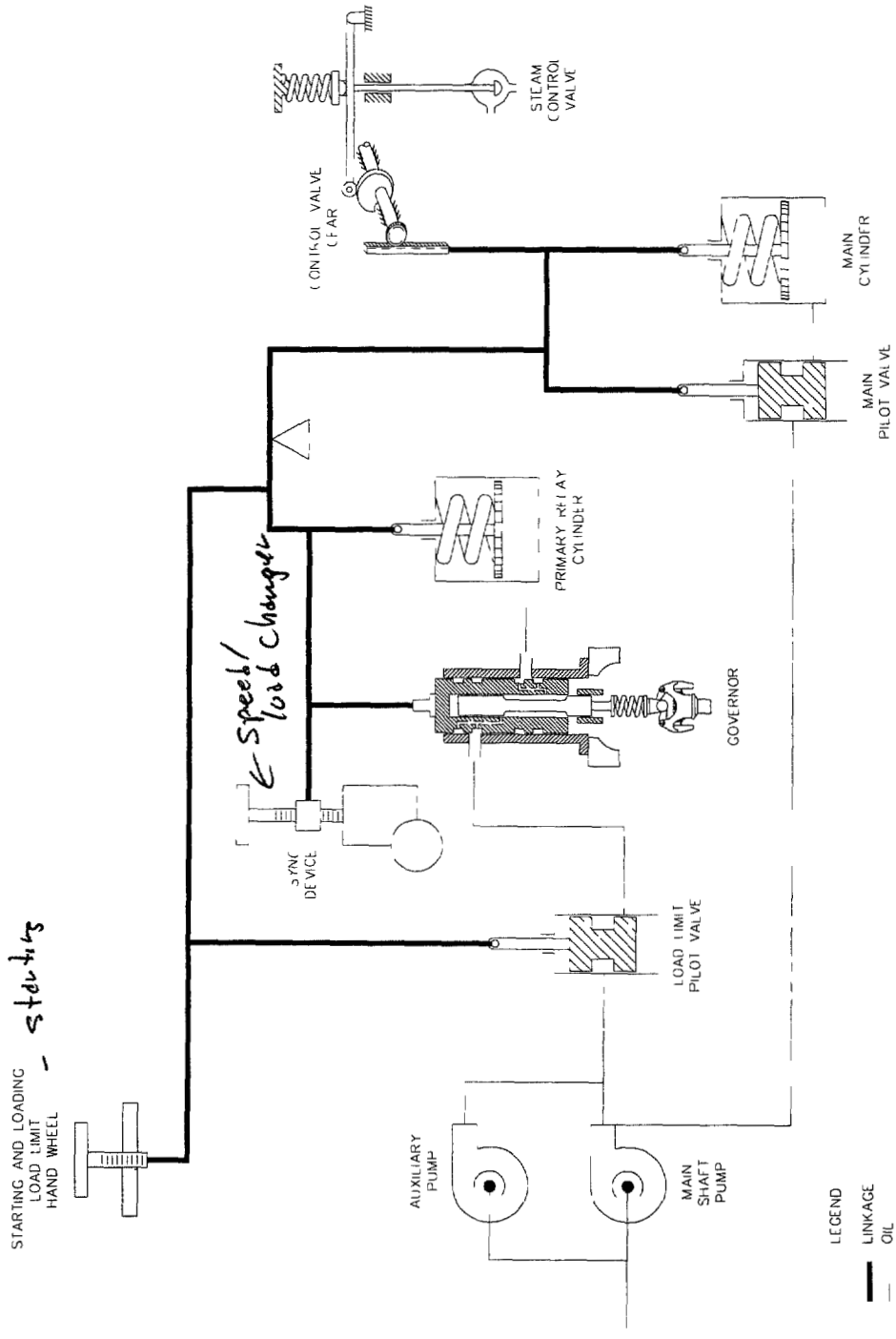

Figure 3-85 Simplified Nonreheat Turbine MHC Control System Diagram

The hydraulic fluid is lube oil supplied from the main shaft oil pump in normal operation Notice that the system employs a rotating pilot valve and two hydraulic actuators (which act as amplifiers) in series The CVs/GVs are opened with cams as described earlier There is also a new element in the system called the load limit which consists of a load limit pilot valve and starting/load limit handwheel to adjust the pilot valve

The load limit pilot valve is placed between the source of high pressure hydraulic fluid and the primary pilot valve In this position, the load limit pilot valve can limit the action of the primary pilot valve by cutting off the high pressure hydraulic fluid to the primary pilot valve The load limit pilot valve is connected to the primary relay cylinder by a lever which has the attachment of the starting/load limit pilot valve as its fulcrum

The load limit device has two functions First, it provides a means to limit load When the load limit/starting handwheel is adjusted fully downward, the load limit pilot valve admits full hydraulic fluid pressure to the primary pilot valve regardless of the position of the primary relay cylinder and thus the steam valves If the load limit pilot valve moves upward, the supply of high pressure fluid is cut off, and the primary pilot valve is ported to drain This causes the primary relay cylinder to close until the position of the load limit pilot valve is restored

The effect of the load limit device is that it allows the primary pilot valve to control the steam valves as long as it does not try to open them further than the setpoint of the load limit The load limit is sometimes referred to as a ceiling limiter for that reason It might be used in order to ensure that the unit load is not accidentally increased beyond a set point due to plant limitations For instance, if one boiler feed pump were out of service in a plant with two boiler feed pumps, the load limit might be set at 50% to insure that unit load were not increased beyond the capacity of the single feed pump

Note that while the load limit is controlling the turbine, changes in speed will not cause any movement in the steam valves unless the speed increases so much that the primary pilot valve is calling for a lower governor valve position than the load limit Thus, the turbine will generally not participate in load sharing with the rest of the system when the load limit is controlling

For some turbines, the load limit device is also used to start up the turbine This is necessary because the flyball governor only functions in a narrow range of speed from about 90% to 110% of rated speed If the flyball governor and primary pilot valve were the only devices used to control the speed of the turbine at start up, the turbine speed would jump to about 90% as soon as the turbine is reset (which opens the throttle valve(s)) even though the speed/load changer was on the low speed stop This is called a "sling shot start " In order to avoid the sling shot start, the turbine controls are arranged so that the turbine cannot be reset unless the load limit/starting handwheel is at its low limit stop Thus when the turbine is reset, the governor valves remain closed because the supply of high pressure fluid to the primary pilot valve has been cut off by the load limit pilot valve

To start the turbine, the governor is set at its low stop and the load limit/starting handwheel is slowly opened This slowly opens the governor valves and allows the operator to control speed during the startup below the operating range of the governor As the speed is increased to the lower limit of the operating range for the governor, the governor will "take over" from the load limit Increasing the load limit position beyond this point will have no further effect on turbine speed The load limit is usually brought to its high stop and turbine speed is then adjusted with the speed/load changer It is necessary to adjust the speed of the turbine very precisely to match the electrical frequency of the generator to the frequency of the system before the generator can be synchronized Since this fine speed adjustment is done with the speed/load changer, it is sometimes called the synchronizing device

After the unit has been started up and the load limit is at its high stop, load is controlled with the speed/load changer There is usually a special motor connected to the speed/load changer to adjust its position The speed/load changer motor is controlled by a control switch which is usually in the control room

352

3 9 5 Overspeed Protection for a Nonreheat MHC Unit

So far in the discussion of controls, normal operations have been discussed, such as rolling the turbine up to rated speed, synchronizing, and changing load Another important function of the control system is to protect the turbine-generator from overspeed The following discussion applies to nonreheat units Reheat units are discussed in the next section

The control system is designed to prevent the peak overspeed from ever exceeding 120% of rated speed This type of overspeed incident is most likely to occur when the generator breaker trips open while there is a load on the unit Remember that only about 2% of rated steam flow is required to keep the unit at FSNL If the breaker trips open when the unit is at full load and there is 100% of rated flow, the unit will accelerate to destructive overspeed in a matter of a few seconds The rate of acceleration of the turbine depends on two factors One is the size of the unit Small units with relatively light, small diameter rotors will accelerate more quickly than larger units with heavier, larger diameter rotors

The second factor determining the rate of acceleration is the unit load The higher the load, the higher the pressure of the steam in the main steam leads and turbine, downstream of the governor valves When the valves trip closed, the steam trapped in the piping and turbine will continue to expand through the turbine to the condenser and so continue to drive the turbine above rated speed The rate of acceleration and the peak speed the turbine will achieve depends on the pressure of the trapped steam which in turn depends on the load at which the turbine trips

In order to prevent destructive overspeed, the control system must close the turbine valves very quickly (in less than a second) when an overspeed incident occurs Remember that there are two sets of valves in series to provide two lines of defense against destructive overspeed There are also two different means of closing the valves in order to extend these two lines of defense to the control system

The first line of defense is the turbine governor As soon as the governor senses an increase in speed above rated, it begins to close the governor valves Unfortunately, because of the small passages in the primary pilot valve, it takes a

relatively long time (on the order of seconds) to close the valves completely If the generator breaker opens at low load, the rate of acceleration may be slow enough for the governor to "catch it" before the speed increases to the danger point If the unit is at or near full load, however, the rate of acceleration may be too great for the governor valves

The second line of defense is the emergency overspeed governor This is a device (shown in **Figure 3-86**) which is mounted on the end of the turbine rotor The emergency overspeed governor consists of a weight which is held against the shaft by a spring The spring is adjusted so that at rated speed the force of the spring overcomes the centrifugal force on the weight and so holds it against the shaft If the speed of the rotor increases above an adjustable trip point, the centrifugal force on the weight overcomes the spring force and the weight snaps out, moving a small distance, usually about 1/4 inch

The emergency overspeed governor is mounted close to a trip finger in the trip system A typical trip system for an MHC system is shown in **Figure 3-87** When the weight snaps out, the weight hits the trip finger As soon as the trip finger is tripped, a spring loaded trip valve is opened which dumps the high pressure fluid in the trip system to drain All of the main steam valves are connected to the trip system, and the main steam valves trip closed in a fraction of a second

The trip point on the emergency overspeed governor is usually between about 106% and 112% of rated speed, depending on the size of the unit In the event that an overspeed incident occurs, the governor will immediately start to close the governor valves If the governor can limit the peak overspeed to a point below the trip point for the emergency overspeed governor, then there will not be a trip The unit will "settle out" at a speed slightly higher than rated, how much higher depends on the load the unit was carrying, the regulation, and system frequency prior to the incident If the unit had been at valves wide open (VWO), the final speed would be about 107% of rated It would then be necessary to resynchronize the unit with the speed/load changer

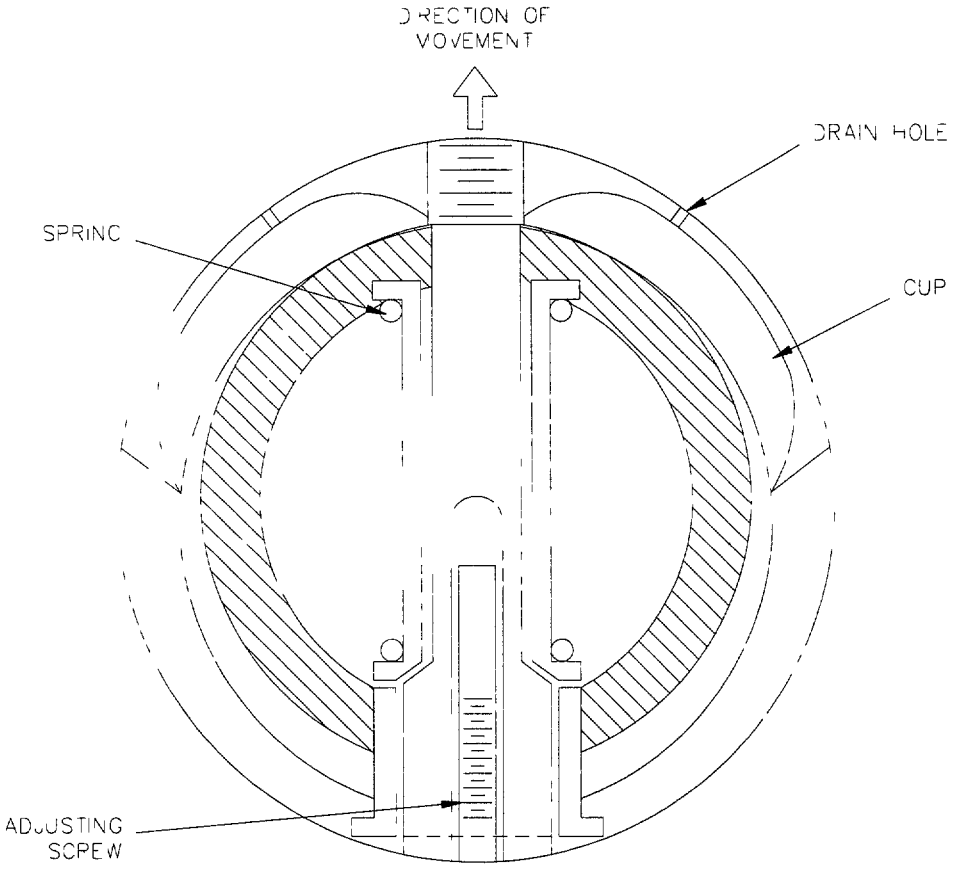

Figure 3-86 Typical Emergency Overspeed Governor Cross-Section

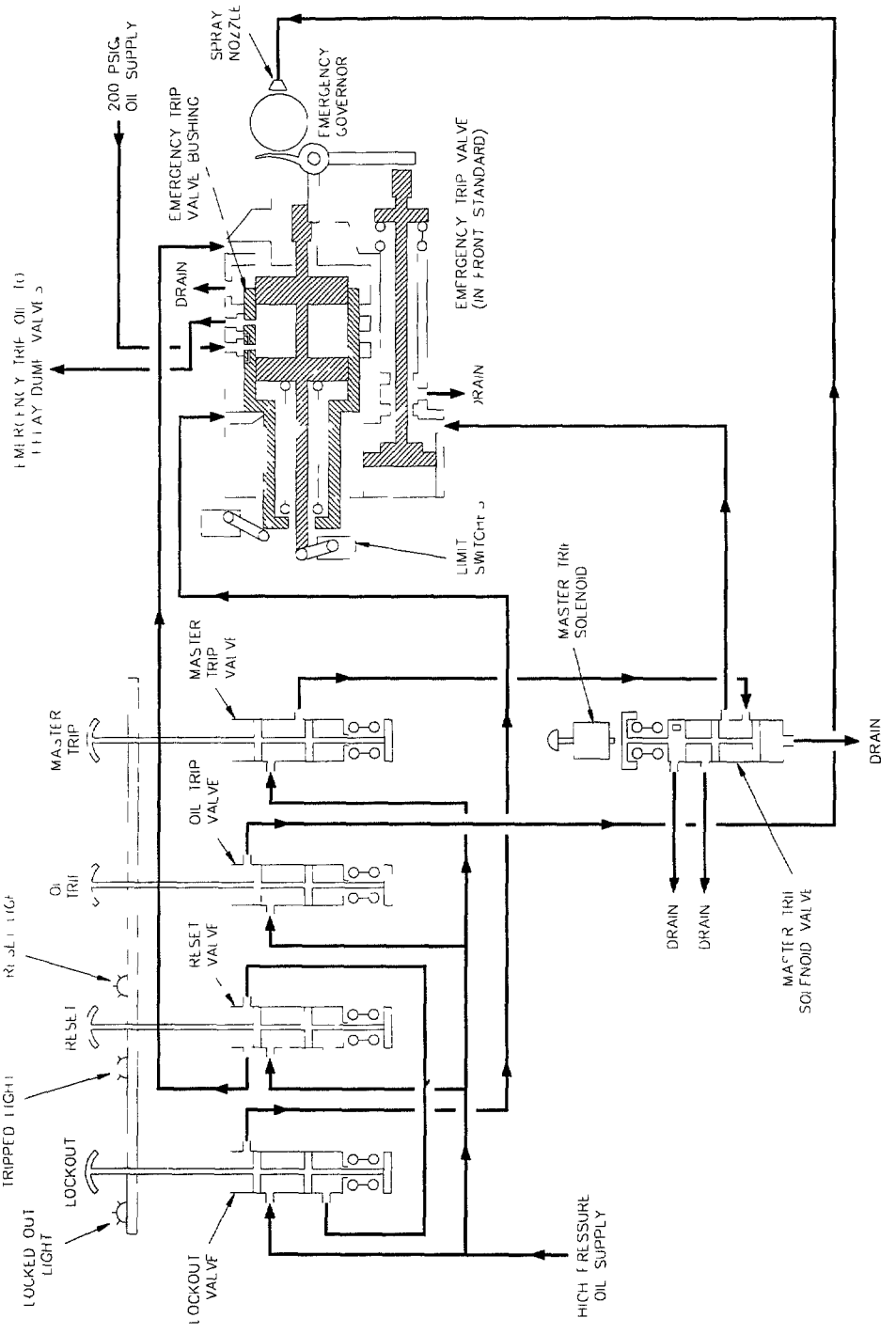

Figure 3-87 Typical, Simplified MHC Trip System Arrangement

256

If, because the load on the unit is too high when the overspeed incident occurs, the governor cannot limit the peak overspeed below the emergency overspeed governor trip point, it will trip all of the main steam valves closed The unit will continue to accelerate after the trip The emergency overspeed trip point is calculated to limit the peak speed to less than 120% of rated speed regardless of how high the load on the unit is during an overspeed incident It is then necessary to reset the unit in order to restart and synchronize it

3 9 6 Reheat Unit MHC Controls

Discussions of the turbine control system have so far been devoted to nonreheat units Many steam turbine-generators are reheat units That is, the steam exhausting from the high pressure turbine is returned to the reheater section of the boiler where it is reheated and then returned to the intermediate pressure (IP) turbine. As was explained earlier, another set of valves is required for a reheat unit in the hot reheat piping at the inlet to the IP turbine These are the reheat stop and interceptor valves

These valves are required for overspeed protection in addition to the throttle and governor valves, because in the reheat unit there is additional steam entrained in the cold reheat piping, the reheater in the boiler or HRSG, and the hot reheat piping Because of this additional steam, the turbine would be driven to destructive overspeed even if the throttle and governor valves were to close instantly upon an overspeed incident Note that both the interceptor and reheat stop valves are wide open during normal operation The only time that they close is during abnormal situations, most often overspeed

Figure 3-88 shows an MHC control system for a typical reheat unit It has several devices or features which were not in the diagram for the nonreheat unit Perhaps the most important of these is the pre-emergency speed governor This is a second flyball governor, called the pre-emergency governor, dedicated to the control of the interceptor valves

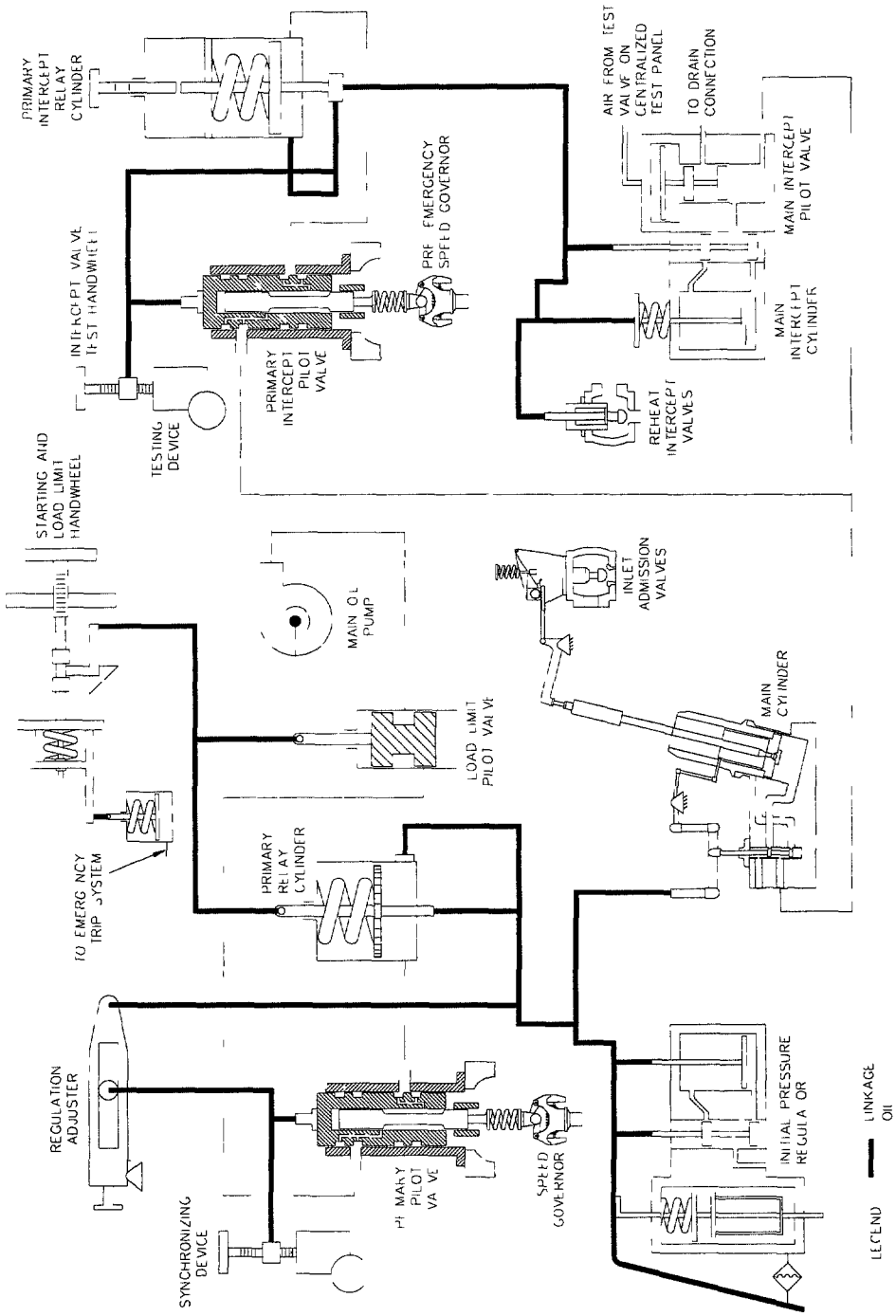

Figure 3-88 Simplified Reheat Turbine Control System Diagram

358

The pre-emergency governor is constructed exactly the same as the main governor with a flyball governor attached to a rotating pilot valve with a speed bushing In normal operation, the speed bushing for the pre-emergency governor is left at a constant setpoint The regulation and setpoint for the pre-emergency governor are set up so that the interceptor valves are fully open at about 10% load and will remain fully open until the unit begins to overspeed The interceptor valves will be fully closed when the unit reaches about 103% to 105% of rated speed If the unit does not trip, the interceptor valves will begin to reopen and "blow down" the reheater as the turbine speed returns to normal In the event that the unit exceeds the emergency overspeed governor trip point, both the reheat stop and interceptor valves will be tripped along with the throttle and governor valves

The speed bushing for the pre-emergency governor can be adjusted using the interceptor valve test handwheel When the unit is at rated speed, the only time the interceptor valves are closed is when this handwheel is adjusted to close the valves as part of a test

There are two other devices on this diagram which have not yet been mentioned The first of these is the regulation adjuster This is an adjustable fulcrum for the feedback lever from the primary relay cylinder to the primary pilot valve It allows the regulation to be adjusted from about 2% to 7% As mentioned earlier, for all units in this country, the regulation should be adjusted to 5% to insure proper load sharing

The second added device is the initial pressure regulator (IPR) The purpose of the IPR is to protect the turbine from carryover of water from the steam generator in the event of an upset If pressure rapidly falls there may be carryover of water into the turbine, which can result in severe damage to the turbine The IPR senses the steam generator pressure, and if it falls, starts to close the governor valves This helps keep the steam generator pressure from falling so quickly and minimizes the possibility that water will be carried over to the turbine

The IPR is a mechanical hydraulic device with an input from a piston and cylinder connected to the main steam piping by a sensing line The piston is spring loaded and moves as the main steam pressure changes The movement from the

steam cylinder is input to an MHC amplifier The output from this amplifier is connected to the secondary operating cylinder pilot valve through a lever The other end of the lever is connected to the output from the primary operating cylinder This lever effectively sums the inputs from the primary relay cylinder and the IPR The arrangement of the system is such that the IPR will begin to close the valves at an adjustable setpoint, usually 90% of rated steam pressure, and closes the governor valves to the FSNL position when the pressure falls to 80% of rated The governor valves are generally not allowed to close completely because it is necessary to keep some steam flowing through the turbine for cooling of turbine blades

The initial pressure regulator may be disabled by adjusting a turnbuckle in the link between the steam pressure sensing cylinder and the IPR pilot valve to the "out of action stop " This moves the IPR pilot valve to a position which prevents it from ever producing an output that would close the valves The IPR must be removed from service when starting up a unit because the boiler will generally be at much less than rated pressure at startup Often rated pressure is not reached until the unit has reached 25% load, and sometimes higher

The term IPR is specific to GE MHC turbines Westinghouse calls their device that performs the same function the Throttle Pressure Regulator (TPR) Still another name is sometimes used on some EHC systems, Main Steam Pressure Limiter (MSPL)

3 9 7 Boiler Following, Turbine Following, and Inlet Pressure Control

The turbine control systems described to this point in this Section are typical of what would be found in an older conventional, Rankine Cycle plant In the conventional Rankine cycle unit it is possible to separate the operation of the boiler and the steam turbine to a much greater extent than is possible in the combined cycle plant In combined cycle plants, the modes of control offered by these older systems are not adequate because the gas turbine, HRSG and steam turbine must be operated together as an integrated unit To understand the difference between the control situations, consider the following

In the older, conventional Rankine cycle plant there is no integration of the turbine and boiler controls The turbine controls function as described in the previous sections The only "link" between the boiler and the turbine is the IPR and then only if the IPR is in service

The boiler controls in an older conventional Rankine cycle plant are designed to control the boiler pressure The three major components of the boiler controls are the control of fuel, combustion air and feedwater flow The feedwater flow is modulated to maintain the level in the boiler drum within safe limits Most boilers utilize a three element control system for drum level control that senses feedwater flow, steam flow and drum level All three signals must be used to prevent excessive oscillation of the drum level In general the drum level control functions to increase the feedwater flow as load increases and reduce feedwater flow as load decreases while maintaining the drum level within safe limits

Combustion air and fuel controls are generally controlled through the boiler master The boiler master modulates the fuel and combustion air flows to maintain the boiler pressure at the superheater outlet at a setpoint Fuel and air flow must be controlled together to assure that a safe fuel air ratio is maintained under all operating conditions A safe fuel air ratio is one that does not have too much fuel (fuel "rich") If there is too much fuel, it is possible to extinguish the fire in the boiler It is very dangerous to lose fires in the boiler because an explosion can result The potential for improper fuel air ratio occurs when there are changes in load In general a increase in demand results in an increase in airflow, followed by increase in fuel flow and a decrease in demand results in a decrease in fuel flow followed by a decrease in air flow This control scheme assures that there is never a fuel rich situation that could result in a loss of fire in the boiler

In most older, conventional plants the boiler and the turbine were operated together in a mode called "boiler following " In this mode of operation the operators would respond to an increase in demand by opening the turbine valves using the turbine controls As soon as the turbine valves open, steam flow increases and as a result load also increases The increased steam flow also results in a drop in boiler pressure The boiler master responds by increasing fuel and air flow (often called the firing rate) The drum level controls respond by increasing the feedwater flow

After a period of a few minutes (for a moderate increase in load), the boiler pressure is restored

There can be problems with boiler following operation Sudden, large increases in demand can cause boiler drum level oscillations and fuel and airflow oscillations that are difficult for the operator to control These oscillations can result in the unit tripping There is another mode of operation of the turbine and boiler together that eliminates this problem That mode of operation is called "turbine following" operation

In turbine following operation, the turbine GVs/CVs are used to control boiler pressure This is done by using a pressure signal in a control loop that positions the GVs/CVs In the turbine following mode of operation, the operator increases the boiler firing rate to increase unit load As the firing rate is increased, the boiler pressure tends to increase, but the turbine GVs/CVs open to maintain pressure at the setpoint The advantage of this mode of operation is that the boiler drum level and fuel and airflow remain nearly constant The disadvantage of the turbine following mode is that the response to changes in demand is relatively slow

The source of heat to the steam generator in the combined cycle plant is the gas turbine When the gas turbine load increases, the heat input to the HRSG increases The normal mode of operation for most combined cycle plants is turbine following The mode is normally called initial pressure control (IPC) in combined cycle plants, however

For combined cycle plants operating in IPC mode, changes in demand are sent to the gas turbine first The increase in gas turbine load causes the HRSG pressure to tend to increase The steam turbine GVs/CVs open to maintain the pressure at the setpoint, however The response of the combined cycle plant (considering both the gas turbine load and steam turbine load) is better than that for a conventional plant operating in turbine following because the gas turbine picks up load immediately

While the steam turbine is operated in IPC in normal operation of a combined cycle plant, this mode of operation cannot be used for the startup of the plant The turbine is rolled from turning gear to synchronous speed using speed control

Immediately after synchronization, the steam turbine is loaded using load control After the steam turbine is loaded to some minimum load, the controls are switched to IPC

3 9 8 Electrohydraulic Control Systems Overview

The details of controls systems covered to this point in this Section have been MHC controls Many older turbine that are in service make use of these MHC control systems EHC (Electrohydraulic Control) controls for turbines were first introduced in the 1960's By the mid 1980's, very few new turbines had MHC controls Further, in many other cases the MHC control system components of older turbines became worn and replacement parts became either unavailable or prohibitively expensive In those cases the turbines were retrofitted with EHC controls Nearly all new turbines are equipped with EHC controls as original equipment

Most EHC control systems may be subdivided into analog and digital systems Analog systems convert the various parameters used in controlling the turbine, such as speed and valve position, into a DC voltage The analog portion of the analog EHC system is like an analog computer that computes valve position given inputs of speed and setpoint The analog system calculates valve position using electronic components such as operational amplifiers and diodes Most analog systems use a voltage range of zero to five or zero to ten volts This low voltage is easy to generate and use for control

Analog EHC systems have improved control compared to MHC systems EHC systems are also much more flexible than MHC systems and usually offer more features for improved turbine control

Analog systems have the disadvantage, however, that small induced voltages may be amplified and produce errors in valve position that result in sudden, erratic movement of the valves This problem accounts for the prohibition against walkie talkie radios in the room where the EHC control cabinet is located The tiny voltages produced by transmitting with the radio can be amplified in the EHC system to produce large, sudden valve movement Sometimes the voltages induced are referred to collectively as electrical "noise "

363

Another problem with analog EHC systems is "drift " Drift is a term that describes the changing characteristics of the electronic components in the analog EHC system These changing characteristics result in errors in the calculation of valve position over time Correction of these errors required periodic maintenance and adjustment by trained technicians

Analog systems were used in the first turbine EHC systems because the technology to build a digital system of reasonable size and cost did not exist when analog systems were first developed In digital systems the various parameters used in control are converted to numerical values Valve position is calculated numerically using various algorithms

Digital systems have several advantages over the analog systems that they replaced Flexibility is much greater The digital systems are generally immune to electrical noise (within the controls themselves), and there is no drift

Significant advances in digital computer technology in the mid 1980's made digital control of all types of equipment, including steam turbines, cost-effective Programmable Logic Controllers (PLC's) were developed to fill these equipment control needs A PLC is a small, specialized digital computer developed especially for control of equipment of all sorts The same PLC hardware can be used to control a turbine, a conveyor belt, or a process such as a water treatment system demineralizer For each of these applications, the computer program used by the PLC is different to meet the needs for control of the specific component

Turbine vendors, especially GE, have adopted digital EHC for control of their entire line of turbines, both steam and gas The latest GE EHC system has the same computer hardware for the control of both steam and gas turbines Further, since the applications are so similar, many of the software features are common as well

EHC systems differ considerably depending upon the vintage and manufacturer of the system There are, none the less, many elements of the EHC system which are common This section examines some of those common elements and describes two systems, one analog and the other digital, as examples of the technology

3 9 9 EHC Common Control Elements

Component Arrangement

The details of the number and nature of components in EHC systems vary considerably Most systems, however, have the following

- Control panel/user interface - A dedicated control panel (or panels) or a computer in the control room is usually installed in a central control room Older EHC systems have panels with pushbuttons, control switches, potentiometers, indicating lights Newer systems may have a dedicated computer with a monitor or other display The most modern systems may integrate the turbine controls in a Distributed Control System (DCS) and thus have no dedicated controls

- EHC Cabinet(s) - Most of the electronics for the EHC system are usually located in one or more cabinets The EHC cabinet is usually located in a room near the central control room with other control equipment Often monitoring indications and provisions for adjustments to the system are located in the EHC cabinet

- EHC Hydraulic Pumping System - Most EHC systems have a separate hydraulic system A typical system is described in Section 3 6 Some EHC systems for smaller and/or older units use high pressure lube oil in the same manner as MHC systems

- Main Steam Valve Actuators - The main steam valves are positioned by hydraulic actuators (also called servo motors) The actuators are in turbine controlled using servo and solenoid valves that are controlled by the EHC electronics

- Trip System - The trip system closes all of the main steam valves to shut the turbine down when a potentially dangerous condition, such as low vacuum or low EHC hydraulic pressure, occurs The trip system is usually a combination of electronic and mechanical hydraulic components

Speed Transducer

The EHC system can use any of several different types of speed transducers The most common of these uses a toothed wheel, a magnetic probe, and appropriate electronic circuitry The toothed wheel is mounted on the rotor so that it rotates at the same speed as the turbine The magnetic probe is mounted on a stationary part of the turbine at a very small clearance with the circumference of the toothed wheel

As the rotor spins, each time a tooth passes the probe, a"magnetic blip" is produced The magnetic probe is connected to electronic circuitry (often called Frequency to Voltage, or F/V, Converters) that counts the number of magnetic blips that occur in a given unit of time The number of blips per unit time is called the frequency As an example, it is common to use an 80 tooth wheel for speed sensing A frequency of 4800 Hz is produced by an 80 tooth wheel The frequency is directly proportional to the speed of the turbine The electronic circuitry produces an output that is proportional to the frequency If the circuitry is in an analog EHC system, the output is a voltage If the EHC system is digital the output is digital as well

Figure 3-89 shows a typical arrangement for the speed transducer in an EHC system Redundant speed transducers are often used, as shown in this Figure, because of the critical nature of the speed signal in the turbine controls

Servo Valve

All EHC systems, regardless of whether they are analog or digital, require and interface with the hydraulic elements of the system, the main steam valve hydraulic actuators The servo valve is that interface The servo valve is itself a control valve that is positioned by an electronic signal, usually a current signal, from the EHC electronics **Figure 3-90** shows a cross section of a typical servo valve It consists of a secondary spool that controls the opening of ports which control the flow of fluid in and out of the actuator When the spool moves to the right, fluid is admitted to the actuator, opening the main steam valve When the spool moves to the left, fluid is drained from the actuator, closing the main steam valve The position of the secondary spool is determined by the first stage jet tube

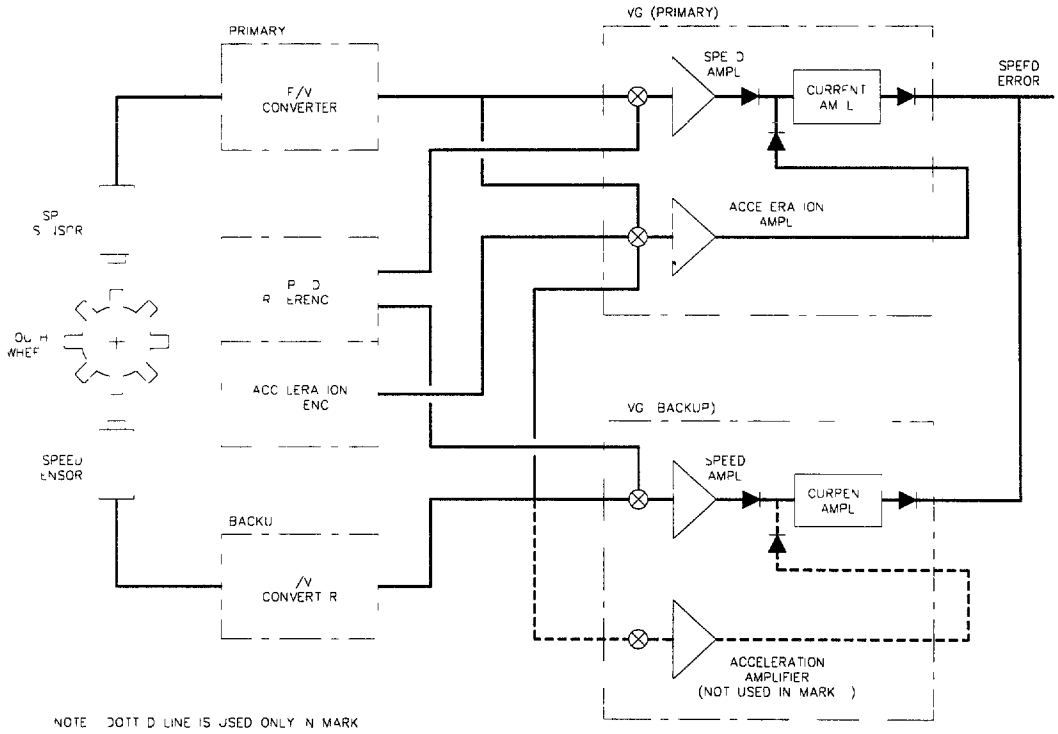

Figure 3-89 Typical GE EHC Speed Control Diagram

367

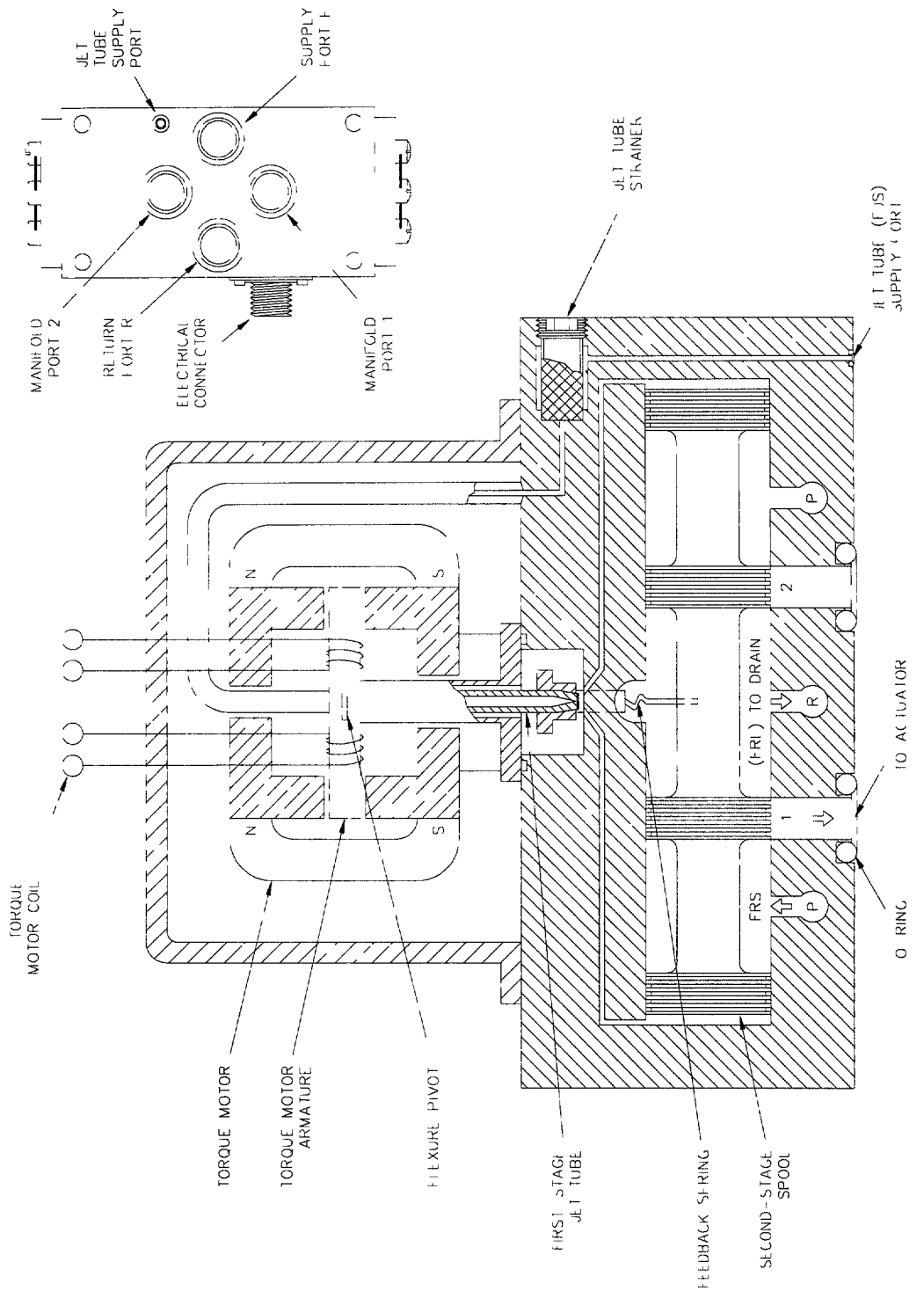

Figure 3-90 Typical EHC Servo Valve

Signals from the EHC electronics go to the torque motor If the torque motor bends the jet tube to the left, the pressure on the left end of the spool is higher than the pressure on the right side, and so the spool moves to the right, opening the main steam valve When the torque motor bends the tube to the right, the spool moves to the left, closing the main steam valve In the event that the signal to the servo valve from the EHC electronics is lost, the fail safe bias spring will push the spool to the left, closing the main steam valve In steady state, normal operation the spool is positioned to allow essentially no fluid in or out of the actuator

Most servo valves require a current signal to function Most EHC systems use an electronic circuit called a current amplifier or servo amplifier to generate that current signal

LVDT

The EHC system requires a feedback signal from the valves to determine their position The most common device used for this purpose is an electronic device called a Linear Variable Differential Transformer (LVDT) One part of the LVDT is a long coil of wire that is "excited" by applying an AC voltage to the coil The current that flows through the coil depends upon the resistance of the coil to AC current, called the impedance The impedance of the coil changes depending upon whether the core is hollow (an air core) or is magnetic The second part of the LVDT is a rod that can slide into and out of the LVDT core The impedance of the coil changes as the core is moved in an out The amount of movement can be very accurately determined (within 0 001 inch) by measuring the impedance of the coil

The LVDT core is usually mounted on the side of an actuator and is stationary The rod that moves in and out of the core is attached to a moving part of the valve Thus as the valve changes position, the impedance of the LVDT changes, and thus the position of the valve can be accurately determined

3 9 10 Example Analog EHC System

There are many variations among analog EHC systems This section illustrates many of the features of a typical analog EHC system by examining a GE EHC MK II system A simplified schematic of this system is shown in **Figure 3-91** This system has three major subsystems, speed control, load control, and flow control Their functions are as follows

Speed Control

The speed control system has three inputs The first input is the speed signal which comes from a speed transducer like that described earlier The other two inputs are setpoints that are setpoints from the operator, one for speed and the other for acceleration These controls are used only during startup

The operator selects the desired speed for the system and an acceleration rate As soon as the speed setpoint is changed, a speed error signal is generated that "tells" the turbine valves to open further The turbine is smoothly accelerated to the new setpoint where, since the speed and the setpoint are the same, the speed error signal is essentially zero

The speed setpoint is fixed at rated speed when the generator is synchronized to the electrical distribution system If the turbine speed is exactly at rated speed, the speed error signal is zero If there are any variations in system frequency, a speed error signal is generated that tends to open or close the turbine GVs/CVs to restore the turbine speed to rated This is the same proportional control that the MHC system uses with a flyball governor

Load Control

The load control unit has several inputs, including the speed error signal from the speed control unit Those inputs are combined to calculate the valve position for the main steam valves During startup, before the generator is synchronized to the electrical distribution system, the only input that the load control unit uses is the speed error signal from the speed control unit The load control unit simply passes through the signal from the speed control unit to position the main steam valves

310

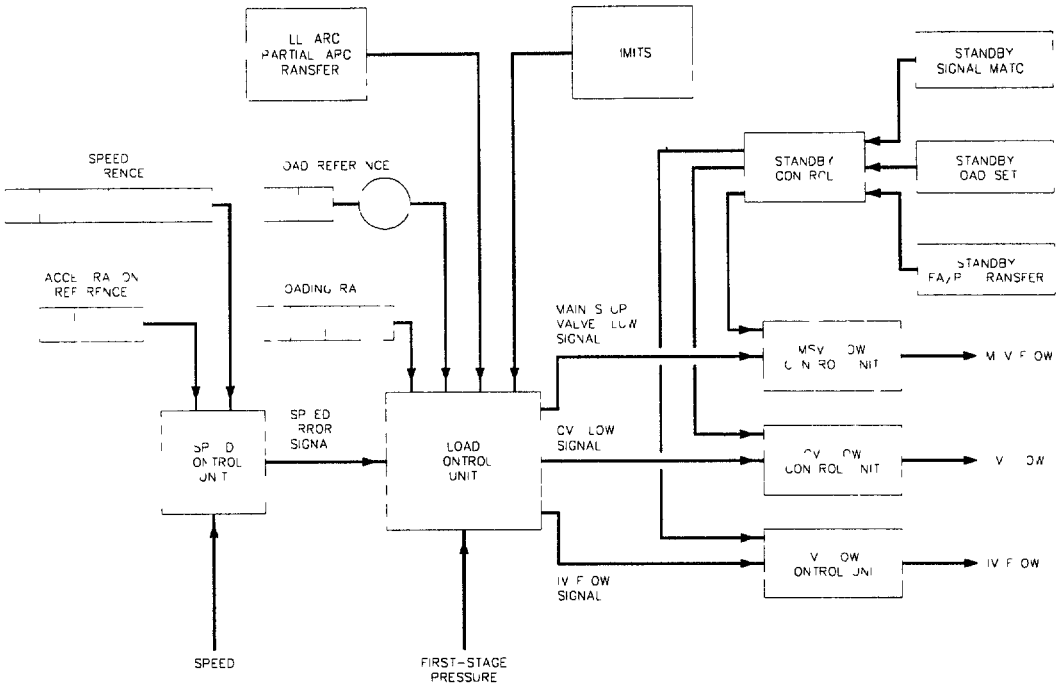

Figure 3-91 Typical GE EHC Block Diagram

371

After the turbine is synchronized, the speed error signal is near zero in normal operation After the turbine is synchronized, the load setpoint and the loading rate setpoint are the principal inputs to the load control unit The operator changes the load reference to input the load setpoint A loading rate setpoint is also selected The load control unit then generates a signal to open the GVs/CVs at the rate selected until the load reaches the new setpoint

There often limiting features in the load control unit One feature that is very common is the load limit The load limit for the EHC behaves in the same manner as that for the MHC system It is a ceiling limiter that prevents the load setpoint (and thus unit load) from being increased above its setpoint

Another limiting feature common to most units is a main steam pressure limiter (MSPL, also called initial pressure regulator and throttle pressure regulator) The function of the MSPL is the same as that described for the MHC IPR It modulates (closes) the GVs/CVs in the event of a drop in steam generator pressure to help avoid water carryover from the steam generator

Almost all newer turbines have the capability to operate in full arc admission and partial arc admission (FA/PA) For most turbines this is usually implemented by using signals called biases to open one set of valves fully while sending the valve position signal to control speed or load to the other set of valves For instance, in full arc admission, the GV/CVs are sent a bias signal to open them fully while the controlling signal is directed to the TV/MSV which controls steam flow using the internal bypass valve

Transfer from full arc to partial arc admission is done by removing the opening bias signal from the GVs/CVs until they are closed to the point where they are controlling turbine speed or load The opening bias is then applied to the TVS/MSVs to open them fully The transfer process can also go from partial arc to full arc, however, this transfer is seldom done because there is seldom an operational need

Another feature that many EHC turbines have is first stage pressure feedback (GE nomenclature) or impulse pressure feedback (Westinghouse nomenclature) In most units with this feature the operator can place into or out of service depending

372

upon operational needs The reason this feature is used is to provide the turbine controls with a signal that is a good indication of the turbine load The first stage (or impulse chamber) pressure is directly proportional to the load of the turbine Without stage pressure feedback, the turbine load may be considerably different from the load setpoint since the turbine controls only "know about" turbine speed and valve position Thus, for example, if main steam pressure were to fall the turbine load would also fall, and the turbine controls would not respond

Stage pressure feedback automatically generates a stage pressure setpoint that is the stage pressure that should occur for any given valve position, assuming that there is rated pressure at the TVS/MSV inlet If there is a deviation of actual stage pressure from that setpoint, an error signal is generated The stage pressure error signal is an input to the load control unit that helps position the main steam valves

If the main steam pressure falls while the stage pressure feedback is in service, a stage pressure error signal is generated to open the main steam valves to restore stage pressure and thus turbine load There are other situations that can cause turbine load to be different than the setpoint Among these are GV/CV testing The GVs/CVs are tested by applying a closing bias signal to the valve being tested The turbine load falls as a result, unless stage pressure feedback is in service Stage pressure feedback is desirable while testing GVs/CVs to minimize the variation in load and thus the upset to the operation of the plant (especially the boiler or HRSG) and the electrical distribution system

Flow Control

The flow control unit is made up of individual control loops for each of the controlling main steam valves The valve positioning signal from the load control unit is used in each control loop to generate the current signal that goes to the servo valve to position the main steam valve **Figure 3-92** illustrates a typical valve positioning control loop that uses an LVDT, servo valve and main steam valve hydraulic operator

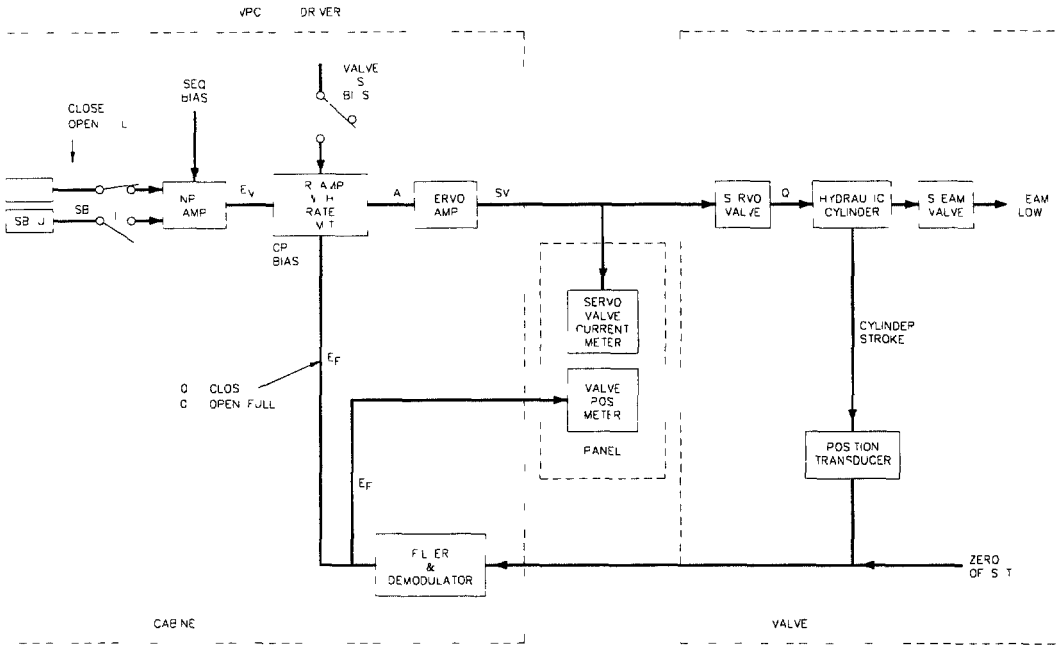

Figure 3-92 Typical GE EHC Flow Control Diagram

214

The load control electronic circuit that compares the valve positioning signal from the load control unit with the actual valve position signal from the LVDT The electronic circuit that generates the valve position signal from the LVDT is called the filter and demodulator When there is a change in the valve position signal from the load control unit, the difference between the load control position signal and the actual valve position signal from the LVDT produces an error signal that is amplified and used to produce a current signal that moves the valve to the desired position The valve reaches the new position, the load control position signal and the actual position signal from the LVDT are the same so the error signal goes to zero and the valve stops at the desired position

Provisions for testing the main steam valves are built into the flow control unit Main steam valves are tested by exercising them through their entire stroke by closing them When a main steam valve is tested, a closing bias signal is applied at the valve's flow control loop to overcome the normal positioning signal from the load control unit When the valve test is completed, the closing bias is removed and the valve returns to the position determined by the load control unit

Standby Control

GE EHC MK II systems have a feature that illustrates the flexibility of EHC The standby control unit can be used to generate valve position signals that are sent directly to the flow control unit, bypassing the speed and load control units The signal from the standby control unit is input directly by the operator The purpose of the standby control unit is to allow maintenance on the speed and load control units while the turbine is in service This feature can improve the overall reliability of the turbine since minor EHC problems that would otherwise require an outage for repair can be corrected on-line

3 9 11 Example Digital EHC System

Digital EHC systems generally have the same functions and features that analog EHC systems have except that they are implemented in software rather than electronic components like transistors and diodes The organization of the control system is, therefore, very similar to that of the analog EHC

There are three different approaches when designing digital EHC systems The earliest approach was to use "hard controls" consisting of pushbuttons, switches, and indicating lights The turbine EHC in this type of system are usually provided on a single panel that is located in the control room on a bench board This is similar to the analog EHC controls

Newer digital EHC systems use a dedicated computer, located in the central control room, to monitor and control the turbine Functions such as changing setpoints and placing various features such as stage pressure feedback in and out of service are done though a keyboard or computer pointing device like a mouse or trackball

Some of the newest digital EHC systems have been integrated into the plant DCS One of the most common examples of this arrangement is found in plants with a Westinghouse turbine and WDPF (Westinghouse Distributed Processing Family) DCS systems The turbine EHC and DCS have common hardware and so the integration of the systems is relatively straightforward as compared to plants where the turbine controls and the DCS are provided by different vendors The following describes a Westinghouse DEH (Digital Electrohydraulic) control system as an example of such a system The system described has the following features

- The user interface for the Westinghouse DEH is a touch screen computer monitor

- The steam turbine is installed in a combined cycle plant with a two pressure HRSG LP steam from the HRSG is admitted to the turbine through induction valves

- There is a separate "hard panel" for critical control functions in addition to the computer interface

- The plant is equipped with both high pressure and low pressure turbine bypasses that allow high pressure and low pressure steam from the HRSG to pass directly to the condenser

376

DEH Control and Indication

The DEH system is controlled in general using the DCS touch screen The mechanics of the touch screen operation are basically the same as for any WDPF system There are a number of pre-programmed graphic pages, each of which is generally dedicated to a particular function or area of control The following is a listing of the available pages

- UNIT OVERVIEW
- FEEDBACK STATUS DISPLAY
- CONTROL MODE
- VALVE MODE
- CONTROL SETPOINT
- SET LIMITER
- INDUCTION/DESUPERHEAT MODE
- BYPASS SETPOINT
- VALVE TEST/DISPLAY
- HYDROGEN SYSTEM
- TSI/BRG METAL TEMPS
- CONTROL START TEMPS
- SEAL OIL SYSTEM
- REACTIVE CAPABILITY
- EXCITER TEMPS
- PRESTART CHECKLIST PG 1
- PRESTART CHECKLIST PG 2
- PRESYNCH CHECKLIST
- GENERATOR TEMPERATURES
- TURBINE ROLL
- WATER DETECT TEMP
- GENERATOR ANNUNCIATOR
- TRIP SYSTEM STATUS
- TRIP SYSTEM TEST

There is also a "hard" control panels mounted in the control room The TURBINE MANUAL PANEL which is illustrated in **Figure 3-93** It is mounted in the control room the bench board and provides the operator with both indications and control The indications show turbine speed or (after the main generator breaker is closed) load, and indications such as whether the turbine is latched The controls are principally for operation of the DEH in the MANUAL mode in that there are increase and decrease pushbuttons for the GVs, TVS, HP bypass stop and control valves (called the MAIN BYPASS CONTROL VALVE, MBCV and MAIN BYPASS STOP VALVE, MBSV) and the LP bypass control valve (called the INDUCTION BYPASS CONTROL VALVE, IBCV) This panel also has a key control switch for the OPC (Overspeed Protection Controller) with three positions

- OPC TEST - Energizes the OPC (Overspeed Protection Control, described in detail later in this Section) solenoid valves to trip the GVs closed If the ICV were open, this valve would be tripped closed as well, however the OPC test function is inhibited after the main generator breaker is closed to prevent this test from being done on line (which would probably trip the boiler) The ICV is also interlocked so that it does not open until the unit is at 20% of rated load

- NORMAL - Arms the OPC features to operate normally

- OPC DISABLE - disables the OPC

Main Steam Valve Servo Motors

The interface between the DEH electronics and the main steam valves is the servo valve and the LVDT Each controlling main steam valve has a servo valve that positions the servo motor and thus the main steam valve(s) in response to a demand signal from the EHC electronics The LVDT provides a position feedback signal to the EHC electronics When the actual position of the valve is the same as the desired position of the valve, the signal from the EHC electronics to the servo valve leave it in a "neutral position "

378

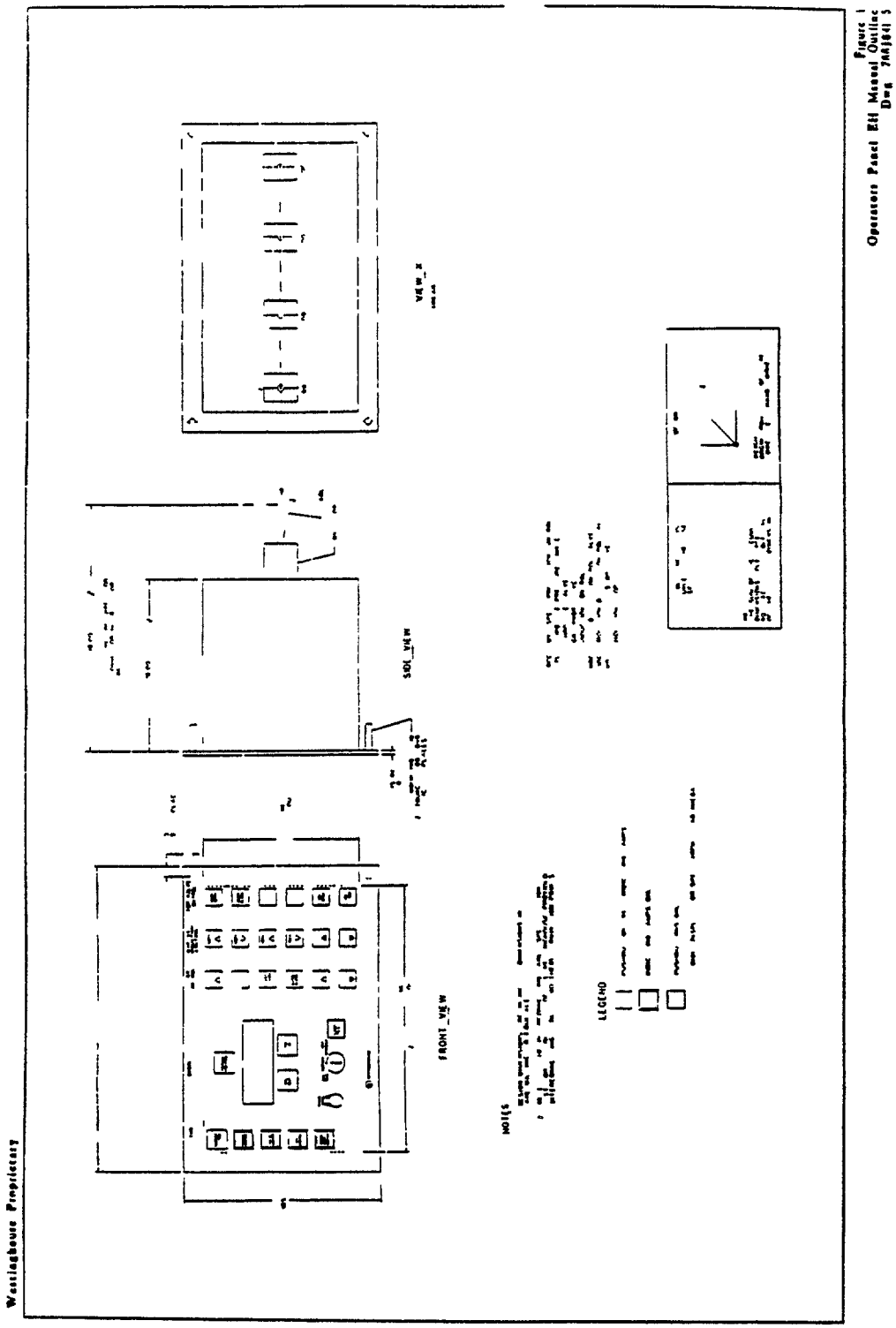

Figure 3-93 Typical Westinghouse DEH Panel

379

Governor and Throttle Valve Control

The turbine can be operated in either throttle valve control or governor valve control (full arc or partial arc control) The turbine is normally rolled off of turning gear with the governor valves wide open and the throttle valves controlling steam flow using the internal pilot valves When the turbine reaches rated speed control is normally switched to governor valve control When this transfer of control takes place, the governor valves are first closed until they begin to throttle steam flow (this reduces the pressure differential across the throttle valves disks) and then the TVS are fully open The DEH system manages the transfer of control from the GVs to the TVS

Induction Steam Valve Control

The induction steam valves are closed during the initial startup They can be opened after the steam turbine reaches 20% of rated load The ISV is then opened fully (provided that its permissives are met) and the ICV opens to modulate induction steam flow The permissives to open the ISV are

- Induction control is in automatic
- The main generator breaker is closed
- Turbine load is greater than 20% of rated
- The DEH is not in manual control
- The unit is latched (reset)
- There is no OPC action in progress

Permissives for the opening of the ISV are as follows

- The ISV is fully open
- The temperature differential between the induction steam in the turbine and the inlet line are within 150°F of one another (to limit thermal stress)
- The steam pressure in the turbine at the induction steam port is 5 psig or more less than the induction steam header pressure (to assure that there is not backflow into the HRSG or disturbance of flow in the turbine steam path

340

- The temperature differential between the induction steam in the turbine at the induction steam port is within 75°F of the induction inlet header (to limit thermal stress)

Once the ICV is open, the opening permissives no longer apply The ICV is modulated by the carryover steam pressure controller The carryover steam pressure controller maintains the induction steam pressure so that the pressure is always just above the saturation pressure for the induction steam temperature in order to avoid introduction of wet steam into the turbine

The ICV may be closed automatically by any of the following conditions

- Flow through the turbine upstream of the induction steam port is greater than minimum allowable
- Turbine load falls below 20% of rated
- An OPC action occurs

Bypass Valve Control

The DEH system controls the HP and LP bypass systems as well as the turbine main steam valves As with the main steam valves, the bypass valve servo motors are served by the EHC hydraulic system and servo valves are used for modulation of the valves (except the HP bypass stop valve which does not modulate) The servo motors for the bypass valves differ from the main steam valve servo motors in that they are not connected to the auto stop trip header This is because the valves should open on a turbine trip

The HP bypass also has a desuperheating spray that is used to control the temperature of the steam flowing into the condenser The desuperheating station is controlled by the DEH system as well

In normal startup of the plant, the HP bypass valves are closed until a vacuum is pulled in the condenser and minimum HP steam pressure has been achieved in the HP drum There are two HP bypass valves, a stop valve upstream and a control valve downstream The HP bypass stop valve is closed whenever the condenser trips or

the HP bypass control valve has been closed for more than one minute It opens whenever the opening signal to the HP bypass control valve is greater than 1% or there is a turbine trip

During startup the HP bypass control valve is then opened and modulated to maintain HP steam pressure according to a predetermined startup profile When the minimum steam pressure for turbine latchup is reached, the turbine is reset and rolled using the main steam valves for control of turbine speed The HP bypass is modulated during the startup to maintain a certain HP steam pressure at the TVS After the generator is synchronized, the HP bypass pressure setpoint is increased to cause the HP bypass valve to close and makes steam available for the turbine At that point the turbine main steam valves are then used to modulate the HP steam pressure The steam pressure is maintained just above the saturation pressure for the HP steam temperature in order to avoid introduction of wet steam into the turbine

In normal operation the HP bypass pressure setpoint remains set at a high value so that the HP bypass valves can act to reduce the HP pressure in the event of a high HP steam pressure transient (as would be caused by a sudden load reduction) In the event of a load rejection the HP bypass setpoint is returned to the appropriate value for full speed, no load operation and the main steam valves reverts to speed control

As is mentioned above, there is a desuperheating spray for the HP bypass The spray water valve for this spray is also controlled by the DEH system, although the valve actuator is not an electrohydraulic operator like the main steam and bypass valves The DEH positions the spray valve in two stages In the first stage, a calculation of the spray flow required to maintain the desired temperature is done based on the expected HP bypass steam flow In the second stage, a temperature control loop modulates the valve to maintain the steam temperature at the setpoint

The discussion so far has applied to the HP bypass The operation of the LP bypass is the same as that for the HP bypass with the following exceptions

- There is no LP bypass stop valve
- There is no desuperheating station
- The LP bypass controls LP steam pressure until the turbine reaches at least 20% of rated load

386

The normal mode of operation for the HP and LP bypass valves is in the automatic mode The operator can also control the HP and LP bypass control valves manually through the DEH manual panel

The HP bypass stop and control and LP bypass control valves can be tested by moving the valves through their strokes The valves must be closed to initiate a test and are opened fully during the test

DEH Manual Control

As is mentioned earlier in this Section, the DEH may be operated in the MANUAL mode The operator controls the turbine from the DEH manual panel in this mode The manual mode may be selected by the operator by depressing the MANUAL pushbutton on the panel or control may automatically be changed to MANUAL in the event of DEH some malfunctions

While in the MANUAL mode, the positions of the main steam and bypass valves directly from the DEH manual panel in this mode of operation It may be thought of as an "open loop" control mode Each valve or set of valves (there is only one pushbutton for the two TVS and one for the four GVs) that can be modulated has a Δ (raise) and ∇ (lower) pushbutton on the DEH manual panel The ISV and MBSV have pushbuttons for opening (ISV OPER and MBSV OPER) and closing (ISV CLOSE and MBSV CLOSE)

When the DEH is placed into the MANUAL mode the main steam and bypass valves move as long as the operator holds down the Δ (raise) and ∇ (lower) pushbutton at a rate that moves the valve through its full stroke in 20 minutes There is a FAST ACTION pushbutton on the manual control panel which, when held depressed at the same time that the valve Δ (raise) or ∇ (lower) pushbutton is held down increases the rate of valve movement so such that it moves the valve through its full stroke in 3 minutes Finally, there is a RAPID CLOSE pushbutton that functions only when held depressed with the ∇ (lower) pushbuttons for the steam valves and moves the valve at a rate that would bring it from fully open to fully closed in 30 seconds

The MANUAL mode is intended for emergency operation only When it is necessary for the MANUAL mode to be used great caution must be exercised since the normal safeguards that are built into the DEH system are not functional The normal speed for opening and closing of the valves, is intended for fine adjustment The FAST ACTION should be used with extra caution because with increased speed in opening and closing of valves severe transients can be produced that could trip the plant That caution obviously applies with even greater strength for the RAPID CLOSE feature

DEH Control Loops

When the DEH system is in normal operation (OPER AUTO, AUTO SYNCH, ATC or REMOTE) the signals to the main steam valves are generated by combining the signals from several control loops These include the following

- Speed control - This loop compares the actual speed with the speed setpoint and generates a signal to correct any difference between the two The speed control loop is in service even when the generator is synchronized This means that when there are changes in system frequency (which are reflected as small changes in speed) the DEH system responds by closing when the system frequency to restore speed Conversely when the system frequency falls the GVs are opened to restore speed This phenomenon is called regulation and is responsible for load sharing between different units operating in the same system

- Load control - This loop compares the actual load with the load setpoint and generates a signal to correct any difference between the two

- Impulse pressure (first stage pressure) feedback - The DEH system normally positions the main steam valves to produce a given load based upon a certain valve position with the assumption that there is a given pressure at the throttle valves In the event that there are problems or abnormal modes of operation such as valve tests the actual load may be different from that desired

The actual pressure varies directly as a function of load It is possible, therefore, to determine what the impulse pressure should be for any given load When the impulse pressure feed back is in service the actual impulse pressure is compared with the desired pressure and the difference is used to generate a signal that is added to the load control signal to properly position the main steam valves

- Throttle Pressure Limiter (TPL) - The throttle pressure regulator protects the turbine from water carryover from the HRSG Typically boiler upsets that result in water carryover to the turbine are accompanied by a drop in throttle pressure The throttle pressure regulator compares the actual throttle pressure with a limit and begins to close the throttle valves in the event that the throttle pressure falls below that limit Closing the governor valves helps to maintain the boiler pressure and thus reduces the likelihood that there is water carryover

  The setpoint for the throttle pressure limiter can be set either by the operator, or the setpoint can be set "remotely " "Remote" operation in this context means that the setpoint is set by the balance of plant controls This is necessary in the sliding pressure mode since the throttle pressure changes to change load If there were a fixed setpoint in this mode of operation, the setpoint would either have to be set so high that it would not be useful or so low that the setpoint would interfere with the control of the unit

  It should be noted that the TPL is not described as a control loop as such by Westinghouse, but rather a limit like the HLL or VPL The controls for the TPL in the DCS are on the same page (SET LIMITER) with the HLL, LLL and VPL (which are described below) In fact, the TPL differs from those limiting features because the TPL is variable and in fact the valve position is modulated, not fixed as with the other limiting features

385

For both the speed and load control loops (all of these loops appear on the CONTROL SETPOINT page), the operator can enter targets and rates for the load and speed After the targets are entered, the operator selects GO and the DEH system generates a SETPOINT that changes at the rate entered by the operator Eventually the SETPOINT equals the TARGET

DEH Limits

The DEH system three limits

- Valve Position Limit (VPL) - The valve position limit imposes an upper limit on the position of the governor valve The limit is expressed in terms of percent of full travel The VPL can be varied by the operator from 0% to 120%

- High Load Limit (HLL) - The high load limit imposes a high limit on unit load

- Low Load Limit (LLL) - The low load limit imposes a low limit on unit load

Automatic Synchronizer

The turbine is equipped with an automatic synchronizing device This is an electronic device that is separate from the DEH system When it is placed in service (after the turbine has reached rated speed) it varies the speed of the turbine ±50 rpm until the conditions for synchronization are satisfied When those conditions are satisfied, the main generator breaker is closed automatically The turbine speed is varied by the automatic synchronizer by providing signals to the speed control loop to change the target speed

Automatic Turbine Control

The Automatic Turbine Control (ATC) provides the operator with the means to completely automate the turbine startup The ATC is essentially a computer program that, based upon the state of the plant, the turbine auxiliary status, and the steam temperatures can act through the DEH to roll the turbine off turning gear and load the

unit automatically The ATC will not roll the turbine until all required permissives are met Permissives are divided into critical and non-critical The operator can over-ride the non-critical parameters to allow the ATC to start the turbine even though the non-critical permissive is not satisfied

During acceleration of the unit parameters like eccentricity and vibration are monitored In the event of high eccentricity (below 600 rpm) and or high vibration, the ATC may interrupt the acceleration of the unit, decrease turbine speed, or trip the unit

The ATC calculates turbine stress and determines what acceleration, loading rates, speed and load holds are required and their duration In many cases, the length of these hold can be reduced as compared to strict adherence to the SALI charts since no conservative assumptions (which are implicit in the SALI) need be made. Transfer from TV to GV control is also initiated and completed by the ATC at the appropriate speed during startup Upon reaching rated speed the ATC can synchronize the unit using the automatic synchronizer

After the unit has been started and loaded, the ATC can remain in service to make load changes Once again, it automatically calculates turbine stress and determines the appropriate rate of change of load based upon a fixed valve of the fatigue index, 10,000 cycle life The operator can select HIGH LOAD RATE which has the effect of changing the fatigue index to 4,500 cycle life

The ATC is also capable of operation in an "advisory mode " In this mode the same parameters regarding thermal stress are calculated, however there is no control action, the results are displayed by the operator as a guide to operations A particularly useful calculated parameter that can be displayed is the expected differential expansion

The ATC also monitors various generator parameters such as hydrogen temperatures These parameters can cause the ATC to hold a startup

3 9 12 Emergency Trip System

The function of the emergency trip system is to provide alarms to alert the operator to abnormal conditions when they first develop and to trip the turbine if those conditions exceed safe parameters This system consists of a number of different devices In the event of a trip these devices provide signals to trip the main steam valves closed The following parameters are monitored and can trip the turbine

- Overspeed
- Thrust bearing wear
- Low bearing oil pressure
- Low condenser vacuum
- Low EHC hydraulic fluid pressure

Emergency Trip System Principles

The emergency trip system, shown schematically in **Figure 3-94**, is designed to protect the turbine from unsafe operating conditions that would result in damage It is also designed for reliability through testing and protection from false trips due the failure of a single component

All protective devices degrade over time and so become less reliable One reason of this degradation is lack of exercise, a component that remains in one state for long periods of time degrades faster than one that is exercised periodically This is a particular problem in turbines designed for power generation because the turbine may remain in service for months at time Thus it is difficult to exercise a device which normally trips the turbine without taking the unit off the line

One way this problem is addressed in the emergency trip system is to use two trip channels The same tripping condition must be seen by both trip channels in order to trip the turbine The use of two trip channels also provides for testability since in each case there are two sensing elements, one in each channel, and one can be tested without tripping the turbine

365

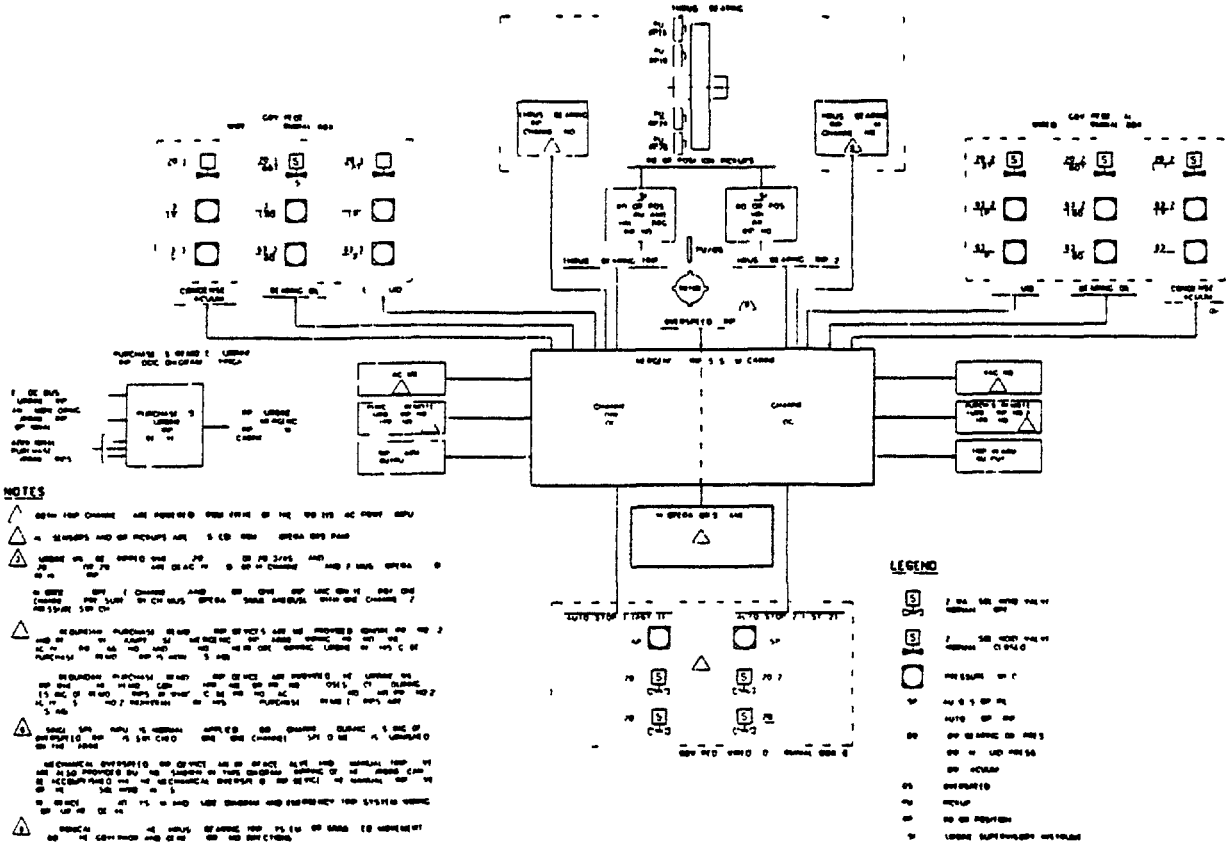

Figure 3-94 Typical Westinghouse DEH Trip System Diagram

387

The trip and test circuitry is arranged in such a way as to allow the channel that is being tested to be isolated from the other channel and from the trip bus This allows the sensing device and channel to be tested without tripping the turbine During the test, the channel not being tested still functions normally This means that if the parameter for the device being tested were to change to an unsafe value both channels would trip and the turbine would trip Thus here is no loss of protection during the testing

There are three trips which have a mechanical backup The trip devices for these mechanical trips are installed in a box at the side of the governor pedestal These trips are

- Low bearing oil pressure
- Low vacuum
- Thrust wear

Emergency Trip System Flow Paths

There are three flow paths associated with the emergency trip system, two in the EHC hydraulic system and one in the lube oil system An diaphragm interface valve serves as the interface between the lube oil system and the EHC hydraulic system

EHC Hydraulic System OPC Header

The EHC system has a feature called the Overspeed Protection Controller (OPC) This feature consists of the sensing devices, electronic circuitry and solenoid valves necessary to trip the GVs and ISV closed when there is an overspeed event

The dump valve pressure sensing lines for the GV and ICV servo motors are connected to the OPC header Two solenoid valves are also connected to the OPC header These solenoid valves are closed in normal operation and both open to the pressurized drain, thus if either of them open the OPC header is ported to drain The OPC circuitry opens these solenoid valves, dumping the OPC header pressure to drain, in the event that the main generator breaker opens while the turbine is carrying significant load This causes the dump valves for the GV and ICV servo motors to

470

open and trip the valves closed If the peak speed of the turbine is below the mechanical overspeed trip setpoint, the OPC will close the solenoid valves and the GV and ICV will reopen automatically Two OPC solenoid valves are used to increase the reliability of the OPC function

EHC Hydraulic System Auto Stop Emergency Trip Header

The dump valve pressure sensing lines for the TV and ISV servo motors are connected to the auto stop emergency trip header There are also two pairs of diaphragm dump valves are also connected to the OPC header, each pair is in a trip channel The valves are arranged so that one dump valve in the first channel is in series with one dump valve in the second channel Thus, both valves, one in each channel, must open to dump auto stop emergency trip header pressure to drain This allows for testing, one channel can be tested without losing trip protection

The dump valves are positioned by diaphragm operators which use hydraulic fluid which is admitted to the diaphragms to close the dump valves There are solenoid valves connected at the hydraulic fluid connections to the diaphragms When the turbine is reset, these solenoid valves are closed When the turbine is tripped, the solenoid valves are opened and the pressure in the dump valve diaphragms is ported to drain, opening the dump valves and dumping auto stop emergency trip header pressure to the pressurized drain, this trips the TVS and ISV closed

The interface diaphragm valve is also connected to the auto stop emergency trip header It is held closed by lube oil pressure from the lube oil auto stop header When the turbine is tripped the lube oil auto stop header pressure is dumped to drain and the diaphragm interface valve opens This dumps the auto stop emergency trip header pressure to drain and trips the TVS and ISV closed

Lube Oil System Auto Stop Oil Header

The interface diaphragm valve's diaphragm uses lube oil from the lube oil auto stop oil header to close the valve The lube oil auto stop oil header is pressurized by high pressure oil from the MOP or the SOBP at about 300 psig through an orifice

351

The overspeed trip valve is connected to the lube oil auto stop oil header As long as the turbine is reset (latched up), the header is pressurized If the valve is tripped open, the header pressure is dumped to drain This opens the diaphragm interface valve, depressurized the EHC auto stop emergency trip header and thus trips the TVS and ISV closed

Emergency Trip System Components

There are a number of different elements of the trip system This Section addresses each of the various components

Mechanical Overspeed Trip

The mechanical overspeed trip provides a trip signal to close the main steam valves in the event of a turbine overspeed incident The mechanical overspeed trip, shown schematically in **Figure 3-95**, is a bolt which slides into a hole in the turbine rotor that is perpendicular to the axis of the turbine rotor (or secondary shaft for the secondary emergency overspeed governor) In normal operation the center of gravity of the bolt is displaced from the center of rotation of the shaft so that when the shaft is spinning there is a centrifugal force on the bolt that tends to make it fly out of the hole in the shaft The bolt is prevented from flying out of the hole in normal operation by a spring that is strong enough to overcome the centrifugal force a speeds below the trip speed

As the turbine increases speed, however, the centrifugal force increases When the turbine reaches the trip speed, the centrifugal force overcomes the spring force and the bolt flies out of the hole until stopped by a shoulder on the bolt The bolt hits the finger of a trip valve when this occurs, the action of the trip valve (discussed in the next section) trips the main steam valves closed The tension of the spring that holds the bolt in the reset position is adjustable and thus the trip setpoint for the governor can be adjusted The mechanical overspeed trip is mounted in the end of a stub shaft that is bolted on the turbine end of the turbine rotor in the governor pedestal The mechanical overspeed trip is adjusted to trip at a nominal turbine speed of 3960 rpm (110% of rated speed)

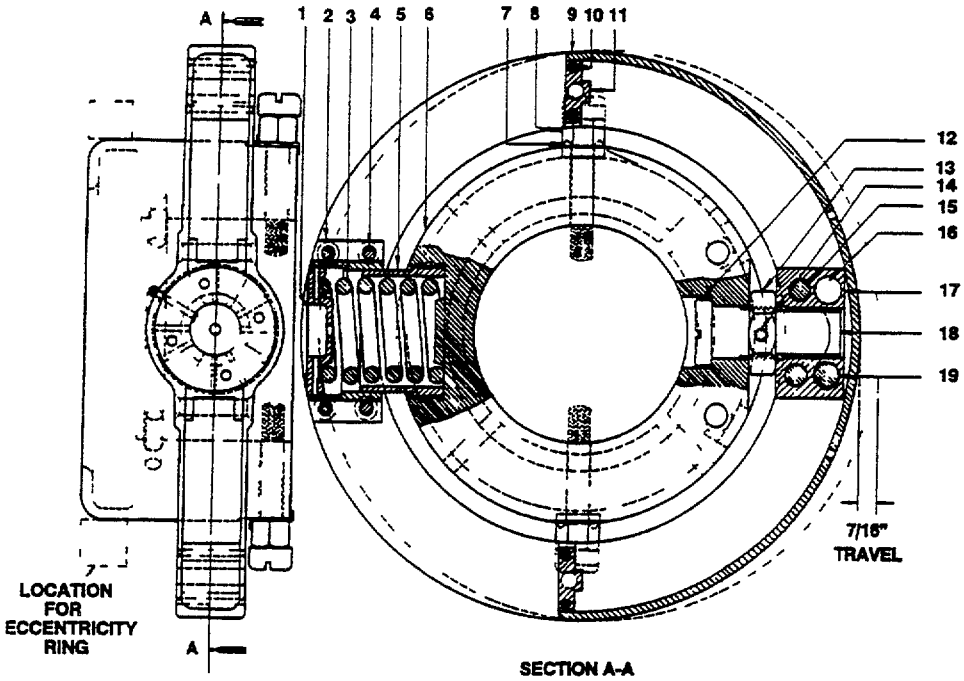

Figure 3-95 Typical Emergency Overpseed Governor

Accuracy and reliability in the emergency trip system are very important to the safe operation of the turbine, and no other device is as important in that safe operation than the mechanical overspeed trip In order to address these issues, the mechanical overspeed trip should be tested by exercising it regularly by tripping It is not practical to trip the mechanical overspeed trip by actual overspeed of the turbine since this would require that the unit be unloaded and the main generator breaker opened Accordingly, a feature has been designed into the system to allow the mechanical overspeed trip to be tested while the turbine is at synchronous speed, this feature is called the oil trip

The oil trip has two elements The first element is the overspeed bolt itself which fits tightly in it's hole in the shaft There is an oil passage that communicates with the area under the bolt When oil pressure is admitted to this area, the hydraulic force produced, together with the centrifugal force that already exists, overcomes the spring force on the overspeed bolt and trips the bolt The oil passage to the area under the overspeed bolt comes out of the end of the turbine rotor in the center

The second element in the oil trip is a nozzle which is mounted in the front standard so that a jet of oil can be directed into the passage in the end of the turbine rotor A manually operated test valve at the governor pedestal can be opened to admit oil to the nozzle and thus to generate the oil jet The oil jet enters the passage in the end of the turbine rotor and creates hydrostatic force beneath the weights of the overspeed protective devices The hydrostatic force provides enough additional force, along with the centrifugal force, to overcome the spring force and to cause the weight to snap out at rated speed When the test valve is closed, the oil leaks out and the hydraulic force disappears The spring tension in the overspeed trip is then sufficient to pull the overspeed bolt back into the reset position

Normally, tripping the overspeed trip would result in tripping of the turbine The emergency trip system is equipped with a test valve in the overspeed trip relay to make this test possible on-line without tripping the turbine

The overspeed trip valve trips open in response to signals from either of the mechanical overspeed trip or a manual trip handle at the front standard The lube oil auto stop oil header pressure decreases and quickly closes the main steam valves

It also provides the means for testing the overspeed protection mechanisms and protective device while the unit is in service without tripping the turbine

The overspeed trip valve is mounted beneath the mechanical overspeed trip in the governor pedestal It consists of an overspeed trip valve, a trip piston and a trip latch The overspeed trip valve is positioned by the trip and reset lever which can be operated by either of the two overspeed trip mechanisms or the manual trip handle linkage

The trip piston controls the autostop oil pressure When it is pushed to the left in **Figure 3-96** the trip piston seals a drain in the autostop oil line and allows autostop oil pressure to build up to its normal value When the trip piston moves to the right, it opens the autostop drain, releasing autostop oil pressure and thus tripping the main steam valves

The turbine is equipped with a lockout valve that works in conjunction with the trip valve to allow the mechanical overspeed trip to be tested with the turbine in operation without tripping the turbine The lockout valve allows the overspeed trip valve to move to the tripped position without tripping the trip piston The lockout valve is normally held in the open position (to the right) by a spring attached to the test valve handle that is in turn connected to the lockout valve spool

When the test handle is pulled out against the spring (moving the lockout valve spool to the left), the lube oil auto stop oil header remains pressurized even though the trip valve is tripped open This allows the mechanical overspeed trip to be tested without tripping the turbine

The trip-reset lever and test lever are at the governor pedestal as shown in **Figure 3-97** The test valve can only be operated locally at the front standard The reset mechanism can be operated remotely from the control room A single acting air servo motor can be operated to push the trip and reset lever into the reset position Air is admitted to the servo motor through a solenoid valve The solenoid valve is normally closed when de-energized When the solenoid valve is energized it opens and admits air to the servo motor The servo motor then pushes the trip and reset lever to the reset position

315

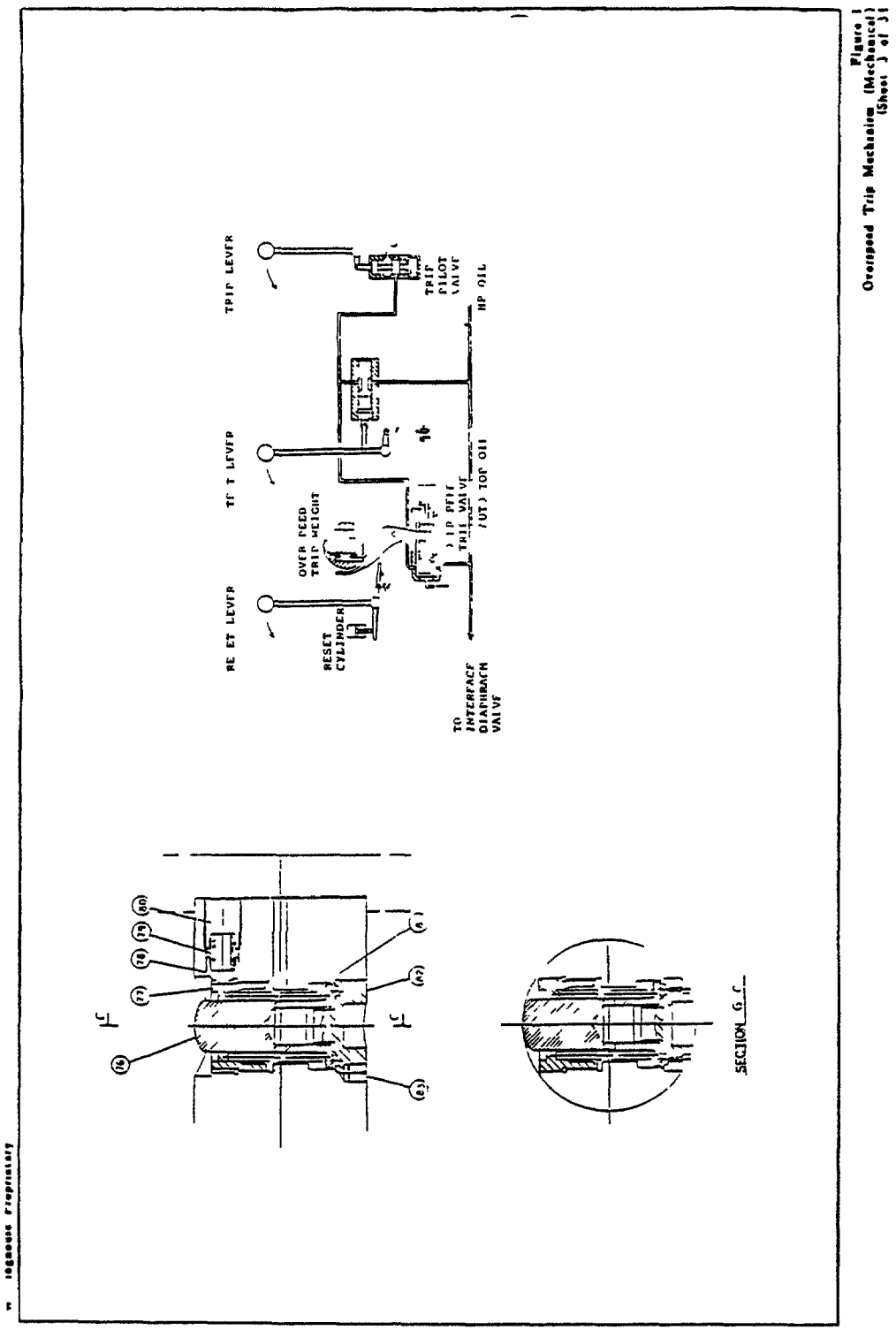

Figure 3-96 Typical Westinghouse Overspeed Trip System Arrangement

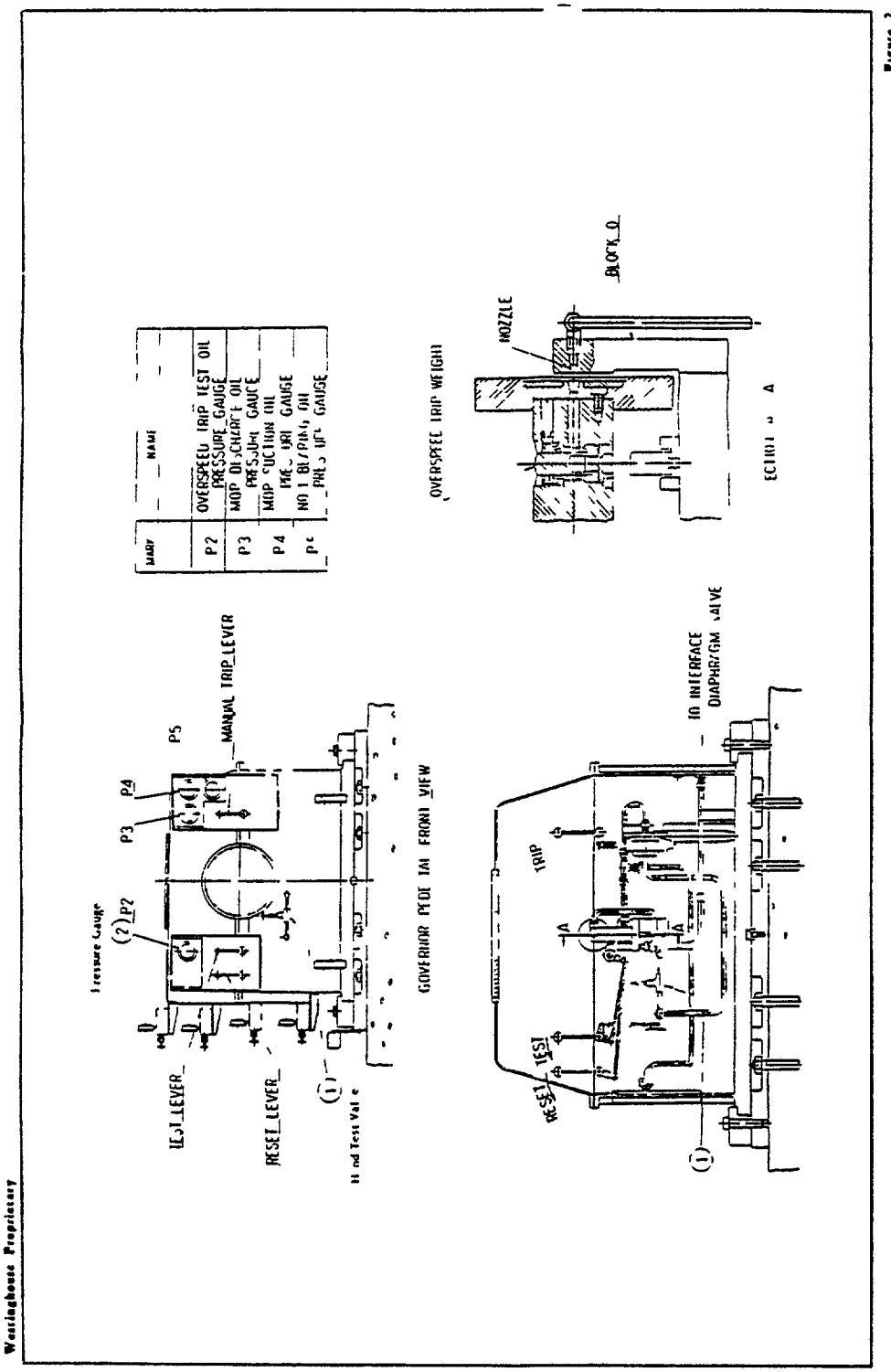

Figure 3-97 Typical Westinghouse Overspeed Trip System Arrangement

397

The overspeed trip valve can be tripped manually at the governor pedestal by moving the trip and reset lever at the front standard to the TRIP position

Electrical Overspeed Trip

The electrical overspeed trip is provided as a backup to the mechanical overspeed trip It senses turbine speed electronically using the toothed wheel and magnetic probes discussed earlier in the Section on TSI It cannot be tested by operators It can be effectively disabled for actual testing of the mechanical overspeed trip This is done by setting the electrical overspeed trip setpoint far above its normal setpoint (to 115% of rated speed) temporarily for the mechanical overspeed trip test

Overspeed Protection Controller

The overspeed protection controller (OPC) is not, strictly speaking, part of the emergency trip system The function of the OPC is to trip the controlling valves (the GVs and if open the ICV) closed in the event of an overspeed event The design of the OPC is such that it closes these valves <u>before</u> the speed of the turbine actually reaches the mechanical overspeed or electrical overspeed trip setpoints The OPC reduces the peak overspeed of the turbine to prevent the turbine from reaching these trip setpoints

The "trip" of the controlling valves in an OPC action is different from a "real trip" because the OPC trip does not "seal in " That is, when the OPC senses conditions that will result in an overspeed, it energizes the OPC solenoid dump valves to trip the controlling valves closed If the peak turbine overspeed is less than the mechanical and electrical overspeed trip setpoints, the OPC solenoid valves are closed automatically, allowing the controlling valves to reopen When either the mechanical or electrical overspeed trips are tripped, the trip is "sealed in," that is the operator must reset the turbine trip system before the turbine can be restarted The design of the OPC is such that a load rejection could occur without tripping the turbine and as a result the turbine would be ready to resynchronize to the system immediately

Condenser Low Vacuum Trip

The function of the condenser low vacuum trip is to protect the turbine from operation under low vacuum conditions that would damage the turbine blades, particularly in the LP turbine It consists of two pressure switches that monitor condenser pressure The sensing lines from the condenser to the pressure switches have orifices in them There are normally closed solenoid operated test valves in the sensing lines to each pressure switch that port the pressure switches to atmosphere when energized to open Opening a test valve causes the pressure switch to trip without affecting the condenser vacuum because of the orifice The test circuitry is arranged so that when the test solenoid valve for one channel is energized for testing, that channel is disabled If low condenser vacuum occurs during the test, the turbine is tripped

Low Bearing Oil Pressure Trip

The function of the low bearing oil pressure trip is to protect the turbine from operation with loss of lube oil It consists of two pressure switches that monitor lube oil header pressure The sensing lines from the lube oil header to the pressure switches have orifices in them There are normally closed solenoid operated test valves in the sensing lines to each pressure switch that port the pressure switches to drain when energized to open This causes the pressure switch to trip without affecting the lube oil header pressure because of the orifice The test circuitry is arranged so that when the test solenoid valve for one channel is energized for testing, that channel is disabled If low lube oil header pressure occurs during the test, the turbine is tripped

Low EHC Hydraulic Fluid Pressure Trip

The function of the low EHC fluid pressure trip is to protect the turbine from operation with loss of EHC hydraulic system pressure It consists of two pressure switches that monitor EHC hydraulic system high pressure header pressure The sensing lines from the EHC high pressure header to the pressure switches have orifices in them There are normally closed solenoid operated test valves in the sensing lines to each pressure switch that port the pressure switches to drain when

energized to open Opening a test valve causes the pressure switch to trip without affecting the EHC high pressure header pressure because of the orifice The test circuitry is arranged so that when the test solenoid valve for one channel is energized for testing, that channel is disabled If low EHC high pressure header pressure occurs during the test the turbine is tripped

Thrust Bearing Wear Trip

The thrust bearing wear trip utilizes the TSI rotor position transducers as inputs to the two trip channels A known signal that simulates excessive rotor movement (and thus excessive thrust bearing wear) is injected into the circuitry for the channel being tested in order to perform the test This causes the tested channel to trip The test circuitry is arranged so that when the rotor position for one channel is being tested, that channel is disabled If rotor position changes excessively during the test the turbine is tripped

Electrical Overspeed Trip

The electrical overspeed trip utilizes a shaft speed pickup like that described in the Section on TSI The single pickup provides inputs to the two trip channels A known signal that simulates overspeed is injected into the circuitry for the channel being tested in order to perform the test This causes the tested channel to trip The test circuitry is arranged so that when the electrical overspeed for one channel is being tested, that channel is disabled If an actual overspeed occurs during the test the turbine is tripped

Remote Trip

The turbine can be tripped remotely by a signal from the turbine trip pushbutton and from signals from outside of the turbine such as cross trips from lockout relays for either the HRSG or the main generator breaker

Emergency Trip System Controls

Tests of the protective system may be carried out by the operator from the control room through the DCS The function and channel to be tested is selected on the DCS SELECT is selected to begin the following test sequence

- The selection white blacklight comes on
- The operator selects the START/OPEN/TRIP pushbutton
- The selected item red blacklight comes on to indicate that the function is being tested
- The trip condition is simulated for the device being tested
- The channel being test trips as indicated by the CHAN NO 1 (or NO 2) TRIPPED light coming on and by the appropriate dump valves opening as indicated by the Trip System Status graphic on the DCS
- The operator then clears the trip condition by depressing the STOP/CLOSE/RESET pushbutton
- In the event that depressing the STOP/CLOSE/RESET pushbutton does not reset the dump valves the first time it may be necessary to depress it again

There is also a manual test panel, shown in **Figure 3-98**, installed on the control room benchboard This panel provides indication of the various trips and the two trip channels It has a LAMP TEST pushbutton and two controls The first control is the RESET TEST TRIPS which allows the operator to manually reset any trip function being tested The second control is a key switch for the electrical overspeed trip with two positions

- IN SERVICE - In this position the electrical overspeed trip setpoint is normal

- INHIBIT - In this position the electrical overspeed trip is set high to 115% of rated speed to allow actual overspeed testing of the mechanical overspeed trip

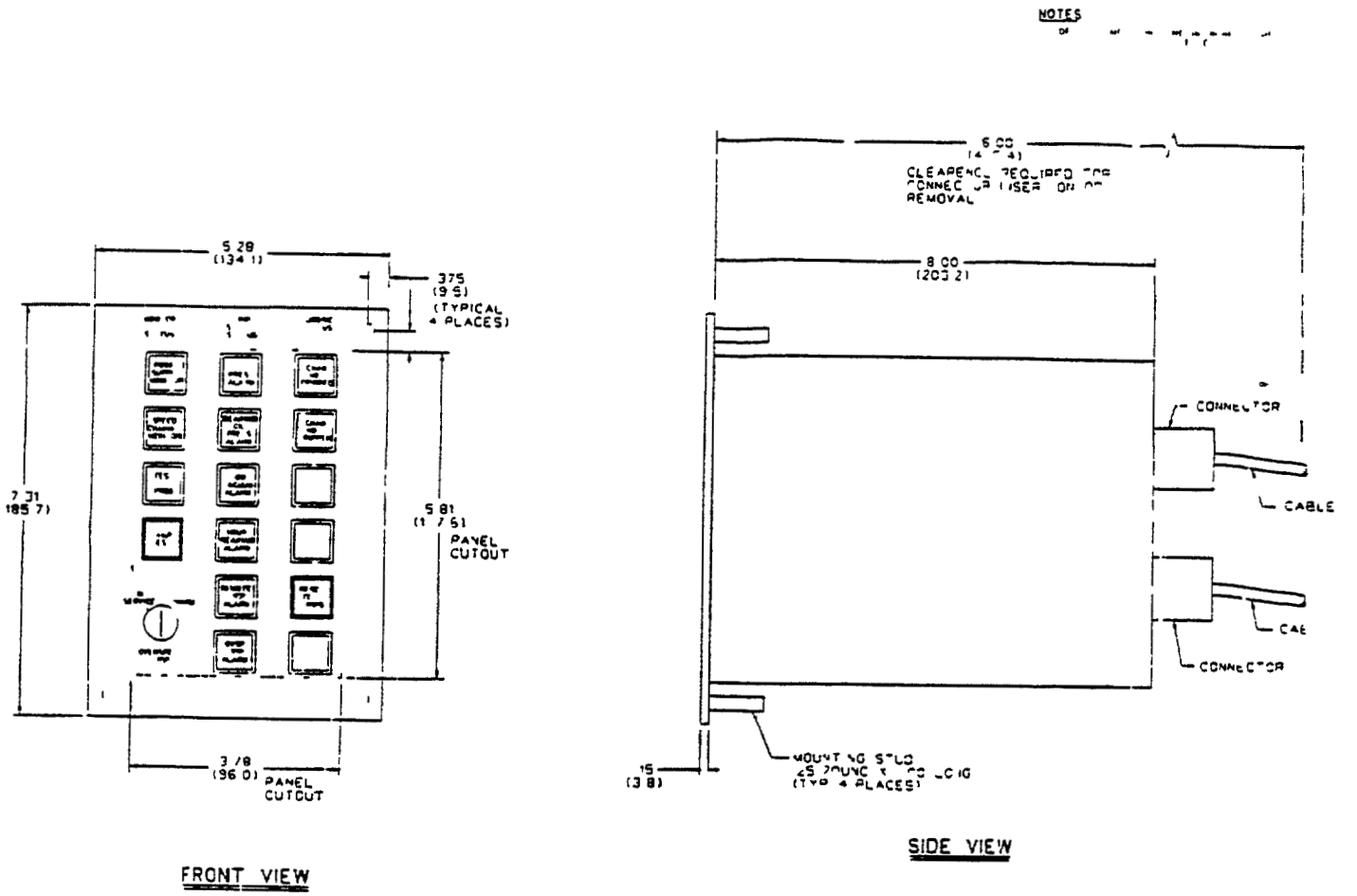

Figure 3-98 Typical Westinghouse DEH Manual Test Panel

Electrical Overspeed Trip

The electrical overspeed trip utilizes a shaft speed pickup like that described in the Section on TSI The single pickup provides inputs to the two trip channels A known signal that simulates overspeed is injected into the circuitry for the channel being tested in order to perform the test Th s causes the tested channel to trip The test circuitry is arranged so that when the electrical overspeed for one channel is being tested, that channel is disabled If an actual overspeed occurs during the test the turbine is tripped

Remote Trip

The turbine can be tripped remotely by a signal from the turbine trip pushbutton and from signals from outside of the turbine such as cross trips from lockout relays for either the HRSG or the main generator breaker

Emergency Trip System Controls

Tests of the protective system may be carried out by the operator from the control room through the DCS The function and channel to be tested is selected on the DCS SELECT is selected to begin the following test sequence

- The selection white blacklight comes on
- The operator selects the START/OPEN/TRIP pushbutton
- The selected item red blacklight comes on to indicate that the function is being tested
- The trip condition is simulated for the device being tested
- The channel being test trips as indicated by the CHAN NO 1 (or NO 2) TRIPPED light coming on and by the appropriate dump valves opening as indicated by the Trip System Status graphic on the DCS
- The operator then clears the trip condition by depressing the STOP/CLOSE/RESET pushbutton
- In the event that depressing the STOP/CLOSE/RESET pushbutton does not reset the dump valves the first time it may be necessary to depress it again

There is also a manual test panel, shown in **Figure 3-98**, installed on the control room benchboard This panel provides indication of the various trips and the two trip channels It has a LAMP TEST pushbutton and two controls The first control is the RESET TEST TRIPS which allows the operator to manually reset any trip function being tested The second control is a key switch for the electrical overspeed trip with two positions

- IN SERVICE - In this position the electrical overspeed trip setpoint is normal
- INHIBIT - In this position the electrical overspeed trip is set high to 115% of rated speed to allow actual overspeed testing of the mechanical overspeed trip

3 10 Basic Electrical Theory, the Generator and Exciter

The main generator is the final step in the energy conversion process that occurs in the power plant The exciter is a necessary supporting component for the generator This module reviews the electrical theory of the generator and describes the construction of generators and exciters

3 10 1 Electrical Theory Review

Plant personnel must have a good understanding of the theory of the generator and how it functions in order to understand and operate and maintain it effectively This section reviews that theory

Ohms Law, Electrical Power, and Electrical Heating

heat wears out insulation

Perhaps the greatest operational consideration for any electrical equipment in a power plant is that of generation and dissipation of heat Plant personnel must understand how heat is produced in electrical apparatus to understand the reasons for the equipment design and to operate and maintain it properly This can be understood by considering Ohm's law, and the formulas for electrical power and heating

404

Ohms law is a mathematical statement of the relationship between the three electrical parameters of voltage, current and resistance This is usually written as

$$E = I \times R \quad \text{or} \quad I = E/R$$

Where -

E = Voltage (volts)
I = Current (amps)
R = Resistance (ohms)

Electrical power is the product of the voltage and current in a circuit The formula is

$$P = E \times I$$

Where -

P = Electrical power (watts)
E = Voltage (volts)
I = Current (amps)

Note that for a given amount of electrical power, it is possible to maintain that same power with a lower voltage if the current is increased Also, of course, it is possible to produce the same amount of power with lower current if the voltage is increased

The formula for electrical heating can be derived by combining Ohm's law with the formula for electrical power That is

$$\text{if } P = E \times I \text{ and } E = I \times R \text{ then } P = I^2 \times R$$

The amount of heat produced by electrical current flowing through a conductor is proportional to the square of the current This means that if one were to double the current in a conductor, the amount of heat would increase by a factor of four Therefore, if one had the choice of producing a given amount of power at low voltage with high current or high voltage with low current, less heat would be produced with high voltage and low current For instance, if one were to double the voltage used to

405

roduce a given amount of power the current would be one half as much as before and the amount of heat generated would be one quarter as much

So far in this discussion only direct current (DC) electricity has been discussed Alternating current (AC) electricity is more common in power plants AC electricity is illustrated in **Figure 3-99** The voltage in AC electricity is constantly changing in a pattern called a sine wave Since the voltage is continuously changing in AC electricity, current flow also changes in the same way AC electricity is explored in more detail later in this chapter

3 10 2 Magnetism and Electricity

Magnetism is one the basic forces in the Universe Most people are familiar with magnetism as a force that is produced by a magnet This force is exerted only on magnetic materials, of course The strength of the magnetic field can be described in terms of a concept called lines of flux One can think of a magnetic field as lines of flux that run from the north to the south pole of a bar magnet as shown in **Figure 3-100** While lines of flux are imaginary they are useful as a concept and the best way to illustrate that concept is from the classic elementary school science experiment This experiment is done by sprinkling iron on a piece of paper held close to a magnet The strength of a magnetic field can be thought of in terms of the number of lines of flux per unit area That is the more dense the lines of flux the stronger the magnetic field

There is a relationship between magnetism and electricity It is possible to produce magnetism using electricity This is possible because a magnetic field is produced around any conductor in which current is flowing The strength of the magnetic field can be increased in several ways

One way to increase the strength of the magnetic field is to wrap the conductor (wire) into a coil as shown in **Figure 3-101(a)** so that the magnetic field in each loop reinforces that in the adjacent loops The strength of the magnetic field can be increased still further in two ways for a given coil of wire First, the current in the wire can be increased Increasing the current increases the strength of the magnetic field directly since more electrons flowing through the wire increases the magnetic field in each loop

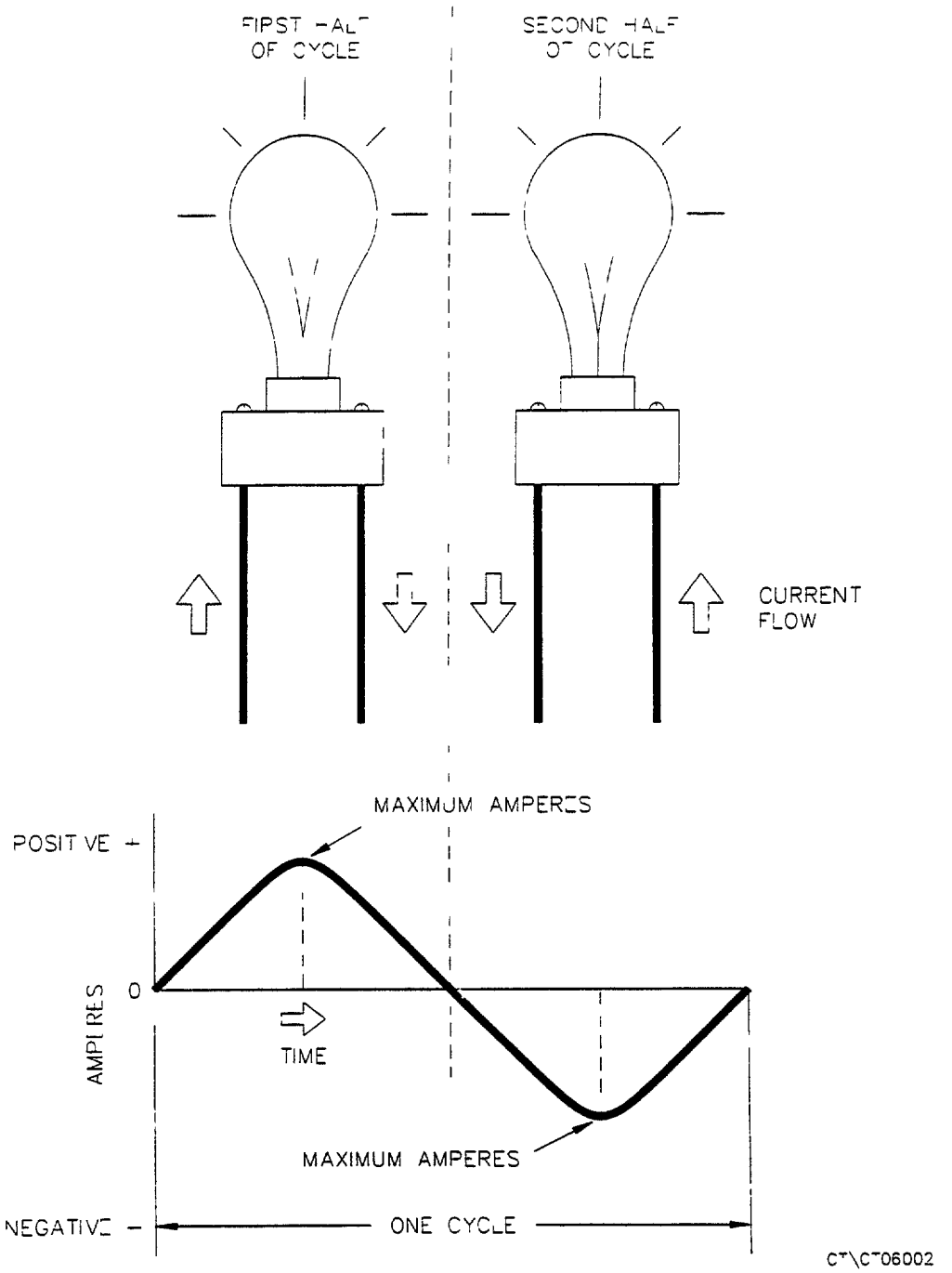

Figure 3-99 Illustration of AC Electricity

407

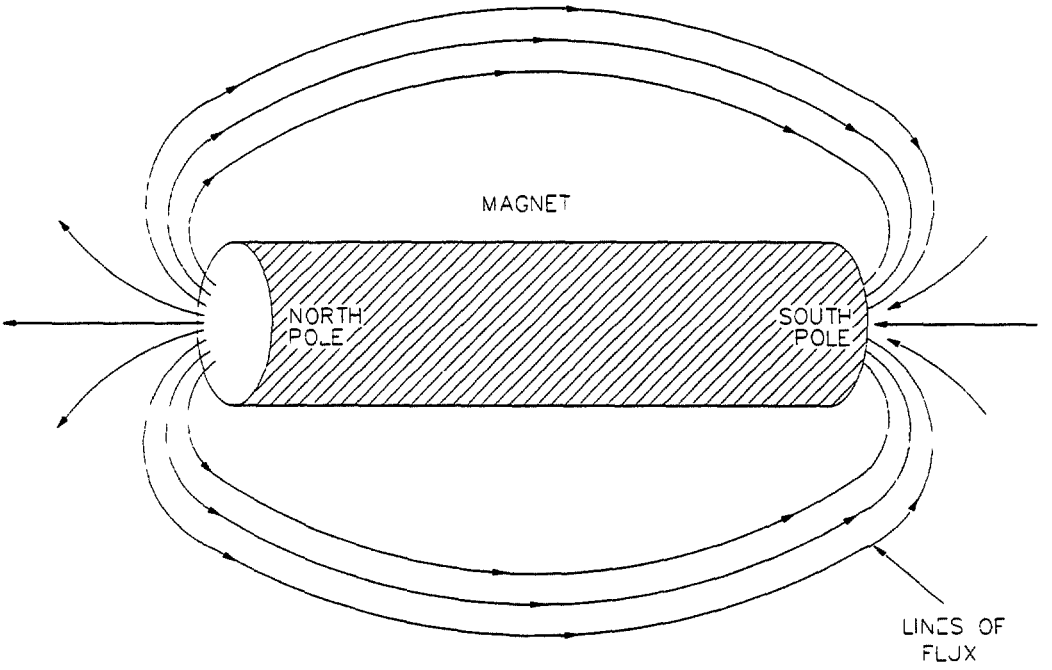

LINES OF FLUX TRAVEL OUT OF NORTH POLE PASS IN A CURVED PATH AROUND THE MAGNET TO THE SOUTH POLE AND THROUGH THE MAGNET TO THE NORTH POLE

CT\CT06003

Figure 3-100 Typical Bar Magnet

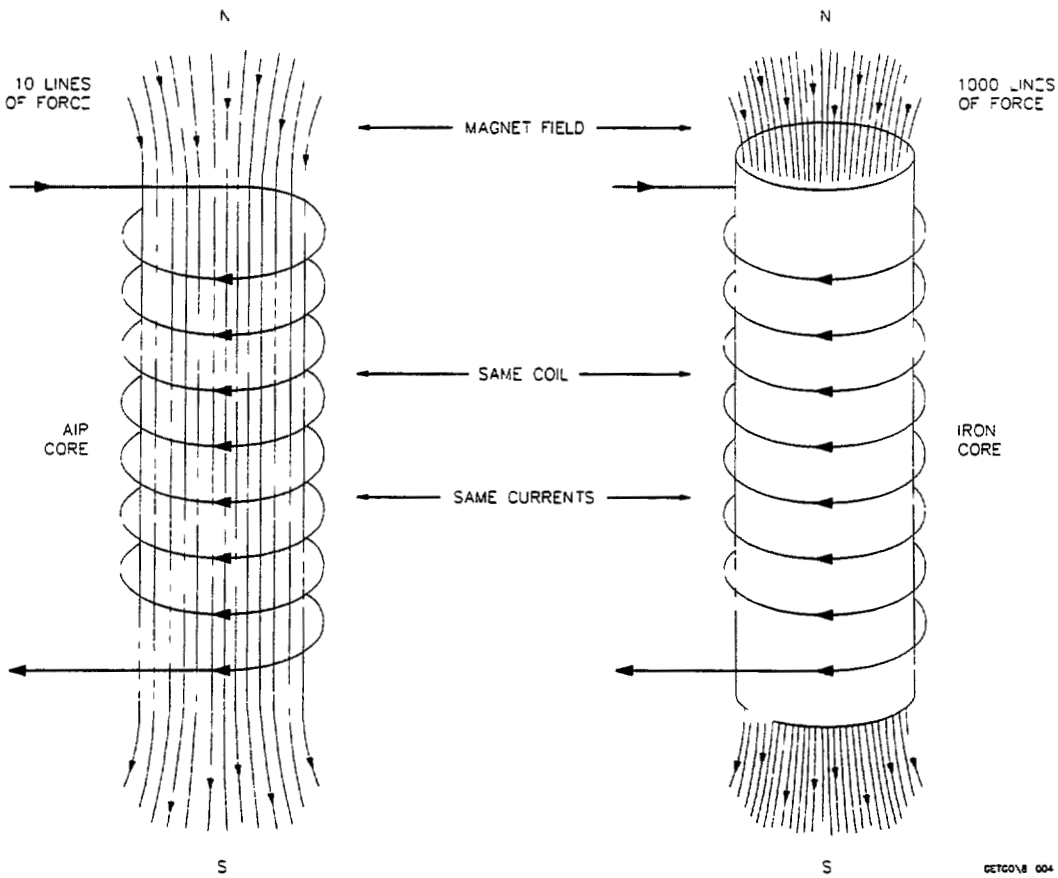

Figure 3-101 Creating Magnetic Field with Electricity

409

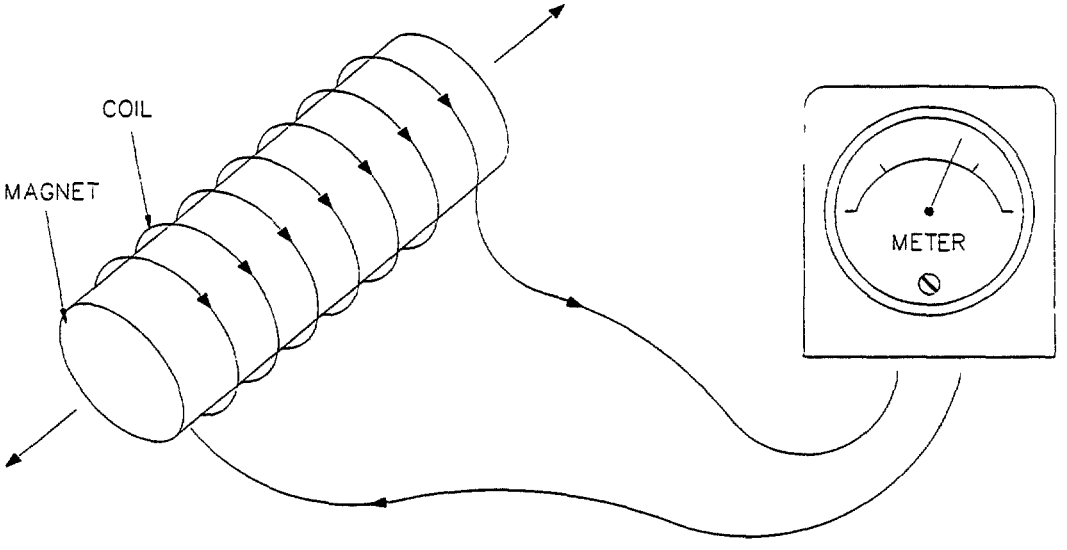

ELECTRICITY IS PRODUCED BY PHYSICALLY
MOVING THE MAGNET IN AND OUT OF THE COIL

CT\CT06005

Figure 3-102 Creating Electricity with Magnetic Field

410

The second way to increase field strength is by placing an iron core inside the loop as shown in **Figure 3-101(b)** This increases the strength of the magnetic field because iron has less resistance to the flow of lines of flux than air does There is a relationship between the number of line of flux and a property called magnetic reluctance which is similar to the relationship between current and resistance Reluctance is the resistance to the "flow" of lines of flux Just as current flow (through a conductor) can be increased by decreasing its resistance, the number of lines of flux can be increased by decreasing the magnetic reluctance by using the iron core What has been described is, of course, the common electromagnet

So far, the production of a magnetic field using the flow of current through a conductor has been discussed It is possible to produce a voltage and thus induce flow of current through a conductor using magnetism This is done by moving a magnetic field past a conductor It is possible to induce a voltage and flow of current through a coil of wire by moving a magnet through the coil as shown in **Figure 3-102** It turns out that the voltage and thus the current induced are proportional to the "rate of change of flux" that the wire "sees " Thus the amount of voltage induced in the wire can be affected in two ways, both of which affect the rate of change of flux Either the magnet that is passed through the coil can be made stronger (so that it will have more lines of flux) or the same magnet can be passed through the coil faster Either situation causes the rate of change of flux "seen" by the wire to increase

3 10 3 AC Electricity and A Simple AC Generator

While it has not been stated explicitly, the type of electricity that has been addressed so far is direct current (DC) electricity In the power utility field almost all power both generated and used is alternating current (AC) The sine wave is a representation of AC power The voltage and current in an AC circuit alternates in a fashion that can be represented as a sine wave if voltage is plotted against time

Figure 3-103 shows a simple AC generator that consists of a loop of wire that turns in the stationary magnetic field created by a permanent magnet Power is carried from the slip rings to a light bulb **Figure 3-104** shows the flow of current as the loop of wire turns within the stationary magnetic field The coil "sees" a change of flux because it "cuts lines of flux" from the magnet As the wire turns, it cuts lines of flux in one direction and a voltage is induced causing current to flow in one direction As the wire loop passes through 180 degrees, it cuts the lines of flux in the

441

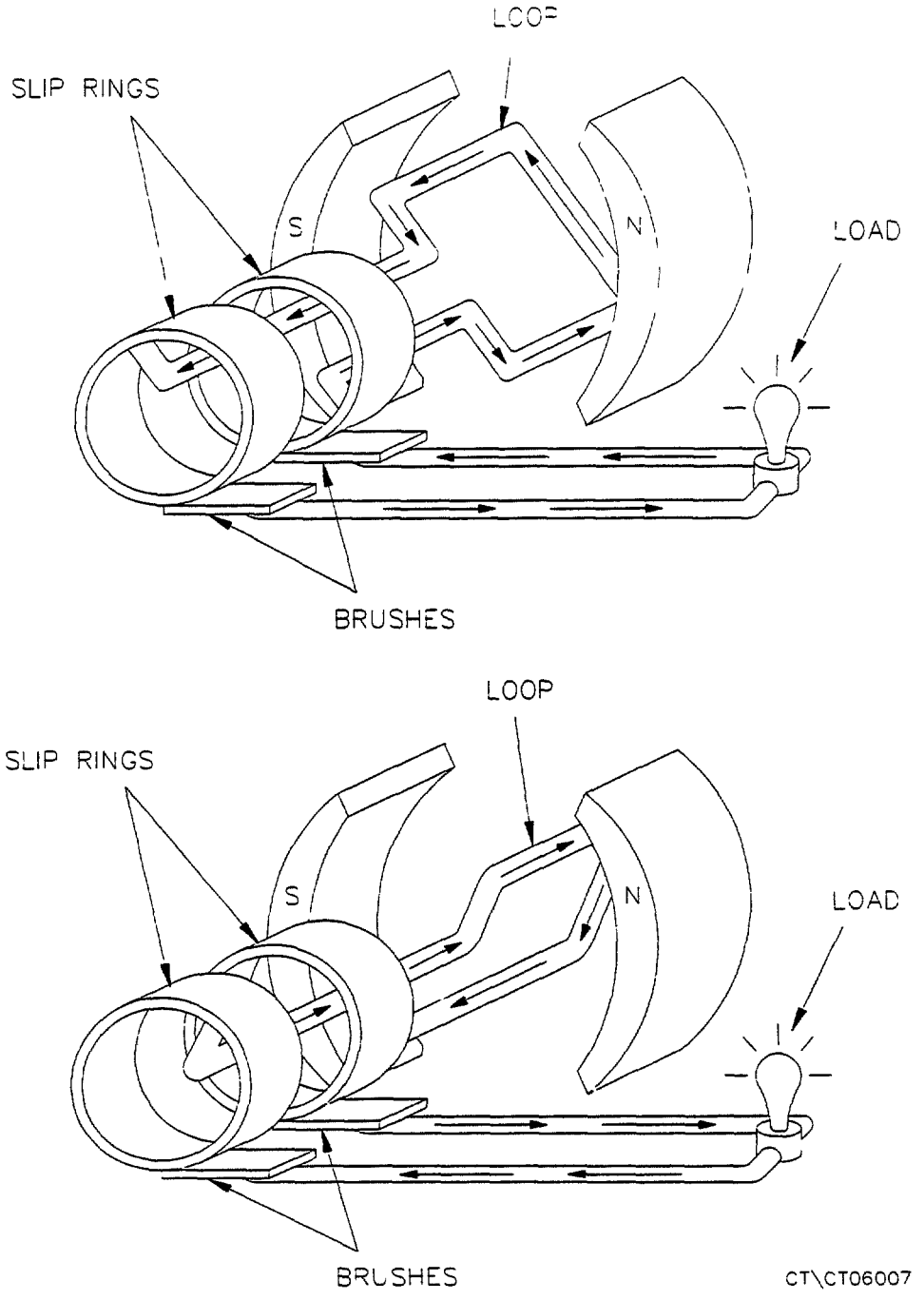

Figure 3-104 Simplified AC Generator Operation

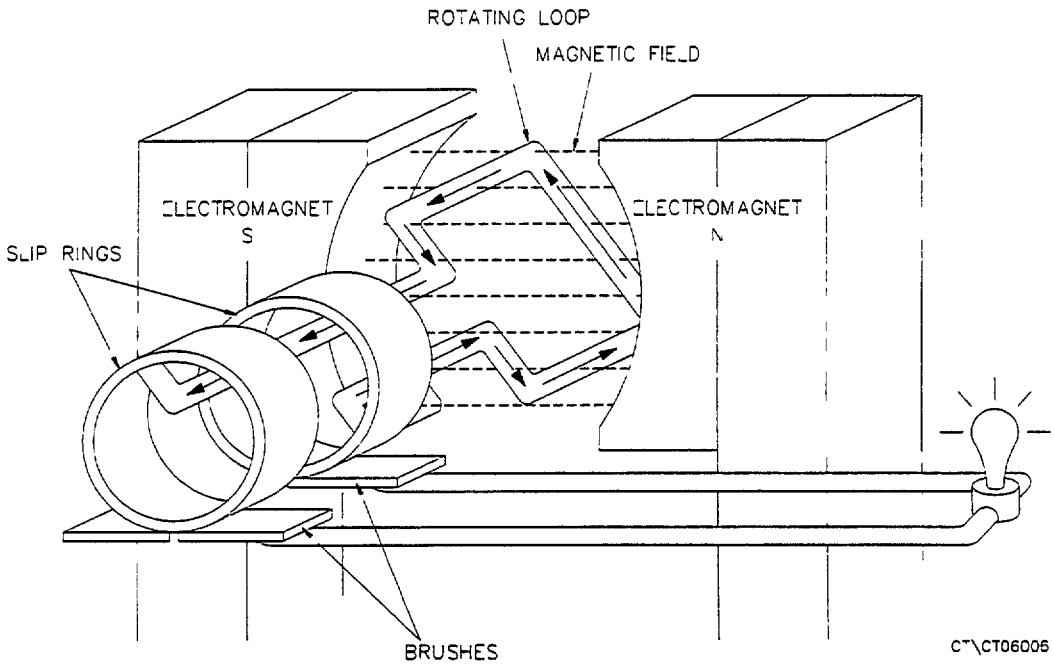

Figure 3-103 Simplified AC Generator

413

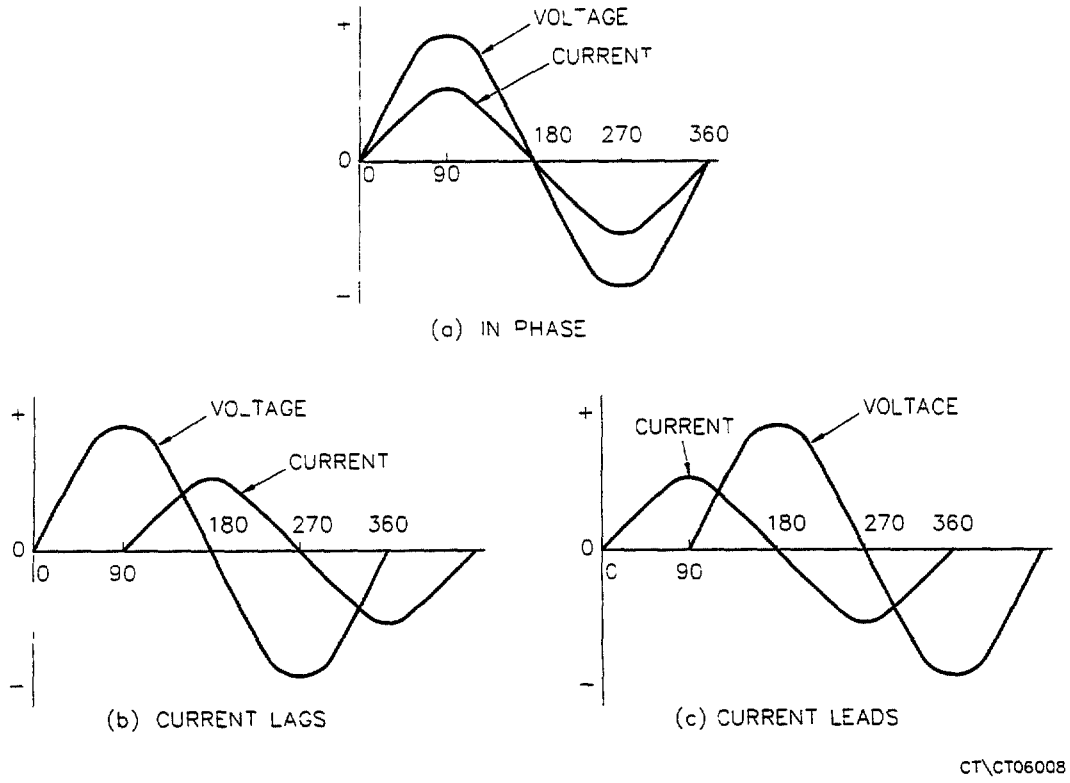

Figure 3-105 AC Power - Voltage and Current Phase Relationships

414

opposite direction causing voltage to be induced in the opposite direction causing current to flow in the opposite direction Note that in this generator, if necessary to increase voltage, it is necessary to increase the speed of the generator to increase the rate of change of flux seen by the coil There is no way to increase the strength of the magnetic field since the strength of the permanent magnet is not easily changed

3 10 4 Power Factor, Apparent Power, and Reactive Power

In a previous section the formula for computing electrical power in a DC circuit was given as

$$P = E \times I$$

This formula is also valid for computing power in AC circuits, as long as the voltage and current in a circuit are in phase "In phase" means that when current is at a maximum (peak) value, the voltage is also at a maximum value **Figure 3-105(a)** illustrates a situation when current and voltage are exactly in phase

If current and voltage are not exactly in phase, as shown in either **Figure 3-105(b)** or **Figure 3-105(c)**, then they are out of phase, and the power formula above cannot be used directly to calculate circuit power This is important for generator operation because it is very seldom that current and voltage are in phase

In an AC circuit, when voltage is multiplied by the current, the result is apparent power or volt-amperes The formula for apparent power is thus

$$\text{Apparent Power} = E \times I$$

If the voltage and current are exactly in phase, then apparent power equals true power Whenever voltage and current are not in phase, then apparent power must be multiplied by some factor to account for the phase difference in order to get the true power in watts This factor is called the power factor

The formula for true power in an AC circuit is therefore

$$\text{True Power (watts)} = \text{Volt-Amperes} \times \text{Power Factor} = E \times I \times Pf$$

In a DC circuit, the frequency is zero Under these conditions the reactance of an inductor is zero, and the reactance of a capacitor is infinite, or equivalent to an open circuit As frequency increases, the reactance of an inductor increases, the reactance of a capacitor decreases

Thus to find the total impedance of the components in an AC circuit, it is necessary to know the resistance, the capacitance, and the inductance of the components and the frequency of the AC Once the impedance of a system is known, the current flowing through it can be determined using Ohm's law with impedance in place of resistance Most of the devices in the electrical system connected to a utility generator, such as the main transformer, act as inductors

An important consequence of this concept is that for a given component, such as a transformer, the impedance changes when the frequency changes, even if the transformer and voltage have not changed Since, for a given voltage, the amount of current flowing through the transformer windings is inversely proportional to the impedance, the current increases as the frequency decreases, even though the voltage remains unchanged

3 10 6 Three Phase Power

The electricity used in most domestic applications, such as in the home, is single phase alternating current If single phase current was generated in power plants, the generators used to produce the power would operate like the simple AC generator described in the previous section Most power is generated as three phase power rather than single phase power, however, for the following reasons

1 A three phase generator has 50 percent greater capacity than a single phase generator of the same physical size

2 Single phase power is easily available from a three phase system by merely tapping from any two of the power leads

3 The cost of transmission is less, for the same voltage and current, in a three phase system than for a single phase system

If voltage and current are in phase, then the power factor is equal to 1 0 If they are not in phase, the power factor has a value less than one Most utility generators have a nameplate power factor of 0 85 to 0 90

It is important to understand that there is another consequence of current and voltage being out of phase, reactive power is also generated This type of power is measured in units called VARs (volt-amps reactive) It is very difficult to explain in easily understood terms what reactive power is and what it does One way to think of reactive power is this Reactive power is that power in devices such as electric motors which creates the magnetic field that makes the motor work The magnetic field represents stored energy which, although it does no work itself, is necessary for the electric motor to do work This concept can be extended to other devices such as transformers which also use magnetic fields Electric motors, transformers and, under most circumstances, generators are all inductive devices There is another class of electrical equipment called capacitive devices which also store energy in an electrostatic field These devices are not as common in power plants and electrical distribution systems and so have a lesser impact on the operation of the system as will be discussed

It is important to understand that while reactive power produces no useful work current must flow for reactive power just as it does for apparent power This is important because this means that the amount of heat produced in a device depends on the reactive as well as the apparent power

3 10 5 Impedance

The opposition to current flow in DC circuits is called resistance In an AC circuit the opposition to current flow is the total of resistance, inductance, and capacitance This total opposition is called impedance This concept is important in utility generator operation because the generator is an AC device

The opposition to flow by capacitors and inductors is given a special name, reactance, to differentiate it from resistance Inductive reactance is the opposition to flow of AC through an inductor Capacitive reactance is the opposition to the flow through a capacitor The value of the reactance for both is not only a function of the electrical characteristics of the component, but also is determined by the frequency of the alternating current

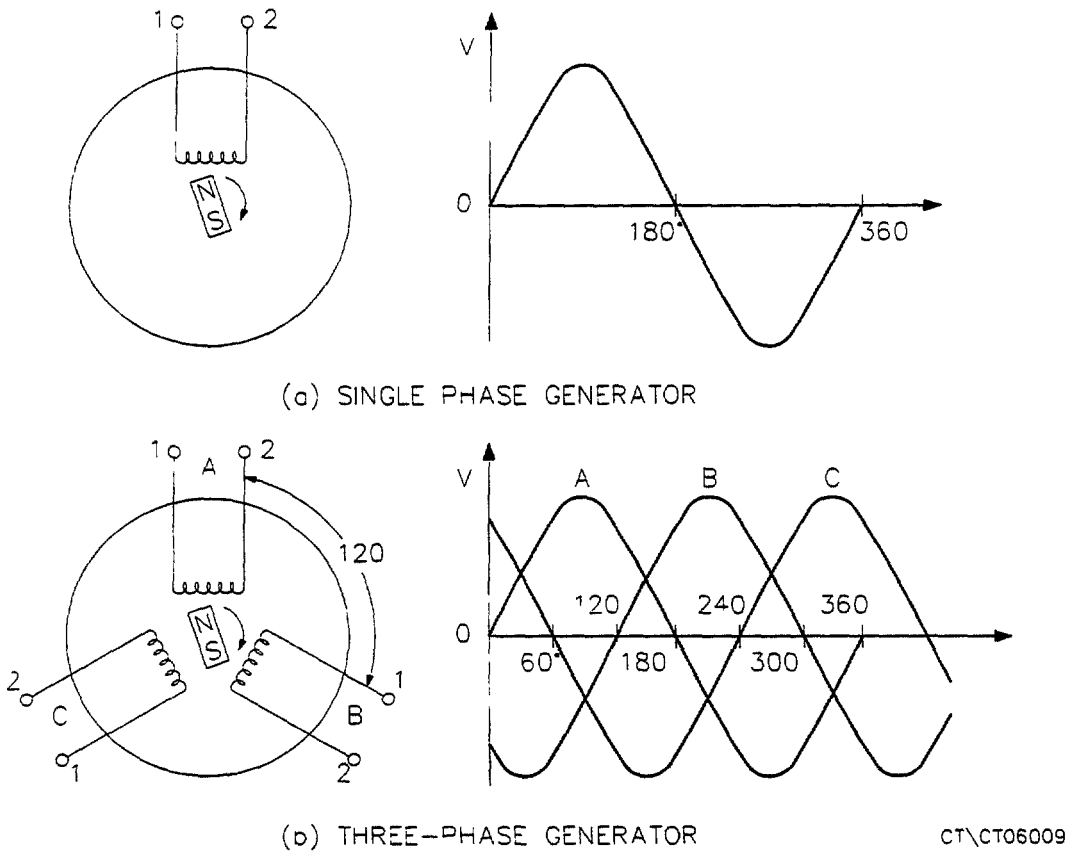

Figure 3-106 Illustration of Three-Phase AC Power and Generator

To understand what three phase power is and how it works, it is necessary to examine the operation of the three phase generator

The AC generator described earlier produced a single phase output that had a shape like that shown in **Figure 3-106(a)** If the single coil in the generator was replaced by three identical coils, spaced 120 degrees apart, then three separate outputs of the same shape would be generated Each output would equal zero at a separate point and reach peaks at separate times These waveforms would be separated by 120 degrees, the same spacing as the coils in the generator This is shown in **Figure 3-106(b)**

The Wye Connection

Rather than have six leads come out of the generator, one of the leads from each phase may be connected to form a common junction The stator is then called wye (Y) or star connected The common lead may or may not be brought out of the machine If it is brought out, it is called the neutral A simplified diagram of a wye-connected generator, with the common lead not brought out is shown in **Figure 3-107(a)** with each phase connected to some load, R

Each load is connected across two generator coils in series Thus R_{AB} is connected across coils A and B, R_{AC} is connected across coils A and C, and R_{BC} is connected across phases B and C in series The voltage across each load, therefore, is larger than the voltage across a single coil or phase This is advantageous because it means that the voltage in the conductors (wires) to the lead can be one half that which the load (such as a motor) requires

In a wye-connected AC generator, the three start ends of each single phase winding are connected together to a common neutral point and the opposite, or finish, ends are connected to the line terminals A, B, and C These letters are always used to designate the three phases of a three phase system, or the three line wires to which the AC generator phases are connected

For utility generators, loads between the phases are generally slightly unbalanced, a neutral is added, as shown in **Figure 3-107(b)**, between the common neutral and the loads The neutral wire serves as a common return circuit for all three phases and maintains a voltage balance across the loads No current flows in the

neutral wire when the loads are balanced This type of system is referred to as a three phase, four wire system

The Delta Connection

A three phase generator may also be connected as shown in **Figure 3-108** This is called a delta connection because the coils are connected in the shape of a triangle or the Greek letter, delta In a delta-connected AC generator, the start end of one phase winding is connected to the finish end of the third, the start of the third phase winding is connected to the finish of the second phase winding, and the start of the second phase winding is connected to the finish of the first phase winding The three junction points are connected to the line wires leading to the load

In the delta-connected generator, phase voltage is equal to line voltage because the phases are connected directly across the line wires Current flow through each phase is about 1 73 times greater than it would be in an equivalently rated single phase generator phase

Utility generators are almost always wye-connected This is due to the convenience of grounding the neutral and the relatively low voltage required in the windings to produce a given operating voltage

Power Calculation for Three Phase Generators

Because a three phase generator could be considered to be three single phase generators operating as one, it might appear that three phase power could be calculated by determining the power in one phase from the phase voltage and current and multiplying by three However, since the voltages and currents are out of phase with each other, the calculation is not quite so straightforward

In order to calculate three phase power, the algebraic sums of the power in the three phases must be computed The derivation of the formula is rather complicated and will not be covered here Three phase power may be calculated, if the loads are

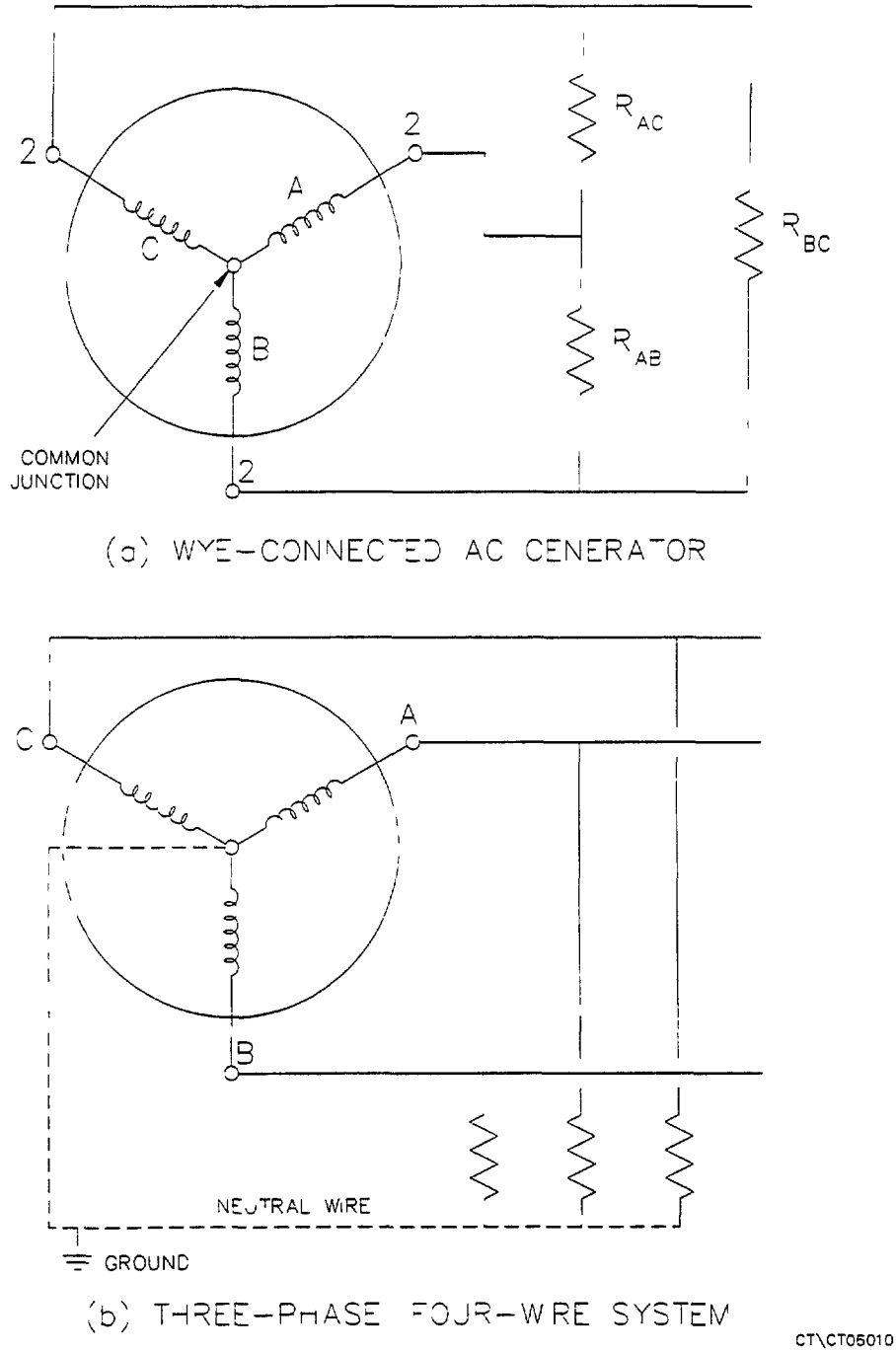

Figure 3-107 Wye Connections for Three-Phase AC Generator

balanced, if the line voltage and line current of one phase and the power factor are known The formula is

$$\text{True Power} = 1\ 73 \times E_{line} \times I_{line} \times \text{Power Factor}$$

Where

1 73 is a constant equal to the square root of 3
E_{line} is the phase voltage
I_{line} is the phase current

3 10 7 Three Phase Motors

Three phase motors are widely used in the power plant for many of the same reasons that three phase generators are used It is important to understand how three phase motors operate, because under some circumstances, the generator may behave as a motor

A three phase induction motor is similar to a single phase motor, except that there are three sets of windings in the stator instead of just one When three phase power is applied to these windings, a directional rotating magnetic field is set up, because the voltages will peak sequentially in each of the sets of windings The combination of the three individual magnetic fields will cause one composite field that rotates at a rate depending on the frequency of the incoming current For 60 hertz power, the field rotates at 3600 rpm **Figure 3-109** shows the direction of the magnetic field rotation and the currents produced by a three phase motor

The magnetic field starts rotating as soon as voltage is applied As the field rotates past the conductors in the motor rotor, a voltage is induced in the conductors because of the relative motion between the magnetic field and the conductor Current begins to flow in the conductors in the rotor

The current flow in the rotor creates another magnetic field in the rotor A force is exerted on the rotor due to the laws of magnetic attraction and repulsion The force exerted causes the rotor to move in the same direction as the rotating magnetic field in the stator Initially, the rotor moves much slower than the rotating field which results in the rapid cutting of the rotor conductors by the lines of flux, greater current

462

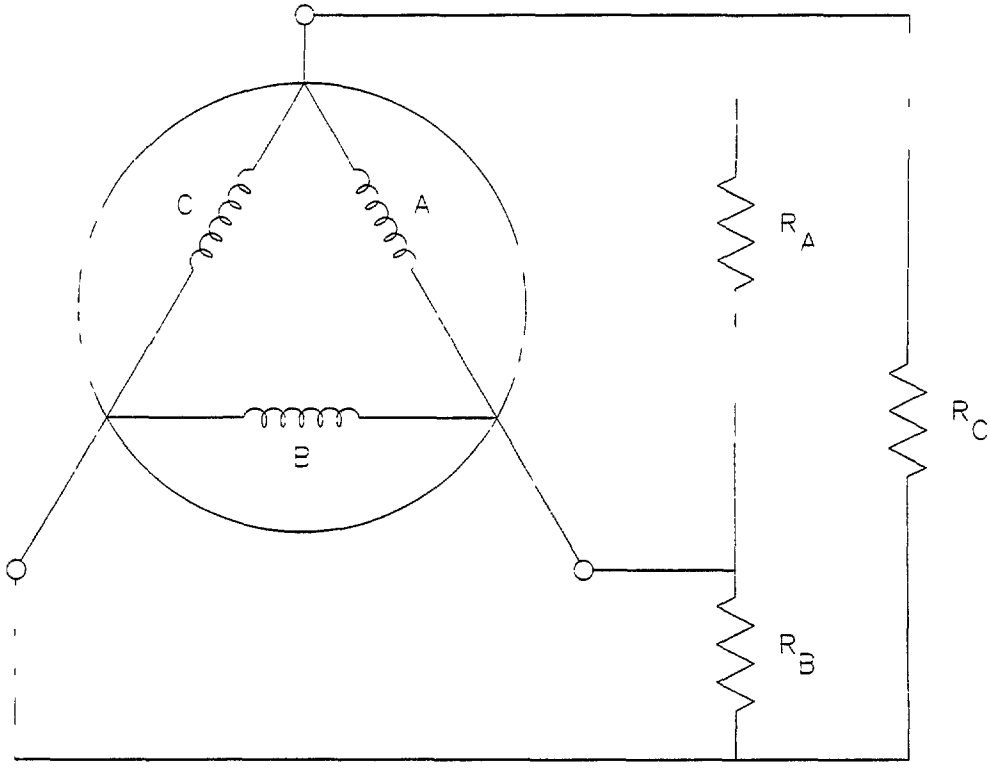

CT\CT0601

Figure 3-108 Delta Connection for Three-Phase AC Generator

flow, and greater force on the rotor As the rotor approaches the speed of the rotating field, the force decreases The rotor never quite reaches the speed of the rotating field If it did, the rotor and field would have no relative motion between them, therefore, there would be no current induced, and no force exerted on the rotor

The difference in speed between the rotor and the field is called slip When an induction motor is running unloaded, the slip is very small, usually less than 1% of the rotating field speed As load is increased on the motor, the rotor slows down slightly An increase in rotor voltage and current results The increase in rotor current causes an increase in the force exerted on the rotor conductors and the output torque of the motor increases A very small speed decrease will produce a considerable increase in torque At full load, the slip of a typical induction motor is about 6%

Not all AC electric motors function as the induction motor described above It is possible to provide an external source of DC voltage for the rotor windings This assures that there is a magnetic field in the rotor all of the time with no slip speed, the motor rotor turns at exactly the same speed as the system magnetic field from the armature windings Accordingly, this type of motor is called a synchronous motor

Like the synchronous motor, in an AC utility generator the rotor and magnetic fields rotate at exactly the same speed, thus no currents are induced in the rotor windings D C current from an external source called the exciter, flows through the generator rotor windings to create the rotor magnetic field

The generator behaves as an induction motor if there is no exciter current and there is voltage still applied to the armature This can result in severe damage because the generator is not designed to act as an induction motor

3 11 Generator Construction

There are two main components in the generator, the rotor and the stator The generator must also have a source of DC current to magnetize the rotor, usually called

4264

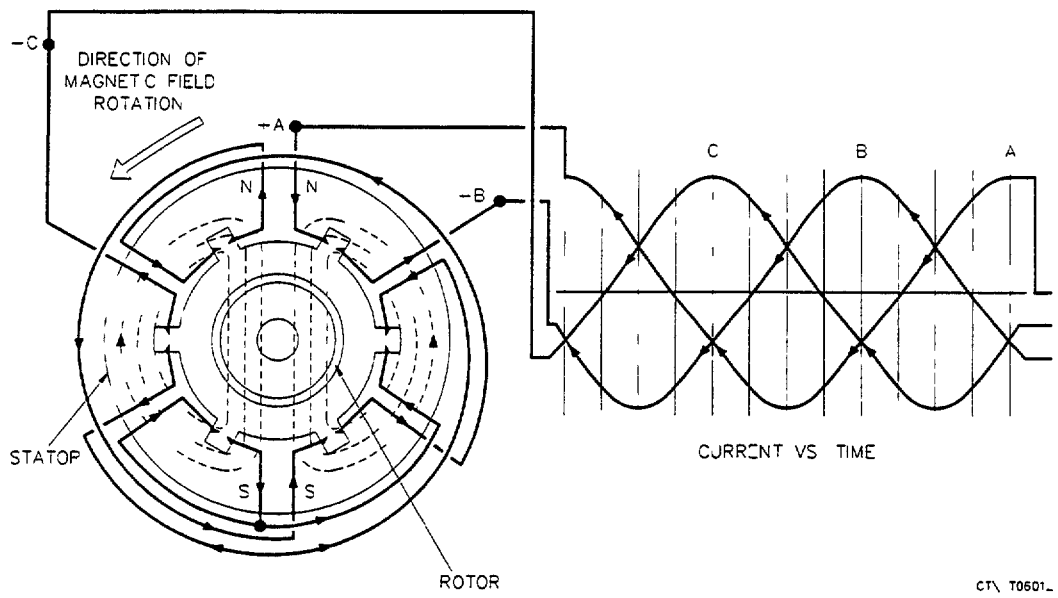

Figure 3-109 Three-Phase Induction Motor Operation

The reason for these requirements is difficult to understand because of the electrical theory involved To understand the frequency and phase angle requirements, it may be helpful to think of the electrical system as a column of marching soldiers, with each generator as one soldier As long as each soldier marches at the same pace (frequency) and in step (in phase) the column marches along with no problems The column is disrupted if one soldier tries to march at a different pace or out of step

The third requirement that each generator must also satisfy (voltage) does not fit into the analogy of the marching soldiers Each generator must supply power to the system at about the same voltage Minor variations are permitted, however, and indeed are sometimes required The requirements for an incoming generator are illustrated in **Figure 3-134**

The requirements of frequency and phase angle are satisfied automatically in normal operation after the main and field breakers of a generator are closed The generator is said to be synchronized or paralleled to the system The electromagnetic forces created when the generator is synchronized to the system will "hold it in step " This is true even if the steam valves supplying steam to the turbine driving the generator close The generator then will take power from the system and act as a synchronous motor, operating at 3600 rpm Note that this is a different situation than that described in the previous section regarding induction motors In this case, because the exciter current remains, the rotor will continue to rotate at the same speed as the magnetic field in the armature, 3600 rpm

The most critical time of operation for the generator is during startup when it is synchronized to the system Much of the rest of this section will explain in more detail how the requirements for synchronizing are satisfied and how the unit is synchronized

Frequency and Phase Angle

When a turbine-generator is first started up, the main generator breaker and the field breaker are both open The field breaker is usually closed at about rated speed The field breaker supplies the DC current to the generator rotor to magnetize it Once this happens, the generator will produce a voltage, but no current flows until the main breaker is closed

Operation of the seal oil system with the lube oil backup as supply will resu in contamination of the hydrogen in the generator due to the untreated oil Once again the hydrogen in the generator will be contaminated, making scavenging necessary to prevent loss of hydrogen upon failure of the emergency seal oil pump It is necessary to limit generator load at reduced hydrogen pressure

The seal oil system is interconnected to the lube oil system In a properly installed system, it is often possible to operate the seal oil system with the lube oil system shut down, however, it is not recommended If there are some abnormal conditions, oil can spill back to the lube oil tank, slowly draining the seal oil system Eventually the seal oil tank will be drained, causing the seal oil pumps to lose suction

3 12 Generator Operation

The basic principles of both DC and AC electricity have been described as well as their application to motors and generators The basic construction of the generator has been described This Section describes the operation of the generator The first operation described is perhaps the most important, synchronizing the generator to the electrical distribution system

3 12 1 Synchronizing the Generator

Many large AC generators operate in modern electrical systems, each feeding power to the system Each generator must satisfy three conditions in order to operate in such a system

- Its operating frequency must be the same as that of the system
- It must be in phase with the system
- It must be at the same voltage as the system

If any of these conditions are not met, severe damage to the generator may result The system may also be affected, but generally the power of the system is much greater than that of any one generator and so the effect on the system is usually slight

The frequency of the system is measured in Hertz, but the speed or "frequency" of the turbine-generator is measured in revolutions per minute (rpm) For all 3600 rpm turbine-generators, the frequency of the generator may be determined by simply dividing the speed in rpm by 60, and for 1800 rpm turbine-generators by dividing the speed in rpm by 30

The turbine control system will hold the speed of the turbine-generator very close to the frequency of the system before synchronizing, but usually there will be a small difference of perhaps 0 1 Hertz The turbine controls allow the operator to make the fine adjustments of turbine speed necessary to exactly match frequency Some units have automated controls which will match the frequency without operator intervention

The operator uses a meter called a synchroscope (see **Figure 3-135**) to match the generator and system frequencies The synchroscope resembles a clock with only one hand That hand rotates clockwise when the generator frequency is greater than system frequency and counterclockwise when it is less The speed at which the hand rotates is the same as the difference in frequencies, converted to rpm Thus, if the turbine-generator were operating at 3601 rpm and the system frequency were at exactly 60 Hz (equivalent to 3600 rpm), the hand would move clockwise at 1 rpm When the frequencies are matched exactly, the hand would stop rotating

The synchroscope also provides another valuable indication, phase angle The generator may be at exactly the same frequency as the system and yet be "out of phase" with the system Referring back to the analogy of the marching soldiers, one soldier may be marching at exactly the same cadence as the rest of the column, but may be putting his left foot down while the rest of the column puts their right foot down He is "out of phase " Electrically, **Figure 3-136** illustrates the concept of phase angle which is generally measured in degrees

This Figure shows two "sine waves " The voltage of any generator has such an output for each phase Thus, the Figure shows the voltage change for one phase of the generator and the same phase of the system The two have exactly the same frequency, but because they are displaced horizontally from each other, they are not in phase The operator can get the two in phase by either speeding up or slowing down the generator just long enough to make the two curves overlap

128

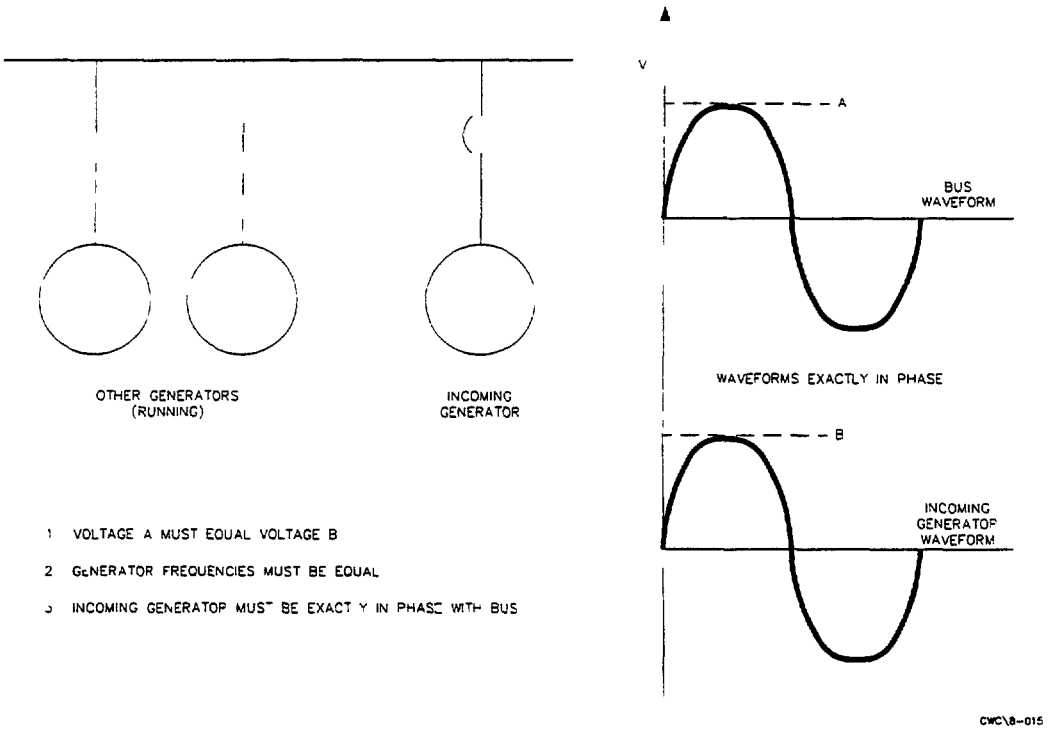

Figure 3-134 Requirements for Generator Synchronization

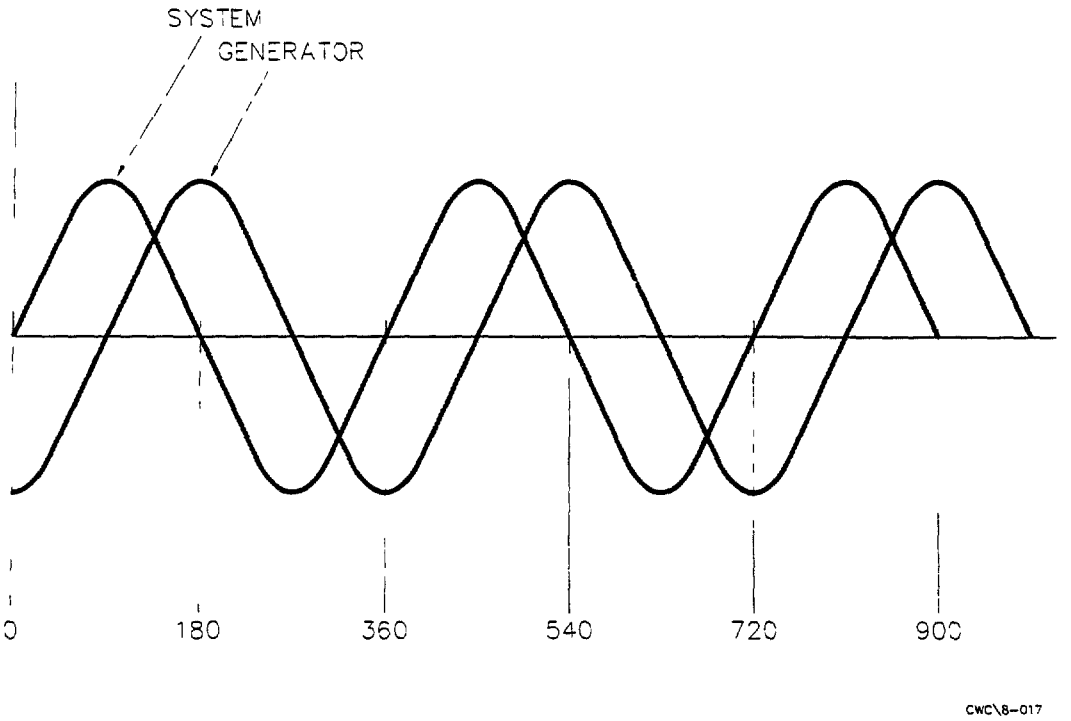

Figure 3-136 Illustration of Generator and System Voltage Phase Angle

430

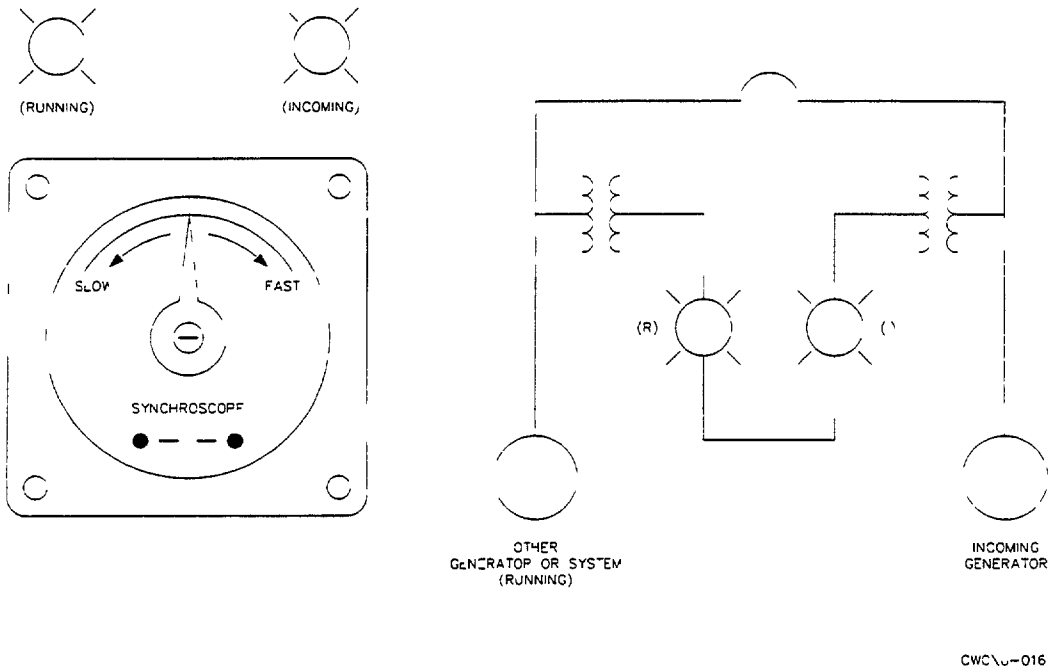

Figure 3-135 Typical Synchroscope

431

The operator may find it necessary to adjust the generator speed and then voltage several times in order to synchronize Before synchronization, if the speed is increased, the voltage also increases Conversely, the voltage decreases when speed decreases This is because the voltage of the generator is determined by how many lines of magnetic flux cut the conductor per second The generator voltage may be changed, before the breaker is closed, by adjusting either speed or the strength of the field

The generator can be severely damaged if there is a substantial mismatch of voltage with the system This can occur because there can be very high currents induced in the stator which cause damaging heat

After the generator breaker is closed, varying generator voltage controls the amount of reactive power or VARs that the generator supplies to the system or uses from the system If the generator voltage is increased slightly above the system voltage, the generator will supply VARs to the system At voltages below the system voltage, the generator will use VARs from the system, and when the voltages are exactly the same, the generator will neither produce nor use VARs

In most operations, the generator will supply VARs to the system (higher voltage) and operation in this mode is called lagging or "buck" Occasionally when system load is low (usually nights or weekends), the system will not require VARs and the generator may be required to "use up" some of the excess VARs in the system When operated in this mode, the generator is said to be leading, "boost" The system dispatcher usually directs each plant in the system to produce or use the proper amount of VARs similar to the way he directs the proper load in watts to be carried

3 12 2 Generator Voltage Controls

In operation, the generator voltage is affected by conditions in the transmission system This requires that some controls be available to adjust and maintain proper voltage The voltage of the generator is controlled by varying the DC current flowing through the generator rotor This current is supplied by the exciter Increasing the DC current through the rotor increases the rotor's magnetic field which in turn increases generator armature voltage Decreasing the field current decreases the armature voltage

The position of the hand of the synchroscope shows the phase angle between the system and "incoming" generator When it is pointed straight up (12 o'clock), it indicates that the generator and the system are in phase, that is, the phase angle is zero When the position is straight down (6 o'clock) the phase angle difference is 180 degrees, which is the worst condition

The operator adjusts the speed of the turbine generator to obtain a position of the synchroscope hand of 12 o'clock, with the hand stopped, in order to close the main generator breaker Most units have a key type interlock which requires the synchroscope to be in service as a permissive for closing the main generator breaker In practice, it is desirable to have the speed of the turbine-generator slightly greater than system frequency, such that the synchroscope is travelling slowly (about 1/2 rpm) in the "fast" direction In this case, the main generator breaker is closed "on the fly" just before the hand reaches 12 o'clock (at about 5 minutes before 12) Once the generator breaker is closed, the generator is said to be synchronized or paralleled to the system

The generator can be damaged severely if the main breaker is closed with the generator and system out of phase or with a large difference in frequency This is because very large currents will flow in the windings of the stator causing damaging heat, and tremendous forces will result as the system literally "pulls" the generator into synchronism Often there is protective relaying which prevents the generator breaker from being closed unless phase angle and frequency differences are very small The operator should not, however, rely upon this protection

Generator Voltage and Reactive Power

There is a third requirement for synchronizing the generator The voltage of the generator must be very close to that of the system Generator voltages are generally around 13 kV to 22 kV and are stepped up to 130 kV to 230 kV by a step-up transformer The main generator breaker is between the transformer and the bus The running system voltage is measured on the bus side of the breaker The incoming voltage is measured on the high side of the transformer or on the transformer side of the breaker The operator must match the generator voltage to the running voltage as well as matching system frequency and phase before closing the main generator breaker

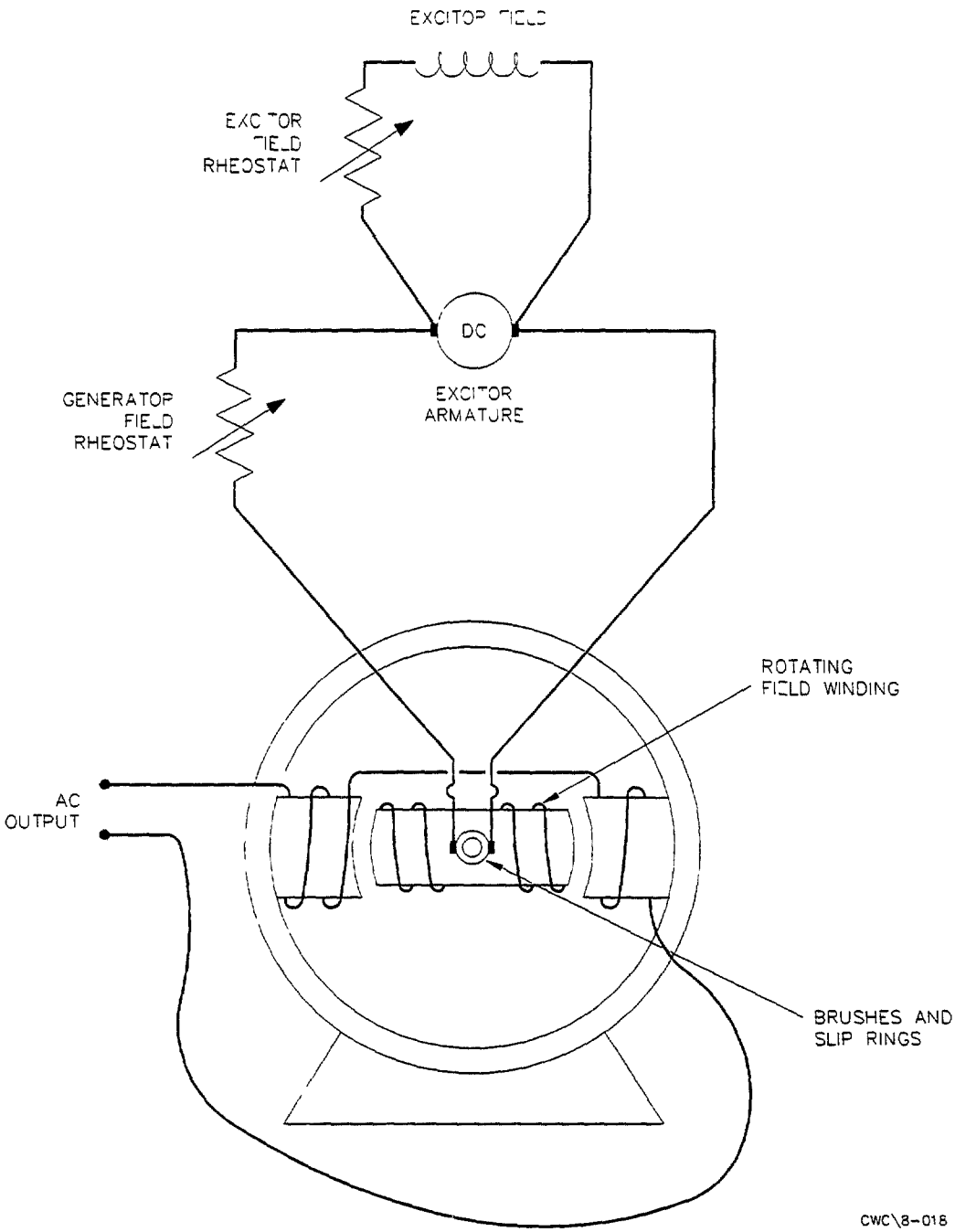

Figure 3-137 Simplified Generator Voltage Control

434

The most simple voltage control is a rheostat This is a variable resistance in series with the generator field When the rheostat is adjusted manually by the operator to decrease the resistance in the rotor winding circuit, more current flows and the armature voltage is increased The generator armature voltage is reduced by adjusting the rheostat to increase the resistance **Figure 3-137** shows a basic AC generator with such a manual voltage control

Most modern generators have a voltage regulator to automatically maintain armature voltage at a desired setpoint The regulator usually has two modes, manual and automatic The manual mode actually regulates the DC voltage applied to the field This will maintain constant generator armature voltage before the generator breaker is closed, but will not after it is closed because of changing transmission system conditions

The automatic mode is most often used in normal operation It actually controls the generator terminal voltage The regulator can be transferred between manual and automatic in operation It is necessary to match the signals produced by the two regulators before transferring from one regulator to the other This is because if the signals were not matched, there would be a sudden change in armature voltage upon transferring A large change could cause generator damage A null meter is provided to match the signals before transferring

It is good operating practice to have the automatic voltage regulator in service at all times during normal operation It can respond to abnormal conditions in the system caused by problems such as short circuits outside the plant and help to prevent generator damage and reduce the "upset" to the system

Most excitation control systems have some automatic protective features The following is a brief description of some of the more common features that are found in the excitation systems

Maximum Excitation Limit

The maximum excitation limit is simply a ceiling limit which prevents the excitation current from exceeding safe limits If the field current were to exceed safe limits, it would cause overheating in the field windings which could result in failure of the insulation and a short circuit

system with too little reactance between them Without such a system, there would be uneven sharing of the reactive load between the generators

Power System Stabilizer

Under certain conditions, instability in the electrical distribution system can cause changes in system frequency, which translate into oscillations in the speed of the turbine-generator If the frequency of the oscillations happens to occur at the natural torsional frequency of the turbine-generator shaft system, the shaft may fail The power system stabilizer senses shaft speed and varies the generator field voltage to dampen the oscillations

3 12 3 Generator Reactive Capability Curves

Earlier it was explained that there are two different types of power generated by a three phase, AC generator, real and reactive Both types of power cause current to flow in the generator armature windings, and so it is necessary to monitor both Westinghouse provides capability curves to give limits on how much of each type of power may be generated for each of their generators

The reactive capability curve is just what the name implies, it is a plot of the loading limits, at different power factors and hydrogen pressures, that the generator is capable of operating at without overheating **Figure 3-138** shows a typical reactive capability curve The each capability curve for a given hydrogen pressure is actually three curves in one The individual curves depict

1 Field winding heating limit (upper curve segments)
2 Stator winding heating limit (right side curve segments)
3 Stator core end iron heating limit (lower curve segments)

Megawatts (real or true power) are shown on the horizontal axis while megavars (reactive power) are shown on the vertical axis The overall capability curve is composed of three separate curves because different parts of the generator limit overall operation The limiting factor depends on the loading condition At high reactive loads, the field winding overheats first At low reactive load, the core end iron is the limiting factor At high real load, the stator is the limiting factor

Volts per Hertz Protection

It is possible to exceed safe limits for current in both the main generator and the main transformer if the system frequency falls, even though the voltage remains at what would normally be safe limits This is because the impedance (remember that this is the AC equivalent of resistance) goes down as the system frequency goes down Thus, the current will increase even if there is no increase in voltage The volts per hertz circuitry "looks at" the system voltage and compares it to the system frequency It provides a signal to the AC regulator to reduce voltage if the frequency falls such that the current might exceed safe limits It is important to understand that volts per hertz is most often a problem when the field is excited, but before the generator is synchronized At this point in start-up, current is flowing through the generator and main transformer windings even though the breaker has not been closed Generator speed can fall at this point because it is not synchronized to the system

Underexcited Reactive Ampere Limit (URAL)

The generator voltage is reduced by reducing the current flowing through the generator field in normal operation If the DC current through the generator field fall too far, the magnetic force which holds the generator in synchronism with the electrical power system becomes weak This could result in the generator "slipping a pole" which could result in very high currents being induced in the generator, resulting in damage from overheating This also causes very high mechanical forces which can also cause damage

Impedance Compensation

Impedance compensation can perform two functions The first is to maintain the voltage, at some point other than the generator terminals, at some constant voltage This is often necessary when there is a substantial voltage drop in the transmission lines

The second function is to provide "voltage droop" in the regulator Voltage droop is similar to speed droop in the turbine governor This provides a means of reactive load (VAR) sharing between generators which are operating in parallel in a

The operator should check the curve before making changes in real or reactive load to avoid exceeding the generator capability To use the curve the operator plots the load in watts on the horizontal axis and then extends a vertical arrow up (or down) by the length shown on the vertical axis for the amount of VARs being generated or used If the point of the MVAR arrow is inside the curve, for the present gas pressure then all is well as the generator will be operated within its capability

Often in operation the operator will be asked by the dispatcher to increase load and or reactive power He should check the reactive capability curve to determine if it is possible to satisfy the dispatcher's request It is not uncommon to find that either real load or reactive load requirements can be satisfied, but not both at the same time It is important to note that the generator capability can be exceeded even if the megawatts are less than the turbine rating, by producing or using too much reactive power

3 12 4 Operational Limits

Operational limits for the generator are associated principally with temperatures The generator is equipped with a large number of RTD's (Resistance Temperature Detectors) and TCs (thermocouples) to measure temperatures These RTDs monitor the following

- Cold gas temperature from each hydrogen cooler
- Hot gas temperature into each hydrogen cooler
- Stator winding center zones (RTDs imbedded between coils in selected slots)
- Stator winding end zones (TCs in selected slots)

Westinghouse provides the following recommendations regarding the temperatures The nameplate says calls for maximum hydrogen cooler water inlet temperature of 95°F ad that with cold gas temperature of 46°C cold gas temperature the temperature rise for both the stator and rotor will not exceed 64°F

The temperature of the cold gas from the hydrogen coolers should be balanced such that all cold gas temperatures should be within 2°C If the temperatures are not balanced, the manual cooling water valves on the "cold" coolers should be throttled to establish balanced temperatures

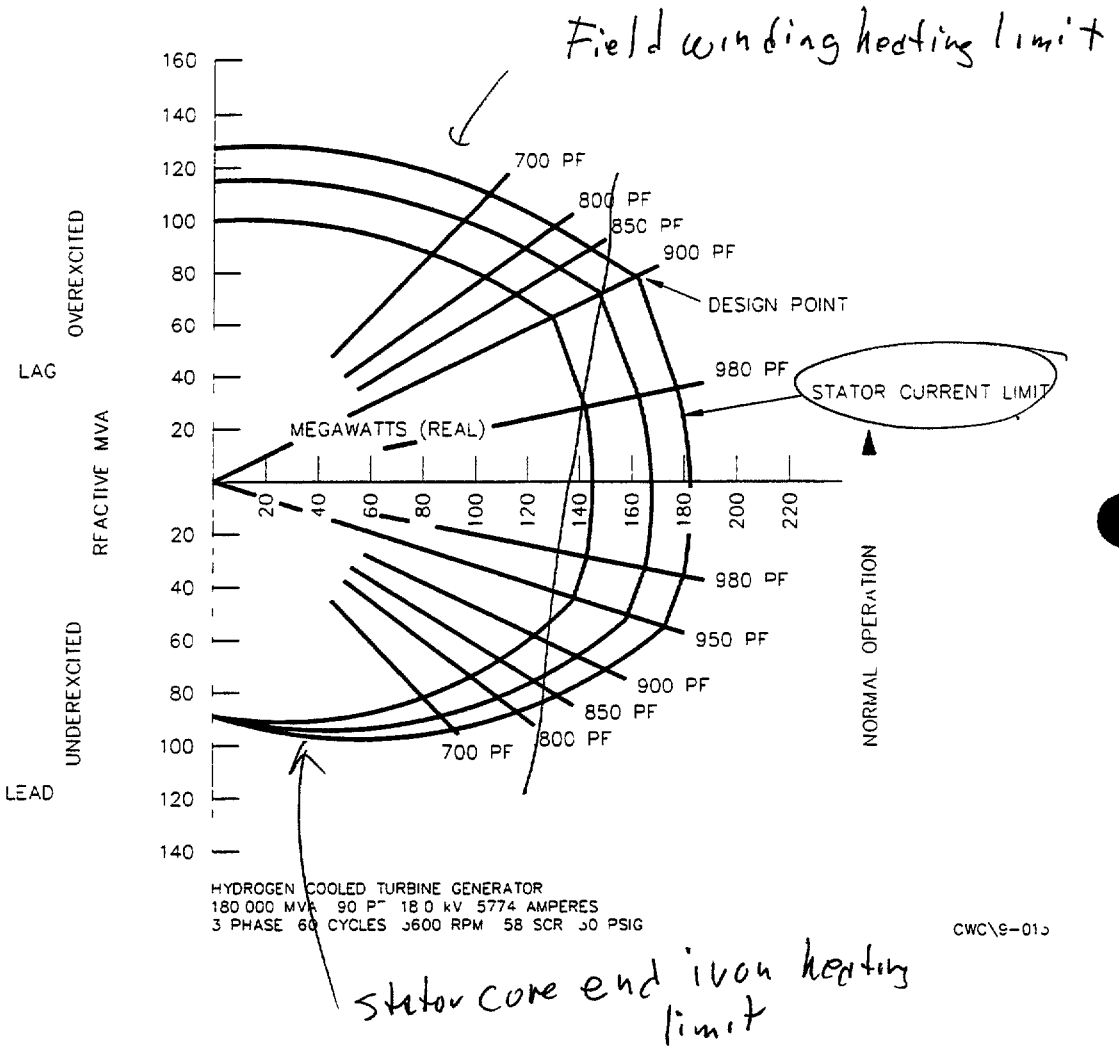

Figure 3-138 Typical Reactive Capability Curve

Operation with Unbalanced Phase Currents

In normal operation, the currents in each phase of the generator are about the same and are said to be balanced When the phase currents are balanced, a symmetric, rotating magnetic field is created in the stator which rotates at the same speed as the generator rotor

If an imbalance of phase currents in the stator occurs, the stator's rotating magnetic field becomes distorted and asymmetric This means that as the generator rotor spins it "sees" a change of magnetic flux once each revolution Any time a conductor experiences a change in magnetic flux, a voltage is induced and, if there is a complete circuit, currents will flow That is exactly what happens to the generator rotor The asymmetric magnetic field from the stator induces a voltage and causes currents to circulate on the surface of the generator rotor If the currents become great enough, there will be heating of the rotor surface which can be very harmful to the generator Unbalanced phase currents also cause current to flow in the neutral tie, where, if all phases are balanced, no current normally flows

Generators are designed to withstand operation with some unbalanced current since in practice the 3 phase currents will never be balanced exactly Most manufacturers generally guarantee that their equipment can operate continuously with from 5% to 10% negative phase sequence current The negative phase sequence current is usually expressed as a percentage of rated armature current and it must be calculated If the negative phase current exceeds the maximum allowed, one of the following steps should be taken

1 Reduce the generator load

2 Reduce voltage without exceeding the underexcited reactive capability

3 Take the generator off line

Westinghouse simply says that the generator should be able to withstand normal operation with unbalanced phase currents when operated in a system with appropriate protective relaying

For the imbedded stator winding temperature indications, the temperatur differences are significant If there is a failure in the stator windings it is generally localized and so the temperature in the area of the failure is higher than the unaffected areas Accordingly Westinghouse provides the following guidelines on the maximum allowable temperature differentials

Zone	No Load	1/4 Load	1/2 Load	3/4 Load	Full Load
Center	5°C	6°C	7°C	9°C	9 9°C
End	5°C	6°C	7°C	9°C	9 9°C

Westinghouse recommends that if the temperature differential exceeds 10°C the generator should be tripped immediately The temperature instruments should be monitored closely during the coastdown following the trip If the temperature difference remains as the generator cools, the difference is likely caused by faulty instrumentation It is expected that all stator winding temperatures should agree within about 2°C

3 12 5 Abnormal Generator Operation

It is not uncommon for the switchboard operator to have to deal with generator operational problems The following is a summary of some of the more common problems that occur

Operation with Reduced Cooling Capability

Each of the two hydrogen coolers has two independent sets of tubes with their own water boxes This allows one half of a cooler to be removed from service for maintenance while the other half remains in service Westinghouse recommends that when this is done the hydrogen pressure be reduced to 30 psig and the load reduced to 80% of the allowable load for that pressure as shown on the reactive capability curve

per hertz is simply the voltage of the armature, expressed as a percentage of rated voltage, divided the actual speed expressed as a percentage of rated speed This may also be expressed as shown below

$$\frac{\text{Actual Voltage/Rated Voltage}}{\text{Actual Speed/Rated Speed}} \times 100\%$$

The maximum volts per hertz allowable is usually about 120% for a maximum duration of two seconds Automatic volts per hertz relaying is often provided to trip the generator if these limits are exceeded

Another phenomenon related to off frequency operation is "magnetic drag" On older units it was common to leave the excitation with high currents on the field after the unit was tripped This created a "magnetic drag" on the rotor and resulted in the unit coasting down more quickly It also results in heating of the generator core which can cause damage This problem is made worse by the fact that as the rotor speed falls, gas circulation is also reduced, resulting in less cooling Excitation during coast down not exceed that required for rated armature voltage at rated speed and excitation should be removed when the unit reaches 50% of rated speed

Loss of Field

Loss of field is a term used to describe operation of the generator with the main generator breaker closed and without excitation, usually because the field breaker is open When this situation occurs, currents are induced on the surface of the rotor This is because without excitation to keep the unit synchronized, the rotor does not turn at the same speed as the rotating magnetic field in the stator Since the rotor "sees" a changing magnetic flux, a voltage is induced and currents flow on the surface of the rotor These currents will cause heating of the rotor surface as with negative phase sequence currents

Usually utility generators are provided with loss of excitation relays These relays trip the main breaker and field breaker when the generator loses excitation If the generator field is lost and the loss of excitation relays do not open the main generator breaker immediately, trip the unit Operating the generator with the main generator breaker closed, but without excitation, will cause overheating of the generator field It takes only a few seconds for the overheating to cause damage

Operating with loss of field should not be confused with what is commonly called "motoring" When a generator is "motored" both the field breaker and main breaker remain closed, but instead of generating power, the generator uses power from the system and acts as a synchronous motor There is no loss of field with motoring Motoring is not harmful to the generator provided that normal limitations on voltage, current and temperature are observed Motoring can, however, be harmful to the turbine as explained earlier

Off Frequency Operation

When generators are operated at less than normal speed or frequency, the resistance to AC current (impedance) is reduced This is because rises with increased speed and falls with decreased speed If the frequency goes down and the armature voltage remains the same, the armature current will increase Because of this phenomenon, the generator load must be reduced as the frequency falls

Operation at lower frequencies without reduction in generator voltage is made possible by design to allow the unit to withstand fault conditions A quantity called "volts per hertz" is used to define the limitations imposed for such operation Volts

Combined Cycle
Principles Course
Module 4

Heat Recovery Steam Generator

FCS
Fossil Consulting Services, Inc.

Columbia, Maryland

444

TABLE OF CONTENTS

Section		Page
4 0	HEAT RECOVERY STEAM GENERATOR (HRSG)	1
4 1	Overview	1
4 2	Function	1
4 3	Principles	2
4 4	HRSG Flowpaths	17
4 4 1	Low Pressure Steam Generator Section	17
4 4 2	Intermediate Pressure Steam Generator Section	18
4 4 3	High Pressure Steam Generation Section	18
4 5	HRSG Major Components	19
4 5 1	Low Pressure Steam Generation Section	19
4 5 2	Intermediate Pressure Steam Generation Section	28
4 5 3	High Pressure Steam Generation Section	37
4 6	HRSG Inspections	47

465

4 0 HEAT RECOVERY STEAM GENERATOR (HRSG)

This module provides an understanding of the theory, principles of operation and maintenance, and general arrangement of Heat Recovery Steam Generators (HRSGs) The HRSG is the interface between the gas turbine and the steam cycle components Proper operation and maintenance of the HRSG ensures high availability and efficiency of the combined cycle plant

4 1 Overview

In the simple cycle mode of operation the temperature of the exhaust gas leaving a gas turbine can be as high as 1,050°F, and flow rates can be as high as 3 million pounds per hour This high temperature gas represents a source of heat energy which can be recovered if the means to do so are available By recovering this waste heat, not only can the output of a power plant be increased, but its overall efficiency will be greatly enhanced

Although the exhaust gases leaving the turbine contain a large amount of heat, all of the heat cannot be practically recovered in a heat recovery system This is partly due to the fact that as the exhaust gas is progressively cooled, vapor contained in it begins to condense This condensate, when mixed with sulfur and other compounds in the gas, forms corrosive acids which attack steel surfaces and components in their path Secondly, to recover all the heat contained in the exhaust gases requires that the heat be transferred to a fluid or body at a lower temperature In a power plant, there are practical limitations to the availability of low temperature fluids to which low grade heat might be transferred Consequently, only part of the heat contained in the gas turbine exhaust is recoverable in a heat recovery system

4 2 Function

The function of heat recovery steam generators is to recover the waste heat available in the exhaust gases from a gas turbine and transfer it to the water and steam contained in its tubes The heat recovered is used to generate steam at high pressures and temperatures, which is then used to generate additional power in a steam turbine driven generator

The heat recovery steam generator utilizes the heat energy of the gas turbine exhaust gases to generate steam for the steam-turbine generator HRSGs may be unfired or have supplemental firing available in their ducts The unfired HRSGs accept the exhaust gas from the gas turbine and generate steam at a temperature slightly lower than the gas temperature With supplemental firing, the maximum steam temperature from a HRSG can be controlled independently of the exhaust gas temperature

4 3 Principles

Heat recovery steam generators generating steam at multiple pressure levels are commonly used to maximize heat recovery from the gas turbine exhaust gas as shown in **Figure 4-1** By generating steam at several pressures, the HRSG allows steam to be used for different purposes, and thereby increases the operational flexibility of the plant Depending on the anticipated use for the steam produced in the HRSG, pressure levels can be optimized based on available gas flow rates and temperatures The high pressure steam produced in the HRSG is typically used to drive a steam turbine coupled to a generator, while the intermediate/low pressure steam can supply process steam requirements or be inducted into the steam turbine at the appropriate point in the steam expansion process

Heat recovery steam generators are designed based on an evaluation of a number of parameters For an unfired heat recovery system, the heat contained in the gas turbine exhaust is fixed, and the HRSG output is determined based on the system's effectiveness Increased effectiveness in the HRSG requires an increase in heat transfer area which increases the cost of the HRSG However, the increased cost can only be justified on the basis of increased benefits

The effectiveness of an HRSG is dependent on the heat transfer design and the thermal energy supplied in the exhaust gas from the gas turbine The effectiveness of an HRSG is defined as the ratio of the heat recovered to available heat in the gas turbine exhaust The losses in an HRSG are classified as follows

- Hot gases leaving the stack
- Leakage
- Radiation

447

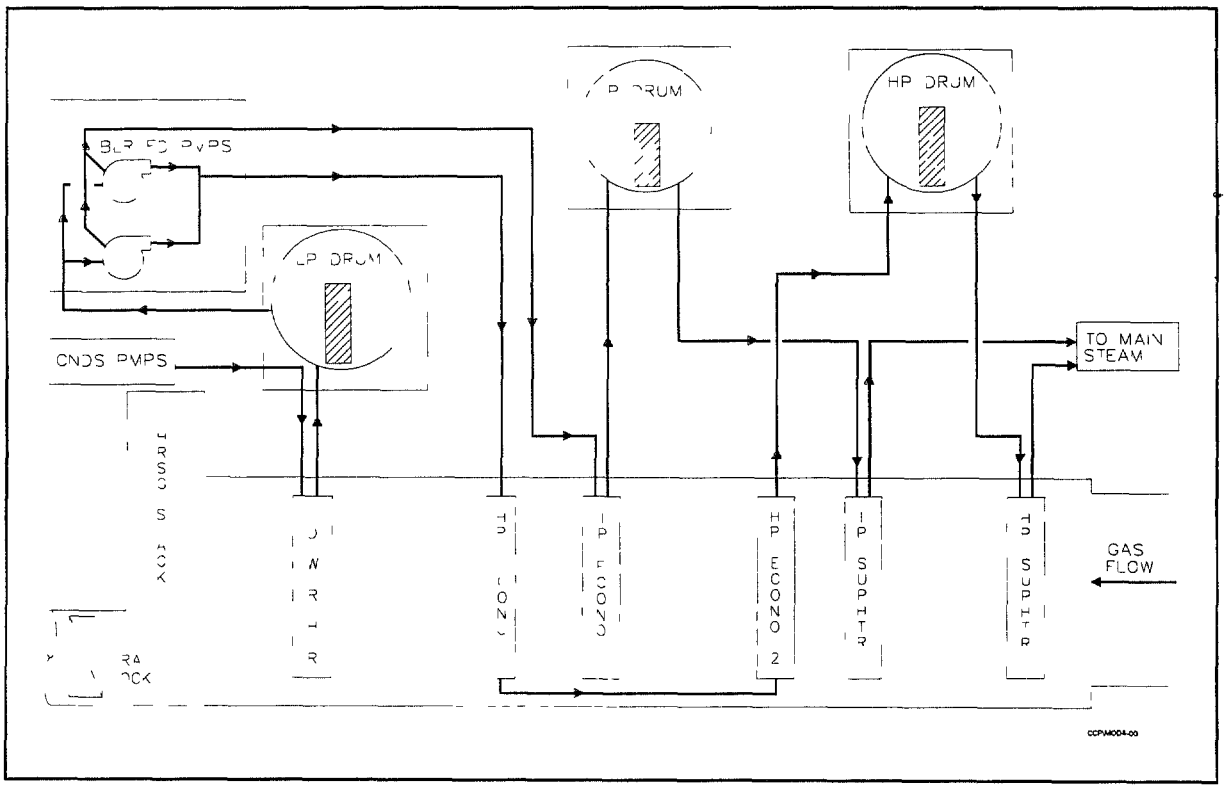

Figure 4-1 Unfired Heat Recovery Steam Generator with Multiple Pressure Levels

148

The effectiveness of a HRSG is dependent upon the gas turbine exhaust energy The gas turbine exhaust energy is defined for particular ambient conditions, a particular load of the gas turbine, and the amount of heat transfer surface available in the HRSG Therefore, the effectiveness of a HRSG varies as the gas turbine operation deviates from design ambient and load conditions

In its simplest form, a typical HRSG consists of three heat exchanger sections - a superheater, an evaporator and an economizer The most simple HRSG may contain only one section, an evaporator producing saturated steam at one pressure More complex HRSGs contain more than a dozen sections - superheaters, evaporators, and economizers - with steam production at three or four different pressures

The parameters which have influence over the HRSG design and performance can be categorized as input, design, and output variables Input variables consist of

- Gas Turbine Exhaust Flow
- Gas Turbine Exhaust Temperature
- Gas Turbine Exhaust Constituents
- Feed Water Temperature
- Stack Temperature
- Blowdown Rate

Design parameters which are either assumed or calculated include

- HRSG Geometry
- Heat Transfer Coefficients
- Gas Leakage
- Thermal Losses

Output variables which influence the HRSG are

- Steam Pressure
- Steam Temperature
- Steam Quality
- Variation in Operating Points

Some of these parameters are discussed in detail below

Gas Turbine Exhaust Flow

Typically, the gas flow through the HRSG is assumed to be the corrected flow for the site condition at base load An accurate measurement of exhaust flow is very difficult, an estimate is made based on the combustion turbine gas (CTG) exhaust velocity or air and fuel measurements In a typical gas turbine, exhaust velocity may vary from 0% to 300% of the average velocity across the cross-section An HRSG designed for the estimated gas flow may not perform as predicted even if design conditions are duplicated

HRSG performance at other combustion turbine gas operating conditions will also differ from those predicted **Figure 4-2** shows the effect of error in the gas flow on steam flow and temperature As shown, the percent change in steam flow is the same as the percent change in gas flow The temperature of steam (for a HRSG producing superheated steam) changes by the same number of degrees as the percentage change in the gas flow, but in the opposite direction, i e , a decrease in combustion turbine gas exhaust flow increases the steam superheat temperature

Gas Turbine Exhaust Temperature

Combustion turbine gas exhaust temperature, like exhaust flow is difficult to measure, and the values used for HRSG design are estimates Temperatures may vary by a margin of about 50°F across an HRSG cross-section due to improper distribution of exhaust gas flow As shown in **Figure 4-3**, both steam flow and steam temperature change in the same direction as a change in combustion turbine gas exhaust temperature About a 5°F change in combustion turbine gas exhaust temperature changes steam flow by 1% and steam temperature by about 2°F

450

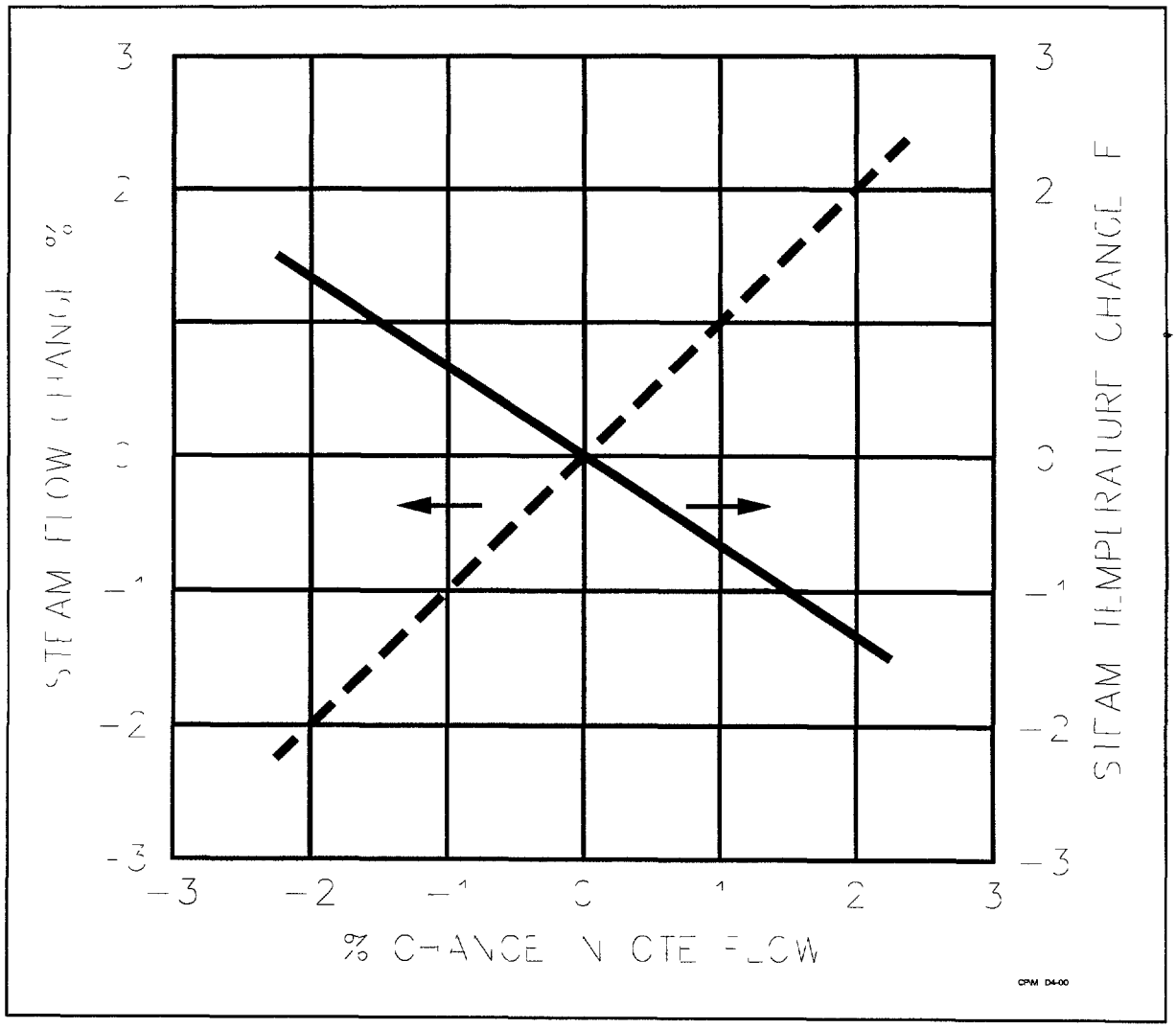

Figure 4-2 Effect of Error in Gas Flow on Steam Temperature

451

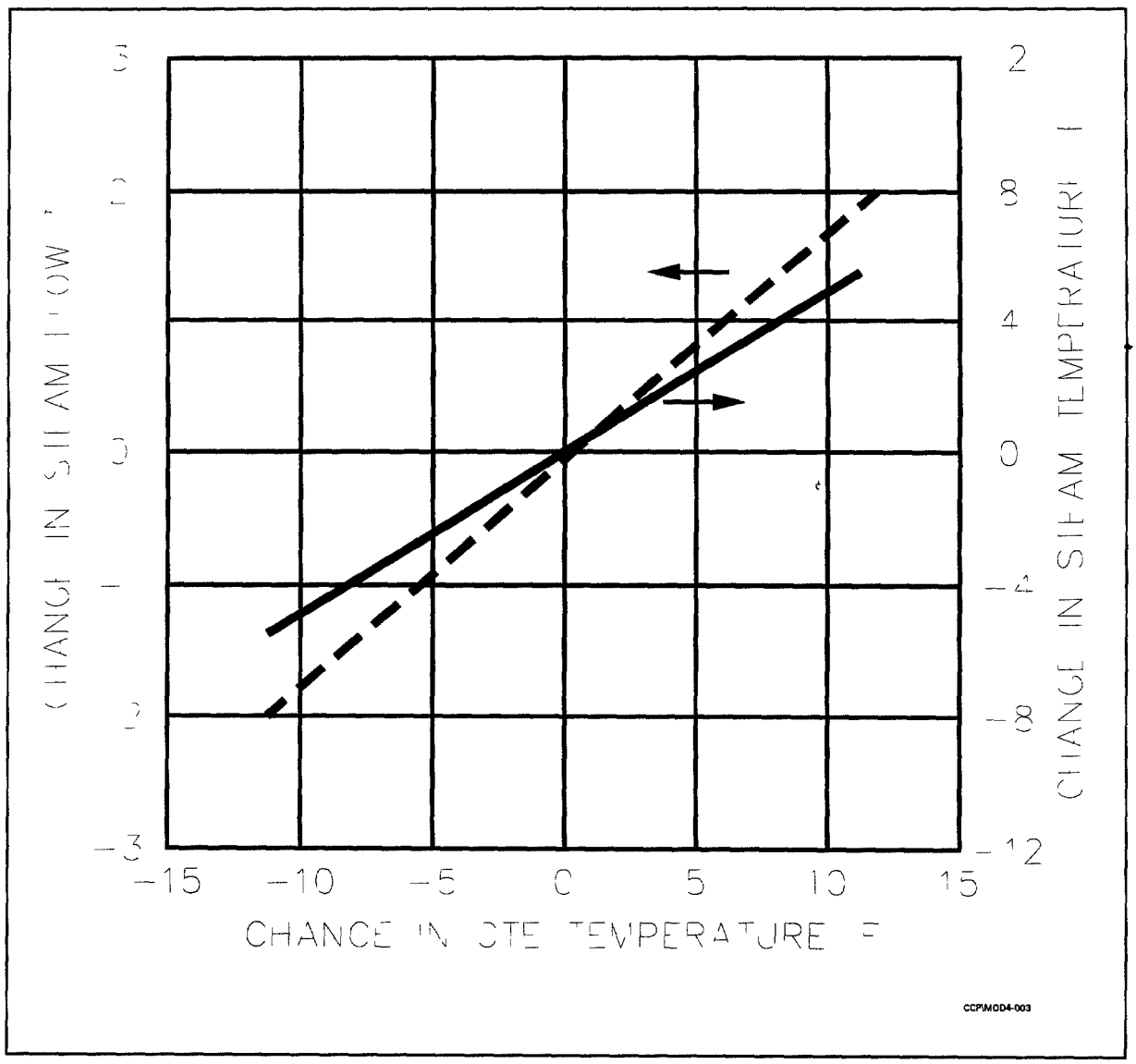

Figure 4-3 Effect of GT Exhaust Temperature on Steam Flow & Steam Temperature

Gas Turbine Exhaust Constituents

Gas turbine exhaust constituents, particularly moisture content are an important factor in the design and performance of an HRSG Higher moisture content increases the gas enthalpy, which results in more available heat for the same temperature difference The heat transfer coefficient is higher for the gas with higher moisture content The net result is that more heat gets transferred from the gas to the water/steam for the same surface area Therefore an accurate measurement of exhaust moisture is necessary when designing the HRSG and predicting its performance, i e , steam flow and temperature **Figure 4-4** shows the steam output variations based on the change in gas moisture content The design case is based on 4% moisture content, which is normal for a gas turbine using natural gas fuel For each 1% increase in moisture content, the steam flow increases by about 0 75%, and the steam temperature decreases by about one half degree

Feedwater Temperature

Change in feedwater temperature has a minimal impact on steam output As shown in **Figure 4-5**, every 10 degree change in feedwater temperature changes steam flow by about 0 1% and steam temperature by about 0 1°F The reasons for the minimal impact on steam output are as follows

- Feedwater heating duty (heat transfer in Btus) is a smaller portion of the total HRSG duty

- The change in feedwater temperature changes the economizer duty and log mean temperature difference (difference in feedwater temperature and combustion turbine gas exhaust temperature) The log mean temperature difference changes in a direction that compensates, to a certain extent, the heat transfer area requirements of the HRSG For example, a 10°F decrease in feedwater temperature increases the HRSG duty by about 4% The same decrease in feedwater temperature of 10°F also increases the log mean temperature difference by about 3% The net result is about a 1% deficiency in economizer surface Since the economizer surface is a smaller part of the total surface, the total surface deficiency is much less, and the effect on steam output is very minimal

45

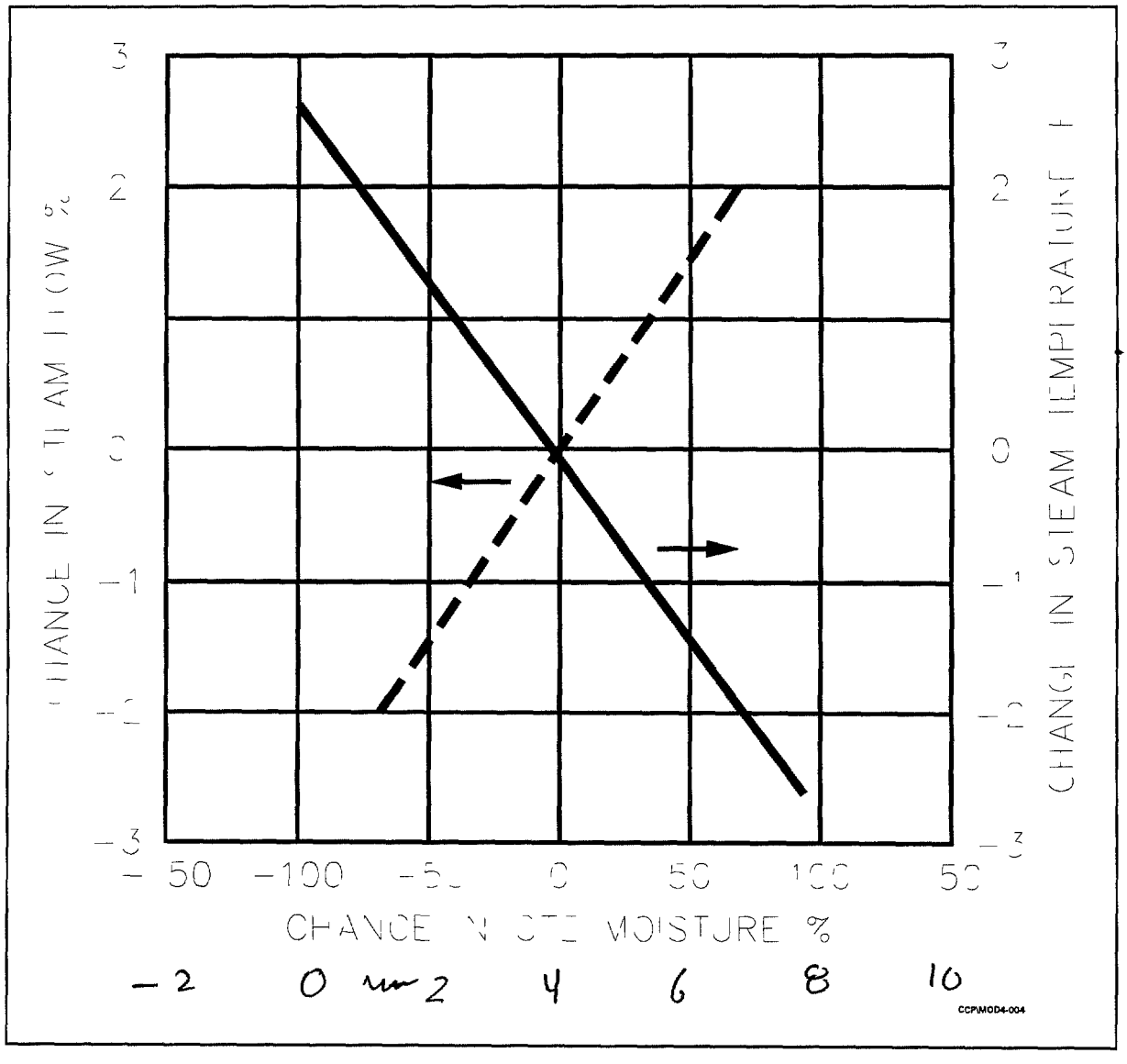

Figure 4-4 Effect of Moisture Content on Steam Output

454

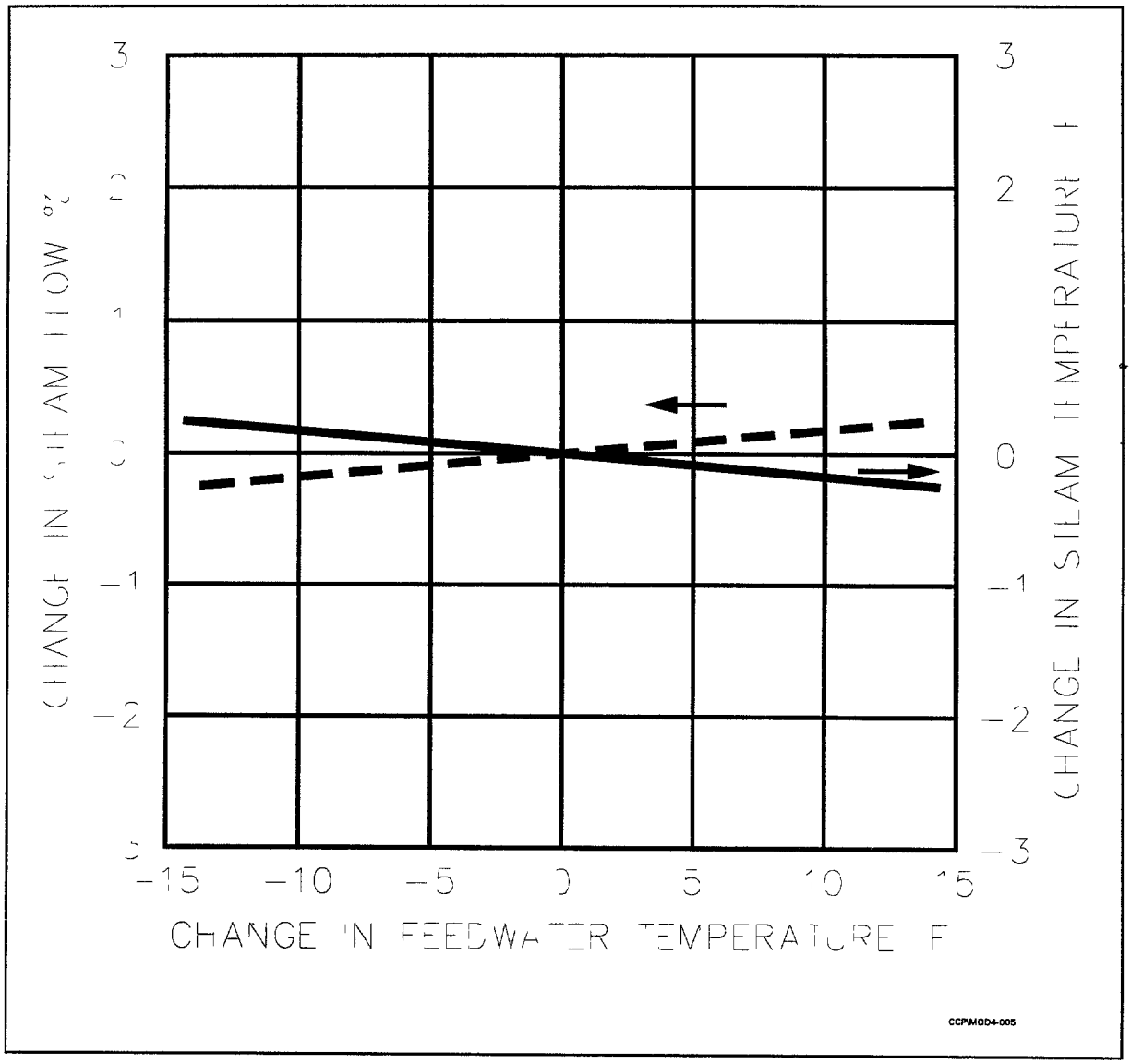

Figure 4-5 Effect of Feedwater Temperature

455

Stack Temperature

efficiency?

The effectiveness of an HRSG is highly dependent upon the stack temperature This is true, since the amount of heat lost through the stack is considerably higher than from all the other losses combined Therefore, the emphasis is to lower the stack temperature as much as possible Lowering of stack temperature is achieved by the following

- Lowering the temperature difference between the exhaust gas and the feedwater

- Decreasing the operating pressure However, steam turbine or process steam needs may preclude this possibility

- Additional lower pressure levels in the HRSG or feedwater heating using stack gas This is a common approach since low pressure steam can be used in several components, such as deaerator heaters, feedwater heaters, etc

Theoretically, it is possible to reduce the stack temperature to within 20 to 25°F of the feedwater inlet temperature A more practical approach is to maintain stack temperature between 280 and 300°F Operating with too low of a stack temperature may have the following detrimental consequences

- The HRSG may require excessive surface area to extract the last BTUs resulting in excessive capital cost

- If sulfur is present in the exhaust gases, then sulfuric acid condensation may cause corrosion of cold end surfaces To avoid the possibility of corrosion, alloy material is needed for these surfaces, which further increases the cost of the HRSG

- There is a possibility of water condensation This is especially true if the gas turbine exhaust contains a large amount of moisture as a result of water injection for NO_x control

456

- Excessive surface area in the HRSG increases the gas pressure drop Additionally, colder exhaust gas could cause a loss of draft in the stack A loss of draft increases the back pressure on the gas turbine

HRSG Geometry

All HRSG systems use fin tubes to increase heat transfer area If the fuel being burned is clean, high fins with high fin densities are used For natural gas, it is normal to use 6 fins per inch, having a height of 0 75 inches For less clean fuels like No 2 oil, it is necessary to reduce the fin height and density to reduce the possibility of soot buildup and excessive fouling Higher fins and fin densities increase the heat flux and tube wall temperatures This affects the selection of tube and fin material, and also the circulation design for natural circulation evaporators Tube size, tube pitch, and tube orientation determine the gas mass velocity Higher mass velocities increase the heat transfer coefficient and gas pressure drop, but also increase the possibility of vibration

An HRSG with a staggered tube arrangement is normally preferred to the in-line tube arrangement This is true since the in-line fin tubes allow gas streams to channel between the lanes and bypass the heat transfer surfaces Tube size and number of passes also determine the steam/water side velocities and pressure drops inside the tubes Generally, a water velocity of 7 feet per second and a steam velocity of 100 feet per second is considered optimum

Gas side pressure drop is critical for optimum gas turbine performance If the pressure drop through the HRSG is higher than expected, gas turbine performance deteriorates Therefore, it is essential that gas side pressure drops be calculated as realistically as possible The gas side pressure drop calculation should include the pressure drop through the duct work and stack as well as the pressure drop through the HRSG

Heat Transfer Coefficient

Predicting heat transfer coefficients with a margin of 10 to 15 percent is acceptable because of the large number of variables involved The margin of error means that it is possible to have a discrepancy of 10 to 15 percent between the actual and required heat transfer areas of an HRSG Providing more heat transfer

457

surface area in the design to compensate for this discrepancy may not solve the problem since, in a multi-section HRSG, providing more area in one section results in less heat available for the next section

The relationships used may predict good values for the heat transfer coefficient with design conditions but may not be accurate for off-design conditions **Figure 4-6** shows the effect of heat transfer coefficient on steam flow A 10% change in predicting the heat transfer coefficient results in about a 0 75% change in steam flow and about a 10°F change in steam temperature However, unlike the effect of other variables which result in higher steam temperatures for lower steam flow, the decrease in heat transfer coefficient produces decreased steam flow at a reduced steam temperature The net result is reduced overall heat transfer

Leakage

The possibility exists that the combustion turbine exhaust gases may leak out of the HRSG instead of flowing over the heat transfer surfaces and through the stack Exhaust gas leakage generally occurs around inspection doors and other openings With a bypass damper and stack, the leakage may become significant This leakage must be factored in during the HRSG design phase The effect of gas leakage, as shown in **Figure 4-7**, is the same as that for decreased exhaust gas flow

Radiation and Other Losses

All boilers lose heat by ambient heat transfer from the boiler surface to the surroundings The HRSG generally loses more heat than conventional boilers This occurs due to increased exposure areas, particularly in the ducts As in the case of other design variables, heat loss should be taken into account when designing the HRSG However, since the gas temperature at off-design points may be different than at base load, the resultant heat loss will be different The effect of heat loss, as shown in **Figure 4-8,** is decreased steam output

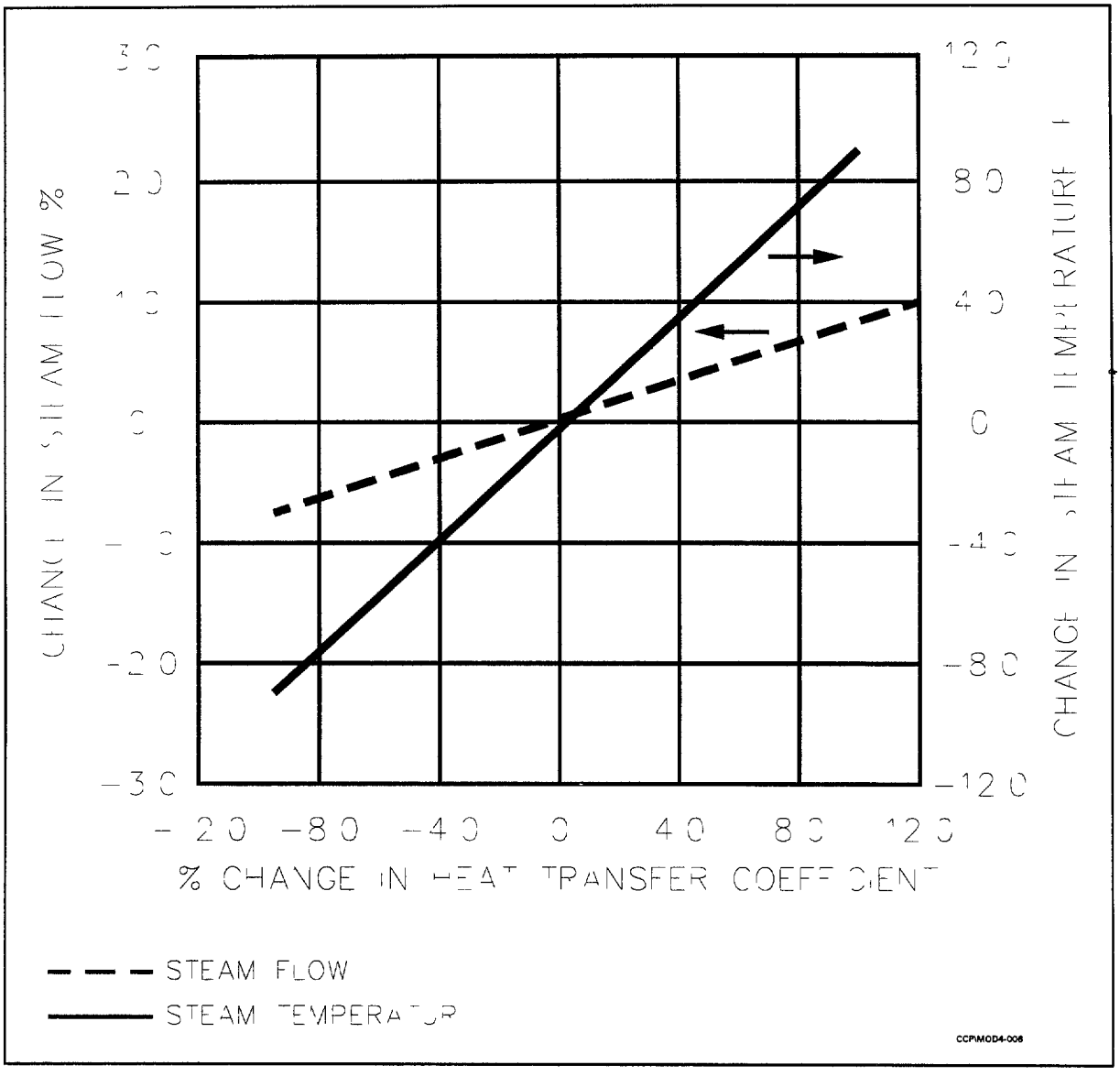

Figure 4-6 Effect of Heat Transfer Coefficient of Steam Flow

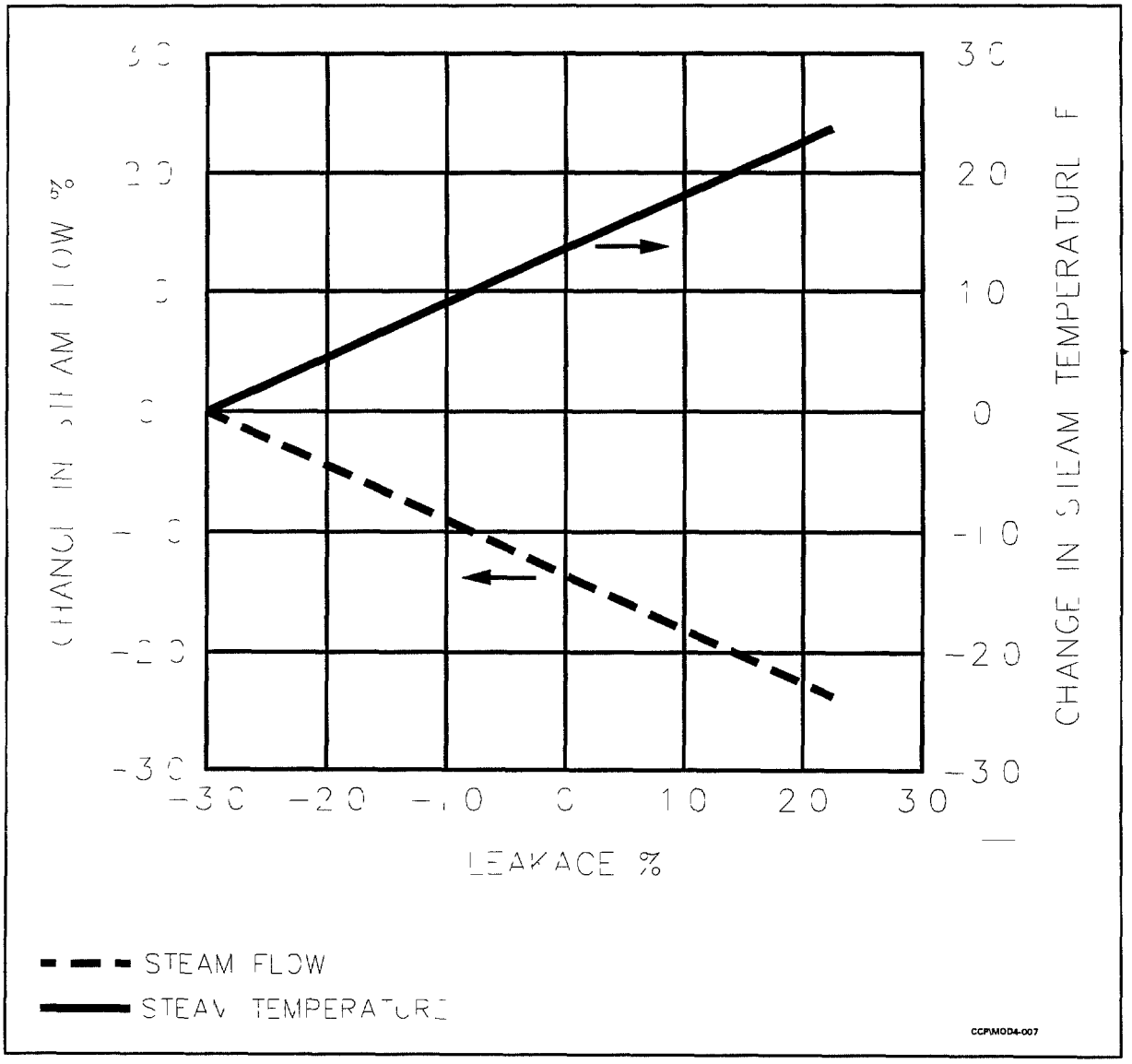

Figure 4-7 Effect of Gas Leakage on Steam Flow and Steam Temperature

460

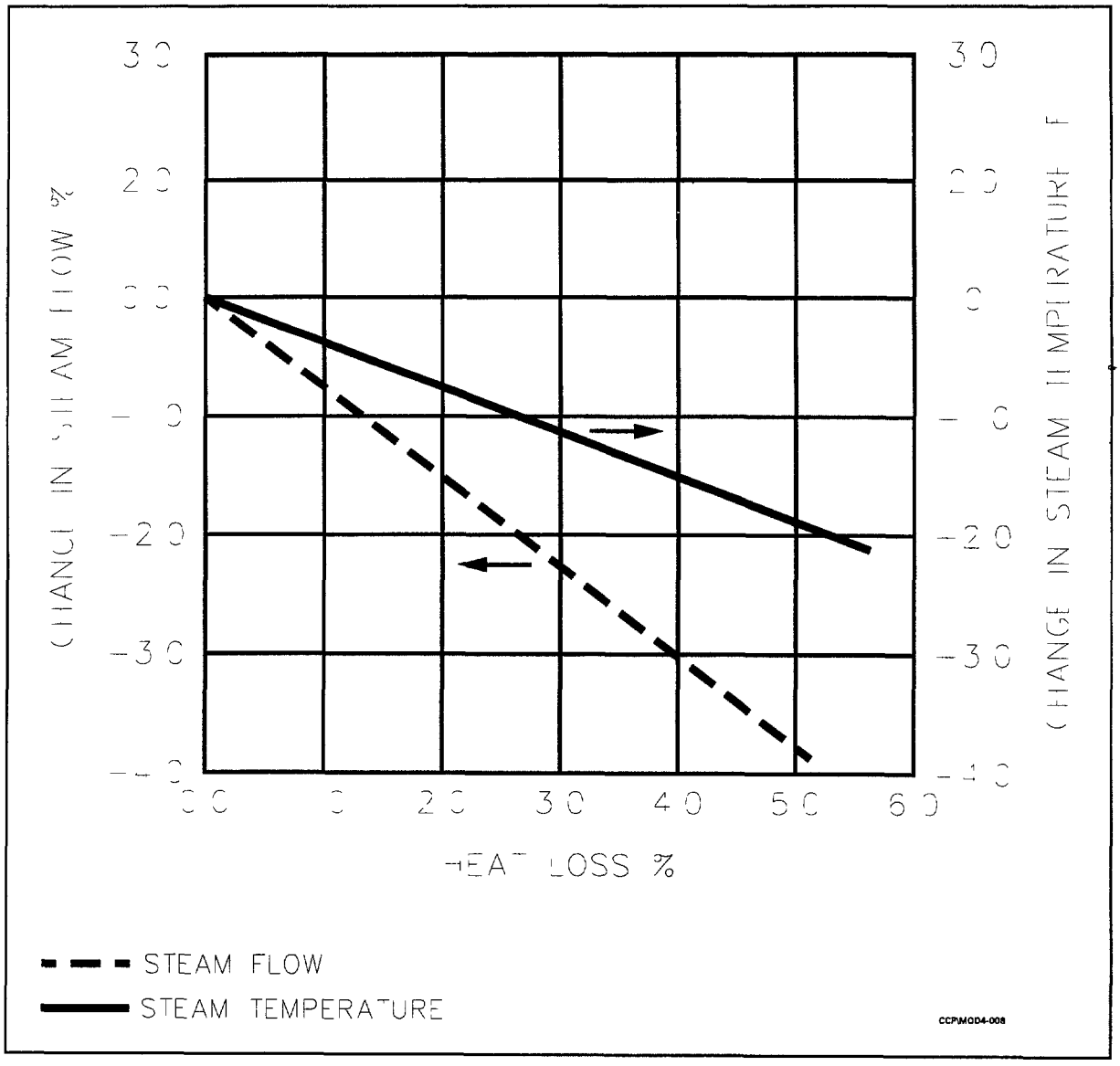

Figure 4-8 Effect of Heat Loss on Steam Output

461

Steam Pressure

Steam pressure is a more significant variable than the other output variables During combined cycle operation, steam flow and temperature are determined by the combustion turbine gas inputs and the effective available surface area Generally, the steam pressure can, and does vary, if steam is supplied to a steam turbine operating in the sliding pressure mode Unless steam pressure changes are extreme, the steam flow and steam temperature changes are not significant

4 4 HRSG Flowpaths

There are a vast number of HRSGs available for purchase on the commercial market This section describes the flowpaths associated with a natural circulation, triple pressure, unfired type HRSG designed to recover waste heat from a combustion turbine The HRSG is designed to operate in the sliding pressure mode, i e , steam flow to the turbines is unrestricted and steam pressure is essentially a function of the gas turbine exhaust gas flow rate and temperature

4 4 1 Low Pressure Steam Generator Section

Condensate is supplied to the low pressure (LP) steam generation section from the Condensate System through level control valves The primary flow of condensate is normally routed to the HRSG feedwater heater through motor-operated isolation valves en route to the deaerator and steam drum During low load operation, the condensate flow passes through a motor-operated bypass valve and is routed directly to the deaerator, bypassing the feedwater heater Inside the deaerator, the temperature of the water is further increased and non-condensible gases are removed

Once deaerated, the feedwater flows into the LP steam drum and is then routed to the bottom of the LP evaporators through the downcomers The boiler feed pumps take suction on the LP drum from one of the downcomer headers The water flows upward through the evaporator tubes by natural circulation and saturated steam is formed in the tubes as energy from the combustion turbine exhaust is absorbed The saturated, liquid/vapor mixture flows upward into the LP steam drum where the steam is separated and routed to the deaerator to heat the incoming condensate during the deareation process

462

4 4 2 Intermediate Pressure Steam Generator Section

Feedwater is supplied to the intermediate pressure (IP) steam generation section from the interstage takeoff of the boiler feed pumps through level control valves From the level control valves, the IP feedwater is divided into two flowpaths through motor-operated isolation valves as it enters the IP economizer The first flowpath routes feedwater through the entire economizer which is only used when steam production typically increases above 25% of maximum continuous rating The second flowpath enters the midpoint of the economizer, combining with the first flowpath, and is used during low load operation Once through the economizer, the preheated feedwater enters the IP steam drum

Downcomers route the cooler water from within the IP steam drum to the bottom of the IP evaporators From the bottom of the IP evaporator, the water flows upward through the evaporator tubes by natural circulation Saturated steam is formed in the tubes as energy from the combustion turbine exhaust is absorbed The intermediate pressure, saturated, liquid/vapor mixture flows upward into the IP steam drum and passes through a series of steam separators The saturated water returns to the IP evaporator, while the steam vapor rises out of the drum and is routed to the IP superheater Steam exiting the IP superheater enters the IP steam system through a motor-operated stop check valve and a motor-operated steam supply line isolation valve

4 4 3 High Pressure Steam Generation Section

below?

Feedwater is supplied to the high pressure (HP) steam generation section from the discharge of the boiler feed pumps through level control valves Typically, when steam production increases above 25% of maximum continuous rating, feedwater is routed to the HP economizers through motor-operated isolation valves During load low operation, one HP economizer is isolated Once through the economizers, the preheated feedwater enters the HP steam drum

two HP econ's? divergent? vs. Parallel

Similar to the IP steam generation section, downcomers route the cooler water from within the HP steam drum to the bottom of the HP evaporators The high pressure, saturated liquid/vapor mixture flows upward into the HP steam drum and

463

passes through a series of steam separators Steam vapor rises out of the steam drum and is routed to the low temperature, high pressure, superheater Once superheated, the HP steam normally flows through an attemperator where it is cooled by the introduction of feedwater The steam is then routed to the high temperature, high pressure superheater where its temperature and superheat are further increased Next, the superheated steam is routed to the HP steam header in the main steam system through a motor-operated stop check valve and a motor-operated steam line isolation valve

S.H. is two part

4 5 HRSG Major Components

4 5 1 Low Pressure Steam Generation Section

The LP steam generation section supplies preheated, deaerated feedwater to the boiler feed pumps for use in the IP and HP steam sections The LP section takes advantage of the remaining thermal energy of the exhaust gas prior to entering the exhaust stack Each component of the LP steam generation section serves a specific function

- LP Feedwater Heater - Provides a heat transfer surface for the preheating of LP feedwater prior to entering the deaerator

- Deaerator - Utilizes steam to remove non-condensible gases from the feedwater prior to entering the LP steam drum

- LP Steam Drum - Provides a source of preheated, deaerated feedwater to the boiler feed pump suction at a positive head pressure and acts as a vapor separation point for LP steam

- LP Evaporators - Provides a heat transfer surface for the production of LP steam for use in the deaerator

Descriptions of the low pressure steam generation section major components are provided in the paragraphs below

464

Low Pressure Feedwater Heater

The LP feedwater heater is located in the aftermost section of the HRSG, and is of the finned tube construction For this type of HRSG, the LP feedwater heater consists of two banks of heat exchanger tubes In this arrangement, each bank makes two passes, down and then back up, through the combustion turbine exhaust gas path

Deaerator

The deaerator for this type of HRSG is mounted on top of the LP steam drum The major components of the deaerator are spray nozzles and deaerating trays The spray nozzles distribute the incoming feedwater into the deaerator in a thin film spray allowing steam to scrub the non-condensible gases from the feedwater The scrubbed feedwater falls into the deaerating trays which increase the surface area of the water, providing for the efficient release of non-condensible gases

The deaerator is normally equipped with the following external connections

- LP Steam - Provides deaerating steam from the LP steam drum during normal operation
- Pegging Steam - Provides supplemental deaerating steam from a Process or Auxiliary Steam System
- Vacuum Breaker - Prevents a vacuum from occurring inside the deaerator during a loss of pegging steam
- Orifice Vent - Provides for continuous purging of non-condensible gases from the top of the deaerator
- Water Outlet - Provides drainage of the deaerated water into the LP steam drum

465

LP Evaporator

The LP evaporator is located in the LP section of the HRSG The LP evaporator is typically of finned tube construction and consists of heat exchanger tube rows With this arrangement, each tube row makes one pass upward through the combustion turbine gas path

LP Steam Drum

The LP steam drum (**Figure 4-9**), located on top of the LP section of the HRSG, is typically a horizontal welded vessel Each end of the drum is equipped with hinged manhole covers for maintenance access The LP steam drum is normally sized to provide the following

- A minimum capacity of 1 minute at base load, based on volume, between the Low Level Alarm and the Low-Low Level Trip

- A surge volume adequate, with the drum at the High Level Alarm setpoint, to accommodate the swell resulting from a 25% increase of combustion turbine load in a period of 1 minute without the level increasing to the High-High Level alarm setpoint

The LP steam drum is normally equipped with the following connections

- Two gauge glasses
- Level transmitters
- Safety valves
- Local pressure indicators
- Pressure transmitters
- Steam overpressure dump to condenser
- Steam risers from the LP evaporator
- Downcomers to the LP evaporator lower headers
- LP steam discharge to the deaerator
- Boiler feed pump minimum flow recirculation lines
- Process condensate return lines

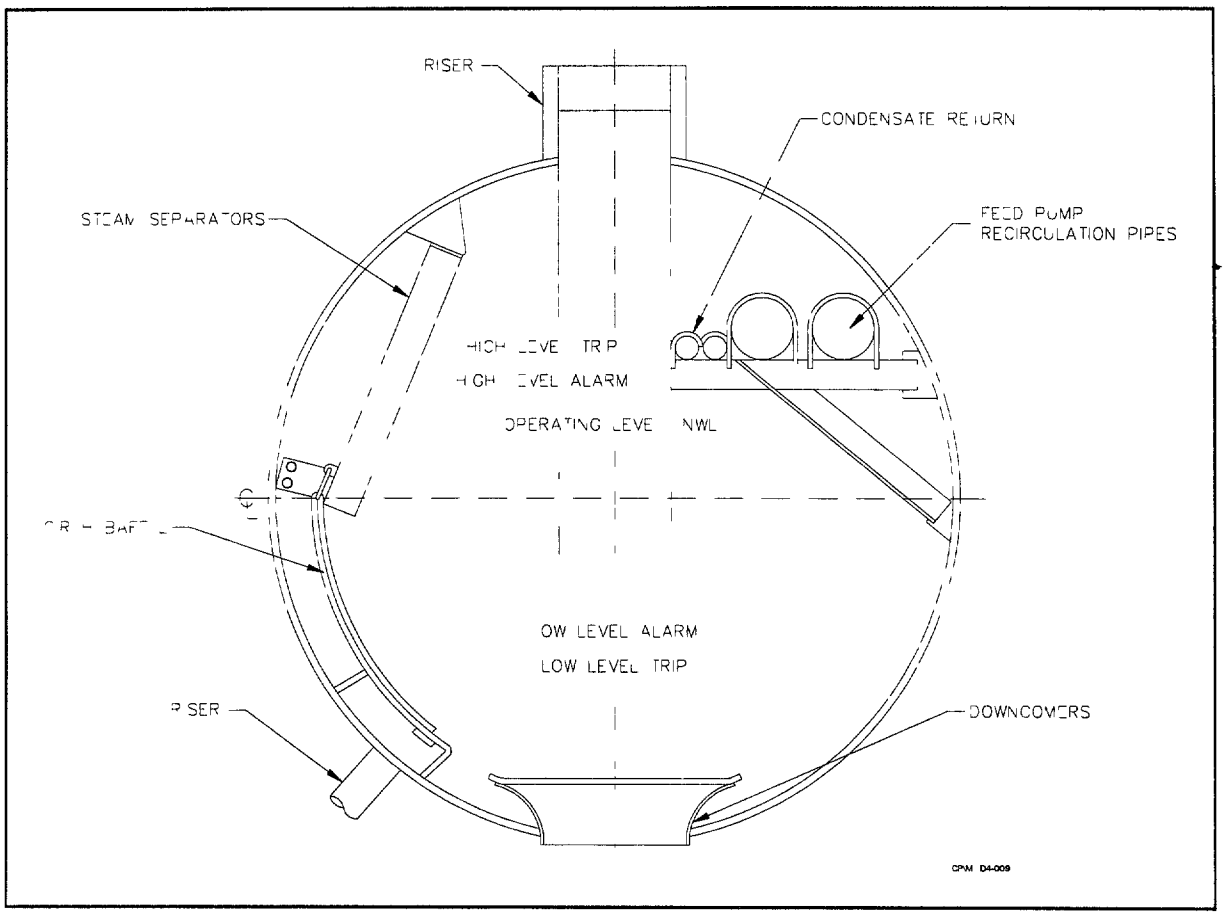

Figure 4-9 Low Pressure Steam Drum Cross Section

467

Boiler feed pump recirculation and condensate return water is supplied directly to the drum through internal distribution pipes Preheated, deaerated water is supplied to the LP drum from the deaerator The cooler water is routed to the lower header of the LP evaporator through the downcomers The water flows upward through the evaporator tubes where it is heated by the hot exhaust gases As the water is heated, it expands, becomes less dense, rises, and flows into the LP drum The cooler, more dense, water from the downcomers and the lower headers flows in to take the place of the rising heated water creating natural circulation in the low pressure section

The water/vapor mixture flowing into the LP drum from the evaporator riser is directed inside the drum by an internal, circumferential girth baffle The water/vapor mixture passes through the steam separators which causes the steam-free water to return to the bottom of the drum to mix with the feedwater while the steam is directed to the top of the drum and into the deaerator

LP Steam Generation Section Operation

Operation of the LP steam generation section of the HRSG consists of the following

- Operation of the feedwater heater
- Maintaining proper drum level
- Maintaining proper steam pressure
- Operation of the LP section vents and drains

Operation of the LP Feedwater Heater

Condensate flow to the low pressure feedwater heater is controlled by the combined operation of the following motor-operated valves (refer to **Figure 4-10**)

- Feedwater Heater Inlet Valve
- Feedwater Heater Bypass Valve
- Feedwater Heater Outlet Valve
- Feedwater Heater Outlet Equalizing Valve

465

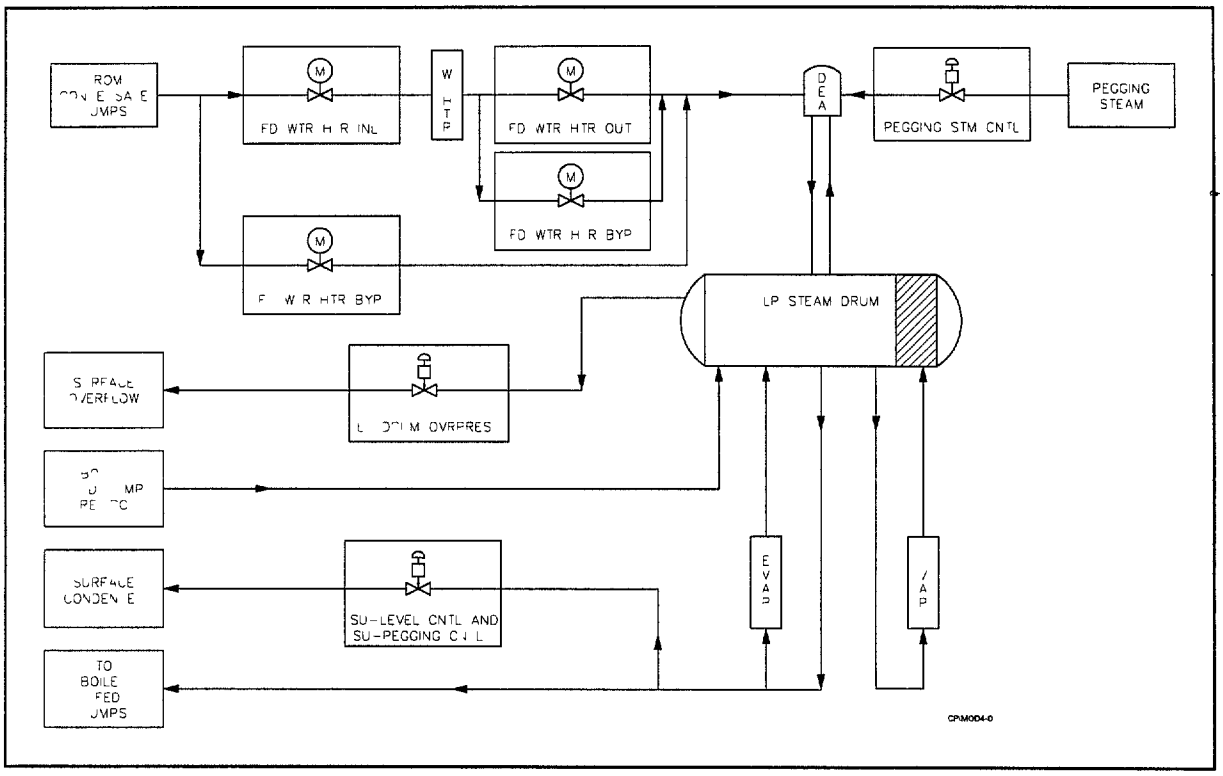

Figure 4-10 LP Feedwater Heater Control

469

The feedwater heater motor operated valves are normally equipped with three operating modes, AUTO, MANUAL, or TAGOUT When all of the valves are operated in AUTO, condensate flow through the heater can be designated as NORMAL or BYPASS In the BYPASS mode, the bypass valve automatically opens and the inlet, outlet, and equalizing valves close In this configuration, water flow is diverted around the LP feedwater heater and directly into the deaerator The mode of operation is used during startup of the HRSG to prevent steaming of the LP feedwater heater Once the combustion turbine is operating at approximately 50% load and the HRSG is generating steam, the operation of the LP feedwater heater is switched to NORMAL

In the NORMAL mode, water flow is completely through the LP feedwater heater When NORMAL is selected, the equalizing valve opens, and after a preset time delay, the inlet and outlet valves open The time delay allows for the pressure accumulated in the feedwater heater to be released into the feedwater flowpath Once the inlet and outlet valves are open, the bypass valve closes

LP Drum Level

During low load and startup conditions, the LP steam drum level is controlled by single element control, drum level only When the feedwater flow increases to greater than 25% of base load, drum level automatically transfers to three element control, 1) drum level, 2) makeup feedwater flow, and 3) cumulative total flow of the boiler feed pump loads

The drum level control loop receives input signals from the flow, level, and pressure transmitters and uses these signals to generate drum level alarms and to control the position of the LP drum level control valves An excessively high drum level submerges the steam separator screens inhibiting the flow of steam into the deaerator An excessively low drum level condition results in the loss of suction to the feedwater pumps, resulting in a boiler feed pump and unit trip condition

470

LP Section Steam Pressure Control

The LP steam pressure is maintained to ensure proper removal on non-condensible gases from the feedwater in the deaerator Excessive LP drum pressure is compensated for by opening an overpressure drum control valve Inadequate steam pressure is compensated for by the admission of pegging steam to the deaerator through a motor-operated valve

LP Vent and Drain Valves

The LP steam generation section of the HRSG is normally equipped with the following motor-operated vent and drain valves

- Feedwater Heater Vent Valve
- Feedwater Heater Drain Valve
- Deaerator Vent Valve
- LP Drum Vent Valve
- LP Evaporator Drain Valve

The vent and drain motor-operated valves are normally operated from a remote location such as the control room A typical arrangement for the HRSG LP vent and drains are shown on **Figure 4-11**

The LP steam generation section of the HRSG is also normally equipped with temperature elements installed at various locations The temperature elements provide input for monitoring purposes During startup and shutdown, the temperature difference across each component is monitored to ensure uniform heat transfer If an excessive temperature difference is noted, changes in combustion turbine load should cease until the temperature has equalized

491

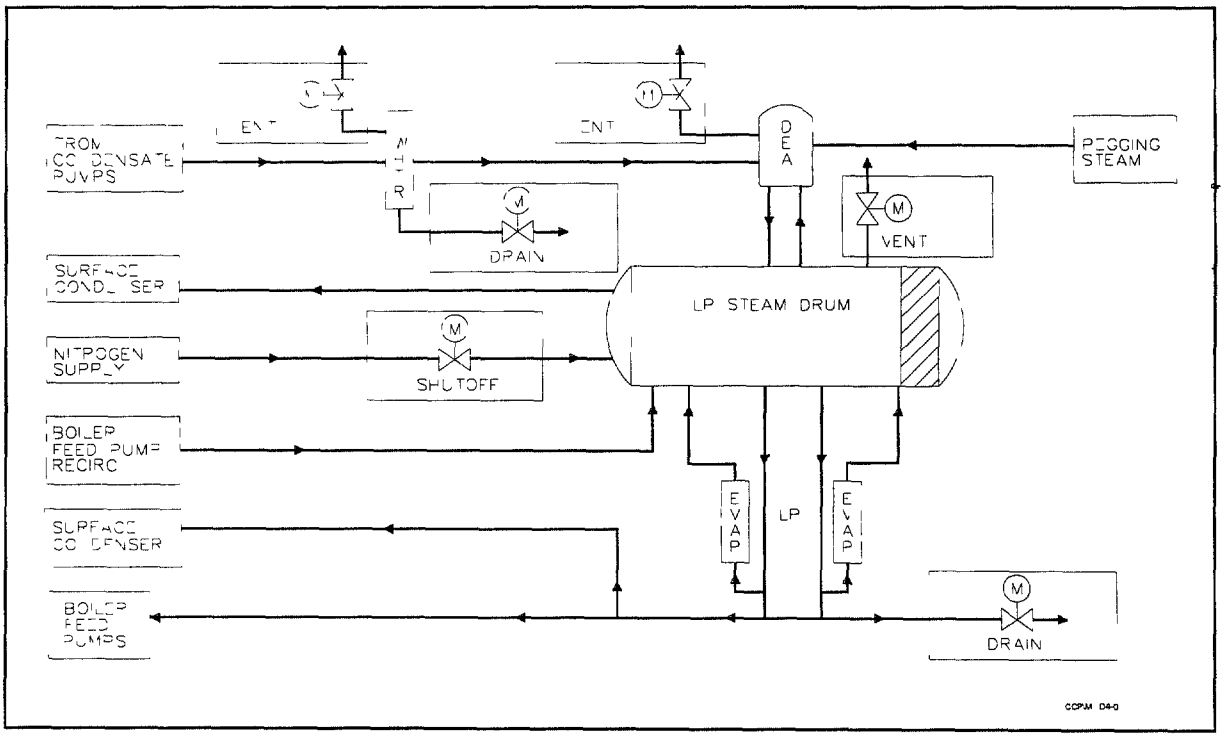

Figure 4-11 LP Steam Generation Section Vents and Drains

4 5 2 Intermediate Pressure Steam Generation Section

The IP steam generation section supplies dry, superheated steam to the steam turbine and to the Process or Auxiliary Steam Systems Each component of the IP steam generation section serves a specific function

- IP Economizer - Provides a heat transfer surface for the preheating of IP feedwater prior to entering the steam drum
- IP Steam Drum - Serves as a reservoir for preheated IP feedwater and as a vapor separation point for the IP steam
- IP Evaporators - Provides a heat transfer surface for the production of IP steam
- IP Superheater - Provides a heat transfer surface for the superheating of IP steam

Descriptions of the IP steam generation section major components are provided in the paragraphs below

IP Economizer

The IP economizer is located in the IP section of the HRSG The IP economizer is typically of finned tube construction The IP economizer is made up of two sections, each at different locations within the HRSG The first section consists of four tube rows The second section consists of a single row of six tubes located further upstream in the exhaust gas path

IP Evaporator

The IP evaporator is located in the IP section of the HRSG The IP evaporator is typically of finned tube construction The IP evaporator consists of ten rows of tubes Each row makes a single pass upward through the combustion turbine gas exhaust path

IP Steam Drum

The IP steam drum (**Figure 4-12**) is located on top of the IP section of the HRSG The IP steam drum is a horizontal vessel equipped with two, hinged manhole covers The IP steam drum is sized to provide the following

- A minimum capacity of 1 minute at base load, based on the volume of water between the Low Level Alarm and Low-Low Level Trip

- A surge volume adequate, with the drum at the High Level Alarm setpoint, to accommodate the swell resulting from a 25% increase of combustion turbine load in a period of 1 minute or with a system pressure decrease of 50 psig without carry-over or a level increase to the High-High Level Trip setpoint

The IP steam drum is normally equipped with the following connections

- Two gauge glasses
- Level transmitters
- Safety valves
- Local pressure indicators
- Pressure transmitters
- IP steam discharge to the IP superheater
- Steam risers from IP evaporators
- Downcomers to the IP evaporator lower headers
- Feedwater inlet pipe from the IP economizer
- Chemical addition line
- Steam sample line

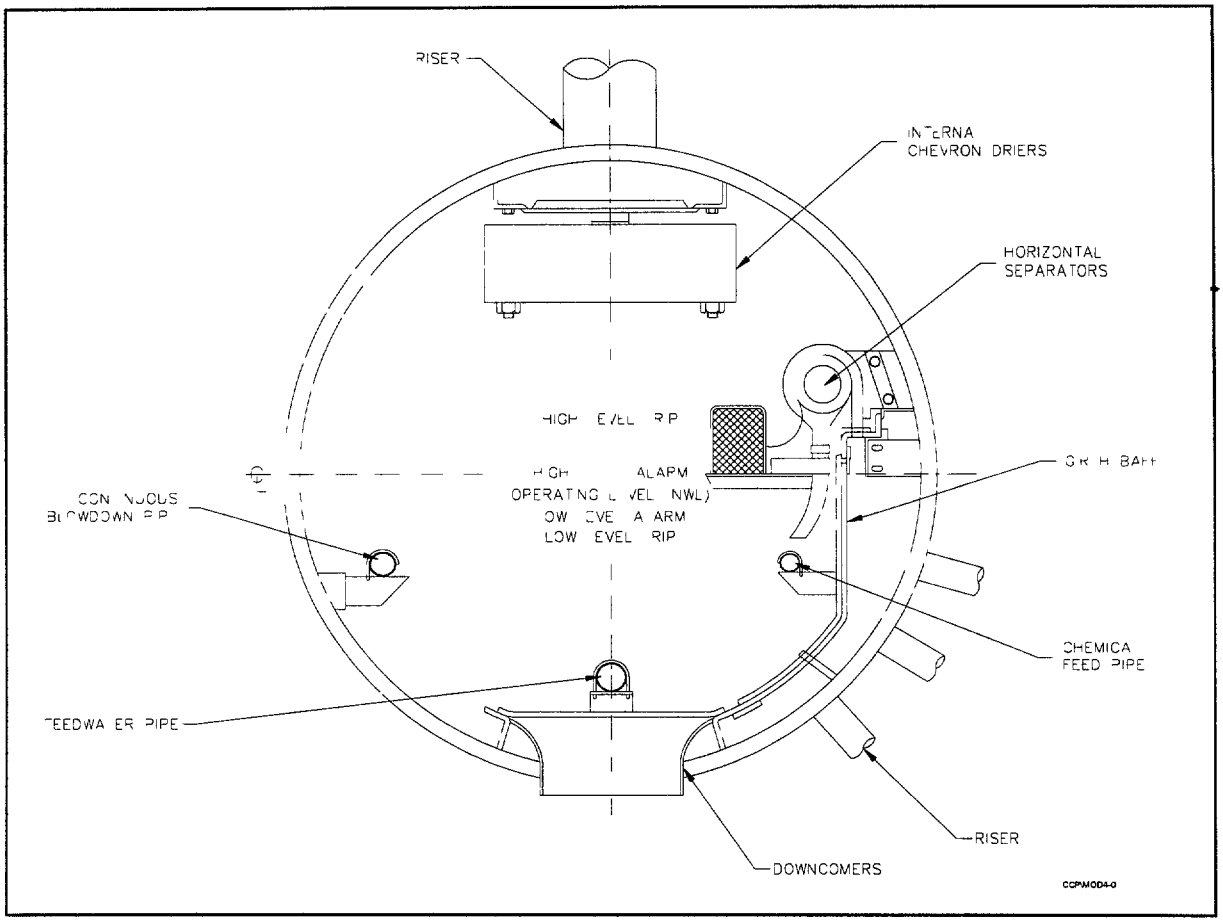

Figure 4-12 IP Steam Drum

Preheated, deaerated water is supplied to the IP drum from the IP economizer An internal feed pipe distributes the feedwater across the length of the drum The incoming feedwater mixes with the existing boiler water in the drum and is directed by downcomers to the IP evaporator lower headers The water flows upward through the evaporator tubes where it is heated to a steam and water mixture by the hot turbine exhaust gases, the percentage of steam increasing towards the IP steam drum As the steam and water mixture is heated, it expands, becomes less dense, rises, and flows into the IP steam drum The cooler, more dense, water from the downcomers and the lower headers flows in to take the place of the rising heated water, creating natural circulation in the intermediate pressure section The lower and upper headers of the evaporator, as well as the respective tubes, are located directly in the exhaust gas flowpath Riser tubes carry the steam/water mixture from the upper headers to the IP steam drum

The steam and water mixture flowing into the IP drum from the evaporator risers is directed inside the drum by circumferential girth baffles to the steam separators located along the riser side of the drum The steam and water mixture passes through the steam separators which causes the steam-free water to return to the bottom of the drum and mix with the feedwater The steam is directed to the top of the drum to chevron driers The steam passes through the chevron driers where any remaining moisture and impurities are removed Once through the driers, the steam flows into the dry box located in the top of the drum The dry box routes the dry saturated steam to the IP superheater

IP Superheater

The IP superheater is typically of finned tube construction The IP superheater consists of a single row of heat exchanger tubes located in the IP section of the HRSG The single row of tubes makes one pass upward through the combustion turbine gas exhaust path

IP Steam Generation Section Operation

Operation of the IP steam generation section of the HRSG consists of the following

- Operation of the IP economizer
- Drum level control
- Monitoring IP Superheater outlet
- Operation of the IP vent and drain valves

Operation of the IP Economizer

Feedwater flow to the IP economizer is controlled by the operation of the motor-operated inlet and bypass valves (**Figure 4-13**) The economizer inlet and bypass valves are normally designed with three modes of operation, AUTO, MANUAL, or TAGOUT When both valves are placed in the AUTO mode, feedwater flow through the economizer can be designated as NORMAL or BYPASS

During startup of the HRSG, the economizer inlet and bypass valves are placed in AUTO, and the economizer is operated in the BYPASS mode Once selected, the bypass valve automatically opens and the inlet valve automatically closes In this configuration, water flow is diverted around the majority of the IP economizer tubes, passing only through the last segment of the economizer This flowpath prevents the economizer from steaming during HRSG startup

When IP steam drum flow increases to 25% of rated steam flow, the economizer can be switched to the NORMAL mode In the NORMAL mode, water flow is completely through the IP economizer, the inlet valve is open, and the bypass valve is closed

During shutdown of the HRSG, the economizer is normally operated in the NORMAL mode as combustion turbine load is decreased Before IP steam drum flow decreases to 20% of rated steam flow, the economizer is switched to the BYPASS mode

477

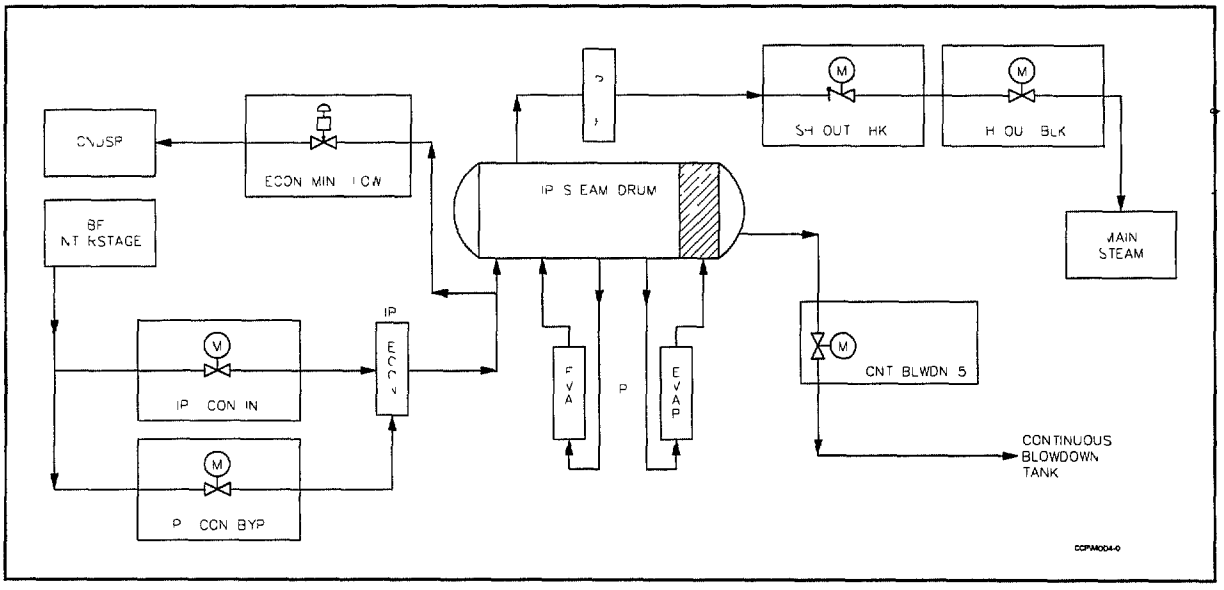

Figure 4-13 IP Feedwater Valve Arrangement

Regardless of IP steam usage, a continuous flow of feedwater through the IP economizer is required to maintain a minimum IP feedwater temperature Because of the minimum IP feedwater temperature requirement, a minimum flow control valve is provided to ensure a minimum flow of feedwater through the economizer

IP Drum Level

Feedwater is supplied to the IP steam drum by the boiler feed pumps During low load and startup conditions, drum level is controlled using the single element mode, drum level only When the steam flow from the drum increases above 50% of rated flow, the economizer minimum flow valve is closed, and drum level is maintained using three element control, 1) IP feedwater flow, 2) IP drum level, and 3) IP steam flow

Maintaining proper steam drum level is a critical function and can not be overstressed An excessively high drum level can flood the moisture separators located within the steam drum This can result in moisture carryover into the IP superheater and possibly a turbine trip An excessively low drum level can result in decreased steam output, overheating of the economizer, evaporator, and superheater tubes and a combustion turbine trip

IP drum pressure is a result of drum level combined with the generation of steam in the IP evaporators The IP drum pressure fluctuates with changes of load demands on the IP steam system During a sudden load increase, drum pressure decreases This results in a false high level condition known as "swell " During a sudden decrease of steam demand, steam drum pressure increases and results in a false low level condition known as "shrink"

IP Superheater Outlet

Steam from the IP superheater may be supplied to the IP steam header for use as process steam and to the Auxiliary Steam System The control of steam flow from the IP superheater outlet is through a motor-operated stop check valve and a motor-operated steam stop valve

During startup of the HRSG, the motor operators for the stop check valve and the steam stop valve are placed in the OPEN position before the IP steam drum begins to develop steam pressure As the HRSG heats up, steam flows through the stop check valve and begin to warm the IP steam header During this period, the combustion turbine is maintained at minimum load

If the steam header is already pressurized by an auxiliary boiler or another unit prior to HRSG startup, the disk of the stop check valve remains seated due to the already pressurized steam header Once the IP steam drum pressure increases to a pressure equal to the IP steam header, the stop check valve slowly opens and steam flows from the steam drum through the IP superheater

IP Drains and Vents

The IP steam generation section of the HRSG is normally equipped with the following motor operated vent, drain, and continuous blowdown valves (**Figure 4-14**)

- IP Economizer Inlet Vent Valve
- IP Economizer Drain Valve
- IP Evaporator Drain Valve
- IP Continuous Blowdown Valve
- IP Drum Vent Valve
- IP Drum Outlet Vent Valve
- IP Superheater Outlet Drain Valve
- IP Superheater Vent Valve

Each of the superheater and steam drum vent and drain valves are normally operated remotely through the distributed control system During startup, the drum vent valve is closed when IP steam drum pressure increases to approximately 30 psig The superheater vent valve remains open to maintain steam flow through the tubes to prevent overheating The superheater vent valve is closed once the IP steam generation section is on-line and providing sufficient steam flow

150

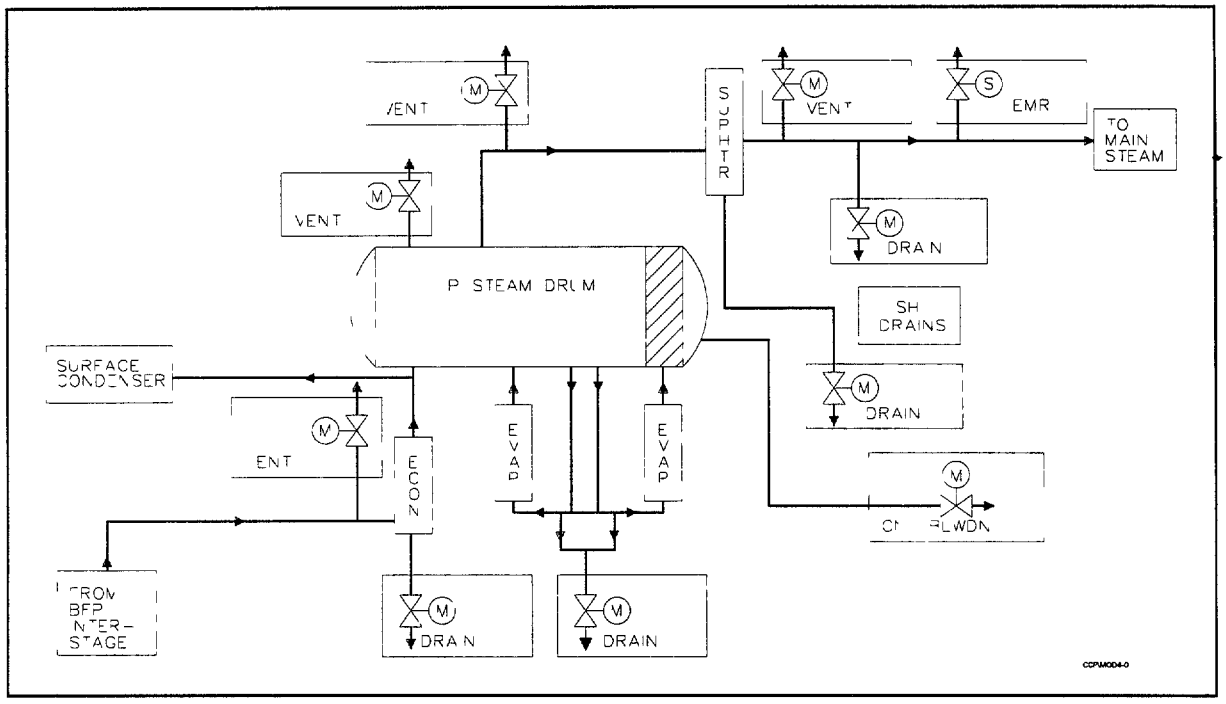

Figure 4-14 IP Steam Generation Section Vents and Drains

481

4 5 3 High Pressure Steam Generation Section

The HP steam generation section supplies dry, superheated, high pressure steam to the steam turbine Each component of the HP steam generation section serves a specific function

- HP Economizers - Provide a heat transfer surface for the preheating of HP feedwater prior to entering the HP steam drum
- HP Steam Drum - Serves as a reservoir for the HP feedwater and as a vapor separation point for the HP steam
- HP Evaporators - Provides a heat transfer surface for the production of HP steam
- Low Temperature Superheater - Provides a heat transfer surface for the preliminary superheating of HP steam
- HP Desuperheater - Provides a means of controlling HP steam temperature exiting the high temperature HP superheater
- High Temperature HP Superheater - Provides a heat transfer surface for the final stage of superheating the HP steam

Descriptions of the high pressure steam generation section major components are provided in the paragraphs below

HP Economizers

The typical HRSG presented is equipped with two HP economizers The HP economizers are typically of finned tube construction Both HP economizers consist of heat exchanger tube rows located within the HP section of the HRSG

HP Evaporator

The HP evaporator is located within the HP section of the HRSG The HP evaporator is typically of the finned tube construction The HP evaporator consists of rows of heat exchanger tubes Each row makes a single pass upward through the combustion turbine exhaust gas path

HP Steam Drum

The HP steam drum (**Figure 4-15**) is located atop the HP section of the HRSG The HP steam drum is a horizontal vessel equipped with two, hinged manhole covers The HP steam drum is sized to provide the following

- A minimum capacity of 1 minute at base load, based on the volume between Low Level Alarm and Low-Low Level Trip
- A surge volume adequate, with the drum at the High Level Alarm setpoint, to accommodate the swell resulting from a 25% increase of combustion turbine load in a period of 1 minute with a system pressure decrease of 50 psig without carry-over or a level increase to the High-High Level Trip setpoint

The HP steam drum is normally equipped with the following connections

- Two gauge glasses
- Level transmitters
- Safety valves
- Local pressure indicators
- Pressure transmitters
- HP steam discharge to the HP superheater
- Steam risers from HP evaporators
- Downcomers to the HP evaporator lower headers
- Feedwater inlet pipe from the HP economizer
- Continuous Blowdown Line
- Chemical addition line
- Steam sample line

Preheated, deaerated water is supplied to the HP drum from the HP economizer An internal feed pipe distributes the feedwater across the length of the drum The incoming feedwater mixes with the existing boiler water in the drum and is directed by downcomers to the HP evaporator lower headers The water flows upward through the evaporator tubes where ~~it is heated to a~~ steam ~~and water mixture~~ is produced by the hot turbine exhaust gases, the percentage of steam increasing towards the HP steam drum

483

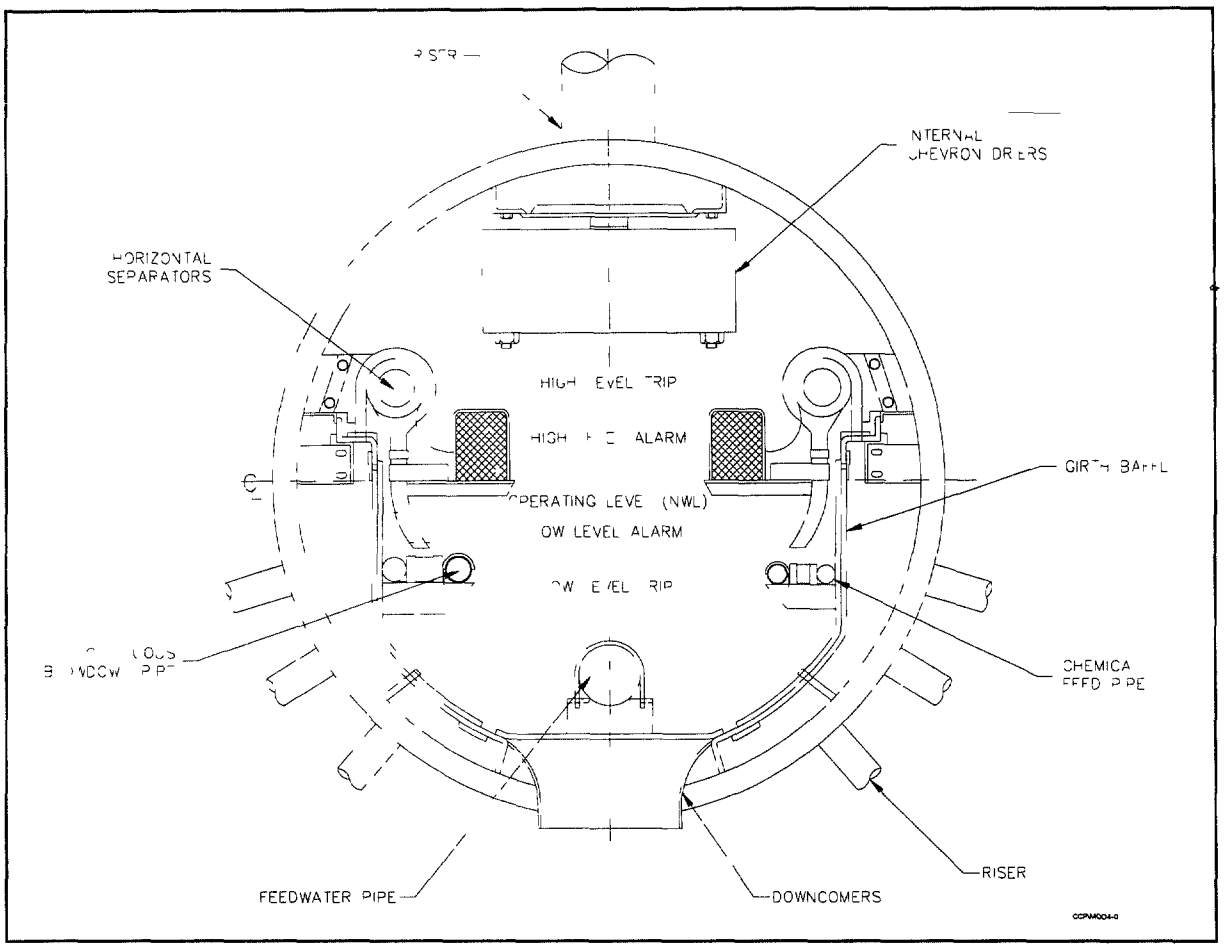

Figure 4-15 HP Steam Drum

484

As the steam and water mixture is heated, it expands, becomes less dense, rises, and flows into the HP steam drum The cooler, more dense, water from the downcomers and the lower headers flows in to take the place of the rising ~~heated~~ steam/ water, mixture creating natural circulation in the high pressure section The lower and upper headers of the evaporator, as well as the respective tubes, are located directly in the exhaust gas flowpath Riser tubes carry the steam/water mixture from the upper headers to the HP steam drum

The steam and water mixture flowing into the HP drum from the evaporator risers is directed inside the drum by circumferential girth baffles to the steam separators located along the riser side of the drum The steam and water mixture passes through the steam separators which causes the steam-free water to return to the bottom of the drum and mix with the feedwater The steam is directed to the top of the drum to chevron driers The steam passes through the chevron driers where any remaining moisture and impurities are removed Once through the driers, the steam flows into the dry box located in the top of the drum The dry box routes the dry saturated steam to the low temperature HP superheater

Low Temperature HP Superheater

The low temperature HP superheater is typically of finned tube construction The superheater consists of rows of heat exchanger tubes located within the high pressure steam generation section of the HRSG Each row makes one pass through the combustion turbine gas exhaust path Steam exits the low temperature high pressure superheater and flows through the HP steam attemperator

As steam passes through the attemperator, a fine mist of feedwater is sprayed into the steam flowpath As the water evaporates, it absorbs some of the heat from the steam, reducing the steam temperature The HP steam, at a reduced temperature, exits the attemperator and is routed to the high temperature HP superheater

~~for protection of the high temp HP superheater~~
for SH temp control

485

High Temperature HP Superheater

The high temperature HP superheater is of finned tube construction The high temperature HP superheater is located in the HP steam generation section of the HRSG The superheater consists of rows of heat exchanger tubes Each row makes one pass through the combustion turbine exhaust gas path

High Pressure Steam Generation Section Operation

Operation of the HP steam generation section consists of the following

- Operation of the HP economizer
- Maintaining proper drum level
- Maintaining HP superheat temperature
- Operation of the HP section vents and drains

Operation of the HP Economizer

Feedwater flow to the HP economizer is controlled by the position of the motor-operated inlet valve and the motor-operated bypass valve The HP economizer motor operated valves are each equipped with three modes of operation, AUTO, MANUAL, or TAGOUT When both valves are placed in the AUTO mode, feedwater flow through the economizer can be in either the NORMAL mode or the BYPASS mode

During startup of the HRSG, the economizer inlet and bypass valve are placed in the AUTO mode of operation, and the economizer is placed in the BYPASS mode Once selected, the bypass valve automatically opens and the inlet valve automatically closes In this configuration, water flow is routed directly to HP economizer No 2, bypassing HP economizer No 1 **(Figure 4-16)** This flowpath prevents HP economizer No 1 from steaming during HRSG startup The economizers are typically operated in this arrangement until steam flow from the HP steam drum is greater than 25%

When steam flow is greater than 25% of rated steam flow, the economizer inlet valve is opened and the bypass valve is closed During shutdown, the economizer is operated in the NORMAL mode as combustion turbine load is decreased

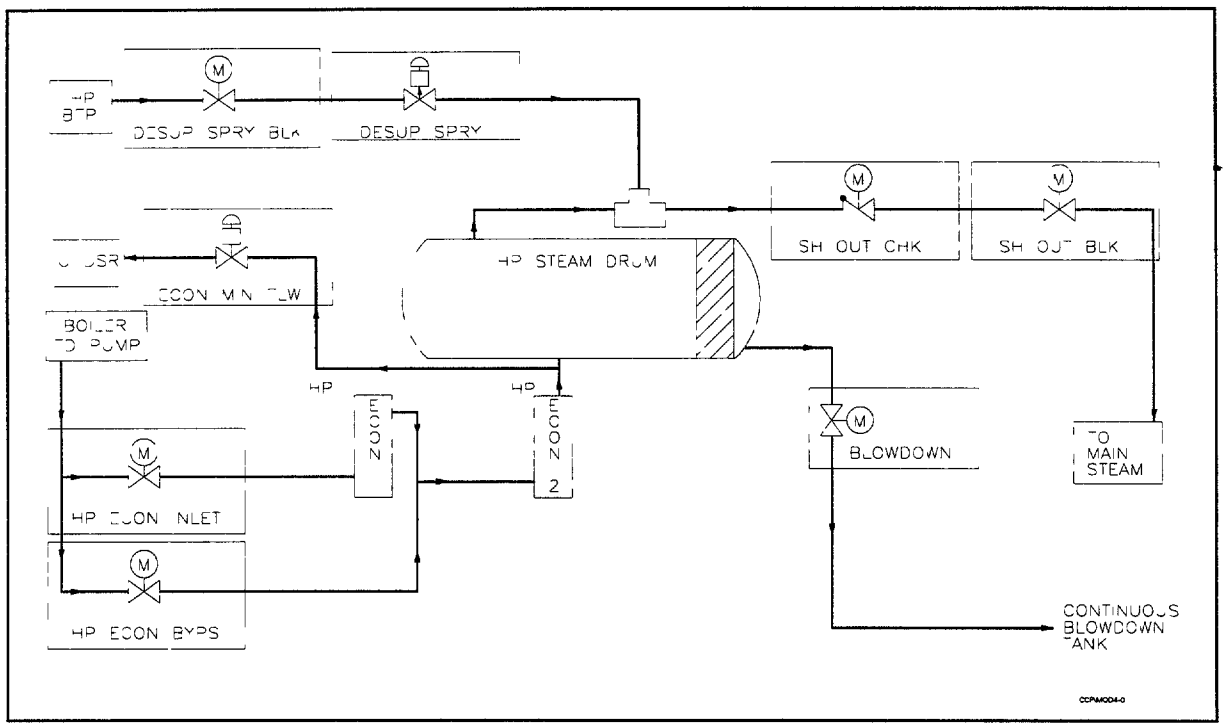

Figure 4-16 HP Steam Generation Section Feedwater Arrangement

489

At approximately 20% of rated steam flow from the HP steam drum, the economizer is switched to the BYPASS mode When switched to the BYPASS mode, the bypass valve automatically opens and the inlet valve closes

Regardless of HP steam usage, a continuous flow of feedwater through the HP economizer is required to maintain a minimum HP feedwater temperature The HP economizer minimum flow valve regulates flow through the HP economizer to maintain HP feedwater temperature at the minimum value

HP Drum Level

Feedwater is supplied to the HP steam drum by the boiler feed pumps During low load and startup conditions, drum level is controlled using the single element mode, drum level only When the steam flow from the drum increases above 50% of rated flow, the economizer minimum flow valve is closed, and drum level is maintained using three element control, 1) HP feedwater flow, 2) HP drum level, and 3) HP steam flow

Maintaining proper steam drum level is a critical function and can not be overstressed An excessively high drum level can flood the moisture separators located within the steam drum This can result in moisture carryover into the HP superheater and possibly a turbine trip An excessively low drum level can result in decreased steam output, overheating of the economizer, evaporator, and superheater tubes and a combustion turbine trip

HP drum pressure is a result of drum level combined with the generation of steam in the HP evaporators The HP drum pressure will fluctuate with changes of load demands on the HP steam system During a sudden load increase, drum pressure will decrease This will result in a false high level condition known as "swell" During a sudden decrease of steam demand, steam drum pressure will increase and result in a false low level condition known as "shrink"

488

HP Superheater and Attemperator

Steam from the HP steam drum must be superheated to a controlled temperature before entering the steam turbine To accomplish this, steam from the HP steam drum is routed through the low temperature high pressure superheater where its temperature is increased above the saturation point This initial superheating of the steam establishes the correct conditions for admission of spray water in the desuperheater Spray water is admitted to the attemperator based on the steam exit temperature of the high temperature HP superheater

The attemperator spray valve is normally equipped with an upstream motor-operated isolation valve The controller normally receives an input signal based on combustion turbine megawatt load, as well as high temperature HP superheater outlet temperature The combustion turbine megawatt signal is provided since an increase or decrease in turbine exhaust temperature affects the rate of heat transfer across the superheater before an increase or decrease in steam flow from the HP steam drum occurs

An excessively high superheater outlet temperature could cause damage to the main steam piping or the steam turbine An excessively low temperature could result in possible moisture carryover to the steam turbine

Steam from the HP superheater is supplied to the HP steam header for use by a process, auxiliary steam, or the steam turbine The control of steam flow from the HP superheater outlet is through a motor operated stop check valve and a motor operated isolation valve During startup of the HRSG, the motor operators for the stop check valve and the steam stop valve are moved to the OPEN position before the HP steam drum begins to develop pressure As the HRSG heats up, steam flows through the stop check valve and begin to warm the Main Steam System During this period of startup, the combustion turbine is maintained at minimum load

If the HP steam header is already pressurized by an auxiliary source prior to HRSG startup, the disk of the stop check valve remains seated due to the already pressurized HP steam header Once the HP steam drum increases to a pressure equal to the HP steam header, the stop check valve slowly opens, and steam begins to flow

489

HP Drains and Vents

Typically, the HP steam generation section of the HRSG normally is equipped with the following vent, drain, and continuous blowdown motor operated valves (**Figure 4-17**)

- HP Economizer No 1 Drain Valve
- HP Economizer No 2 Drain Valve
- HP Evaporator Drain Valve
- HP Economizer Vent Valve
- HP Economizer High Point Vent Valve
- HP Continuous Blowdown Valve
- HP Drum Vent Valve
- HP Drum Outlet Vent Valve
- Low Temperature HP Superheater Drain Valve
- High Temperature HP Superheater Drain Valve
- High Temperature HP Superheater Inlet Drain Valve
- Low Temperature HP Superheater Vent Valve
- High Temperature HP Superheater Vent Valve
- IP Superheater Vent Valve

Each of the superheater and steam drum vent and drain valves are normally operated remotely through the distributed control system During startup, the drum vent valve is closed when HP steam drum pressure increases to approximately 30 psig The superheater vent valve remains open to maintain steam flow through the tubes to prevent overheating The superheater vent valve is closed once the HP steam generation section is on-line and providing sufficient steam flow

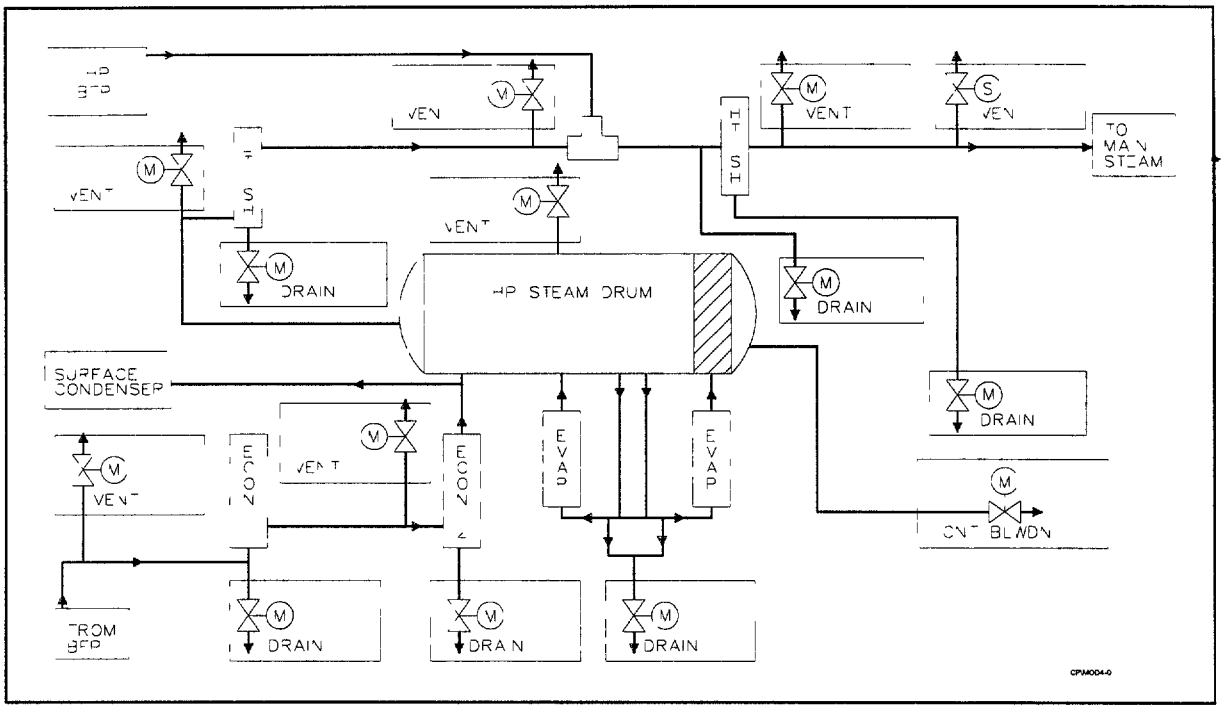

Figure 4-17 High Pressure Vents and Drains

491

4 6 HRSG Inspections

Since the HRSG is basically a stationary device, it falls under a different philosophy of maintenance than does a gas turbine The inspections for a HRSG can be classified as standby, running, and major

Standby Inspections

The standby inspection pertains particularly to gas turbine and heat recoveries steam generators used in intermittent service, such as peaking applications In these cases, starting reliability is of prime concern, since a delay in starting usually means that the peak demand period has passed This inspection usually includes the items listed

1 All rotating equipment such as

   a Dampers - free to rotate and electrical service in order
   b Pumps - proper oil level, free rotation, and electrical service in order
   c Safety valves - ungagged and lift freely

2 Water level in steam drums

3 Electrical power, cooling water, and instrument air available

The inspections can be performed in off-peak hours without interrupting the availability of the equipment The final standby inspection is a weekly test run to verify operation of controls and equipment availability

Running Inspection

The running inspection consists of observations made while a unit is in service All equipment should be observed on every shift or at a minimum once daily Operating data should be recorded to permit an evaluation of equipment performance and maintenance requirements

492

On a running inspection, a heat recovery steam generator should be observed and data recorded on the following items

- Steam production vs water flow
- Exhaust temperature from gas turbine vs steam production
- Superheater pressure and temperature
- Drum pressure
- Total solids in drum water
- Saturated steam solids

For heat recovery steam generators with supplemental fuel firing, the following additional items should be observed

- Fuel gas flow vs steam production
- Manifold gas pressure
- Regulated gas pressure
- Tube temperature

The data should be compared against previously collected data to determine trends A high rate in water flow can indicate a valve leak, a change in blowdown rate, or tube failure A steady increase in drum pressure at a given steam flow and header pressure may indicate a fouled superheater High steam production and fuel flow could indicate overfiring of the burner if all other design conditions are being met Steam production at the design point and excessive fuel flow may be an indication of heat transfer surface fouling or excessive leakage in the bypass damper or ductwork

A loss of steam production from fouling or leaks requires a shutdown of the system, except in the case when fouling is due to soot being produced by a gas turbine that is being fired on liquid fuel In this case, soot blowers are used as necessary to keep steam production at the design level If steam side fouling is detected in the superheater, the heat recovery unit should be shut down and sampling of the affected tubes should be performed If the material is found to be water

soluble, a hot water wash may be performed to remove tube side deposits If the material is not water soluble, then chemical cleaning will be required to remove accumulated deposits If the need to clean the HRSG is frequent, the cause of the fouling (feedwater condition or carryover due to poor separator performance) should be determined and corrected

The fuel system should be observed and checked for leaks weekly Changes in fuel pressure can indicate plugging of fuel passages or that metering elements are damaged or out of calibration

Hot Gas Path Inspection

A minor inspection should generally be made once or twice a year This inspection should be of the external parts while the unit is in service The inspection should include all areas where gaskets are used and where leakage can occur, including joints in the ductwork system All electrical connections should be inspected for deterioration of insulation and for loose connections

Major Inspections

All heat recovery steam generators should be given at least one major inspection a year, as required This inspection should consist of both the external and internal surfaces of the unit A series of suggested steps is outlined below

- The unit must be taken out of service, properly cooled and drained
- All manholes and handholes should be opened
- A thorough examination should be made for deposits, scale, and pitting on all pressure parts
- All piping connected to the HRSG should be inspected to see that it is clean and all valves are in good working condition
- Careful examination of all weld joints to the unit should be made for cracks, pitting, corrosion, erosion, and scale
- The external surfaces of tubes and fins should be examined for scale, deposits, and loss of fin material

After the inspection of all equipment is complete, a hydrostatic test of 1 5 times operating pressure should be applied A record of each inspection should be kept in a uniform manner so that any change of condition can be noted and compared, especially in reference to corrosion, erosion, cracks, pitting, thickness of scale, and other unusual conditions

Dampers

Any damper, particularly a large one, will leak if the frame becomes twisted The most likely cause of distortion is uneven heating After the unit has been operated, if some distortion takes place due to heating, one method of correcting the distortion is to hammer the angle iron sealing strip to fit the disc on both the upstream and downstream sealing surfaces

Ductwork System

A weekly inspection should be made of the ductwork and its joints for signs of leakage during operation During ductwork system inspections, the stack, the upper transition, and the top of the economizer should be inspected for corrosion due to condensation of corrosive elements contained in the exhaust gas

Expansion Joints

Expansion joints are furnished in the ductwork system for both fired and unfired heat recovery steam generators These expansion joints will allow the duct system to move as the duct is heated and cooled A weekly inspection during operation should be made of the expansion joint and its connections to the ductwork for leakage Any detected leakage should be corrected as soon as possible

Burner Systems

On heat recovery steam generators equipped with supplemental fuel firing, an inspection should be made at least once per month on all joints and equipment installed in the gas line Flame scanners should be inspected monthly for cleanliness The degree of fouling of the scanner depends on the type of fuel used and the plant operating characteristics Also during this time, the fuel shut-off valves should be inspected to verify proper operation

495

Combined Cycle
Principles Course
Module 5

Plant Configuration and Heat/Mass Balances

FCS
Fossil Consulting Services, Inc.

Columbia, Maryland

496

TABLE OF CONTENTS

SECTION		PAGE
5 0	PLANT CONFIGURATION AND HEAT/MASS BALANCES	1
5 1	Introduction	1
5 1 1	Operations	1
5 1 2	Existing Combustion Turbine Upgrade	2
5 1 3	Configuration Selection	2
5 1 4	Physical Arrangement	2
5 1 5	Schedule	3
5 1 6	Estimated Cost	3
5 2	Design Criteria	3
5 2 1	Plant Operating Characteristics	3
5 2 2	Modifications/Upgrades to Existing Gas Turbines	14
5 3	Plant Configuration Screening	18
5 3 1	Introduction	18
5 3 2	Screening	20
5 4	Plant Configuration Selection and Preliminary Descriptions	31
5 4 1	Rationale for Selection of Recommended Configuration	31
5 4 2	Discussion of General Arrangements for Final Candidates	37
5 4 3	Heat Balance of Recommended Configuration Including Rationale for Its Selection	37

497

5 0 PLANT CONFIGURATION AND HEAT/MASS BALANCES

5 1 Introduction

This study examines the technical and economic feasibility in converting the station simple cycle combustion turbine Units 5, 6, 7 and 8 to a combined cycle plant Heat and mass balances for the upgraded plants will also be discussed These combustion turbine units are Model 501 B5 units, each with a nominal site rating of 70 MW In converting to combined cycle, waste boilers, otherwise known as heat recovery steam generators (HRSG's), would be installed to receive the hot combustion turbine exhaust gases normally released to the atmosphere, thus making steam The steam produced by the HRSG's is utilized in a steam turbine generator to produce additional power

5 1 1 Operations

From Power Company (PC) Annual Budget Capacity Factor Reports and historical daily system load profiles, a number of observations were made

- Daily start/stop cycles will be required, except on weekends, throughout most of the year
- The number of combustion turbines required in the combined cycle configuration will vary depending on time of year, availability of baseload resources, and the availability and price of purchased power
- Summertime operations may require daily operation of all four combustion turbine units including one or more round the clock
- Frequent use of one or more combustion turbine units in simple cycle mode is indicated

498

5 1 2 Existing Combustion Turbine Upgrade

A number of modifications have been identified which will produce approximately 2 5 MW more power from each unit and lower the heat rate at least 50 Btu/kWh The cost for these modifications has been stated to be $2 million per unit by the manufacturer (total $8 million), but may be linked to the supply of steam turbines The estimated value of the improved performance is approximately $10 million This upgrade is not essential to the project and could be made after conversion to combined cycle

5 1 3 Configuration Selection

Five possible combined cycle configurations were considered These included one steam turbine per boiler, one steam turbine for the four boilers, one steam turbine per two boilers and combinations of the above The evaluation process produced two candidate configurations one steam turbine per boiler and one steam turbine per two boilers Even preliminary cost comparisons, however, showed the one steam turbine per two boiler configuration to be significantly less costly than the four steam turbine case Thus, the balance of the study was based on adding steam turbine Units 9 and 10, each rated approximately 90 MW

5 1 4 Physical Arrangement

The two steam turbines have been located in an in-line arrangement west of the existing combustion turbine Units 5, 6, 7 and 8 Their axis is at 45 degrees to the combustion turbines so as to be parallel to the new cooling towers located adjacent and to the northwest This will provide a better circulating water piping arrangement The turbine pedestal is enclosed to form a turbine building The control building is actually part of the turbine building and also has three levels operating level at which the control room is located, mezzanine containing the cable spread room and electronics room and grade level containing showers, lockers, kitchen and lunchroom A block wall enclosure with removable hatches provides protection for the steam turbines and a gantry crane services both units

5 1 5 Schedule

A project schedule has been developed which assumes a target date release for detail design engineering, including purchasing Engineering is closely linked with receipt of certified vendor drawings which follows order placement by periods ranging from 4-6 weeks to 12-16 weeks, thus the importance of timely order placement Erection has been made part of the purchasing plan for the steam turbines, HRSGs, condensers and cooling towers Packaging of more than one piece of equipment such as the condenser with the steam turbine or having the foundation supplied with the equipment has not been planned because of the many additional interfaces and layered interfaces which impact schedule and because of the additional cost of double markups Commercial operation of Unit 9 is planned for three or four years later

5 1 6 Estimated Cost

A cost estimate was prepared for both Units 9 and 10 which totaled $79,156 000 with an accuracy of +/- 10 percent, and is in 1987 dollars This equates to obtaining somewhat over 180 MW of additional capacity at approximately $440/kW The combined cycle plant is characterized by excellent efficiency, approximately 46 percent and the flexibility of operating in increments of simple cycle or combined as the load and duration dictates

5 2 Design Criteria

5 2 1 Plant Operating Characteristics

A definition of plant operating characteristics is necessary so that the requisite degree of operating flexibility and controllability are properly considered in the combined cycle system configuration and in the selection of system components where related component characteristics permit a discrimination to be made The key operating characteristics that are helpful to this purpose are defined by a typical or a range of typical startup and shutdown cycles, including rates of load increase and decrease and time spent at maximum load

500

1 Data Sources

Two principal sources of information that define the load factor and load profile characteristics expected for the combined cycle plant were provided by the Power Company (PC)

a The Annual Budget Capacity Factor Reports, which present the results of a computer modelling of the PC System loads and resources using the PROMOD software package and provide annual and monthly capacity factor data for each resource PC provided data for years 1990 through 2005, inclusive The combined cycle plants were modeled in PROMOD as a pair of identical units each having a peak summer capacity of 210 MW

b Historical daily system load profiles, which provide a more detailed insight into the manner in which the combined cycle resource will probably be deployed to meet typical daily load changes at various times of the year PC provided a set of typical daily load profiles for weekdays and weekends for each month of 1985

2 Data Analysis

The forecasted monthly and annual capacity factor data resulting from the PROMOD computer modelling for each of the combined cycle units are shown graphically in Figures 5-1 and 5-2 respectively It is apparent that although the monthly capacity factors are expected to fluctuate widely, the annual capacity factors are quite stable and provide a visual confirmation of the deployment of the new coal-fired base load plants in later years The annual capacity factor data clearly show that the combined cycle units are expected to have extensive use over the period Evaluation of the data shows that although monthly load factors fluctuate between 10% and 80%, they rarely drop below 20 percent and that overall load factor exceeds 40 percent This information, while of vital interest in the assessment of resource use, shed little light on the frequency and magnitude of plant operating cycles or the ways in which those operating cycles will change as overall PC system load profiles change throughout the year To obtain such insight it is necessary to evaluate the typical daily PC system load profiles and to consider how

501

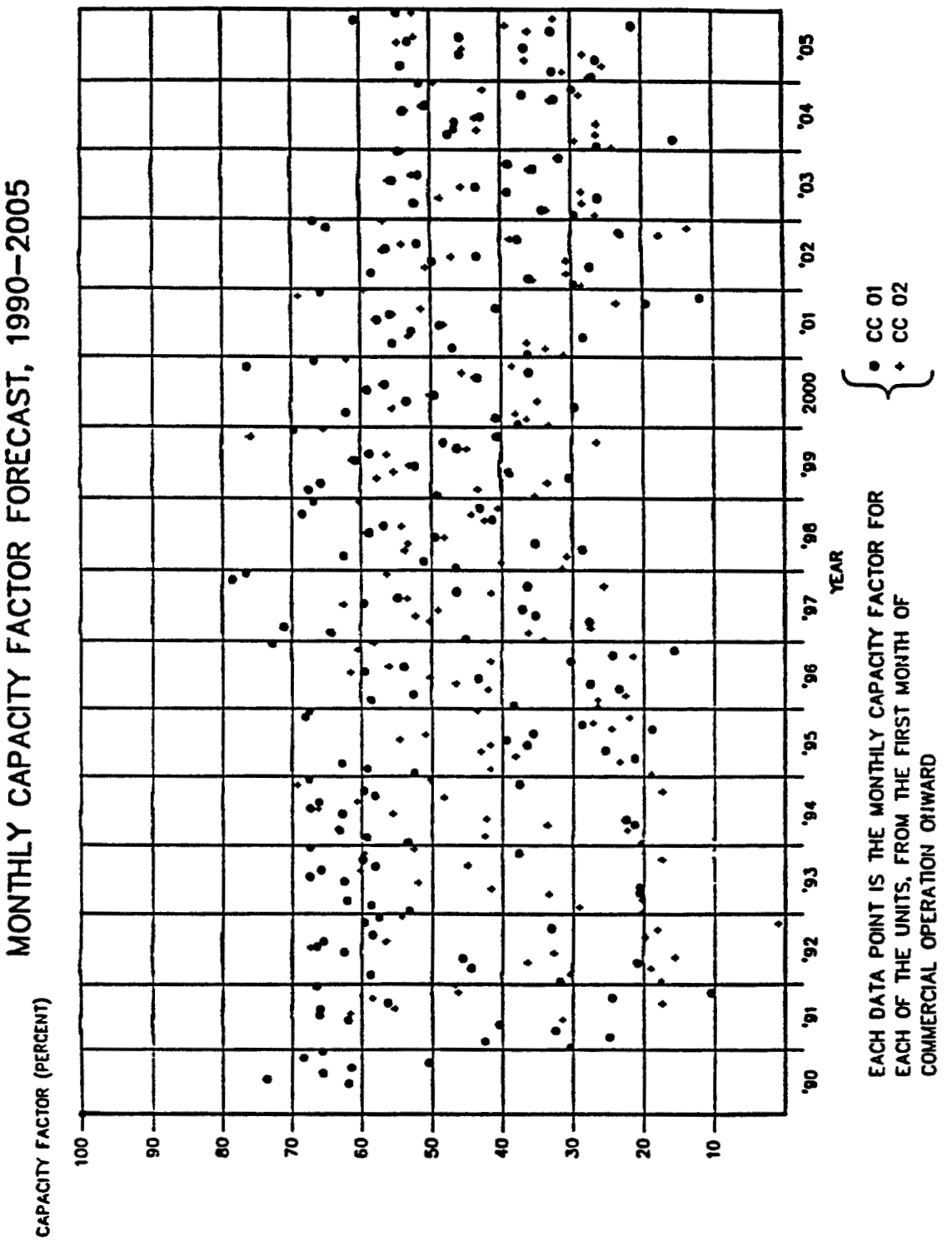
MONTHLY CAPACITY FACTOR FORECAST, 1990–2005
CAPACITY FACTOR (PERCENT)
100
90
80
70
60
50
40
30
20
10
'90
'91
'92
'93
'94
'95
'96
'97
'98
'99
2000
'01
'02
'03
'04
'05
YEAR
EACH DATA POINT IS THE MONTHLY CAPACITY FACTOR FOR EACH OF THE UNITS, FROM THE FIRST MONTH OF COMMERCIAL OPERATION OHWARD
• CC 01
+ CC 02

Figure 5-1

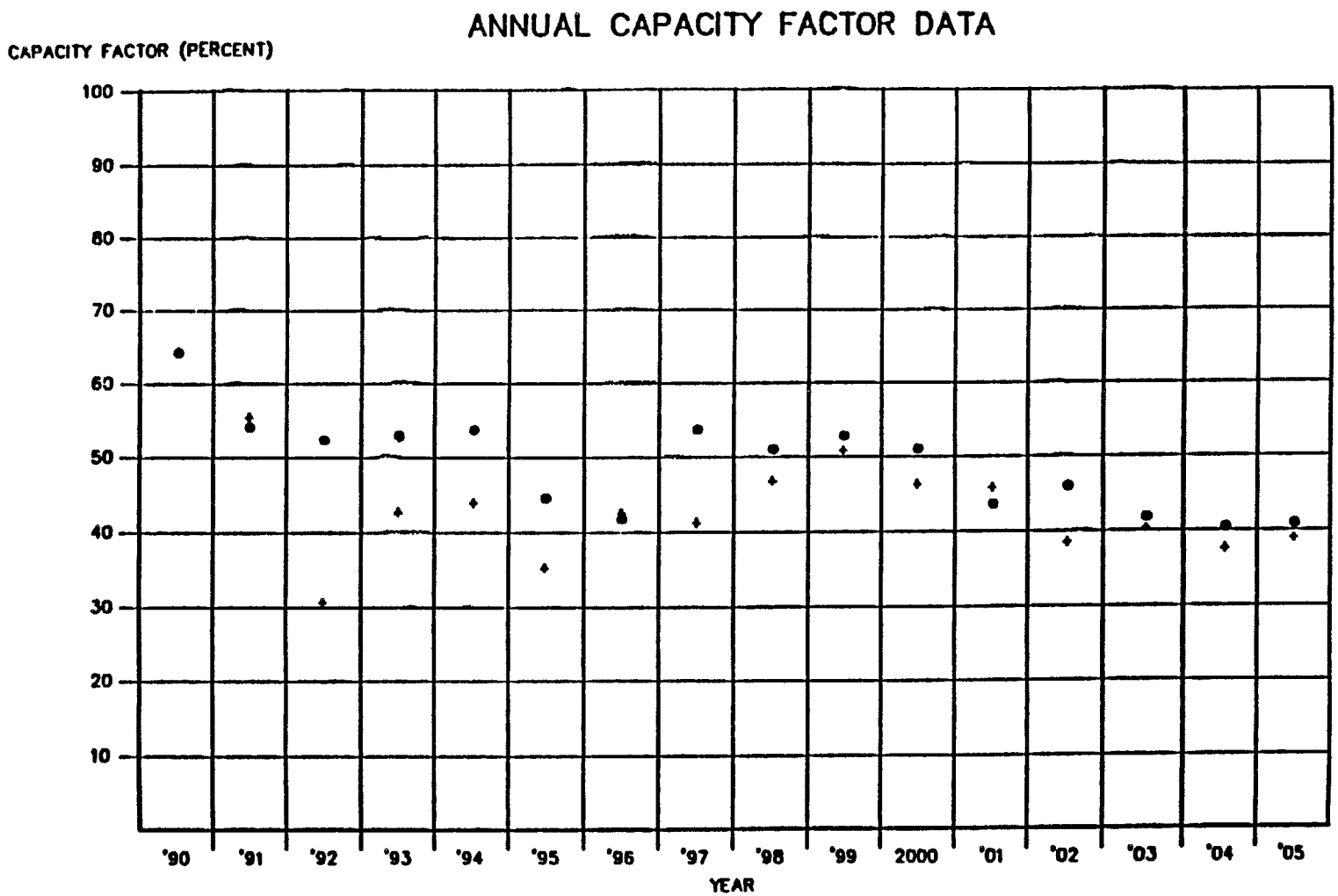

EACH DATA POINT IS THE ANNUAL CAPACITY FACTOR FOR EACH OF THE UNITS, FROM THE FIRST YEAR OF COMMERCIAL OPERATION ONWARD

● CC 01
✦ CC 02

Figure 5-2

503

the combined cycle plant is intended to be integrated into the total system resource scenario to provide the real-time generation of sufficient capacity to meet system energy requirements The following assumptions were made in the PROMOD model with respect to the dispatch of the combined cycle units and must be considered when evaluating the daily system load profiles

a Dispatch of the combined cycle is made on a strictly economic basis, after dispatch of all available coal-fired base load and economically preferable purchased power resources

b Using historical data, nominal assumptions are made for the availability and price of purchased power which can either displaced some coal-fired base load plant and combined cycle plant operations that might otherwise be required or replace losses of coal-fired base load resources

3 Evaluation of Typical Daily Load Profiles

Daily load profile forecasts can be done statistically, requiring analysis of many daily load profiles and regression of the data into a typical or a set of typical daily load profiles This approach can be quickly and effectively applied only if the system load forecast and resource data and the economic data used in the PROMOD system model are available as well as a data tape of historical system daily load profiles However, the statistical method tends to soften or blur the reality of actual daily load profiles due to the "averaging" effects In examining the PC typical daily load profiles for 1985, it was concluded that the profiles are strongly related to ambient temperature conditions Given the generally predictable weather conditions, it was concluded that the effects of the assumptions made in the PROMOD modelling on expected combined cycle operations could be readily seen by examining two examples of typical but not extreme weekday load profiles on the PC system

Figure 5-3 is for a typical winter dad with morning and afternoon peak loads PC has coal-fired base load resources which total 831 MW if it is assumed that all of these resources are available, or that purchased power exactly replaces any outages among these resources it is evident that very little utilization of the plant would be needed to cover the morning peak excess of 45 MW or the afternoon peak excess of

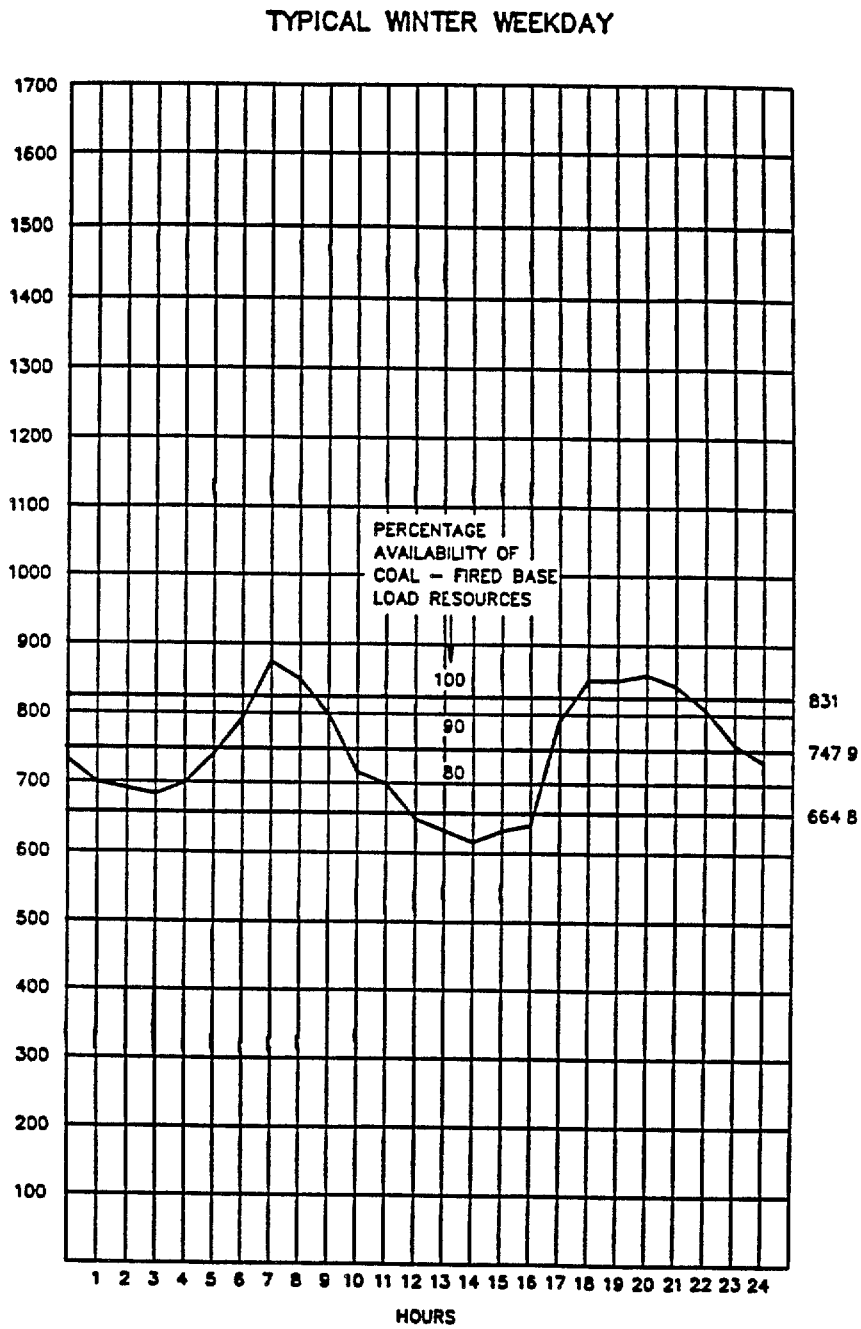

Figure 5-3 System Load Curve

25 MW Such short duration and low peak loads would probably be handled by running one combustion turbine unit in simple cycle or peaker mode, since neither peak is of sufficient magnitude or duration to warrant using the steam cycle However, if less than 100% of the coal-fired base load resources are available, the peak loads and peak durations expand correspondingly Even with 90% availability of the coal-fired base load resources, the combined cycle would be required to supply as much as 128 MW during the morning peak and 108 MW during the afternoon peak, with durations in each case in excess of 4 hours Each peak would, probably warrant starting one combustion turbine and a steam turbine-generator in combined cycle model greater losses of the coal-fired base load resource would result in rapid expansion of combined cycle plant usage Figure 5-4 presents a transformation of Figure 5-3 that indicates the amount of generation that the combined cycle (or some more economic resource) would be required to make up, assuming several net availabilities of coal-fired base load resources (reduced by or amended by the purchase of economically available power) Comparing Figure 5-4 with the expected winter monthly capacity factors in Figure 5-1, which are frequently in the 50 to 70% range, indicates that the average availability of base load resource expected in winter is low, perhaps as low as 60% This is consistent with the planned outage schedules of these base load resources which occur during the winter months Consider further that the sample load profile is for year X and that substantial peak load expansion is expected in the period after year X without any addition to coal-fired base load resources It is evident that on typical winter weekdays the combined cycle plants can expect to see daily duty and that the duty will depend critically upon the combined availability or the coal-fired base load and purchased power resources

Figure 5-5 is for a typical summer day and is characterized by a single peak with an extremely rapid ramp-up of load from the morning low to near the daily peak in a period of less than eight hours Even with 100% availability of the coal-fired base load resources, there would be need for additional capacity to meet the system load at all times, and the full capacity of the combined cycle would be required for as much as 13 hours daily If the availability of the coal-fired base load resources is less than 100%, this would expand the required duration of operation of all of the combined cycle units at full load correspondingly, and could require operation of one or perhaps more of the combustion turbine units round the clock Figure 5-6 shows the required

5C'o

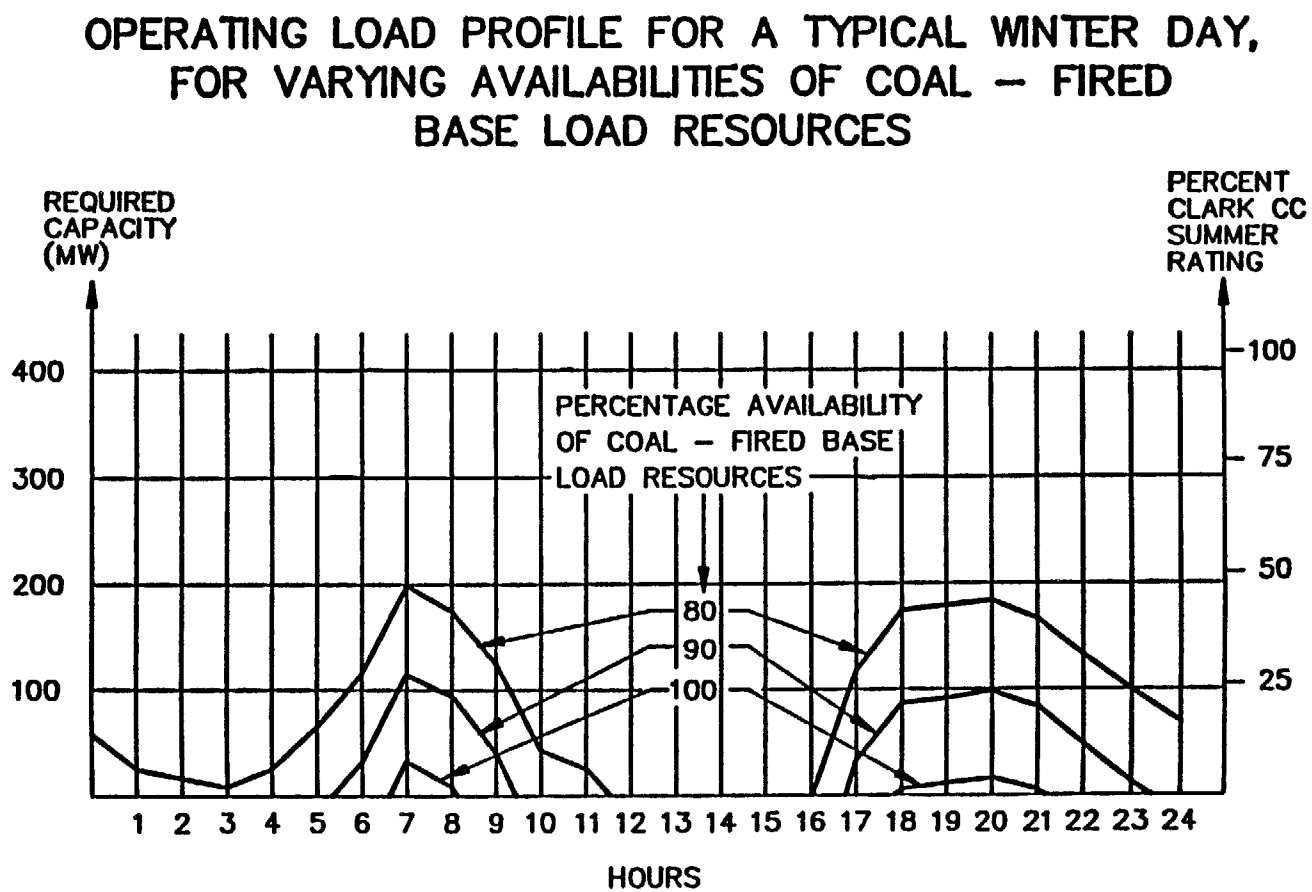

Figure 5-4 Combined Cycle Units

507

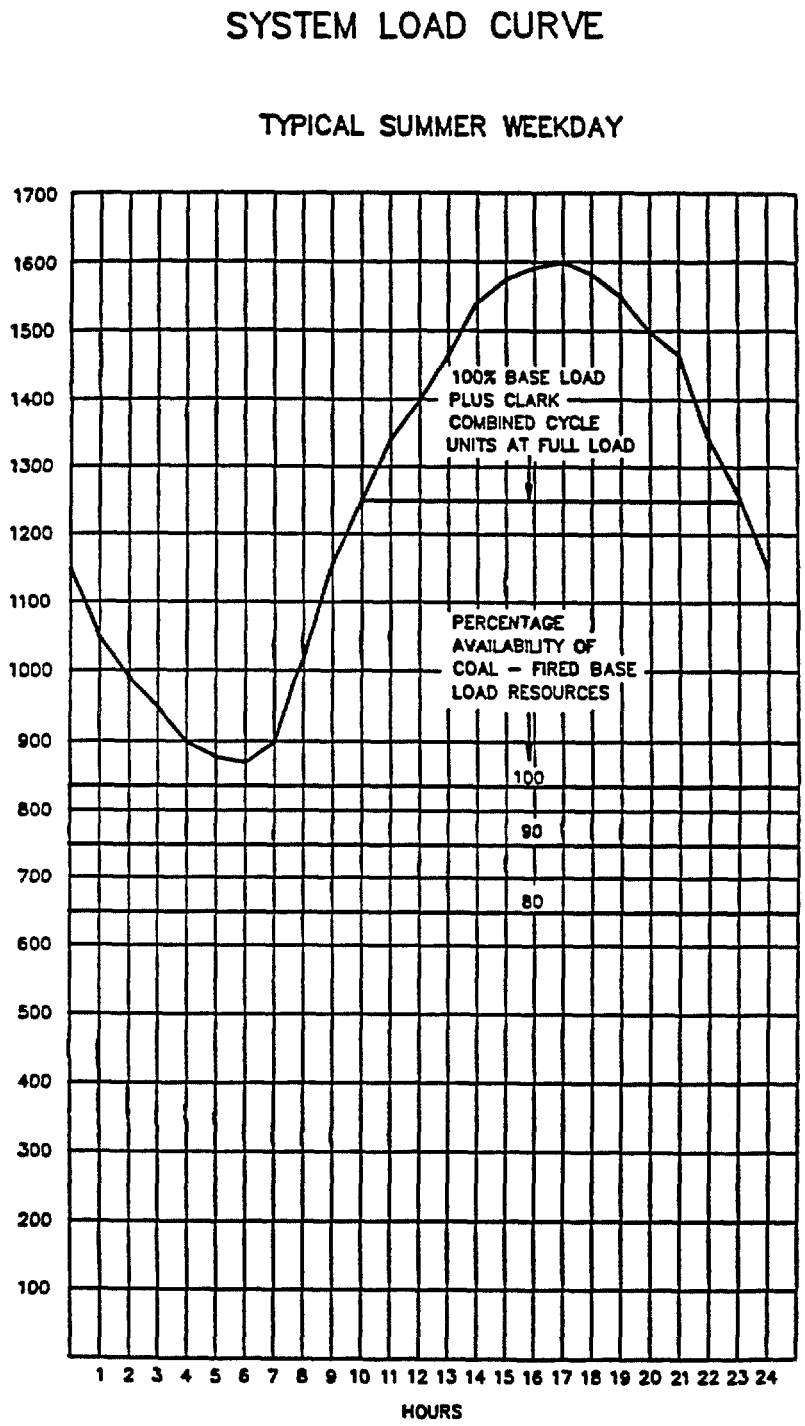

Figure 5-5

508

COMBINED CYCLE UNITS

OPERATING LOAD PROFILE FOR A TYPICAL SUMMER DAY, FOR VARYING AVAILABILITIES OF COAL – FIRED BASE LOAD RESOURCES

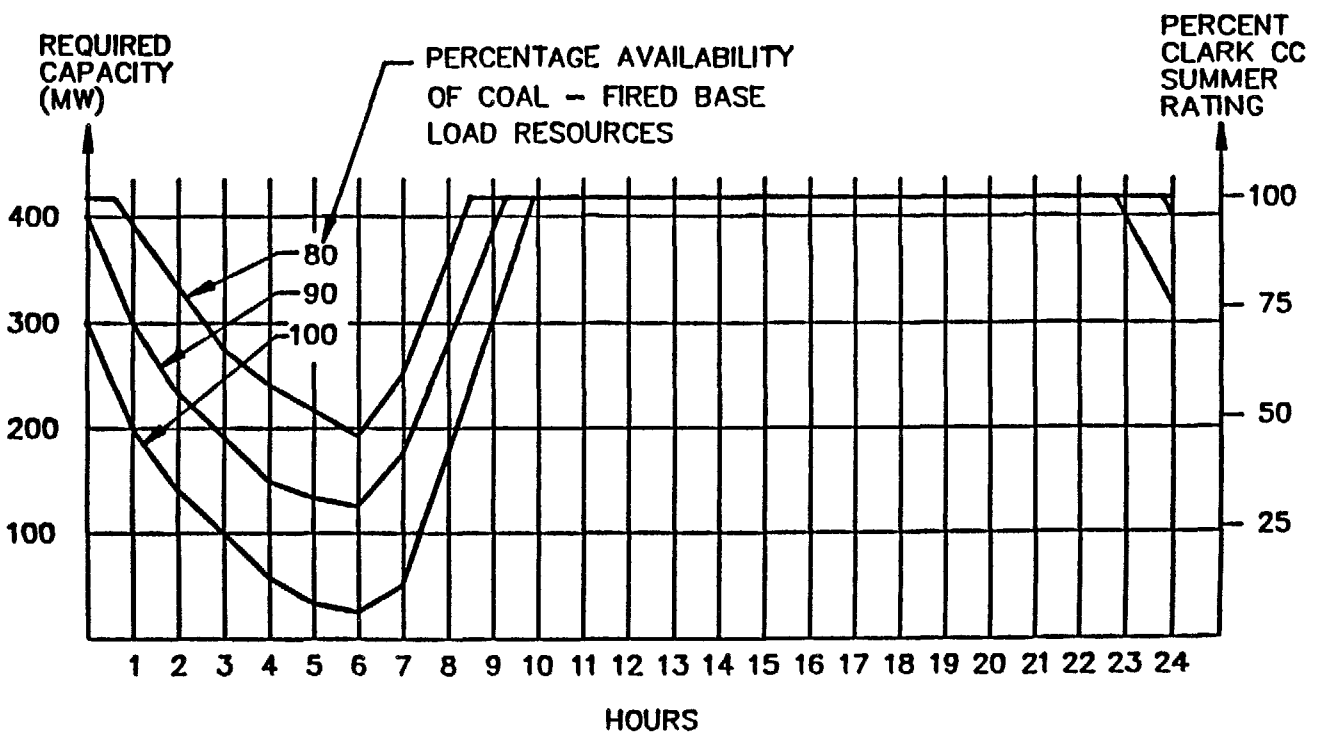

Figure 5-6

509

combined cycle operating load profile on a typical summer day, with several arbitrary assumptions as to the loss of availability of base load resources It should also be considered that in later years the PC system peak loads are expected to have risen to approximately 1830 MW or about 200 MW more than this current profile represents, and that no additions to the coal-fired base load resource will occur Under adverse load and resource conditions it is not improbable that the No I combined cycle unit would be required to operate at full load for between 16 and 18 hours in later year peak load days

4 Evaluation of Other Load Profile Data and Weekend Operations

The two load profiles evaluated above correspond to typical winter and typical summer daily load profiles

Between these examples lie a wide range of operating possibilities for the combined-cycle plant There is also the possibility of no combined cycle operation whatsoever during certain mild springtime and fall climatic conditions

Current weekend system loads are typically between 50 and 100 MW lower than weekday loads with generally similar load profiles However, the availability of purchased power at economically advantageous rates on weekends makes it unlikely that the combined-cycle plant would be used on weekends It is not anticipated that this weekend situation would change in the future

5 Summary of Expected Operating Requirements

In summary, the typical daily operating criteria for the combined cycle plant can be characterized as follows

a Daily start/stop cycles except on weekends throughout most months of the year

b Maximum daily capacity corresponding to 0, 1, 2, 3 or 4 combustion turbines in operation in the combined cycle mode, depending on the time of year, the availability of base load resources and the availability and price of purchased power

510

c Summertime operations requiring daily operation of all four units in combined cycle mode, with one or more units operating round the clock depending on variations of system load and base load resources

d Frequent use of one or more combustion turbine units in the peaker (simple cycle) mode

5 2 2 Modifications/Upgrades to Existing Gas Turbines

1 General

Modifications or upgrades to the existing gas turbines can improve the performance of the combined cycle by

a increasing the combustion turbine generator set output

b increasing the thermal energy in the combustion turbine exhaust, thereby increasing the energy received by the HRSG and, in turn, the power output of the steam turbine generator set and the efficiency of the combined cycle operation at full load

c improving the thermal efficiency of the combined cycle operation it part loads

2 Upgrade Of Firing Temperature

Items a and b of the above can be achieved by increasing the firing temperature of the combustion turbines Such an upgrade is commonly available to combustion-turbines that have been in service for several years due In some measure to advances in materials, but more commonly to the application of more effective cooling techniques to hot, section parts Due to the powerful effect that firing temperature has on net power output, relatively minor increases in firing temperature can give worthwhile increases in power output without the need to change the original equipment geometries and the relatively large cost increases that such changes would entail

511

The proposed upgrade will increase firing temperature to produce approximately 2 5 MW more output from each combustion turbine generator set and increase the exhaust temperature by approximately 25°F

3 Upgrade Of Part Load Efficiency

Another change that is particularly important to the conversion of simple cycle combustion turbines to combined cycle use is the ability to control combustion turbine exhaust temperature at part load through the use of inlet guide vanes (IGV's) on the compressor Without IGV control, exhaust temperature is a strong function of combustion turbine load In a combined cycle application without IGV control load reduction of the combustion turbine unit would result in a decrease of steam superheat temperature in the HRSG and an overall deterioration of steam cycle efficiency With IGV control, combustion turbine exhaust temperature and steam superheat can be held essentially constant over a substantial range (up to 35 percent) of full load and the deterioration of steam cycle efficiency is less than that which would occur without IGV control

The proposed upgrade will modify the compressor assembly to assure that IGV control can bet used in the combined cycle plant

4 Upgrade Limitations

Upgrades to performance are frequently limited by the capability of the existing equipment to operate at higher power levels The manufacturer indicated that the proposed upgrade is slightly lower (200 kw) than the maximum upgrade available for the existing combustion turbines, since the generator is a limiting factor at the' existing 0 9 power factor This generator shortcoming could be rectified in either or combination of two ways

a Operate the combustion turbine generator slightly above 0 9 power factor

b Obtain the steam turbine generator with a power factor lower than 0 9 so as to be able to make up any VAR deficiency from operating the gas turbine(s) at greater than 0 9 power factor

512

5 Upgrade Evaluation

The cost of combustion turbine upgrades has to be measured against the economic value of the performance improvements realized if they are implemented This evaluation is best performed after the optimum system configuration has been defined Using the preliminary heat balances developed herein for the existing and upgraded combustion turbine units, the preliminary evaluation indicates a small but positive overall value in performing the upgrades

6 Upgrade Package

The proposed upgrade package consists of 9 items as shown in Figure 5-7 which also describes the result obtained from the upgrade The performance of the upgraded machines (which would then become 501B6 units) would be increased by 2 5 MW each at the higher ambient temperature end and the exhaust temperature would be increased by approximately 25°F Heat rate would be unchanged, and the fuel flow would therefore be increased slightly in proportion to the increased power output There would be no appreciable increase in the exhaust flow The generator would still limit the maximum power that could be obtained from the unit at low ambient temperature levels The manufacturer provided a price of $2 million per combustion turbine unit for the upgrade package

Discussion of the upgrade package (See Figure 5-7) concluded that

a All upgrades except 4, 5 and 6 (Row No 2 compressor diaphragm and compressor coating) are required for the performance (firing temperature) increase The higher firing temperature is made possible by advances in blade cooling design

b The second stage compressor diaphragm upgrade is required due to the anticipated use of the IGV's on cold days to maintain exhaust temperature at a level that will maintain steam superheat temperature in the HRSG

512

CONFIGURATION SELECTION CRITERIA

Configuration No	Number of Steam Turbines	1 Capital Cost Factor	2. Availability	3 Operability & Maintainability	4 Single Loss Criteria	5 Spare Parts Management	6 Land Use	TOTAL
Criteria Importance Factor		10	6	5	10	3	2	
1	2	7	8	9	8	8	7	281
2	4	1	10	8	10	10	1	242
3	1	10	1	10	0	6	10	194
4	3	4	9	1	9	1	4	200
5	2	7	6	2	8	1	7	213

CONFIGURATION OPTIONS

1 (2) 70 MW STEAM TURBINES
2 (4) 35 MW STEAM TURBINES
3 (1) 140 MW STEAM TURBINE
4 (1) 70 MW & (2) 35 MW STEAM TURBINES
5 (1) 105 MW & (1) 35 MW STEAM TURBINE

Figure 5-7

514

c The increased fuel use may present some difficulty to PC due to the present permit limitations on fuel consumption

d The upgrade package is essentially identical to that installed at a another location in the country

e Changing the first stage turbine nozzle to a single vane design (Upgrade No 1) from the existing three-vane cluster design improves maintenance aspects of the units With this modification, first stage nozzles can be replaced through the combustor The old design necessitated lifting of the turbine cover for this type of maintenance

f No change in the gas turbine geometry was proposed Pressure ratio would increase slightly No modification to the generator cooling system was proposed The governor would remain as is

5 3 Plant Configuration Screening

5 3 1 Introduction

1 Purpose

The purpose of this screening is to reduce the number of possible configurations to the best two or three for a more detailed study

2 Methodology And Rationale

The methodology and rationale that was used to arrive at this conclusion are as follows

The original five configurations selected for the initial screening are based on the fixed number of four combustion turbine generators (CTG's) at the station and the resulting steam generation from each of the four proposed heat recovery steam generators (HRSG's) The minimum sized steam turbine generator (STG) is based on the output of one CTG/ HRSG train The maximum sized STG is based on the output of all four CTG/HRSG trains Similarly, the two medium size steam turbines are based

515

on two CTG/HRSG trains One other size steam turbine is possible based on a three CTG/HRSG train From these four sizes of steam turbines, five configurations were developed based on all of the possible combinations of these four STG ratings For the purpose of this screening, nominal STG ratings of 35 MW, 70 MW, 105 MW and 140 MW were used

Each of the five configurations were rated relative to several criteria (e g cost, availability, etc) to determine the best configuration options The following selection criteria was utilized

a Capital Cost Factor

b Availability

c Operability & Maintainability

d Single Loss Criteria

e Spare Parts Management

f Land Use

The configurations were rated for each of the criteria on a points from I to 10 In addition, each of the criteria was rated on a scale of 1 to 10, with 10 being the most important, to properly weight the criteria Total points for each of the configuration options were determined by adding the product of the points for each criteria times the criteria importance factor

Efficiency is not one of the criteria used even though it was initially felt that efficiency would be better for those configurations which consisted of the smaller (35 MW) STG units, since at total plant part loads, the smaller STG's will operate at full load, whereas the larger STG's will operate at less efficient part loads However, on further analysis, it was decided that although the smaller turbines will operate at their peak efficiencies, this peak efficiency will be less than the peak efficiency of the larger more efficient turbines In any event, the difference is very small between the efficiencies for the size turbines (35 - 140 MW) being considered for this project

516

Also, the projected daily load profiles for the Power Company indicate that the combined cycle plants will be operated at partial loads very infrequently, thus further reducing the importance of evaluating efficiency as a screening criteria Therefore, efficiency was not included in the criteria at this point but will be considered when the number of configuration options is reduced from five to two

3 Conclusion

Table 5-1 represents the results of the initial plant configuration screening required for the Station Combined Cycle Conversion Project The Table indicates that Configuration 1 (2-70 MW Steam Turbines) and Configuration 2 (4-35 MW Steam Turbines) are significantly better options than Configurations 3, 4 and 5, and therefore, warrant further study before a final selection is made See Table 5-1 for definition of configurations

5 3 2 Screening

1 Capital Cost Factor

The capital cost factor represents the magnitude of the capital costs for the various configurations A higher rating is received for those options which have the lower capital costs

To arrive at capital cost estimates for the five configuration options only costs for those items which are dependent on the number of STG's were considered For example, the cost of the HRSG's or the Cooling Tower will be the same for each of the five options Aside from the cost of the STG/condenser and associated auxiliaries, items which will be affected by the number of STG's include the following

a Electrical Equipment

b Instrumentation & Controls

c Piping

d Foundations

517

Table 5-1

CAPITAL COST FACTORS

A CAPITAL COST FOR EACH TURBINE RATING ($ MILLIONS)

	STEAM TURBINE	CONDENSER	TOTAL
35 MW	5 0	0 5	5 5
70 MW	7 0	0 8	7 8
105 MW	9 0	1 1	10 1
140 MW	11 0	1 4	12 4

B CAPITAL COST FOR EACH CONFIGURATION ($ MILLIONS)

	CONFIGURATION				
	1	2	3	4	5
Steam Turbine	14 0	20 0	11 0	17 0	14 0
Condenser	1.6	2 0	1 4	1 8	1 6
TOTAL	15 6	22 0	12 4	18 8	15 6
Configuration Rating	7	1	10	4	7

518

These items represent a relatively small percentage of the STG costs and therefore will have little impact on differentiating the costs of the five configuration options Also, these costs, to a degree, will approximate a fixed percentage of the STG costs, thus further lowering the importance of their inclusion at this stage of the study For the purpose of this analysis, estimated costs for the STG/condenser and auxiliaries (including installation) will be compared to determine the relative ranking of the five options in the cost factor category

Table 5-2 provides cost estimates for the five configurations The costs were provided by vendor quotes obtained from STG and condenser manufacturers Based on the information in this table, Configuration No 3 (one STG) is the least expensive option, so this configuration is ranked 10 in the cost category On the other hand, Configuration No 2 (four STG'S) is the most expensive option, so this configuration is ranked I in the cost category

The ratings of the other options are based on their respective capital costs relative to the highest and lowest configurations

2 Availability

The overall availability of a system is dependent on 1) the availability factor of individual components and 2) the configuration or schematic arrangement of the components In the case of the five configurations being considered, the one with the highest estimated availability will be given a rating of 10 and the lowest a rating of

1 Those in between will receive a rating reflecting their availability relative to the highest and lowest configurations

579

Table 5-2

PACKAGE PROPOSED BY WESTINGHOUSE
TO UPGRADE NEVADA POWER 501B5 UNITS TO 501B6 UNITS

Item	Description of Item	Result or Reason for Item
1	Change 1st stage turbine nozzles from the three-vane cluster design to single vane design	Increased firing temperature, easier maintenance
2	Change 1st stage turbine blade ring	Increased firing temperature
3	Full rotor inspection (Class IIB)	Rotor availability for checkup
4	Stronger Row 2 Compressor Diaphragm	Needed to withstand increased aerodynamic loads due to IGV operations at part load or cold day conditions
5	Coat Compressor Blades	Return compressor performance to as-new rating
6	Coat Compressor Diaphragms	Return compressor performance to as-new rating
7	Replace Transition Pieces	Increased firing temperature
8	Replace Combustor Baskets	Increased firing temperature
9	Replace Inner & Outer Transition Seals	Increased firing temperature

Note Westinghouse also indicated that they would propose a new controls modification for the Clark Units, but they did not provide any details of the modification

5-20

Using data from the North American Electric Reliability Council Equipment Availability Report 1975-1984 (NAERC) availability factors were determined for the following major items

		Percent
•	Boiler (modified for applicability as MRSG)	88 0
•	CTG (similar size, multiple starts)	82 0
•	STG 35 MW	95 25
	70 MW	94 25
	105 MW	93 70
	140 MW	93 1
•	Condenser (very slight variation (decrease] with size)	98 0
•	Condensate Pumps	99 8
•	Circulating Pumps	99 7
•	Boiler Feedpumps	99 8
•	Cooling Tower	99 9

As can be observed from the above data, the second five (condenser to cooling tower) items are statistically so reliable that differences in plant configuration will not be significantly influenced by these items Also the overall plant availability factor will not be affected significantly by changing the arrangement or redundance of these items For instance, the difference between two 100% boiler feedpumps and three 50% pumps is beyond the accuracy of the data

Therefore, the availability comparison will focus on the three major components (CTG, HRSG and STG)

<u>Configuration 1 (2) 70 MW Steam Turbines</u>

Train 1

A_1 = GT_1 x HRSG

A_1 = 82 x 88 = 72

A_2 = same as A1 = 72

521

The probability of at least one unit being able to operate is given by the following

$A_1 \times A_2 = 72 \times 72$	=	518
$A_1 \times (1 - A_2) = 72 \times 28$	=	202
$(1 - A_1) \times A_2 = 28 \times 72$	=	202
		922
$(1 - A_1) \times (1 - A_2) = 28 \times 28$	=	078
		1 000

Train 1 availability is given by

AF_1 = STG/HRSG's x STG (70MW)

$AF_1 = 922 \times 942$ = 8685

Train 2

AF_2 = same as AF_1 = 8685

The overall availability is

$1\ 0 - (1 - AF_1)(1 - AF_2) =$ 98 3% Conf 1

Configuration 2 (4) 25 MW Steam Turbines

$AF_1 = AF_2 = AF_3 = AF_4$ = GT x HRSG x STG

= 83 x 88 x 9525 = 6873

The overall availability is given by

$1\ 0 - (1 - AF_1)(1 - AF_2)(1 - AF_3)(1 - AF_4) =$ 99 0% Conf 2

Configuration 3 (1) 140 MW Steam Turbine

The probability of at least one of the four CTG/HRSG trains operating is given by 1 - (1 - AF_1) (1 - AF_2) (1 - AF_3) (1 - AF_4) = 9938 = AF
where AF_1 = AF_2 = AF_3 = AF_4 = 72 from Conf 1

The overall probability is

AF x STG (140) = 9938 x 931 x 931 = 92 5% Conf 3

Configuration 4 (1) 70 MW STG & (2) 35 MW STG

From Conf 1 AF_1 = 8685 (2 CTG/HRSG & 70 MW STG)
From Conf 2 AF_2 = AF_3 = 6873 (CTG/HRSG & 35 MW STG)

The overall probability is

1 0 - (1 - AF_1) (1 - AF_2) (1 - AF_3)
1 0 - (1315) (3127) (3127) = 98 7% Conf 4

Configuration 5 (1) 105 MW STG & (1) 35 MW STG

Train has three CTG/HRSG's, the probability of any one operating is

1 0 - (1 - A_1) (1 - A_2) (1 - A_3) = 978
where A_1 = A_2 = A_3 = from Conf 1

A1 = CTG/HRSG's x STG (105 MW)
= 978 x 931 = 910
AF2 = 6873 from Conf 2

The overall availability is

1 0 - (1 - AF1) (1 - AF2)
1 0 - (09) (3127) = 97 2% Conf 5

Summary

Configuration	Availability	Rating
1	98 3%	8
2	99 0%	10
3	92 5%	1
4	98 7%	9
5	97 2%	6

3 Operability & Maintainability

This category represents the degree of complexity for operating and maintaining the combined cycle facility in the various configurations The more complex the operation and maintenance (O&M) of the facility, the lower will be the ranking of the configuration in this category Options 4 and 5 were ranked lowest because both of these options involve the use of STG's with different ratings For example, Option 4 consists of one 70 NM S7G and two 35 MW STG'S Similarly, Option 5 consists of one 105 MW STG and one 35 MW STG This type of arrangement will add significantly to the O&M of the facility in that the operators will require training on two different machines, as opposed to Options I or 2 which consist of multiples of identical units Also, operators will experience additional difficulty in the day-today management (i e , stocking, handling, locating) of spare parts (See Criteria No 5 for the cost aspects of spare parts management) In addition, Options 4 and 5 will be more difficult to operate on a continuing basis, in that decisions to switch CTG's with STG's after equipment failure will be more complex Between Options 4 and S Option 5 is given a slight advantage because less total units are involved (two vs three) By the same logic, Option 3 is rated slightly higher than Option 1 which is rated slightly higher than Option 2, because Option 3 consists of only one unit total versus two total units for Option I and 4 total units for Option 2 However, options 1, 2 and 3 are far superior to Options 4 and 5 due to the fact that all units within the same configuration are identical

524

4 Single Loss Criteria

Each configuration option is ranked for single loss criteria on a scale of 1 to 10 with "10" representing the most acceptable option, "1" representing the least acceptable option and "0" representing a totally unacceptable option

To determine the ranking of each configuration option for single loss criteria, the PC system data projected for the later year was analyzed for the following conditions

a Spinning Reserve Loss of spinning reserve after a STG trip

b Required Reserve Loss of required reserve during outages

The spinning reserve is defined as the reserve generating capacity connected to the system which is ready to supply electrical load The PC system has 125 MW capacity as spinning reserve and it is PC's requirement that any single failure should not result in loss of more than 125 MW

The required reserve requirement is 20% of the peak load as presented in the Power Company's Annual Budget Capacity Factor Reports

Column 3 of Table 5-3 shows the percent loss of spinning reserve per STG and Column 4 indicates an average percent loss per STG for the total configuration Similarly, Columns 5 and 6 show percent loss of required reserve per STG and average percent loss per STG per configuration respectively

Column 7 of Table 5-3 shows the ranking of each configuration which is derived from the results in Columns 4 and 6

Configuration 3 is ranked as "0" as it is not acceptable because the loss of the single STG results in a greater generation (MW) loss than dictated by the spinning reserve criteria (140 MW versus 125 MW)

Table 5-3

Configuration No.	Quantity/ Size (MW) of Steam Turbines (STG)	Loss of Spinning Reserve/STG %	Average Per STG %	Loss of Required Reserve/STG %	Average Per STG %	Rating
COL 1	COL 2	COL 3	COL 4	COL 5	COL 6	COL 7
1	2/70	56	56	19 13	19 13	8
2	4/35	28	28	9 56	9 56	10
3	1/140	Over 100%	Over 100%	38 25	38 25	0
4	1/70	56	37 33*	19 13	12 75**	9
	2/35	28		9 56		
5	1/105	84	56	28 69	19 12	8
	1/35	28		9 53		

NOMINAL SPINNING RESERVE 125 MW

NOMINAL REQUIRED RESERVE 366 MW

* (1 x 56 + 2 x 28)/3 = 37 33

** (19 13 x 1 + 9 56 x 2)/3 = 12 75

However when operating in the combined cycle mode the loss (trip) of one CTG will result in a total loss of 105 MN (70 MW for CTG + 35 MW for the STG) or higher depending on the ambient temperatures This failure is not considered as it has the same effect on each configuration and the loss of power (MW) is less than 125 MW

5 Spare Parts Management

This category represents the Owner's ability to manage an inventory of spare parts for the steam turbines The highest ranking is awarded to those options with the highest spare parts capability for a fixed budget dollar amount For example, Options 4 and 5 are ranked the lowest since it will be difficult to maintain a spare parts inventory for two different steam turbine units Also, Options 4 and 5 will result in a more complicated spare parts inventory control program and will result in increased warehouse space with a similar number of spares per turbine rating On the other hand, Options 1, 2 and 3 are ranked highest because each of these options consist of multiples of identical units Of these three, Option 2 (4 steam turbines) would be the most favorable since individual parts will be less expensive than for Options 1 and 3, which consist of larger units This will make it possible to stock larger quantities of spare parts or make it feasible to stock a larger quantity of parts which would result in higher cost for the other options

6 Land Use

The configuration options have been assigned a value, from I to 10, determined by the area required for each option The option using the least area has a value of 10, the one using the most area has a value of 1

The components used to determine the areas are the STG and accessories, the condenser including tube removal, condensate pumps and unloading bay Other components, such as the HRSG'S, cooling tower, etc are not included since they are approximately the same for all options

The dimensions used for calculating these areas are measured from the outer edge of equipment, north-south and east-west, including tube and rotor removals The open areas within the envelopes will be used for equipment laydown during maintenance

The areas for the two different arrangements (bottom exhaust vs, topside exhaust) are similar See Figure 5-8, which represents a typical layout for a 70 MW unit (bottom exhaust and top exhaust) This sketch was used as the layout basis for each of the five configurations For configuration comparison purposes, the larger of the two, the bottom exhaust arrangement, was used

5 4 Plant Configuration Selection and Preliminary Descriptions

5 4 1 Rationale for Selection of Recommended Configuration

One of the first considerations in comparing the two alternate configurations (two steam turbine generator units versus four units) is cost In the following sections it can be seen that after obtaining prices for what we believe to be over half the estimated cost of the combined cycle conversion, a cost advantage in favor of the two steam turbine configuration appears which would only widen further if full estimates were prepared for both configurations Even though the cost difference is overwhelming, other factors such as reliability, output, efficiency and construction considerations have been examined sufficiently to determine if there is a significant adverse aspect to the selection of the two steam turbine unit configuration

1 <u>Minimum Cost Differential</u>

Table 5-4 shows a cost comparison of Case 1 (two steam turbine units) and Case 2 (four steam turbine units) for major equipment including installation costs The respective costs are $42,620,800 and $49,752,400, a difference of $7,131,600 Examination of the quantities of balance of plant equipment for each case make it apparent that this difference will become greater because the quantities of auxiliary equipment increase with four steam turbines We thus establish the fact that there is a minimum capital cost difference in favor of the two steam turbine configuration of over seven million dollars and we will discontinue further pricing of the four steam turbine configuration

528

Table 5-4

NEVADA POWER CLARK STATION COMBINED CYCLE CONVERSION (COST ESTIMATE) EFFECTIVE 05/18/87

	CASE 1			CASE 2		
	QUANTITY	UNIT PRICE	TOTAL PRICE	QUANTITY	UNIT PRICE	TOTAL PRICE
MECHANICAL						
1 STEAM TURBINE	2	$9,000 000	$18,000,000	4	$6,000,000	$24,000,000
OIL RESERVOIR & COOLER						
GLAND STEAM CONDENSER						
2 HEAT RECOVERY STEAM GENERATOR (HRSG)	4	$3,250,000	$13,000,000	4	$3,250,000	$13,000,000
BYPASS STACK/DAMPER						
3 COOLING TOWER	2	$1,136,000	$2,272,000	2	$1 136 000	$2,272 000
4 CONDENSER	2	$770,000	$1,540,000	4	$470,000	$1,880,000
STEAM JET EJECTORS						
5 BOILER FEED PUMPS						
HIGH PRESSURE	6			8		
LOW PRESSURE	6			8		
6 CIRC WATER PUMPS	6	$101,000	$606 000	6	$101,000	$6 000
7 LEAEPWTOR	2	$85,000	$170,000	4	$55,000	$220,000
8 CONDENSATE PUMPS	6	$10,800	$64,800	8	$10,800	$86,400
9 GANTRY CRANE	1			1		
10 EMERGENCY DIESEL GENERATOR	1			1		
11 CONDENSATE STORAGE TANK	1			1		
12 BLOWDOWN TANK	2			4		
13 BLOWDOWN HEAT EXCHANGER	2			4		
14 BOILER CHEMICAL FEED SKID	1			1		
15 COOLING TOWER CHEMICAL FEED SKID	1			1		
16 COOLING TOWER MAKEUP PUMPS	3			3		
17 COOLING WATER PUMPS	4			8		
18 CONDENSATE TRANSFER PUMPS	3			3		
19 BLOWDOWN SUMP PUMPS	3			3		
20 DESUPERHEATER	2			4		
21 LUBE OIL STORAGE TANK	1			1		
22 LUBE OIL CONDITIONER	1			1		
23 LUBE OIL TRANSFER PUMP	2			2		
24 CIP WATER PIPING						
25 CIRC WATER VALVES						
26 PIPING						
27 VALVES						
28 PIPE SUPPORTS						
29 INSULATION						
30 SPECIALTIES (TRAPS,STRAINERS ETC)						

BEST AVAILABLE COPY

S29

Table 5-4 (Continued)

NEVADA POWER CLARK STATION COMBINED CYCLE CONVERSION (COST ESTIMATE) EFFECTIVE 05/18/87

	CASE 1			CASE 2		
	QUANTITY	UNIT PRICE	TOTAL PRICE	QUANTITY	UNIT PRICE	TOTAL PRICE
CONSTRUCTION COSTS						
MECHANICAL						
TURBINE ERECTION	2	$900,000	$1,800,000	4	$700,000	$2,800,000
HRSG ERECTION	4	$1,000,000	$4,000,000	4	$1,000,000	$4,000,000
CONDENSER ERECTION	2	$300,000	$600,000	2	$160,000	$320,000
COOLING TOWER ERECTION	2	$284,000	$568,000	2	$284,000	$568,000
BALANCE OF PLANT						
ELECTRICAL						
CIVIL						
SITE PREPARATION						
EXCAVATION						
FOUNDATION						
INSTRUMENTATION & CONTROLS						
GENERAL						
TESTING						
STARTUP						
ENGINEERING						
SUMMARY						
EQUIPMENT						
MECHANICAL			$35,652 800			$42,064,400
ELECTRICAL						
I & C						
CIVIL						
CONSTRUCTION						
MECHANICAL			$6,968,000			$7,688,000
ELECTRICAL						
I & C						
CIVIL						
GENERAL						
TESTING						
STARTUP						
ENGINEERING						
SUBTOTALS						
EQUIPMENT			$35,652,800			$42 064,400
CONSTRUCTION			$6,968,000			$7,688,000
GENERAL			$0			$0
GRAND TOTAL			$42,620,800			$49,752,400

BEST AVAILABLE COPY

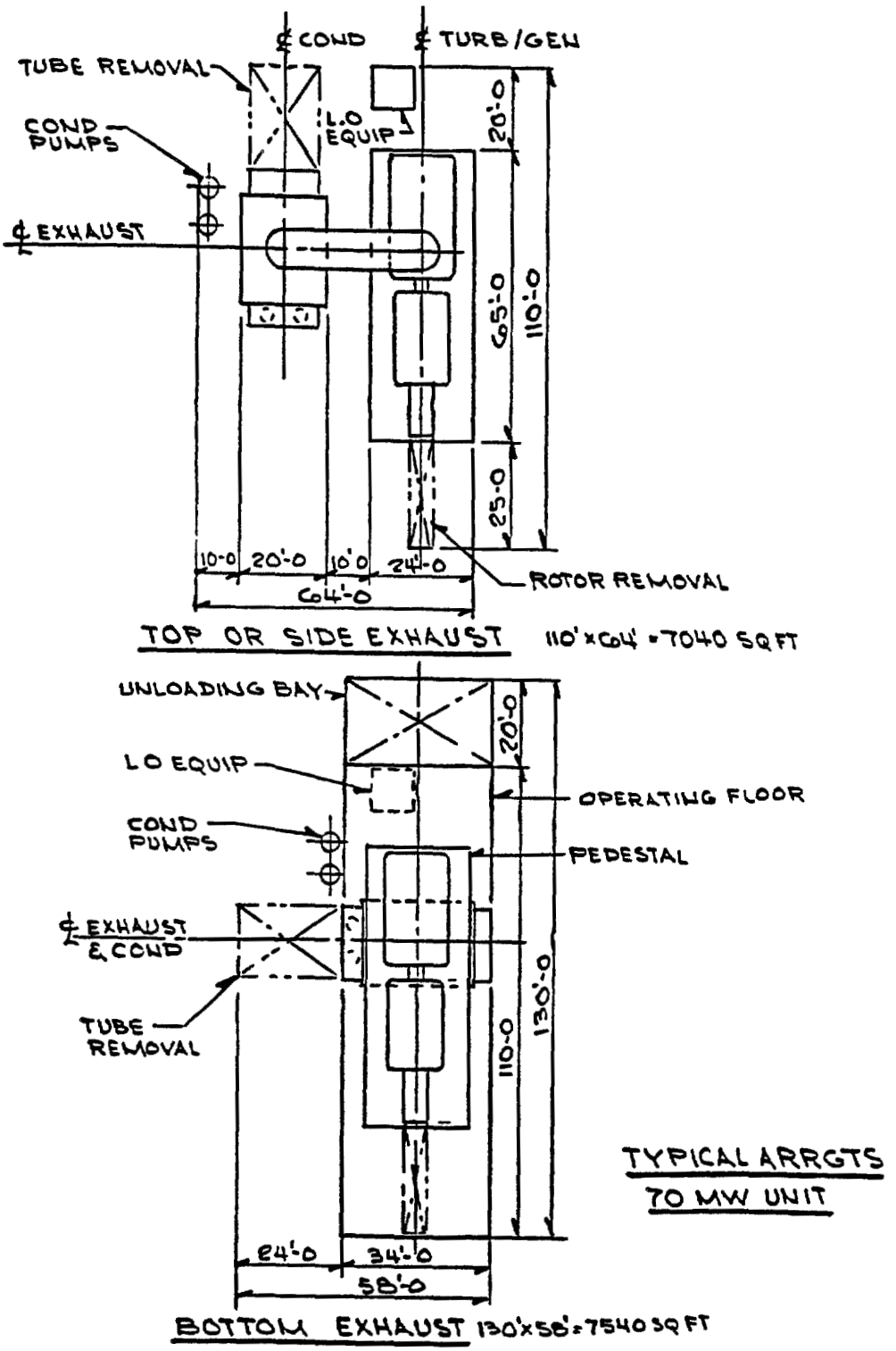

Figure 5-8

531

2 Reliability Considerations

As previously shown in the availability portion of the plant screening, the availability difference between the two 70 MW steam turbine configuration and the four 35 MW configuration is relatively small The difference 99 0% minus 98 3% = 0 7%, is primarily due to two partially offsetting factors, a) the better statistical record of smaller steam turbine generators (95 25% vs 94 2%) and b) the arrangement of two combustion turbine/HRSG's feeding one steam turbine generator (STG) or one combustion turbine generator/heat recovery steam generator (CTG/HRSG) per STG, the former arrangement favoring the larger STG

From previous similar studies, experience shows that the other major equipment associated with a different number of STG's such as condensers, condensate pumps or electrical equipment, do not affect the statistical overall availability because they approach unity either due to inherent design or by redundancies

If the reliability of each arrangement is based on projected capacity factor comparison, the four STG arrangement is still slightly better, 68 7 vs 67 8% This comparison assumes a 100% demand for the units If demand is only partial, (as is expected at the station), then the effect is reduced proportionately Using a 40% demand for full production and a replacement capacity value of $505/kW provided by PC, the capacity factor difference is valued at approximately $750,000 in favor of the four STG arrangement

We may therefore conclude that the reliability of the four STG configuration is only slightly better than the two STG configuration

3 Output Comparison Of Final Candidate Configurations

Output comparisons between the two steam turbine and four steam turbine configurations show a small but definite advantage in power output to the two STG configuration at the half load and maximum load points for the complete plant As load is decreased from either of these load points this advantage becomes slightly greater, but at the quarter load and three quarter load points is sharply reduced because of the lower overall generator and mechanical losses incurred when one or three of the four steam turbine configuration sets is closed down If the instantaneous load factor of the combined cycle power plant were a randomly determined condition, the overall advantage would be weighted slightly toward the

two STG configuration However, since it is planned to have automatic generation control (AGC) capability, it should be possible to keep the combined cycle plant load within the one-quarter load to maximum load range, and the advantage of the two STG configuration would range between 500 and 1900kW, with an average of more than 1100 kW

4 Efficiency Comparison Of Final Candidate Configurations

Efficiency comparison between the two STG and four STG configurations directly follows the output comparison results described in the preceding section Therefore, provided AGC capability is used, the two STG configuration will show a small efficiency advantage over the four STG configuration averaging 0 2 percentage point

5 Construction Considerations

The cost of construction for the two unit scheme is of course less than that of the four unit scenario The four unit scheme is not twice as costly, but closer to a factor of 1 6 more For instance, the selected site would not be twice as large for four units as for two The piping runs from the cooling tower to the condensers would also not increase except for a small increase in diameter of the pipe The connections to the two additional condensers would be the only major increase in construction cost The same holds true for the other piping systems main steam, condensate, feedwater, etc The majority of the construction increase would be in the civil area and equipment erection namely, turbine pedestal construction and turbine erection The contractor would have to his advantage the learning curve connected with the construction of the first two turbines Form work could be re-utilized by the contractor for the two additional turbine pedestals

The largest increase would be connected with the extension of the construction schedule The project's fixed costs would increase, namely supervision, contractors plant (office, trucks, trailers, etc) and maintenance operations

The greatest increase in the cost of the four unit scheme is of course the equipment purchase

5 4 2 Discussion of General Arrangements for Final Candidates

General

A general overall arrangement scheme was developed using information obtained from plant visits, discussions with PC engineers aerial photographs and estimated sizes of equipment, such as the HRSG's, cooling towers, STG's, etc , needed to convert the existing simple cycle CTG installation to combined cycle operations It was felt that there would be a minimum impact on access to existing equipment and facilities, both during construction and for maintenance, if the cooling towers and STG were located west of the combustion turbines The HRSG's are shown in what may be considered the normal location directly behind (north of) the CTG's, in line with the exhaust stack This location appears in all the schemes which will be described

To the east of the existing CTG's are buildings and tanks To the south is the electrical switchyard and to the north (beyond the proposed HRSG's) are brine ponds

Seven layouts were studied and are described in the following Schemes 1 through 7 Scheme 5 was selected and refined

5 4 3 Heat Balance of Recommended Configuration Including Rationale for Its Selection

1 Basis and Assumption

a) Upgraded Combustion Turbine Generator (Model 501B6)

The heat balance presented herein is based upon using the upgraded 501B EconoPac performance data adjusted to 1700 ft site altitude In addition, it is estimated that the HRSG pressure loss will result in an increase of the exhaust gas temperature by 10°F (to 990°F for the same firing temperature) No water injection was assumed, as is the case with the 5 and 6 units Water injection, although not recognized in this heat balance, will increase HRSG heat recovery very slightly on units 7 and 8, but not enough to affect steam cycle parameter selection For the

heat balance prepared during detail design, the effects of water injection will be taken into account

b) Existing Combustion Turbine (Model 501B5)

The existing combustion turbine units are expected to have an exhaust temperature of 965°F when equipped with a heat recovery boiler unit This exhaust temperature is approximately 25°F less than that which would occur if the combustion turbine units were, upgraded The difference could produce essentially the same steam cycle parameters except for the high pressure steam temperature which would have to be appropriately lower for the non-upgraded combustion turbine units The heat balances presented are therefore based upon the same steam cycle pressures as used in the heat balances for the upgraded units, with the high pressure steam temperature reduced by 25°F, fully reflecting the lower exhaust temperature

The other general assumptions made for all of the initial heat balance runs were as follows

- Condenser pressure, 2 inches Hg abs (Tsat = 101°F)
- Deaerator pressure, 20 psia
- Pressure loss between HP steam drum and turbine throttle valves, 60 psi
- Boiler thermal loss, 1 5% of heat transferred
- All water pump efficiencies, 65%
- Subcooling at economizer exits 15°F
- Gas approach temperature (pinch point) in both HP and LP evaporator sections, 30°F
- Economizer sections pressure drop, 30 psi
- Condensate preheater section pressure drop, 20 psi
- Auxiliary power other than water pumps, zero
- Condensate preheater water exit temperature, 195°F
- Boiler blowdown rates for each drum, 1 percent
- Steam turbine stage efficiencies HP, 86 percent, LP, 79 9 percent
- Generator overall mechanical/electrical efficiency, 97 4 percent
- Blowdown flashtank at deaerator pressure with heat recovery from waste water

535

The selected cycle parameter values are not optimized, but are representative of typical combined cycle plant technology and/or the conditions prevailing at the site As such, these values are useful for performing the initial comparative studies used to define the combined cycle configuration to be used in the subsequent tasks, and are subject to further refinement The boiler feedpump system would consist of separate LP and HP section boiler feedpumps, each taking suction from the deaerator

2 Combustion Turbine Upgrade

The combustion turbine unit upgrade to B6 status and the use of the two pressure HRSG configuration are justified by the added power output obtainable from the steam cycle and the consequently greater efficiency achieved from the plant The upgrade of the combustion turbine units results in a total plant capacity increase of approximately 19 1 MW at 59°F ambient and approximately 18 5 MW of 110°F ambient The plant heat rate would also be improved by upgrading the combustion turbine units approximately 60 Btu/kWh better at 59°F, and 50 Btu/kWh at 110°F These performance improvements are valued at approximately $10 7 million at 59°F and $10 3 million at 110°F, either of which exceeds the upgrade costs of approximately $8 million for the combustion turbine units alone Since the costs of the heat recovery boiler units, steam turbine generators and supporting equipment are estimated to be virtually insensitive to the performance changes due to the combustion turbine upgrade, it is estimated that there will be a small but definite positive value to the project if the combustion turbine units are upgraded from their present B5 state to B6

3 Cycle Selection Rationale

The HP feedwater economizer is split, with a low temperature section located alongside the LP economizer and a high temperature section between the HP and LP evaporator sections This maximized heat recovery and power output capability of the steam cycle

Performance surveys showed that with the two pressure HRSG arrangement, steam cycle power output (and efficiency) increase as both throttle temperature and pressure levels were increased This cycle has limited the throttle pressure to 1200 psig as an approximation to an optimization of slowly increasing performance gains

5-36

against additional equipment costs It is also consistent with the steam pressure of the existing units and thus does not introduce an unfamiliar pressure to the operators

The throttle temperature of 940°F is considered to be a maximum based on the available combustion turbine exhaust temperature of 990°F Further optimization and vendor proposals may change this value slightly

The HRSG configuration assumed produces saturated LP steam, some of which is used for deaeration with the remainder going to the induction port of the steam turbine unit The LP steam production from the HRSG is saturated at 105 psig Survey heat balances were made at both 90 psig and 120 psig to confirm that this pressure maximizes power output for the throttle (HP) steam conditions assumed Saturated steam is satisfactory for induction into the steam turbine unit through a moderate pressure loss piping and valve system, and when mixed with the flow exiting the HP steam turbine section, it is superheated by approximately 60°F prior to entering the LP steam turbine section The condenser inlet flow has a nominal wetness of between 12 and 13 percent, which is considered satisfactory for the turbine unit

The deaerator unit operates at a nominal pressure of 20 psia The condensate return is preheated to 195°F in the HRSG before entering the deaerator The blowdown system creates 20 psia steam in the flashtank and the wastewater stream is cooled by the makeup water stream to approximately 90°F before discharge heating the makeup water to approximately 218°F Deaerating steam is taken from the 90 psig header The condensate preheater section exit temperature may have to be adjusted to obtain an appropriate balance between deaerating steam consumption, deaerating effectiveness and satisfactory system operations at part load

A survey was also made of steam system performance as a function of LP steam production rate in the HRSG and indicated that performance is maximized when the approach temperature difference in the LP evaporator is equal to the approach temperature difference in the HP evaporator The approach temperature difference value of 30°F assumed for this heat balance is a nominal value that experience has shown to provide a reasonable balance between performance and cost

4 Part Load Duration

Part load operation of the system is expected down to approximately 65 percent of combustion turbine load The part load operation will be managed with the inlet guide vanes (IGVs) to maintain the combustion turbine exhaust temperature Steam cycle statepoints can then be essentially maintained, with steam flow rates diminishing as the combustion turbine exhaust flow diminishes Below 65 percent combustion turbine load, a from of sliding pressure operation is envisaged that will accommodate the lower combustion turbine exhaust temperature and result in a more effective heat recovery in the HRSG and a more efficient use of the steam turbine generator set than would otherwise be possible with fixed pressure operation

5 Summer Heat Balance

A preliminary summer heat balance has also been developed, which is an approximation based upon initial assumptions of equipment performance changes corresponding to an ambient condition of 110°F and 20 percent relative humidity It is also assumed that the combustion turbines are upgraded to B6 status and the evaporative cooler are in use

Other assumptions are

a HRSG performance, is based on a generalized boiler model

b Cooling tower/condenser system which assumes that tower basin water temperature will increase 5 5°F for every 10°F increase in wet bulb temperature, and that the condenser approach temperatures will remain essentially unchanged

"Real" performance data which will only become known at the time equipment is purchased, principally for the steam turbines, condensers, cooling tower and HRSG's, are needed for the definitive beat balance

538

6 Cold End Corrosion

Operation of the combined cycle power plant on natural gas fuel is not expected to produce any significant condensation on the condensate preheater section of the boiler, except during rare conditions associated with high humidity and extreme cold ambient conditions Even then, the affected zone should be limited to a few tube rows that may be suitably protected by surface coating or material selection However, operation on fuel oil would always produce a severely corrosive environment throughout much of the condensate preheater section of the HRSG it were kept in operation it is recommended that under such conditions, this section of the HRSG be removed from service The condensate would be sent directly to the deaerator which would then require a larger flow of 90 psig drive steam from the plant LP steam header The output and efficiency of the power plant would therefore be somewhat reduced during such oil firing episodes, but the cold end of the HRSG would be effectively protected from rapid corrosion

539

WINTER CONDITION HEAT BALANCE

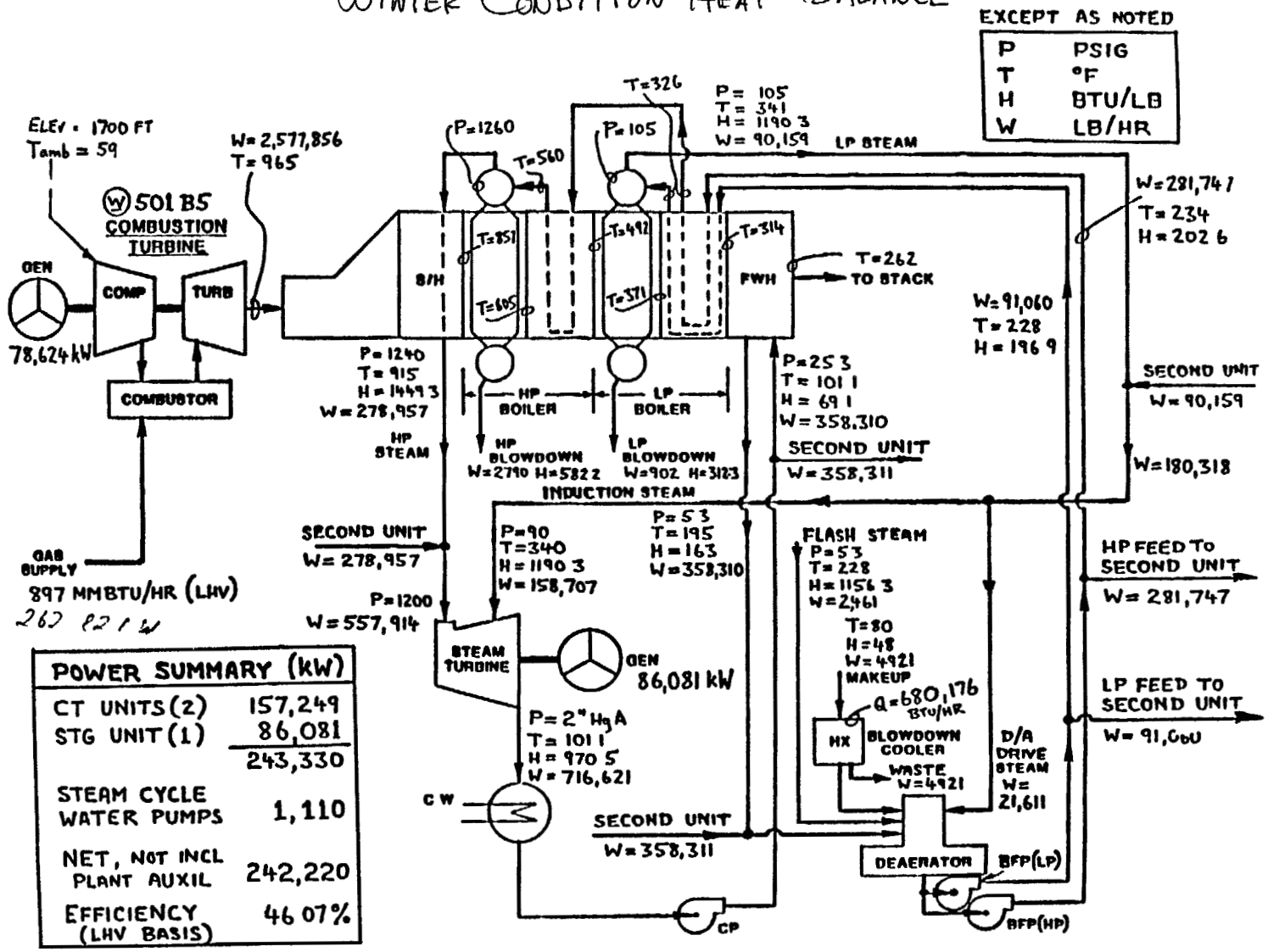

POWER SUMMARY (kW)	
CT UNITS (2)	157,249
STG UNIT (1)	86,081
	243,330
STEAM CYCLE WATER PUMPS	1,110
NET, NOT INCL PLANT AUXIL	242,220
EFFICIENCY (LHV BASIS)	46 07%

COMBINED CYCLE GENERATION SYSTEM

WINTER CONDITION HEAT BALANCE

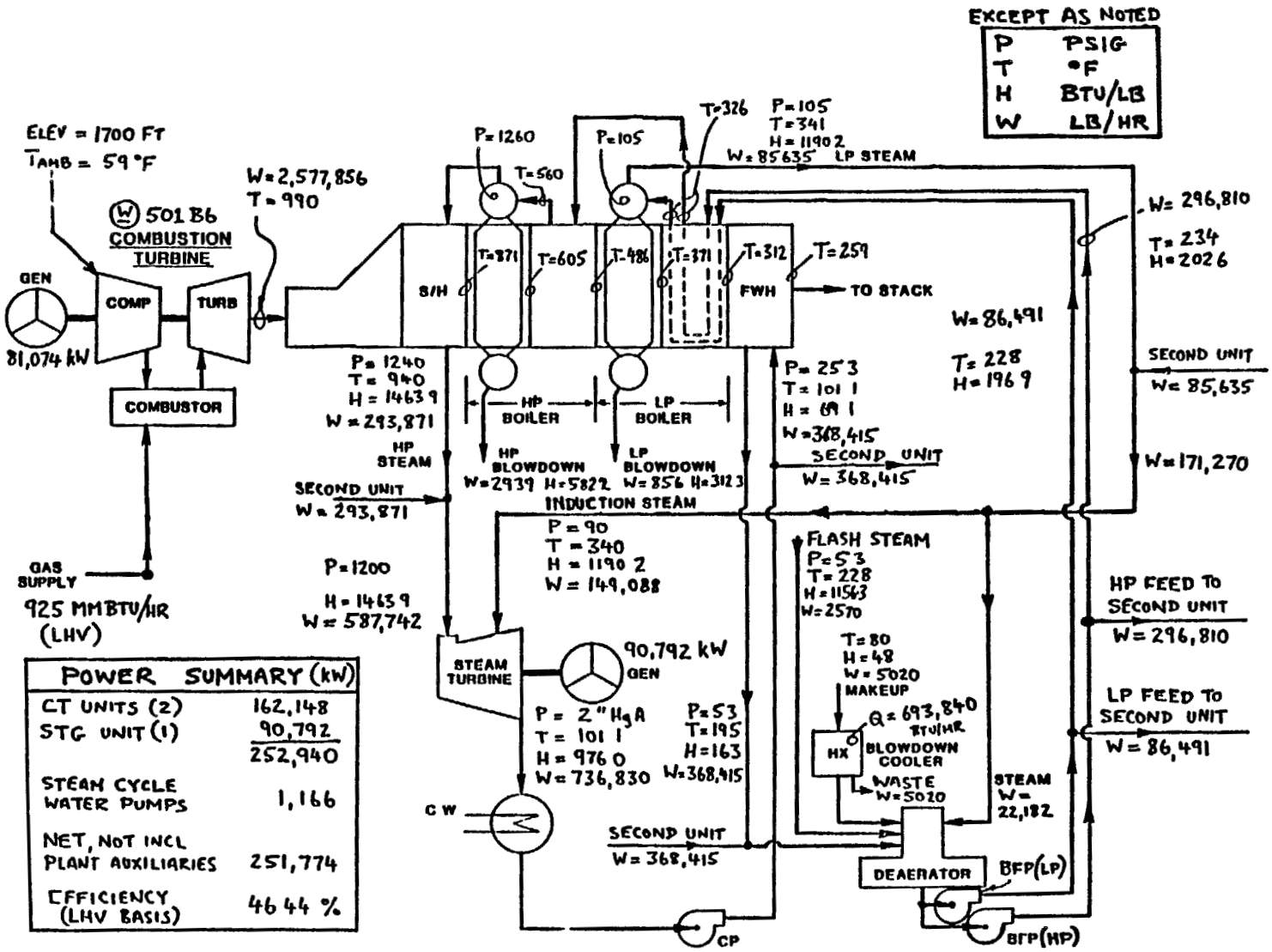

POWER SUMMARY (kW)	
CT UNITS (2)	162,148
STG UNIT (1)	90,792
	252,940
STEAM CYCLE WATER PUMPS	1,166
NET, NOT INCL PLANT AUXILIARIES	251,774
EFFICIENCY (LHV BASIS)	46.44 %

COMBINED CYCLE GENERATION SYSTEM

COMBINED CYCLE GENERATION SYSTEM

SUMMER CONDITION HEAT BALANCE (PRELIMINARY)

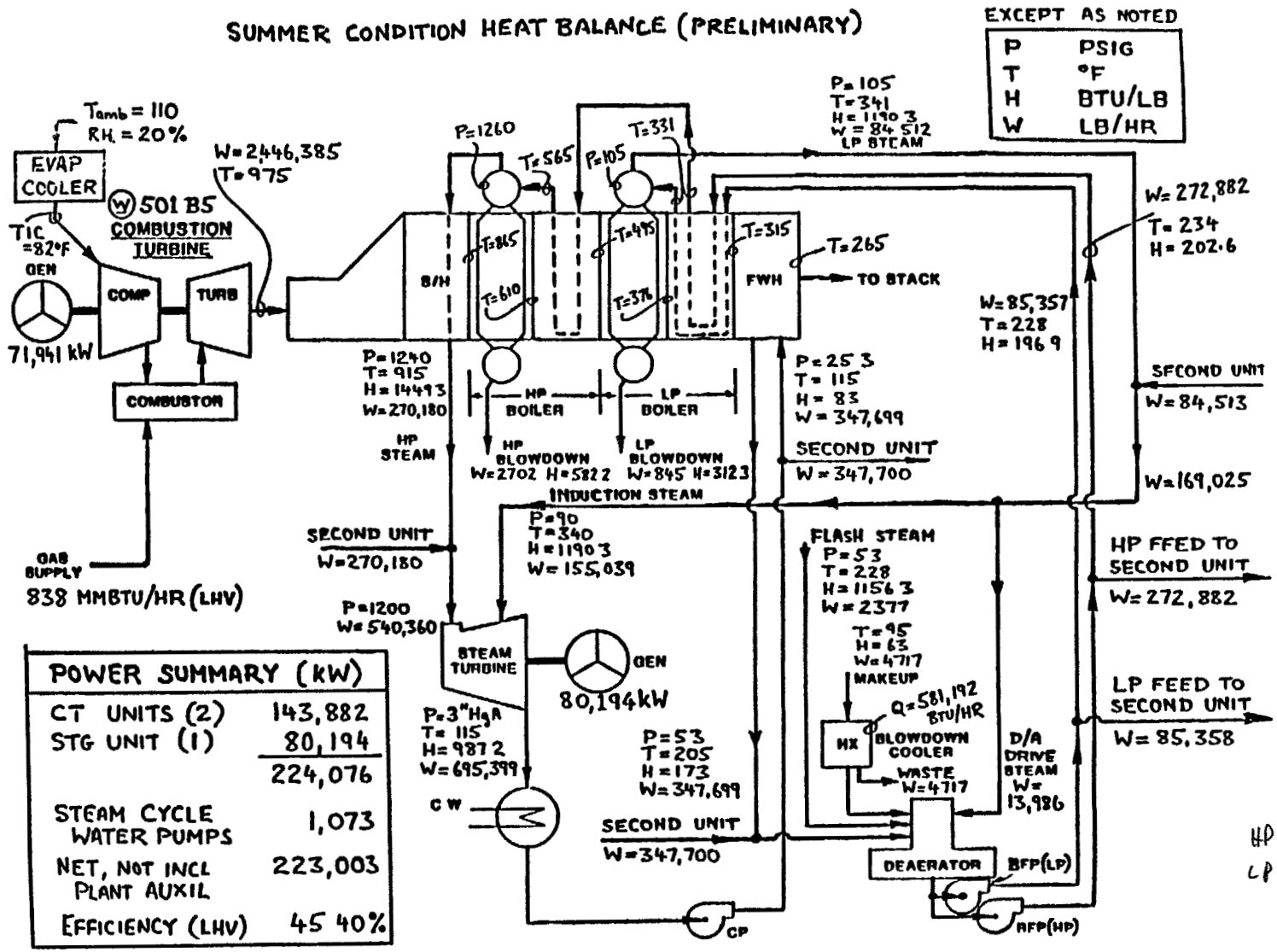

POWER SUMMARY (kW)	
CT UNITS (2)	143,882
STG UNIT (1)	80,194
	224,076
STEAM CYCLE WATER PUMPS	1,073
NET, NOT INCL PLANT AUXIL	223,003
EFFICIENCY (LHV)	45.40%

Blowdown
HP 2702
LP 845
3547

242

COMBINED CYCLE GENERATION SYSTEM

SUMMER CONDITION (PRELIMINARY)

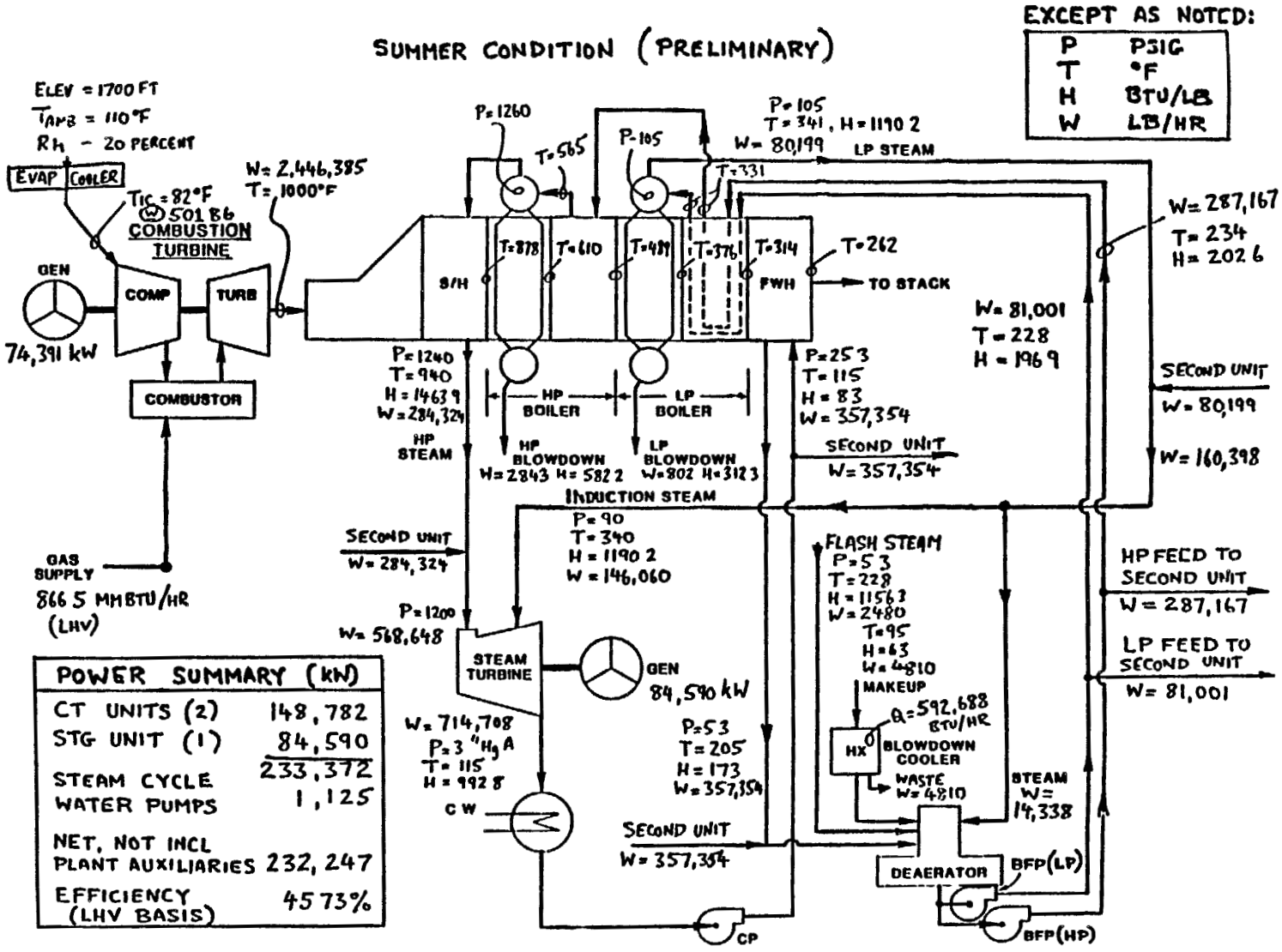

POWER SUMMARY (kW)	
CT UNITS (2)	148,782
STG UNIT (1)	84,590
	233,372
STEAM CYCLE WATER PUMPS	1,125
NET, NOT INCL PLANT AUXILIARIES	232,247
EFFICIENCY (LHV BASIS)	45.73%

Combined Cycle
Principles Course
Module 6

Gas/Turbine Generator

FCS
Fossil Consulting Services, Inc.

Columbia, Maryland

TABLE OF CONTENTS

Section		Page
6 0	GAS TURBINE/GENERATOR	1
6 1	Introduction	1
6 1 1	Overview	1
6 1 2	Gas Turbine Design Considerations	5
6 1 3	Classification of Gas Turbines	15
6 1 4	Unique Characteristics of Gas Turbines	19
6 1 5	Advanced Gas Turbine Designs	22
6 2	Gas Turbine Main Components	24
6 2 1	General Description	25
6 2 2	Air Inlet Equipment	27
6 2 3	Compressor	30
6 2 4	Combustion Section	34
6 2 5	Turbine Section	43
6 2 6	Exhaust Section	48
6 2 7	Bearings	49
6 2 8	Gears and Couplings	58
6 2 9	Turbine Base and Supports	61
6 2 10	Unit Enclosures	63
6 3	Gas Turbine Generator	63
6 3 1	Construction	67
6 3 2	Excitation System	78
6 3 3	Hydrogen and Seal Oil Systems	78
6 4	Gas Turbine Support Systems	79
6 4 1	Electrical System	79
6 4 2	Inlet and Exhaust Systems	80
6 4 3	Starting Systems	88
6 4 5	Lubricating Oil System	102
6 4 6	Cooling Water/Air Systems	105
6 4 7	Water Wash System	109
6 4 8	Water/Steam Injection System	110
6 4 9	Fire Protection System	115
6 4 10	Gas Turbine Controls	117

TABLE OF CONTENTS (CONTINUED)

Section		Page
6 5 Operation and Maintenance Considerations		124
6 5 1	Operating Modes and Their Effect on Gas Turbine Maintenance	124
6 5 2	Maintenance Philosophy and Planning	125
6 5 3	Maintenance Features of Gas Turbine Design	128
6 5 4	Major Factors Influencing Maintenance and Equipment Life	131
6 5 5	Maintenance Inspections	138
6 5 6	Parts and Manpower Planning	147
6 5 7	Inspection Intervals	148
6 6 Gas Turbine Performance and Reliability		149
6 6 1	Factors Affecting Gas Turbine Reliability	150
6 6 2	Performance Improvements	152
6 6 3	Combustion System Improvements	154
6 6 4	Emissions Reductions	155
6 6 5	Control System Reliability Improvements	157
6 6 6	Impact of Operating Mode on Gas Turbine Heat Rate, Reliability, and Performance	158

5 of 6

6 0 GAS TURBINE/GENERATOR

6 1 Introduction

This Module discusses the design and construction, classification, and characteristics of gas turbines Their main components, support systems, and operating and maintenance principles will be covered A brief discussion on the generator and excitation system is included The Module also discusses gas turbine performance and reliability, the objective of which is to create awareness of these issues, and identify what operators can do to optimize gas turbine performance and reliability

The gas turbine system consists of a number of sub-systems that work together to ensure safe and efficient operation of the unit To understand the design, function, operation, and control of gas turbines it is first essential to grasp the underlying principles This chapter addresses the theory and principles of gas turbine design and operation as applied to the sub-systems and then addresses the unit as a complete system

6 1 1 Overview

Gas turbine operation is based on a thermodynamic cycle called the Brayton Cycle The Brayton Cycle theoretically operates as a constant pressure cycle, i e , in a simple gas turbine cycle, combustion and exhaust occur at a constant pressure In a gas turbine, compression and expansion occur continuously, rather than intermittently as in a reciprocating internal combustion engine Therefore gas turbine power is available continuously, whereas reciprocating engine power take-off is available only during the expansion stroke

The gas turbine, like any other heat engine, is a device for converting part of a fuel's chemical energy into useful available mechanical power The energy transfer occurs in a manner similar in many ways to the system used by a four-cycle reciprocating internal combustion engine system **Figure 6-1** illustrates the similarities between the two cycles

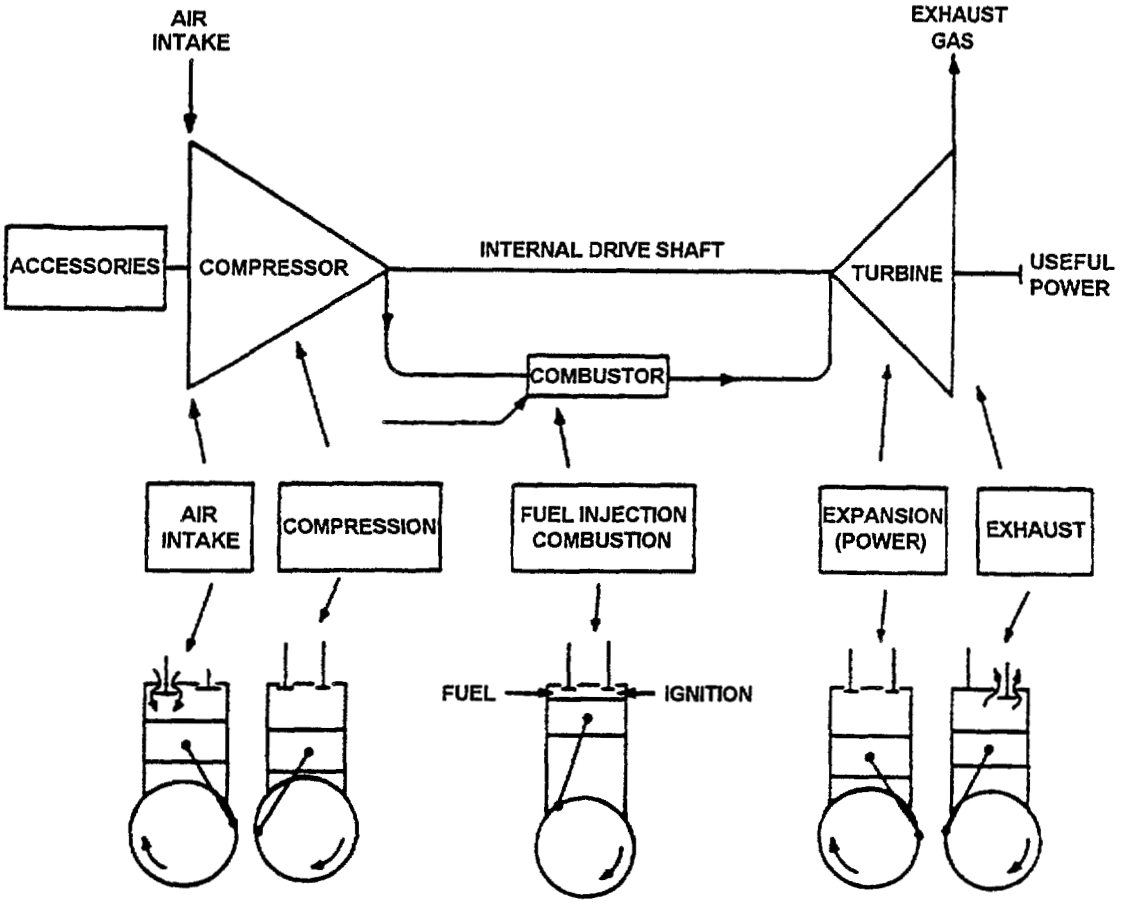

Figure 6-1 Similarities Between Gas Turbine and Reciprocating Engine Cycle

548

As indicated by this illustration, air is drawn into the compressor, usually through a filter system or air washer to remove any harmful solid particles from the air stream This air is then compressed to the proper value for the particular design application by a multi-stage axial flow compressor The hot, compressed air is then fed to the combustion chambers where it mixes with injected fuel In the combustion chambers, the fuel burns and adds energy to the air

Combustion is initially started by a spark plug or flame ignitor in one or more chambers Once established, combustion is sustained by a continuous flow of air and fuel, and the ignition system can be shut down It is not necessary to have ignitors in all combustion chambers since cross-fire tubes, connecting the chambers near their head ends, permit each chamber to light off adjacent chambers Some gas turbines are designed to have one or two large combustion chambers rather than multiple small combustion chambers, and cross-fire tubes are therefore not needed

The combustion process raises the gas to a flame zone temperature of 3000 - 3500°F This temperature is immediately reduced to usable values by the mixing of secondary air that enters the combustion chamber through holes placed in the combustion liners

The hot high-pressure gas mixture is then ducted to the turbine section, where it expands to exhaust pressure In the expansion process, energy is removed from the gas to drive the compressor, auxiliaries, generator, and other load equipment

The spent gas is allowed to flow to the exhaust stack system Since there is still heat energy in this gas, the heat can be put to use in a variety of ways such as air or water heating, process drying, or as hot-air-feed supply to a separately fired boiler Any of these recovery methods helps to increase the overall thermal efficiency of the turbine cycle

Figure 6-2 illustrates pressure and temperature levels occurring in a typical gas turbine

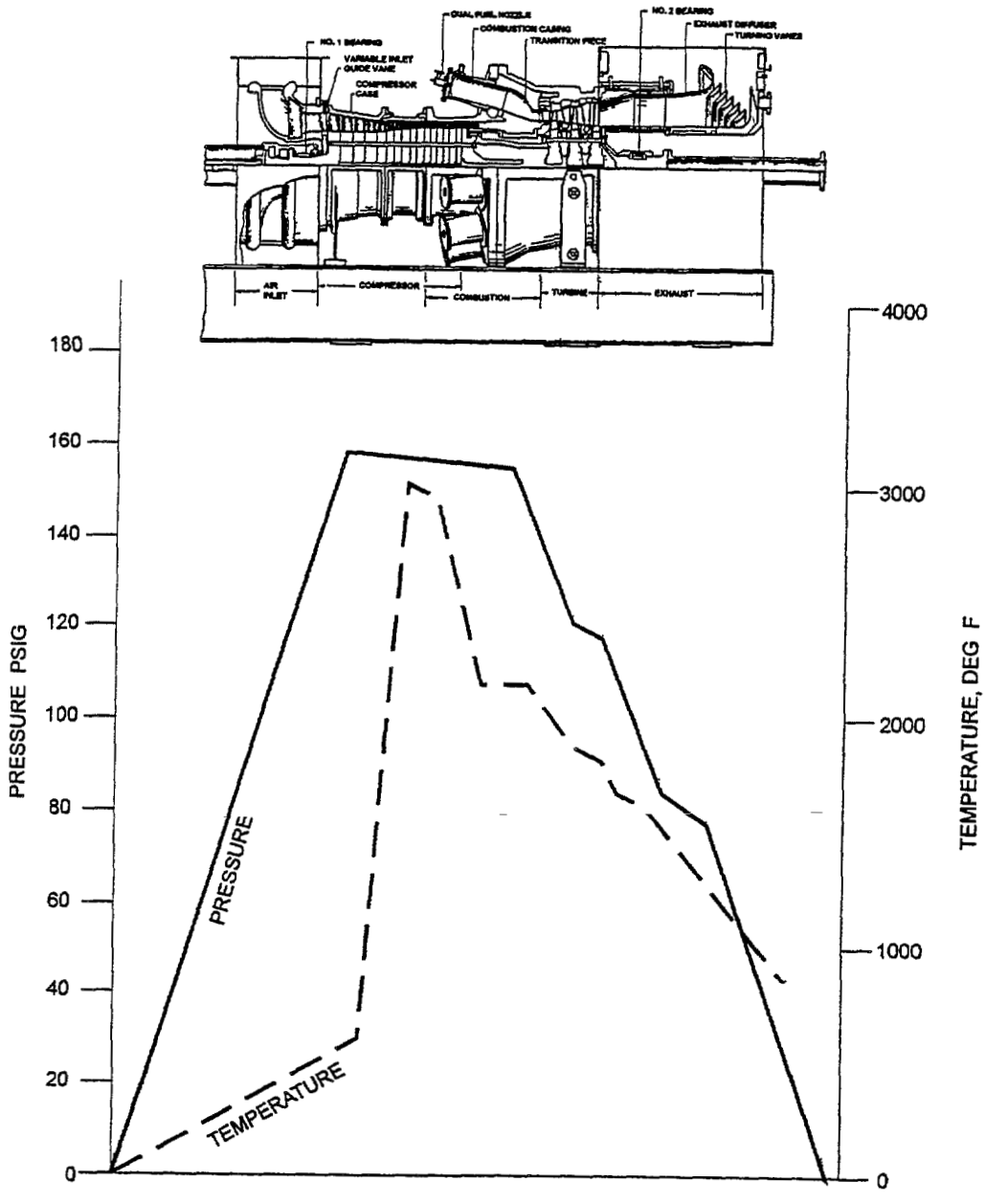

Figure 6-2 Pressure and Temperature Levels Occurring in a Typical Gas Turbine

550

Figure 6-3 shows some typical horsepower levels which occur in a simple-cycle, single-shaft, 7000 horsepower gas turbine Larger sized units have proportionally higher power values

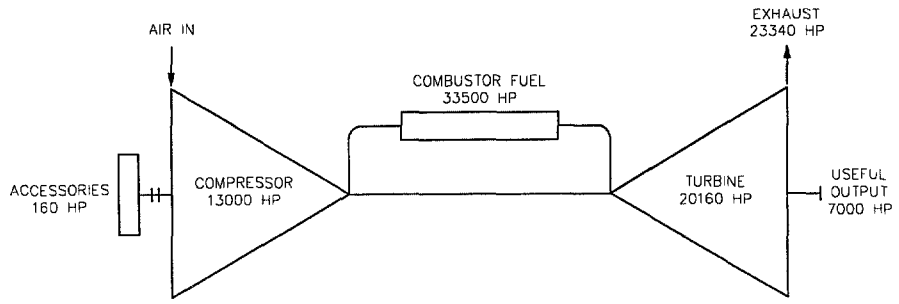

Figure 6-3 Typical Horsepower Levels for a 7,000 HP Gas Turbine

6 1 2 Gas Turbine Design Considerations

The design of major gas turbine components has evolved over the last fifty years and resulted in machines having high reliability and availability in addition to increased output In order to achieve these advances each of the major gas turbine systems and components was analyzed and designed to ensure the required performance characteristics For example, compressor designs incorporated more efficient blade profiles, turbine designs adopted higher firing temperatures by using better materials and cooling techniques, and overall reliability has been improved by adding redundant equipment The following sections address design considerations for each major component in the gas turbine, and how improvements in reliability and availability have been achieved

Compressor

Several types of compressors are available for gas turbine applications These include centrifugal, intermeshing-lobe types, and axial-flow compressors The axial-flow compressor is the most often used because of its ability to pump large volumes of air at higher efficiency levels than either the centrifugal or lobe type compressors

551

Both the centrifugal and axial-flow compressors compress air by imparting momentum to the air by means of rotating elements and then converting that momentum to pressure in suitable stationary passages In the centrifugal type compressor, air is drawn in at the center, or "eye" of a rapidly rotating vaned disc Centrifugal action on the rotating air mass forces it to the tips of the disc where it is flung off at high tangential velocity Suitably shaped stator blades "catch" this fast moving stream and slow it down in such a manner as to increase the pressure About half of the pressure rise occurs in the rotor and the remainder in the stator passages

Axial flow compressors are designed to move air axially through the blading with essentially no radial travel, **Figure 6-4** Axial flow compressors are made up of rows of airfoil-shaped blades, with each set of rotating blades followed by a set of similar stationary blades The rotor blades impart momentum to the air and increase its pressure The following stationary blades convert that momentum to additional pressure rise

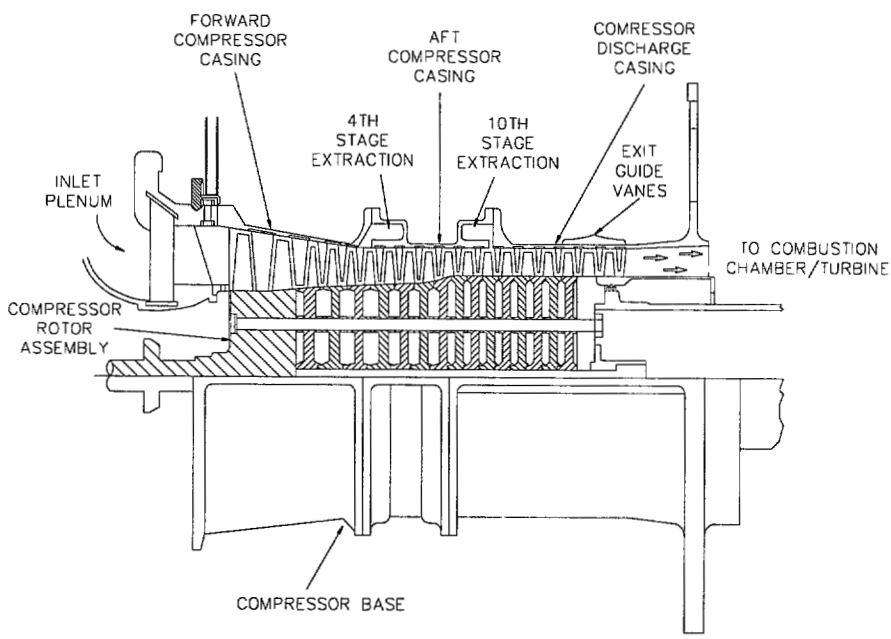

Figure 6-4 Axial Flow Compressor

Lobed compressors are positive displacement machines where the air is "squeezed" in the passages of intermeshing rotors This type of compressor is difficult to manufacture and is not used extensively in this country

In general, centrifugal compressors compress more air per stage than axial-flow compressors However, due to involved diffuser passages, centrifugal compressor efficiencies are lower Centrifugal compressor efficiency is typically around 80 - 84 percent, whereas the axial type compressor efficiency is frequently better than 85 percent

Most axial flow compressors used with gas turbines are designed to deliver air at pressures 10 to 15 times the inlet absolute total pressure The air flow requirement is also dependent on the physical size and speed of the machine The power to drive these compressors varies with air flow and pressure rise At full-load, the compressor uses roughly two thirds the power produced by the turbine section The remaining third produces electrical load Hence, a one percent gain in compressor efficiency produces a 2 percent gain in load-shaft output It is extremely important that the compressor blading be kept clean and maintained in good physical condition so that maximum overall efficiency and capacity can be maintained at all times

A key requirement of axial compressor design is the avoidance of compressor surge during partial speed operation Surge occurs as a result of repeated reversals of flow during startup and shutdown operation If uncontrolled, surge can wreck the rotating components of a compressor in a short period of time Surge is prevented by reducing airflow through the compressor during startup and shutdown by using modulating inlet guide vanes and interstage bleed valves These components are controlled automatically by the turbine control system

Another compressor design consideration is the goal of increasing the pressure ratio Increasing the pressure ratio allows for an increase in the thermal efficiency of the gas turbine cycle Pressure ratio increases are achieved by adding compressor stages, improving the aerodynamic design of the rotating and stationary blades, reducing the blade tip clearances, increasing rotational speeds, inlet air cooling, and by intercooling With increasing pressure ratios, the temperature of the compressed air leaving the last stage of the compressor also increases The last stage temperature is approximately 550°F for a compression ratio of 14 1 This means that higher

temperature resisting alloys are used in the last compressor stages to ensure a 30 year design life at base load

Higher gas turbine output requires an increase in air mass flow This increase in air mass flow results in larger compressor blade dimensions and loads Therefore, stronger materials are selected for these blades and the blading is designed to withstand the higher stresses generated by the increased airflow

During partial load operation in combined cycle configuration, gas turbine exhaust temperature decreases as a result of decreased fuel consumption The lower exhaust temperature results in a decreased steam temperature generated in the HRSG, consequently leading to a drop in steam cycle efficiency Variable inlet guide vanes are provided in the compressor to control compressor inlet air flow during partial load operation to maintain gas turbine exhaust temperature and consequently main steam temperature close to the design value

Combustion System

The combustion zone of a gas turbine is the space required for the actual burning of the fuel and its subsequent dilution by secondary air to reduce the flame temperatures down to usable values These actions normally occur in a group of combustion chambers which may be inside the machine envelope or may be externally contained in "pods" or "silos"

The combustion zone generally comprises an outer casing, an inner casing (or liner) and the necessary air and gas passages A simplified version of a typical combustion system is shown in **Figure 6-5** As is shown in the figure, combustion takes place inside the inner casing The walls of the casing are cooled by air streams which flow through louvers punched in the wall material These airstreams flow close to the walls and prevents the wall material overheating

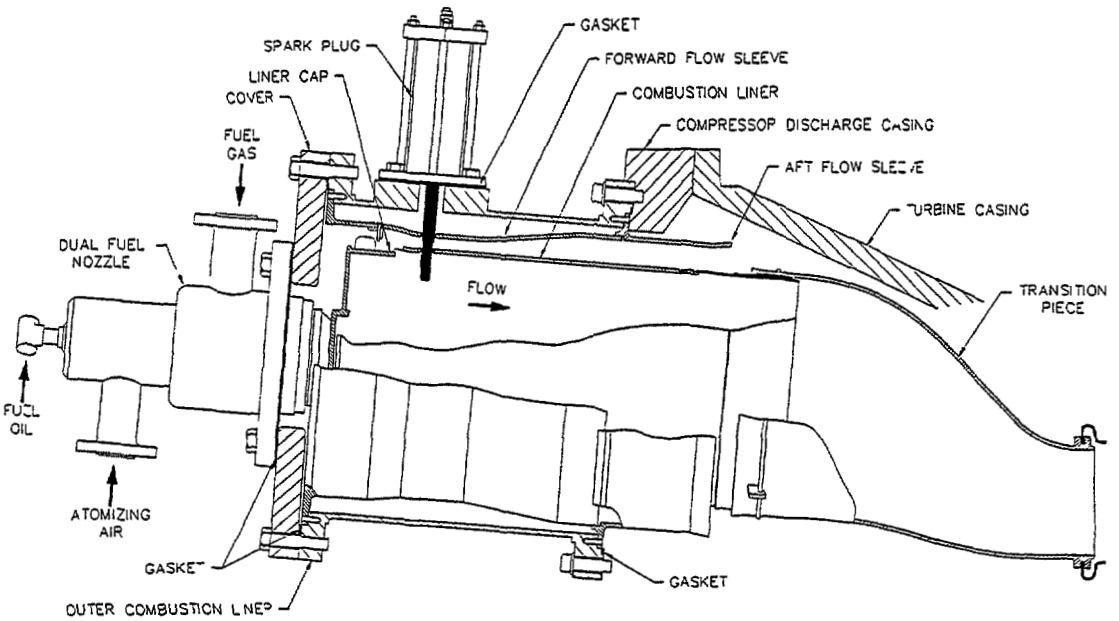

Figure 6-5 Combustion System Components

Larger holes in the wall permit cold air to penetrate and mix with the hot gas stream The larger holes reduce the airstream temperature to the desired level before delivery to the turbine section

The amount of air necessary to cool the liner wall and to dilute the hot gas mixture to rated firing temperature is about four times that required for complete fuel combustion The large amount of "excess air" in the combustor discharge makes it possible to install after-burners in the turbine exhaust when the exhaust is supplied to a separately fired boiler or HRSG

The actual temperature rise which occurs in the combustion zone (discharge temperature minus inlet temperature) depends on the weight ratio of fuel to air (pounds of fuel/pound of air), the inlet air temperature, the fuel lower heating value and the combustion efficiency of the system Combustion efficiency is considered to be the

ratio of actual combustor gas temperature rise to the theoretical rise that would occur by complete burning of the fuel Calculations and measurements show this efficiency to vary between 90 and 100 percent Visual evidence (soot, smoke, carbon deposits) would indicate a combustion efficiency below 100 percent most of the time The lower values of "combustion efficiency" are usually found during starting and low-speed operations

$2H_2 + O_2 \rightarrow 2H_2O$

load?

$\frac{2H_2O}{2H_2} = \frac{1}{2} = 9$

The fuel heating value causes much confusion when computing heat consumption or thermal efficiency for gas turbines When any fuel containing hydrogen is burned in air, a byproduct of combustion is water The percentage of water generated depends on the amount of hydrogen present in the fuel Since all gas turbine fuels contain varying amounts of hydrogen (lighter fuels containing more than heavier fuels), water in the form of superheated steam is an unavoidable product of the combustion process

1 kg H_2 = 9 kg H_2O

about 1,000 B/lb

The heat released by the water vapor when cooling down to approximately room temperature, accounts for the difference between the lower and higher heating values of a fuel Some authorities label these two values "net" and "gross" heating values For calculations involving gas turbine thermal cycles, lower heating values are used Propositions and guarantees, on the other hand, generally deal in higher heating values Therefore, it is important to specify which heating value is being used when dealing with fuels

Unlike a reciprocating engine whose combustion occurs essentially at constant volume, gas turbine combustion takes place at constant pressure For a constant air flow to a combustion chamber, the pressure in the chamber is dependent on the total flow and temperature of gas delivered to the turbine first-stage nozzle With increased fuel flow, the final temperature and total flow (constant air and increased fuel) increases The pressure therefore increases and forces the nozzle to pass additional flow For full-speed operation, this pressure increase amounts to about 15 percent of the no-load pressure when carrying maximum load

full load?

Combustion systems are required to operate at high temperatures and over a wide range of fuel flows from startup to full load operation The combustion systems must be capable of maintaining emissions, exit temperatures, and minimize the pressure drop between the compressor and turbine **Figure 6-6** represents a common type of gas turbine combustion system In this system, multiple combustion cans are

556

repeated

Combustion systems are required to operate at high temperatures and over a wide range of fuel flows from startup to full load operation The combustion systems must be capable of maintaining emissions, exit temperatures, and minimize the pressure drop between the compressor and turbine **Figure 6-6** represents a common type of gas turbine combustion system In this system, multiple combustion cans are placed circumferentially around the compressor discharge in a "can annular" arrangement Each "can" may have a single or multiple fuel nozzles Spark plugs for initiating combustion, and flame scanners to establish the presence of flame are installed in the combustion zone

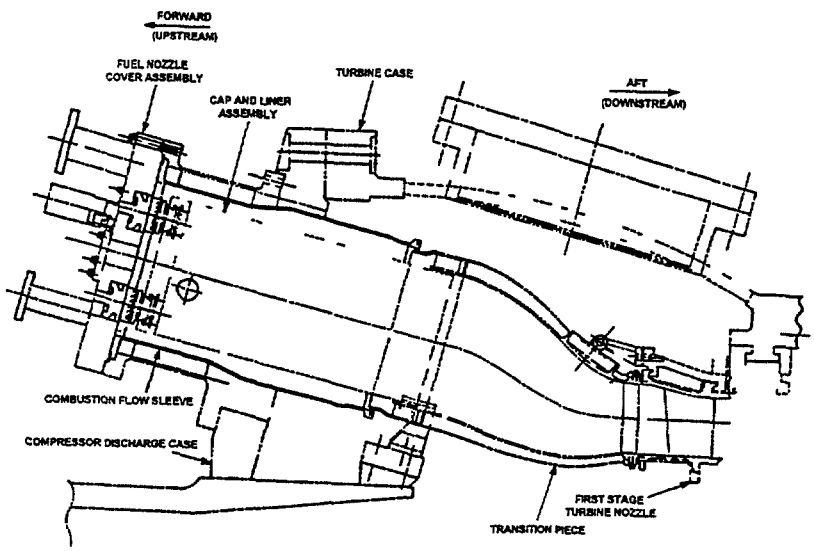

Figure 6-6 Combustion System Arrangement

551

A large number of gas turbines make use of water or steam injection in the combustion zone to minimize nitrogen oxide (NO_x) production If excessive amounts of water or steam are injected, it is possible to "flame out" "Flame out" refers to extinguishing the flame Additionally, excessive water or steam injection may cause dynamic pulsations in the combustion zone These pulsations can lead to early failure of hot gas components and increased maintenance costs The steam injected into the combustion zone has a higher heat transfer coefficient than the combustion gas

Therefore, hot section metal temperatures with steam injection are higher than without steam injection When steam injection is employed, alloys are used for the gas-side components to withstand the higher temperatures

Turbine

The turbine section of a gas turbine converts part of the thermal energy contained in the hot gas into mechanical energy Sufficient mechanical energy must be removed from the gas stream to supply the power necessary to drive the main compressor, the unit auxiliaries, provide for bearing frictional losses, and have enough excess power to drive a generator or some other type of main load apparatus

The hot gas from combustion is delivered to the turbine section from the combustion chambers The temperature and flow of the hot gas is determined by load The gas temperature may range from 1500°F to 2350°F, depending on the design While flowing through the turbine nozzles and buckets, the gas loses both heat and pressure Finally, the gas is discharged from the final stage at exhaust stack pressure and temperature While passing through the stages, the gas has given up enough energy to turn the turbine rotor to provide the necessary mechanical power

The exhaust gas is moving at a high axial speed when leaving the final turbine stage A diffuser passage is usually designed into the exhaust hood structure to slow the gas stream down to exhaust duct velocity Reducing the velocity of the exhaust gas has the same effect of reducing turbine back pressure Reducing gas velocity increases turbine pressure ratio and power

The primary factor that has contributed to increasing turbine output in the last two decades has been an increase in turbine inlet temperature (firing temperature) These higher temperatures are made possible by improved bucket and nozzle designs, better materials, and improvements in cooling techniques

The degree of cooling required for a turbine stage is a function of turbine nozzle and bucket metal temperatures These temperatures are determined by the energy recovered per stage in the turbine Turbines with high energy recovery per stage have less stages for the same output than turbines with lower energy recovery per stage Therefore in turbine designs with higher energy recovery per stage, the average turbine bucket temperatures run significantly cooler than turbines with lower energy recovery per stage Consequently high energy recovery per stage machines require less cooling air than low energy recovery per stage machines Conversely, if the same amount of cooling air is extracted in a high energy recovery per stage turbine as in a low energy recovery per stage turbine, the result is reduced turbine blade metal temperatures resulting in longer blade life **Figure 6-7** shows a typical cooling air flow diagram for a GE gas turbine

Internal cooling passages transport the gas from the compressor to the turbine nozzles, blades, and wheelspaces The nozzles and blades are cooled by air flowing through metering holes in these components The high pressure drop across the metering holes ensures efficient cooling of these components

To keep hot gas from leaving the main gas stream and flowing into the turbine disc spaces (wheelspaces), air is bled from the compressor and piped into the wheelspaces near the turbine shaft Air from the compressor is relatively cool air that flows outward across the wheel discs and into the gas stream The hot gas is prevented from entering the wheelspaces, and the wheels are cooled to safe operating temperatures

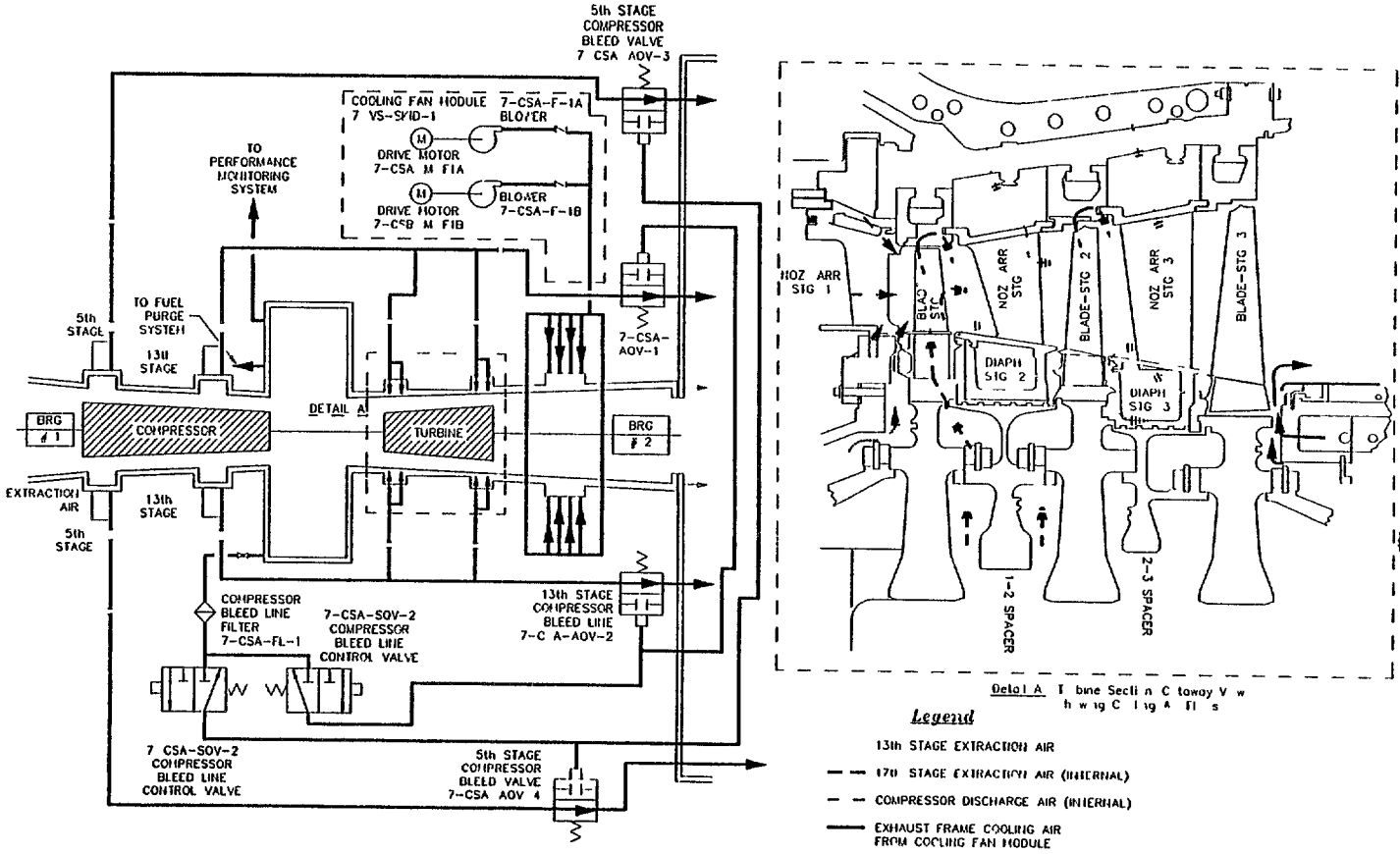

Figure 6-7 G E Gas Turbine Cooling Air Flow

560

Extraction air flow from the compressor for cooling can have a dramatic effect on the efficiency and power output of a gas turbine Greater extraction air flows reduce the mass of gas flowing through the turbine Since turbine developed power is directly proportional to mass flow, and turbine power is roughly three times shaft output power therefore, a one percent increase in extraction flow results in a 3 percent decrease in useful output Increased extraction flow will dilute the main gas stream flow The dilution of main gas stream flow lowers its temperature and energy level The result of a lower temperature and energy level is that final exhaust temperature is reduced

Turbine blades are designed to minimize vibration during operation, seal and insulate the turbine wheels from the hot gas, and withstand the corrosive nature of the hot gas These requirements are addressed by providing long blade shanks and seals for insulating the wheels, tip shrouds for vibration damping, and using high alloys and coatings for high temperature corrosion resistance

6 1 3 Classification of Gas Turbines

Gas turbines may be classified as either aeroderivative or heavy duty industrial machines The primary difference is in the design philosophy adopted for each of these machines A brief discussion on each type of gas turbine follows

Aeroderivative

As their name implies, aeroderivative gas turbine designs are based on aircraft propulsion gas turbines, **Figure 6-8** Aeroderivatives machines combine high temperature technology and high pressure ratios with advanced metallurgy to achieve high simple-cycle efficiencies Simple-cycle efficiencies up to 42% have been demonstrated in some newer designs

Aeroderivative gas turbines maintain as much commonality with the flight engine as possible for economy The result is a more effective approach to on-site maintenance, and preventive and corrective actions The actions include partial disassembly of the engine and replacement of components including blades, vanes and bearings

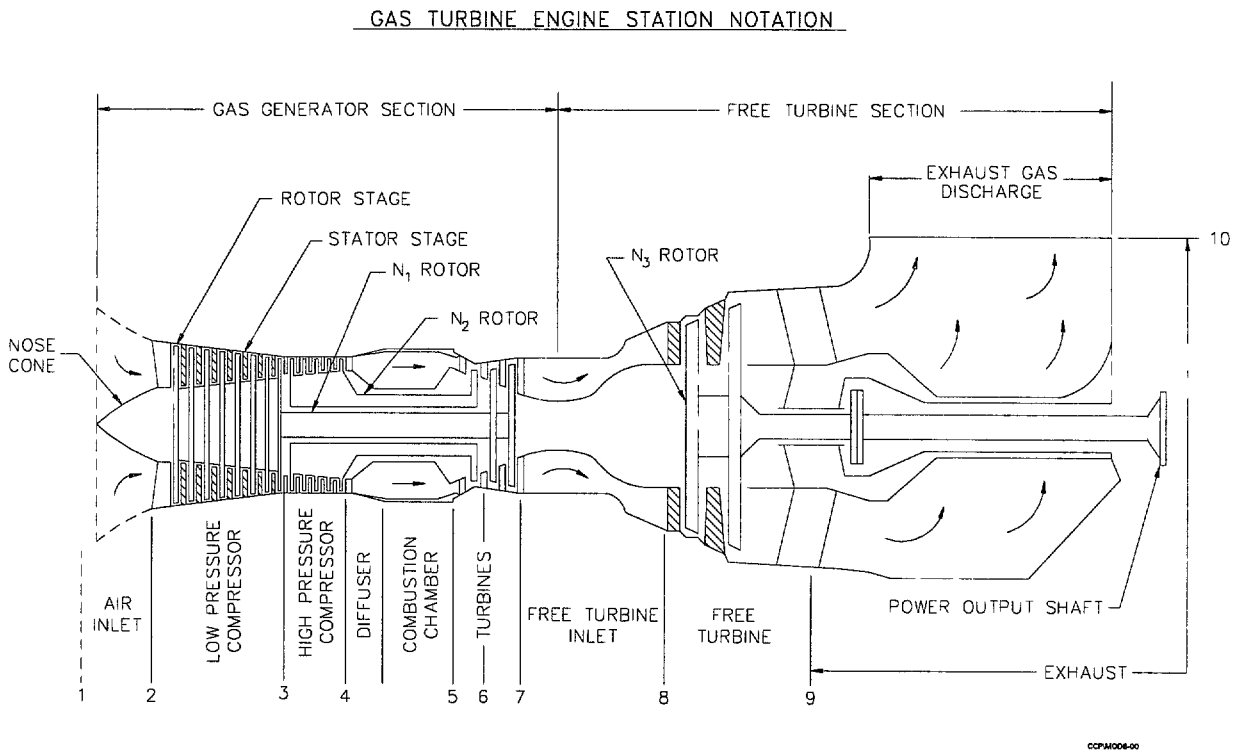

Figure 6-8 Aeroderivative Gas Turbines

The aeroderivative gas turbine evolves from the aircraft engine where reduced unit size and weight are extremely critical Rotor speeds (between 3,000 and 16,500 rpm) and casing pressures (20 to 30 atmospheres) for aeroderivative engines appear high when compared with other types of gas turbines However, the choice of the materials used in the aircraft engine offer high strength capabilities, and the resulting stress margins are equivalent to those of other types of gas turbines For example, the commonly used aircraft engine casing material, cast Inconel 718, has a yield strength of 104 ksi at 1200°F (649°C), while cast iron commonly used in other types of gas turbine casings has a yield strength of 40 ksi at 650°F

The aeroderivative design uses low weight rotors An example is the GE LM 5000 high pressure rotor that weighs 1,230 lbs (558 kg) Consequently, this rotor design uses roller bearings Roller bearings do not require large lubricating oil reservoirs, coolers, pumps, or a pre- and post-lubricating cycle Roller bearings are rugged and have demonstrated good characteristics in industrial service to where most bearings are expected to provide reliable service for over 100,000 hours In practice, bearing replacement is prudent when exposed during major repairs Generally, the bearing replacement should occur at 50,000 hours for gas generators and 100,000 hours for power turbines

The aeroderivative design's high efficiency makes it a good choice for simple cycle power generation The same is true for cyclic applications such as peaking power, which to some extent, parallels what an aircraft engine would see in flight operation With start times in the one-to-three-minute range, the aeroderivative is ideal for emergency power applications of any sort The inherent low rotor inertias and variety of air or gas pneumatic and hydraulic starting options available for aeroderivative gas turbines have simplified the black start capability of these machines "Black start" is the ability to bring a "cold iron" machine on-line when a source of outside electrical power is unavailable

Natural gas and distillate oil are the most frequently utilized fuels Gaseous fuels with heating values as low as 300 Btu/lb are suitable for the aeroderivative design Fuels such as gaseous propane and butane are equally suitable

Aeroderivative gas turbines however require more frequent maintenance in view of their higher compression ratios and firing temperatures Typically, complete hot sections of aeroderivative gas turbines or the gas turbines themselves are pulled out

and sent to a vendor's service facility for overhaul, and a spare section or turbine is installed in its place to increase availability

Aeroderivative gas turbines are also employed in the STIG (steam injected gas turbine) cycle The STIG cycle allows for significant amounts of steam injection at various points in the gas turbine for enhanced power output (up to 25% more than simple cycle output) and increased efficiency However, at the higher steam injection rates, carbon monoxide (CO) emissions tend to increase In simple cycle operation, aeroderivative gas turbines have a relatively low exhaust temperature The low exhaust temperature limits their application in an unfired combined cycle power plant

Heavy Duty Industrial

Heavy duty industrial gas turbines are characterized by their robust design and construction that allows for a long life at base load operating conditions, **Figure 6-9** These gas turbines are designed to operate in either simple cycle or combined cycle applications with a variety of liquid and gas fuels

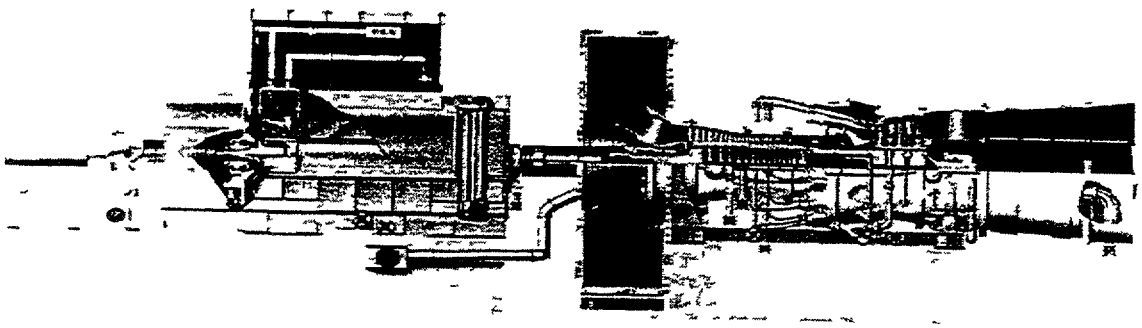

Figure 6-9 Heavy Duty Gas Turbine with a Hydrogen Cooled Generator

564

Heavy duty gas turbines are presently available in a range of sizes from a variety of manufacturers Unit outputs range from 20 MW to 226 MW in simple cycle operation Heavy duty gas turbines have been designed for high reliability and availability Higher reliability and availability are achieved by improving the component and system design, and by providing redundant components

Heavy duty industrial gas turbines have an advantage of relatively high simple cycle efficiencies (35% to 38%) with high exhaust temperatures High turbine exhaust temperature is ideal for combined cycle operations, thereby allowing overall efficiencies in excess of 55%, based on the lower heating value of the fuel

Recent developments in combustion systems for heavy duty industrial gas turbines have reduced NO_x emissions at the turbine exhausts These low emissions can be achieved without steam or water injection or downstream treatment systems

6 1 4 Unique Characteristics of Gas Turbines

Gas turbines inherently possess many attributes that make them suitable for certain types of power generation applications These include fast starting capability, high degree of automation, high reliability, high specific power output, and low environmental impact Each of these factors is discussed in more detail below

Fast Starting

An attractive feature of gas turbines is the short time required to start up from cold conditions and reach rated load operation Large, heavy duty industrial gas turbines are typically capable of starting and reaching rated load in under twenty minutes In turbines with fast starting and loading capabilities (typically used for black start or peaking applications), the time to reach rated load can be reduced to under fifteen minutes

In addition to being capable of fast starts, gas turbines are inherently suitable for multiple starts over short periods of time Gas turbines are therefore better suited than conventional steam plants for peaking and cycling service With the improvement in gas turbine efficiency, their role in base load power generation has also increased significantly over the last ten years

56

High Degree of Control and Automation/Minimal Monitoring

Present day gas turbines incorporate a high degree of automation and control/monitoring capabilities that make them quite simple to operate Gas turbine control systems are based on digital components and techniques that allow flexibility and high reliability The capabilities of the controls include automatic startup, synchronizing and loading to rated load, complete monitoring, and protection of the gas turbine from unsafe operating conditions

High control system reliability is achieved by redundant control sensors, controllers, and final control elements (i e , temperature and flow control valves etc) Continuous monitoring is provided on graphic computer screens and the operators interface with the gas turbine is through keyboards or other devices The computer based systems employ built-in diagnostics and troubleshooting routines that analyze and correct operation and control problems The use of redundant components allows on-line replacement of boards and sensors that are physically accessible during operation All of these features contribute to the increase in automation and minimize the need for operator interaction for normal turbine operation

High Degree of Reliability and Availability

As mentioned in a preceding section, the average heavy duty gas turbine availability has improved from 77% to 92% in the last twenty years Some designs achieve as high as 97% availability This improvement in availability has been the result of using advanced materials, advanced analytical techniques, increased emphasis on incremental technological changes, and stressing design changes necessary to correct field problems and improve reliability

In a recent effort to improve reliability of a new gas turbine package, a leading manufacturer set a reliability of 98% and a Mean Time Between Failures (MTBF) of 3000 hours as goals These goals were achieved by an analysis of the total systems and components with the objective of identifying problem components and systems Once these were identified, the goal of increasing reliability was achieved by either eliminating the component, redesigning in the component, or by providing redundant components

566

Reliability of a component/system also depends to a great extent on its maintainability The key to maintainability is accessibility, specially while the gas turbine is operating Accessibility is directly related to layout and congestion of plant components Congestion can be reduced, and accessibility improved, by using dedicated skids for separate systems Other examples of improvements in maintainability are

- use of electric motor drives as opposed to gas turbine shaft driven accessories
- adequate spacing between components to eliminate the need to remove other components for access to the affected component
- orienting components such as oil filters vertically to avoid oil leaks/spills while changing filter elements
- providing duplex filter elements for on-line changeover
- vertically orienting heat exchangers for bundle changeout with a straight pull with a crane

High Specific Power Output

Another advantage of gas turbines is their high specific power output Specific power output is defined as MW/pound of air flow/second The main factors that determine specific power output are compression ratio and turbine inlet temperature (firing temperature) The plant configuration (simple cycle versus combined cycle) also determines specific power output For example, a particular gas turbine may have a specific power output of 0 173 MW/lb/sec at a compression ratio of 16 in the simple cycle mode With the same compression ratio but in a combined cycle mode the specific power output would increase to 0 233 MW/lb/sec, an increase of approximately 35%

The gas turbine achieves a high specific power output due to its small size and weight of the components This is evident by comparing the relative sizes of gas turbine and steam turbine casings, rotors and valves for machines of comparable output

Low Environmental Impact

Gas turbines are significantly less threatening to the environment than other forms of power generation for several reasons including

- Smaller size for the same power generation from other fossil plants
- Reduced cooling water and makeup water requirement for the same power generation compared with other fossil units
- Reduced NO_x, CO or SO_2 emission for the same amount of power generation from other fossil plants
- Elimination of thermal, chemical and hazardous waste discharges due to zero discharge facility designs

These factors provide the environmental justification for building and operating gas turbine/combined cycle power plants

6 1 5 Advanced Gas Turbine Designs

As the demand for generating efficient electric power continues to grow, gas turbine manufacturers attempt to capture a greater portion of the market by development and application of more advanced gas turbines The justification for building more efficient machines is to not only exceed the performance of the conventional Rankine cycle plants, but to also overcome competition from other forms of power generation Another factor driving these efforts is competition between the different gas turbine manufacturers

There are several design characteristics that major manufacturers are adapting or including in their next generation of advanced gas turbines The most important characteristics are discussed below

Use of Aircraft Engine Technology

By adapting aircraft technology, industrial gas turbine manufacturers ensure a maximum return on their research and development investment is made by transporting the advanced concepts to power generation applications Heavy

568

duty industrial gas turbine designers are making increased use of the breakthroughs achieved by the aircraft industry in high temperature coatings and materials, blade and nozzle design and cooling techniques, manufacturing processes, and modularity in assembly and construction to increase the performance of industrial gas turbines These practices are expected to result in increased turbine firing temperature capability, improved compressor and turbine efficiency, and longer life of hot gas path components

Capability for Base Load Combined Cycle Operation with Emergency Fast Loading Capability

In a large number of applications, gas turbines may be used in combined cycle configurations but in a cycling mode This may involve as many as 200 starts per year, and the need to reach rated load in the shortest period of time This capability will be ensured by designing hot gas path components for not only long life but also for low cycle fatigue as occurs in a cycling operating mode Gas turbines and associated combined cycle system designs are currently evolving to support these requirements of system planners and operators

High Efficiency in Simple Cycle and Combined Cycle Modes of Operation

In order to be justifiable in an increasingly competitive marketplace, gas turbines will be required to have higher efficiencies as compared to other forms of power generation This is specially true since gas turbines presently use premium fuels (gas or distillate oil) which have an adverse effect on the economics of a power generation facility Gas turbines are also being developed to utilize cheaper fuels such as pulverized coal and low BTU gas competitively and efficiently to ensure their leadership in case the price of premium fuels escalates significantly

Enhanced Reliability and Low Maintenance Costs

As previously mentioned, reliability and maintainability are key considerations in the life cycle analysis for a gas turbine With improving maintainability and reliability, advanced gas turbines are increasingly becoming the choice of developers and owners as the prime movers for their electric generating needs

Flexibility to Accommodate Various Combustion System Application Requirements

In addition to the capability of burning liquid and natural gas fuels, advanced gas turbines are being designed to be integrated into coal gasification plants The degree of integration in future plants will continue to increase the overall efficiency

Examples of a high degree of integration between the gas turbine and coal gasification plant include

- Supplying air from the gas turbine compressor for the air separation plant
- Low temperature heat recovery from the gasifier for steam generation or water heating
- Use of syn gas sensible heat
- Residual coke combustion in a fluidized-bed gasifier

Low Emissions

Advanced gas turbines are being designed with the capability of reducing NO_x emissions into the single digit ppm range using staged combustion techniques These techniques do not require the injection of a diluent into the combustion zone or the use of a downstream catalyst to convert the NO_x present in the combustion gas In the future, manufacturers will supply gas turbines capable of operating with low emissions over a wider load range and using different types of fuels These capabilities are presently limited to natural gas and to operation between 50% and 100% of rated load

6 2 Gas Turbine Main Components

6 2 1 General Description

The design of gas turbines has successfully evolved to a point where they are prepackaged, self-contained systems capable of stand alone operation In the original configuration, a simple cycle combustion turbine is used to convert fuel to electrical power Liquid or gas fuel is supplied to the gas turbine through below grade piping A general plant arrangement of a simple cycle plant is shown in **Figure 6-10** A typical gas turbine assembly contains five major sections air inlet, compressor, combustion system, turbine, and exhaust These sections are described in detail later in this chapter In order to ensure safe and reliable operation under all operating conditions, several auxiliary and support systems are also provided with the gas turbine These systems are also described in detail in a later section The gas turbine described in this section has a can-annular combustion section

The flowpath through the gas turbine starts at the air inlet The air flows through the compressor combustion section, turbine, and finally to the turbine exhaust When the turbine starting system is actuated and the starting clutch is engaged, ambient air is drawn through the air inlet plenum assembly, filtered and compressed in the multi stage axial flow compressor During startup, for compressor pulsation (surge) protection, compressor bleed valves are opened and the variable inlet guide vanes are in the closed (partially open) position When the high speed relay actuates (at approximately 90% of turbine rated speed), the bleed valves begin operation automatically, and the variable inlet guide vane actuator energizes to position the inlet guide vanes for normal turbine operation Compressed air from the compressor discharge flows into the annular space surrounding the combustion chambers The air then flows from the chamber into the spaces between the outer combustion casings and the combustion liners The air enters the combustion zone through metering holes in each of the combustion liners

571

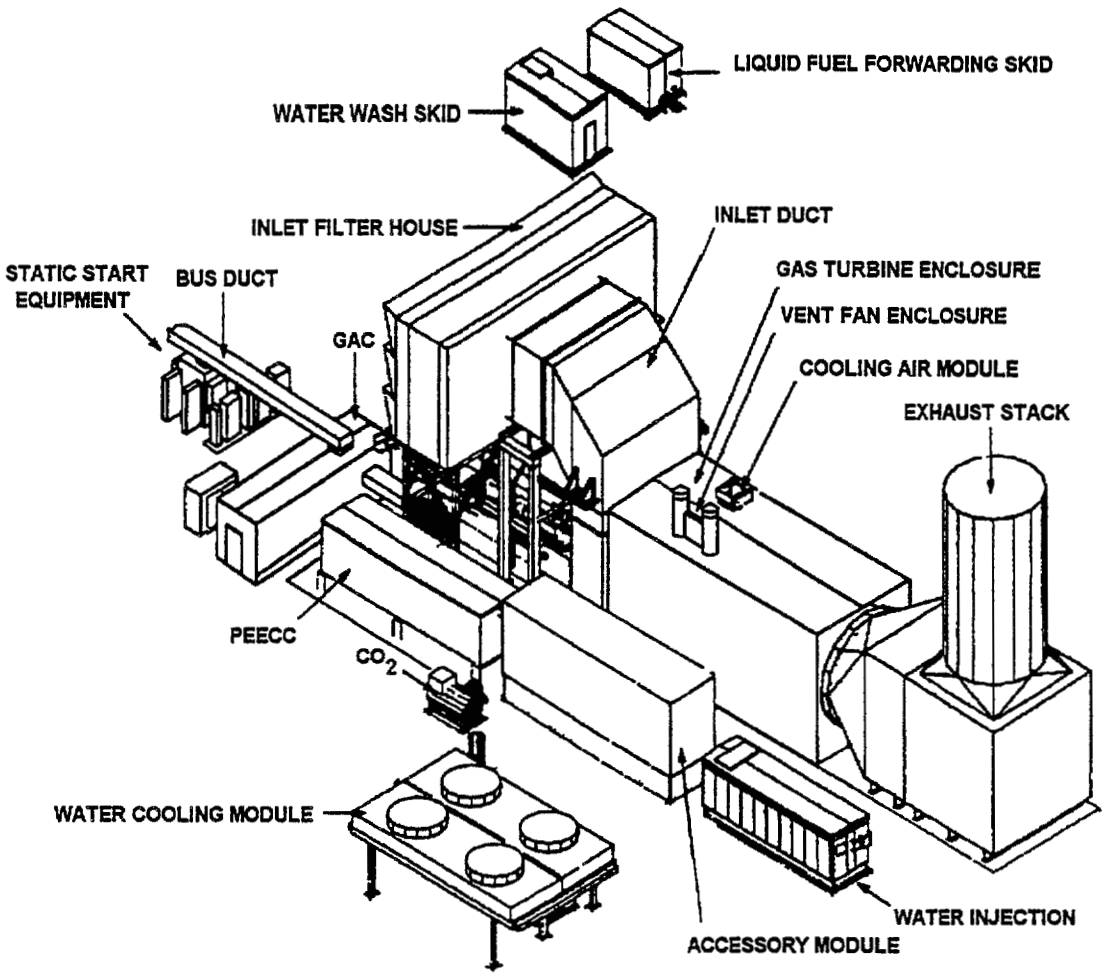

Figure 6-10 Typical Simple Cycle Gas Turbine Plant

572

Fuel is provided by flow lines, each terminating at the fuel nozzles in the end plates of separate combustion chambers Liquid fuel flow is controlled before being distributed to each nozzle to provide an equal flow into the nozzle flow lines On gas fueled machines, the fuel nozzles themselves are metering orifices that provide the proper fuel flow into the combustion chambers The nozzles introduce the fuel into the combustion chambers where it mixes with the combustion air and is ignited by spark plugs At the instant when fuel is ignited in a combustion chamber, flame is propagated through connecting cross-fire tubes to all other combustion chambers Combustion chamber pressure causes the spark plugs to retract removing the electrodes from the hot flame zone, as the speed of the turbine increases

The hot gases from the combustion chambers flow into separate transition pieces attached to the aft end of the combustion chamber liners The combustion gases then flow into the three stage turbine section Each stage consists of a row of fixed nozzles and a row of turbine blades In each nozzle row, the kinetic energy of the jet is increased, with an associated pressure drop The pressure drop is absorbed as useful work by the turbine blades, resulting in shaft rotation The shaft rotation is used to turn the generator rotor to generate electrical power After passing through the third stage buckets, the gases are directed into the exhaust diffuser The gases pass into the exhaust plenum and are introduced to the HRSG through the connecting ductwork, or discharged to atmosphere if the turbine is used in a simple cycle arrangement

6 2 2 Air Inlet Equipment

Gas turbines are sensitive to inlet air quality because of the inherent design and the enormous amount of air consumed Filtration is necessary to provide protection against the effects of contaminated air that may degrade gas turbine performance and life through erosion, corrosion, fouling, and plugging of the cooling passages (**Figure 6-11**) As gas turbine technology advances and firing temperatures are increased, the need for effective and reliable filtration has become even greater A thrust toward high-efficiency filtration during the early 1970's was met with concern over life of the filter media, maintenance requirements, rapid plugging in dusty environments, etc Air filters currently provide high efficiency filtration coupled with long design lives (20,000 hours) before requiring replacement

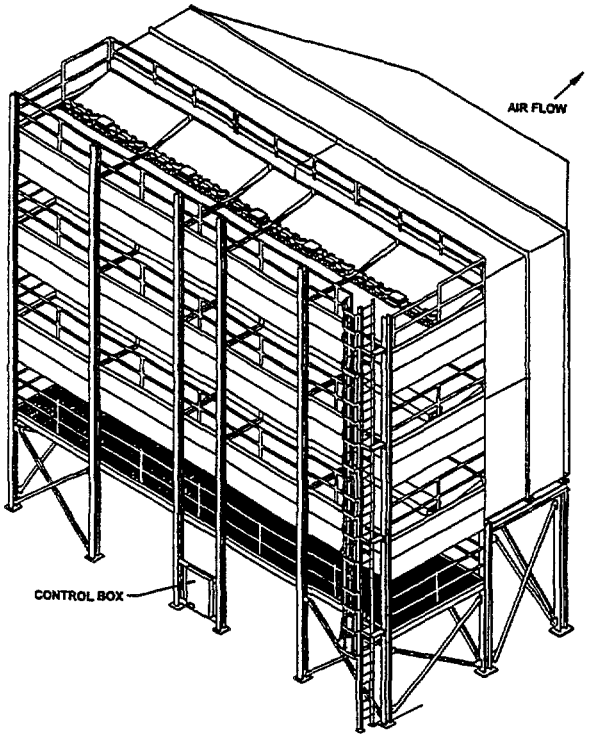

Figure 6-11 Gas Turbine Inlet Air Filter

The inlet filter compartments that are now typically supplied by turbine manufacturers can be separated into two generic types self-cleaning and multi-stage Conventional compartments typically use self-cleaning filter systems with treated paper media Special features are included which allow these high-efficiency filters to be cleaned of accumulated dust by momentarily directing a backward flow of air through the filter (**Figure 6-12**) The high-pressure-pulse cleaning air can be derived from the gas turbine compressor to improve the reliability over a separate compressor

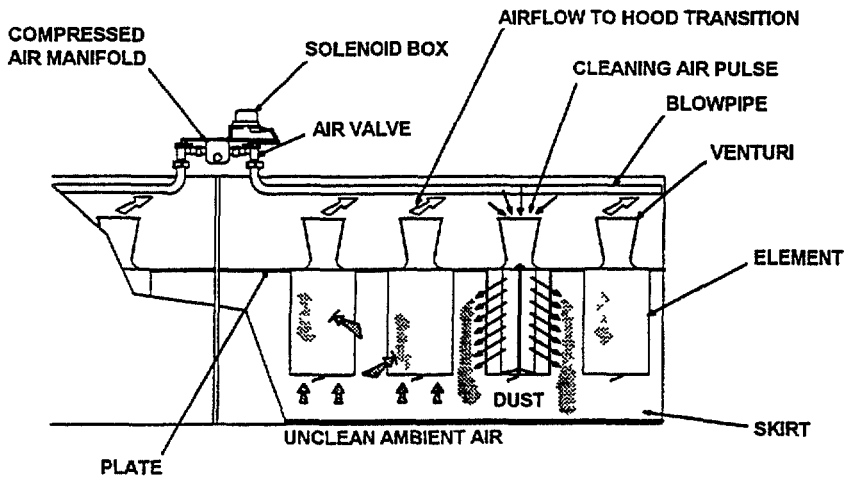

Figure 6-12 Self-Cleaning Filter Action

This reverse flow dislodges the dust which then falls from the filter Only a few of the many filter elements are cleaned at any given time, so that air flow to the operating gas turbine is essentially undisturbed Pulsing of the filters is normally initiated when the inlet filter pressure drop reaches 3 inches (75 mm) of water The ability to clean the filters while the unit is running has eliminated the need for an implosion door, thus removing a significant potential leakage path which could allow ingestion of dust laden ambient air to flow directly to the gas turbine Self-cleaning compartments are designed to initiate alarms for either of two conditions low pressure in the pulse air supply or excessive suction (inlet filter pressure drop) in the clean air plenum These alarms indicate the need for timely corrective action Typically, if the pressure drop reaches a design value (normally around eight inches of water), a controlled shutdown is initiated A large percentage of gas turbines during the past few years have incorporated self-cleaning inlet filter compartments

Recent developments in a "down flow" design concept have further improved the effectiveness of self-cleaning air filters This design introduces the incoming air "down over" the horizontally-mounted cartridges, thus working with gravity to carry off the "pulsed dirt "

575

6 2 3 Compressor

The function of the gas turbine compressor is to efficiently compress the required mass of air and deliver the air to the combustion section at design pressure Typical compression ratios range from 10 1 to 15 1 for heavy duty industrial gas turbines and higher for aeroderivative gas turbines The mass flow of air handled by a typical industrial gas turbine compressor ranges from 115 pounds per second to 1,400 pounds per second (415,000 to 4,900,000 pounds per hour)

There are two kinds of compressors used on gas turbine engines They are the centrifugal and the axial flow By the end of World War II, the gas turbine engine breakthrough has been made in aircraft propulsion The British had developed the Whittle engine which used a centrifugal compressor At the same time, the Germans had developed an engine utilizing an axial flow compressor Since that time, the science of aerodynamics has developed to the point that the efficiency of axial flow compressors generally exceed that of centrifugal As a result, a much greater number of gas turbine engines currently employ axial flow compressors

Aside from efficiency considerations, size and durability can be important factors in compressor suitability The axial flow compressor is smaller in diameter and longer for a given output, while the centrifugal compressor is larger in diameter and shorter The more streamlined shape of the axial compressor is better suited for aircraft purposes On the other hand, the centrifugal compressor is a much more rugged unit under unfavorable operating conditions Large aircraft and aircraft derivative engines almost exclusively utilize axial flow compressors for efficiency and size reasons For more rugged operation, the centrifugal compressor can be found on some industrial models

<u>The Centrifugal Compressor</u>

The centrifugal compressor consists of an impeller enclosed in a casing which contains the diffuser Air is drawn into the rapidly rotating impeller at the center, or hub It is then discharged at higher pressure and increased velocity into the stationary diffuser There the air decelerates and this kinetic energy (energy due to velocity) provides an additional pressure rise The pressure rise through centrifugal impellers is great enough that more than two stages are seldom used on gas turbine engines

The centrifugal impeller may be single- or double-entry The double-entry compressor simply increases flow capability necessary for some applications

The Axial Flow Compressor

The axial flow compressor is so named because the air flows parallel to the rotor axis During compression, the air passes through a series of stages Each stage consists of a row of moving blades attached to the rotor followed by a row of stationary blades attached to the casing In contrast to the centrifugal compressor, as many as 15 stages may be necessary to achieve the desired operating pressure in an axial flow compressor As in the centrifugal compressor, part of the kinetic energy imparted to the air by the moving blades is recovered as a pressure rise through the stationary blades The stator also serves to direct the flow into the next rotor stage at an optimum angle The air passage becomes narrower through the compressor This is necessary to maintain velocity as the air becomes denser (compressed)

The typical axial flow compressor section consists of the compressor rotor and the compressor casing Generally, within the compressor casing at least one row of variable inlet guide vanes is provided, plus a number of stages of rotor and stator blading, and the exit guide vanes, **Figure 6-13**

In the compressor, air is confined in the space between the rotor and stator where it is compressed in stages by a series of alternate rotating (rotor) and stationary (stator) airfoil shaped blades The clearance between the tip of the compressor blades and the inside of the casing influences the performance of the compressor The rotor blades provide the force needed to compress the air in each stage and the stator blades guide the air so that the air enters the following rotor stage at the proper angle The compressed air exits through the compressor discharge casing to the combustion chambers Air is extracted from the compressor for turbine cooling, bearing sealing, and for pulsation control during startup

577

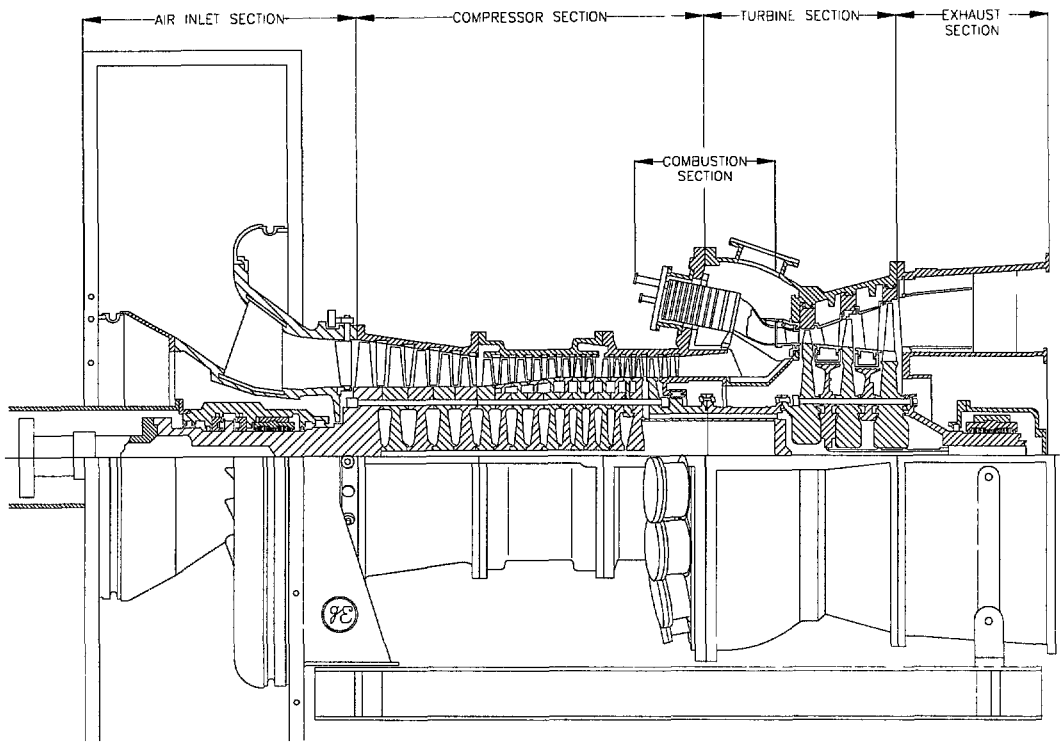

Figure 6-13 Gas Turbine Compressor

In a typical heavy duty gas turbine, the casing area of the compressor section is composed of the following

- Inlet Casing
- Compressor Casing
- Compressor Discharge Casing

These casings, together with the turbine shell, form the main structure of the gas turbine They support the rotor at the bearing points and constitute the outer wall of the gas-path annulus All of these casings are split horizontally to facilitate servicing

575

The following compressor description pertains to an 18 stage axial flow compressor used in the GE 7001 F gas turbine Provisions for extracting air are made in stages 5 and 13 The compressor inlet casing is located at the forward end of the gas turbine The casing directs the air uniformly into the air compressor, and supports the No 1 (compressor inlet end) bearing Variable inlet guide vanes are located at the aft end of the inlet casing and are mechanically positioned, by a control ring and pinion gear arrangement connected to a hydraulic actuator drive and linkage arm assembly The position of these vanes has an effect on the quantity of compressor inlet air flow, and is controlled by the gas turbine control system

The compressor inlet bell mouth is positioned on to the outer bellmouth by nine air-foil shaped radial struts These struts are cast into the bellmouth walls The struts also transfer the structural loads from the adjoining casing to the forward support, which is bolted and doweled to the inlet casing

The compressor casing consists of a forward and an aft section The forward casing consists of the stator components for stages 0 (first stage) through 4 The casing is equipped with two integrally cast trunnions, used for lifting the gas turbine when separated from the base The aft compressor casing contains the stator components for stages 5 through 12 Extraction points penetrate the aft compressor casing to extract air for cooling and sealing, and for use in controlling compressor pulsation during gas turbine startup and shutdown

The compressor discharge casing contains the stator components for stages 13 through 17 In addition to housing the final compressor stages, the discharge casing forms both the inner and outer walls of the compressor diffuser, and joins the compressor and turbine casings The discharge casing also provides support for the combustion chambers

The discharge casing consists of two cylinders The outer cylinder is a continuation of the aft compressor casing The inner cylinder surrounds the compressor rotor The two cylinders are concentrically positioned by fourteen radial struts The tapered annulus between the cylinders forms the compressor diffuser The compressor diffuser converts some of the air's velocity energy into pressure energy for use as combustion air

The compressor rotor and stator blades are airfoil shaped and designed to compress the air efficiently at high blade tip velocities The blades are attached to the compressor by a dovetail arrangement The dovetail arrangement maintains each blade in the desired location on the wheel The length of the turbine-compressor rotor requires only two bearings for support The shorter length rotor has eliminated the need for a third bearing at mid-span, which was a source of oil leaks and fires in earlier gas turbine designs

Surge control of the compressor is accomplished through variable inlet guide vanes (VIGV) and selective bleed at the 13th stage When the unit is started, the VIGVs are at their minimum setting The vanes are opened by the turbine control system based on turbine speed as the unit accelerates At 100 percent speed, the VIGVs are fully open for simple-cycle operation, for combined cycle applications, the VIGVs are at an intermediate position and open as a function of load and exhaust temperature to maintain maximum combined cycle thermal efficiency The 13th stage bleed valves are open when the gas turbine is shutdown During startup, the 13th stage bleed valves remain open up to 90% rated speed to provide pulsation (surge) protection At 90% rated speed, the 13th stage bleed valves are closed by the gas turbine control system

Higher-strength alloys are being increasingly applied in order to accommodate the increased compressor blade stresses Custom 450 (a high chromium stainless steel) has been selected for the VIGVs and initial stages in this compressor design The stainless steel alloy has superior corrosion resistance and can be applied without coatings in a variety of corrosive environments A higher-strength version of AISI 403, another stainless steel with Columbium addition is the alloy of choice for the later stages of the compressor and exit guide vanes The net result of the application of these higher-strength alloys is that the applied stress/yield strength ratio remains low

6 2 4 Combustion Section

The combustion section is the area where the fuel is injected in the air discharged by the compressor, and high temperature gas is produced Several important considerations go into the design of combustion systems for gas turbine engines Except in some special applications, the room available for the burner (combustor) is relatively small and the temperature distribution of the gases leaving the burner must be as uniform as possible (to provide good performance and to prevent

localized overheating problems) Also, combustion must be continuous and stable This can be a difficult requirement since the air velocity entering the burner is often on the order of 100 - 200 ft/sec (68 - 136 mile/hr or 30 - 60 meters/sec) If the combustion process is not efficient, carbon particles can form These particles can wear away or erode turbine blades, decreasing their useful life and reducing engine efficiency Other problems concerning the pressure, temperature, metal fatigue, and stresses can be important Even the routing of the air to the burner is more complex than one would expect Various arrangements of the combustion section are used by different manufacturers Among the common arrangements are

- Annular combustion system
- Silo type combustion system
- Can-Annular combustion system

The first arrangement (annular combustion system) is common on aeroderivative gas turbine applications, while the second and third arrangements are commonly used in heavy duty industrial applications Each of the various arrangements has advantages claimed by their manufacturers A brief overview of the first two arrangements is given below, while the third type is covered in more detail

Annular Combustion System

This type of combustion chamber is limited to aircraft engines and aeroderivative gas turbines The annular combustion chamber features a uniform exhaust temperature profile and uniform gas distribution The combustion chamber has several replaceable fuel nozzles located circumferentially around the combustion chamber Thermal barrier coatings are typically applied to the inside of the combustion chamber for high temperature resistance This type of combustion system entails replacing the complete combustion chamber and fuel nozzles during the combustion inspection

Silo Type Combustion System

A silo type combustion arrangement is shown in **Figures 6-14, and 6-15** The silo type combustion system has inherent advantages in terms of low NO_x generation with hybrid burners This combustion arrangement also has a higher combustion efficiency due to the large volume of the combustion chamber Additionally, maintenance and inspection of the combustion chamber is relatively simple in view of its large size and accessibility of the components

581

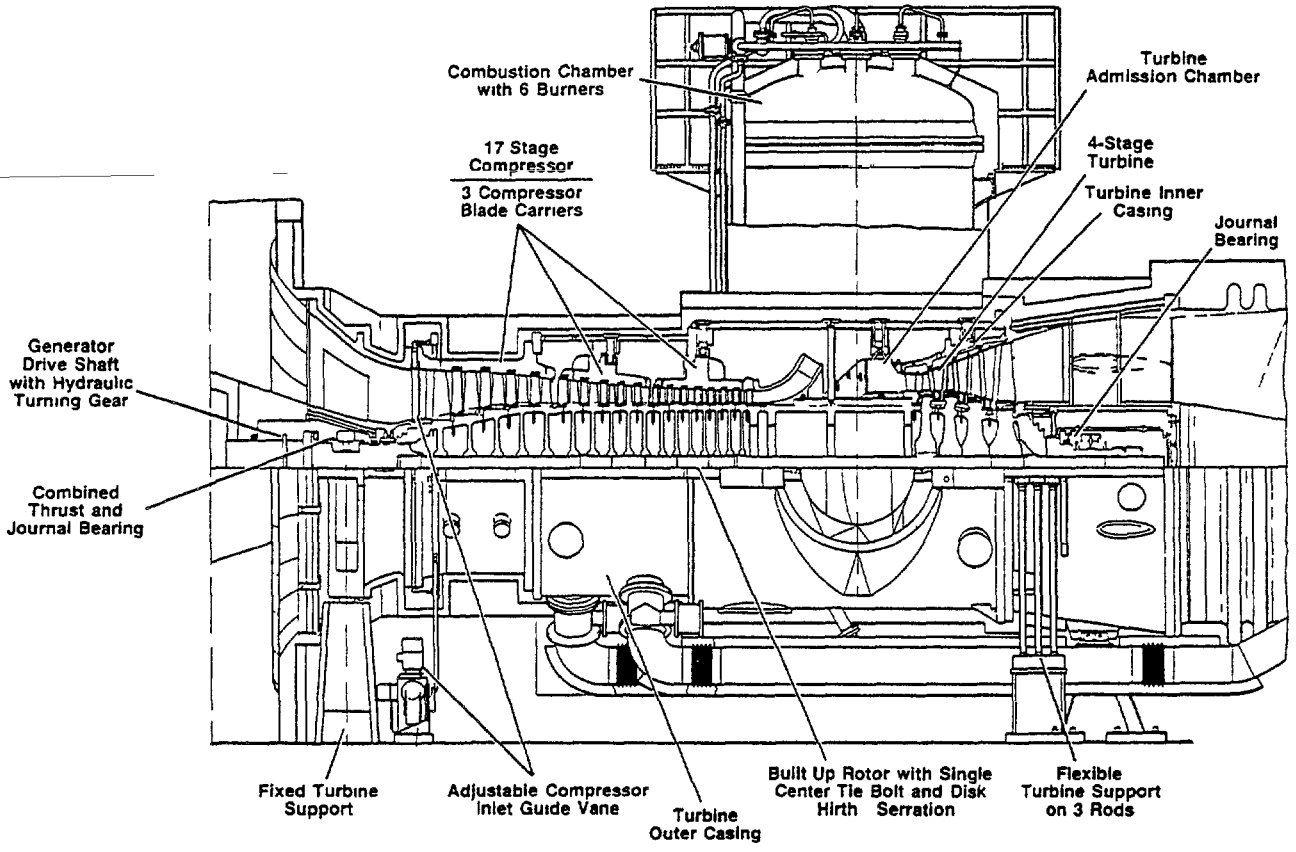

Figure 6-14 Gas Turbine with Silo Type Combustion Chamber

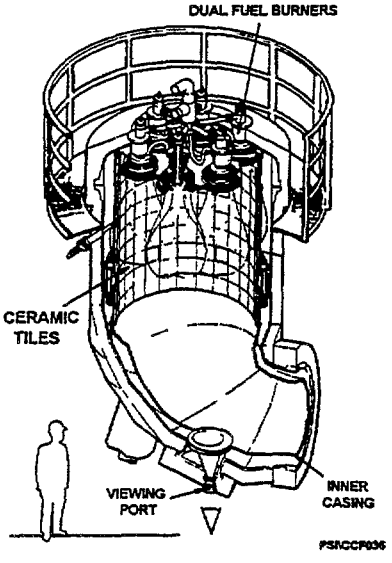

Figure 6-15 Silo Type Combustion Chamber

Each silo type combustion chamber is provided with multiple hybrid burners for combustion efficiency and low NO_x generation Hybrid type burners have recently been introduced to provide low NO_x operation over a wide range of loads from approximately 50% load up to 100% rated load

The silo type combustion chamber consists of two concentric cylinders Combustion occurs inside the inner chamber which is lined with ceramic tiles Compressor discharge air flows in the annular space between the two cylinders

Advantages claimed for the hybrid burner design are

- Pre-mix burning of natural gas without water injection for NO_x control
- Pre-mix burning of natural gas with water injection for power augmentation
- Diffusion burning of fuel oil at low loads with water injection for NO_x control
- Diffusion burning of natural gas at low loads with water injection for NO_x control
- Mixed fuel operation with a minimum of 20% natural gas (diffusion burning mode) with water injection for NO_x reduction
- Mixed fuel operation with a minimum of 20% fuel oil (diffusion burning mode) with water injection for NO_x reduction
- Switch-over between premix and diffusion burning of natural gas and fuel oil

Inspection of this type of combustion chamber is made simple by the fact that a bolted, hinged manhole cover is provided for access into the combustion chambers The large dimensions of the combustion chambers facilitate entry into the combustion chambers and movement inside Replacement of ceramic tiles can also be accomplished easily once the chamber has been entered into

Can Annular Combustion System

The can annular combustion system is used by several of the heavy duty, industrial gas turbine manufacturers A can annular combustion section is shown in **Figure 6-16** This combustion system is the reverse flow type with the combustion chambers arranged around the periphery of the compressor discharge casing Combustion chambers are numbered counterclockwise when viewed looking aft, starting from the top of the machine The can annular system also includes the fuel nozzles, a spark plug ignition system, flame detectors, and crossfire tubes

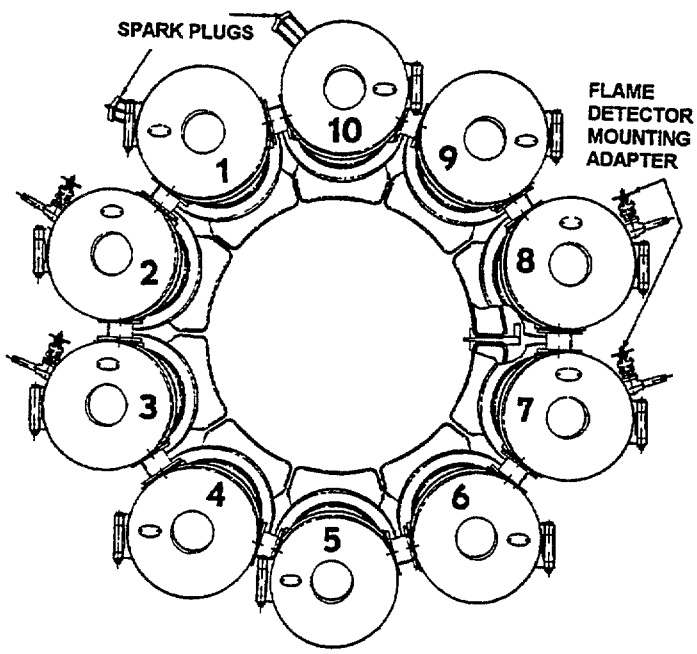

Figure 6-16 Cam Annular Combustion Arrangement

High pressure air from the compressor discharge is directed around the transition pieces and into the annular spaces that surround each of the combustion chamber liners The combustion wrapper forms a plenum through which the compressor discharge air flow is directed to the combustion chambers The combustion air enters the combustion zone through metering holes for fuel combustion and through openings in the combustion liner for cooling

584

The secondary purpose of the combustion wrapper is to act as a support for the combustion chamber assemblies In turn, the combustion wrapper is supported by the compressor discharge casing and the turbine shell Fuel is supplied to each combustion chamber through a nozzle assembly designed to disperse and mix the fuel with the proper amount of combustion air

Advantages of using the can-annular arrangement are

- Arrangement permits the entire turbine to be factory assembled, tested, and shipped without interim disassembly
- Improved control of the turbine inlet temperature profile This improved control provides for longer turbine life without reducing cooling air flow requirements
- Smaller parts can be handled more easily during maintenance
- Smaller transition pieces are less susceptible to damage from dynamic forces generated in the combustor
- Smaller combustors generate less NO_x because of better mixing and shorter residence time
- Can type combustors due to their smaller size can be fully tested in the laboratory before being installed in the field

The following section describes the major components of a can annular combustor system

Combustion Chambers

Air discharged from the axial flow compressor flows into each combustion chamber, upstream The air enters the combustion chamber reaction zone through the fuel nozzle swirl tip and through metering holes in both the cap and combustor chamber liner The hot combustion gases from the reaction zone pass into a dilution zone where additional air is mixed with the combustion gases Metering holes in the dilution zone allow the correct amount of air to enter and cool the gases to the desired temperature Openings along the length of the combustion liner and the liner cap provide a film of air for cooling Transition pieces direct the hot gases from the liners to the turbine nozzles

585

Fuel Nozzles

Each combustion chamber may be equipped with a single or multiple fuel nozzles that emit a metered quantity of gas/liquid fuel Gaseous fuel is admitted through metering holes in the nozzle tip The action of the swirl tip imparts a swirl to the combustion air resulting in more complete combustion A typical dual fuel nozzle is shown in **Figure 6-17**

The combustion liners, **Figure 6-18**, use a conventional slot-cooled construction Thermal barrier coating is applied to the internal surfaces to reduce the overall temperature and thermal gradients in the liner The liner cap is cooled with a combination of back side impingement and film cooling

Combustion is initiated by two retractable electrode spark plugs At the time of firing, a spark in one or both of these plugs ignites the fuel/air mixture in the chamber The remaining chambers are ignited by crossfire through the tubes that interconnect the reaction zones As rotor speed and compressor air flow increase, rising chamber pressure causes the spark plugs to retract, and remove the electrodes from the combustion zone

During the starting sequence, it is essential that an indication of the presence or absence of flame be transmitted to the control system For this purpose, a flame monitoring system is used consisting of multiple ultra violet flame sensors installed on adjacent combustion chambers and an electronic amplifier mounted in the control panel The ultraviolet flame sensor, **Figure 6-19**, contains a gas filled detector The gas within this detector is sensitive to the presence of ultraviolet radiation which is emitted by a hydrocarbon flame A DC voltage, supplied by the amplifier, is impressed across the detector terminals If flame is present, the ionization of the gas in the detector allows conduction in the circuit which activates the electronics to give an output indicating flame Conversely, the absence of flame will generate an output indicating no flame

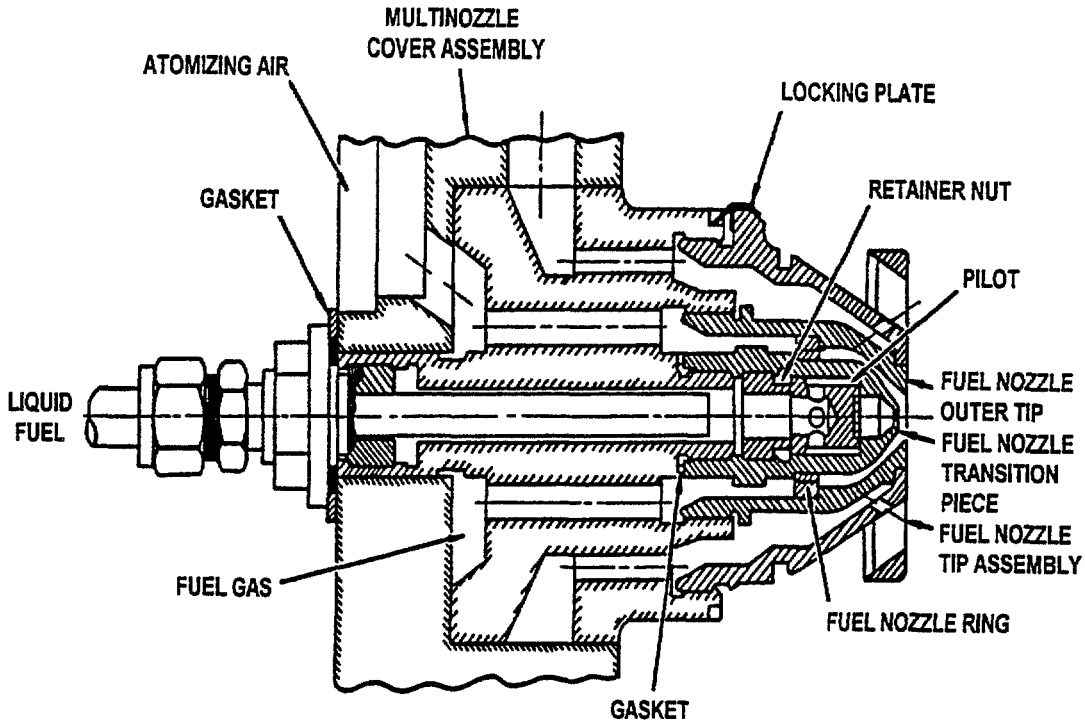

Figure 6-17 Dual Fuel Nozzle

581

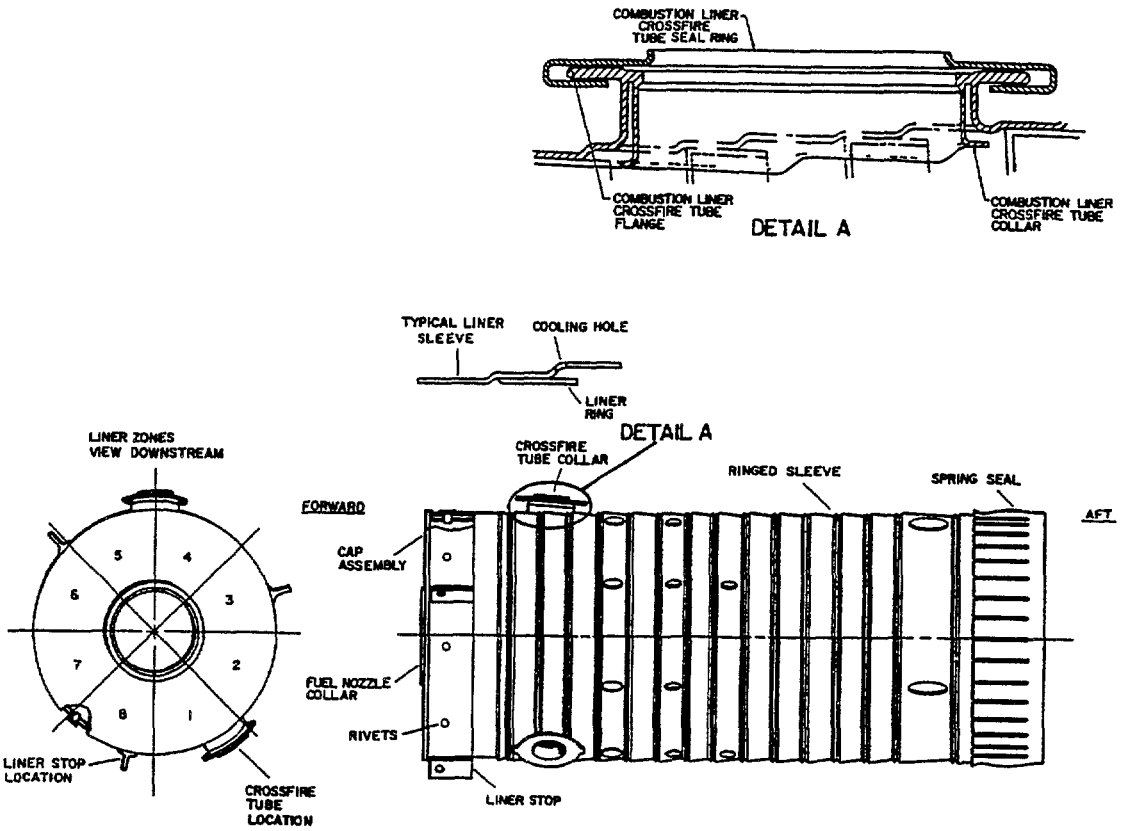

Figure 6-18 Combustion Liner

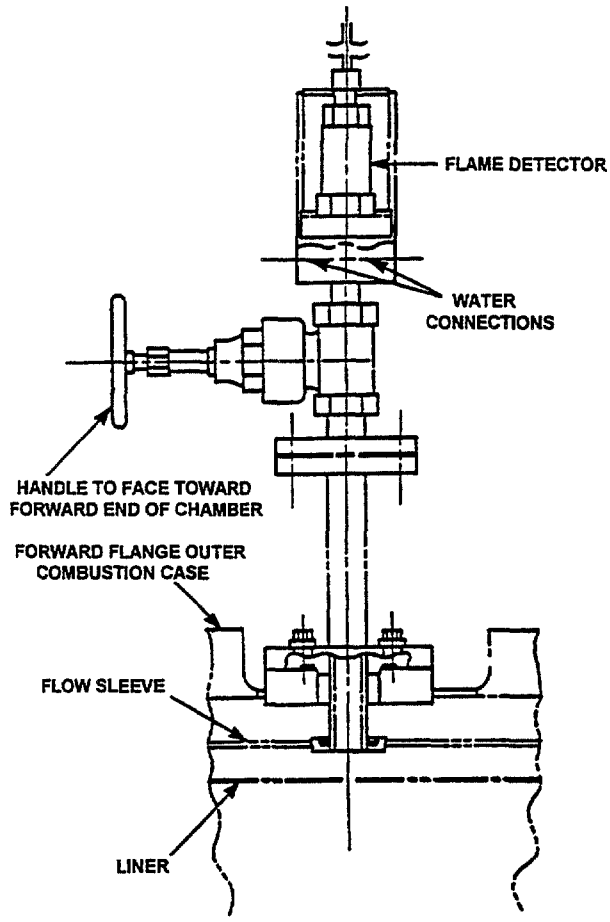

Figure 6-19 Flame Sensor

6 2 5 Turbine Section

The turbine is the area in which energy in the high pressure, high temperature gas produced by the compressor and combustion sections is converted to mechanical energy Major gas turbine manufacturers produce turbines having multiple stages, ranging from two to five or more The number of stages determines the energy recovered per stage and consequently the temperature drop per stage More energy recovery per stage and temperature drop per stage occur as the number of stages is reduced As a result, the average turbine blade metal temperature is significantly lower for a gas turbine with few stages than those having a greater number of stages One of the widely used gas turbines, the MS-7001 F gas turbine produced by GE is covered in detail in this section The turbine hardware includes the turbine rotor, turbine casing, exhaust frame, exhaust diffuser, nozzles and shrouds

589

Turbine Rotor and Cooling

The MS7001F rotor is of bolted disk and shaft construction and consists of two major groups the compressor and the turbine The compressor rotor has been described in a previous section A description of the turbine section of the rotor follows

The MS7001F turbine is a three-stage design with the first-stage bucket unshrouded and the second- and third-stage buckets equipped with integral Z-form tip shrouds This newly designed turbine is two percent higher in efficiency than its predecessor, the MS7001E turbine Unlike the 7F compressor, the MS7001F turbine represents a totally new aerodynamic design with zero exit swirl at full load and a moderate exit velocity

The turbine buckets are assembled in the wheels with fir-tree shaped dovetails The dovetails fit into matching cutouts in the turbine wheel rims All three turbine stages have precision cast, long shank buckets The long shank bucket design effectively shields the wheel rims and bucket root fastenings from the high temperatures in the hot gas path while providing mechanical damping of blade vibration

To aid in vibration damping, the second and third stage buckets have interlocking shrouds at the bucket tips These shrouds increase turbine efficiency by minimizing tip leakage Radial edges on the bucket shrouds combine with stepped surfaces on the stator to provide a labyrinth seal against leakage past blade tips The construction of the rotor provides rabbetted fits between each component to ensure precise and permanent alignment

Each of the three rotor stages consist of 92 investment cast buckets as shown in **Figure 6-20** The first and second stage nozzles are constructed of 24 two-vane, investment-cast segments, and the third-stage nozzle of 20 three-vane, investment-cast segments The first- and second-stage buckets and all three nozzle stages are air cooled The first-stage bucket is convectively cooled through serpentine passages with turbulence promoters as shown in **Figure 6-21** Cooling air leaves the bucket through holes in the bucket tip and along the trailing edge

590

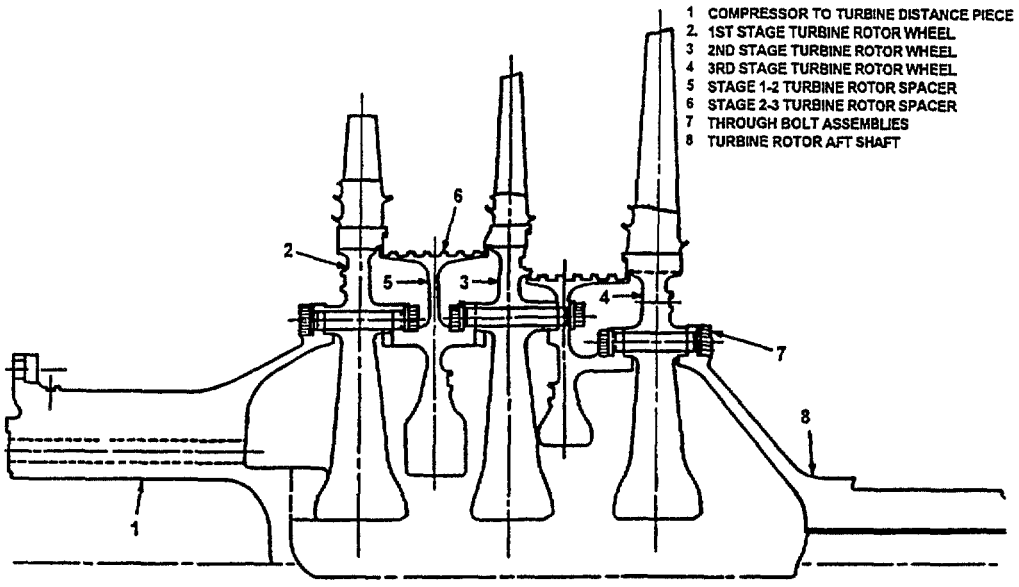

Figure 6-20 Turbine Rotor

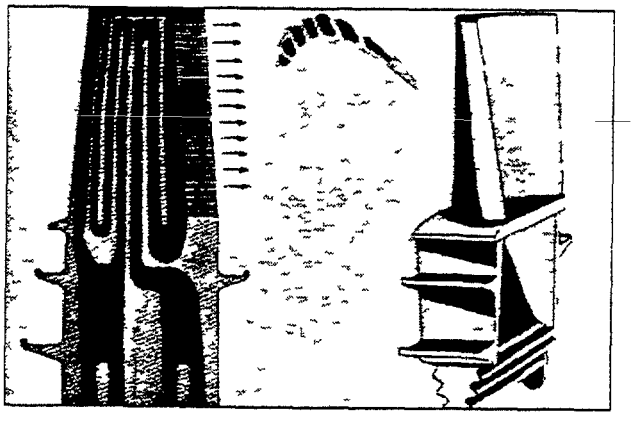

Figure 6-21 First Stage Bucket Cooling Passages

The second-stage bucket is cooled by convective heat transfer through drilled radial holes The cooling air exits through the bucket tip The first-stage nozzle contains a forward and aft cavity in the vane These cavities cool the vane and sidewall region by a combination of film, impingement, and convection techniques The second-stage nozzle is cooled by a combination of impingement and convection techniques The third-stage nozzle is cooled by convection The efficient use of cooling air is further enhanced by the reduced vane surface area of the first stage nozzle The reduced surface area is a result of their hollow construction

The buckets of all three stages are designed with long shanks and integral cover plates These shanks provide isolation of the gas path from the wheel rim and for mechanical damping of the bucket stem Mechanical damping is accomplished using seal/damping pins located under the platform, and in the cover plate edges

The first- and second-stage stationary shrouds are two piece designs The inner gas-side shroud is separated from the supporting outer shroud to allow for expansion and contraction This two piece design improves low cycle fatigue (LCF) life The first-stage shroud is cooled by impingement, film, and convective means

Turbine rotor cooling is accomplished by a positive flow of compressor extraction air, discharged radially outward through the space between the turbine wheels and stators (wheelspaces), into the main gas stream As shown in **Figure 6-21**, the first-stage forward wheelspace is cooled by compressor discharge air through a labyrinth seal The labyrinth seal is located between the compressor rotor and inner cylinder of the compressor discharge casing The cooling air flow is discharged into the main gas stream aft of the first-stage nozzle The first-stage aft wheelspace is cooled by 13th stage extraction air, ported through the 2nd stage nozzle The cooling air is returned to the gas path forward of the 2nd stage nozzle

The second-stage forward wheelspace is cooled by leakage from the first-stage aft wheelspace, through an interstage labyrinth The cooling air returned to the gas path at the entrance of the second-stage buckets The second-stage aft wheelspace is cooled by 13th stage extraction air, ported through the 3rd stage nozzle The cooling air from this wheelspace is returned to the gas path at the third-stage nozzle entrance

592

The third-stage forward wheelspace is cooled by leakage from the second stage aft wheelspace, through an interstage labyrinth The cooling air is returned to the gas path at the third-stage bucket entrance The third-stage aft wheelspace is supplied with cooling air from the discharge of the exhaust frame cooling air annulus The cooling air flows through the third-stage aft wheelspace and into the gas path at the entrance to the exhaust diffuser

Stator

The MS7001F stator is of combined cast and fabricated construction The inlet is grey cast iron, and the compressor casings are of ferritic nodular cast iron while the compressor discharge casing, turbine shell, exhaust frame, and combustion outer casings are fabricated of SA516 carbon steel

The three stages of stationary nozzles direct the high-velocity flow of hot combustion gas against the turbine buckets, causing the turbine rotor to rotate Because of the high pressure drop across these nozzles, seals are located at both the inside and the outside diameters to prevent leakage

First-Stage Nozzle

The first-stage nozzle receives hot combustion gases from the combustion section through transition pieces The nozzle segments, each with two partitions or air-foils, are contained by a horizontally split retaining ring The retaining ring is supported at the horizontal centerline with lugs The retaining ring is guided by pins at the vertical centerline This support arrangement permits radial thermal growth of the retaining ring while keeping the ring centered in the casing

Second Stage Nozzle

Combustion air exiting the first stage buckets is again expanded and redirected against the second stage buckets by the second-stage nozzle The second stage nozzle is made of cast segments, each with two partitions or airfoils The nozzle segments are held in a circumferential position by radial pins from the shell into axial slots in the nozzle outer sidewall

Third-Stage Nozzle

The third-stage nozzle receives the hot gas as the gas leaves the second stage buckets The nozzle increases the gas velocity, and directs the gas flow against the third-stage buckets The nozzle consists of cast segments, each with three partitions or airfoils The nozzle segments are held at the outer sidewall forward and aft sides in grooves The third stage nozzle is positioned by radial pins in the shell

Diaphragms

Nozzle diaphragms are attached to the inside diameters of both the second and third stage nozzle segments The diaphragms prevent gas leakage past the inner sidewall of the nozzles and the turbine rotor Labyrinth seal teeth are machined into the inside diameter of the diaphragms and mate with opposing sealing lands on the turbine rotor Minimal radial clearance between stationary components (diaphragm and nozzles) and the moving rotor is essential for maintaining low interstage leakage

Shrouds

The turbine bucket tips run against annular curved segments called shrouds The shrouds provide a cylindrical surface for minimizing bucket tip clearance leakage The shrouds also provide a high thermal resistance between the hot gases and the comparatively cool turbine casing

The first and second stage stationary shroud segments are in two pieces, inner and outer The gas-side, inner shroud is separated from the supporting outer shroud to allow for expansion and contraction, thereby improving fatigue life

The shroud segments are maintained in position by radial pins in the turbine casing Joints between shroud segments are sealed by interconnecting tongues and grooves

6 2 6 Exhaust Section

The exhaust frame is bolted to the aft flange of the turbine casing Structurally, the frame consists of an outer cylinder and an inner cylinder, interconnected by radial struts The No 2 journal bearing is supported from the exhaust frame inner cylinder

The exhaust diffuser, located at the aft end of the turbine, is bolted to the exhaust frame Gases exhausted from the third turbine stage enter the diffuser where the gas velocity is reduced and pressure is increased

The exhaust frame radial struts cross the exhaust gas stream The struts are maintained at a constant temperature to control the center position of the rotor in relation to the stator This temperature stabilization is accomplished by protecting the struts from exhaust gases with a metal fairing The metal fairing forms an air space around each strut and provides an airfoil shape Blowers provide cooling air flow through the space between the struts and the fairing to maintain a uniform temperature The cooling air is then directed to the third-stage aft wheelspace

The gas turbine support system consists of four support legs and two gib blocks The forward support legs are fixed, while the aft support legs are pivoted With this design, the axial growth of both the rotor and stator is aft from the thrust bearing forward support leg system One gib is integral with the forward compressor casing and the other integral with the exhaust frame both are located on the vertical center plane of the unit This method of support, together with the integral No 1 bearing and the centerline supported No 2 bearing, assures precise internal and external alignment control under all operating conditions

6 2 7 Bearings

Friction (Sliding) Bearings

The majority of bearings in use today are of the sliding friction type These include all bearings, either journal or thrust, that depend on a lubricating film to reduce friction between the shaft and the bearing A hydrodynamic oil film (wedge) is created by the rotation of the shaft As the oil enters the space between the shaft and bearing, the oil pressure increases proportionally This pressure increase lifts the shaft from the bearing See **Figure 6-22**

When properly designed and lubricated, friction bearings develop tapered, hydrodynamic oil films which have tremendous load carrying capacities In general, bearings of this type are better adapted to supporting heavier loads and shock loads than anti-friction bearings

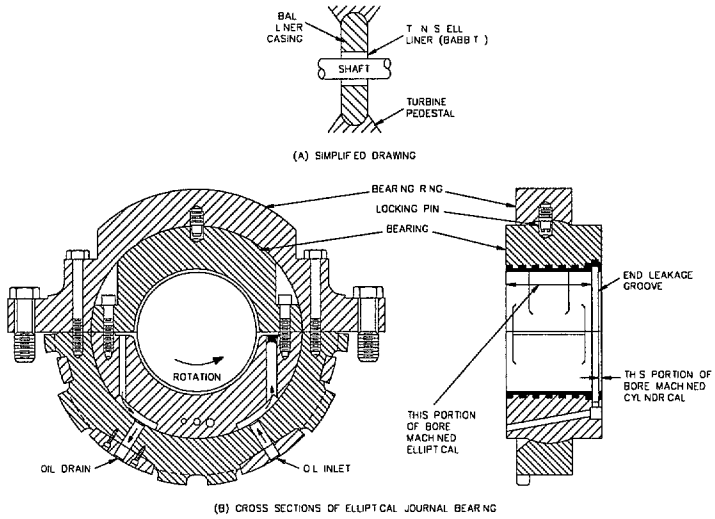

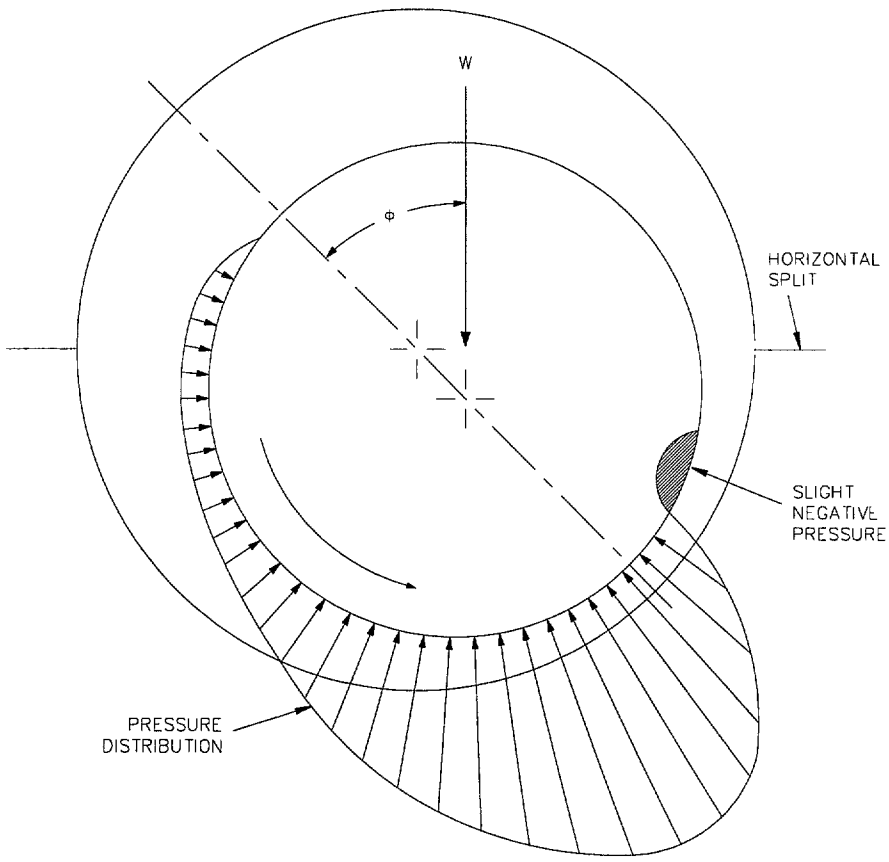

Figure 6-22 Journal Bearing Cross-Section and Oil Pressure Distribution

596

Under hydrodynamic conditions, the coefficient of friction is usually very low However, fluid friction increases in proportion to the square of the speed At high speeds, the coefficient of friction may be considerable When properly designed, friction bearings can operate at speeds of 25,000 rpm or more Under certain operating conditions, a hydrodynamic film may not develop and boundary lubrication exists Boundary lubrication results in the coefficient of friction being appreciably higher

Because of the inherent characteristics of the lining materials and the flushing action of the lubricant, friction bearings are not overly sensitive to contaminants Other advantages are that friction bearings are relatively inexpensive and operate very quietly

Running clearance, necessary for proper formation of the oil film, must be carefully controlled if shaft centers are to be held within close tolerances Close tolerances can be accomplished with proper bearing finishes and through proper design

As noted earlier, friction bearings come in two types and each of these types have sub-types as shown below

- Journal Bearings
    - Solid sleeve bearings
    - Cylindrical bearings
    - Pressure bearings
    - Elliptical bearings
    - Axial groove bearings
    - Tilting pad bearings
- Thrust Bearings
    - Flat land thrust bearings
    - Taper land thrust bearings
    - Kingsbury thrust bearings

The more common bearing sub-types used in gas turbine applications are described in the following text, discussing construction, operation, and use

59

Journal Bearings

A journal bearing prevents side-to-side movement of the shaft The surface of the shaft slides over the surface of the bearing A small space between the bearing and the shaft allows lubricant to separate the surfaces

Journal bearing assemblies are often quite simple As shown in **Figure 6-22**, the bearing is made in two halves, split at the horizontal centerline This design is obviously the most logical and simple method of assembling the bearing around the journal The split halves are usually bolted and doweled together to ensure proper alignment and support for both halves

The bearing itself is usually manufactured as part of a larger metal casing, referred to as the bearing liner The bearing liner has a babbitt bore that becomes the load bearing surface In most cases its outer diameter takes the form of a partial sphere, which mates with a similar spherical surface (ball seat) in the supporting pedestal It is then possible to apply a pinching action to the bearing liner by bolting down the bearing cap This action locks the bearing liner in place

The spherical or ball-seat bearing allows the bearing to slip to the true axis of the shaft within reasonable variations when assembling the bearing Once the bearing cap is bolted, the bearing is "pinched" or held firmly in a fixed position relative to the line of the shaft In fact, the bearing can be unintentionally misaligned in the process of assembly by installing the bearing cap bolts in the improper sequence

There are many other variations of the spherical seat support not mentioned here In other designs, the spherical seat is discarded for a simple tongue-and-groove assembly in which a projection on the bearing liner fits into a groove provided around the bore of the pedestal

Tilting Pad Bearing

Over the past fifteen years, turbine-generator unit output has grown tenfold, while the relative shaft inertias have increased by only a factor of five Thus, dynamic forces have a greater effect on the operating stability of the turbine rotor A greater degree of damping is required with many high-pressure and intermediate-pressure rotors, to avoid erratic vibration patterns The tilting pad bearing is used in such applications since it possesses excellent stability properties

The bearing pads are made from a high-grade steel forging lined with a high-quality, tin-base babbitt Dovetail anchorages are also provided as a backup for the carbon steel/babbitt bond The pads are located in a steel casing and have radiuses both circumferentially and axially on their backs to ensure correct hydrodynamic action and alignment at all times This double-tilt action, together with the naturally stable characteristics of this type of bearing allow for smooth operation of the unit and, therefore, increased reliability Adjustment of the center line of the bearing relative to the pedestal may be achieved using similar techniques to those for the elliptical bearing

Because of their excellent stability, tilting pad bearings or pivoted shoe bearings are usually used where shaft stability is a problem They are used in the high pressure and reheat sections of all modern large steam turbines as well as gas turbines

As the name implies, the pad bearing is made up of a series of individual babbitted segments or shoes upon which the journal rides These shoes can vary in number The more common designs have arrangements of four, five, or six pads **Figure 6-23** depicts a typical tilting pad bearing design

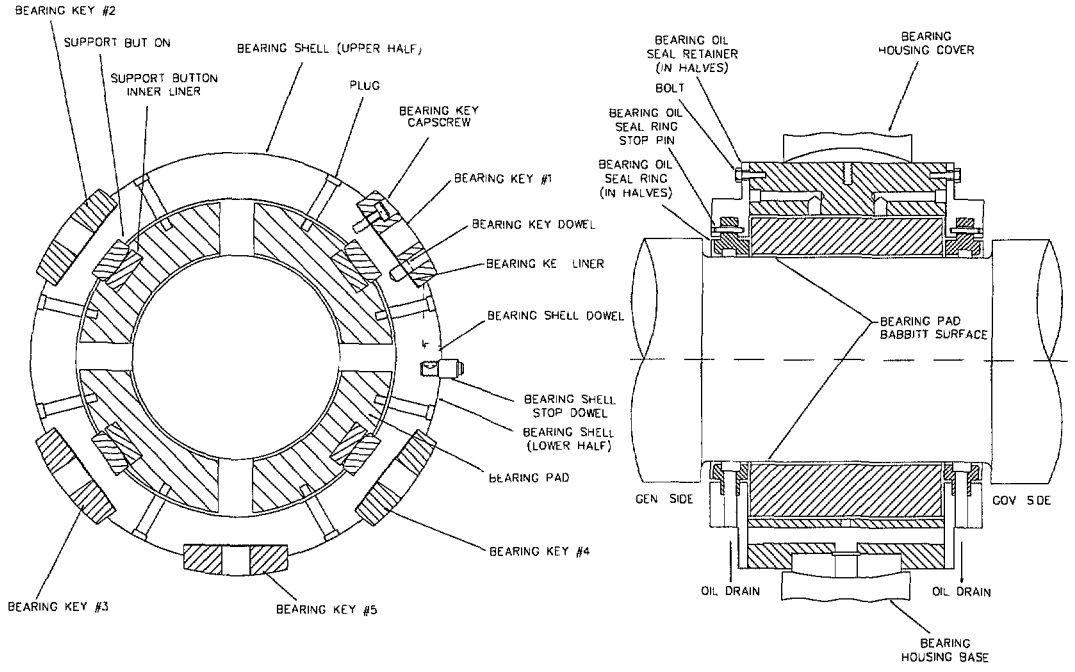

Figure 6-23 Tilting Pad Bearing

The pads usually have projections that fit under lips machined in the bearing casing The lips prevent the pads from moving radially Circumferential movement is prevented by locating pins through the housing into the pads The holes in the pads into which the pins protrude are larger than the diameter of the pins to prevent seizing and to allow free tilting action of the pads

This rocking or tilting action of each pad takes place between the back radius of the pads and the inner bore diameter of the casing in the region of the pins on a line contact The line contact is produced by making the back radius of the pads smaller than that of the housing

Lubrication of the bearing is accomplished primarily by flooding the compartment which contains the pads Oil flows to the housing through orifices located between the pad segments The oil flow out of the bearing is controlled largely by the wiper or seal clearance at the end of the housing, or drain orifices provided in the housing Flood lubrication allows a portion of the oil to pass through the bearing without lubricating the interface between pads and journal In addition, rotation of the journal produces centrifuge forces which throw the oil radially outward and actually prevents oil from entering the clearance space The churning of oil and the turbulence in the chamber create more losses For these reasons, pivoted shoe bearings are well known for their large oil requirements and high power losses

In terms of stability, however, the tilting pad bearing is effectively used as a damping measure where shaft instability exists At light loads, the hydrodynamic loading of the top pads is instrumental in stability by essentially increasing bearing loading

Despite the relatively short span of the pads, the load capacity of tilting pad bearings is on the same order of magnitude as conventional bearings One of the factors which contributes to this is that the lower-half pads contribute actively to the load capacity In conventional bearings, the diverging portion of the bearing contributes little, except to increased power loss

Thrust Bearings

In a gas turbine, the axial clearances between the rotating and stationary parts are quite close, on the order of a few thousandths of an inch At the same time the force of the gas on the rotating elements is such that considerable axial thrust may be produced It is essential, therefore, to provide a means to position the rotating element of a turbine while absorbing axial thrust In turbines and other equipment subjected to similar forces, this is accomplished by means of a thrust bearing

The thrust bearing is a stationary element with a babbitt surface supported to withstand large loads The thrust bearing is both a positioner and a load absorber In a thrust assembly, the thrust plate with its babbitt surface is located in close proximity to a flat rotating surface on the shaft known as a thrust collar or runner This arrangement is shown in **Figure 6-24** Thrust loads are transmitted from the shaft by the thrust collar pushing against the thrust plate The action of the rotating surface against the stationary plate is again a sliding action, and hydrodynamic film pressures can be developed as discussed previously

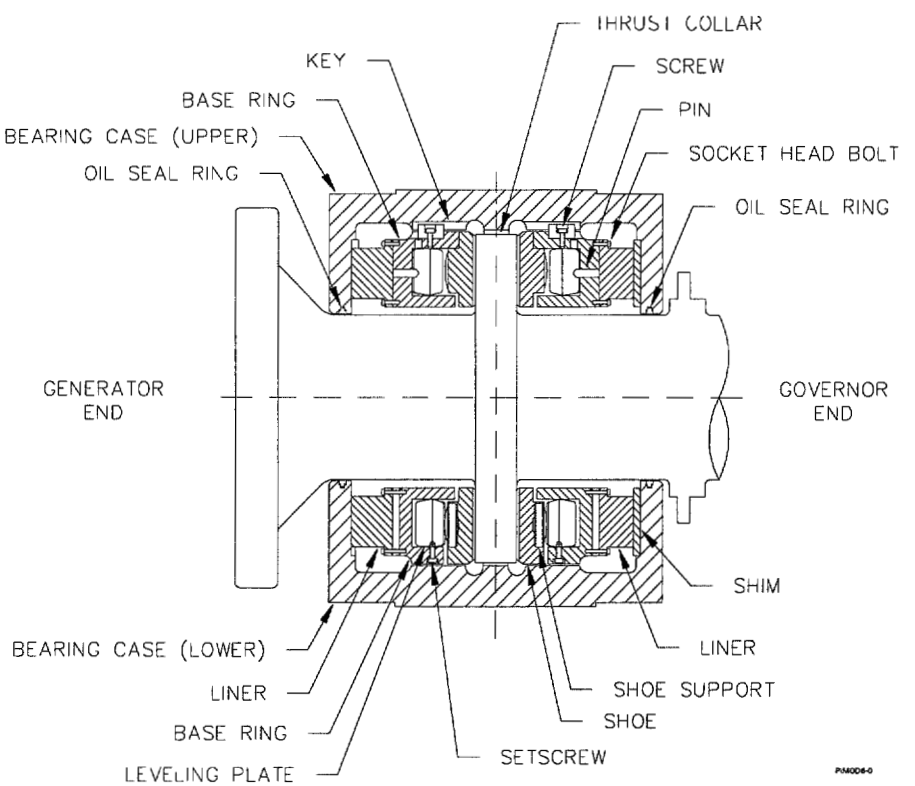

Figure 6-24 Thrust Bearing

601

The thrust load on most turbines may change direction under certain conditions such as startup For this reason, two thrust plates are usually provided in thrust assemblies to absorb thrust in either direction Normally, there is a large load in one direction and, at a different time, a somewhat lesser load in the opposite direction

The thrust plate absorbing the most load (usually in the downstream direction) is called the active thrust plate and the other the inactive thrust plate The inactive thrust element can be somewhat smaller in size than the active one, but in many cases, both active and inactive thrust plates are the same size

As noted previously, the surface of the thrust plate is coated with babbitt similar to a journal bearing In most thrust plate designs, the actual thrust surface is broken by a series of radial grooves The radial grooves pass a quantity of lubricant The grooves make the thrust surface appear as a series of separate pads These pads are also often referred to as lands Thrust bearing types are frequently denoted by the type of land or pad design incorporated in them

As in the journal bearings, the thrust bearing load is supported on a thin film of oil Under proper conditions, there should not be any metal-to-metal contact during operation Some babbitt wear can be experienced during low-speed operation where hydrodynamic forces are not produced and the bearing operates in the region of boundary lubrication Wear can also occur during operation if the lubricant contains an excess amount of foreign material

In general, there are three main classes of thrust bearings employed These are the flat land, tapered land, and Kingsbury thrust bearings

Flat Land Thrust Bearing

The flat land thrust bearing is the least complex of presently used thrust bearing designs The flat land thrust bearings surface facilitates manufacturing the bearing and, therefore, reduces costs The load capacity of this bearing is relativity low, making it more useful as a positioner than a thrust absorber The fact that the bearing can carry any load at all is somewhat surprising since the all-important oil wedge is non-existent However, radial grooves in the thrust face pass a quantity of oil for lubrication and cooling the surface, and minute misalignments and radii on the off grooves are sufficient to produce some amount of wedge action to sustain small loads

602

Tapered Land Thrust Bearing

In general appearance, the tapered land thrust bearing resembles the flat land thrust bearing The bearing surface is divided into a number of pads separated by an equal number of oil feed grooves In the tapered land bearing each pad is tapered in a circumferential and radial direction so that the motion of the runner wipes oil into the contacting wedge-shaped area This action builds up load-carrying oil pressures This type of bearing is a reliable bearing and it is commonly used on steam turbines as the active element

The total number of pads may vary from 6 to 14 depending on the shaft size The number of pads varies in multiples of two (i e , 6, 8 10, etc) with the smaller number of pads being applied to the smaller diameter plates The horizontal split can then be made through the oil groove The dimensions of the grooves between pads are arbitrary The grooves are usually as deep as they are wide, although this may not be necessary in certain instances However, grooves must be large enough to pass the required amount of oil At the outside end of the radial groove, a dam is provided to control the leakage of oil from the grooves to the outside of the plate These dams are sized to pass sufficient oil to maintain a 30°F temperature rise between inlet oil temperature and the drain oil temperature

Although tapered land thrust plates have a high load-carrying capacity, they are prone to misalignment Experiments have shown that thermal distortions contribute heavily to thrust bearing failures in many cases Uneven temperature distributions around the thrust plate result in distortion which destroys the oil film To alleviate this problem, copper-backed plates have been employed Copper, being an excellent conductor of heat, provides a more uniform temperature distribution between lands

Kingsbury Thrust Bearing,

The Kingsbury thrust bearing, one version of a tilting pad type bearing, has been widely adapted to rotating machinery The Kingsbury thrust bearing differs from a tapered land or flat land thrust in that each pad is an individual plate which is free to tilt about a pivot as shown in **Figure 6-25**

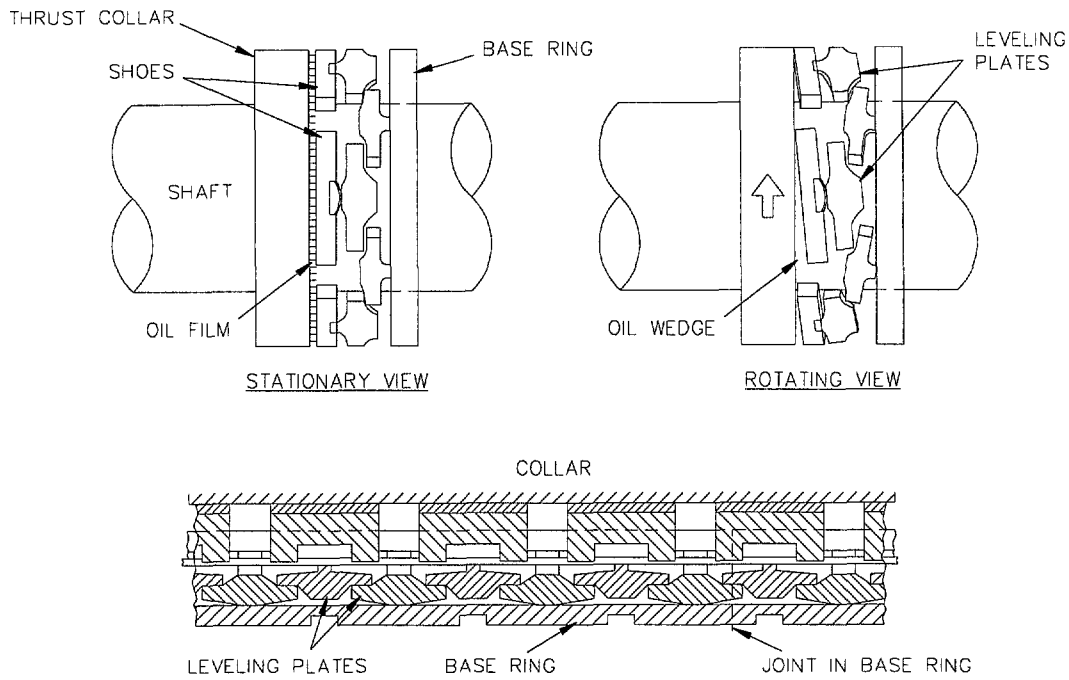

Figure 6-25 Kingsbury Thrust Bearing

Normally, the pivot takes the form of a hardened spherical surface which is inserted behind each pad The pad is then free to tip in a radial or circumferential direction, or a combination of the two This tilting feature compensates for any misalignment that may exist between thrust plate and thrust runner When the runner is stationary, the pads lay with their faces parallel to the runner face As the runner starts to rotate, an oil film is created between the pad and runner and each pad tilts to an angle that generates the proper distribution of film pressure

6 2 8 Gears and Couplings

The primary purpose of a coupling is to transmit rotational motion from one shaft to another shaft Couplings also perform several additional functions These include providing for the quick disconnect of a driver (motor or engine) from the driven equipment (such as a pump), allowing some degree of relative axial motion (such as due to thermal expansion), reducing or eliminating vibration transfer from one component to another, and permitting varying amounts of misalignment (although the desire is always for complete alignment between the driver and the driven equipment)

604

Couplings are used in gas turbines to connect the gas turbine output shaft to the load, and in some cases to connect the gas turbine shaft to the accessory gearbox Several types of coupling designs are used in gas turbines, depending on the application A brief overview of coupling designs and types used in gas turbine systems is provided in the following section

Types of Couplings

There are many different types of rotating equipment couplings Most couplings can be classified as either rigid or flexible Rigid couplings do not compensate for misalignment and are used mainly to connect the shafts of large rotating equipment, e g , steam turbine and generator Flexible couplings are generally used to connect small and medium sized rotating equipment Common types of rigid and flexible couplings are described below

Rigid Couplings

Two common types of rigid couplings are the flanged coupling and the ribbed coupling The flanged coupling is usually made with flat faces but can also be a male-female joint design The ribbed coupling is usually used where two or more long shafts are connected, e g , a line shaft If the shafts are small in diameter, the coupling may be solid instead of split

Flexible Couplings

Flexible couplings compensate for temperature changes and permit end movement of the shafts without placing unwanted stresses on bearings and seals Flexible couplings should not be used to compensate for misalignment Types of flexible couplings include gear, diaphragm, spring grid, metal disk, chain, elastomeric, and three-jaw Flexible couplings consist of two hubs attached to the driver and driven shafts, with a flexible spacer inserted between them The hubs may be attached to the shafts by a keyway, taper-fit, or other means

Flexible coupling hubs must be aligned to within manufacturer's specifications for the driven equipment, driver, and the coupling In addition, some equipment may require that the coupling permit end float of the shaft, but limit the end float to a certain amount Many equipment manufacturers specify alignment and end float requirements, others do not In all cases, manufacturers' literature and drawings

605

should be referenced for specifications Most couplings used in gas turbine applications are of the flexible design, with gear and diaphragm couplings being most widely used

Gear Couplings

Gear couplings (see **Figure 6-26**) are used to connect the gas turbine to the load and to the accessory gearbox The hubs of a gear coupling are connected by a split sleeve The hubs are aligned on the shafts with the sleeve halves in place behind them The sleeve halves are then slid into place over the hubs and are bolted together The hub and sleeve teeth are packed with lubricant before assembling Alternately, a continuous flow of oil may be supplied to the coupling for lubrication during operation

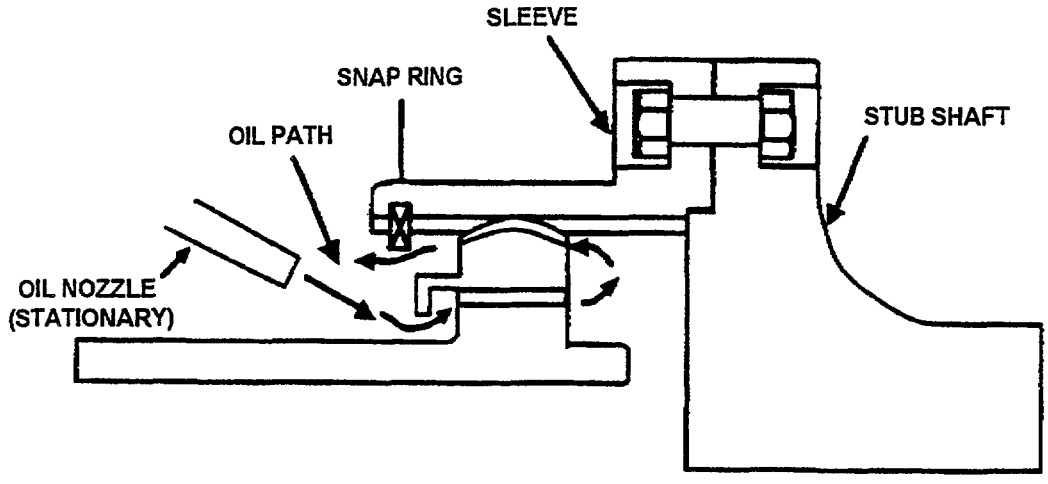

Figure 6-26 Gear Coupling

The coupling gear teeth are designed with a small amount of backlash to permit minor parallel and angular misalignment Gear couplings also permit end float High-speed gear couplings are usually dynamically balanced

Successful operation of gear type couplings depends on several factors including alignment, sliding velocities, lubrication, load and materials Some features of gear type couplings that allow superior service characteristics are

- Nitriding gear teeth to maximize wear resistance
- Match lapping for maximized tooth contact
- Teflon coating to ease the break-in period

Diaphragm Coupling

The diaphragm coupling uses several layers of thin steel, called a disk pack, to compensate for misalignment Generally, the disk pack is bolted alternately to the hub and a center spool In some couplings, the center ring is left out and the disk packs are bolted to each other

The diaphragm or disk type coupling offers several advantages over the gear type coupling The most notable of these is the elimination of gear teeth Therefore diaphragm couplings do not require a lubrication system, and transmit motion smoothly, without backlash With diaphragm couplings, no oil leaks are possible and no oil flow checks are required Concern over sliding velocities, friction factors, and heat generation are all eliminated By design, the diaphragm stresses are calculable

This results in a greater overall misalignment tolerance between the driver and the driven component This type of coupling can operate under a wider range of misalignment

Spring Grid Coupling

The hubs of a spring grid coupling are connected by a high-strength metal grid The spring grid interlaces between grooves in the hubs and transmits rotational motion from the driver shaft to the driven shaft The spring grid coupling allows minor parallel and angular misalignment, and can provide freedom for end float

6 2 9 Turbine Base and Supports

Gas turbines are well known for their modular construction This feature is the primary reason for their ease of transport and installation To allow for this flexibility, it is important to design and manufacture these characteristics into the components

Accordingly most manufacturers build their machines on modular bases that allow for easy road, rail or sea transportation Another benefit of mounting gas turbine components on a prefabricated base is the ability to place other system components inside the base For example, it has been customary to place the lube oil reservoir inside the base of one of the compartments This method allows optimum use of space while employing standardized modular construction techniques

All gas turbine manufacturers use structural steel fabricated bases for the gas turbine and its support systems The bases provide the mechanical support for the gas turbine and other components Several machined pads are provided on the bottom of the bases to mount them on the site foundations, while machined pads are also provided on the top of the bases for placing the turbine supports

Typically, gas turbines are mounted on their bases by vertical supports at three locations the forward support at the lower half vertical flange of the forward compressor casing, and on both sides of the turbine exhaust frame The forward support (cold end) may be a flexible plate that is bolted and doweled to the turbine base at the forward base cross-frame beam The forward support plate is also bolted and doweled to the forward flange of the compressor casing Other designs use a rigid forward support and flexible rear supports

The aft supports, one on each side of the turbine exhaust frame are leg type supports Both vertical support legs rest on machined pads on the base and attach snugly to the turbine exhaust-frame-mounted support pads These leg supports provide centerline support and casing alignment

On the inner surface of each support leg a water jacket is provided Cooling water is circulated through the water jacket to minimize thermal expansion and to assist in maintaining alignment between the turbine and the generator in hot-end drive gas turbines The support legs maintain the axial and vertical positions of the turbine, while a gib key coupled with the turbine support legs maintains the turbine's lateral position

605

For lateral positioning of the turbine, a gib key is typically machined on the lower half of the exhaust frame The key fits into a guide block that is welded to the aft cross beam of the turbine base The key is held securely in place in the guide block with bolts that bear against the key on each side This key-and-block arrangement prevents lateral or rotational movement of the turbine while permitting axial and radial movement resulting from thermal expansion

6 2 10 Unit Enclosures

Historically, gas turbines have been installed in outdoor locations in a variety of ambient environments To accommodate these requirements, most manufacturers package their gas turbines in enclosures for outdoor installation The size of a typical enclosure is kept as small as possible to allow for road shipment Therefore equipment inside the enclosures is tightly packaged

At a minimum, enclosures should allow access to the combustion system and turbine area for maintenance by removal of side frames and other obstacles A major benefit of using enclosures for various components and systems of the gas turbine is the ability to isolate these components in case of a fire and inject a fire extinguishing agent into the enclosure Since the enclosure is capable of being sealed from the outside environment and has smoke/fire detectors, the fire can be extinguished remotely in a relatively short period of time Fire protection piping and nozzles should be installed below the webs of I-beams, and removable sections should be designed into the side frames for accessibility and maintenance

In addition to providing protection from the weather and hostile ambient conditions, gas turbine enclosures provide a substantial amount of noise attenuation The enclosure in many cases provides compliance with the requirements of regulatory agencies such as OSHA and of neighboring communities

6 3 Gas Turbine Generator

In the last fifty years generator designs and capabilities have evolved from slow-speed vertical shaft units to high-speed horizontal shaft air-cooled units, through hydrogen-cooled units to direct water-cooled units

During the 1950s through the mid-1970s, much emphasis was placed on developing units to support the rapid growth in unit ratings, which increased from 100 MW to more than 1100 MW In the early 1960s, packaged gas-turbine-driven generators were introduced These applications were characterized by the ambient-temperature following nature of the gas turbine output, and the ability of the gas turbine to provide peaking capability for short periods Generator designs were developed which were tailored to gas turbine applications As new gas turbines were introduced, generator designs were introduced to match the new gas turbine ratings

Over the course of the past decade, the emphasis in new electric power generation installations has shifted away from large units delivering major blocks of power to smaller units operated not only by utilities, but by cogenerators or other smaller independent power production (IPPs) companies In response to this change, gas turbine manufacturers are placing a major emphasis on the design and development of generators suited to these applications

Generators used in gas turbine power generation applications can be placed in three major design classifications based on the cooling medium used air, hydrogen or liquid cooled How well the armature winding of a generator is cooled has a significant influence on the overall size of a synchronous generator The cooling of the armature winding is dependent on a number of factors cooling medium (air, hydrogen, water), insulation thickness, and overall electrical losses (I^2R + load loss) As **Figure 6-27** shows, relative heat removal capability improves from air to hydrogen, with increased hydrogen pressure, and even more significant with the use of water cooling

FLUID	RELATIVE SPECIFIC HEAT	RELATIVE DENSITY	RELATIVE PRACTICAL VOLUME FLOW	APPROXIMATE RELATIVE HEAT REMOVAL ABILITY
AIR	1 0	1 0	1 0	1 0
HYDROGEN 30 PSIG (2 07 BAR)	14 36	0 21	1 0	3 0
HYDROGEN 45 PSIG (3 10 BAR)	14 36	0 26	1 0	4 0
WATER	4 16	1000 0	0 012	50 0

Figure 6-27 Generator Heat Removal Capabilities of Various Fluids

Conventional hydrogen cooling can be utilized on generators rated below 300 MVA, while direct water cooling of armature windings is applied to units above 250 MVA This division results from design optimization While it is possible to apply water cooling on machines rated below 250 MVA, the cost/performance benefit suffers Water cooling adds manufacturing complexity, as well as, requires the need for an auxiliary water cooling and deionizing skid, plus associated piping, control and protection features At higher ratings, the cost of this complexity is offset by the advantage of producing a generator of significantly smaller size than a comparable conventionally-cooled generator An overview of each of the basic design classifications is provided in the following section

Air-Cooled Generators

Air-cooled generators are produced in two basic configurations open ventilated (OV) and totally-enclosed water-to-air-cooled (TEWAC) In the OV design, outside air is drawn directly from outside the unit through filters, passes through the generator and is discharged outside the generator In the TEWAC design, air is circulated within the generator, passing through frame-mounted air-to-water heat exchangers

The recent emphasis in the marketplace on steam and gas turbine-generators in the 20 to 100 MVA size has forced manufacturers to restructure their air-cooled machines A consequence of the historical development of the turbine-generator market was that two lines of generator applications evolved, one for steam turbine applications and the other for gas turbine applications, with little standardization between the designs As a result of design restructuring, several design and operational issues which were judged to be critical to the reliability and standardization of generators were identified Among these issues were performance parameters, availability of features, cycle time and cost effectiveness

The basic design of a generator is influenced primarily by material and electromagnetic properties, as well as winding temperature rise, industry standards, generator ratings, reliability, etc A short discussion of the critical factors follows

Temperature Rise

In the early 1970s, gas turbine manufacturers introduced insulation systems capable of operating at Class F temperatures (155°C, 311°F) for the life of the generator This enabled a significant uprating of generator designs (about 10%) with a minimal increase in cost To capitalize on this technical capability, manufacturers designed generators with class F insulation and Class F temperature rises Many such generators are in service and operating successfully

Generator Ratings

In a rapidly developing technology such as that of the combustion turbine, it is inevitable that the output of a given gas turbine frame size will be increased from time to time Increasing output has required redesign of the generator to keep pace with the rise in turbine output The ratings of the generators designed to match the gas turbine frame sizes have been set so that the generator will meet or exceed the gas turbine capability over the full operating temperature range taking into account the expected turbine upratings during the lifetime of the design

Another important consideration that affects the generator rating which must be taken into account is the use of steam and water injection for NO_x control The output of the gas turbine can increase by 5% or more above its dry ISO rating, depending on the level of steam or water injection required to meet the emission requirements For the generator to have sufficient capacity to match the gas turbine at the required NO_x requirements, this additional factor must be added to the generator rating

Reliability

To improve generator reliability, manufacturers pay particular attention to known problem areas based on in-service generator experience The new designs strive for a high level of reliability and availability based on the problems that have caused down time on older designs In addition, the reliability of the product is improved through design simplification and standardization, discussed below

Product Standardization

Standardization of the generator product lines has significant benefits both to the user and to the manufacturer From the user's viewpoint, the standardization of the product line translates into a simpler machine with fewer unique parts, easier spare parts access and the reliability benefit of a larger fleet of identical machines, with the rapid identification of any performance problems that this brings The benefits to the manufacturer are that with fewer unique parts to track and check, fewer different assemblies to build and fewer drawings to keep up to date, the job of building a high-quality machine becomes simpler

The impact of standardization is illustrated in **Figure 6-28**, which shows the reduction in the number of parts and drawings required to build a single new design as compared to its predecessor When these gains are compounded by the reduced number of unique designs, there is a profound effect on the productivity and quality of the manufacturing operation

	OLD DESIGN	NEW DESIGN
REDUCTION IN NUMBER OF PARTS	1 0	0 6
REDUCTION IN NUMBER OF DRAWINGS	1 0	0 7

Figure 6-28 Impact of Standardization in Generator Design

6 3 1 Construction

Generator Design and Construction

There are two main components in the generator, the rotor and the stator The generator must also have a source of DC current to magnetize the rotor, called the exciter The generator may have several components and subsystems, depending on its particular features The following is a discussion on the main components of a generator

Generator Stator and Windings

The generator stator, also called the armature, supports the iron core and windings, the rotor, and the compartment coolers The stator consists of a steel plate casing called the "wrapper" that covers a frame that in turn holds the iron core An iron core is used in order to produce a stronger magnetic field for the generation of voltage There are tubes within the wrapper to help distribute cooling gas

Older units use air at atmospheric pressure for cooling Newer generators use hydrogen under pressure (from 15 to 75 psig) for cooling Hydrogen is more effective than air in dissipating heat, and the higher the hydrogen pressure, the more effective the hydrogen is in removing heat

Figure 6-29 shows a typical stator The core is made up of thousands of laminated steel sheet metal punchings, each of which is insulated from the others Note that the core is referred to as "iron" even though it is made up of these steel punchings The insulation is necessary to avoid creating large currents in the core that would cause it to heat up to an unacceptably high temperature The punchings are "stacked" with spaces between groups of punchings to allow for cooling ventilation

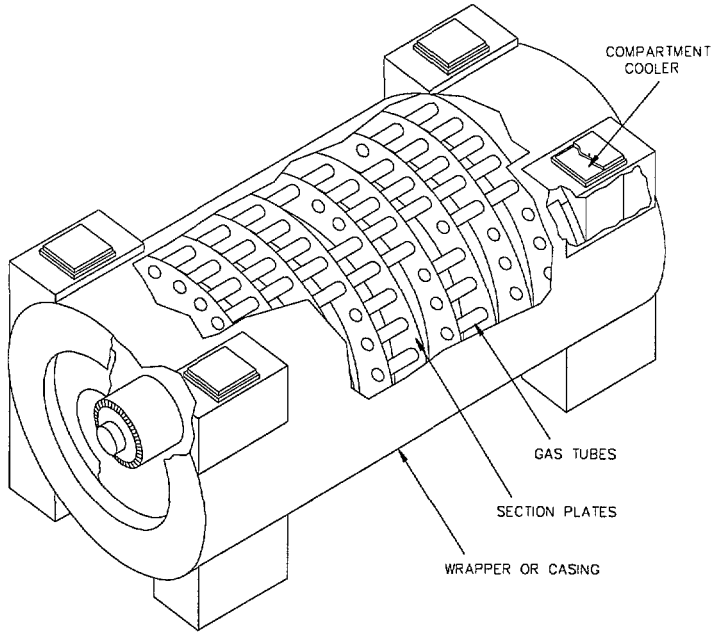

Figure 6-29 Generator Stator

The windings or conductors for the stator take the form of long copper bars that are wrapped with insulation The bars fit into the longitudinal slots on the inside diameter of the core and are held in place by wedges that slide into the top of the slot **Figure 6-30** shows the assembly of the bars in a slot Note that there are generally two bars, one on the top and the other beneath, in each slot

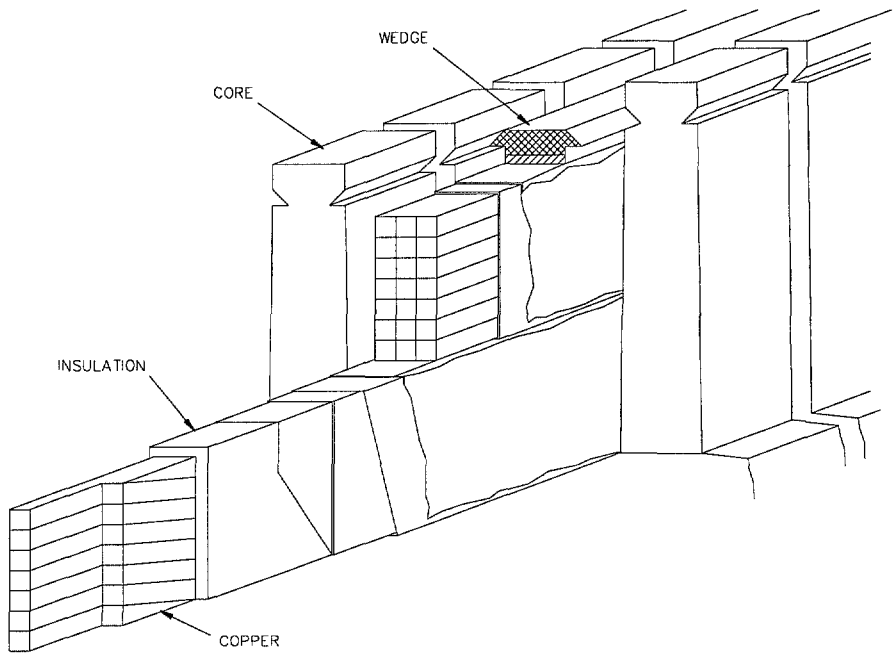

Figure 6-30 Generator Stator Construction Detail

Some generators have liquid cooled stator windings, the liquid may be oil, or more often, water In these units the copper bars have many passages along their length for liquid to flow

The stator windings are tied together at the ends of the stator and are brought out through the casing through a bolted-on assembly called the lower frame extension (or as it is sometimes called, the bath tub) at the bottom to terminals There are generally six terminals, one for each end of each of the three phases in the windings

615

Stator Design-Air and Hydrogen Cooled Generators

The stator frame is divided onto an inner and an outer section, both of which mount on a single base fabrication The inner frame is a very simple structure designed to support the stator core and winding while providing some guidance to the air flow in the machine The stator core, made from grain-oriented silicon steel for low loss and high permeability, is mounted rigidly in the inner frame Isolation of the core vibration from the remainder of the structure is accomplished through the use of flexible pads between the feet on the inner frame and the base structure

The outer frame is a simple fabricated enclosure, which supports either the air inlets and silencers (if the unit is open ventilated or the roof and cooler enclosure (if the unit is totally enclosed, water-to-air-cooled) The outer frame further acts as an air guide to complete the ventilation paths and as a soundproof enclosure to keep noise levels low Since the rotor is pedestal mounted, the end shields are very simple structures

The entire generator is mounted on a single fabricated base, which supports the pedestals, the inner and outer frames, and the brush rigging or the exciter The base contains piping for oil supplies, conduit for wiring and a number of components associated with the main leads, such as lightning arresters and surge capacitors The structural vibration of the base is confirmed by tests to verify the vibration frequency is well away from any frequency of concern

The stator winding is a conventional lap-wound design The insulating materials have been in use since the early 1970s, thus maintaining the proven reliability record The materials are all designed and tested to provide reliable performance at Class F temperatures for the life of the machine The bars are secured in the slots with fillers and top-ripple springs to restrain the bars radially, and with side-ripple springs to increase friction between the bar and the slot wall The side-ripple springs are also conducting to ensure proper grounding of the bar surface The end winding support system is the proven approach used on conventionally-cooled stators of all sizes built by GE This system utilizes resin-impregnated glass roving ties

6/6

Hydrogen-cooled generator construction except for the frame, is very similar to that of air-cooled generators Most designs use direct radial flow cooling similar to that shown in **Figure 6-31** The stator frame, on the other hand, because of the need to contain 30 psig to 75 psig hydrogen, uses thick plate cylindrical construction End shields are more rugged and contain a hydrogen seal system to minimize leakage Conventional hydrogen cooling, while available for generators rated below 100 MVA, is most often applied to gas and steam-turbine-driven units above 100 MVA

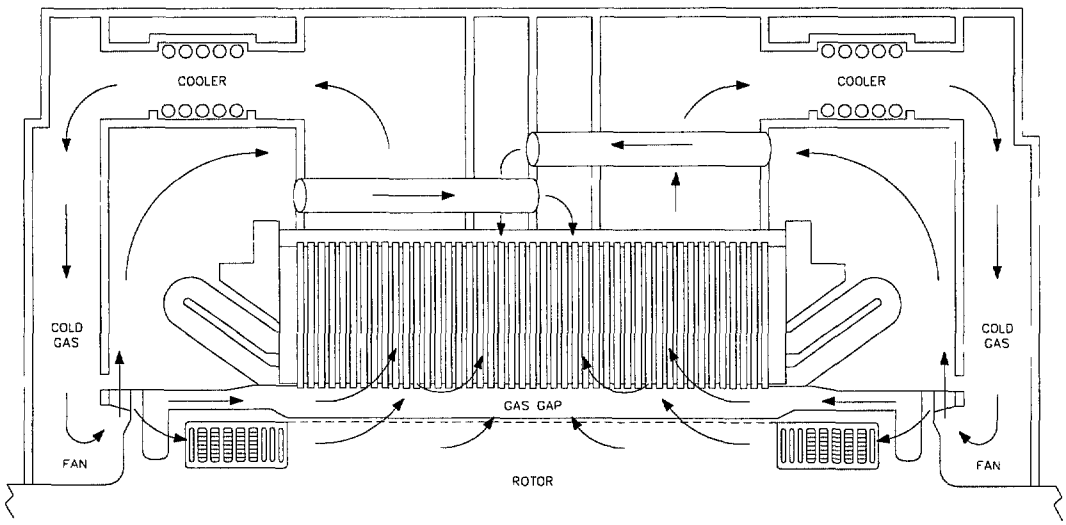

Figure 6-31 Hydrogen Cooled Generator Cooling Flow

Stator Design - Hydrogen/Water Cooled Stators

Even more compact generator designs are achievable through the use of direct water cooling of the generator armature winding These designs employ hollow copper strands through which deionized water flows The cooling water is supplied by a closed-loop auxiliary-base-mounted skid The cool water enters the winding through a distribution header on the connection end of the generator The warm water is discharged in a similar manner on the turbine end of the generator

67

The armature voltage and current of a hydrogen/water-cooled generator is significantly higher than those of air- or hydrogen-cooled units As a result, the insulation voltage stress and forces on the armature windings can be several orders of magnitude larger than those experienced on lower-rated units These present unique design requirements that must be addressed if high reliability and long life of the equipment is to be maintained

The stator insulation material used in modern GE water-cooled generators consists of an epoxy-mica-based system called Micapal Micapal I was introduced in 1954, partially as a solution to tape migration and girth cracking problems associated with asphalt insulation-based systems

In the mid-1970's, an improved epoxy-mica system was introduced (Micapal II) This all-mica paper insulation has improved mechanical toughness and voltage endurance While these properties were developed to meet the requirements of very large ratings, the application of Micapal II on small and mid-size units permits further optimization opportunities Micapal II has excellent thermal cycling capability, and is particularly suited for the daily start/stop duty required of many gas turbine generators today

Generator Rotor

The rotor acts as a large electromagnet When it turns inside the stator, it induces a voltage and current in the stator windings The rotor takes the form of a long cylinder with slots machined along its length Copper windings fit into these slots and are held in place by wedges that slide into the top of the slots The slots are insulated from the windings, and each turn of the winding is insulated from the next turn The windings are held at the ends of the rotor by retaining rings The wedges and windings often have holes or slots in them to allow cooling gas to flow

Most units in the U S operate at 3600 rpm These units have what is known as a two pole winding That is there is one winding in the field and it acts as one, large electromagnet with two poles as shown in **Figure 6-32** Some units operate at half the normal speed, 1800 RPM In order for these units to produce power at the same frequency as the 3600 rpm units, it is necessary to use a four pole winding

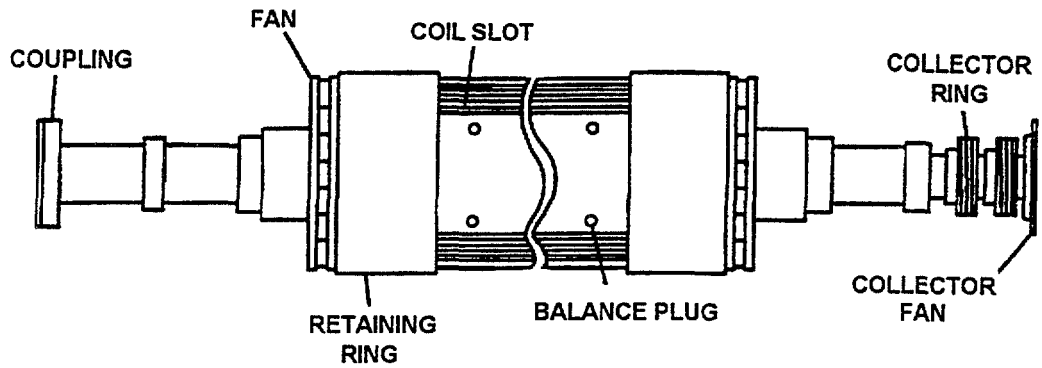

Figure 6-32 Generator Rotor

There are two sets of windings in the field, producing, in effect, two large electromagnets, for a total of four poles The result is that the windings in the stator change magnetic flux at the same frequency as they would if there were a two pole unit operating at 3600 rpm

There are fans mounted on the ends of the rotor to circulate cooling gas inside the generator stator The fans may be axial or centrifugal

Collector rings are provided at the generator end of the rotor The field windings are connected to these collector rings DC current passes through brushes that ride against these rings, and that current magnetizes the field

Figure 6-33 shows a cross section through one slot with its windings, illustrating the flow of cooling gas as well as the insulation

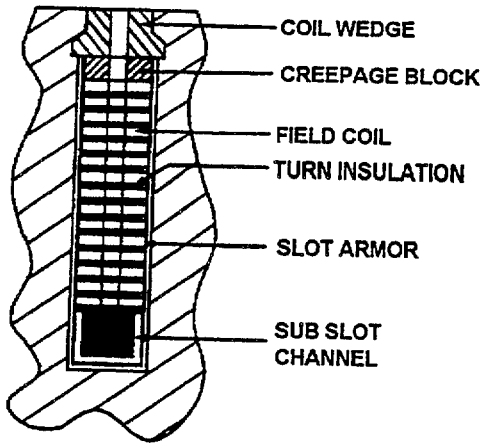

Figure 6-33 Cross-Section of Rotor Winding Slot

Rotor Design-Air Cooled Generators

The rotor is a simple single-piece forging, pedestal mounted, with tilting-pad bearings for smooth operation On smaller units, the rotor is sufficiently short that the second critical speed is above running speed, thus simplifying balance The retaining rings are nonmagnetic and have good stress corrosion resistance The retaining rings are shrunk onto the rotor body, thus eliminating any risk of top turn breakage The retaining rings are secured to the rotor body with a snap ring, a design that minimizes the stresses in the tip of the retaining ring

Radial-flow fans are mounted on the centering ring at each end of the rotor The fans provide cooling air for the stator winding and core The rotor winding, which is a directly-cooled radial flow design, is self-pumping and does not rely on the fan for air flow The overall ventilation pattern is shown in **Figure 6-34**

The rotor winding fits in a rectangular slot and is retained by a full-length wedge on the shorter machines Where cross slots are required on longer rotors, several wedges are used in each slot The rotor slot insulation, turn insulation and other materials in contact with the winding are full Class F materials

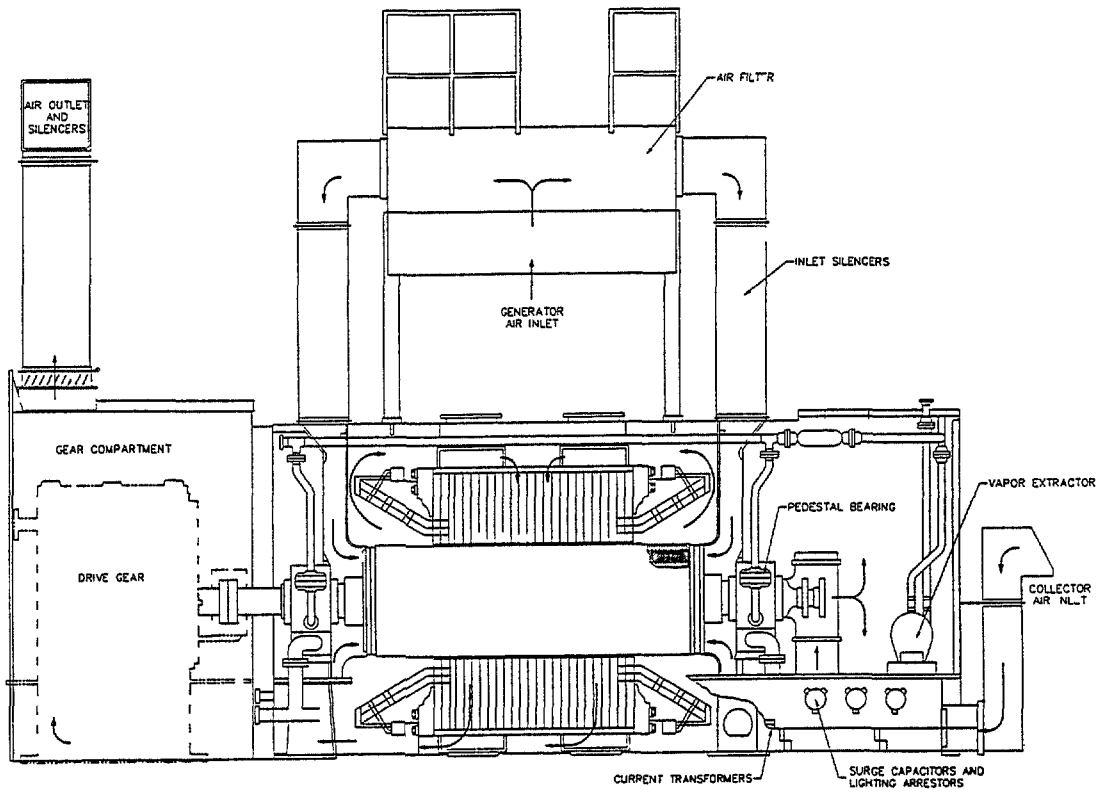

Figure 6-34 Generator Ventilation Pattern

Rotor Design - Hydrogen/Water Cooled Generators

The generator rotor contains the field windings that produce the magnetic flux, which, in turn, produces the stator current and voltage Proper cooling of the field winding is another challenge that the generator designer must overcome

All hydrogen/water-cooled generators use direct conductor cooling of the rotor winding for heat removal Smaller two-pole and all four-pole generators use the radial-flow design At the end of the rotor body, hydrogen enters the windings through full-length subslots and is discharged along the length of the rotor body through radial slots, machined or punched, in the copper conductors The hydrogen passes from the conductors through the creepage blocks and wedges to the "air gap," where the hydrogen is directed through the stator core to the hydrogen coolers

As generator ratings, and consequently rotor body length increase even further, the gap-pickup diagonal-flow cooling method is employed (**Figure 6-35**) In this scheme, cold hydrogen is scooped up in the gas gap and driven diagonally through the rotor copper to directly remove the heat At the bottom of the slot, the gas is turned and passes diagonally outward to the gas gap in a discharge stator core section The stator core ventilation is coordinated with the rotor-cooling gas flow, thus creating an in-and-out flow of hydrogen through the stator core, through the rotor, and returning to the hydrogen cooler through the core This cooling method results in a design which maintains the same average copper temperature, independent of rotor length

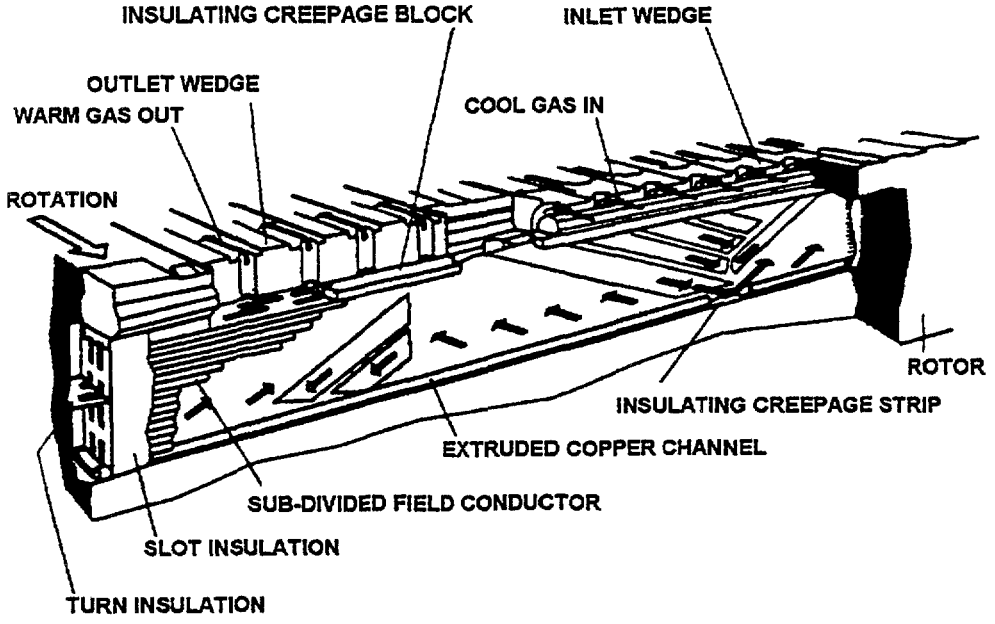

Figure 6-35 Rotor Diagonal Flow Cooling Method

There are significant challenges in producing an optimal generator rotor mechanical design The following describes some of those challenges and features that have been incorporated to meet those challenges

Rotor Mechanical Design

The generator retaining rings, which support the rotor winding end turns against centrifugal force, are the most highly stressed components of the generator On most designs, the retaining rings are shrunk on to the end of the generator body, as shown in **Figure 6-36** Locking of the retaining ring to the generator body is required to ensure the ring is not pushed off its fit surface due to the axial force generated by thermal expansion of the field winding

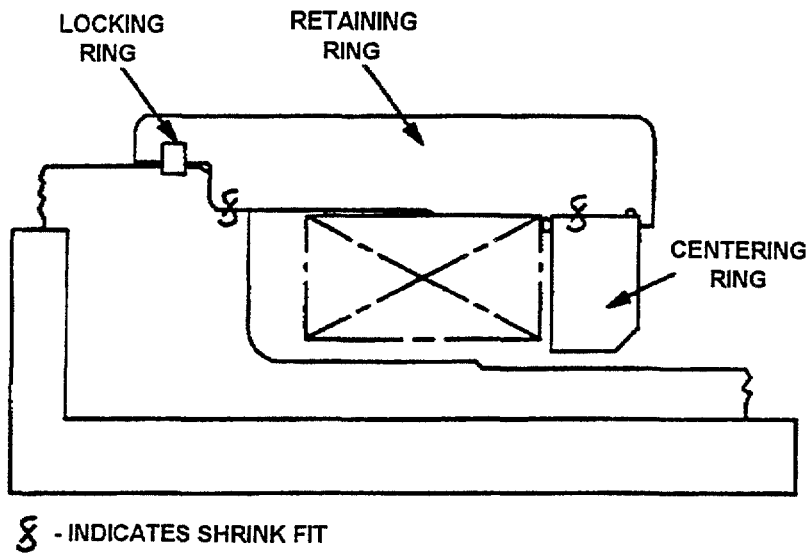

Figure 6-36 Retaining Rings Assembly

Important design requirements of retaining rings are that the rings be tolerant to high stress levels, possess adequate low-cycle fatigue capability and have acceptable separating speeds Therefore, a design is required where careful attention is paid to minimize stress concentrations Large shrink-fit interferences are required to prevent separation under overspeed conditions, which result in relatively high stress levels at standstill In most cases, the ring material must be nonmagnetic to minimize the end leakage flux and reduce heating of the core end structure

For many years, nonmagnetic retaining rings were made from an 18Mn-5Cr steel alloy However, in the mid-1970s the susceptibility of 18-5 retaining rings to stress-corrosion cracking became known As a result of cooperative programs with retaining ring suppliers, a different alloy, 18Cr-18Mn (originally proposed by GE), was selected as a better retaining ring material This material has the required properties, including high resistance to stress-corrosion cracking in the types of environments to which rings may be exposed during the service life of the generator

One of the most critical rotor manufacturing requirements, after all the parts are accurately machined and carefully assembled, is the final balance operation This ensures that the rotor vibration is within acceptable limits and that the rotor remains straight within very close tolerances at all running speeds up to and including the maximum specified overspeed

The design work initially includes the accurate calculation of all shaft stiffness and critical speeds Balancing and overspeed testing are performed in the manufacturers factory balance facility A high speed multiplane balancing procedure is used

The design of modern generators, whether they are air, hydrogen or hydrogen/water-cooled, requires a blend of time-proven, as well as innovative, design concepts This successful integration of time-proven concepts with modern technology produces generators that can be expected to provide efficient, trouble-free service through years of baseload or cycling operation

6 3 2 Excitation System

The excitation systems used for a generator driven by a combustion turbine are similar to those used by steam turbine generators Refer to Module 3 for a discussion of excitation systems

6 3 3 Hydrogen and Seal Oil Systems

The generator hydrogen system provides for cooling of the armature and generator field during operation thereby allowing an increase in generator output The seal oil system is required to prevent leakage of hydrogen from the generator casing and prevent contamination of the hydrogen The hydrogen and seal oil systems for a generator driven by a combustion turbine are similar to the hydrogen and seal oil systems describe in Module 3 for the Steam Turbine Generator

6 4 Gas Turbine Support Systems

Several support and auxiliary systems are required to ensure the safe operation of a gas turbine These include the electrical system, inlet and exhaust system, starting system, fuel and fuel treatment system, lube oil system, cooling water/air system, water/steam injection system, fire protection systems, and the turbine control system Each of these is discussed below

6 4 1 Electrical System

Gas turbines need electrical power for certain auxiliaries and support systems These include the starting system, compartment lighting, heating and cooling requirements during normal operation, and DC emergency power Electrical auxiliaries include power transformers, switchgear components, the battery which supplies DC power, and the battery charger

During normal gas turbine operation, control and power needs are furnished by the turbine-driven generator using the auxiliary electrical system components However, at the time of initial start up and during shutdown periods, standby AC power from an external source is required to maintain the gas turbine in a state of readiness

Standby AC power is required to ensure the immediate startup capability of the particular gas turbine equipment and related control systems when the start signal is given Standby power is required for the following systems

- Heating and circulating the turbine lube oil to maintain proper oil viscosity
- Control panel heating
- Generator heating
- Compartment heating and ventilation
- Battery charging
- Exhaust frame blower motor(s)
- Operation of control compartment air conditioner during periods of high ambient temperature to keep electrical equipment insulation within design limits
- Fire/smoke detectors

During gas turbine startup, auxiliary power is required for the following components

- Starting motor
- Auxiliary lube oil pump
- Auxiliary hydraulic oil pump
- Turning gear
- Ignition system
- Flame scanner system
- Booster atomizing air compressor
- Gas turbine controls
- Fuel oil forwarding pumps

Emergency power is required for the following gas turbine systems

- Control system
- Emergency lube oil pump
- DC hydraulic oil pump
- Fire protection
- Compartment lighting

A battery bank is usually provided in the gas turbine control cabinet to supply the DC power needs A battery charger is also installed for recharging the batteries by the AC power source as needed

6 4 2 Inlet and Exhaust Systems

Inlet System

Gas turbines are sensitive to inlet air quality because of inherent design and the enormous amount of air consumed Filtration is necessary to provide protection against the effects of contaminated air that may degrade gas turbine performance and life through erosion, corrosion, fouling, and plugging of cooling air passages As gas turbine technology advances and firing temperatures increase, the need for effective and reliable filtration during operation becomes even greater

The noise generated during gas turbine operation is attenuated by means of absorptive silencing material and devices built into the air inlet and exhaust sections The silencing material dissipates or reduces the acoustical energy to an acceptable level

Recent advances have led to the use of self-cleaning filters in a large number of base load, heavy duty gas turbine applications Self-cleaning inlet filters work specially well in three types of applications

- Desert regions, which typically have very high dust loading, compared to other parts of the world
- Process or base load applications where outages can be very costly, or deemed intolerable for other reasons
- Cold climates with high potential for icing, where self-cleaning filters can combine the functions of inlet filtration and anti-icing Experience has shown that self-cleaning cartridges can remove frost in much the same way that the filters can clean themselves of dust

The function of the gas turbine inlet system is to clean the atmospheric air and provide a path for ambient air flow into the gas turbine compressor Inlet compartments provide smooth and uniform flow with low aero-dynamic losses The interconnecting duct sections are fabricated from carbon steel plates to withstand up to 10 inches of suction pressure A silencer and trash screen are incorporated into the duct sections The silencer is comprised of parallel sound absorbent silencing panels typically located in the horizontal portion of the duct The panels themselves are oriented vertically, resting on edge, in order to minimize the stresses and to aid in diffusion of flow through the gas passages between the panels

A typical inlet system contains the following major components (**Figure 6-37**)

- Inlet Filter Compartment
- Inlet Ducting and Silencer
- Inlet Plenum

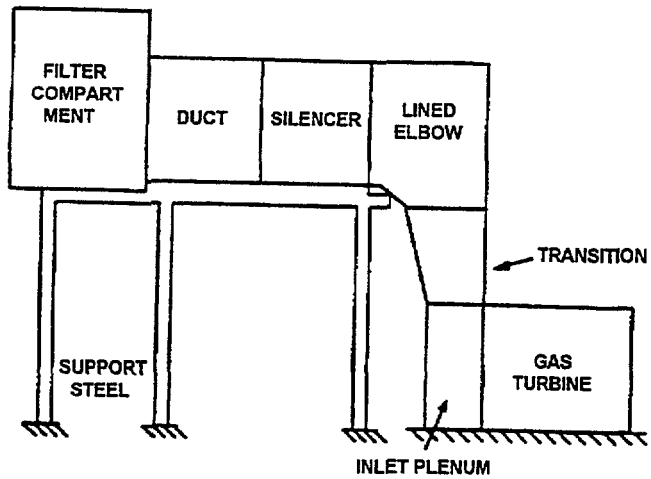

Figure 6-37 Typical Air Inlet System

Ambient air is drawn into the gas turbine inlet system through the inlet filter compartments Air filters are presently available in a variety of styles from different manufacturers The type used by GE are hollow, cylindrical, filter cartridges, mounted either vertically or horizontally in filter compartments In a typical large gas turbine installation, the inlet filter compartment may contain more than 1,000 cylindrical, cartridge-type, pleated paper filters which remove impurities from the air

Minimum filtration efficiencies of the cylindrical cartridge filter on standard test dusts are

- Standard Coarse AC Test Dust - 99 94%
- Standard Fine AC Test Dust - 99 6%

The efficiency of filtration is improved by lowering the air velocity to about 2 5 feet per minute These efficiencies, along with the positive filter seals provided by the cartridges, assure adequate protection from both air-borne sand and alkaline salt particles

A key factor to consider in inlet filter design and operation is the pressure drop caused by the restriction to air flow This pressure drop (known as the inlet loss) has an adverse impact on gas turbine performance This loss must be kept to a minimum by keeping the filters in a clean condition A self-cleaning feature is designed into the newer air filter systems to ensure that the inlet pressure drop is kept to a minimum

628

If the pressure drop across the inlet filter reaches 3 00" H_2O, an automatic filter cleaning sequence is initiated During the cleaning sequence, the filters are cleaned by a reverse jet of high pressure air from the instrument air skid A timer controls the operation of a solenoid-operated pilot air valve when the pilot valve opens High pressure air is blown on the inside of the filters, releasing the dust-caked deposits on the outside of the inlet filter compartment cleaning stops at 2 00" H_2O differential pressure To prevent the deposits from being carried into clean filters, the cleaning sequence is staggered, with no more than 10% of the elements being cleaned at a time The primary air flow to the turbine is not disturbed during cleaning

Both the air flow pattern and the specified flow rates are chosen to improve the filtration and the pulse cleaning of the filters Skirts are provided on exposed sides of the modules extending four inches below the bottom of the filter cartridges to ensure

- Protection of the filter media from physical damage
- Direction of air upward into the element area at low, controlled velocities

This design provides for low upward air velocity to the cartridges inside the skirt This combined low upward velocity and the abrupt change of direction of the flow of ambient air provides some initial separation, particularly of large particles The design also reduces the possibility that dust, pulse-cleaned from a cartridge, will be re-entrained

Since a typical filter house plenum contains over 11,000 cubic feet of air and the temporary air loss when pulse cleaning amounts to about 45 cubic feet of air, the effect of less air to the plenum, and therefore, plenum pressure, is negligible Efficient cleaning of the filter cartridges requires 80 - 120 psig airflow for 100 milliseconds

Each pulse of air from the hole in the blowpipe above the venturi nozzle provides both a shock to the filter cartridge and a momentary reverse air flow The dust particles cluster together or agglomerate on the media and form a thin cake When pulsed, these particles come off in larger pieces than when they were deposited, reducing the possibility that the particles will be re-entrained when normal flow is re-established

From the inlet filter compartment, the air flows into the inlet ducting The inlet ducting provides a path for air flow to the inlet plenum, through the silencer Air flow is directed into the silencer through a set of turning vanes located in the elbow at the lower portion of the inlet ducting The silencer contains acoustic panels which reduce the amount of noise from the gas turbine

The inlet plenum directs air flow from the inlet ducting and silencer to the gas turbine compressor The next plenum also provides a location for the settling out of air flow disturbances resulting from flow through the inlet ducting and silencer

The gas turbine inlet system shuts down the gas turbine on a high pressure drop across the inlet filters to prevent the filter from rupturing A high differential pressure alarm will activate at 6 00 ± 25" H_2O, and if the differential pressure continues to increase to 8 00 ± 25" H_2O, the gas turbine shuts down

For peaking units or in environments where the concentration of airborne contaminants or other considerations make it impractical to pulse clean inlet filters, the high-efficiency, self-cleaning type, cylindrical cartridges, may still be used Such a system can be identical in configuration to the self-cleaning compartment with the exception that the pulsing hardware is omitted This system acts as a static-barrier filter while maintaining many of the advantages of the self-cleaning system Such advantages include

- High dust holding capacity
- Positive sealing mechanism
- Inherent low velocities
- Low pressure drop

The dust holding capacity of a typical single cylindrical, self-cleaning-type cartridge filter is on the order of 2500 grams for Arizona Fine dust Dust holding capacities for high-efficiency panel filters are in the range of 400 to 700 grams of dust

Multi-stage compartments use a high-efficiency filter as a baseline element Depending on site conditions, these may be preceded by pre-filters and/or an inertial separator The high-efficiency filters are of the media type that accumulate dust and must be replaced when their pressure drop reaches a predetermined level The life of these filters can be extended by the use of the more economical disposable pre-filter

The inertial separator is recommended where there are great amounts of large material to be removed from the air Continued use of these filters beyond this condition will result in the opening of a bypass door which allows contaminated ambient air to be ingested directly into the gas turbine

Significant improvements have taken place in the design of filter compartments Standard inlet arrangements provide smooth and uniform flow, with low aerodynamic losses The system is designed to withstand a suction pressure (vacuum) of 10 inches of water Incorporated in the inlet duct are the inlet silencer and trash screen The inlet silencer is comprised of parallel sound absorbent silencing panels typically located in the horizontal portion of the duct The panels themselves are oriented vertically, resting on edge, in order to minimize stresses and to aid in diffusion of flow through the air passages between the panels The entrance edge of each baffle is rounded to reduce pressure drop, but the exit is left blunt so the flow may detach cleanly and without instability Construction of the silencers is welded to reduce the possibility of releasing loose parts to the compressor

The inlet ducting and silencer has been provided with a relative humidity sensor The operation of the relative humidity detector relies on two major elements, namely the sensor and the controller

The Sensor consists of the following components

- Infrared Light Emitting Diode
- Phototransistor
- Thermomodule
- Infrared Reflective Source
- Reflective Surface Thermistor
- Ambient Temperature Thermistor
- Sensor Housing

The sensor has an infrared light emitting diode and a phototransistor within its housing The two optical elements are focused on a reflective surface During dry conditions on the reflective surface, all of the emitted infrared energy is reflected to the phototransistor Conversely, as moisture appears on the surface, very little of the infrared energy is transmitted to the phototransistor This phenomenon serves as a means of generating a control signal that is indicative of the presence of moisture on

the surface The reflective surface is attached to the thermomodule that cools this surface until moisture deposits appear The appearance of moisture on the surface is signaled to the controller The controller then adjusts the current to the thermomodule to maintain a cyclic condition of absence and presence of moisture on the reflective surface A precision thermistor is attached to the reflecting surface, thus, the presence of moisture is the temperature of condensation or dew point

Exhaust System

The gas turbine exhaust gas leaving the diffuser enters the exhaust plenum The exhaust plenum directs the gas to the exhaust system In a simple-cycle application, the exhaust system consists of expansion joint(s), transitions duct(s), silencer(s) and the exhaust stack The simple cycle arrangement directs the exhaust gas directly to the atmosphere The exhaust system may direct the exhaust gas to process or heat recovery equipment such as a heat recovery steam generator (HRSG) Heat recovery applications may include a bypass stack with a damper system The bypass stack and damper system allows the gas turbine to operate either in the simple-cycle or heat-recovery mode

When operating in the heat-recovery mode, the heat-recovery equipment may provide all or part of the exhaust silencing required, however, an exhaust silencer is recommended when operating in the bypass (simple cycle) mode Depending upon the gas turbine frame size, the exhaust gas can exit the exhaust plenum either straight up or horizontally (side/axial) into the exhaust system Standard stack heights range from 32 feet to about 60 feet depending on the gas turbine frame size The exhaust systems are designed to meet the specific requirements of each application and include the following design features

- Low pressure drop
- Parallel-baffle absorptive silencers
- Low heat loss and exterior surface temperatures
- Safe dispersion of exhaust products into the atmosphere

A typical construction of exhaust ductwork and stack includes an internal insulation and lagging system The system includes a stiffened carbon steel outer shell, ceramic fiber high-temperature internal insulation, and stainless steel internal lagging

The gas turbine exhaust system provides a flow path for exhaust gas from the gas turbine to the HRSG and from the HRSG to the stack Expansion joints are provided in the exhaust system to compensate for the thermal expansion of the exhaust ductwork Two expansion joints are typically used in the exhaust ductwork, the first located between the aft diffuser and the exhaust diffuser duct, and the second located between the diffuser duct and the HRSG ducting

Typically, in installations with multiple GT's/HRSG's discharging into a common stack, a double louver isolation damper isolates the gas turbine and the HRSG gas path from the stack when the plant is shut down The isolation damper blades are air-foil shaped to minimize leakage loss across the isolation damper The louver damper actuator is provided with a position indicator and a handwheel for emergency manual operation in case of power failure

Double open/close limit switches are provided to indicate the fully open position of the damper, and are actuated by the blade shafts Limit switches are installed on the damper linkages farthest from the louver damper actuator One limit switch is installed on the linkage opposite the louver damper actuator, and a second limit switch is installed in the center of the louver damper arrangements

Typically, the status of each limit switch is incorporated in the start-up permissive logic and protective logic for the plant The gas turbine may not be operated unless the stack damper louver position criteria are satisfied

If two or more gas turbines discharge into a common stack, a seal air system is provided with an isolation damper that allows maintenance work to be performed in the HRSG when one of the units is "off" line The seal air system consists of a seal air fan, a seal air fan discharge valve, and a motor operator The seal air fan motor-operated discharge valve is interlocked with the seal air fan and opens when the seal air fan is in operation

Exhaust ducting pressure drop has an adverse effect on gas turbine output and efficiency Therefore it is essential to design for minimum exhaust pressure drop and maintain the HRSG gas passages in a clean condition to minimize pressure loss

Pressure switches are installed on the exhaust ducting to sense system pressure and provide alarm and shutdown signals Typically if pressure in the system rises to 16 in of H_2O, an alarm is annunciated If system pressure reaches 20 in H_2O, the gas turbine is automatically shut down

6 4 3 Starting Systems

Most gas turbine manufacturers offer a wide variety of starting systems Electric motors are generally used where a reliable source of AC power is available Diesel engines offer the advantage of being independent of a source of AC power with a slight reduction in reliability Gas expanders are used on many industrial applications where a source of high-pressure gas or steam is available Common starting devices used with aeroderivative and heavy duty industrial gas turbines are listed below

- Air Motor
- Electric Motor
- Diesel Engine
- Static Starting System

Each of these devices is discussed in the following sections

Air Motor

Air motor starting devices are typically used with small, aeroderivative gas turbines Air motors function to provide the torque required to start and accelerate the gas turbine to firing speed by converting the pressure of air or gas into kinetic energy of the gas turbine rotor After light off, the air motor continues to assist the engine until the turbine reaches the cutoff (self-sustaining) speed

A typical gas turbine air starting motor consists of three major sections the air turbine, the reduction gear train, and the clutch assembly A separate air storage system for providing a source of high pressure air to the air turbine is also required Typically the air storage system is sized to support up to three consecutive starts without the need to recharge Once depleted, the air storage system is designed to be recharged in about an hour

Electric Motor and Diesel Starting Systems

Most medium sized gas turbines use a torque converter and jaw clutch between the starting means and the accessory gear After starting the gas turbine, the jaw clutch disengages, and the torque converter uncouples from the system and is shut down

Typically the starting motor is a horizontal induction motor that drives the torque converter through a flexible disc pack style coupling The torque converter provides the required torque multiplication for the starting motor to drive the turbine

Diesel engine starting devices are typically 6, 8, 12 or 16 cylinder models equipped with independent lubricating and cooling systems Engine starting is normally provided by an electrical starting system and engine speed is controlled by a governor A torque converter is used with a diesel starting engine as well, to transmit torque to the gas turbine rotor

Static Start System

With large, front end drive gas turbines becoming more prevalent, high-powered, solid state frequency converters are being used as an alternate source of gas turbine starting power These devices provide variable frequency power directly to the generator terminals using the generator as a synchronous motor, to start the gas turbine and bring it to a self-sustaining condition A conventional turning gear is used for slow speed operation, such as cooldown and standby turning, and assists during rotor breakaway at startup to reduce the required rating of the semiconductors

The static start system has numerous advantages Elimination of the conventional starting skid allows direct access to the generator field for inspection and removal The shorter centerline length means shorter foundations, shorter overhead crane spans, smaller building lengths, reduced cable and pipe runs, and generally lower real estate requirements Lube oil system requirements are also reduced in terms of both circulation flow and heat rejection

Static start systems typically run quieter than other types of starting systems Because of the higher efficiency of the semiconductor/motor combination, starting power requirements are reduced from a conventional starting system

6 4 4 Fuel and Fuel Treatment Systems

"Fuels flexibility," the ability to burn almost any combustible fluid, has been a key advantage of the gas turbine since its introduction In recent years, the desire for fuel flexibility has resulted in utilization of many fuels, and in more numerous combinations, than the traditional gas and distillate dual fuel approach Gas turbine fuel system designs have evolved to meet these needs

Application of fuel gas systems with dual manifolds, and in some cases entirely separate fuel control systems, has extended the range of fuel use from refinery off-gases, through natural gas, to vaporized LPGs and synthetic coal gas without the need for changing equipment In the case of LPGs and similar wet fuels, maintenance of proper fuel conditions and careful purge and transfer procedures have eliminated problem areas due to condensate formation

Liquid fuels, which have been used primarily as a backup to interruptible gas supplies have included low-viscosity fuels, such as kerosene, jet fuels and naphtha, as well as, more conventional distillates Low-viscosity backup fuels have been handled with conventional fuel systems for low-time operation, and with lubricity additives for moderate usage "No" viscosity fuels such as naphtha and natural gasoline require the use of specially designed liquid fuel control systems that minimize the use of active or wearing components

Combinations of multiple gas fuels with liquid backup fuel require special consideration Liquid fuels require atomizing air which is normally routed through one of the available gas passages in the dual fuel nozzles For these systems, the different characteristics of the multiple fuel gases are brought closer to one another through the use of "steam doping" on one of the fuels

<u>Fuel Gas System</u>

Typically, natural gas is the primary fuel for gas turbine operation, and distillate fuel oil is the secondary fuel Gas turbines are also designed so that a mixture of natural gas and distillate fuel oil may be burned Gas is supplied to the gas turbine through control valves at a pressure higher than combustor pressure If gas pressure is below the required pressure, a gas compressor is needed to boost the gas pressure above combustor pressure

Fuel Gas Boost Compressor System

The gas compressor system raises the natural gas pressure to that required by the gas turbine for proper operation, removes any slugs of liquid from the gas, as well as any solid dust or dirt particles, and provides final absolute filtration of the fuel gas The fuel gas booster compressor system operates during normal combined cycle operation The gas compressor system consists of the following major components

- Inlet Pressure Regulating Valve
- Inlet Scrubber
- Centrifugal Compressor
- Gas Aftercooler
- Gas Recirculation System
- Main AC Lubricating Oil Pump and Motor
- Auxiliary Post Lubricating Oil Pump
- Compressor Motor
- Duplex Lubricating Oil Filter
- Control System

The inlet pressure regulating valve limits the compressor inlet pressure if required The inlet scrubber removes any slugs of liquid in the gas as well as any solid dust or dirt particles The scrubber is a dry type with multiple small cyclones mounted within the scrubber vessel The motor-driven centrifugal compressor compresses the gas to the required pressure Oil lubricates and cools the compressor bearings The compressor gas discharges to a water cooled aftercooler and receiver The final absolute filter separator is a coalescing type with a separation section and many small tubular fiberglass filter pack final separation elements The lubricating oil is cooled, filtered, and pumped back to the compressor A backup DC-driven lubricating oil pump is provided for emergency backup to the main AC-driven lubricating oil pump The backup lubricating pump will run during an emergency coastdown of the compressor Lubricating oil heaters are provided to keep the lubricating oil warm

The water-cooled aftercooler cools the gas and is required during recirculation of the gas when the gas compressor is started The recirculation system in conjunction with the receiver allows the gas turbine startup gas flow transient requirements to be met Small/slow changes in gas flow requirements and inlet pressure variations are also handled by the compressor inlet guide vanes Pressure and temperature

instruments are provided to monitor the system operation A final absolute filter separator is provided to assure no oil or liquids can be carried over to the gas turbine

Relief valves are provided to protect the various system components from overpressure Automatic level control systems on the scrubber and final absolute filter separator, consisting of level controllers and drain valves, discharge contaminants via a common discharge header to the scrubber drains tank

The compressor package is typically skid-mounted and fully automated A local control panel with start-stop buttons, annunciator and trip indicators, critical pressure, temperature and differential pressure indications are provided Instrument air is used to operate the system control valves

Fuel Gas Flow Meter

The fuel gas metering tube measures the flow of gas to the gas turbine and operates during normal simple and combined cycle gas turbine operation

Scrubber Drains Tank

The scrubber drains tank operates during normal combined cycle gas turbine operation The tank is vented to atmosphere and collects wastes from the gas compressor When the tank approaches full, it must be drained to a portable vessel for disposal A gage indicates tank level

On-Base Fuel Gas System

Fuel gas flows from the compressor to an aftercooler where it is cooled by heat rejection to cooling water After the cooler, the gas passes through a final separator, fuel gas metering tube, a Y-type strainer, the gas control valves (stop/ratio valve) and the fuel gas flow control valve located in the lube oil module The fuel gas flow control valve provides a controlled flow to the gas manifold serving 14 gas turbine combustion chambers On turbine trip, the gas control valves (stop/ratio) provide quick shutoff of fuel supply, **Figure 6-38**

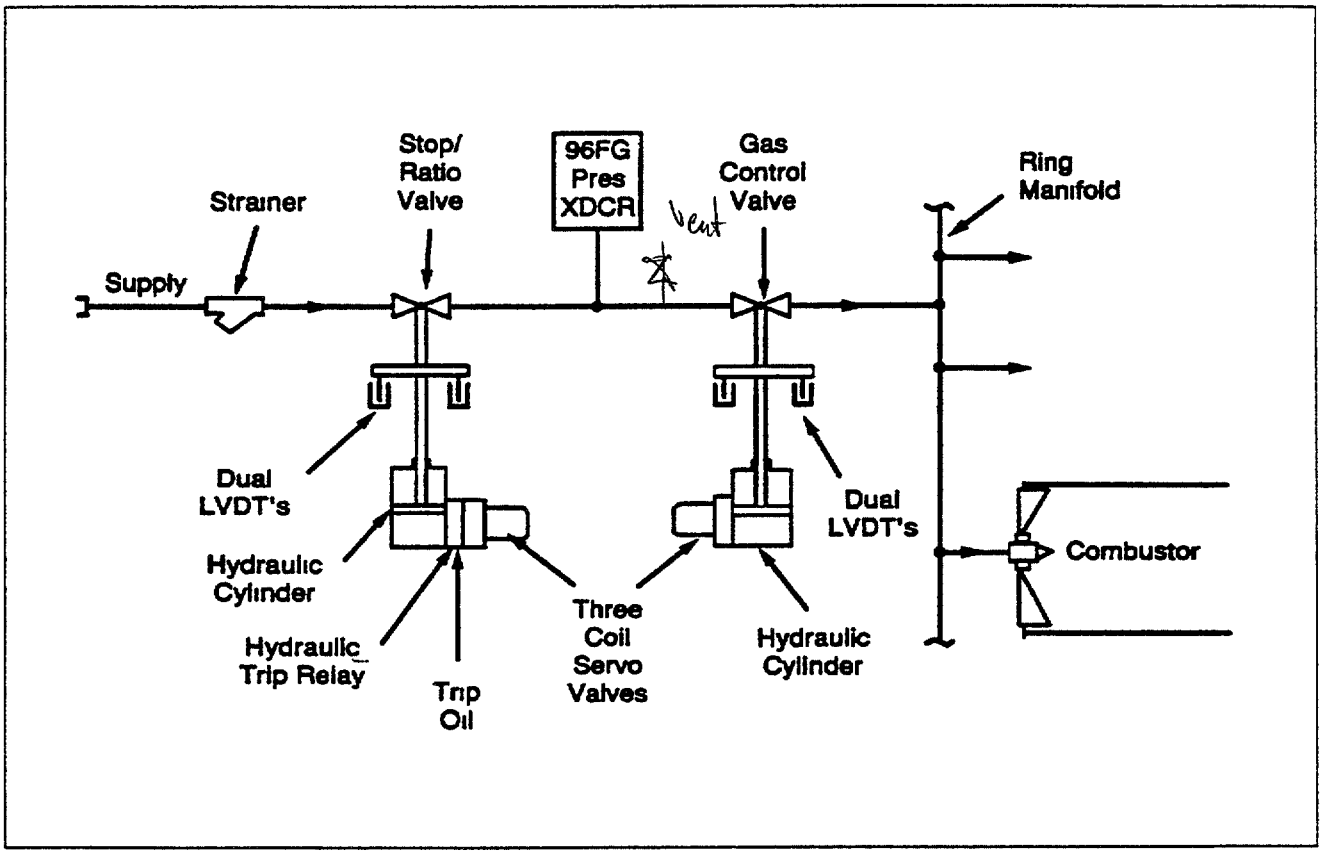

Figure 6-38 Fuel Gas System

The stop/ratio valve acts to control inlet pressure to the fuel gas flow control valve The fuel gas flow control valve meters fuel flow to the combustion system in response to the signals generated by the control system The stop/ratio valves act as quick shut-off valves to trip the fuel supply to the combustion chamber

The stop/ratio and gas control valves are actuated by electro-hydraulic servo-valves Control oil for the stop/ratio and gas flow control valve actuators is provided from the lube oil system A hydro-mechanical trip relay for the stop/ratio valve actuator and for the gas flow control valve modulates the action of the valves When the relays are in the tripped position, one end of the cylinder is opened to drain allowing the spring to shut off the gas fuel flow Low pressure trip oil and a solenoid-actuated trip valve operate the relays

A solenoid-operated valve located between the stop/ratio valve and the control valve opens to vent the fuel gas to atmosphere when the turbine trips and the valves close When the turbine is shut down, the vent valve will also actuate if fuel gas leaks past the stop/ratio valve

Fuel gas pressure is indicated locally at the gas control valves by pressure indicators From the gas control valve fuel gas flows into the fuel gas supply manifold which distributes the gas into the combustion chambers Each chamber has multiple fuel nozzles which act as metering elements to control the flow of gas to each combustor The fuel gas flow rate determines the load carried by the turbine

Liquid-Fuel Systems

Currently available heavy-duty gas turbines are capable of burning a variety of liquid fuels, from petroleum naphthas to residuals These fuels vary substantially in hydrocarbon composition, physical properties and levels of contaminants A series of evolutionary changes to the high-pressure fuel pump and flow divider designs have substantially improved the reliability of these critical fuel components While reasonable reliability of these components had been demonstrated on clean distillate fuels, it became necessary to incorporate several design changes to accommodate the dirty distillates and heavy fuels that are available to customers on a worldwide basis Design changes were necessary to accommodate corrosive elements in the fuel and the effects of thermal transients as transfers were made from distillate to heavy fuel These improvements included switching to internal materials which were resistant to the corrosive attack of the fuel and the effects of thermal transients, increased clearances and external lubrication of bearings

Flow dividers on crude-burning large gas turbine units in Saudi Arabia have now demonstrated an ability to operate in excess of 30,000 hours between maintenance intervals, with additional improvements in life expectancy currently in process Fuel pump design improvements have also increased the life expectancy to over 20,000 hours between maintenance intervals

Fuel Oil System

Fuel oil is typically the secondary fuel and the gas turbine is equipped for automatic change-over from gas to fuel oil The gas turbine can also be operated with both fuels simultaneously

The fuel oil system consists of a delivery system which may be a truck or barge unloading connection, a fuel oil storage tank, a fuel oil forwarding skid, a gas turbine fuel oil module, and the on-base gas turbine fuel equipment, **Figure 6-39**

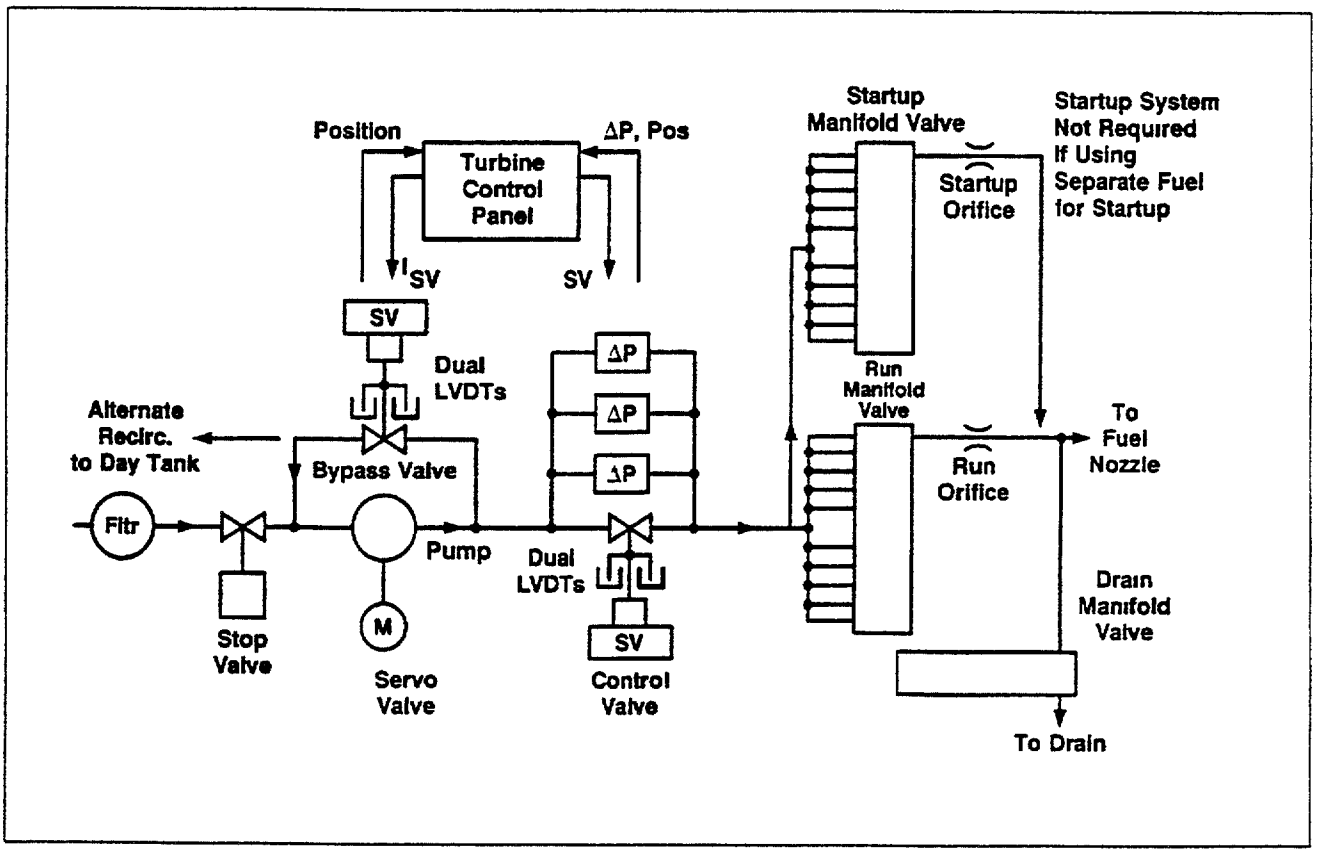

Figure 6-39 Fuel Oil System

Fuel oil is unloaded from trucks, barges etc at the unloading dock The barges are equipped with their own unloading pumps and hoses The hose is bolted to the flanged connection at the dock end of the piping leading into the fuel tank The pipeline is equipped with manually operated valves, which must be opened to allow fuel oil to flow into the tank One of these valves is a quick closing valve for shutting off rapidly in the event there is a leak in the system In addition to the quick closing valve, the tank has a 2" vent at the highest elevation of the fill line, which acts as an anti-siphon device to prevent the fuel from siphoning out of storage tank in the event of a fill hose break A relief valve installed on the fill-line to the tank is provided to protect the piping from over pressurization An inlet diffuser is provided on the tank end of this fill pipe to minimize the fuel oil velocity disturbance on the fuel oil tank proper

The tank receives fuel from the barges and stores it for use by the gas turbine Fuel oil is directed from the tank through a floating suction assembly and through piping equipped with a manual valve to the fuel oil forwarding skid

The floating suction assembly provides a method of using the fuel oil from the highest usable portion of the tank and not from the bottom of the tank where the water and sludge have settled out The floating suction pipe is hinged and allows the tank to be emptied down to a minimum level The tank is fitted with a gauge board to indicate fuel oil level and a water level test connection The fuel oil tank is equipped with piping and a manual drain valve to allow removal of water and sludge from the tank bottom Manual test valves are provided at two locations to determine the presence of water Samples should be collected into a bucket and visually inspected for possible water content This test procedure should be repeated periodically

Water should be removed from the tank when water is present in the test sample The sample connection point inside the tank is 2" above the tank bottom A truck with a pump should be connected to the drain piping and valve opened allowing water from the tank draw-off connection to be pumped/drained into the truck The draw-off connection point inside the tank is 1" above the tank bottom If the fuel oil level in the tank is inadequate to drain into the truck, the truck's pump should be used to pump the water into the truck The water should be removed from the tank until water is no longer present in the test sample

Tank drainage will contain fuel oil and water, and must be disposed of properly A sump collects drains from a low point drain connection on the barge unloading discharge piping into the fuel oil storage tank

Fuel Oil Forwarding Skid

The fuel oil forwarding system is a factory assembled pumping unit The fuel oil forwarding system is used to transfer the fuel oil from the above ground storage tank to the gas turbine fuel oil module This is done at the pressure and flow rate required by the turbine fuel oil system All components of the system are mounted on a separate platform, referred to as a fuel oil forwarding skid

The system includes a Y-type strainer with cleanout drain to remove dirt particles from the fuel oil before it reaches the fuel oil forwarding pumps The Y-strainer is equipped with a differential pressure switch that will annunciate an alarm when differential pressure increases to a high level setpoint Two (2) AC motor driven fuel oil forwarding pumps are provided Using the selector switches mounted on the door of the MCC starter, the "Remote" mode of operation is normally selected to permit pump operation from the GT control panel One is selected as the lead pump to supply fuel oil for normal start and operation of the gas turbine and the second pump is selected as the standby pump

In the event of a failure of the lead pump, a pressure switch senses a drop in fuel oil pressure and automatically starts the standby pump Check valves in the discharge piping of the pumps prevent reverse flow during operation A pump recirculation line with orifice is provided

A pressure regulating valve is used to maintain the fuel oil pressure at the skid discharge connection within the limits required for the main fuel oil pump and the fuel oil system on the fuel oil module A normally closed solenoid stop valve is installed at the outlet connection of the fuel oil forwarding skid The solenoid valve operates in conjunction with the on-base fuel oil stop valve to shut off the fuel flow when the turbine is shut down A flowmeter is installed in the fuel oil forwarding skid piping and is connected to a fuel oil flow totalizer for control and indication purposes

As a part of the Fuel Oil Forwarding Skid, four heat detectors are provided, located at four different zones

Special contact sockets are provided for these detectors An open contact on any of these detectors will result in an alarm If two contacts are open on any of these detectors, due to a fire or excessive smoke, the following will occur

- The fuel oil forwarding pump trips
- The solenoid operated stop valve closes
- The gas turbine automatically shuts down

Gas Turbine Fuel Oil Module,

Fuel oil supplied to the fuel oil module enters one of the duplex low pressure filters before entering the fuel oil pumps The fuel oil supply line to the gas turbine fuel oil module may have a fuel oil heater installed to maintain the correct temperature and viscosity

The low pressure filter typically consists of a five micron pleated-paper element These filters retain contaminants, preventing possible damage or improper functioning, and extending the life of downstream components A differential pressure switch provides a signal when the pressure differential across the filter reaches the high level setpoint The fuel oil flow may be transferred to the clean filter by operating the manual transfer valve The dirty filter may then be serviced with clean filter elements without shutting down the gas turbine

The fuel oil pumps are axial flow, positive displacement, rotary, screw type pumps A single ball bearing positions the power rotor for proper operation of the mechanical seal The bearing is permanently grease packed and external to the pumped fuel oil A typical fuel oil pump arrangement uses three pumps

One fuel oil pump will sustain full speed, no-load operation Two fuel oil pumps are required for full load The third fuel oil pump is a standby A check valve in the discharge piping of each pump prevents back pressure to the non-operating pump One pump motor is energized from each of the two (2) separate MCC's The third pump motor may be energized from a starter on either of the MCC's, interlocked such that only one starter may be energized at a time During normal operation, when two (2) pumps are required, a configuration shall be used so that one operating pump is energized by each MCC

The pumps are protected from insufficient suction pressure by a permissive to start pressure switch During normal operation, this switch functions as a low-pressure alarm The fuel oil system is protected from excessive pressure by pump discharge relief valves which relieve excessive pressure back to pump suction

Fuel oil is discharged through one of two duplex high pressure filters The filters provide protection for the flow divider Filtration efficiency, differential pressure switch operation, and transfer valve operation are identical to that of the low pressure filters

Pump discharge flow is modulated by a servo-controlled three-way control valve assembly The valve controls flow to the turbine by throttling the main port while opening the bypass port, returning the bypass flow to pump suction

A hydraulically operated three-way fuel oil stop valve shuts off the supply of fuel oil to the turbine during normal or emergency shutdowns During normal turbine operation, the valve is held open (bypass closed) by high pressure hydraulic oil that passes through a hydraulic trip relay (dump) valve This dump valve, located between the hydraulic supply and the stop valve hydraulic cylinder, is hydraulically operated by trip oil acting through a solenoid valve During a normal shutdown or emergency trip, low trip oil pressure causes the valve to shift position, dumping high pressure hydraulic oil from the stop valve actuating cylinder The dumping of oil allows spring pressure to close the stop valve During an electrical trip, the solenoid valve causes the dump valve to shift with the same results The stop valve is fully closed within 0 5 seconds of the trip signal A limit switch signals stop valve position

A flow divider equally distributes filtered fuel oil to the gas turbine combustors The flow divider is a continuous flow, free-wheeling device consisting of several gear pump elements in a circular arrangement The gear pumping elements have a common inlet with a single timing gear The timing (sun) gear maintains the speed of each pumping element synchronous with all the other elements

The speed of each flow divider gear element is directly proportional to the total flow through the flow divider Magnetic pickup assemblies, fitted to the flow divider, produce a flow feedback signal at a frequency proportional to the fuel oil delivered to the combustion chambers This signal is fed to the gas turbine control system for control

645

A nozzle isolation valve is mated to the flow divider and houses a poppet for each of the outlets These poppets isolate the fuel oil nozzles during shutdown periods to prevent line drainage The poppets are hydraulically opened by a single piston, controlled by the same circuit as the fuel oil stop valve When hydraulic pressure is relieved, the poppets are closed by spring pressure There is a separate spring for each poppet

A multi position pressure selector switch is mated to the nozzle isolation valve and is part of the flow divider assembly It allows monitoring of individually selected line pressures on a local gage These include any one of the combustor fuel oil lines, pump discharge pressure, and flow divider inlet pressure

In the event of an unsuccessful start, the accumulation of combustible fuel oil is drained through false start drain valves provided at appropriate low points in the combustion/turbine/exhaust area These normally open valves close as the turbine accelerates during startup Air pressure from the discharge of the unit's axial flow compressor is used to actuate the valves During turbine shutdown, the valves open as compressor speed (and discharge pressure) is reduced

Fuel Treatment Systems

In the case of a true light distillate oil, treatment is required to capture dirt and shipment contaminants that have not been removed by the storage tank settling system arrangement Undetected and untreated, a single shipment of contaminated fuel can cause substantial damage to the gas turbine Filters are the most commonly used device, although centrifuges and electrostatic desalters may also be required to remove sodium that may be present because of sea water contamination

Ash-forming liquid fuels are normally heavier oils, such as blends, crudes and residual oils Since they usually contain trace metal contaminants, fuel treatment is required to remove or modify the effects of harmful constituents prior to combustion in the turbine The degree of equipment sophistication, plant equipment investment, and operating costs required for this treatment are tied directly to key physical and chemical properties of the fuel Physically, the parameters of interest include specific gravity, viscosity, flash point, pour point and wax content Chemically, the prime interests are the amounts of corrosive trace metals present, the overall fuel washability and the compatibility of one fuel with another The latter is particularly significant for

users who obtain fuel from multiple sources Treatment and conditioning systems for ash-forming fuels are more complex than for distillates because of the processing steps required to remove or control their characteristic trace metal contaminants Particular attention must be paid to sodium and vanadium Complete fuel treatment includes

- Washing the fuel to remove the water soluble trace metals such as sodium, potassium and certain calcium compounds Washing also removes much of the inorganic particulate material that is normally forwarded to the filtering systems Washing involves the addition of water to the fuel and subsequent removal of the contaminant-laden water Under special circumstances, it may be possible to remove the water already present in the raw fuel, without adding more water, and obtain adequate removal of contaminants This special process is called "purification" and is frequently applied to crude oils

- Filtering the fuel to remove solid oxides, silicates and related compounds that are not adequately removed prior to forwarding to the gas turbine These particles can clog fuel pumps, flow dividers and fuel nozzles

- Inhibiting the vanadium in the fuel with magnesium compounds in a ratio of three parts of magnesium, by weight, to each part of vanadium This form of treatment inhibits the corrosive characteristics of vanadium by forming high melting temperature ash composed of magnesium sulfate, magnesium oxide and magnesium vanidates It should be noted that lead is also corrosive to turbine components and should be avoided

Figure 6-40 shows the major components that make up the heavy-fuel treatment system There is no one base fuel treatment system suitable for all applications The optimum approach results from an evaluation of operational requirements for the gas turbine, the expected fuel characteristics, the desired maintenance frequency, the choice of equipment, the choice of additive, and the desired system flexibility

647

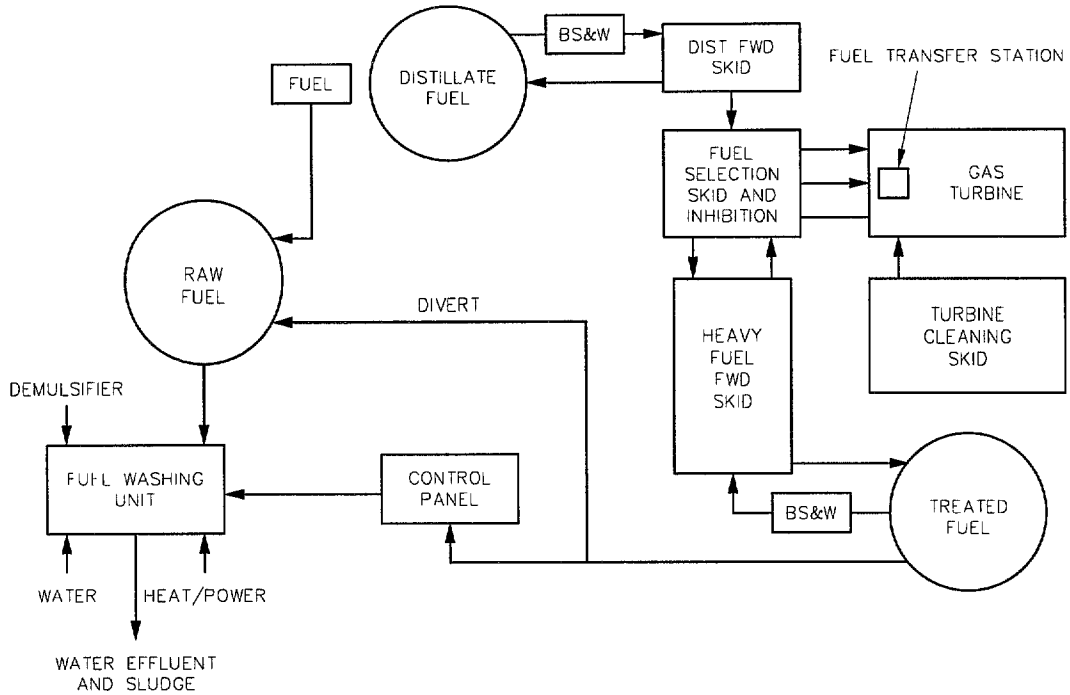

Figure 6-40 Heavy Fuel Oil Treatment System

6 4 5 Lubricating Oil System

Many significant changes have taken place in gas turbine lubricating oil system designs over the past decade Duplex filtration is utilized on all low-pressure filters to allow for filter maintenance while the unit is operating Stainless steel piping is included on all systems downstream of the low-pressure filters

Improved bearing sealing air systems have substantially increased the lubricating oil life with over 20,000 hours between changes expected for most environments Improvements in the factory flushing procedures and system cleanliness techniques have taken place which have improved bearing, gear, servo-valve and other component lives

Standardization of accessory bases also provides important benefits in manufacturing and operation This base includes centrifuge connections, a sight glass along with the previously used level gauge, and location of the pressure regulating valve and the pump relief valve external to the tank

Typical gas turbine lubricating oil systems vent through a mist eliminator This consists of a vessel containing coalescing filters, "candles," through which the air-oil mixture is drawn by a motor-driven fan The oil collects on the filters and returns to the tank The fan overcomes the pressure drop caused by the filters and maintains a slightly less than ambient pressure in the oil tank Improvements in the design of this equipment include the use of a high-efficiency, two-stage coalescing filter

The lubricating oil module is a package system consisting of pumps, tanks, heaters, coolers, filters, piping and controls that provide lubricating oil to various gas turbine components, **Figure 6-41** Lubricating oil is supplied to the gas turbine starting system, gas turbine generator and seal oil skid, gas turbine bearing, and the atomizing air skid Lubricating oil is returned from each user to the lubricating oil module A typical on-base gas turbine lube oil system for a GE Frame 7F gas turbine is described below

Main Components

The lube oil system consists of the following components

- Lube oil reservoir
- DC Motor Driven Emergency Lube Oil Pump
- AC/DC Motor Driven Emergency Seal Oil Pump
- Auxiliary Lube Oil Pump
- Lube Oil Heat Exchangers
- Lube Oil Filters
- Bearing Header Pressure Control Valve
- Lube Oil Mist Eliminator/Extractor

The lube oil system is a packaged, forced feed lubrication system The lubricating oil system provides the required quantity of oil at the correct pressure and temperature to the gas turbine and generator Lube oil is also provided to the seal oil skid, atomizing air skid, and EHC supply manifolds

697

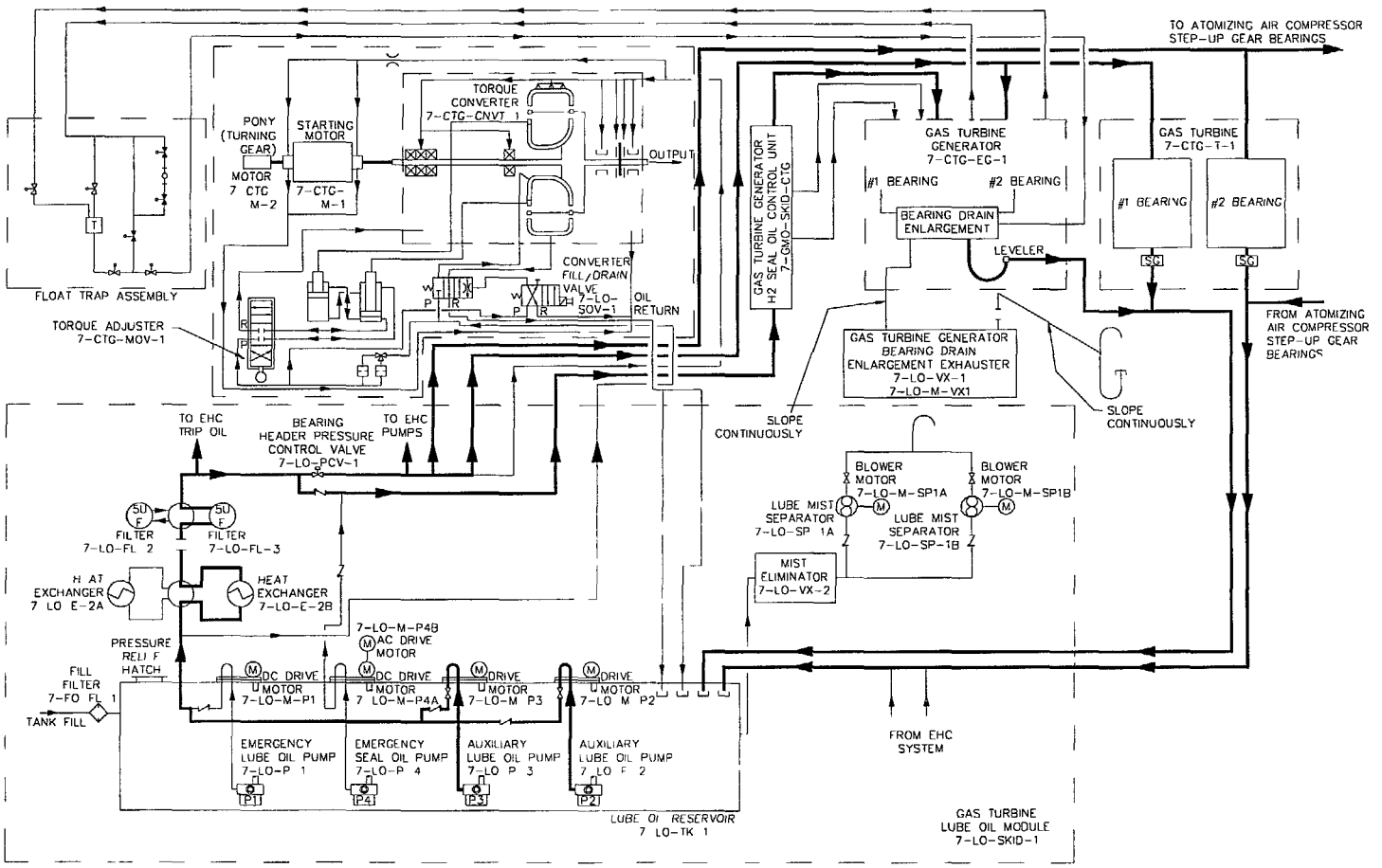

Figure 6-41 Gas Turbine Lube Oil System

Lube oil is pumped from the lube oil reservoir by one of two AC motor driven pumps During gas turbine startup, both pumps are in service At approximately 95% turbine speed, the lag lubricating oil pump automatically shuts down The lube oil pumps discharge to one of two parallel shell and tube heat exchangers, where the lube oil is cooled before flowing to the system components The lube oil exits the heat exchangers and flows through lube oil filters The lube oil filters remove any foreign material from the oil to prevent damage to downstream components The filters have replaceable cartridge elements that are replaced on increasing differential pressure The lube oil exits the filters and flows to the lube oil supply header

From the lube oil header, oil flows to the turbine bearings, generator bearings, atomizing air skid, and the EHC hydraulic supply manifolds Bearing header pressure is controlled by a pressure control valve Pressure switches mounted upstream of the valve initiate an alarm and provide input to automatically start the lag lube oil pump on decreasing system pressure

Lube oil is supplied to the seal oil system and the EHC control oil system from upstream of the pressure control valve A maximum lube oil viscosity of 800 SUS is specified for control system operation and bearing lubrication prior to gas turbine startup If the viscosity increases above 800 SUS, gas turbine startup is inhibited by the control system If bearing header temperature exceeds 165°F, an alarm is initiated, and the gas turbine is tripped if the temperature reaches 175°F

Seal oil to the generator seals is normally supplied by the lube oil system In case of a lube oil system failure or shutdown, a separate seal oil pump provides seal oil to seal the hydrogen in the generator Check valves are located in the normal lube oil supply line and the seal oil pump discharge line to prevent the lube oil or seal oil from the operating pump from flowing through the standby pump The seal oil pump is normally activated by a decreasing pressure differential across the generator seals

6 4 6 Cooling Water/Air Systems

Several gas turbine power plant accessory systems require a source of external cooling These include the lubricating oil, starting system, atomizing air, load equipment, and turbine support legs Cooling water is usually provided as a heat sink for each of these systems The water is then cooled by either an open system cooling tower or an industrial-type water-to-air heat exchanger operating in a closed loop The

651

industrial-type heat exchanger features a horizontally-oriented bank of finned tubes with large diameter fans that move air vertically across the tubes Induced-draft and forced-draft designs are used depending on the application requirements Redundant motor-driven water pumps are provided for reliability purposes The use of water as the cooling medium mixed with ethylene glycol is ideally suited for low ambient areas An oil-to-air heat-exchanger may be a more practical approach in some environments and is available on an optional basis Duplex oil-to-water heat exchangers are provided as a standard to allow continuous operation while performing maintenance on the heat exchangers

Cooling/Sealing Air System

The cooling/sealing air system for a GE 7F heavy duty industrial gas turbine consists of four subsystems

- Compressor Bleed Subsystem
- Turbine Nozzle Cooling Air Subsystem
- Exhaust Frame Cooling Subsystem
- Exhaust Temperature Reference Bias Subsystem

The operation of each subsystem is described below

Compressor Bleed Subsystem

The compressor bleed subsystem provides compressor pulsation protection during gas turbine start-up, acceleration, deceleration and shut-down, **Figure 6-42** To prevent compressor surge (pulsation), air is extracted from the fifth and thirteenth stages of the compressor through two sets (four total) of air extraction valves The extracted air flows into the gas turbine exhaust plenum to prevent compressor pulsations

During normal operation, each air extraction valve is closed by actuating air pressure exerted on its operating piston Actuating air pressure is supplied from the compressor discharge through a porous filter The porous filter has a continuous blowdown orifice and two solenoid valves The solenoid valves are energized to maintain actuating air pressure on the air extraction valves, keeping them closed, when the gas turbine is operating at full speed

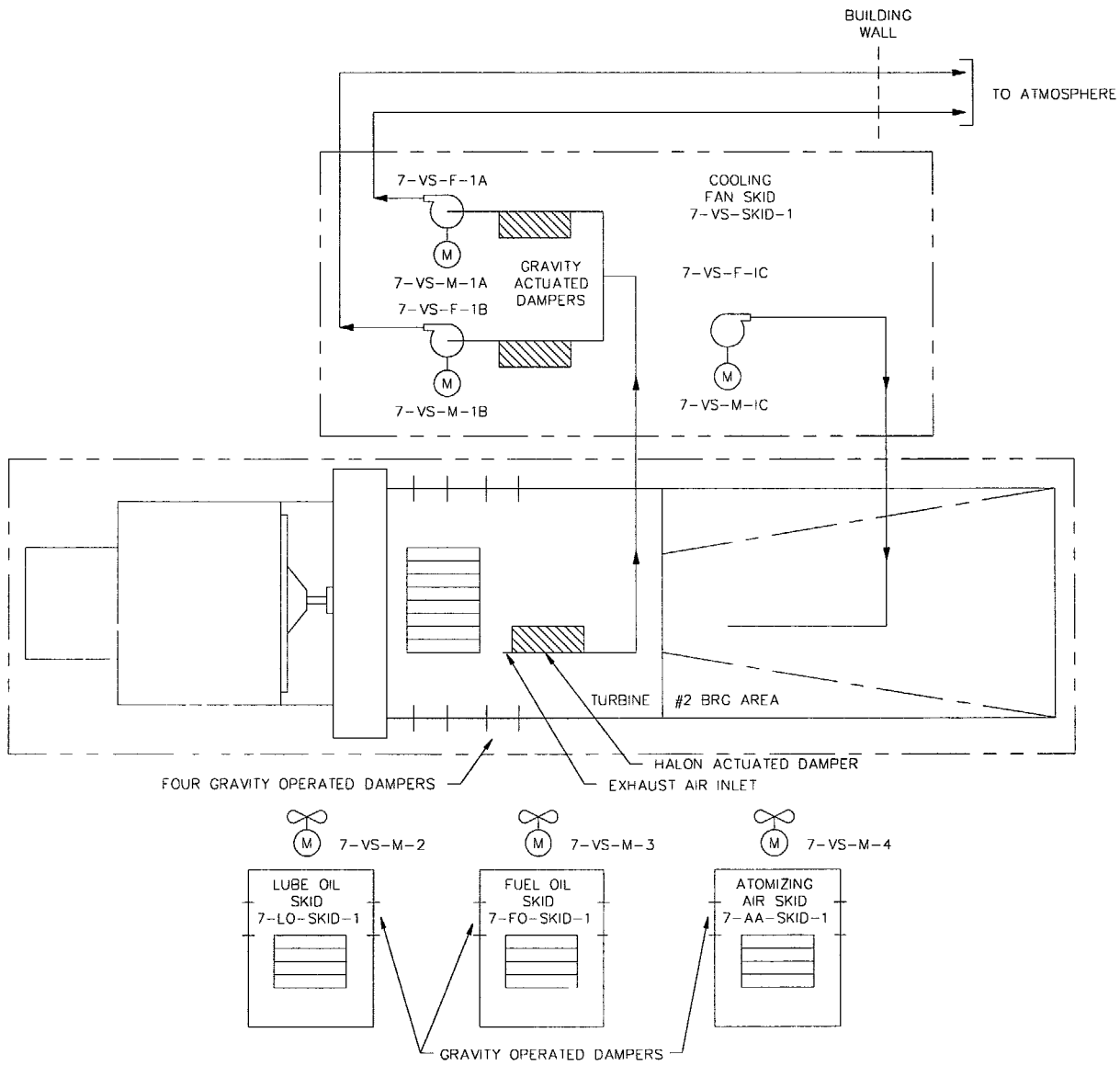

Figure 6-42 Compressor Bleed Sub-System

During gas turbine start-up, acceleration, deceleration and shutdown, the solenoid valves are de-energized to open the air extraction valves Opening the air extraction valves allows air to flow from the fifth and thirteenth stages of the compressor to the exhaust plenum Limit switches on the air extraction valves provide permissive logic to ensure the valves are open before turbine start-up Orifices are provided to maintain the correct extraction air flow

Compressor discharge air is also used to supply atomizing air, fuel purge air and performance monitoring air

Turbine Nozzle Cooling Air Supply Subsystem

The turbine nozzle cooling air subsystem consists of two circuits One circuit is internal to the gas turbine, the other circuit is external The internal circuit cools the turbine first stage buckets, second stage buckets, first stage nozzle and shroud The external circuit cools the turbine second and third stage nozzles

The internal cooling air circuit is supplied by the compressor seventeenth stage and the compressor discharge air The first stage nozzle and shroud are cooled by air flowing into the turbine from the compressor discharge plenum The turbine first and second stage buckets are cooled by air flowing radially inward at the seventeenth stage compressor wheel, through holes drilled axially through the distance piece The cooling air then flows over the forward face of the first stage turbine wheel into the first stage turbine wheel bore, into the chamber between the first and second stage wheels, and finally to the root of the first and second stage buckets

The external cooling air circuit is supplied by air extracted from the compressor thirteenth stage From the thirteenth stage cooling air is piped to the turbine shell for cooling the second and third stage nozzles, and wheelspaces

A 20-mesh Y-strainer is installed in each of the two air lines supplying the turbine second stage nozzle Orifices split the flow between the second and third stages The Y-strainers prevent clogging of the cooling holes in the turbine second stage vanes A differential pressure switch is installed around each Y-strainer to detect strainer clogging

Exhaust Frame Cooling Subsystem

The exhaust frame cooling subsystem provides air for cooling the turbine exhaust frame Cooling air is supplied by two skid-mounted centrifugal blowers From each blower, air flows through a check valve to the turbine exhaust frame The cooling air enters the exhaust frame through eight radial nozzles

The air cools the outer diameter of the exhaust gas-path insulation pack Some of the cooling air then exits the frame at the forward circumferential joint near the third stage bucket shrouds The remainder of the air flows radially inward and cools the support struts and the inner diameter of the exhaust gas-path insulation pack, then exits the exhaust frame, cooling the third aft wheelspace

During normal operation, the two centrifugal blowers operate in parallel A pressure switch is located at the discharge of each blower to detect blower failure The system can operate for limited periods of time with only one blower operational

Exhaust Temperature Reference Bias Subsystem

The exhaust temperature reference bias subsystem provides input to the turbine control system for calculation of gas turbine firing temperature The input provided by the cooling/sealing air system is compressor discharge pressure and average turbine exhaust temperature Turbine exhaust temperature is measured by thermocouples Compressor discharge pressure is measured by a pressure transducer located on the lubricating oil skid

6 4 7 Water Wash System

Most of the major gas turbine manufacturers have designed totally-automated water wash systems which improve cleaning effectiveness and minimize machine down-time Automated water wash systems have been built for both on-line and off-line operation Routine on-line water washing allows operators to reduce the frequency of off-line washing and associated machine downtime, thereby increasing unit availability (**Figure 6-43**) Although the use of water-only is normally recommended for on-line washing operations, the use of detergent during on-line washing can improve the washing effectiveness in severe operating environments **Figure 6-44** illustrates the effect of frequent on-line washing and periodic "crank" washing in restoring efficiency losses

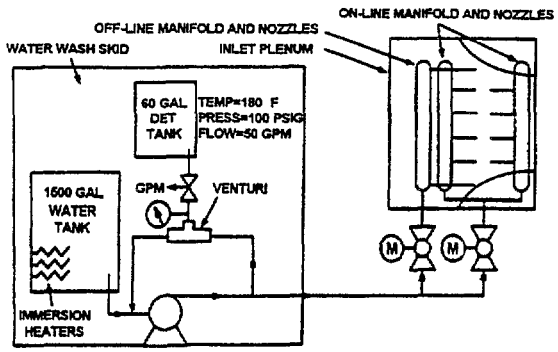

Figure 6-43 Water-Wash System

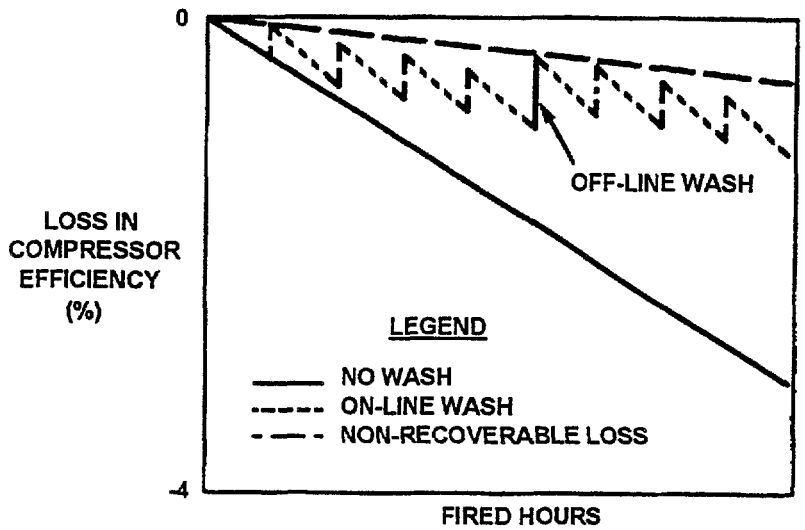

Figure 6-44 Effect of Water Washing on Turbine Efficiency

Current water wash systems automatically preheat the water, mix it with detergent in the proper ratio, inject it into the compressor or turbine, and then provide rinse water for an appropriate length of time Gas turbine manufacturers have also designed portable automated water wash systems for servicing turbines with a remote source of potable water, and automated nutshell injection systems for customers with heavy fuel applications that allow for on-line performance recovery

6 4 8 Water/Steam Injection System

Water Injection Systems

Environmental concerns surrounding the emission of nitrous oxides (NO_x) from the gas turbine exhaust have placed a major emphasis on the design of water-injection skids over the last several years In order to control these emissions, demineralized/deionized water is injected directly into the combustion zones of the gas turbine thereby influencing the chemical reaction of the combustion process Self-contained water-injection skids are utilized to transport the water from a storage facility and deliver the water at the proper pressure and flow rate to the gas turbine as load, ambient temperature, and emission levels vary, **Figure 6-45**

A series of evolutionary changes to the water-injection skid design have substantially improved the reliability of these systems These improvements included switching to pipe and valve materials which are resistant to the corrosive attack of the demineralized/deionized water Present day water-injection skids use stainless steel pipe (usually AISI 304L), stainless steel valve bodies (usually AISI 316L) and internals, and stainless steel flanges and fittings to prevent corrosion In addition, the high-pressure, centrifugal water-forwarding pump assembly is constructed of stainless steel (usually AISI 316L)

Operating reliability of the single-stage, high-pressure, water-forwarding pump/motor assembly has been improved through the use of a "self-contained" pump operating system This pump/motor combination is typically a vertical assembly consisting of the pump with a gearbox mounted over it and finally with the pump motor mounted over the gearbox This "self-contained" assembly provides its own cooling, filtering, and pressurizing of the gearbox lubricating oil, thereby making it independent of any outside system

Optionally, dual 100% capacity water-forwarding pump/motor assemblies as well as duplex high-pressure water filters with a manual transfer valve are available which will allow for maintenance while the unit is operating, thereby improving the MTBF

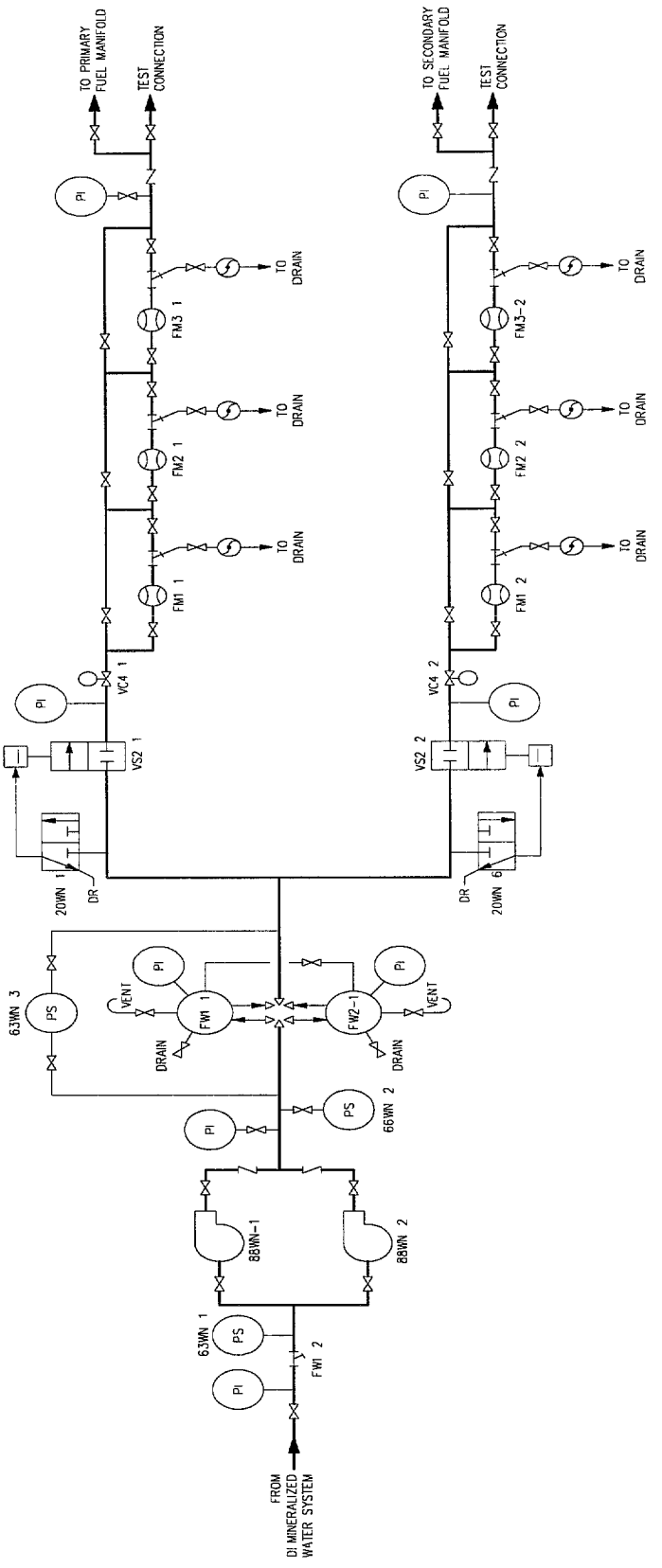

Figure 6-45 Water Injection System

658

Design efforts are currently underway which are aimed at eliminating the constant-speed pump drive motor and gearbox assembly and replacing these two components with a variable-frequency drive (VFD) system which consists of a variable--speed motor and a frequency controller This change will eliminate the pump gearbox assembly and the need for a flow control valve and differential pressure regulator presently used on water-injection skids These changes will result in an advantage in reliability and maintainability, thereby improving the MTBF

Steam Injection Systems

Steam is the diluent of choice for controlling emissions from gas turbines applied to cogeneration and combined-cycle systems Steam, because of its available energy, provides a substantial improvement in gas turbine heat rate Steam flow requirements are nominally 1 4 times those required for water injection As with the water injection system, the gas turbine control system is designed to maintain appropriate steam-to-fuel ratios as a function of fuel flow level, ambient temperature and humidity, and site requirements The steam-injection system is designed for automatic initiation, with appropriate timers and temperature sensors to automatically sequence valves and line drains to prevent condensate from entering the injector lines **Figure 6-46** shows a typical steam injection system

The improvement in gas turbine performance with steam injection, coupled with the availability of excess steam at many sites, has led to the consideration of steam injection, beyond levels required for emissions control, as a means of augmenting turbine output However, there is a limit to the amount of steam that may be injected into the gas turbine in general, and into the primary zone of the combustor in particular The latter limit is set by the flameout characteristics of the combustor, while the former is set by mechanical considerations and compressor pressure ratio limitations

The maximum allowable total steam injection to the gas turbine is approximately 5% of existing air flow depending on model series, and prevailing ambient and machine conditions The turbine control system divides this between emissions control steam injected into the combustor, and power-augmentation steam injected into the compressor discharge

651

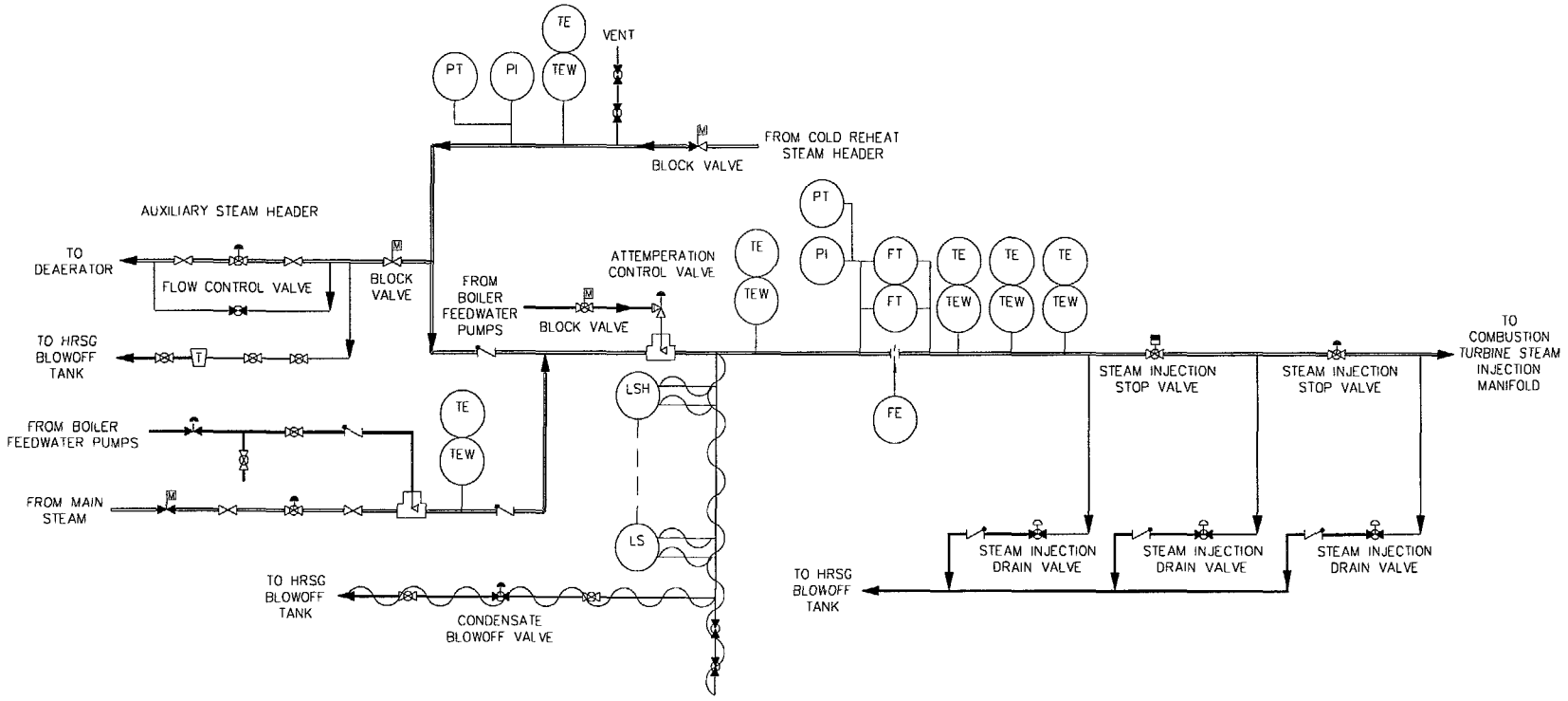

Figure 6-46 Steam Injection System

In most cases, control of augmentation steam is achieved as an extension of the normal turbine governing characteristic in a technique referred to as "dual governing " Dual governing allows the governor to control turbine output beyond the point where fuel is limited by the temperature control system Where excess steam is usually available, it is also possible to base load the augmentation steam, and allow the gas turbine governor to alter output using fuel flow when operating below rated exhaust temperature

6 4 9 Fire Protection System

Gas turbine fire protection systems are designed to meet the requirements of National Fire Protection Association (NFPA) code No 12 The primary fire protection medium is carbon dioxide The Halon fire protection medium is a viable option and is offered by several manufacturers The Halon system is designed to meet NFPA No 12A or No 12B

In recent years the use of Halon has been limited due to its environmental impact on the ozone layer The Federal Environmental Protection Agency and the Montreal Protocol has directed the Halon producers to limit the production of Halon to 1986 levels The International Environmental Agency will eventually ban the production of Halon Gas turbine manufacturers are working with the fire extinguishant producers for alternatives like FE-25 by DuPont which will eventually replace Halon

The majority of heavy-duty gas turbines use low-pressure CO_2 tanks T he tanks' contents are cooled by a refrigeration system that prevents over-pressurization at higher ambient temperatures The refrigerant tanks are sized for 200% capacity The smaller gas turbines use high-pressure bottles The fire protection system consists of initial and extended discharges, **Figure 6-47** Within a few seconds after actuation, sufficient CO_2 flows into the compartments of the gas turbine unit to rapidly build up an extinguishing concentration This concentration is maintained for a prolonged period of time by the gradual addition of more CO_2 from the extended discharge, compensating for the compartment leakage

The LP and HP systems are equipped with microprocessor control panels Redundant fire detectors are located and wired to a separate control panel The use of redundant fire detectors prevents a false trip of the turbine should a fire detector fail Should a fire occur, the fire is sensed by more than one fire detector in the appropriate zone and a legitimate trip of the gas turbine would occur

661

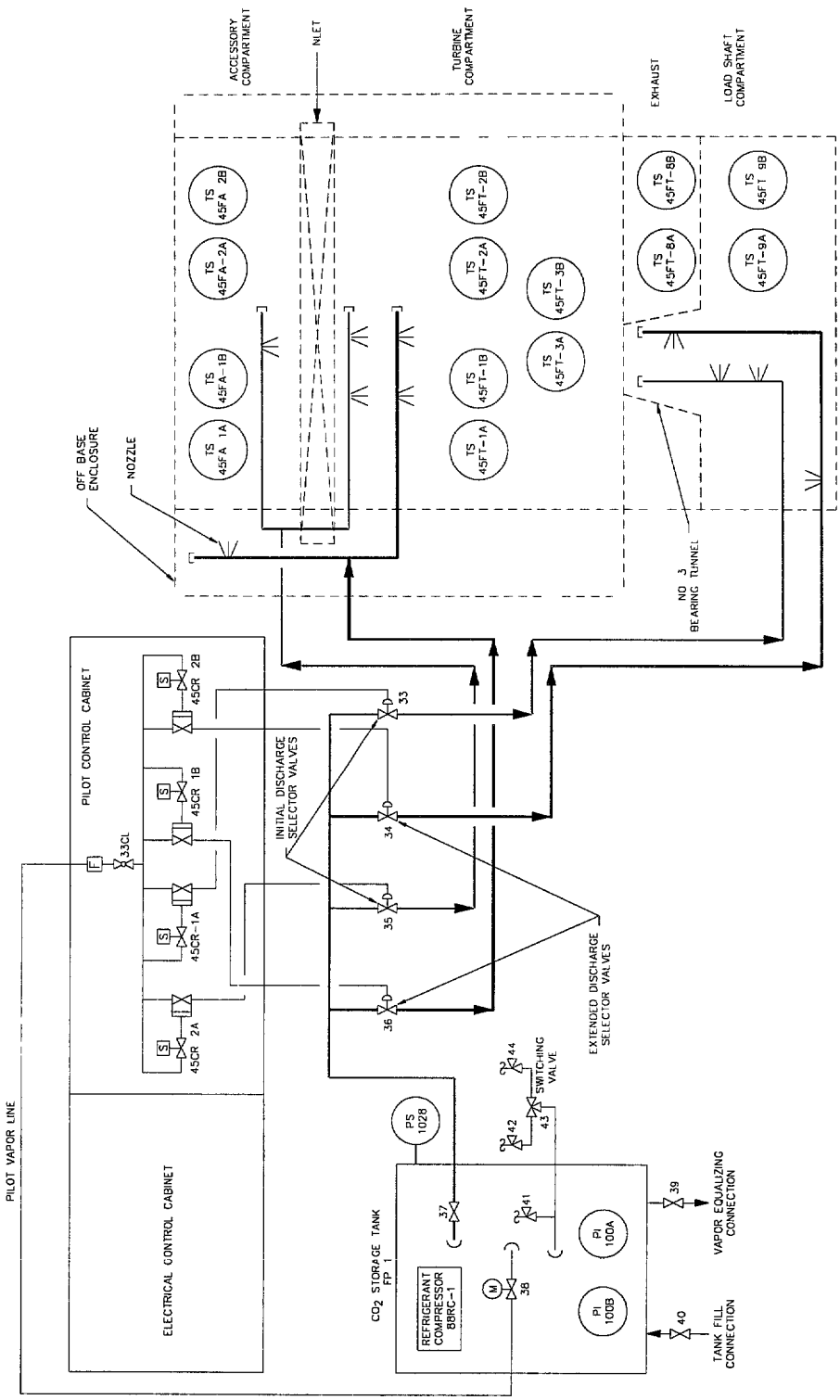

Figure 6-47 Fire Protection System

662

6 4 10 Gas Turbine Controls

The commercialization of microprocessor technology has had a very significant impact on gas turbine reliability Incorporation of this technology into gas turbine systems in the form of digital microprocessor controls has allowed turbine manufacturers to design many new features that were previously impossible or impractical The data can now be manipulated, analyzed, and displayed to assist in troubleshooting and maintenance functions The cost effectiveness of these microprocessor controls has enabled manufacturers to incorporate three computers operating in parallel in every control system These three computers accept the same signals from the different sensors on the gas turbine If a malfunction should occur in one of the computers, the other two can recognize and diagnose the malfunction and 'vote' to ignore the control signals from the faulty computer

In order to eliminate trips resulting from a failed sensor, the "trip sensors" have been made redundant so that the computers can diagnose them as well Each critical trip function, except the mechanical shaft speed (overspeed bolt), has at least three separate sensors whose signals are fed to each of the three computers Many sensors such as fire detectors and exhaust thermocouples have quantities much greater than three and are wired-up strategically to maximize the number of sensors that can fail before an unnecessary trip can occur

The newest generation of gas turbine control systems used on GE machines is the SPEEDTRONIC Mark V This control system is the first GE control system for use with both gas and steam turbines A brief functional description of the SPEEDTRONIC control system is provided in the following section

<u>Function</u>

The combustion turbine has a number of control and protection systems designed for reliable and safe operation of the unit Control of the turbine is done mainly by control sub-loops namely startup, speed, acceleration, synchronization, and temperature control Protection systems are provided to prevent abnormal conditions which could result in damage to the turbine

The critical operating parameters monitored by the protection system are

- Temperature
- Speed
- Vibration
- Flame

Overtemperature and overspeed protection system are provided as independent backup systems for the temperature control and speed control systems Vibration detection and protection is activated by abnormal turbine vibration amplitude reaching a preset level The flame detection and protection system is activated if flame is not established during startup or if flame is lost during operation Each protection system has redundant channels of operation Each of the channels operates independently and will trip the unit if it's signal corresponds to a trip condition

Sensors monitor the turbine speed, temperature, and compressor discharge pressure to determine the operating conditions of the unit When it is necessary for the turbine control to alter the turbine operating conditions, it is accomplished by modulating the flow of fuel to the turbine For example, if the exhaust temperature starts to exceed its predetermined value for a given operating condition, the temperature control circuit reduces the fuel supplied to the turbine, thereby limiting exhaust temperature

The Speedtronic system is a microcomputer control system which provides the analog and digital signals required to control and protect the operation of the combustion turbine Operating conditions of the turbine are sensed and utilized as feedback signals There are three major control loops - startup, speed, and temperature, which may be in control during turbine operation The output of these control loops is connected to a minimum value select circuit which allows the lowest voltage output of these control loops to pass to the fuel control system as the controlling Fuel Stroke Reference (FSR) voltage FSR is the command signal for the fuel Switching between the control modes of speed, temperature, and startup control takes place automatically The controlling FSR establishes the fuel input to the turbine at the value required by the system which is in control, **Figure 6-48** Displays on the turbine control panel CRT indicates which of the control systems is controlling the FSR

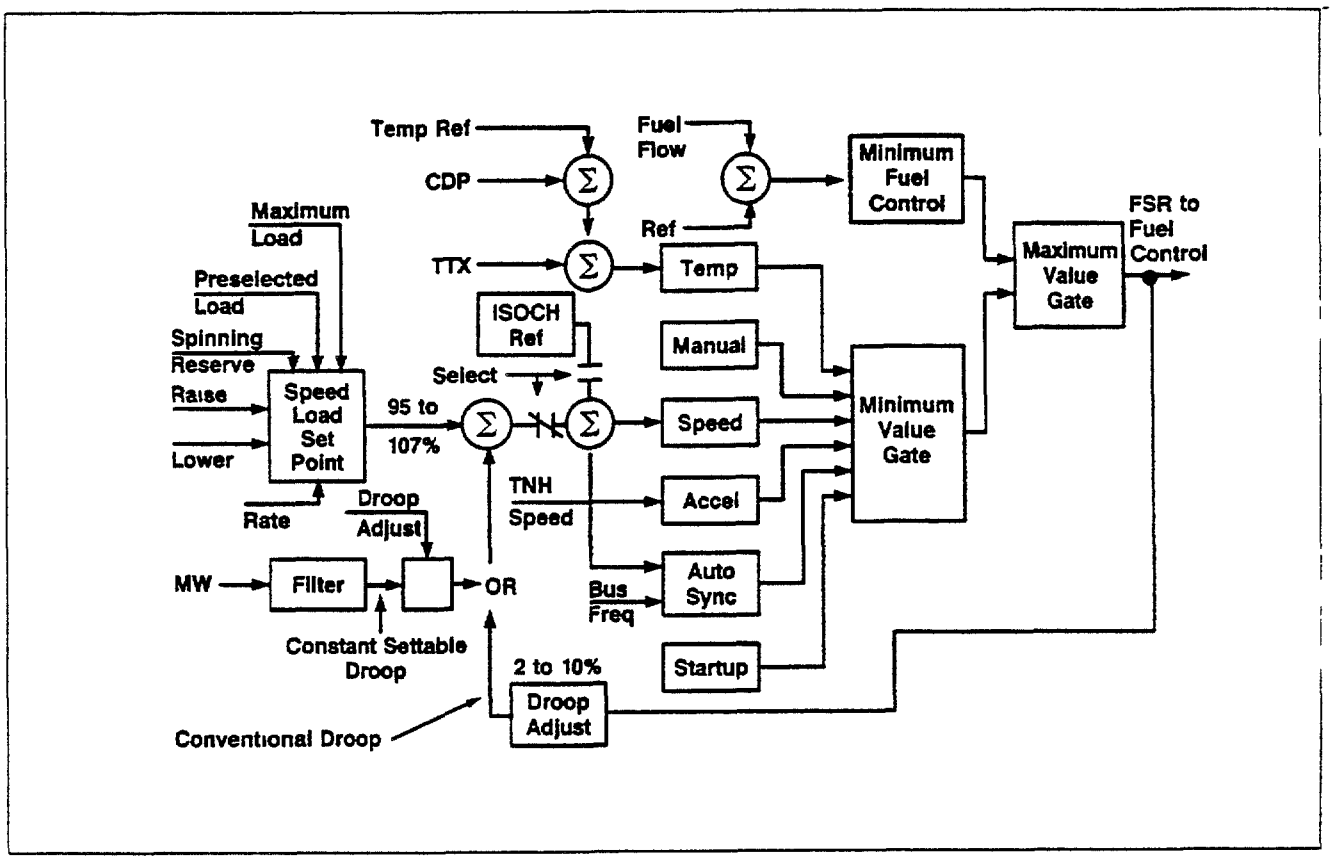

Figure 6-48 FSR - Minimum Value Selection

The combustion turbine protection systems are comprised of a number of sub-systems The protection systems operate during each normal startup and shutdown The most common type of failure on a combustion turbine is the failure of a sensor The protection systems are set up to detect and alarm such failures If the condition is serious enough to disable the protection completely, the turbine is actually shut down

Protective systems respond to trip signals such as pressure switches relaying conditions such as low lube oil pressure They also respond to more complex parameters such as overspeed, overtemperature, vibration, and loss of flame Some of these protection systems and their components operate through a master control and protection circuit, while other totally mechanical systems operate directly on the components of the turbine For each type of system, there are two independent paths for stopping fuel flow by closing both the fuel control valves (FCV), and the stop valve (FSV)

Starting/Shutdown Sequence and Control

Starting the combustion turbine involves proper sequencing of command signals to the accessories, the starting system and the fuel control system Since a safe and successful startup depends on proper functioning of the combustion turbine equipment much of the control logic circuitry is dedicated to enabling protective circuits and obtaining permissive conditions

An important part of the turbine startup/shutdown sequence is proper speed sensing A number of speed detectors and relays are used to sense speed The zero-speed detector provides a signal when the turbine shaft starts rotating If speed is below the setpoint of the zero speed detector, permissive logic initiates clutch engagement and the cranking sequence for the turbine During the shutdown sequence, the zero speed detector provides a signal to engage the ratchet gear or turning device This occurs during the automatic cool down sequence of the combustion turbine The minimum speed detector indicates that the turbine has reached the minimum firing speed and initiates a purge prior to ignition The minimum speed relay also provides several permissive functions in the restarting of the combustion turbine after shutdown

The acceleration speed relay pickup indicates that the turbine has reached approximately 40 to 50 percent in the acceleration cycle The high speed sensor pickup indicates that the turbine is at operating speed, and that the accelerating sequence is complete

The high speed sensor dropout speed is also used to close unmodulated inlet guide vanes when the turbine is shut down During a normal shutdown, digital setpoint is reduced to a minimum value, the generator breaker opens on reverse power and the fuel stroke reference is reduced to a minimum value Flame is maintained to shutdown speed until the acceleration speed relay drops out When the acceleration speed relay drops out, the fuel stroke reference is driven to zero

Should the turbine and generator bog down, the high speed sensor drops out at the under frequency speed setting The inlet guide vanes are closed and the compressor bleed valves open Approximately 1 5 seconds after the high speed sensor drops out, the generator breaker trips open and the digital setpoint is reset to 100 3%

As the turbine accelerates, the high speed sensor picks up, and the inlet guide vanes open The turbine will then require a start signal before the generator breaker is closed

Starting Equipment

The starting equipment may be a starting motor with a torque converter, a static starting system, or a diesel engine The startup sequence is essentially the same in each case This section discusses a gas turbine having a motor driven starting system The starting motor is started with the converter drained, and should attain "no-load" speed in about two seconds The charge pump supplies oil to fill and pressurize the converter loop in about ten to fifteen seconds Loop pressure is regulated by an orifice and pressure regulator in the converter discharge When pressurized, the converter is powered by the motor and supplies power to the combustion turbine through the starting clutch Breakaway torque is supplemented by the ratchet system Output power of the converter accelerates the unit to purge speed (approximately 1080 rpm) Purge speed is not adjustable and is determined by the power demand After the unit is fired, the converter continues to supply power until the unit becomes self-sustaining Converter power output decreases to zero (at only a very small decrease in input power) and the clutch automatically opens The motor de-energizes and the converter loop drains back to the tank

Speed Control

The speed control system is designed to control the speed and load of the turbine The speed control system operates in response to actual turbine speed and a called-for speed reference The speed of the turbine is measured by three magnetic pickups Droop speed control is based on the fact that the power grid to which the generator is connected will hold a synchronous generator speed at grid frequency The speed control software changes command voltage (FSR) in proportion to the difference between the actual turbine-generator speed and the called for speed reference (TNR) Once the generator breaker is closed on the power grid, speed is held relatively constant at synchronous speed Fuel flow in excess of that to maintain full speed no load results in increased power produced by the generator The speed control loop acts as a load control loop and the speed reference controls the desired load on the turbine-generator unit

If the entire grid system tends to be overloaded, grid frequency (or speed) decreases This drop in frequency causes a fuel stroke reference increase in proportion to the droop setting Units with the same droop setting share load increases equally Load sharing is a main advantage using this method of speed control If 4% droop is selected, a 1% change in speed produces a change in fuel flow equal to equivalent to 25% percent of rated load This results in fast system response to transient changes and helps hold system frequency Normally 4% droop is selected and a setpoint is calibrated such that a 104% setpoint generates a speed reference that produces a FSR resulting in base load at design ambient temperature

Exhaust Temperature Control and Protection

A temperature control system is required to control fuel flow to the combustion turbine The temperature control system maintains operating temperatures within the design thermal stress limitations of the turbine parts The highest temperature attained in a combustion turbine occurs in the combustion chambers The same gas temperature also occurs at the turbine inlet The temperature control system is designed to measure and control turbine exhaust temperature Since it is impractical to measure temperature in the combustion chambers or at the turbine inlet directly, the indirect control of turbine inlet temperature, called firing temperature, is possible through known turbine performance relationships The exhaust temperature alone does not fully determine firing temperature, the measured compressor discharge pressure is also required

The temperature control system compares the exhaust temperature control setpoint with the measured combustion turbine exhaust temperature as sensed by thermocouples located in the exhaust plenum The thermocouple inputs are fed to the control system where they are sorted from the highest to the lowest and stored The thermocouple inputs are used in the combustion monitor program and the temperature control program

Reading the exhaust thermocouples daily aids in monitoring the combustion system and in detecting faulty thermocouples Changes in the combustion system are detected easily after a normal pattern of temperatures has been established Diverging temperatures in the exhaust system usually indicate deterioration of the combustion

chamber, or poor fuel distribution (dirty fuel nozzle) Below normal thermocouple readings indicate thermocouple deterioration The thermocouple readings are used to define a "baseline value" of exhaust temperature spread for comparing future data Baseline data is established during steady state operation after each of the following conditions

- Initial startup of unit
- Before and after a planned shutdown
- Before and after a planned maintenance

When reviewing exhaust temperature readings to observe any trend which may indicate deterioration of the combustion system, gradual and/or sudden temperature excursions should be investigated as soon as possible to determine the validity of readings

Faulty thermocouples should be replaced as soon as possible If a maximum of two control thermocouples (but only one of any three adjacent ones) become inoperative, they should be placed on "Reject" until replacement is possible Placing the input signals on "Reject" avoids the possibility of inaccurate averaging of temperature No more than one overtemperature thermocouple per channel should be placed on "Reject" at any one time A maximum differential spread of 150°F between thermocouples located in the same wheelspace area, side to side should not be exceeded

Combustion Monitor Function

Monitoring of the exhaust thermocouples to detect combustion problems is performed by microprocessor based controllers coupled with solid state analog devices for interfacing with primary controls and protective devices The primary functions of the combustion monitor is to reduce the likelihood of extended damage to the combustion turbine if the combustion system deteriorates The combustion monitor examines the exhaust temperature thermocouples Any changes that occur in the pattern of the thermocouple readings generates warning and protective signals that are sent to the combustion turbine control panel

Flame Detection and Protection System

The flame detection system has two basic functional requirements

- It must detect the "presence-of-flame" during startup A "presence-of-flame" signal is prerequisite for continuation of the startup sequence

- During operation, the system must detect the "absence-of-flame" to trip the combustion turbine The "absence-of-flame" signal is very critical to the protection of the combustion turbine and associated heat recovery equipment

The system is designed to detect the presence of ultraviolet radiation which is emitted by a hydrocarbon flame and to provide a signal when the radiation is sensed for a sufficient time period

6 5 Operation and Maintenance Considerations

As with any other piece of machinery, the gas turbine is only as good as the maintenance that is performed on it on a regular basis Several factors are involved in terms of both operations and maintenance that should be known to personnel involved in the running of gas turbine power plants This section addresses these operation and maintenance factors

6 5 1 Operating Modes and Their Effect on Gas Turbine Maintenance

The efficiency and performance of gas turbines are very sensitive to the mode in which they are operated The best mode by far is steady base load operation, with minimum changes in operating parameters However, this is not always possible specially if the gas turbines are simple cycle machines designed for cycling or peak service only The factors that have the most significant impact on gas turbine condition are

- Cycling
- Type of start normal versus fast (emergency)
- Base versus peak (firing temperature) mode of operation
- Steam/water injection for NO_x control/power augmentation
- Fuel and Air quality

The effect of each of these factors on gas turbine condition and maintenance is discussed in detail in the following paragraphs

6 5 2 Maintenance Philosophy and Planning

Maintenance costs and availability are two of the most important concerns to the equipment owner A maintenance program that optimizes the owner's costs and maximizes equipment availability must be instituted For a maintenance program to be effective the following must occur

- The owner must develop a general understanding of the relationship between his operating plans and priorities for the plant
- The skill level of operating and maintenance personnel should be sufficient to operate and maintain the plant in the optimum manner
- The manufacturer's recommendations regarding the number and types of inspections should be rationalized
- Spare parts planning should be implanted
- The major factors affecting component life and proper operation of the equipment should be recognized and addressed

In this section, operating and maintenance practices are reviewed, with an emphasis placed on the types of inspections plus operating factors that influence maintenance schedules A well-planned maintenance program results in maximum equipment availability and optimal maintenance costs

Advance planning for maintenance is a necessity for a utility Also, the correct control of planned maintenance and inspection provides direct benefits in reduced forced outages and start failures The correct control of planned maintenance and inspection reduces unscheduled repair downtime The primary factors that affect the maintenance planning process are shown in **Figure 6-49** The owners' operating mode also determines how each factor is weighted A typical maintenance program includes a variety of essential items as identified in **Figure 6-50**

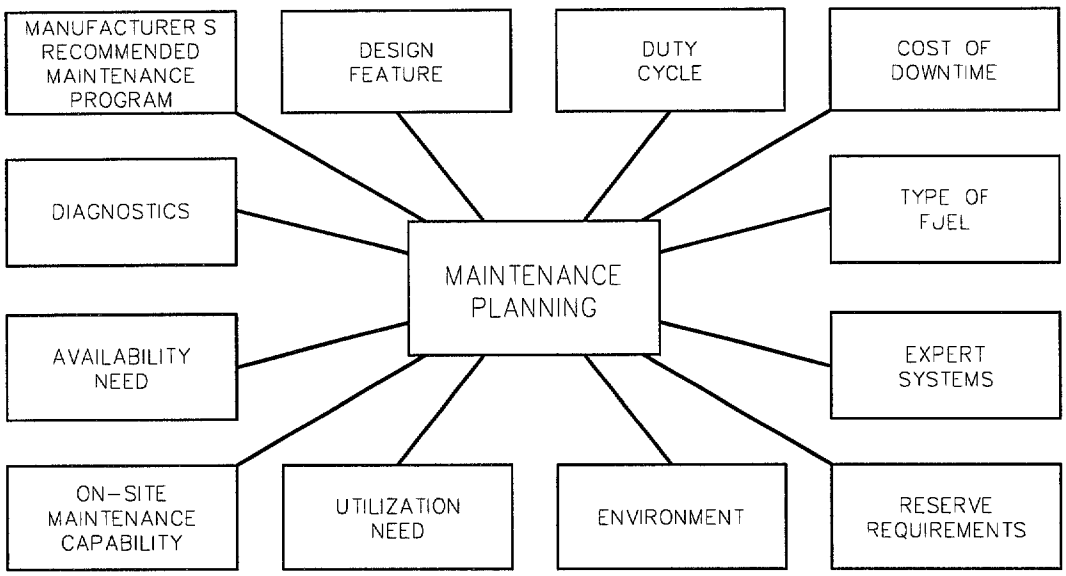

Figure 6-49 Factors Affecting Maintenance Planning

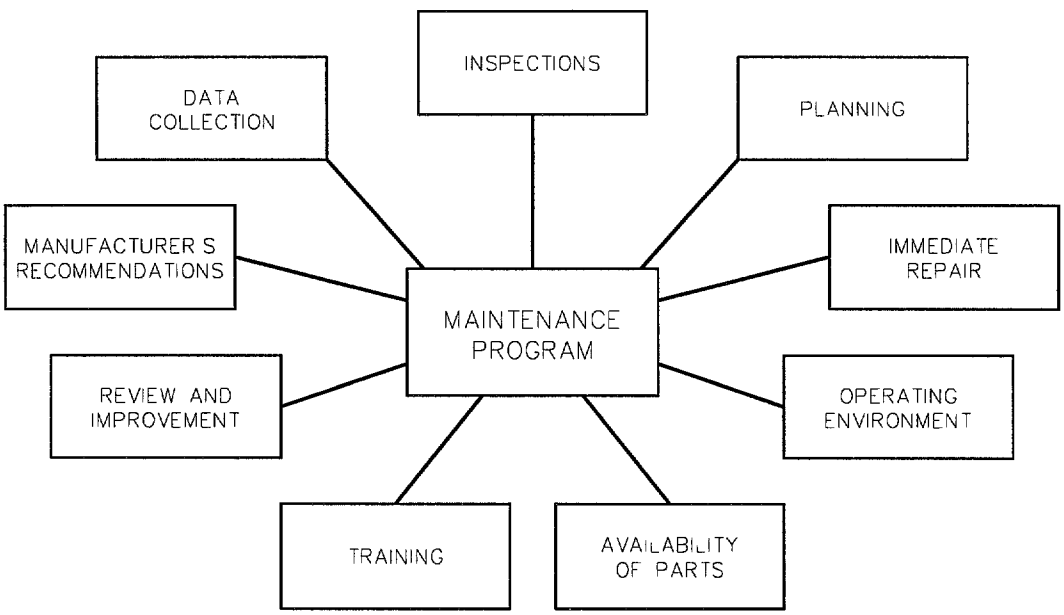

Figure 6-50 Elements of a Maintenance Program

Parts unique to the gas turbine requiring the most careful attention are those associated with the combustion process and those parts exposed to high temperatures from the hot gases The parts are also called hot-gas-path parts and include combustion liners, cross-fire tubes, transition pieces, turbine nozzles, turbine stationary shrouds and turbine buckets

The basic design and recommended maintenance of heavy-duty gas turbines are oriented toward

- Maximum periods of operation between inspection and overhauls
- In-place, on-site inspection and maintenance
- Use of local trade skills to disassemble, inspect and re-assemble

In addition to maintenance of the basic gas turbine, the control devices, fuel metering equipment, gas turbine auxiliaries, load package, and other station auxiliaries also require periodic servicing

The primary maintenance effort is attributed to five basic systems, namely the controls and accessories, combustion components, turbine, generator, and balance-of-plant The unavailability of controls and accessories is generally composed of numerous short-duration outages, whereas conversely the other four systems are composed of far fewer, but usually longer-duration outages

The inspection and repair requirements, outlined by gas turbine manufacturers lend themselves to establishing a pattern of inspections In addition, supplementary information is provided through a system of Technical Information Letters (TIL's) from manufacturers This updating of information, contained in the gas turbine's Maintenance and Instructions Manual assures optimum installation, operation and maintenance of the turbine Many of the TIL's contain advisory technical recommendations to resolve problems and improve the operation, maintenance, safety, reliability or availability of the turbine The recommendations contained in TIL's should be followed and factored into the overall maintenance planning program

67

6 5 3 Maintenance Features of Gas Turbine Design

Heavy-duty gas turbines are designed to withstand severe duty and to be maintained on-site Off-site repair is required only on certain hot-gas-path parts and rotor assemblies needing specialized shop service The following features are designed into typical heavy-duty gas turbines to facilitate on-site maintenance

- All casings, shells and frames are split on machine horizontal centerline Upper halves may be lifted individually for access to internal parts
- With upper-half compressor casings removed, all stator vanes can be slid circumferentially out of the casings for inspection or replacement without rotor removal On most designs, the variable inlet guide vanes (VIGV's) are removed radially with the upper half of the inlet casing removed
- With the upper-half of the turbine shell lifted, each half of the first-stage nozzle assembly can be removed for inspection, repair or replacement without removing the rotor On some units, upper-half, later-stage nozzle assemblies are lifted with the turbine shell also, allowing inspection and/or removal of the turbine buckets
- All turbine buckets are moment-weighed and computer charted in sets for rotor spool assembly so that they may be replaced without the need to remove or rebalance the rotor assembly
- All bearing housings and liners are split on the horizontal centerline so that they may be inspected and replaced, when necessary The lower half of the bearing liner can be removed without removing the rotor
- All seals and shaft packings are separate from the main bearing housings and casing structures and may be readily removed and replaced
- Fuel nozzles, combustion liners and flow sleeves can be removed for inspection, maintenance or replacement without lifting any casings or removing combustion cans
- All major accessories, including filters and coolers, are separate assemblies that are readily accessible for inspection or maintenance They may also be individually replaced as necessary

Inspection aid provisions have been built into many heavy-duty gas turbines to facilitate conducting several special inspection procedures These special procedures provide for visual inspection and clearance measurement of the critical internal turbine hot-gas-path components without removal of the gas turbine outer casings and shells These procedures include gas-path borescope inspection and turbine nozzle axial clearance measurement

Borescope Inspections

Heavy-duty gas turbines incorporate provisions in both compressor casings and turbine shells for gas-path visual inspection of intermediate compressor rotor stages, first-, second- and third stage turbine buckets and turbine nozzle partitions by means of the optical borescope The provisions consist of radially aligned holes through the compressor casings, turbine shell, and internal stationary turbine shrouds The radial holes are designed to allow entry of an optical borescope into the compressor or turbine flow-path area as shown in **Figure 6-51**

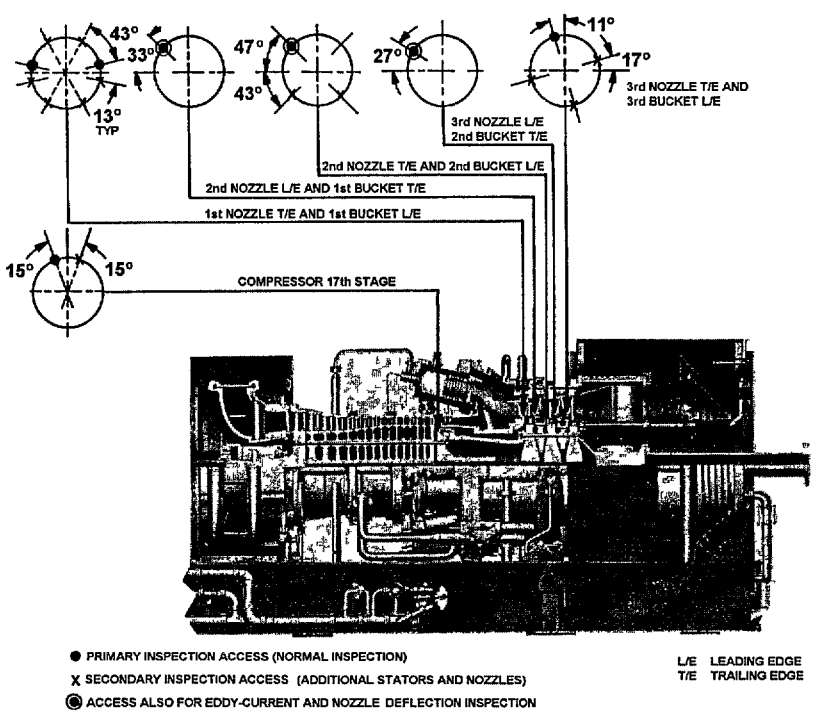

Figure 6-51 Borescope Inspection Holes

675

An effective borescope inspection program can result in removing casings and shells from a turbine unit only when it is necessary to repair or replace parts **Figure 6-52** provides a recommended interval for a planned borescope inspection program following initial base line inspections These borescope inspection intervals are based on average unit operating modes Adjustment of these borescope intervals may be made based on operating experience and the individual unit mode of operation, the fuel used and the results of previous borescope inspections

BORESCOPE	GAS AND DISTILLATE FUEL OIL	AT COMBUSTION INSPECTION OR ANNUALLY WHICHEVER OCCURS FIRST
	HEAVY FUEL OIL	AT COMBUSTION INSPECTION OR SEMIANNUALLY WHICHEVER OCCURS FIRST

Figure 6-52 Borescope Inspection Program

The application of a monitoring program using a borescope allows scheduling outages and preplanning of parts requirements, resulting in lower maintenance costs and higher availability and reliability of the gas turbine

Nozzle Clearance Measurements

Certain axial clearances between the stationary and rotating components within a gas turbine can change with operation of the turbine The amount and rate of clearance changes are dependent on the following

- operating temperatures
- pressure differentials
- rates of load change
- operating time

67

Measuring the absolute values of the axial clearances at periodic intervals provides an indication of the rate of change and permit advance planning of required maintenance

Measurement of the GE 7001 gas turbine section axial clearances between the second-stage turbine nozzle sidewall and the second-stage turbine bucket shank, and the third-stage turbine nozzle sidewall and the third-stage turbine bucket shank, can be accomplished without removing the turbine shell A one-inch-diameter hole is provided through the turbine shell and stationary shrouds at the locations The axial clearances found at these locations are measured using a special taper gauge in conjunction with a borescope

6 5 4 Major Factors Influencing Maintenance and Equipment Life

There are many factors that can influence equipment life and these must be understood and accounted for during maintenance planning As indicated in **Figure 6-53**, starting cycle, power setting, fuel, and level of steam or water injection are key factors in determining the maintenance interval requirements as these factors directly influence the life of critical gas turbine parts

- FUEL
- FIRING TEMPERATURE
- STEAM/WATER INJECTION
- CYCLIC EFFECTS
- AIR QUALITY

SERVICE FACTORS DIFFERENT FROM THE REFERENCE CONDITION* CAN INCREASE MAINTENANCE COST AND REDUCE MAINTENANCE INTERVALS

* GAS FUEL BASE LOAD STEAM/WATER INJECTION AT 42PPM NO_X LEVEL

Figure 6-53 Factors Affecting Equipment Life

One approach to maintenance planning is to establish baseline conditions that set the maximum recommended maintenance intervals For operation that differs from the baseline, maintenance factors are established that determine the increased level of maintenance required For example, a maintenance factor of two would indicate a maintenance interval that is half of the baseline interval

Starts and Hours Criteria

Gas turbines wear out in different ways for different service-duties Thermal-mechanical fatigue is the dominant limiter of life for peaking machines, while creep, oxidation, and corrosion are the dominant limiters of life for continuous duty machines These mechanisms are considered in the gas turbine design criteria, but to a great extent are second order effects For this reason, gas turbine maintenance requirements are based on independent counts of starts and hours Whichever criteria limit is first reached determines the maintenance interval A graphical display of one approach is shown in **Figure 6-54** In this figure, the inspection interval recommendation is defined by the rectangle established by the starts and hours criteria These recommendations for inspection fall within the design life expectations and are selected such that components verified to be acceptable for continued use at the inspection point will have low risk of failure during the subsequent operating interval

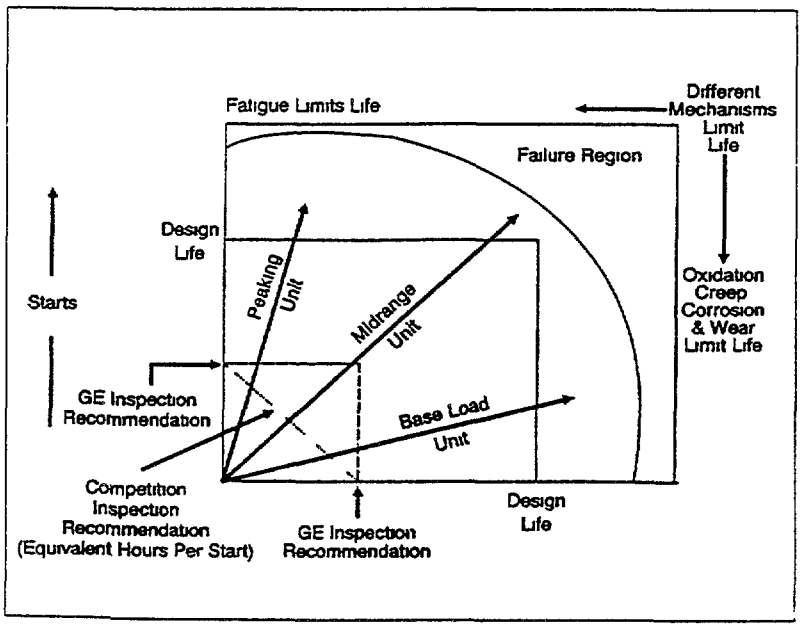

Figure 6-54 Maintenance Internal Determination for Gas Turbines

An alternative to this approach is to convert each start cycle to an equivalent number of operating hours (EOH) The inspection intervals are then based on the equivalent hours count For the reasons stated above, some manufacturers do not agree with this approach The alternative approach can create the impression of longer intervals, while in reality, more frequent maintenance inspections are required

Fuel

Fuels burned in gas turbines range from clean natural gas to residual oils and impact maintenance as illustrated in **Figure 6-55** Heavier hydrocarbon fuels, which have a maintenance factor ranging from three to four, generally release a higher amount of radiant thermal energy The higher amount of radiant thermal energy results in a subsequent reduction in combustion hardware life Fuels also frequently contain corrosive elements such as sodium, potassium, vanadium, and lead that can lead to accelerated hot corrosion of turbine nozzles and buckets

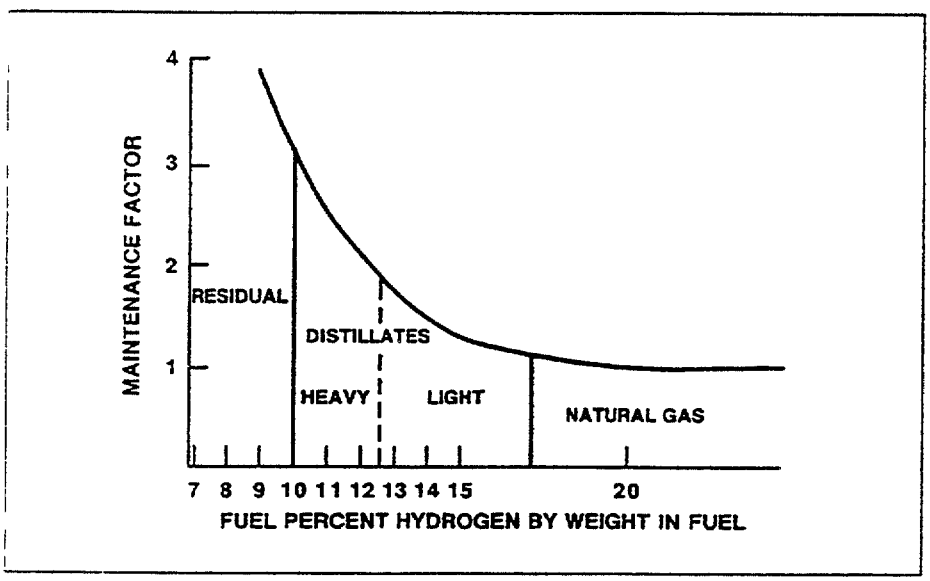

Figure 6-55 Impact of Fuels on Gas Turbine Maintenance

Distillates do not generally contain high levels of corrosive elements, but harmful contaminants can be present in these fuels when delivered to the site Two common ways of contaminating number two distillate fuel oil are salt water ballast mixing during sea transport, and distillate fuel contamination when transported in tankers that were previously

used to transport contaminated fuel or leaded gasoline Experience with distillate fuels indicates that the maintenance factor can range from as low as one (equivalent to natural gas) to as high as three Unless operating experience suggests otherwise, it is recommended that a maintenance factor of 1 5 be used for operation on distillate oil Contaminants in liquid fuels can also affect the life of gas turbine auxiliary components such as fuel pumps and flow dividers

Gas fuels are considered the optimum fuel with regard to turbine maintenance and are assigned no negative impact However, if condensed liquid hydrocarbons are present in gas fuel and are allowed to carryover into the gas turbine fuel system, a reduction in hot-gas-path component life results While hydrocarbon carryover in very small concentrations can be tolerated, the presence of liquid hydrocarbon mist suggests the possibility of bulk carryover In the extreme case, liquid hydrocarbon carryover can expose the hot-gas-path components to severe over-temperature conditions The overtemperature condition can result in significant reductions in hot-gas-path component lives or repair intervals Hydrocarbon mist carryover can be controlled by using effective gas scrubber systems and by superheating the gaseous fuel prior to use to provide a nominal 50°F (28°C) superheat at the turbine gas control valve connection

Potentially high maintenance costs and loss of availability can be minimized or eliminated by

- Placing a proper fuel specification on the fuel supplier
- Providing a regular fuel quality sampling and analysis program
- Providing proper maintenance of the fuel treatment system when burning heavier fuel oils
- Providing cleanup equipment when there is a danger of contamination to restore the fuel to its original quality

Contaminants can also enter the turbine with the inlet air or from the steam or water injected for NO_x emission control or power augmentation Carryover from evaporative coolers is another source of contaminants Gas turbine manufacturer specifications define limits for maximum concentrations of contaminants for fuel, air and steam/water Limits from all sources are one ppm sodium plus potassium, one ppm lead, 5 ppm vanadium and two ppm calcium on a referred-to-fuel basis

6.8L

Firing Temperature

Significant operation at peak load, because of the higher operating temperatures, requires more frequent maintenance and replacement of hot-gas-path components Each hour of operation at peak load firing temperature is the same, from a bucket parts life standpoint, as six hours of operation at base load Peak load firing results in a maintenance factor of six

Higher firing temperature reduces hot-gas-path parts lives while lower firing temperature increases parts lives It is important to recognize that a reduction in load does not always mean a reduction in firing temperature In heat recovery applications, where steam generation drives overall plant efficiency, load is first reduced by closing variable inlet guide vanes to reduce inlet airflow For these applications, firing temperature does not decrease until load is reduced below approximately 80% of rated output Conversely, a turbine running in simple-cycle mode maintains full open inlet guide vanes during a load reduction to 80% and will experience over a 200°F reduction in firing temperature at this output level The hot-gas-path parts life effects for these different modes of operation are obviously quite different

Steam/Water Injection

Water (or steam) injection for emissions control or power augmentation can impact parts lives and maintenance intervals even when the water meets manufacturer specifications Higher gas conductivity increases the heat transfer to the buckets and nozzles and can lead to higher metal temperature and reduced parts lives

Parts life impact is related to the way the turbine is controlled The control system on most base load applications reduces firing temperature as water is injected By reducing the firing temperature, the effect of the higher heat transfer on the gas side results in no impact on bucket life On some installations the control system is designed to maintain firing temperature constant with water injection level This type of control results in additional unit output but decreases parts life Units controlled in this way are generally in peaking applications where annual operating hours are low or where operators have determined that reduced parts lives are justified by the power advantage GE refer to these two modes of operation as dry control curve operation and wet control curve operation **Figure 6-56** illustrates the wet and dry control curve and the performance differences that result from these two different modes of control

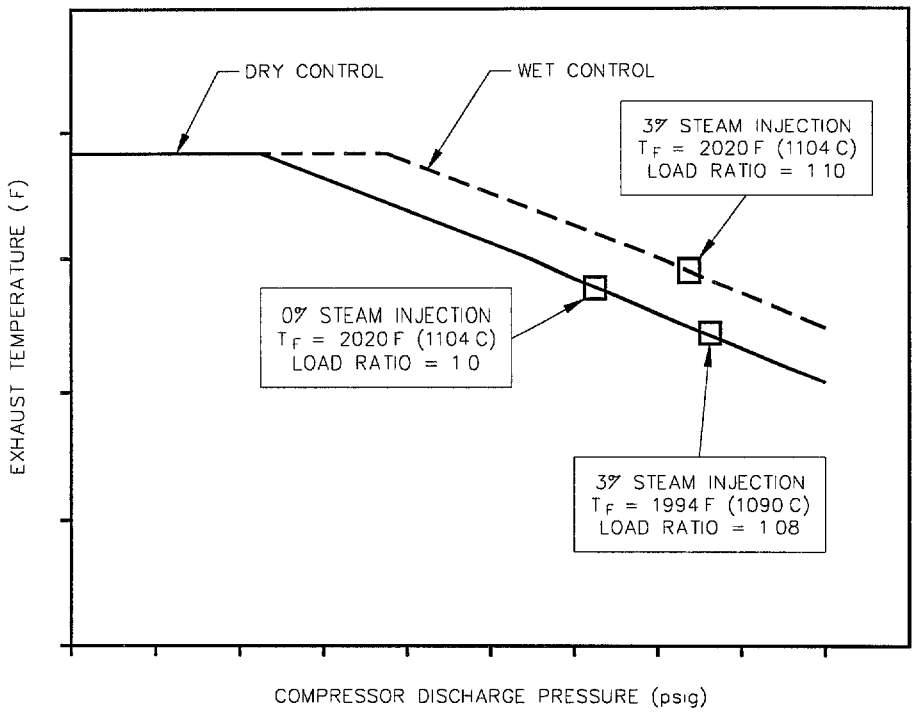

NOTE THE WET CONTROL CURVE MAINTAINS CONSTANT T_F

Figure 6-56 Wet and Dry Control Curves

An additional factor associated with water injection relates to the higher aerodynamic loading on the turbine components The higher aerodynamic loading results from the injected water increasing the cycle pressure ratio The additional loading increases the downstream deflection rate of the second- and third-stage nozzles By reducing the deflection rate of the second and third stage nozzles, the repair interval is reduced

Cyclic Effects

For cyclic-related effects, a single trip from full load produces a parts life effect equal to eight normal start/stop cycles The parts life effect of eight relates to the additional thermal strain that is produced in buckets and nozzles during a trip Higher strain range means fewer cycles before cracking **Figure 6-57** illustrates the difference in strain range for a bucket cycling through a normal start-up and shutdown cycle as

682

compared to the strain range produced during a cycle that terminates with a trip from load Similarly, emergency starts where units are brought from standstill to full load in less than five minutes have a parts life effect equal to 20 normal start cycles A normal start with fast loading produces a maintenance factor of two

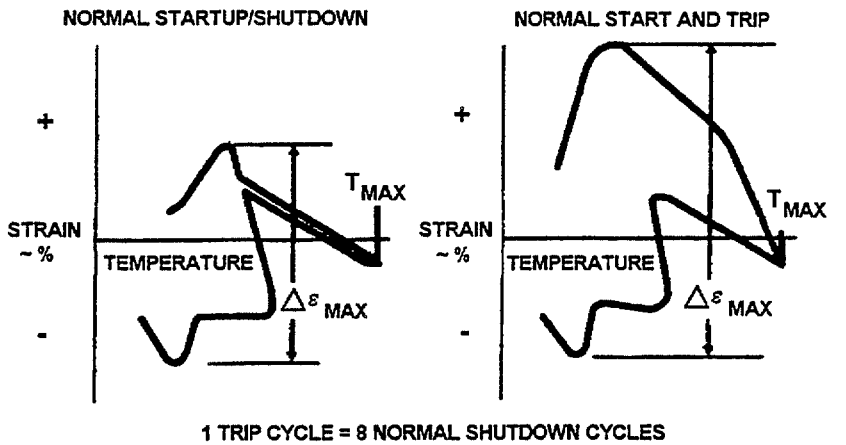

Figure 6-57 Bucket Strain Ranges for Normal and Trip Shutdown Cycles

Air Quality

Maintenance and operating costs are also influenced by the quality of the air that the turbine consumes In addition to the effects of airborne contaminants on hot-gas-path components, contaminants such as dust, salt and oil can also cause compressor blade erosion, corrosion and fouling Twenty micron particles entering the compressor can cause significant blade erosion Fouling can be caused by sub-micron dirt particles entering the compressor from the ingestion of oil vapor, smoke, sea salt and industrial vapors Corrosion of compressor blading causes pitting of the blade surface The pitting increases the surface roughness, and also serves as a potential site for fatigue crack initiation The surface roughness and blade contour changes decreases compressor airflow and efficiency which results in a decrease in gas turbine output and overall thermal efficiency

Generally, axial-flow compressor deterioration is the major cause of loss in gas turbine output and efficiency Recoverable losses, attributable to compressor blade fouling, typically account for 70 to 85 of the performance losses seen As **Figure 6-58** illustrates, compressor fouling to the extent that airflow is reduced by five percent, reduces output by 1 3 percent and increases heat rate by 5 5 percent On-line compressor wash systems are available that are used to maintain compressor efficiency by washing the compressor while at load Off-line systems are used to clean heavily-fouled compressors

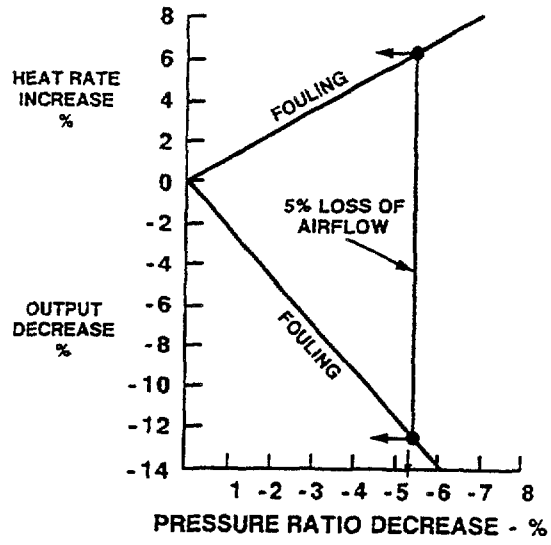

Figure 6-58 Compressor Fouling Effects on Efficiency and Heat Rate Cycles

There are also non-recoverable losses In the compressor, the non-recoverable losses are typically caused by nondeposit-related blade surface roughness, erosion and blade tip rubs In the turbine, nozzle throat area changes, bucket tip clearance increases, and leakages are potential causes

6 5 5 Maintenance Inspections

Maintenance Inspections may be broadly classified as standby, running, and disassembly inspections The stand-by inspection is performed during off-peak periods when the unit is not operating and includes routine servicing of accessory systems and device calibration The running inspection is performed by observing key operating parameters while the turbine is running The disassembly inspection requires opening the turbine for inspection of internal components and is performed in varying degrees

Disassembly inspections progress from the combustion inspection to the hot-gas-path inspection to the major inspection as shown in **Figure 6-59** Details of each of these inspections are described below

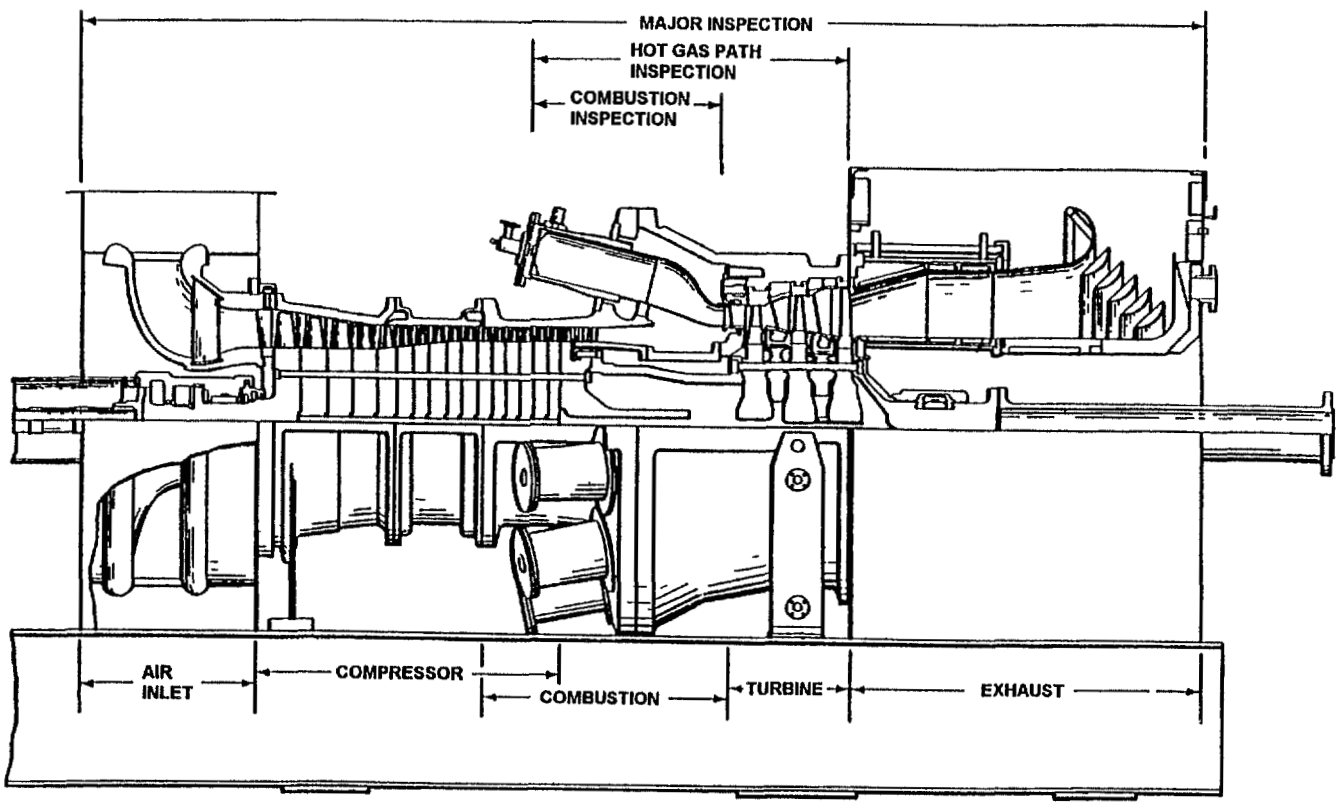

Figure 6-59 Gas Turbine Maintenance Inspections

685

Stand-by Inspections

Stand-by inspections are performed on all gas turbines Stand-by inspections are primarily used on gas turbines used in peaking and intermittent-duty service where starting reliability is of primary concern The stand-by inspection includes routinely servicing the battery system, changing filters, checking oil and water levels, cleaning relays and checking device calibrations Servicing can be performed in off-peak periods without interrupting the availability of the turbine A periodic start-up test run is an essential part of the stand-by inspection

Running Inspections

Running inspections consist of the general and continued observations made while a unit is operating The running inspection starts by establishing baseline operating data during initial start-up of a new unit and after any major disassembly work The baseline serves as a reference from which subsequent unit deterioration can be measured

Data should be taken to establish normal equipment start-up parameters Data should also be taken to establish key steady-state operating parameters Steady-state is defined as conditions at which no more than a 5°F/3°C change in wheelspace temperature occurs over a 15 minute time period

Data must be taken at regular intervals and should be recorded to permit an evaluation of the turbine performance and maintenance requirements as a function of operating time The operating inspection data, includes

- load versus exhaust temperature
- vibration
- fuel flow and pressure
- lubrication oil pressure
- exhaust gas temperatures
- exhaust temperature spread variation
- start-up time

6 RE

Each of these factors are discussed below

Load Versus Exhaust Temperature

The general relationship between load and exhaust temperature should be observed and compared to previous data Ambient temperature and barometric pressure have some effect upon the absolute temperature level High exhaust temperature can be an indicator of deterioration of internal parts, excessive leaks or a fouled air compressor For mechanical drive applications, it may also be an indication of increased power required by the driven equipment

Vibration Level

The vibration signature of the unit should be observed and recorded Minor changes will occur with changes in operating conditions However, large changes or a continuously increasing trend, give indications of the need to apply corrective action

Fuel Flow and Pressure

The fuel system should be observed for the general fuel flow versus load relationship Fuel pressures through the system should be observed Changes in fuel pressure can indicate the fuel nozzle passages are plugged, or that fuel metering elements are damaged or out of calibration

Exhaust Temperature and Spread Variation

The variations in turbine exhaust temperature spread should be measured and monitored on a regular basis Large changes or a continuously increasing trend in exhaust temperature spread indicates combustion system deterioration or fuel distribution problems If the problem is not corrected, the life of downstream hot-gas-path parts is reduced

Start-Up Time

Start-up time is an excellent reference against which subsequent operating parameters can be compared and evaluated A curve of the starting parameters (speed, fuel signal, exhaust temperature and critical sequence bench marks versus time) provides a good indication of the condition of the control system Deviations from normal conditions help pinpoint impending trouble, changes in calibration or damaged components

Coast-Down Time

Coast-down time is an excellent indicator of bearing alignment and bearing condition The time period from when the fuel is shut off on a normal shutdown until the rotor comes to a standstill can be compared and evaluated

Close observation and monitoring of these operating parameters serves as the basis for effectively planning maintenance work and material requirements needed for subsequent shutdown periods

Combustion Inspection

The combustion inspection is a relatively short disassembly shutdown inspection of fuel nozzles, liners, transition pieces, crossfire tubes and retainers, spark plug assemblies, flame detectors and combustor flow sleeves The combustion inspection concentrates on the combustion liners, combustion pieces, and fuel nozzles These components are recognized as being the first to require replacement and repair in a good maintenance program Proper inspection, maintenance and repair will contribute to a longer life of the downstream parts, such as turbine nozzles and buckets

Figure 5-60 illustrates a section of an MS7001 unit that is disassembled for a combustion inspection The combustion liners, transition pieces and fuel nozzles are removed and replaced with new or repaired components to minimize downtime The removed liners, transition pieces and fuel nozzles are then cleaned and repaired after the unit is returned to operation and are made available for the next combustion inspection interval Typical combustion inspection requirements for the MS7001 machines are

- Inspect and identify combustion chamber components
- Inspect and identify each crossfire tube, retainer and combustion liner
- Inspect combustion chamber interior for debris and foreign objects
- Inspect flow sleeve welds for cracking

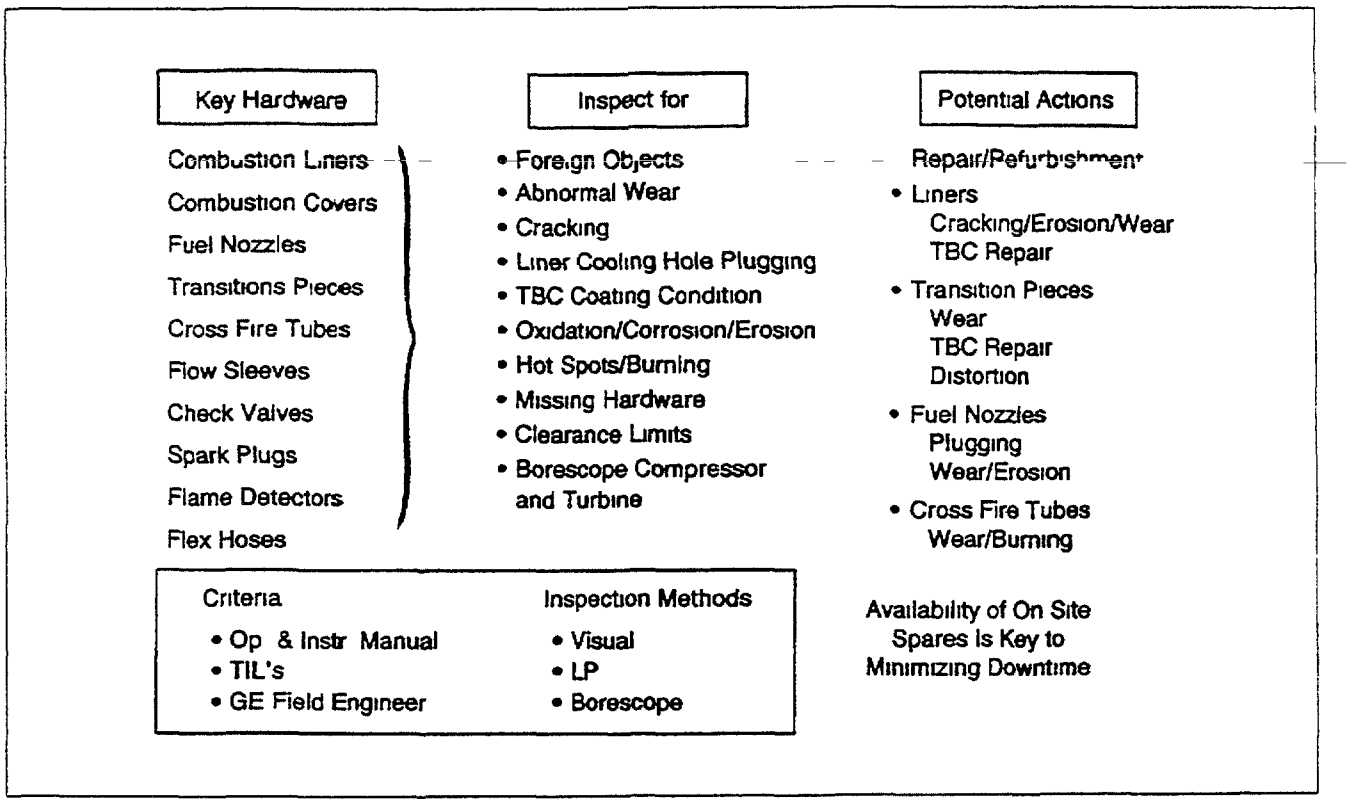

Figure 6-60 MS7001 Combustion Inspection

- Inspect transition piece for wear and cracks
- Inspect fuel nozzles for plugging at tips, erosion of tip holes and safety lock of tips
- Inspect all fluid, air, and gas passages in nozzle assembly for plugging, erosion, burning, etc
- Inspect spark plug assembly for freedom from binding, check condition of electrodes and insulators
- Replace all consumables and normal wear-and-tear items such as seals, lockplates, nuts, bolts, gaskets, etc
- Perform visual inspection of first-stage turbine nozzle partitions and a borescope inspection of the turbine buckets to mark the progress of wear and deterioration of these parts The borescope inspection helps to establish the schedule for the hot-gas-path inspection

- Perform borescope inspection of the blading in the aft end of axial-flow compressor by entering through the combustion wrapper
- Visually inspect the compressor inlet and turbine exhaust areas, checking condition of IGVs, IGV bushings, last-stage buckets and exhaust system components
- Measure the axial clearance between the nozzle inner sidewall and the bucket shank at the second and third stage The measurement of axial clearance is accomplished with a special tape gauge and a borescope

Hot-Gas-Path Inspection

The purpose of a hot-gas-path inspection is to examine those parts exposed to high temperatures from the hot gases discharged from the combustion process The hot-gas-path inspection includes the combustion inspection and a detailed inspection of the turbine nozzles, stationary stator shrouds and turbine buckets To perform this inspection, the top half of the turbine shell must be removed

For inspection of the hot-gas-path all combustion transition pieces and the first-stage turbine nozzle assembly are removed Removal of the second- and third-stage turbine nozzle segment assemblies is optional, depending upon visual observations and clearance measurement The buckets can usually be inspected in place Also, it is usually worthwhile to fluorescent penetrant inspect (FPI) the bucket vane sections to detect any cracks In addition, a complete set of internal turbine radial and axial clearances (opening and closing) are taken during any hot-gas-path inspection Typical hot-gas-path inspection requirements for MS7001 machines are

- Inspect and record condition of first-, second- and third-stage buckets
- Inspect first-stage bucket protective coating for remaining coating life
- Inspect and record condition of first-, second- and third-stage nozzles
- Inspect and record condition of later-stage nozzle diaphragm packings Check seals for rubs and deterioration of clearance
- Record the bucket tip clearances Inspect bucket shank seals for clearance, rubs and deterioration
- Check the turbine stationary shrouds for clearance, erosion, oxidation, rubbing, and build-up

- Check and replace any faulty wheelspace thermocouples
- Enter compressor inlet plenum and observe the condition of the forward section of the compressor Inspect IGVs for corrosion and bushing wear evidenced by excessive clearance and vane cracking
- Enter the combustion wrapper and with a borescope, observe the condition of the blading in the aft end of the axial-flow compressor
- Visually inspect the turbine exhaust area for any signs of cracking or deterioration

The first-stage turbine nozzle assembly is exposed to the direct hot-gas discharge from the combustion process and is subjected to the highest gas temperatures in the turbine section The high temperature frequently cause nozzle cracking and oxidation The second- and third- stage nozzles are exposed to high gas bending loads The high gas bending loads, in combination with the operating temperatures, can lead to downstream deflection and closure of critical axial clearances Some nozzle distress can be tolerated and criteria have been established for determining when repair is required A general rule is that first-stage nozzles will require repair during the hot-gas path inspection The second- and third-stage nozzles may also require refurbishment to re-establish the proper axial clearances Normally, turbine nozzles can be repaired several times to extend life It is generally repair cost versus replacement cost that dictates the replacement decision

Coatings play a critical role in protecting the first-stage buckets to ensure that the full capability of the high strength superalloy is maintained and that the bucket rupture life meets design expectations This is particularly true of cooled bucket designs that operate above 1985°F (1085°C) firing temperature Significant exposure of the base metal to the environment accelerates the creep rate Accelerating the creep rate can lead to premature failure through a combination of increased temperature and stress and a reduction in material strength

When dealing with coatings, it is recognized that the best coatings have a finite life and the condition of the coating plays a major role in determining bucket replacement life Refurbishment through stripping and recoating is an option for extending bucket life

Recoating is not considered an option for buckets with uncoated cooling holes The economics of recoating buckets must look at the cost to recoat versus the cost to replace buckets at more frequent intervals Economic evaluations of this trade-off suggest that recoating may make sense for the larger designs but less so for the smaller frame sizes

Visual and borescope examination of the hot-gas-path parts during the combustion inspections and nozzle-deflection measurements allow the operator to monitor distress patterns and progression Monitoring distress patterns and progression increases the accuracy of part-life predictions More accurate part-life predictions allows adequate time to plan for replacement or refurbishment at the time of the hot-gas-path inspection

Major Inspection

The purpose of the major inspection is to examine the internal rotating and stationary components from the inlet of the machine through the exhaust section The work scope involves inspection of all of the major flange-to-flange components of the gas turbine that are subject to wear during normal turbine operation The major inspection includes previous elements of the combustion and hot-gas-path inspections The major inspection involves laying open the complete flange-to-flange gas turbine to the horizontal joints with inspections being performed on individual items Depending on the coating condition, first-stage bucket replacement may be necessary at the major inspection

Typical major inspection requirements for MS7001 machines are

- All radial and axial clearances are checked against their original values (opening and closing)
- Casings, shells and frames/diffusers are inspected for cracks and erosion
- Compressor inlet and compressor flow-path are inspected for fouling, erosion, corrosion, and leakage The IGVs are inspected, looking for corrosion, bushing wear, and vane cracking
- Rotor and stator compressor blades are checked for tip clearance, rubs, bowing and cracking
- Turbine stationary shrouds are checked for clearance, erosion, rubbing, cracking, and build-up

- Seals and hook fits of turbine nozzles and diaphragms are inspected for rubs, erosion, fretting, or thermal deterioration
- Turbine buckets are removed and a nondestructive check of buckets and wheel dovetails is performed (first-stage bucket protective coating should be evaluated for remaining coating life) First-stage buckets that were not recoated at the hot-gas-path inspection should be replaced
- Bearing liners and seals are inspected for clearance and wear
- Inlet systems are inspected for corrosion, cracked silencers, and loose parts
- Exhaust systems are inspected for cracks, broken silencer panels or insulation panels
- Check alignment - gas turbine to generator/ gas turbine to accessory gear

6 5 6 Parts and Manpower Planning

Parts Planning

Lack of adequate on-site spares can have a major effect on plant availability Therefore, prior to a scheduled disassembly type of inspection, adequate spares should be on site A planned outage such as a combustion inspection, which should only take two to five days, could take weeks

Typical expectations for estimated repair cycles for some of the major components are shown in **Figure 6-61** Many engineering judgments are factored into this table The actual repair and replacement cycles for any particular gas turbine should be based on the user's operating procedures, experience, maintenance practices and repair practices The maintenance factors previously described can have a major impact on both the component repair interval and service life For this reason, the intervals shown in the Table should be used only as guidelines for long range parts planning Operating factors and experience gained during the course of recommended inspection and maintenance procedures will be a more accurate predictor of the actual intervals

MS6001B/MS7001EA/MS9001E

	Hours	
	Repair Interval	Replace Interval
Combustion Liners	CI	5 (CI)
Transition Pieces	CI	6 (CI)
Fuel Nozzles	CI	3 (CI)
Cross Fire Tubes	CI	3 (CI)
1st Stage Nozzles	HGPI	2 (HGPI)
2nd-Stage Nozzles	HGPI	2 (HGPI)
3rd Stage Nozzles	HGPI	2 (HGPI)
1st Stage Buckets	HGPI *	2 (HGPI)/3 (HGPI)**
2nd Stage Buckets	HGPI	3 (HGPI)
3rd-Stage Buckets	HGPI	3 (HGPI)
Flow Divider (Distillate)	CI	3 (CI)
Fuel Pump (Distillate)	CI	3 (CI)

Operation/Maintenance/Repair in Accordance With GE Specifications and Instructions Is Key to Minimizing Repair and Replacement Costs

CI = Combustion Inspection Interval
HGPI = Hot Gas Path Inspection Interval
When Recoating Perform After One Hours-Based Hot Gas Path Interval
2 Hot Gas Path Intervals Without Recoat 3 Hot Gas Path Intervals With Recoat

Figure 6-61 Estimated Repair Cycles for Major Components

Manpower Planning

When significant premiums are placed on unit downtime, certain basic assumptions must be considered in planning maintenance These are primarily twofold ensure that a spare part is available for each item that will be inspected during the outage Even though planned times may be achieved in disassembly, an extended outage can still occur because of component distress observed after disassembly or some other unanticipated problem Also, employ the maximum number of people on the job when needed and reduce the number of people when needed Tasks can be expedited when experienced personnel are available

654

6 5 7 Inspection Intervals

Figure 6-62 lists the recommended combustion, hot-gas-path and major inspection intervals for current production GE turbines operating under ideal conditions of gas fuel, base load and water injection Considering the maintenance factors discussed previously, an adjustment from these maximum intervals may be necessary, based on the specific operating conditions of a given application Initially, this determination is based on the expected operation of a turbine installation, but this should be reviewed and adjusted as actual operating and maintenance data are accumulated While reductions in the maximum intervals will result from the factors described previously, increases in the maximum interval can also be considered where operating experience has been favorable

Type of Inspection	Hours/Starts	
	MS32/52/51 Upgrades	MS6B/7EA/7FA/9E/9FA
Combustion	12000/800	8000/800
Hot-Gas Path	Eliminated	24000/800
Major	48000/2400	48000/2400

Factors That Can Reduce Maintenance Intervals

- Fuel
- Load Setting
- Steam/Water Injection
- Peak Load T_F Operation
- Trips from Load
- Start Cycle
- HGP Hardware Design

Figure 6-62 Inspection Intervals

695

6 6 Gas Turbine Performance and Reliability

Gas turbine performance as defined here is concerned only with output and heat rate Standardized performance testing procedures have been developed by gas turbine manufacturers and by the American Society of Mechanical Engineers

Reliability as discussed here is the probability of a gas turbine not being forced out of service when the unit is needed Reliability is a measure of the time a unit would be forced off line as a result of component/system failures, whether the unit was operational or on reserve standby duty Reliability provides information on possible failure rates and mechanisms for the unit The information is then used to focus on specific problem areas in an attempt to improve overall unit/plant reliability In the following sections, factors affecting gas turbine reliability, performance, and performance improvements, emissions reduction, performance measurement and impact of operating mode on gas turbine performance and reliability are discussed

6 6 1 Factors Affecting Gas Turbine Reliability

Heavy duty gas turbine reliability has shown considerable improvement during the last two decades In achieving this improvement, several factors were taken into consideration These factors were based on operational experience gathered over several years and analyzed to determine the root cause of low reliability in gas turbine power plants

Analysis of gas turbine operational data indicated that the major factors causing forced outages and thereby adversely affecting gas turbine reliability included

- Control system failures
- Failure of critical sensors
- Failure of accessory drive gear and/or related components
- Failure of hot gas path components
- Failure of load gear
- Failures associated with starting equipment

Control system failures, failures of critical sensors and accessory drive gear components have been addressed by using redundant components For control systems, a triple redundant architecture is used that allows the system to remain in operation even if one of the microprocessors is out of service The design also allows on-line maintenance and replacement of microprocessors and other components without gas turbine shutdown Similarly, critical sensors are triple redundant The use of triple redundant sensors provides for a high level of fault tolerance by enabling two out of three voting in software logic Two out of three voting ensures that one faulty sensor will not result in a false trip of the gas turbine

The problem of accessory drive gear and related component low reliability was addressed by eliminating the accessory drive gear By going from shaft driven accessories to independent electric motor driven accessories, gas turbine manufacturers have been able to remove another source of forced outages Motor driven accessories are located in separate compartments and redundant backups are also provided The redundant back-ups allow on-line maintenance and replacement of auxiliary equipment, contributing to a significant increase in operational reliability

Hot gas path components see some of the severest service conditions in gas turbines Use of new high temperature resistant materials, special ceramic coatings, and cooling techniques adapted from the aircraft industry have contributed to a reduction in reliability problems associated with hot gas path components

Load gears on large industrial gas turbines have been another cause of low reliability in gas turbines The load gears typically operated under very hot conditions and had to have a forced-feed lubrication system Load gears were primarily needed to step down the speed from the driver speed to the speed of the driven equipment Manufacturers have eliminated the need for load gears by designing the turbines to operate at synchronous speeds of 3,600 rpm

Starting equipment failures were more prevalent with diesel engine starting devices, although electric motor starting devices also had their share of problems One source of problem associated with electric motor starting devices was the restriction on number of starts per hour, and the need to cool down the armature before attempting additional starts

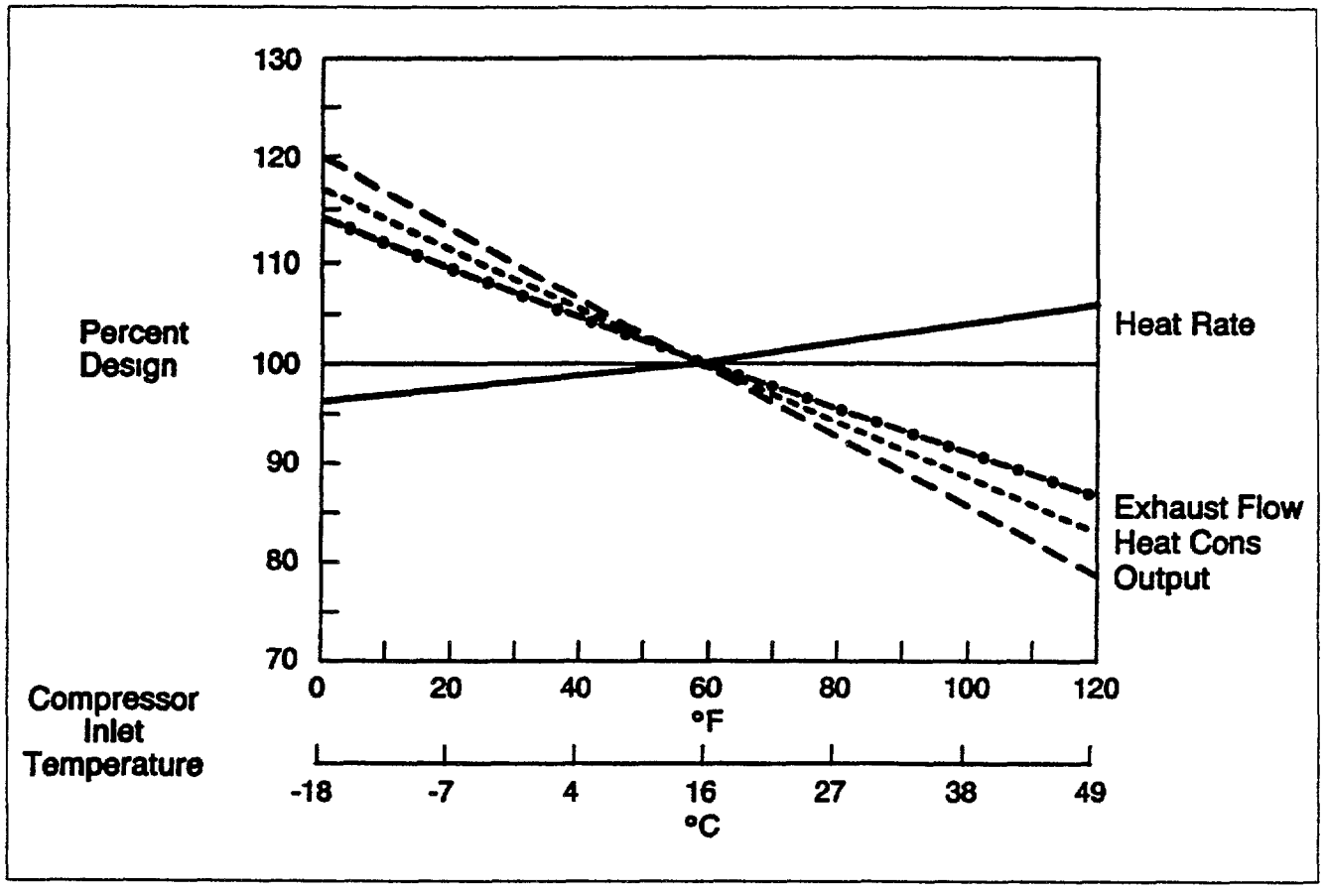

Figure 6-63 Gas Turbine Output versus Air Temperature

The power and efficiency improvement with lowered air temperature is due to the fact that cold air is easier to compress to a given pressure ratio than hot air Compressing the air easier means that less power is required to drive the compressor for a given weight flow and pressure ratio The result of this is that more power is available to drive the main load

For this reason, intercoolers are often installed in systems which normally require high-pressure ratios By intercooling at one or more stages of the compression cycle, power requirements are substantially reduced

678

These limitations have been eliminated by adapting a static start system that uses the generator as a condenser to provide the starting torque for accelerating the gas turbine to firing speed and then to self-sustaining speed

6 6 2 Performance Improvements

The primary gas turbine performance factors over which turbine designers have an influence are the firing temperature (turbine inlet temperature), compression ratio, aerodynamic design of the compressor and turbine, and air/gas seal (leakage) clearances In recent years, advances in high temperature material technology, high temperature ceramic coatings and more effective turbine nozzle and blade cooling techniques, have increased turbine firing temperatures by an average of 300°F Even though the turbine firing temperature has increased by 300°F, lower average metal temperatures have been maintained Gas turbine efficiency and output is directly related to the turbine firing temperature Higher firing temperatures mean greater output and efficiency Better part load exhaust temperature control for optimizing combined cycle performance has resulted from the addition of modulating inlet guide vanes

Heavy duty gas turbine compression ratios have improved due to aerodynamic design of the compressor blades, and tighter running clearances between the stationary and rotating parts of the machine Improvements in the design of the seal between combustion liners and transition pieces has also contributed to improvements in compressor discharge pressure By using improved air/gas side seals, the leakage of air into the gas path has been minimized As a result, compressor discharge air does not bleed off into the gas flowpath and dilute its temperature

Capacity Improvement

Gas turbine power capability is strongly influenced by air temperature changes, as is shown in **Figure 6-63** for a single-shaft non-regenerative turbine

The increased mass flow of the colder air also increases the power capability of the turbine During cold weather operation, a load or turbine mechanical power limit may be reached before excessive turbine inlet or exhaust temperatures are encountered

Since a turbine's ability to generate power depends directly on its mass flow (weight flow) (providing other conditions are held constant) a decrease of air inlet density will decrease turbine power A turbine will have less power capacity at higher elevations where the air is thinner than an identical turbine at sea level

In addition to mass flow, the power developed by a turbine also depends on turbine inlet temperature often known as "firing" temperature The higher that the firing temperature is maintained, the more power the turbine develops Material high-temperature strength characteristics are what impose maximum allowable temperature limits, the higher the temperature the shorter the life of the hot parts being the general rule

While the single-shaft type machine is simple, powerful, and good on thermal efficiency, some applications require even more flexibility and higher thermal efficiencies For this reason, the two-shaft machine was developed The two-shaft machine has the load turbine and the compressor turbine on separate shafts with a controllable angle nozzle in between Some of the advantages of this type of construction are

- Better part load thermal efficiency
- Ability to run compressor and load shafts at different speeds so that best results can be achieved
- Lower starting power required

Higher overall thermal efficiencies may be achieved by the addition of a regenerator In the regenerator, turbine exhaust gas is allowed to give up some of its heat to compressor discharge air The heat that would otherwise be wasted is returned to the cycle resulting in an increase in thermal efficiency and reduced fuel requirements

Some additional methods to increase power and efficiency are

- Precooling the compressor inlet air by evaporative cooling or other means
- Intercooling during compression
- Injection of steam or water in the cycle to increase mass flow
- Reheating turbine gas by fuel addition between expansion stages

6 6 3 Combustion System Improvements

Combustion system improvements include the ability to fire harder in the combustion cans (higher firing temperatures), improvement in seal design between combustion liners and transition pieces, improved air flow from compressor outlet to combustion cans and from combustion cans to the first stage nozzles, improvement in interstage seal design, and tighter running clearances in the gas turbine

With these improvements, the net output of the gas turbine can be increased by 10% to 40% over design output since the gas turbine exhaust temperature stays the same Another benefit of combustion system improvements has been the decrease in frequency of various gas turbine inspections The decrease in inspections is made possible because the average metal temperature of the turbine nozzles and blades stays the same as before as a result of improved cooling techniques

6 6 4 Emissions Reductions

Over the last several years, there has been a dramatic increase in regulatory requirements for low NO_x emissions and other pollutants from gas turbines Turbine manufacturers presently use three different methods to control gas turbine emissions

- Injection of a diluent such as water or steam into the burning zone of a conventional (diffusion flame) combustor
- Catalytic clean-up of NO_x and CO from the gas turbine exhaust (usually used with the other two methods)
- Design of the combustor to limit the formation of pollutants in the combustion zone

The third method includes both catalytic combustors and "Dry Low NO_x" or DLN combustors which use lean-premixed combustion technology

Single nozzle combustors are generally limited in their ability to reduce NO_x levels below 42 ppmvd Consequently, gas turbine manufacturers have recently developed multi-nozzle quiet combustors that are capable of achieving NO_x levels of 25 ppmvd using either water or steam injection Reduced combustion inspection intervals and reduced combustion hardware life are undesirable side effects of water or steam injection into gas turbines

Selective Catalytic Reduction (SCR) is a method for converting NO and NO_2 in the gas turbine exhaust stream to molecular nitrogen, water and oxygen by reacting NO_x with ammonia in the presence of a catalyst SCR can remove up to 90% of the NO_x contained in the gas turbine exhaust stream SCR systems are sensitive to fuels containing more than 1,000 ppm of sulfur (light distillate may contain up to 0 8% sulfur) This is because the sulfur poisons the catalyst used in the SCR's, and the ammonia reacts with sulfur in the presence of the catalyst and forms ammonium bisulfate Ammonium bisulfate is extremely corrosive specially near the discharge of a heat recovery steam boiler

Dry Low NO_x Combustors

To overcome the limitations of the NO_x reduction systems described above, turbine manufacturers have developed dry low NO_x combustion systems The heart of the dry low NO_x system is a two staged premixed combustor designed for use with natural gas fuel and capable of operation on liquid fuel The main components of the two stage premixed combustor are

- Fuel injection system
- Liner
- Venturi
- Cap/centerbody assembly

The components are arranged to form two stages in the combustor, **Figure 6-64** In the premixed mode, the first stage serves to thoroughly mix the fuel and air and to deliver a uniform, lean, unburned fuel-air mixture to the second stage A typical dry low NO_x combustion system operates in four distinct modes during natural gas operation

1	Primary	Ignition, acceleration, and operation to 20 percent load (fuel to first stage only)
2	Lean-Lean	20 percent to approximately 40 percent load (fuel to both stages, flame in both stages)
3	Secondary	Staging at 40 percent load (fuel to second stage only)
4	Premixed	40 percent to 100 percent load (fuel to both stages, flame in second stage only)

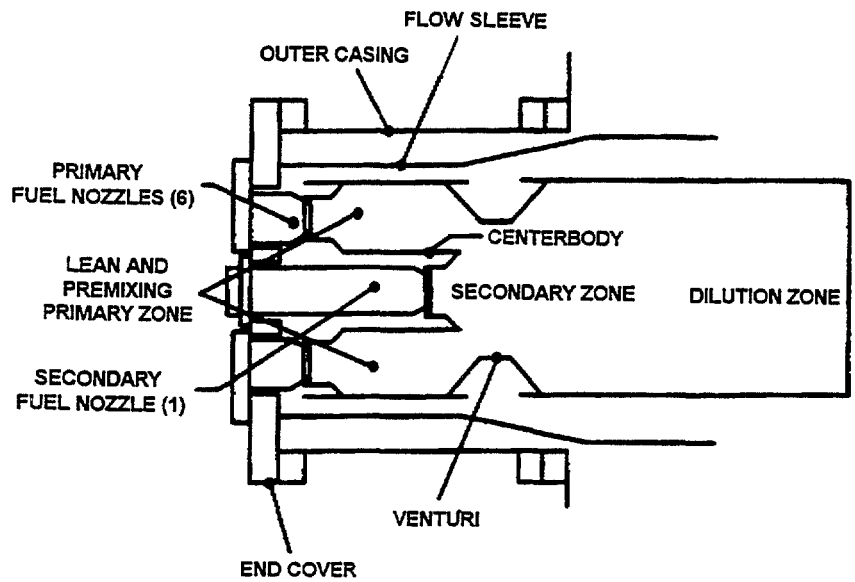

Figure 6-64 Dry Low NO_x Combustor

The premixed two stage combustors can consistently maintain NO_x emissions below 40 ppmvd on natural gas

6 6 5 Control System Reliability Improvements

Historically gas turbine control systems demonstrated poor reliability and were a primary reason why these machines were not accepted in power generation applications on a large scale Starting in the late 1970's, gas turbine manufacturers made a concerted effort to improve control system reliability and thus gain greater acceptance for their machines for base load power generation applications

Current gas turbine control systems employ digital technology including triple redundant microprocessors, two-out-of-three voting redundancy on critical control and protection parameters, and software implemented fault tolerance Critical control and protection sensors are triple redundant and voted by all three control microprocessors

System output signals are voted at the contact level for critical solenoids, at the logic level for the remaining contact outputs, and at three coil servo valves for analog control signals thereby maximizing both protective and running reliability An independent protective module provides triple redundant hardwired detection and shutdown on overspeed together with detecting flame

Backup power supplies are also provided as well as an auxiliary display that allows the operator to bring up process parameters when the main display is out of service Built-in diagnostic capabilities are providing for troubleshooting and can identify both panel and sensor faults These faults are identified down to the board level for the panel and to the circuit level for the sensor or actuator components The ability to replace components on-line is built into the panel design, and is built in typically for those sensors where system access and physical replacement are feasible

6 6 6 Impact of Operating Mode on Gas Turbine Heat Rate, Reliability, and Performance

Maintenance costs, reliability and availability are the most important considerations for an equipment owner For an equipment owner to maximize his return on the investment, the owner must develop an understanding of the relationship between plant operating modes, maintenance practices, and equipment performance and availability

The major factors that affect equipment performance and plant availability are

- Quality of fuel
- Firing temperature
- Steam/water injection
- Cyclic effects
- Air quality

Among these, the effects of cycling operation are those directly related to operating mode For cyclic-related effects, a single trip from full load produces a parts life effect equal to eight normal start/stop cycles This is due to the additional thermal strain that is produced

in blades and nozzles during a trip condition Higher strain range means fewer cycles before cracking Similarly, emergency starts where units are brought up from standstill to full load in less than five minute have a parts life effect equal to 20 normal start cycles A normal start with fast loading produces a maintenance factor of only two

In summary, the failure mechanisms associated with different service-duties include thermal-mechanical fatigue, high cycle wear, rubs/wear, and foreign object damage Thermal-mechanical fatigue would be the predominant mechanism for peaking machines while creep, oxidation, and corrosion would be the dominant limiters for continuous duty machines

-105

Combined Cycle Principles Course Module 7

Plant Controls

FCS
Fossil Consulting Services, Inc.

Columbia, Maryland

706

TABLE OF CONTENTS

Section		Page
7 0	COMBINED CYCLE PLANT CONTROLS	1
7 1	Gas Turbine Controls	1
7 1 1	Controls Overview	1
7 1 2	Control Function	2
7 1 3	Alarms and Protection	5
7 1 4	SPEEDTRONIC Hardware and Software	6
7 2	Heat Recovery Steam Generator Controls	13
7 2 1	Principals of Operation	13
7 2 2	Control Philosophy and Application	16
7 3	Steam Turbine Controls	19
7 3 1	Overview	19
7 3 2	Control Purpose and Function	20
7 3 3	Alarm and Protection	21
7 4	Generator Controls	24
7 4 1	Electrical Generator Control System	24
7 4 2	Generator Operational Limitations	32
7 4 3	Generator Capability Curves	33
7 4 4	Generator Protection	37
7 5	Plant Digital Control System	42
7 5 1	Control System Overview	42
7 5 2	Basic System Function and Principles	44
7 5 3	Operator Interface and Functions	47
7 5 4	DCS Functions and Operation	50
7 5 5	Types of Displays	56

7 0 COMBINED CYCLE PLANT CONTROLS

7 1 Gas Turbine Controls

For the purposes of this module, it is assumed that gas the turbine utilizes a digital control system known as the G E SPEEDTRONIC Mark V This control system offers complete control, protection, and monitoring functions of the gas turbine and its auxiliaries during all stages of operation This includes sequencing the startup, operation, and shutdown of the unit, NO_x emissions monitoring, and firing rate, all in an integrated fashion This section is provided to give an overview of the SPEEDTRONIC Mark V control system For detailed information on the construction or operation of the gas turbine, refer to Module 5 of this course, Gas Turbine

7 1 1 Controls Overview

The Mark V control system is a triple redundant, sixteen-bit, microprocessor based digital control system designed for G E gas turbines The Mark V combines electronic hardware and software with the gas turbine electro-hydraulic control system to provide control, protection, trip, and operator interface functions The system employs two-out-of-three voting redundancy on critical control and protection parameters, and Software Implemented Fault Tolerance (SIFT) to differentiate signals of good and bad quality

The Mark V control system is designed to fulfill all gas turbine requirements, including

- Control of fuel supply for speed or load control
- Control of temperatures under start-up or rated load conditions
- Control of air supply through the operation of inlet guide vanes (IGVs)
- Control of emissions using steam injection, water injection, or IGVs
- Control of low NO_x fuel staging for combustion
- Monitoring all gas turbine auxiliary systems
- Alarming all off-normal conditions associated with gas turbine and auxiliaries

7 1 2 Control Function

The Mark V controls all aspects of gas turbine and auxiliary equipment operation This control system ensures that the gas turbine and all of its auxiliary subsystems are operated in a safe and reliable manner and protects against unsafe and adverse operating conditions The primary control functions provided include

- Speed and Load Control
- Overspeed Control
- Synchronizing
- Flame Scanners
- Emissions Control
- Operating Sequencing

Speed and Load Control

Speed and load control acts to control the fuel flow under part or full load conditions to satisfy the needs of the governor The unit temperature limits the fuel to a maximum consistent flow while achieving rated firing temperatures The inlet air guide vanes are modulated to optimize part load heat rates

Overspeed Control

Overspeed control is provided with two sets of triple redundant, separate magnetic speed pickups The first set of magnetic pickups provide the SPEEDTRONIC turbine speed, while the second set of pickups provide overspeed protection The SPEEDTRONIC cards are provided with standard on-line and off-line, primary and emergency overspeed tests

Synchronization

Synchronization of the gas turbine generator is accomplished through the regulation and monitoring of generator voltage and frequency output to the system To obtain synchronous power, the generator voltage and frequency output is matched to the grid and the output breaker is automatically closed When matching the line frequency, a small positive differential is provided to prevent the generator breaker from tripping on reverse power at breaker closure

Flame Scanners

Flame scanners supply the SPEEDTRONIC with positive indication of flame propagation or flame failure In the event of flame failure, the gas turbine will shutdown immediately until the starting sequence can be restarted

Emissions Control

Emissions control using dry low NO_x combustion techniques rely on multiple combustion staging to optimize fuel/air ratios and achieve a thorough premixing in various combinations, depending on the firing temperature The emissions control system regulates the fuel division among the combustion stages, while monitoring the actual combustion system to ensure complete compliance of EPA regulations

Steam or water injection are provided to the combustion chambers to assist in limiting the emission of nitrogen oxides (NO_x) Steam or water injection is the most widely used method for reducing NO_x formation in the combustor Simply, steam or water is injected into the combustor flame zone to "cool" the flame The turbine thermal efficiency is reduced based on the additional amount of fuel required to heat the steam to the temperature of the combustors Consequently, turbine output is increased because of the additional mass flow through the turbine

Operating Sequence

The SPEEDTRONIC provides complete operational sequencing to bring the unit from standstill to full load and from full load to standstill

The startup control is an open loop system that increases the fuel stroke reference as the turbine startup sequences progresses to pre-assigned points These points include startup, purge coast down, firing time, and acceleration During startup, the fuel stroke reference algorithms in the SPEEDTRONIC limit the amount of fuel admitted to the combustion chamber until air flow is established to handle additional fuel After fuel is admitted to the combustion chambers, the acceleration control adjusts the fuel stroke reference to the rate of change of the gas turbine speed to reduce thermal shock to the hot gas path equipment

After warm-up, the fuel limit raises to accelerate the gas turbine to the maximum fuel limit Once the turbine has reached full operational speed, the generator breaker is closed and the fuel stroke reference is maintained at its maximum limit

The speed reference signal is calculated by ramping or stepping to assigned levels as defined in the algorithms When the gas turbine is in its preset starting sequence, the speed levels are predetermined to accelerate the machine up to its operating speed, 3600 rpm After the machine is on governor control, speed can be raised or lowered by operator selections and feedback in the speed/load algorithms Turbine speed is monitored by magnetic pickups mounted near a 60-tooth wheel attached directly to the turbine shaft These pickups generate voltage pulses as the teeth of the wheel pass under them, giving the SPEEDTRONIC its speed inputs for speed control

The speed control fuel stroke reference (FSR) algorithm is used to determine the amount of fuel that is required for firing the gas turbine, as long as the FSR is between the minimum and maximum fuel gas supply limits

During the startup sequence, turbine speed is raised to approximately 100 3% The synchronizing fuel stroke reference overrides the speed control FSR and governs the turbine speed based on full speed, no load (FSNL) setpoint After the command to close the generator breaker is given (generator to line phase differential and slip are at the predetermined setpoint), the synchronizing fuel stroke reference ramps up until the governors FSR is overridden by speed control

Temperature control is used to limit the turbine firing temperature by regulating fuel flow The firing temperature is the hottest temperature in the gas turbine and the most difficult to monitor due to heat and thermal gradients But, turbine exhaust temperature is more easily measured and is proportional to the firing temperature

The Mark V calculates the temperature control reference as a function of compressor discharge and the FSR The temperature control reference takes into consideration the ambient temperature, firing temperature, and barometric pressure All of these variables can effect the gas turbine firing temperature While increasing

711

the temperature can improve the turbine efficiency, the machine must not be overfired Therefore, the temperature control reference acts to limit the firing of the gas turbine and is considered in the FSR to the gas turbine combustors

The Mark V offers speed protection using additional magnetic pickups directly attached to the shaft Algorithms monitor the high pressure set speed and the low pressure set speed and compare the speeds with the setpoints to establish the speed limit If the speed exceeds the setpoint, the logic trips the gas turbine The trip will remain in place until the Operator manually resets the latch at the SPEEDTRONIC interface

7 1 3 Alarms and Protection

The SPEEDTRONIC has a master protection circuit (called the "4" bus) that provides complete protection functions using inputs from the <R>, <S>, and <T> controllers Any trip command issued by the controllers will de-energize a separate relay for each controller A two-out-of-three voting logic is performed by contacts to decide whether the master relays should be energized or de-energized The voting is performed by the hardware, rather than the software, to ensure that no single program or device contains a single point failure and ensures that the final component in the circuit has a predictable failure mode, i e de-energize a relay

The SPEEDTRONIC provides specific protective logics and circuitry that are described in more detail in module 5 of this course, Gas Turbine These are

- Flame Detection
- Overspeed Detection
- Starting Device Bog Down Detection
- Exhaust Overtemperature Protection
- Combustion Monitor
- Wheelspace Temperature Monitor
- Vibration Protection

Alarms

Alarms are typically indicated at the bottom of each display On the "blue" bar, the three most recent and unacknowledged alarms are indicated, with the date, time, status, drop number, and alarm message

Alarms for the gas turbine are generated by the SPEEDTRONIC based on inputs from the hardware and software The alarms list, containing up to 512 diagnostic messages, is directly associated with the control sensors and actuators

7 1 4 SPEEDTRONIC Hardware and Software

Similar to the DCS, the Mark V is equipped with both hardware and software Software components are not often thought of in the same context as hardware because, in general, a software component is designed to provide a certain function

Primary Operator Interface

The Operator's primary equipment consists of a color monitor, keyboard, cursor positioning device, and printer Typically located at the control compartment, it may be connected to the SPEEDTRONIC Mark V control panel through an ARCnet cable

The primary operator interface may be used to control up to eight gas and or steam turbines, with the operator specifically calling up the various units The primary operator interface is used to command the gas turbine, for example START, STOP, COOLDOWN, AUTO, RAISE SPEED, or RAISE LOAD The Operator may choose from a number of pre-defined, and user-configured displays from the main menu It should be noted that the primary operator interface performs no control or protection functions, but only serves as a means of issuing commands to the Mark V control panel and monitoring unit operation

Backup Operator Interface

A backup operator interface is typically provided on the door of the Mark V control panel The backup operator interface is typically used as a backup means of control in the event of a loss of communications between the Primary Operator Interface and the Mark V

Gas turbine commands may be issued at any time from the backup operator interface regardless of the status of the Primary Operator Interface and its communication link

Main Menu

The main menu, illustrated in **Figure 7-1**, consists of displays that an Operator may use To access the main menu from any display or menu, the ESC key on the keyboard is pressed To view one of the displays listed, point and click on the desired display

Main Display

The main display, illustrated in **Figure 7-2**, is intended to be the primary display that the Operator normally monitors The main display is accessed by clicking the MAIN DISPLAY target below the alarm window The Main Display may be user defined or animated The main display shows all key turbine parameters which the Operator needs to observe and the main commands necessary to operate the turbine and generator

Supervisory Features

The SPEEDTRONIC has several features which permit certain access to the program using passwords In order to modify a control constant or force a logic point, the user must first gain access to the program by entering the proper password An administration display is provided to enable and disable various individuals or job categories from the logic The password administration display is illustrated in **Figure 7-3**

ULTRA_SYSTEMS MAIN MENU
UNIT 51 Page 1 25-FEB-1993 19 28 17

POINT AND CLICK ON THE DESIRED DISPLAY

--- CONTROL DISPLAYS ---
Control Mode
Pre-Roll Warming
Speed Setpoint
Load / Load Limit
Megawatt Control
IPC and IPL
Intercept Valves
Exciter Interface
Auto Synchronizing
On-Line Valve Tests
On-Line Tests
Off-Line Tests
Turning Gear Interface

--- MOV INTERFACE ---
Stop Valve Drains
Reheat Stop Valve Drains
Steam Seal & Misc

--- DISPLAY PROGRAMS ---
User Defined Display
Logic Forcing Display
Pre-vote Data Display
Diagnostic Alarms

--- DEMAND DATA DISPLAYS ---
Trip Logic
Speed Signals
Proximitor Monitoring
4-20mA Inputs
Bearing Temp Monitoring
RTD Monitoring
TC Monitoring
MOV's - General Info
Trip History Display

EXIT MENUS | NEXT PAGE | HEADER DISPLAY | MAIN DISPLAY

ULTRA_SYSTEMS MAIN MENU
UNIT 51 Page 2 25-FEB-1993 19 34 22

POINT AND CLICK ON THE DESIRED DISPLAY

--- UTILITY PROGRAMS ---
Data
Spy
Timeset
Unit Card Identification
Terminal Interface Monitor
View Image
Data Logger
Active Rung Display
DIAGC

--- ADMINISTRATION TOOLS ---
Password Administration
Synonym Administration

--- CONFIGURATION PROGRAMS ---
Control Sequence Editor
I/O Configuration Editor
Control Constants Adjust
EEPROM Downloader
Valve Calibration

Control Sequence Compiler

Control Sequence Documenter
Note Will take 20 min.

EXIT MENUS | PREV PAGE | NEXT PAGE | HEADER DISPLAY | MAIN DISPLAY

Figure 7-1 Main Menu

715

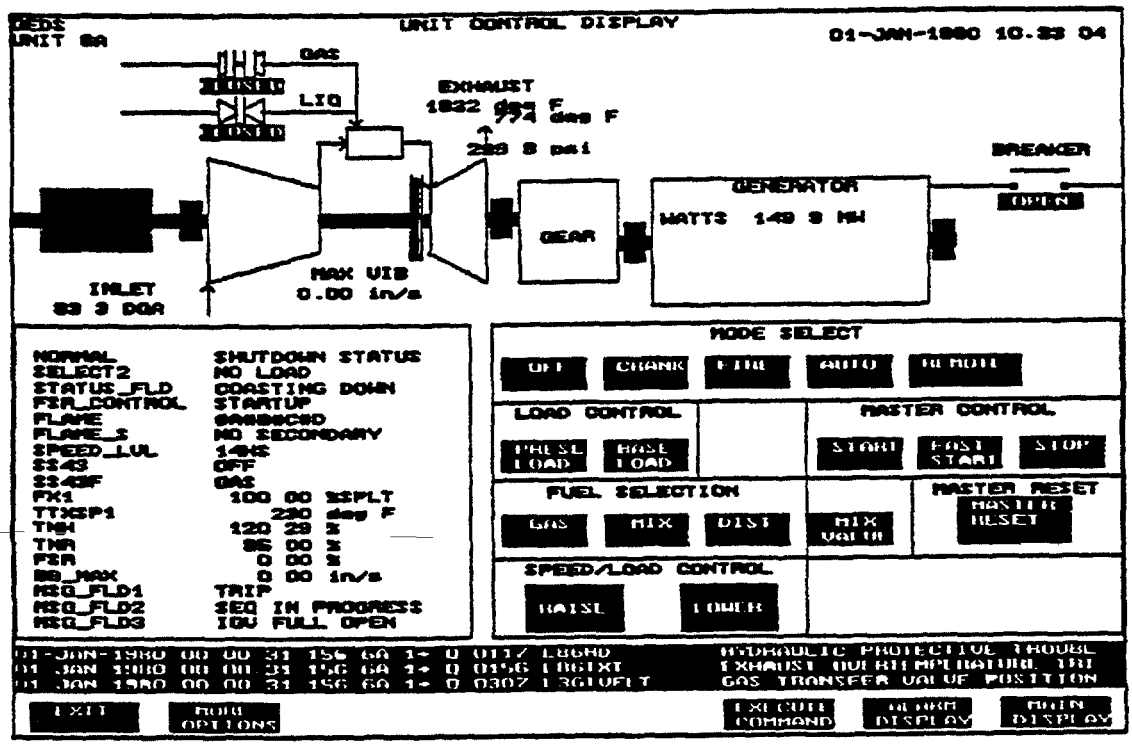

Figure 7-2 Main Display

716

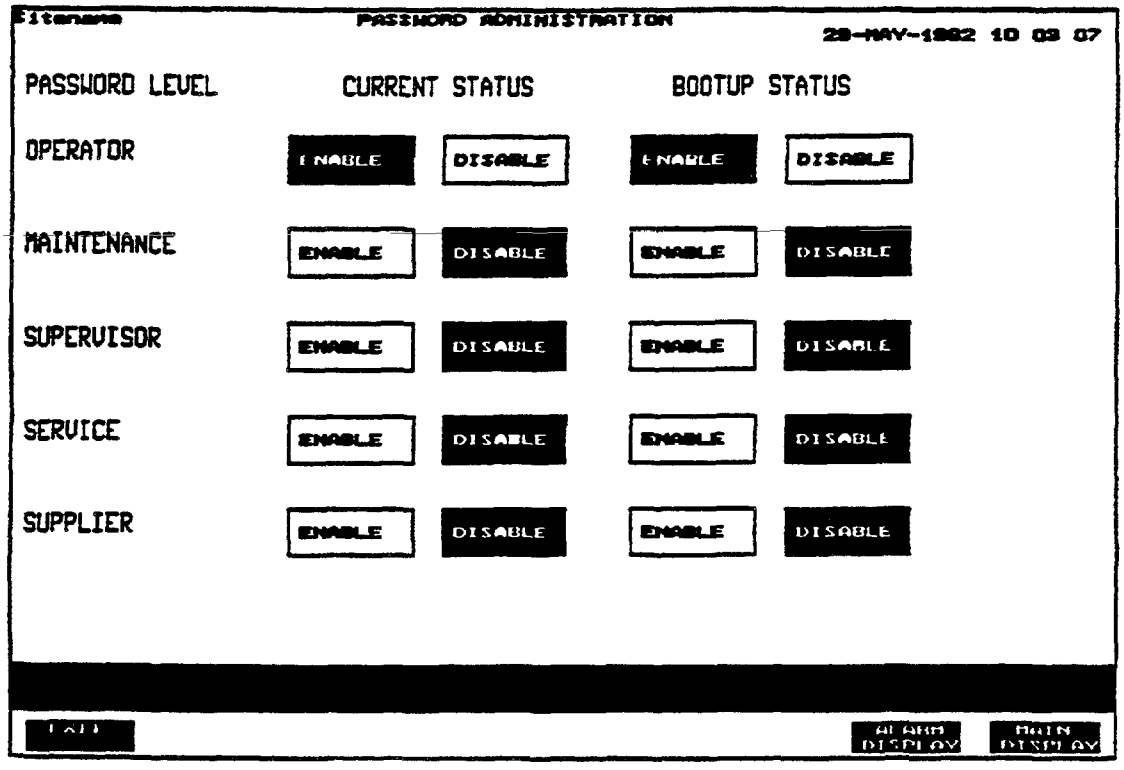

Figure 7-3 Password Administration Display

717

Common Display Fields

The common elements of each display include the message field, the alarm window, and the display targets

Display Message Field

The area located at the top of the screen is used to give the Operator information about the display being viewed, including but not limited to

- Site Name
- Display Group / Menu Name
- Date and Time
- Current Display Definition

Alarm Window

The "blue bar" located at the bottom of each screen is the alarm window This window provides the first three unacknowledged alarms, with date, time, alarm status, and acknowledgement status

Display Targets

Below the alarm window, as many as eight targets are provided These target have functions which may be selected by pointing and clicking on them or by selecting a function key Typically, two display targets, HELP and MAIN DISPLAY, are found on each display Additionally, an ALARM DISPLAY target is available on every menu or display except the alarm display itself

A user-defined display showing each of these items is shown on **Figure 7-4**

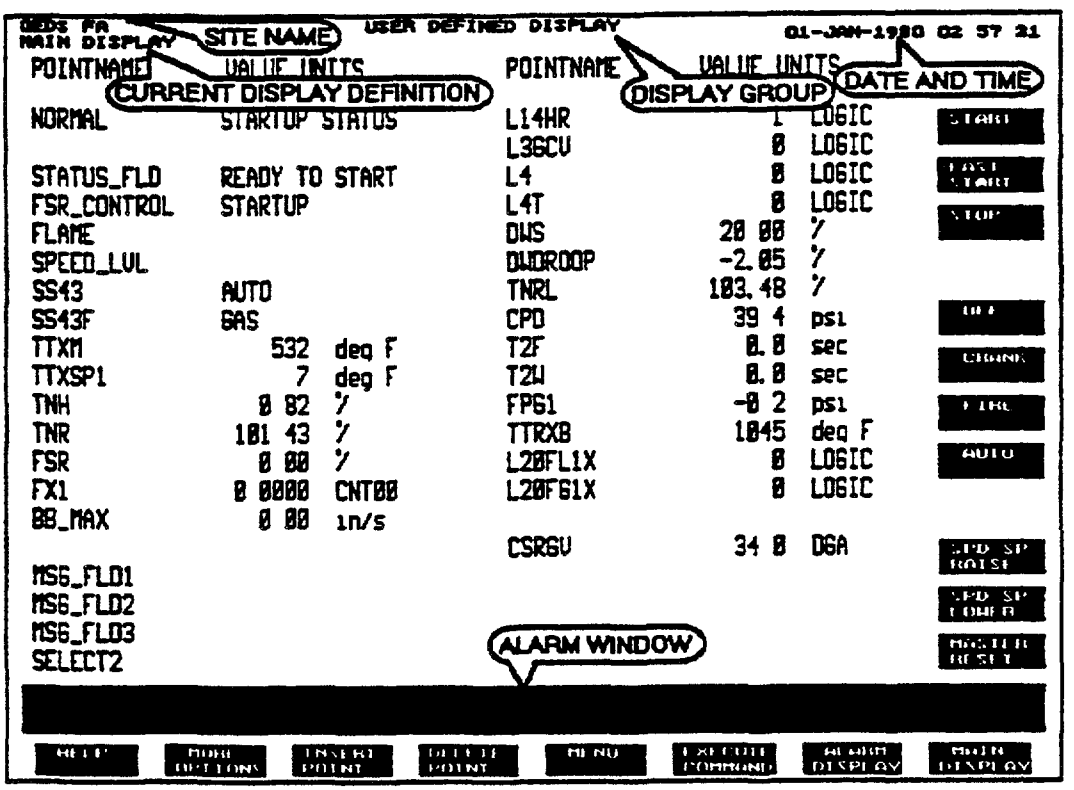

Figure 7-4 User-Defined Display

719

Alarm Display

The alarm display, illustrated in **Figure 7-5** lists all of the device alarms Alarms are listed on the display with the most recent alarm on the top of the list When an alarm condition is annunciated, it also appears in the blue Alarm Window of any display

The information usually displayed with each alarms is

- Date/Time
- Unit Number/Designation
- Alarm Status Flag ("1" indicates the alarm condition exists and "0" indicates the alarm is cleared and the message may be reset)
- Alarm Acknowledgement Status

Trip Log Display

The Trip Log Display, illustrated in **Figure 7-6** assists in the evaluation of circumstances which lead to turbine trip events by providing a chronological record of relevant data gathered by the Mark V control panel When accessed, the trip log allows the user to view, save, and print turbine trip data

7 2 Heat Recovery Steam Generator Controls

This section is provided to give an overview of the main HRSG controls, that are typically implemented through the DCS For detailed information on the construction and operation of the HRSG, refer to Module 5 of this course, Heat Recovery Steam Generator

7 2 1 Principals of Operation

The HRSG utilizes the heat from the combustion turbine exhaust to preheat feedwater and to generate steam Heat transfer is accomplished within the various modules of the HRSG, including a feedwater heater, economizers, H P evaporator, superheaters, and reheaters

-120

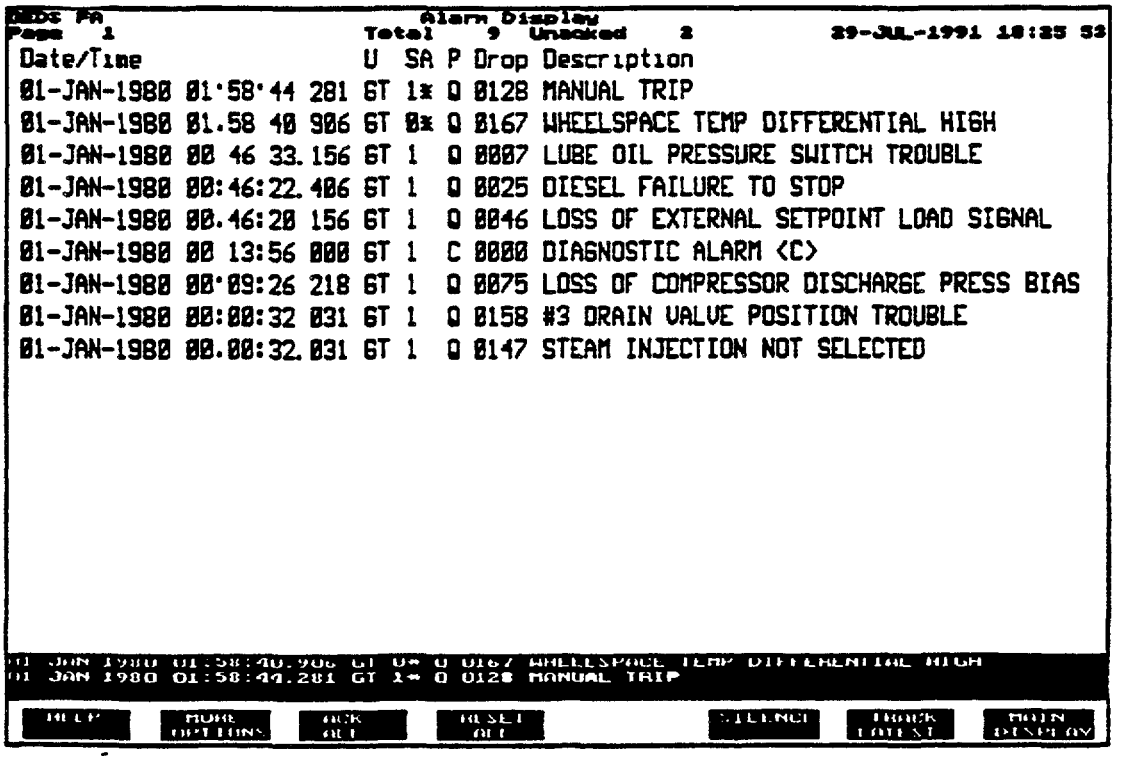

Alarm Display

Page 1 Total 9 Unacked 2 29-JUL-1991 18:25 53

Date/Time	U	SA	P	Drop	Description
01-JAN-1980 01:58:44 281	GT	1*	Q	0128	MANUAL TRIP
01-JAN-1980 01.58 40 906	GT	0*	Q	0167	WHEELSPACE TEMP DIFFERENTIAL HIGH
01-JAN-1980 00 46 33.156	GT	1	Q	0007	LUBE OIL PRESSURE SWITCH TROUBLE
01-JAN-1980 00:46:22.406	GT	1	Q	0025	DIESEL FAILURE TO STOP
01-JAN-1980 00.46:20 156	GT	1	Q	0046	LOSS OF EXTERNAL SETPOINT LOAD SIGNAL
01-JAN-1980 00 13:56 000	GT	1	C	0000	DIAGNOSTIC ALARM <C>
01-JAN-1980 00:09:26 218	GT	1	Q	0075	LOSS OF COMPRESSOR DISCHARGE PRESS BIAS
01-JAN-1980 00:00:32 031	GT	1	Q	0158	#3 DRAIN VALVE POSITION TROUBLE
01-JAN-1980 00.00:32.031	GT	1	Q	0147	STEAM INJECTION NOT SELECTED

01 JAN 1980 01:58:40.906 GT 0* Q 0167 WHEELSPACE TEMP DIFFERENTIAL HIGH
01 JAN 1980 01:58:44.281 GT 1* Q 0128 MANUAL TRIP

HELP | MORE OPTIONS | ACK ALL | RESET ALL | SILENCE | TRACK LATEST | MAIN DISPLAY

Figure 7-5 Alarm Display

721

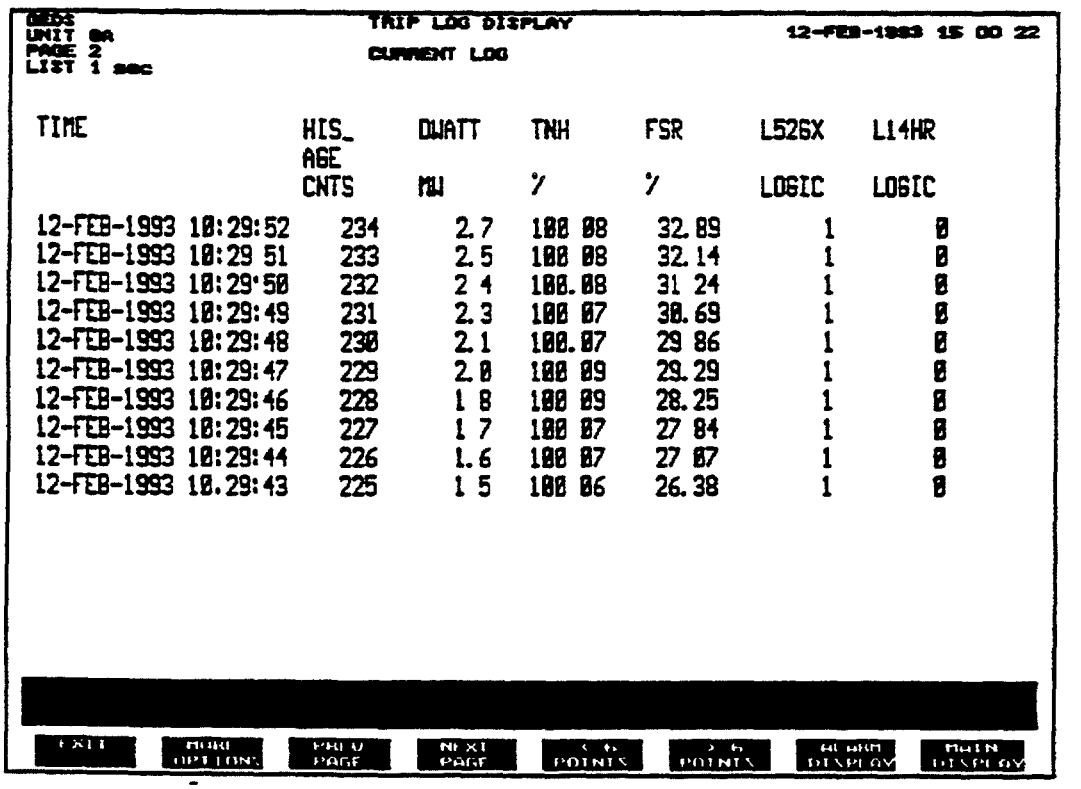

GEDS
UNIT 8A
PAGE 2
LIST 1 sec

TRIP LOG DISPLAY
CURRENT LOG

12-FEB-1993 15 00 22

TIME	HIS_ AGE CNTS	DWATT MW	TNH %	FSR %	L52GX LOGIC	L14HR LOGIC
12-FEB-1993 10:29:52	234	2.7	100 08	32.89	1	0
12-FEB-1993 10:29 51	233	2.5	100 08	32.14	1	0
12-FEB-1993 10:29'50	232	2 4	100.08	31 24	1	0
12-FEB-1993 10:29:49	231	2.3	100 07	30.69	1	0
12-FEB-1993 10:29:48	230	2.1	100.07	29 86	1	0
12-FEB-1993 10:29:47	229	2.0	100 09	29.29	1	0
12-FEB-1993 10:29:46	228	1 8	100 09	28.25	1	0
12-FEB-1993 10:29:45	227	1 7	100 07	27 84	1	0
12-FEB-1993 10:29:44	226	1.6	100 07	27 07	1	0
12-FEB-1993 10.29:43	225	1 5	100 06	26.38	1	0

Figure 7-6 Trip Log Display

722

The heat exchanger segments of each section are arranged to take maximum advantage of the temperature differences between the exhaust gas and tube side temperatures The low pressure section serves as a feedwater heater for the deaerator The deaerator provides a positive suction head to the boiler feedwater pumps The high pressure section produces superheated steam to drive the H P steam turbine, while the reheaters provide superheated steam to the L P turbine

The HRSG is arranged for horizontal gas flow across multiple banks of finned, vertical tubes The pressure parts are internally insulated and are completely free to expand, independently of the outer casing structure The outer casing serves as a high pressure boundary for the exhaust gases and is completely welded and isolated from the high temperature exhaust gas by internal insulation

7 2 2 Control Philosophy and Application

Operation and control of the HRSG includes the coordinated operation of each section of the HRSG Operation of the HRSG consists of

- Maintaining proper drum level
- Monitoring superheater output
- Maintaining proper superheated steam temperature
- Operation of vents and drains

Drum Level/Feedwater Control

Feedwater is supplied to the steam drum by the boiler feed pumps During low load and startup conditions, drum level is controlled by single element level controller, based on drum level only When the steam flow from the drum increases to a preset value, the DCS automatically switches to 3-element level control, 1) feedwater flow, 2) drum level, and 3) steam flow The method of level control, single element or 3-element, is displayed at the level control valve MA Stations on the DCS

The instruments which provide input signals to the DCS for controlling the position of Drum Level Control Valves and to initiate drum level alarms include

- Drum Level transmitters which are pressure compensated by Pressure Transmitters
- Feedwater Flow Transmitters which are temperature compensated by Feedwater Temperature Elements
- Steam Flow Transmitters which are pressure compensated by Pressure Transmitters and temperature compensated by Temperature Elements

Maintaining proper steam drum level is a critical function and can not be overstressed An excessively high drum level will flood the moisture separators located within the steam drum, resulting in moisture carry over to the superheater and a steam turbine trip An excessively low drum level will result in decreased steam output, overheating of the economizer, evaporator, and superheater tubes and a combustion turbine trip

Drum pressure is a result of drum level combined with the generation of steam in the evaporators The drum pressure will fluctuate with changes of load demands on the steam system During a sudden steam load increase, drum pressure will decrease This will result in a false high level condition known as "swell " During a sudden decrease of steam demand, steam drum pressure will increase and result in a false low level condition known as "shrink " In some situations, the tuning of the steam drum level control loop may not respond quick enough to maintain proper drum level during such abnormal conditions In this event, the operator may be required to take MANUAL control of the level control valves

Steam Flow Control

Steam from the superheater is supplied to the steam header for use by the steam supply systems and by the steam turbine The control of steam flow from the superheater outlet is typically through a motor-operated stop check valve and steam stop valve The position of the valve motor operators is manually controlled from the Operator Keyboard at the DCS

During startup of the HRSG, the motor operators for the Stop Check Valve and the Steam Stop Valve are moved to the OPEN position before the steam drum begins to develop steam pressure As the HRSG heats up, steam will flow through the Stop Check Valve and begin to warm the steam header During this period of the startup, the combustion turbine is maintained at minimum load Once the HRSG and the Main Steam System are completely heated and pressurized, combustion turbine load is increased to meet the prestart steam requirements of the steam turbine

If the steam header is already pressurized by the auxiliary boiler prior to HRSG startup, the disk of the Stop Check Valve will remain seated due to the already pressurized steam header Once the steam drum increases to a pressure equal to the steam header, the check valve will slowly open and steam will begin to flow through the superheater from the drum It is very important that the drum level be closely monitored during this transition

Maintaining Proper Steam Temperature

Steam from the steam drum must be superheated to a controlled temperature before entering the steam turbine To accomplish this, steam from the drum is routed through a superheater, where its temperature is increased above the saturation point This initial superheating of the steam brings the steam temperature and pressure to the correct conditions before the admission of spray water (attemperation) which provides downstream temperature control Spray water is admitted into the attemperator based on the steam outlet temperature from the H P Superheater Typically, a motor operated block valve and temperature control valve are provided to maintain the correct steam temperature to the steam turbine

Permissives are usually in place to prevent thermal shock to the system by not allowing the block valve to admit water to the attemperator while the spray valve is <u>already</u> open A close signal is given to the block valve if attemperator spray demand is small or steam flow is low

Operation of Vents and Drains

Each of the superheater and steam drum vent and drain motor-operated valves can be manually OPENED, STOPPED, CLOSED, placed in TAGOUT, or placed in AUTO from the DCS With each valve placed in the AUTO mode, the DCS will CLOSE Drum Vent Valves and OPEN Superheater Vent and Drain Valves when the steam drum pressure increases to between 25 - 30 psig At this stage of the HRSG startup, the superheater vents and drains are opened to maintain steam flow through the tubes to prevent overheating of the tubes Once the Steam Generation Section is on-line and developing significant steam flow, the superheater vents and drains are placed in MANUAL and CLOSED

7 3 Steam Turbine Controls

This section is provided to give an overview of the DEH control system For detailed information on the construction or operation of the steam turbine, refer to Module 3 of this course, Steam Turbine

7 3 1 Overview

To control the operation of the steam turbine, a DEH digital control system is provided The DEH system controls the steam turbine using a touch screen format, similar to the SPEEDTRONIC and the WDPF This system also communicates with the DCS through a network communications link, but actual algorithm and turbine control is accomplished using the DEH

In the DEH, there are a number of graphic pages, each of which is dedicated to perform a particular function or control specific equipment These include

- UNIT OVERVIEW
- FEEDBACK STATUS DISPLAY
- CONTROL MODE
- VALVE MODE
- CONTROL SETPOINT
- SET LIMITER

726

- INDUCTION/DESUPERHEAT MODE
- VALVE TEST/DISPLAY
- HYDROGEN SYSTEM
- TSI/BRG METAL, CONTROL START, GENERATOR, AND EXCITER TEMPS
- SEAL OIL SYSTEM
- REACTIVE CAPABILITY
- PRESTART AND PRESYNCH CHECKLISTS
- TURBINE ROLL
- WATER DETECTOR TEMPERATURE
- GENERATOR ANNUNCIATOR
- TRIP SYSTEM STATUS AND TESTS

7 3 2 Control Purpose and Function

Typically, the steam turbine system has four major subsystems, speed control, load control, flow control, and standby control

Speed Control

The speed control system uses three inputs The first input is the speed signal which comes from a speed transducer The other two inputs are setpoints that are operator selected, one for speed and the other for acceleration These controls are used only during startup The actual speed of the rotor is compared with an operator selected setpoint A speed error signal is generated that "tells" the turbine valves to open further The turbine is smoothly accelerated to the new setpoint where, since the speed and the setpoint are the same, the speed error signal is essentially zero When the turbine is synchronized, the speed setpoint is fixed at a fixed rate For a two pole machine, this speed is 3600 rpm

Load Control

The load control unit has several inputs, including the speed error signal from the speed control unit Those inputs are combined to calculate the valve position for the main steam valves During startup, load is controlled using the speed error signal

727

from the speed control unit The load control unit simply passes through the signal from the speed control unit to position the main steam valves

After the turbine is synchronized, the speed error signal is near zero, and the load setpoint and the loading rate setpoint are the principal inputs to the load control unit A loading rate setpoint is also selected The load control unit then generates a signal to open the main steam valves in an effort to reach the load setpoint

Flow Control

The flow control unit is made up of individual control loops for each of the controlling main steam valves The valve positioning signal from the load control unit is used to generate the current signal that positions the main steam valve The load control electronic circuit that compares the valve positioning signal from the load control unit with the actual valve position signal When there is a change in the valve position signal from the load control unit, the difference between the load control position signal and the actual valve position signal from a linear variable differential transformer (LVDT) produces an error signal The percentage of error is converted into a current signal which moves the valve to the desired position

Standby Control

Some steam turbine systems have a standby control feature that is used to generate valve position signals that are sent directly to the flow control unit, bypassing the speed and load control units The signal from the standby control unit is input directly by the Operator The purpose of the standby control unit is to allow maintenance on the speed and load control units while the turbine is in service

7 3 3 Alarm and Protection

To protect personnel and the steam turbine from abnormal operating conditions, the steam turbine is provided with several protective control schemes

Emergency Trip System

The function of the emergency trip system is to provide alarms to alert the Operator of abnormal conditions when they first develop and to trip the turbine if those conditions exceed preset parameters This system consists of a number of different devices In the event of a trip, these devices provide signals to trip the main steam valves closed The following parameters are monitored and can trip the turbine

- Overspeed
- Thrust bearing wear
- Low bearing oil pressure (also equipped with mechanical backup trip device)
- Low condenser vacuum (also equipped with mechanical backup trip device)
- Low EHC hydraulic fluid pressure (also equipped with mechanical backup trip device)

Mechanical Overspeed Trip

The mechanical overspeed trip provides a trip signal to close the main steam valves in the event of a turbine overspeed incident The mechanical overspeed trip, consists of a bolt which slides into a hole in the turbine rotor that is perpendicular to the axis of the turbine rotor (or secondary shaft for the secondary emergency overspeed governor) During normal operation, the center of gravity of the bolt is displaced from the center of rotation of the shaft so that when the shaft is spinning, centrifugal force on the bolt tends to force it out of the hole in the shaft The bolt is prevented from flying out of the hole during normal operation by a spring that is strong enough to overcome the centrifugal force at speeds below the trip speed

Normally, tripping the overspeed trip would result in tripping of the turbine The emergency trip system is equipped with a test valve in the overspeed trip relay to make this test possible on-line without tripping the turbine

Electrical Overspeed Trip

The electrical overspeed trip is provided as a backup to the mechanical overspeed trip It senses turbine speed electronically using a toothed wheel and magnetic probes It cannot be tested by operators It can be effectively disabled for actual testing of the mechanical overspeed trip This is done by temporarily setting the electrical overspeed trip setpoint far above its normal setpoint (to 115% of rated speed) for the mechanical overspeed trip test

Overspeed Protection Controller

The overspeed protection controller (OPC) is not part of the emergency trip system The function of the OPC is to trip the controlling valves closed in the event of an overspeed event The design of the OPC is such that it closes these valves before the speed of the turbine actually reaches the mechanical overspeed or electrical overspeed trip setpoints The OPC reduces the peak overspeed of the turbine to prevent the turbine from reaching these trip setpoints

Condenser Low Vacuum Trip

The function of the condenser low vacuum trip is to protect the turbine from operation under low vacuum conditions that would damage the turbine blades, particularly in the L P turbine It consists of two pressure switches that monitor condenser pressure There are normally-closed solenoid-operated test valves in the sensing lines to each pressure switch that port the pressure switches to atmosphere when energized to open Opening a test valve causes the pressure switch to trip without affecting the condenser vacuum because of the orifice

Low Bearing Oil Pressure Trip

The function of the low bearing oil pressure trip is to protect the turbine from operation with loss of lube oil It consists of two pressure switches that monitor lube oil header pressure The sensing lines from the lube oil header to the pressure switches have orifices in them There are normally-closed solenoid-operated test valves in the sensing lines to each pressure switch that port the pressure switches to drain when energized to open This causes the pressure switch to trip without affecting the lube oil header pressure because of the orifice

Low EHC Hydraulic Fluid Pressure Trip

The function of the low EHC fluid pressure trip is to protect the turbine from operation with loss of EHC hydraulic system pressure It consists of two pressure switches that monitor EHC hydraulic system high pressure header pressure The sensing lines from the EHC high pressure header to the pressure switches have orifices in them There are normally-closed solenoid-operated test valves in the sensing lines to each pressure switch that port the pressure switches to drain when energized to open Opening a test valve causes the pressure switch to trip without affecting the EHC high pressure header pressure because of the orifice

Thrust Bearing Wear Trip

The thrust bearing wear trip utilizes the TSI rotor position transducers as inputs to the two trip channels The test circuitry is arranged so that when the rotor position for one channel is being tested, that channel is disabled If rotor position changes excessively during the test the turbine is tripped

Remote Trip

The turbine can be tripped remotely by a signal from the turbine trip pushbutton and from signals from outside of the turbine such as cross trips from lockout relays for either the HRSG or the main generator breaker

7 4 Generator Controls

7 4 1 Electrical Generator Control System

The basic components of a generator control system rely on the principles of electromagnetism and induction to produce electricity A basic principle of electromagnetism is that current passing through a conductor produces an associated magnetic field around the conductor In the generator, a magnetic field is created around the rotor coils by DC flowing through the rotor coils

Another basic principle of electromagnetic induction states that when a conductor (wire) moves through a magnetic field (or when a magnetic field moves across a conductor) a voltage is induced in the conductor In the generator, the stator has a large number of windings and as the rotor turns and the magnetic field rotates, a voltage is induced in the stator windings

The strength of the magnetic field surrounding the rotor depends on the amount of current flowing through the coils and the number of coil turns The amount of electricity produced in the generator is directly related to the magnetic field produced by the rotor and the rotational speed of the rotor The generator terminal voltage is controlled and matched to the grid voltage by varying the strength of the rotor's magnetic field This is performed by regulating the exciter's DC current supplied to the generator rotor The generator is controlled automatically by the Automatic Voltage Regulator and requires minimal Operator attention under normal operating conditions

Since the frequency of the electric grid must be held constant at 60 Hz, the speed of the generator must be maintained constant as the generator load varies The speed of the generator is held constant by controlling the speed of the turbine using a governor

Control of the KW and KVARs being produced by a generator is only possible when the generator is synchronized to the grid The amount of KW produced is regulated by injecting a biasing signal to the governor The amount of KVARs produced is regulated by a bias signal to the voltage regulator

Generator Voltage Control

Generator voltage is measured using a potential transformer and compared to the set point signal inside the voltage regulator The voltage regulator then changes the current to the exciter to correct any error in the generator's output voltage Generator voltage control is only possible when operating the generator isolated from the grid

732

Lagging Power Factor

When an inductive load (lagging power factor) is applied to a generator, the flux generated by the armature directly opposes the flux of the main field This tends to reduce the saturation of the iron and reduce the generator's output voltage The exciter compensates for this by increasing the current supplied to the field poles on the rotor

Leading Power Factor

When a capacitive load (leading power factor) is applied to a generator, the flux generated by the armature reacts positively with the flux of the main field This tends to increase the generator's output voltage The exciter compensates for this by decreasing the current supplied to the field poles on the rotor

Generator Frequency Control

Generator frequency is measured using a potential instrument transformer and converted to a voltage that is compared to the set point signal inside the governor The governor then changes the position of the fuel/steam control valve allowing more or less fuel/or steam to the turbine This changes the speed of the turbine and corrects the frequency of the generator Generator frequency control is only possible when operating the generator isolated from an infinite grid

Generator KVAR/MVAR Control

The generator's voltage regulator can not, by itself, change the voltage on an infinite grid, but the output function of the voltage regulator still remains to control the current in the exciter field and thus the relationship of the main magnetic field with the armature's magnetic field To pick-up or produce VARs (lagging pf), it is necessary to over-excite the main field This is because lagging VARs tend to desaturate the field To absorb VARs (leading pf), it is necessary to under-excite the main field This is because leading VARs tend to over-saturate the field

The generator KVAR/MVAR load is measured using potential and current transformers This value is compared to the set point signal inside the KVAR/MVAR controller The KVAR/MVAR controller sends a biasing signal to the voltage regulator The voltage regulator then changes the current to the exciter to correct any error in the generator's KVAR/MVAR load

Generator KW/MW Control

Load Angle

Load angle is the angle between the centerline of the pole axis of the generator with respect to the pole axis of the system/grid From an electrical point of view, load angle can be defined as the angle by which the voltage wave of a generator leads the voltage wave of the system Increasing the load angle causes more KW/MW load to be picked up by the generator

The currents flowing in the three stator windings produce a magnetic field which rotates at synchronous speed The rotor is bonded to this magnetic field because of the attraction between the rotor's magnetic field and the stator's magnetic field There is an equilibrium between the torque driving the rotor ahead of the stator (supplied by the prime mover) and the torque which tends to pull the rotor back in step with the stator (supplied by the grid and mutual attraction) Increasing steam or fuel to the turbine upsets this equilibrium As the rotor advances slightly with respect to the stator, a new equilibrium position is established The increase in the load current will increase the strength of the stator's magnetic field causing a stronger attraction between the stator and rotor magnetic fields The maximum power occurs when the load angle is 90° If the turbine supplies enough torque that the bond between to two magnetic fields is broken, the generator becomes unstable and will lose synchronism

There is a theoretical point in the opposite direction where the stator's magnetic field is stronger than the rotor's magnetic field This occurs when the rotor field is reduced because of a leading power factor, as discussed in the previous section, causing loss of synchronism The loss of synchronism is usually not considered a problem since excessive heating of different generator parts will occur first

-734

Generator power (KW/MW) is measured using potential and current transformers The power signal is converted to a voltage that is compared to the set point signal inside the KW/MW controller The KW/MW controller sends a biasing signal to the governor The governor then changes the position of the fuel/steam control valve allowing more or less fuel to the turbine This changes the torque of the turbine and corrects the load angle of the generator

Generator Synchronizing

The generator frequency is monitored using a potential transformer The frequency signal is compared to the set point signal (Grid Frequency) inside the autosynchronizer The autosynchronizer sends a biasing signal to the governor The governor then changes the position of the fuel/steam control valve allowing more or less fuel/steam to the turbine This changes the speed of the turbine and corrects the frequency of the generator before it is paralleled to the grid

Governor Control

The governor controls the speed or torque being applied by the turbine to the generator Ideally, it is expected that when the load changes, the governor will respond by increasing or decreasing fuel/steam to maintain frequency at a specific set point (Load Reference Set point) A governor characteristic called "droop" means that when load exceeds supply, governor control results in a frequency decrease, and when supply exceeds demand, governor control results in a frequency increase

Figure 7-7 shows a typical governor characteristic curves for two generators Since the characteristic curves for each governor is different, each governor will response to load changes differently Governor control limits frequency deviations, but the governor control range is limited, and so is the governors ability to return the unit to the set point

135

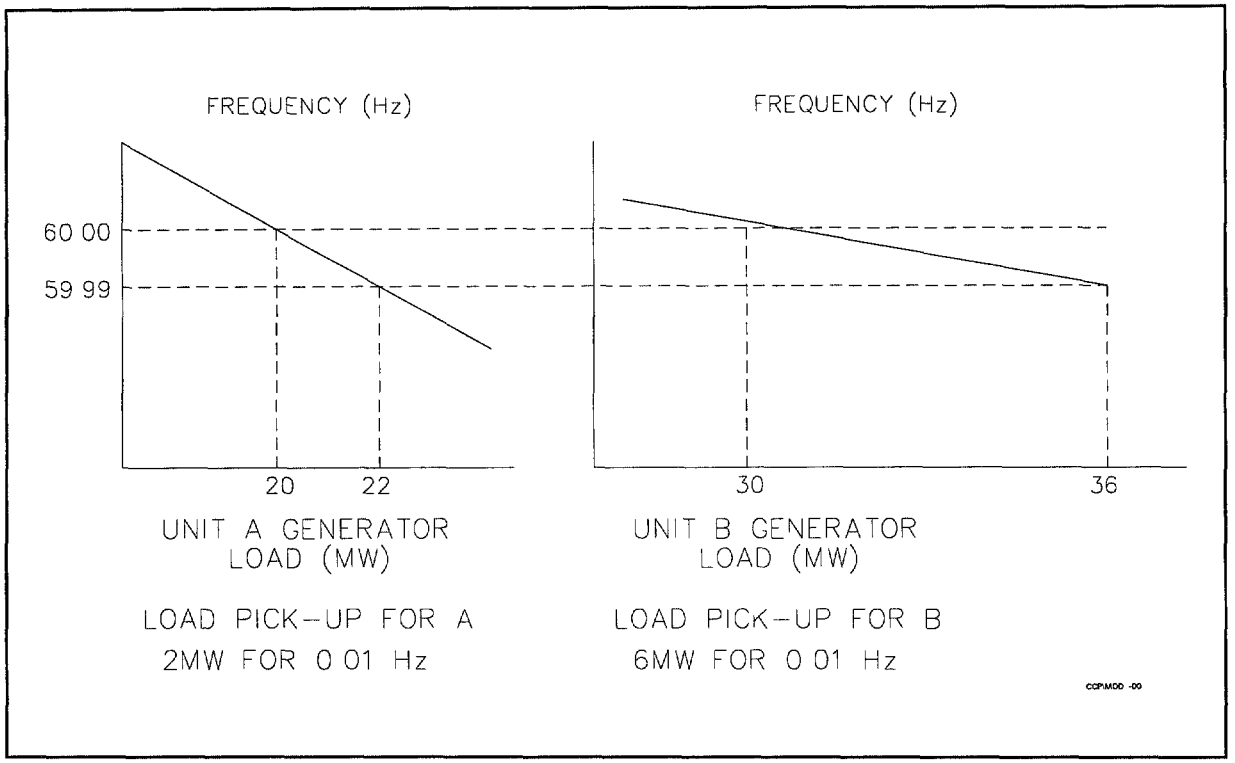

Figure 7-7 Governor Characteristic Curves

Synchronizing

During start-up, as the generator speed increases, the generator terminal voltage is established by first closing the field breaker and then increasing the field current The generator terminal voltage is gradually increased until the generator's output voltage matches grid voltage Once the voltages are matched, the Automatic Voltage Regulator is placed in service

The generator must be in synchronization with the grid before the circuit breaker between the generator and the grid can be closed There are three requirements for proper synchronization of the generator to the grid

- Generator frequency matches grid frequency
- Generator voltage matches grid voltage
- The generator voltage peaks at the same time as the grid voltage (phase angle is close to zero)

736

Generator voltage is increased to match grid voltage using the Automatic Voltage Regulator Likewise, generator speed is increased until the generator frequency matches the grid frequency Nominal frequency is 60 Hertz, which corresponds to a generator speed of 3600 RPM for a 2 pole field Normally, generator frequency should be slightly higher than the grid frequency prior to synchronization This ensures that the generator assumes KW loading when the circuit breaker is closed, instead of becoming a load to the system

If generator frequency is lower than grid frequency at synchronization, current will flow into the generator from the grid Under these conditions, the generator will act as a synchronous motor, this phenomenon is called motoring Motoring of a generator can cause overheating and damage If the generator frequency is higher than grid frequency, the synchroscope needle will rotate in the clockwise direction The slower the rotation, the more closely generator frequency matches grid frequency

By observing the synchroscope, the Operator can determine when the phase angle between the generator and the grid approaches zero As the synchroscope needle approaches the 12 o'clock (up, vertical) position, the phase angle approaches zero and the circuit breaker can be closed The generator manufacturer generally places a limit of $\pm$ 10° on the phase angle for synchronization Most plants, however, have protective relaying which prevents the main generator breaker from closing unless the system and generator are within about 5°

Generator Temperature Monitoring

Temperature is perhaps the most critical parameter of generator operation Nearly all of the operational limitations and recommendations discussed thus far are designed to ensure that generator temperatures are kept within acceptable limits One problem with monitoring generator temperatures is that it is only practical to measure temperatures in some areas of the generator One major area which is not monitored directly is the generator rotor surface

137

Another consideration in monitoring generator temperatures is that it is generally not sufficient to monitor temperatures to ensure that they do not exceed or fall below fixed limits In many instances, such as stator bar RTDs, it is necessary to monitor differentials and, in some instances, deviation from averages For these reasons, generators seldom have high temperature trips In general, the attention of a knowledgeable operator is necessary to determine when a problem exists and the proper course of action to follow Microprocessors are being used on some newer units to aid the Operator in temperature monitoring by performing calculations continuously to average temperatures and calculate differentials

Core Monitor

If a generator overheats or develops hot spots, the insulating material will begin to thermally decompose and release small particles into the hydrogen The core monitor is used to constantly monitor the gas for insulation particles suspended in the gas Most core monitors are very similar to household ionization smoke detectors During normal operation there should be no particles in the gas

Since hydrogen is monitored, the monitor has to be purged with CO_2 in the same manner as the generator The monitoring system has its own gas control system (similar to the generator) to facilitate removal, maintenance, or draining of the drip legs

The monitor has a test system that simulates generator overheating This is accomplished with two specially coated filaments When the filaments are energized, they overheat and the coating thermally decomposes, emitting particles and enabling a real test of the monitor

Monitor output is directly proportional to gas flow A constant gas flow and pressure results in a constant current signal An increase in gas flow causes an increase in the current output signal and vice versa When particulates pass through the ion chamber, they produce the same affect as reducing the gas flow, resulting in a lower current signal The current signal is proportional to the number of particulates in the gas flow and the percentage of overheat If the current signal drops low enough, an alarm will sound in the control room and at the remote monitor panel

738

The reduction of generator speed causes a drop in the generator fan differential pressure, resulting in a lower gas flow to the monitor, giving a false alarm indication

Most monitoring systems are equipped with a gas filter and a two-way solenoid valve to bypass the filter Normally the filter is bypassed To place the filter in service, press the filter pushbutton to energize the solenoid valve and direct the gas flow through the filter When the filter is in service, it removes all particulates from the gas and the monitor meter reading should reflect that If the meter does not indicate a good reading, the monitor is malfunctioning

7 4 2 Generator Operational Limitations

The generator nameplate commonly provides the essential design parameters for the generator There are three areas in which there are operational limits associated with generator operation temperature, current and voltage

Prestartup Temperature Limitations

The only limitation before startup is that the generator temperature is at least 20°C (68°F) before exceeding 3000 RPM This is required to ensure that the generator rotor is above its transition temperature prior to imposing the stress of full speed operation Normally, keeping the stator winding liquid cooling system in service during shutdown will provide adequate heating because the liquid will be warmed by pump friction If the temperature is not high enough before the unit is "rolled", speed must be held at 3000 RPM until the temperature increases to an acceptable value

Voltage and Current Limitations

The manufacturer imposes limitations on the amount of field and armature voltage and current which are acceptable for operation These limitations are described in several different ways The generator armature is usually designed to operate continuously at voltages of plus or minus 5% of rated voltage when the unit is synchronized and at 3600 RPM During startup, before the main generator breaker is closed, the armature voltage may vary by plus or minus 7 5% according to most manufacturers In the event that the unit is at a speed of less than 3600 RPM, the voltage must be reduced to prevent overheating the armature

7 4 3 Generator Capability Curves

Real and reactive power are generated by a three phase, AC generator Both types of power cause current to flow in the generator armature windings, and so it is necessary to monitor both The generator's manufacturer provides a capability curve to give limits on how much of each type of power may be generated

The capability curve is just as the name implies It is a plot of the loading limits, at different power factors and hydrogen pressures, that the generator is capable of operating at without overheating **Figure 7-8** shows a typical capability curve The capability curve is actually three curves in one The individual curves depict

1 Field winding heating limit (segment AB in **Figure 7-8**)
2 Stator (armature) winding heating limit (segment BC in **Figure 7-8**)
3 Stator (armature) core end iron heating limit (segment CD in Figure **7-8**)

To use the capability curve, plot the load in watts on the horizontal axis and then extend a vertical arrow up (or down) by the length shown on the vertical axis for the amount of VARs being generated or used If the point of the KVAR/MVAR arrow is inside the curve, then all is well as the generator is being operated within its capability If the arrow is outside the curve, the watts and/or VARs must be reduced immediately because the generator is being operated outside of its capability and serious damage may result It is important to note that the generator's capability can be exceeded even if the megawatts are less than the turbine rating, by excessive reactive power

The generator produces two types of electrical power commonly referred to as reactive power (vars or volt-amps-reactive) and true power (watts) Reactive power is supplied in the generator because the load current and voltage are not in phase This is due to the fact that in any AC electrical circuit, some loads are inductive and others are capacitive in nature Inductive loads cause the current to lag behind the voltage Capacitive loads cause the current to lead the voltage When the generator load has a greater induction load, the inductive load will generate vars and have a lagging power factor When the generator has a greater capacitive load, the capacitive load absorbs vars from the grid and will have a leading power factor

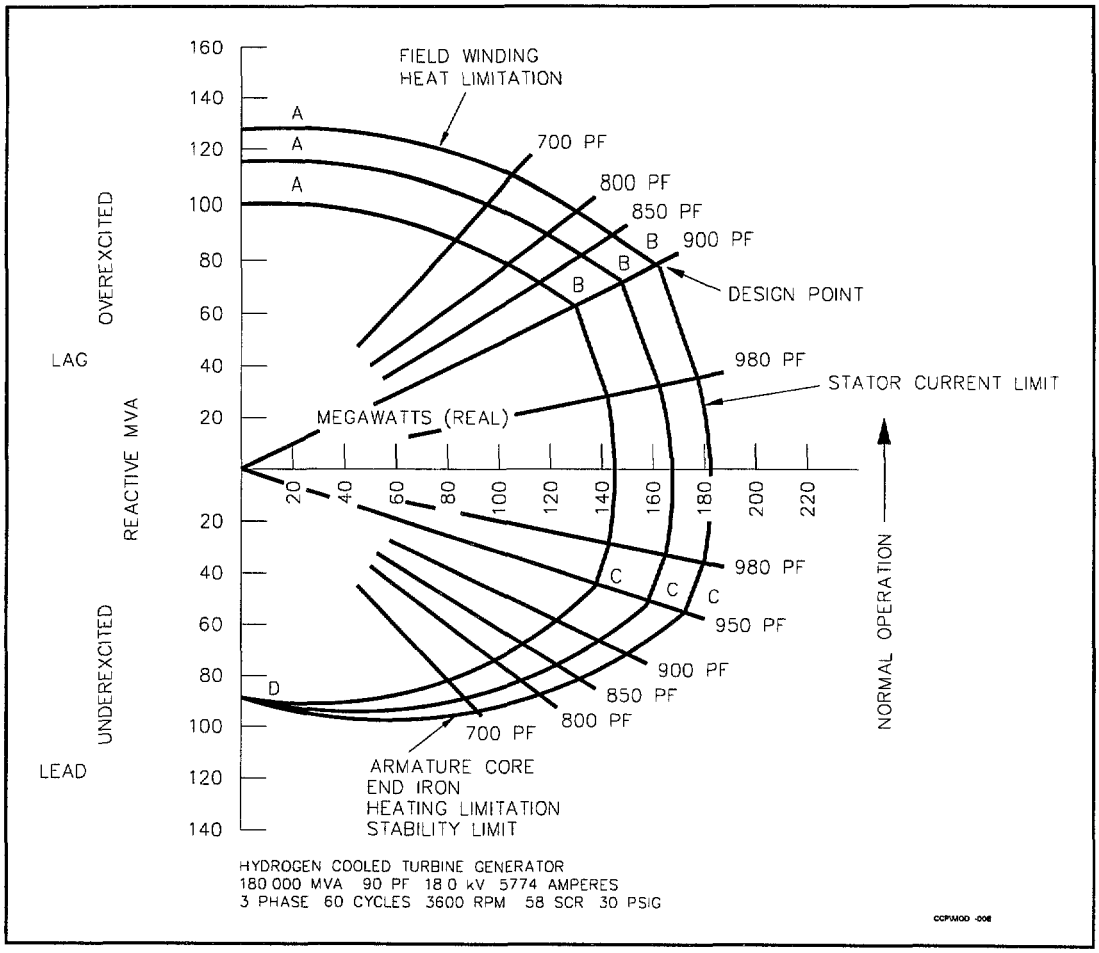

Figure 7-8 Typical Capability Curve

The total power produced by the generator is the vector sum of reactive power and true power and is referred to as apparent power (volt-amps) The power factor is the ratio of true power to apparent power If the voltage and current are exactly in phase, the power factor will equal 1 0 If they are not in phase, the power factor will vary between 0 0 and 1 0 If the generator has a nominal power factor of 0 85 lagging, this indicates that by design, 85 percent of the total power produced by the generator is Watts and 15 percent is VARS

741

Kilowatts (true power) are shown on the horizontal axis while kilovars (reactive power) are shown on the vertical axis The overall capability curve is composed of three separate curves because different parts of the generator limit overall operation The limiting factor depends on the loading condition During high lagging reactive load conditions, the field winding overheats first During high leading reactive load conditions, the core end iron and instability are the limiting factors During high KW load conditions, the stator is the limiting factor

Generator Vee Curve

A "Vee" curve shows the effect of excitation current on the VAR generation or absorption (**Figure 7-9**) At low excitation (field) currents, the generator is absorbing VARs This is a leading power factor condition As excitation is increased, the armature current decreases until a point is reached at which the generator is neither generating or absorbing VARs This point is when the power factor is 1 0 As the excitation is further increased, the generator supplies VARs to the grid This is a lagging power factor condition

Saturation Curve

The Saturation curve (**Figure 7-10**) is composed of two curves, the No Load Saturation and Synchronous Impedance curves There are two points (AFNL and AFSI) identified on the curves AFNL indicates a condition where the Amps Field is at No Load AFSI indicates a condition where the Amps Field is at Synchronous Impedance A no load condition is a thevenin circuit A condition, in this case, where the generator requires a field current of 1120 amps to obtain the rated voltage of 22,000 volts The synchronous impedance condition is a short circuit condition In this case, a field current of 1850 amps is required to obtain a rated output of 10,234 amps If these two field current conditions are added you obtain the maximum field value of 2970 amps

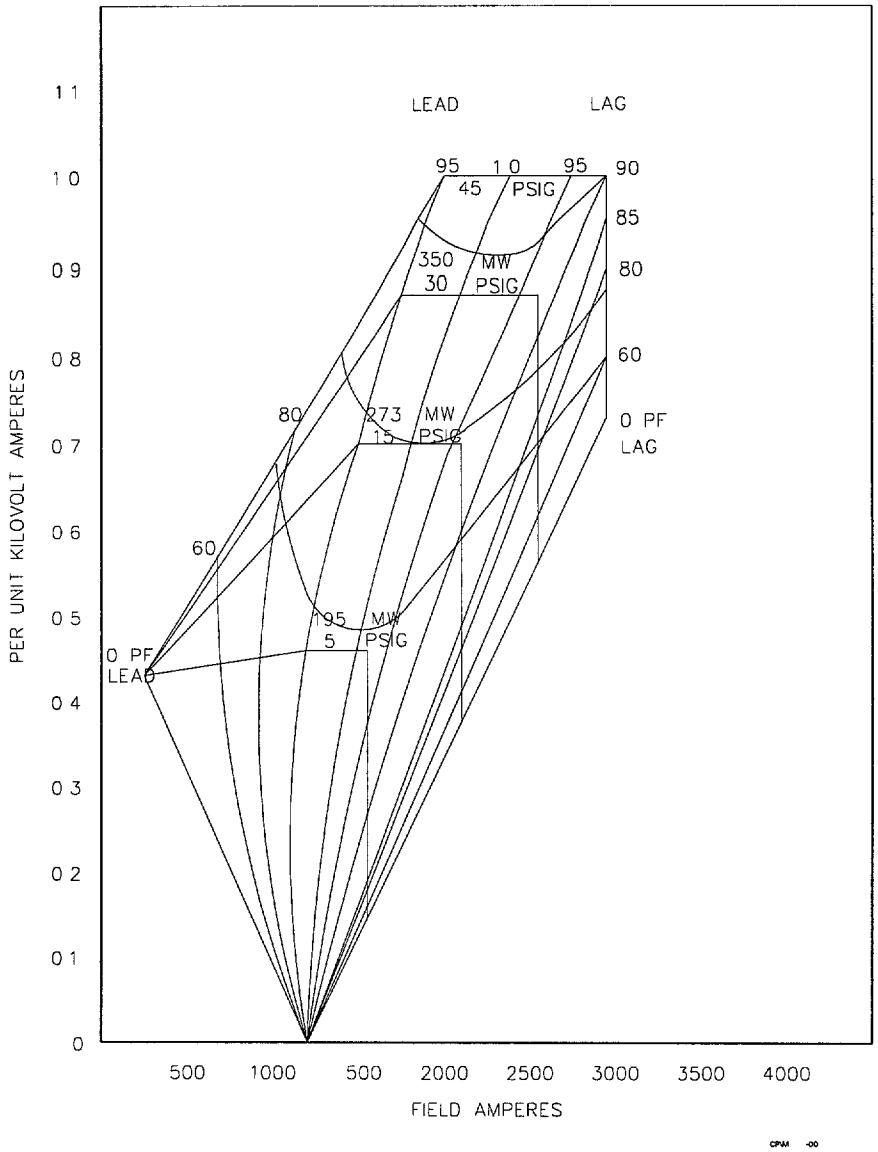

Figure 7-9 Vee Curve

743

Negative Phase Sequence Curve

Figure 7-11 shows a negative phase sequence curve When the loads on a three phase generator are not balanced, negative phase sequence currents are produced These currents cause circulating currents on the surface of the rotor These circulating currents generate heat that damages and degrades the field Another less important result of this unbalanced condition is the production a shaft torque pulsating at twice the line frequency The pulsating torque also appears on the stator core If the core is rigidly mounted to the frame as it is on 1800 rpm generators, the pulsating torque is transmitted through the frame to the foundation

The negative phase sequence curve is simply a graphical representation of the relationship between the negative phase sequence component and the phase currents The negative phase sequence curve applies only when there are no zero phase sequence currents A helpful rule when negative phase sequence currents are less than 5%, is that the positive phase sequence component is approximately equal to the average of the three phase currents, and the negative phase sequence component is approximately equal to the maximum deviation of any of the phase currents from the average

7 4 4 Generator Protection

Volts/Hertz

Operation at lower frequencies without reduction in generator voltage is made possible by design to allow the unit to withstand fault conditions The quantity "volts-per-hertz" is used to define the limitations imposed for such operation Volts-per-hertz is simply the voltage of the armature, expressed as a percentage of rated voltage, divided by the actual speed expressed as a percentage of rated speed

This may also be expressed as shown below

$$\text{Volts/Hertz} = \frac{\text{Actual Voltage/Rated Voltage}}{\text{Actual Speed/Rated Speed}} \times 100\ \%$$

744

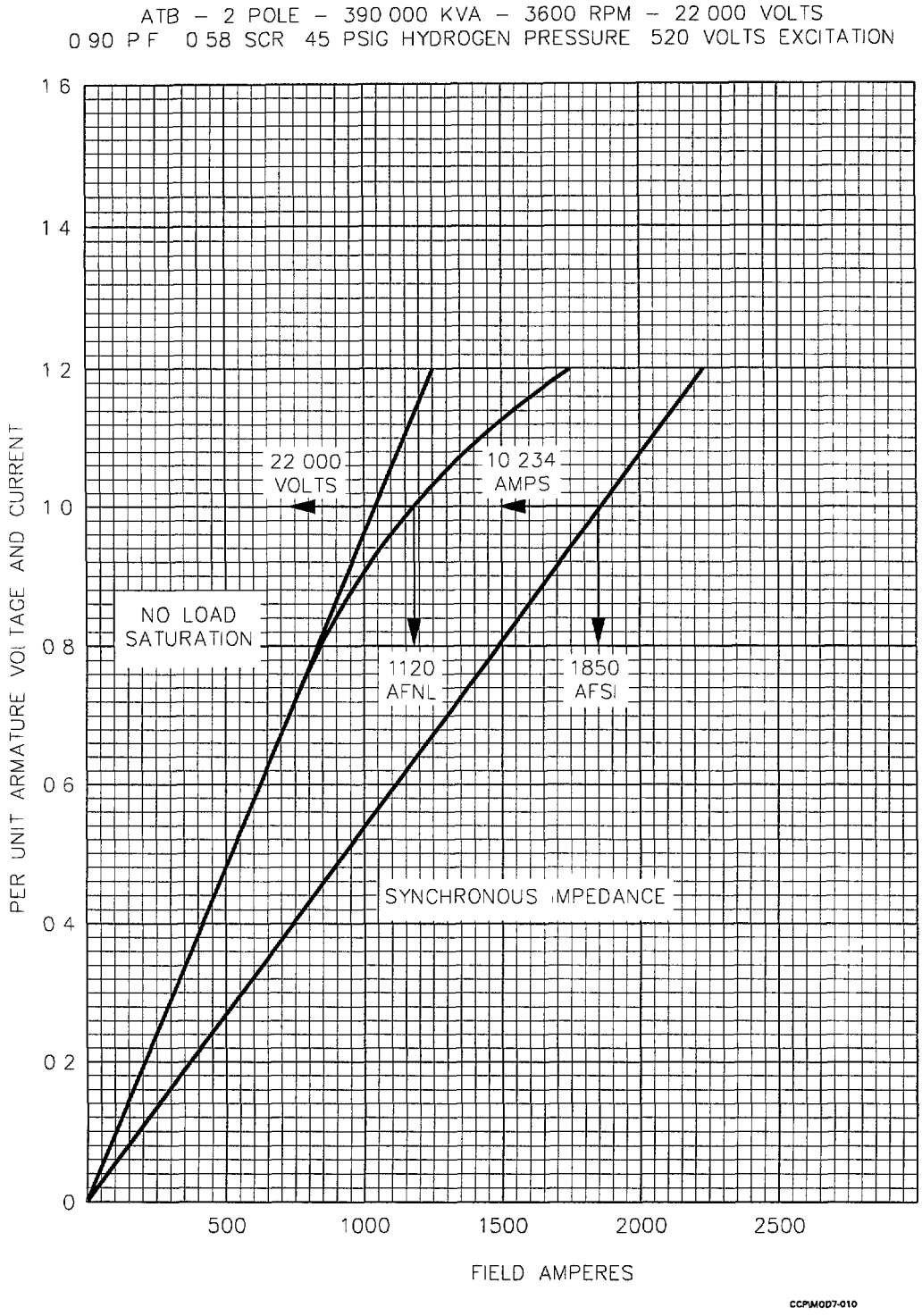

Figure 7-10 Saturation Curve

745

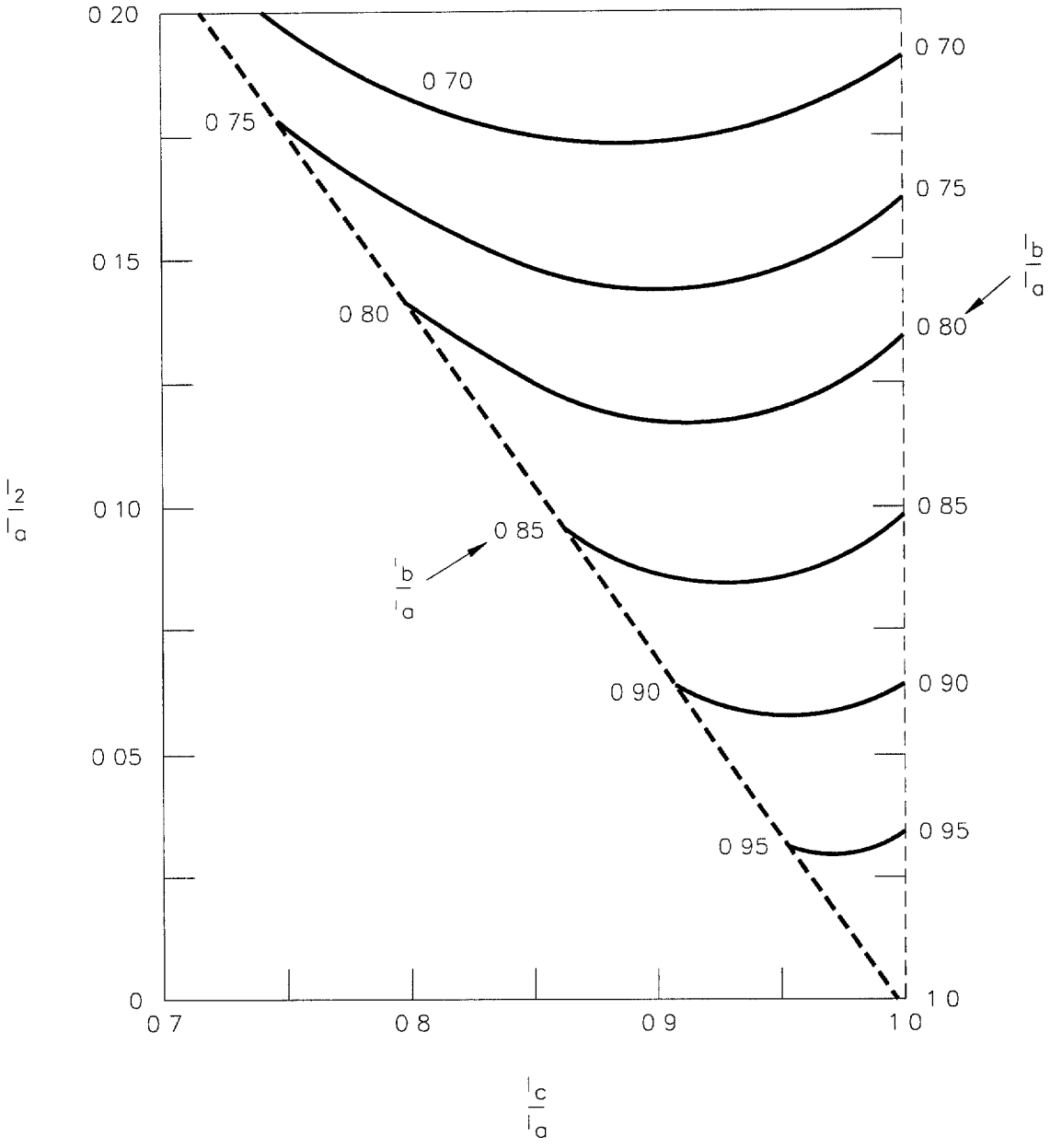

I_2 = NEGATIVE PHASE SEQUENCE CURRENT
I_a = LARGEST OF THREE PHASE CURRENTS
I_b = SMALLEST OF THREE PHASE CURRENTS
I_c = INTERMEDIATE PHASE CURRENT

CCP\MOD7-011

Figure 7-11 Typical Negative Phase Sequence Current Nomograph

74

The maximum volts-per-hertz allowable is usually about 120% for a maximum duration of two seconds Automatic volts-per-hertz relaying is often provided to trip the generator if these limits are exceeded

When generators are operated at less than normal speed or frequency, the resistance to AC current (impedance) is reduced The resistance to AC current reduces because impedance rises with increased speed and falls with decreased speed If the frequency goes down and the armature voltage remains the same, the armature current increases Because of this phenomenon, generator manufacturers recommend that the KVA of the generator be reduced as the frequency decreases

Volts-per-hertz regulation is a process where the voltage regulator reduces the field current and thus the output voltage when the frequency drops If a large load is applied to an isolated generator, the following sequence occurs

- Additional load increases current in the stator/armature
- An increase of stator current, increases the magnetic pull between the rotor and stator fields reducing the speed of the prime mover
- Reduced speed causes fewer magnetic lines to be cut resulting in a lower voltage output and less efficient cooling of the prime mover
- Voltage regulator increases current to the field to compensate causing more drag on the prime mover

Loss of Field

Loss of field is a term used to describe operation of the generator with the main generator breaker closed and no excitation Loss of field usually occurs because the field breaker opens When this situation occurs, currents are induced on the surface of the rotor Currents are induced because without excitation to keep the unit synchronized, the rotor does not turn at the same speed as the rotating magnetic field in the stator Since the rotor "sees" a changing magnetic flux, a voltage is induced and currents flow on the surface of the rotor These currents cause heating of the rotor surface

Usually, generators are provided with loss of excitation relays These relays trip the main breaker and field breaker when the generator loses excitation Operating the generator with the main generator breaker closed, but without excitation, causes overheating of the generator field It takes only a few seconds for the overheating to cause damage

Operating with loss of field should not be confused with "motoring" When a generator is motored, both the field breaker and main breaker remain closed, but instead of generating power, the generator uses power from the system and acts as a synchronous motor There is not a loss of field with motoring Motoring is not harmful to the generator provided that normal limitations on voltage, current and temperature are observed Motoring can, however, be harmful to the prime mover

Operation With Unbalanced Phase Currents

During normal operation, the currents in each phase of the generator are about the same and are said to be balanced When the phase currents are balanced, a symmetric, rotating magnetic field is created in the stator which rotates at the same speed as the generator rotor

If an imbalance of phase currents in the stator occurs, the stator's rotating magnetic field becomes distorted and asymmetric As the generator rotor spins, the rotor "sees" a change of magnetic flux once each revolution Any time a conductor experiences a change in magnetic flux, a voltage is induced and, if there is a complete circuit, currents will flow That is exactly what happens to the generator rotor The asymmetric magnetic field from the stator induces a voltage and causes currents to circulate on the surface of the rotor If the there is enough current, there will be heating of the rotor surface

Generators are designed to withstand operation with some unbalanced current, since in actuality, the three phase currents will never be exactly balanced Manufacturers guarantee that their equipment can operate continuously with from 5% to 10% negative phase sequence current The negative phase sequence current is usually expressed as a percentage of rated armature current

If the negative phase current exceeds the maximum allowed, manufacturers commonly recommend the following actions be taken

1 Reduce the generator load
2 Reduce the voltage without exceeding the underexcited reactive calculation
3 Take the generator off line

Vibration Limits

Generally, the limits on vibration of the generator closely parallel those of the turbine Maximum vibration levels for continuous operation are generally around 4 mils for the shaft, 6 mils for the couplings, and 5 mils for the collector rings

7 5 Plant Digital Control System

The Digital Control System (DCS) is responsible for the automatic control and monitoring of most of the plant systems, which are operated in unison to provide efficient, reliable operation The DCS may be considered to be an integrated control system, that is all plant controls are integrated into a common system

7 5 1 Control System Overview

Many computer control systems in power plants used a single central computer for all functions One of a class of systems is called the distributed digital control system In such a system, there are many digital computers that are linked together so that they can communicate The means by which communications take place is referred to as the "data highway" in nomenclature

The data highway provides the different digital computers with a means for exchanging data The data highway consist of either coaxial cable or fiber-optic cable which is routed throughout the plant over which data is continuously broadcast and received from the "drops" on the highway One of the key "drops" on the highway is the Distributed Processing Unit (DPU) The DPU's receive process inputs (i e , temperatures, flows, pressures, and levels), and transmits them as data onto the highway for other users The DPU's also provide an output to a control device (i e , valve actuator, damper, electrical relay) to operate (start/stop) equipment or

implement a control function (maintain a process variable setpoint) Numerous DPU's are installed on the data highway, each with specific responsibilities for process control and data acquisition The design of the data highway allows every drop to simultaneously "listen" to the broadcast of all process point values A backup DPU is provided for each DPU The backup DPU automatically takes over operation in the event of a failure of the operating DPU

As each drop "hears" the process points, the drop acquires information required to perform its function For example, a controller may increase a temperature on the process or alarm an "off normal" condition to the Operator Information broadcasted on the highway is simultaneously available to every drop on the highway Since the process point is available, the highway provides a global data base that is always available and current to any user on the highway

A very important aspect of any computer system is the user interface, generally referred to as the man-machine interface (MMI) The MMI is, from the perspective of the user, the end of the system The MMI for the DCS system utilizes multiple computer terminals that have three elements, a "touch screen" CRT (Cathode Ray Tube), a membrane type key board, and printers These elements are all provided in a central control room

As discussed, the central control system is tasked with monitoring and operating the entire plant, its systems, subsystems, and individual components However, there are certain plant systems and equipment that the DCS only monitors and has limited or no control functions To eliminate any confusion, the DCS shall be considered the primary source of control and information While the control systems architecture at each plant and unit vary, typically the DCS does not have direct control over

- Gas Turbine and Generator
- Steam Turbine and Generator
- Auxiliary Boiler
- Demineralized Water System
- Zero Discharge Water Collection and Treatment
- Gas Compressors
- Continuous Emissions Monitoring System

750

For the purposes of this module, only an overview of the controls for the power components (gas turbine, steam turbine, HRSG, and electrical generator) are discussed Specific control of various plant components are covered within their respective system This module discusses the function and application of the DCS as it applies to a combined cycle power plant

7 5 2 Basic System Function and Principles

The DCS has many functions A summary of the high level functions is as follows

- Collect and store data from three types of sources

  - **Analog** - An analog source is typically a transducer that converts the value of a parameter like generator load to a digital quantity The nature of the parameter is that it varies continuously over a range of values rather than having only two discrete values

  - **Digital**- A digital source is a device like a limit switch that has only two values such as open or closed, running or stopped, on or off

  - **Calculated**- A calculated value is one that is determined by calculation in an algorithm (an algorithm is simply a mathematical formula or series of formulae that are used to determine a value) In some cases the calculated value may be as simple as an average of several instruments that measure the same parameter and in other cases the calculated value may be more complex, such as determining plant heat rate

- Make data available to the users - The DCS system makes data available in several different ways The principal means is through the CRT, however the printers are also an important element in display It is also possible to access data and manipulate it using other computers

751

- Provide the Operator with alarm information - One specific and important area that comes under the broad category of making information available to the user that deserves special attention is the display of alarms In conventional power plant control rooms, alarms are annunciated by alarm panels that light up and provide audible alarm in the event that an alarm condition exists (such as high HRSG drum level) The DCS alarms are annunciated through the CRT and printers

- Provide the Operator with the means to control the various systems and components in the plant Those controls may be automatic or manual and the capability to adjust automatic control setpoints and change the mode of operation from automatic to manual are also provided

- Makes stored data available for historical analysis Typically, the DCS is equipped with a Historical Data Recorder or Historian which consists mainly of a dedicated computer hard disk with an enormous amount of storage capability Equipment STARTS and STOPS as well as alarm conditions are stored by the Historian for future reference and analysis by the plant staff

- Provides for maintenance and modification to the system at engineer work stations

To achieve the above functions, the DCS use the same principals which are seen in any digital computer system, for example the SPEEDTRONIC or DEH All information is represented in binary form (ones and zeros, for instance) While the computer and processors need this binary information, the representation which the user sees "insulates" the details and provides a user interface that displays information and allows the user to enter commands easily and without knowing (or needing to know) about the underlying principles of computer science

An understanding of the "low level" aspects of computer hardware and software is not necessary to use the DCS effectively As with other components in the plant, however, a good understanding of the system, the principles, and components of the system is necessary for the Operator to use the system effectively and solve system problems

The heart of the system is the data highway Typically, there are two redundant data highways, one of which is a "hot backup " Hot backup means that both data highways are in operation all of the time, but one is not being used In the event that the primary data highway fails, the backup automatically takes over

The reason for the data highway is to make it possible for digital computers and other devices to communicate by sending data to and from one another Each device on the data highway is assigned a unique address so that messages reach their intended destination There are many digital computers in the system distributed in such a way as to dedicate a single computer to a particular function or area This approach is different from more traditional computer systems in which there is a central computer where all calculations and control functions are preformed

DPU's generally perform control functions as well as providing for Input/Output (I/O) Several control aspects to consider include, performing calculations associated with control loops or acting through devices such as MCC contactors to start and stop a pump motor

The Operator does not see any of these details when using the DCS The screen is displayed on the operator control console (OCC) associated with the area that requires attention In doing this, the OCC communicates with the DPU associated with that area and displays a screen which is usually graphic That is, the component or system is represented as a simplified schematic If the screen is associated with control (rather than display of data only), the Operator can issue commands to the system through the CRT by touching the screen which has pictures indicating what areas must be touched to perform certain control operations such as opening a valve The message is then sent from the OCC over the data highway to the appropriate DPU which then executes the control action by generating a signal that is sent through the I/O circuitry to the appropriate device

7 5 3 Operator Interface and Functions

In any computer system, there is hardware and software Software components are not often thought of in the same context as hardware because in general a software component is designed to provide a certain function Accordingly this section addresses hardware components Software components are described in terms of their function in section 7 5 4

Operator Control Consoles and Printers

As described earlier, the MMI consists of CRT's, with keyboards and printers A CRT together with its keyboard is referred to as a Operator Control Console (OCC) Typically, CRT's have 19 inch, color, high resolution screens with touch screen features The consoles are integrated in a central control room A touch screen is one that allows the Operator to issue commands (operate equipment) by actually touching an area of the screen with his finger Graphic screens are displayed on the CRT so that the Operator can see what area of the screen to touch to enter a command For instance, a graphic screen for control of a temperature control valve might have a picture of a controller with Δ (increase) and ∇ (decrease) "push buttons" displayed on the screen The Operator would touch the Δ (increase) on the screen to increase the temperature setpoint

The OCC's are the main point of interface with the DCS From the OCC, the Operator can

- Tune modules
- Transfer mode of operation (from AUTO to MANUAL for instance)
- Adjust setpoints in control loops
- Monitor all I/O and alarm points
- Observe trend data
- View interactive displays

754

The OCC's are located in the control room Additionally, there are personal computers that are capable of controlling specific plant equipment, either combustion turbines or the HRSG The PC's are not equipped with the same touch screens and membrane keyboards as the OCC's in the main control room

Engineering Work Station and Printer

Any large computer system like the DCS requires maintenance Some of this maintenance is related to the software as opposed to the hardware A typical maintenance function might be the change of mathematical coefficients used in calculation or control of a device Other types of maintenance might include the development or modification of graphic screens for operator display and addition of new functions The Engineering Work Station (EWS) is provided for that type of maintenance It also provides for the capability of analysis of data The EWS has all the functions of the OCC as well as the added capabilities of system configuration development and implementation The EWS is equipped with a color printer and a mouse

Clock Interface Unit

The clock interface is used to synchronize system time throughout the subsystems This function is automatic and requires little or no attention

Redundant Data Highway Communications Link

The data highway is a computer network that utilizes a hybrid of both fiber-optic cable and conventional coaxial cable The data highway provides for communication between all of the various elements of the DCS

The data highway is common to every other element of the DCS If the data highway were to fail, the entire system would cease to function The immediate effect of this to an Operator in the control room would be loss of his indications of the status of the plant and his ability to control the plant

755

In view of the importance of the data highway, a "hot backup" is provided Hot backup means that the backup data highway is always in service but not processing data The "hot backup" is always available to assume the function of the primary data highway in the event that it were to fail

Distributed Processing Units (DPU)

Distributed Processing Units, or DPU's are digital computers that are generally dedicated to the control of a certain system or area of the plant A typical DPU provides the following functions

- Read inputs through the I/O hardware from devices such as limit switches and thermocouples
- Accept inputs from the data highway, including commands from the operator control console
- Determine control outputs by calculation such as the proper position for temperature control valve
- Send outputs such as those required to start or stop a pump motor (digital) and those required for control loops such as a temperature control loop (analog) to the I/O hardware

The DPU's, together with the other elements of the system such as the data highway, are designed so that the failure of a DPU cannot result in the failure of the data highway or any other component Accordingly, all DPU's are dual redundant Dual redundant means that there are two DPU's, each with its own power supply, communications to the data highway, and so on In the event that the primary DPU fails in service, the backup automatically comes into service to prevent loss of control or communications The backup DPU "tracks" the in-service DPU so that in the event the backup comes into service there is "bumpless" transfer in the control loops

Termination Cabinets with Input/Output Hardware

Termination cabinets house the input/output (I/O) hardware and field wiring terminations for the devices in the plant The I/O hardware is capable of reading both digital signals such as those from limit switches and analog devices such as

256

thermocouples For analog signals, analog to digital (A/D) conversion is performed to represent the analog data digitally for processing in the DPU The I/O hardware has similar output capabilities including digital to analog (D/A) conversion Outputs include switching capabilities for both 125 VAC and 125 VDC control circuits

Uninterruptable Power Supply (UPS)

The normal source of power for the DCS is the 120 VAC power distribution system within the plant Failure of the DCS in the event of AC power failure is not acceptable The uninterruptable power supply (UPS) assures that power is available to the DCS even during a loss of AC power throughout the plant The UPS consists of an inverter that converts 125 VDC power from the station battery to 120 VAC power

Auctioneered Redundant I/O Termination Cabinet Power Supplies

Connections from equipment in the plant to the DPU's are made in termination cabinets Auctioneered, redundant I/O cabinet power supplies are located in each I/O termination cabinet The backup power supplies are operational at all times, providing a hot backup to the primary power supplies These are used to supply power to much of the control instrumentation and all of the I/O hardware These power supplies are fed from the UPS system

7 5 4 DCS Functions and Operation

The DCS is made up of both hardware and software components The previous section described the hardware components This section describes what may be thought of as software components These software components are "generic" functions that make it possible for the Operator to display data and issue control commands The same functions may be used in many different areas For instance, a bar chart type data display may be used on the C T or the HRSG graphic displays

OCC CRT Displays

The principal means of displaying data and control is through the OCC CRT's This section describes the use of the CRT's and the data that is displayed CRT displays are accessible by direct function button, by menu, by paging between "adjacent" displays, or by placing the CRT cursor on a currently displayed picture element for alarm line and pushing a "select diagram" button Paging is linked in four directions, left, right, up, and down

The system typically supports split screen displays so that plant information or alarms may be displayed continuously on the main screen while detailed information and/or operator entry fields are displayed concurrently on a subscreen of the same CRT The system will also supports a window display that may be opened on any part of the main screen The window may cover up to one fourth of the area of the main screen and may be used for details, control, or trending related to the main screen display

Changing Screens and Creating New Screens

The DCS is supplied with the EWS which has the capability to create new displays and modifying existing displays (flow diagrams, schematics, etc) Modifications of this sort requires that the user of the EWS enter a password The EWS can be used to create full graphic macrosymbols or shapes normally used in graphical depiction of power plant and process equipment Once created, the shapes are accessible by making reference to a single name

A DCS supplier will typically provide a standard set of shapes which can be modified or extended from the EWS

The Operator can make changes to the following types of parameters

- Tuning constants
- Alarm limits
- Setpoint limits
- Parameters of any loop (control algorithm, signal type, and input source)

For many parameters of the type listed above, it is necessary for a key switch at the OCC to be "turned on" to allow the Operator access to change the parameter The Operator can address parameters associated with a single loop and make adjustments provided the keylock switches are activated The Operator can also call up any analog or digital point in the system to verify its current value or logic state (the term logic state applies to a digital input and may be on or off, running or stopped, opened or closed and so on) The Operator can configure graphic displays using both standard and customized symbols This library of symbols is available on screen listings Graphic displays are interactive, allowing process changes to be made (such as changing the setpoint for a control loop)

Alarm Displays

The current alarm display consists of a header and up to 20 full-line alarm messages per page Over 2000 lines of alarm and return to normal information are available to the Operator, and they are accessible by paging backward and forward as many times as necessary to display all current alarms Alarm priority and status are differentiated by color, reverse video, and blinking as appropriate for each parameter

Each line of alarm information contains the following

- Time of the alarm (hour, minute, second)
- Process descriptive tag name (8 characters minimum)
- Process variable description (30 characters minimum)
- Code to indicate alarm limit violated
- Current value of process variable with quality
- Value of alarm setpoint for the alarm annunciated
- Engineering units of the process variable
- Time that the alarm clears

Any OCC CRT may be dedicated to alarm messages Any other OCC CRT can show any page of the alarm display upon request Alarms are sorted and displayed by system, subsystem, plant area of any other attribute desired, on a per screen basis

A priority alarm display mode is available that allows the Operator to disregard lower priority alarms by pushing a "priority alarm mode" button for each screen This mode is selectable for each screen

An alarm history display is available by single keystroke The alarm history repeats a minimum of 2000 alarm, return, status messages page by page on the CRT in chronological order It displays information in the same format as the current alarm display

An alarm subscreen is available to display the oldest three unacknowledged alarms in the system This display presents information in the same format as the current alarm display

The alarm summary alerts the Operator when points are in alarm The critical alarms re-alarm after a specified time period A point that is in alarm appears on the alarm summary display until it is acknowledged by the Operator from the keyboard

The DCS provides the ability to search the system for alarms that occurred previously (residing in memory of long term storage optical disk)

All alarm values and states may be assigned different priorities The priorities are flagged and differentiated by color on the CRT alarm display printout

Alarms

A separate graphic alarm display feature is provided for monitoring cabinet power, communication, and hardware operation Additional displays accessed from this display shall allow the Operator to identify

- Module's location (address on communication bus)
- Type of module
- Diagnostic description

The DCS provides alarms on the operator CRT's and interface with alarms from other systems such as CTG (Combustion Turbine Generator), STG (steam Turbine Generator), BOP (BOP), water treatment, electrical power systems, and so on

A record of all alarms is available in hard copy from the OCC printer This includes alarm description, time of occurrence and time the event returned to normal status

Cutout Logic

Cutout logic (logic to prevent an alarm from annunciating needlessly) associated with the operating alarms is assignable to process variables so that when a specific condition exists (e g , equipment is taken out of service) alarm monitoring of the process variables having cutout logic stops Alarming is automatically restored when the condition no longer exists The cutout logic may use the state of any digital process variable or a calculated result of the Boolean equation using analog and digital process variables

An audible alarm sounds continuously when any new alarm is generated The alarm is silenced when it is acknowledged by the Operator Different audible alarms may be assigned to different alarm priorities or different units The Operator can acknowledge or silence any alarm from OCC

Graphic Displays

Pictorial or schematic displays of plant systems, flow diagrams, equipment sketches, single line diagrams, and so on are used extensively to display data Each display includes alphanumeric and graphic symbols that can be programmed to change color or shape, or blink, as a function of different states of the process variables All process variable values and states can be dynamically updated each second Overview, faceplate and detail (single loop) displays are provided as part of the control system initialization

Bar Charts

Bar charts are programmable to show process variable profiles such as CTG exhaust temperatures in bar chart form Process variable scales and group alarm limits can also be displayed Variables in alarm can be displayed in a different color than variables within alarm-limits Bars can be displayed horizontally or vertically Bar charts can handle up to 40 points horizontally or 64 points vertically per screen Bar chart colors are field programmable

Trending

The DCS is capable of displaying trends in several different ways These different types of displays are

Real-Time Trending

The system can trend any point defined on the data highway The user can select a sample whose update cycle will be as fast as its scan update cycle and can select multiple trends on the same scale with top and bottom scales in engineering units Real time trends can be included within faceplate and custom graphic displays and can be of any size

Short-Term Trending

CRT trends can graphically display the relationship of up to four analog variables (Y-axis) vs time Alphanumeric information can be displayed on the same screen to identify points, scales, current values and related information X vs Y plots are also available The DCS system maintains a 24 hour history of up to 200 process variables for short durations (startup another 200 process variables are available for one hour history) Any standard or custom graphic display using CRT trends automatically retrieves the full history of a plotted variable if it is one of the 400 active points The DCS system assigns its own set of 400 process variables for collection and is field selectable Ten seconds, one minute, one hour and one day display intervals are available

762

Long-Term Trend Capability

The user can trend any value stored in the historical data base, including analog, calculated, and digital values Capabilities include

- Trending of up to four variables simultaneously at scales ranging from one minute to 72 hours, and up to data available on optical disk
- Compression and expansion of trends between predefined scales
- Scrolling back and forth in time in full page and half page increments
- Copying any trend in color to a printer with one keystroke
- Predefined sets of long-term trend screens are accessible from the keyboard or custom graphic displays

7 5 5 Types of Displays

There are a number of different types of displays available in the DCS The different types of displays have different capabilities This section describes the types available and their uses

Group Display

Group displays show a trend line of historical information for any six points in the system The Operator can choose a time based for display to a maximum of 72 hours All available time-base selections are noted This trend display is automatically updated directly from control processor and input modules

Alphanumeric Group Displays

Groups of up to 96 points can be displayed on the CRT with current updated values The groups may be both predefined and operator assignable The minimum information displayed includes process variable name, description, value, engineering units and current status All points in a group can be displayed through paging keys

Overview Display

The overview display can display control loop tag names and their associated values or logic states Alarm conditions for each tag name displayed are indicated by High, Low, Deviation, or Logic descriptors

Performance Calculations

The DCS performs a number of performance calculations on-line This is an important feature because it allows the plant staff to identify problems as they develop and often before they result in catastrophic failure that might cause a forced outage On-line performance monitoring also makes it possible to operate and dispatch the plant more efficiently since comparison of efficiency in different modes of operation can be determined during plant operation

Logs

The DCS can collect, display, and store data in the form of a log A number of different types of logs are available This section describes these logs The collection and printing of these logs is initiated automatically at prescribed time intervals, and can also be initiated on Operator demand or by the occurrence of predefined events (such as the trip of the main generator breaker for a unit) Programmed log formats include a header containing log title, subtitle, date and time of print out Column oriented logs also contain a 30-character description of each process variable in the header Column headings include the process variable name and engineering units of 12 points per page All logs are page oriented, that is, one page of data is accumulated in memory and output without interruption on the printer

In general, any process variable can be assigned to any log or logs on line through the EWS In addition, a restricted set of logs are available for Operator assignment for short term digital trending The number of data values collected, the frequency of collection, and the time of printout are all assignable The Operator can print out the accumulated data of any log at any time

The instantaneous value of any process variable can be collected In addition, the average, integral over specified time, maximum or minimum value can also be collected for each variable A set of summary lines is available at the end of the log to define for the entire log period the average, total sum, maximum or minimum value, and time of maximum or minimum value for each column of data collected

Totally free format reports may be specified Free format reports may be generated through the EWS using a Report Builder which allows the user to combine real time data, historical data, entered data, and arithmetic combinations of these data on a single printed page The page provides a field size of 132 by 60 characters By use of a PC interface, the data is available as displays in D-base software format

Sequence of Events Log (SOE)

The system has the capability for high speed sequence of events recording Upon detecting a change of state of any of the sequence of events contact inputs, the system stores the event Subsequent change of state of any sequence of events contact inputs is stored in proper sequence The stored events are available for printing automatically after a fixed time delay The first change of state entry includes the time of initiation with subsequent entries showing elapsed time (in milli-seconds) from the time of the first trip

Each sequence of events input has the ability to be assigned an individual programmed time delay to compensate for response time characteristics of sensing relays and other process devices This allows the system to list process events in corrected sequence rather than detected sequence

Each input is selectable through the EWS as to whether the sequence of events reporting is to occur on a contract opening, or closing, or both The capacity of the sequence of events (SOE) is 240 points for each combined cycle unit and is able to discriminate between events with a resolution of 1 millisecond To help diagnose malfunctions in generating system, the DCS clock is synchronized to within 1 ms to a satellite synchronized clock system

Post Trip Analysis Logs

The system continuously scans and stores in memory the values of preselected variables for a specified time interval before and after a disturbance such as a turbine trip, and can generate a post trip analysis log Up to twenty pages, twelve points per page, are available as a single log or as multiple logs with separate triggers Data is saved at ten second intervals up to ten minutes before a trip and up to ten minutes after a trip

It is possible to assign or delete variables to be included in the post trip analysis log and enter the pre-trip/post-trip time intervals from the EWS A plant trip may be simulated to obtain a post trip analysis log on demand Each log can save all data from a second plant trip while information is being printed from a first trip

Scheduled Logs

The system can automatically accumulate periodic data on an hourly, daily, and monthly basis for plant performance monitoring The data accumulated is instantaneous inputs or calculated values, or averages or integrations of the data, with a summary printed at the end of the log period

Diagnostic Logs

The system can accumulate predefined data on major pieces of plant equipment Those logs can be initiated upon the occurrence of certain special events and collects data for predefined time periods or until the circumstances are no longer valid Examples are boiler start-up, turbine shutdown, and various abnormal event logs

766

Equipment Operation Logs

A set of selected digital inputs associated with the starting and stopping of major plant auxiliaries is monitored The log includes the process variable name, description, number of accumulated system starts or cycles, and number of hours of operation These logs can be used to determine the amount of time certain pieces of equipment have been operating under normal and abnormal conditions This information is helpful for the scheduling of preventative maintenance

Operator Trend Logs

The Operator can assign a group of process variables to a log for trending purposes Each group has a unique header and contains up to 12 process variables per page

Combined Cycle
Principles Course
Module 8

Integrated Combined Cycle Plant Operation

FCS
Fossil Consulting Services, Inc.

Columbia, Maryland

768

TABLE OF CONTENTS

Section	Page
8 0 INTEGRATED COMBINED CYCLE PLANT OPERATION	1
8 1 Startup Considerations	1
8 1 1 Normal Startup	1
8 2 Operating Modes	14
8 2 1 Base Load	14
8 2 2 Cycling Duty	17
8 2 3 Peak Loading	19
8 3 Shutdown of Combined Cycle Plants	20
8 3 1 Normal Shutdown	20
8 3 2 Emergency Shutdown	21
8 4 Layup	22

8 0 INTEGRATED COMBINED CYCLE PLANT OPERATION

Combined cycle plant operations vary significantly from traditional rankine cycle power plants Although standard operational considerations are given to the balance of plant support systems, specific considerations must be given to the combustion turbine, heat recovery steam generator (HRSG), and steam turbine

8 1 Startup Considerations

8 1 1 Normal Startup

Prior to unit startup, all support systems, power sources, and control devices must be checked and aligned for operation Typically, these checks depend on individual station operating procedures and requirements, but may include such areas as correct valve alignment, correct power supply breaker positions, returning tagged out equipment to service, aligning control systems for startup/operation, and ensuring all safety equipment is in place and functional

Upon successful completion of the necessary prestart checks, the unit can be started and brought up to base load operation The operational sequence for a combined cycle plant startup consists of the following major steps

1 Placing the necessary balance of plant support systems in operation such as compressed air, circulating water, condensate, boiler feed, etc

2 Starting the combustion turbine/HRSG

3 Generating steam

4 Starting the steam turbine

5 Increasing unit load

Combustion Turbine Startup

Combustion turbine generators are provided with digital control systems which are programmed to sequentially start the unit and place it in service, generally at the push of a button The control system also starts and stops base mounted and auxiliary equipment which supplies cooling, lubrication, fuel and protection for the combustion turbine and the associated generator Once a start command is initiated, the control system progresses through an automatic sequence to bring the combustion turbine generator from a standstill condition to a preselected point of operation, i e synchronized and electrically loaded For G E Frame 7FA combustion turbines, the preselected load options consists of the following

- SPINNING RESERVE - The minimum load control point based on generator output The spinning reserve magnitude in megawatts is typically 5 to 10% of the maximum rated output

- PRE-SELECTED LOAD - A load control point based on generator output only, i e a specific megawatt value The pre-selected load point is normally set below the base load point, typically 50 to 60% of the maximum rated output

- BASE LOAD - The normal maximum loading for continuous turbine operation as determined by turbine exhaust temperature levels The actual megawatt output during base load operation will vary with ambient conditions since the combustion turbine exhaust temperature is utilized as the limiting factor

- PEAK LOAD - The maximum allowable output permitted for relatively short-duration, emergency power requirement situations consistent with acceptable turbine parts life Peak loading duration is based on the absolute maximum turbine exhaust temperature levels

771

In combined cycle applications, "Spinning Reserve" is typically selected as the load option when starting the unit from cold conditions Automatic loading of the unit to the 2 to 10 megawatt spinning reserve setpoint provides a positive, non-fluctuating electrical load on the generator without exhausting excessive heat into the HRSG

Although each combustion turbine manufacturer provides control systems programmed with fully automatic start capabilities, it is extremely important for operating personnel to be familiar with the start sequence and to be aware of the key operating parameters Once a start command is initiated, the combustion turbine starting device will spin the turbine to a specified speed to purge the HRSG of combustible gases The combustion turbine is maintained at the purge speed for a specified length of time to allow 3 to 4 exchanges of air in the HRSG casing structure Upon completion of the purge, the starting device will de-energize/disengage allowing the combustion turbine to coast down in preparation for the startup sequence, i e ignition, acceleration, synchronization, and loading

During the startup sequence, once the turbine increases to ignition speed, the operator should closely monitor flame presence, rate of acceleration, and combustion temperature Combustion temperature is typically monitored as either the turbine inlet temperature, turbine outlet temperature, or both Combustion turbine control systems are programmed to control fuel flow to the combustor to continuously accelerate the turbine without exceeding a specific turbine inlet or exhaust gas temperature During a normal startup, the combustion temperature will increase at a somewhat gradual rate If, however, the combustion temperature increases at an extremely accelerated rate, the operator should not hesitate to trip turbine This may indicate a control system malfunction or a malfunction within the regulation of fuel flow to the turbine As an overall protective function, the control system will trip the turbine if the turbine inlet or exhaust temperature exceeds a specific setpoint

During the acceleration period of the startup, the turbine inlet and exhaust temperatures will be much greater than when the unit is at idle speed In particular, a critical period in which over-temperature damage can occur during the startup phase is before the turbine reaches governing speed During this period of the startup, air flow through the turbine has not yet increased to a point where the turbine is able to accelerate away from excess fuel As the turbine approaches idle speed, i e the

772

increased rotational speed results in the compressor forcing more air through the turbine, the turbine inlet and exhaust gas temperature will decrease to a normal operating value Because an excess amount of heat is required to accelerate combustion turbines to idle speed, one start deteriorates the equivalent of 20 - 30 hours of normal operational life to the hot gas path components

Once the combustion turbine reaches idle speed, the generator may be synchronized to the grid With automatic generator synchronization selected, the control system will read, compare, and adjust turbine-generator speed and generator voltage to match system requirements The generator is then connected to the system by closure of the generator breaker Synchronization of the turbine-generator unit to the distribution system can be automatic, as stated above, or manual In either case, relaying and control components compare and display on the control panel, critical information useful in the proper connection of the generator to the system

Upon automatic synchronization, if no load point is selected, the unit will automatically load to the SPINNING RESERVE load point The SPINNING RESERVE load point is slightly greater than no load, typically 8-10% of the base rating An intermediate load point, PRESELECTED load, and temperature control load points BASE and PEAK can be selected anytime after a start signal has been given When a particular load option is selected, the control system will increase turbine generator load at a programmed rate, typically 3 to 10 megawatts per minute

In the manual synchronization mode, the operator adjusts turbine-generator speed and generator voltage before closing the breaker Manual loading can be accomplished by gradually increasing the speed setpoint from either the control system CRT, or from the generator control panel Manual loading beyond the selected temperature control point, BASE or PEAK, is not possible Manufacturers generally deliver "maximum loading rate" specifications with each combustion turbine generator At a maximum, combustion turbine load should never be changed more than 25% of full load in any one minute period

HRSG Startup

The HRSG, located at the exhaust end of the combustion turbine, efficiently utilizes the excess thermal energy in the combustion turbine exhaust gases to generate high pressure, superheated steam Because of its location, the HRSG is automatically placed in operation in conjunction with the combustion turbine

In some combined cycle plants, a bypass stack and damper is installed between the combustion turbine and the HRSG In the bypass configuration, exhaust gases from the turbine can be diverted directly to the atmosphere instead of passing through the HRSG Regardless of the specific combustion turbine/HRSG arrangement, similar considerations are applicable the startup and operation of all HRSGs

The HRSG must be prepared for operation prior to initiating a start of the combustion turbine Preparing the HRSG for operation consists of following evolutions

- Filling and venting the feedwater heater
- Establishing deaerator water level and steam pressure
- Filling and venting the economizers
- Establishing steam drum water level
- Opening the superheater and reheater vents and drains

When starting the combustion turbine and HRSG from cold conditions, a focus of primary concern must be placed on the operation of the HRSG and its limited physical ability to withstand a rapid increase of temperature If combustion turbine load, i e exhaust gas temperature, is increased at an accelerated rate, excessive thermal stress is induced on the pressure sections of the HRSG If the combustion turbine exhaust gas temperature is increased significantly above the HRSG tube metal temperatures, steam/water hammering and metal fatigue will result Therefore, upon synchronization to the electrical grid, the combustion turbine <u>must</u> be maintained at a minimum megawatt load until the HRSG is sufficiently warmed and the temperatures of each pressure section have stabilized

774

A simplified schematic of a single pressure, reheat HRSG is illustrated in **Figure 8-1** As illustrated, the HRSG feedwater heater is located at the back of the casing structure, near the exhaust gas exit to the stack This location is ideal for the intended purpose of the feedwater heater, which is to utilize the remaining thermal energy from the combustion turbine exhaust to preheat feedwater enroute to the deaerator When designing a HRSG, the manufacturer calculates, constructs, and locates each bank of tubes to absorb a specific amount of thermal energy from the exhaust gas flowpath when the combustion turbine is operating at "base load" As a result of these calculations, the amount of available thermal energy at each progressive location, from the inlet to the outlet of the HRSG, can be determined The heat exchanger segments of each pressure section are arranged, respective of each other, to take maximum advantage of the temperature difference between the exhaust gas and tube side temperatures

A basic law of thermodynamics states that the rate of heat transfer from hot to cold is dependant upon the temperature difference between the objects HRSGs are designed on the basis of this thermodynamic principle During base load operation, with steam and water flowing through the respective boiler tubes, the temperature of the combustion turbine exhaust decreases as it progresses through the HRSG By the time the exhaust gas reaches the feedwater heater, the exhaust gas temperature has been reduced to less than 300°F As per design calculations, the feedwater heater is sized with the appropriate heat transfer surface to obtain a specific water outlet temperature when the unit is operating at base load As illustrated in **Figure 8-1**, the pre-heated water is routed to the deaerator

Upon initial startup of the combustion turbine, the hot exhaust gases pass through the HRSG without a significant reduction in temperature Even though each pressure section absorbs "some" heat from the exhaust gases during startup, none of the absorbed heat is removed from the HRSG in the form of steam Upon combustion turbine startup, the temperature of the gases at the exhaust stack is nearly equal to the temperature of the gases at the combustion turbine exhaust

775

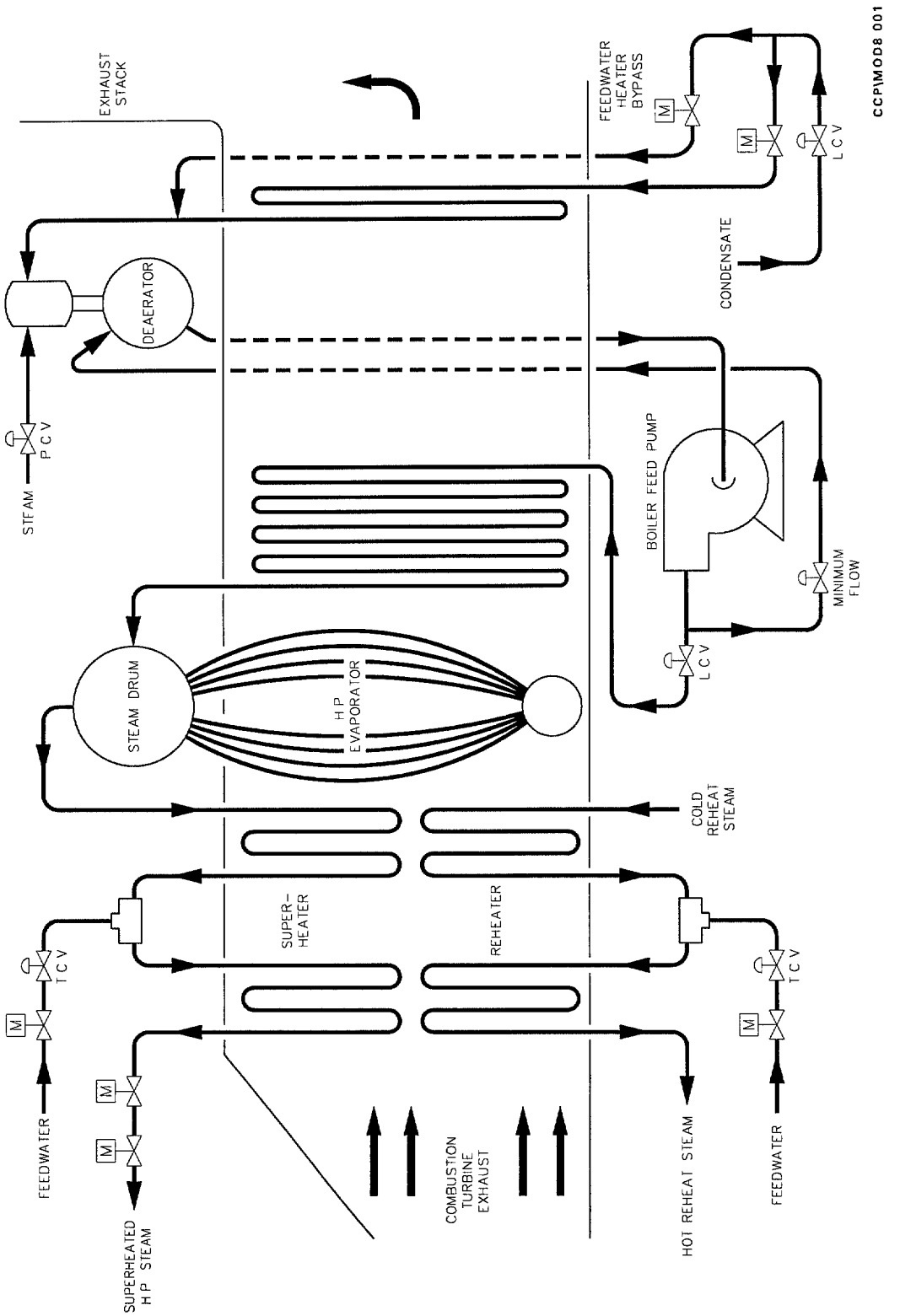

Figure 8-1 Simplified Schematic of HRSG

776

Therefore, the startup period can be basically considered a "preheat stage" in which the temperature difference between the exhaust gas and the boiler tubes decreases, i e they equalize Although this preheat stage is required in order to prevent excessive thermal stress to the boiler tubes and steam drum, the feedwater heater temperature eventually increases to well above its designed, base load, inlet temperature of 300°F

Throughout the preheat stage, the "high exhaust stack temperature" condition remains present even as combustion turbine generator load is increased and the HRSG begins to generate steam Until the steam drum begins to develop significant steam flow, the removal of thermal energy (steam flow) from the HRSG is inappreciable Likewise, feedwater makeup to the steam drum is at a minimum during this period and therefore, the economizer is absorbing very little thermal energy from the exhaust gas flowpath During this period, makeup water to the deaerator is bypassed around the feedwater heater to prevent exposing the water to the higher than normal gas temperatures at the exhaust stack If the water were allowed to pass through the feedwater heater, it would absorb so much heat that some of the water would flash into steam upon entering the deaerator Not only would this condition result in excess pressure within the deaerator, but the "design" temperature limitations of the boiler feed pumps would be exceeded resulting in accelerated wear and damage to the pump internals

Once the HRSG begins to generate steam, the load on the combustion turbine generator can be gradually increased at the programmed rate of approximately 3 to 10 megawatts per minute As more load is placed on the combustion turbine generator, the exhaust gas temperature increases proportionately, and the result is increased steam production When the combustion turbine generator reaches 40-50% of base load, the transfer of thermal energy through the HRSG will have increased to a point where the exhaust gas temperature at the feedwater heater is near its normal operating value At this point, the feedwater heater inlet isolation valve can be opened, and the bypass closed

When increasing combustion turbine load and consequently, HRSG steam production, the metal temperature differential between the top and bottom of the steam drum should not exceed 210°F An excess temperature differential will cause

777

undue stress to the steam drum If an excessive temperature difference is noted, changes in combustion turbine load should cease until the temperatures stabilize

Steam Generation

Steam from the HRSG superheater is supplied to the steam header for use by the steam supply systems and the steam turbine The control of steam flow from the superheater outlet is generally through a motor-operated stop check valve and steam stop valve, as illustrated in **Figure 8-1** The position of the valve motor operators is typically controlled from the Operator Keyboard at the DCS

During startup of the HRSG, the motor operators for the stop check valve and the steam stop valve are moved to the OPEN position before the steam drum begins to develop steam pressure As the HRSG heats up, steam will flow through stop check valve and begin to warm the steam header During this period of the startup, the combustion turbine is maintained at minimum load Once the HRSG and the steam system piping are completely heated and pressurized, the combustion turbine load can be increased to meet the prestart steam requirements of the steam turbine

In multiple unit applications, if the steam header is already pressurized prior to HRSG startup, the disk of the stop check valve remains seated due to the already pressurized steam header Once the steam drum increases to a pressure equal to the steam header, the check valve will slowly open and steam will begin to flow through the superheater from the drum Once steam flow through the superheater and reheaters is sufficient, the applicable vent and drain valves are closed It is very important that the drum water level be closely monitored during the transition period when steam is initially delivered to the system

HRSG Drum Level Control

Maintaining proper steam drum level is a critical function and can not be overstressed An excessively high drum level will flood the moisture separators located within the steam drum, resulting in moisture carry over to the superheater and

778

a steam turbine trip An excessively low drum level will result in decreased steam output, overheating of the economizer, evaporator, and superheater tubes and a combustion turbine trip

Drum pressure is a result of drum level combined with the generation of steam in the evaporator tubes The drum pressure will fluctuate with changes of load demands on the steam system During a sudden steam load increase, drum pressure will decrease This will result in a false high level condition known as "swell " During a sudden decrease of steam demand, steam drum pressure will increase and result in a false low level condition known as "shrink " In some situations, the tuning of the steam drum level control loop may not respond quick enough to maintain proper drum level during such abnormal conditions In this event, the Operator may be required to take MANUAL control of the level control valves

Steam Turbine Startup

The next progressive step of bringing a combined cycle plant up to base load operation, is to preheat and start the steam turbine In general, proper warmup of the steam turbine may take up to several hours If an external source of steam is available, preheating of the steam turbine can begin prior to startup of the combustion turbine to facilitate the overall startup process In some applications however, the HRSG may be the only means of producing steam at the plant

Upon startup of the combustion turbine and HRSG, the steam generated by the HRSG is routed to the condenser through the steam turbine bypass valve(s) The bypass valve is modulated to control steam flow to the condenser and consequently, HRSG steam drum pressure

Steam Turbine Prewarming

One of the primary concerns of steam turbine operation is the gradual and uniform heating and cooling of the rotors, shells, and valves Controlling the rate of metal temperature change is necessary to ensure excessive thermal stresses do not occur in any portion of the turbine metal Each steam turbine manufacturer provides starting and loading instructions for each specific steam turbine application These

779

instructions are designed primarily to minimize cyclic damage to the turbine rotor, but they also have the effect of limiting cyclic damage to the turbine shell In general, the starting and loading instructions contain recommended temperature ramp rates, acceleration rates, soak periods at different holds, and generator loading rates If properly followed, the starting and loading instructions will increase the availability and reliability of the turbine components

During steam turbine prewarming and startup, the operator must be aware of the following limitations

- Thermal stress and distortion
- Vibration
- Rotor and shell differential expansion

Any of the above limitations may be introduced by subjecting the turbine metal to excessive temperature mismatches and/or rates of temperature change One of the above limitations is likely to be reached before the others, depending on the turbine design and configuration, although the other two may be present to a significant degree

Ramp rates are maintained during steam turbine startup by careful matching of the first stage and reheat steam temperatures to the corresponding metal temperatures The steam-to-metal temperature difference should be maintained as small as possible The main steam pressure and temperature should be controlled in such a way to produce a steam-to-metal temperature difference of 50 to 100°F This match, or slightly positive mismatch, is an important factor is establishing and maintaining the desired ramp rate Proper control of the thermal ramp is primarily achieved controlling the main and reheat steam temperature, and by controlling generator load upon synchronization to the grid

First-stage steam temperature is affected not only by throttle steam temperature, but by boiler pressure and temperature, and the resultant throttling at the turbine admission Lower pressures result in a higher first-stage steam temperature at the same initial steam temperature

Maintaining Steam Temperature and Pressure

During the steam turbine warmup process, the steam seals can be placed in service followed by the application of the condenser vacuum system Once the steam flow and temperature from the HRSG has stabilized, the combustion turbine generator load can be gradually increased to meet the steam turbine prestart requirements, i e steam flow, pressure, and superheat With all requirements met, the steam turbine is rolled off the turning gear and brought up to synchronizing speed

As previously illustrated in **Figure 8-1**, steam from the HRSG steam drum must be superheated to a controlled temperature before entering the steam turbine To accomplish this, steam from the drum is routed through a superheater, where its temperature is increased above the saturation point This initial superheating of the steam brings the steam temperature and pressure to the correct conditions before the admission of spray water (attemperation) which provides downstream temperature control Spray water is admitted into the attemperator based on the steam outlet temperature from the superheater Typically, a pneumatically operated temperature control valve is provided to modulate spray water flow into the attemperator in a effort to maintain the correct steam temperature to the steam turbine

Prior to steam turbine operation, HRSG drum pressure is controlled through the throttled position of the steam turbine bypass valves However, once the steam turbine generator is synchronized and electrically load, the bypass valves are modulated closed to provide full steam flow to both the steam turbine and the steam host At this point of the plant startup, steam pressure and flow is controlled by increasing the electrical load on the combustion turbine generator, i e increased exhaust gas temperatures result in increased steam production and steam superheat

8 1 2 Fast Starts

As previously discussed in Section 8 1 1, Normal Startup, there are specific points of a combined cycle plant startup where proper warmup of components must take place, i e the HRSG and steam turbine These warmup periods are critical to the life expectancy of the plant equipment and must never be ignored or bypassed

781

However, upon a plant shutdown or trip, the HRSG, steam turbine, and the associated piping and components will already be at or near operating temperature Only under these circumstances, can a fast start be performed By definition, a hot restart of a steam turbine is one in which the first-stage shell inner metal temperature is greater than 700°F

In terms of combustion turbine combined cycle operation, a fast start refers to the increased rate at which the plant load is increased upon a successful start and synchronization of the combustion turbine It must be noted, there is not a means of bypassing or accelerating the "programmed start sequence" of the combustion turbine The limiting factor during a fast start is the ability of the HRSG to accept a large mass of thermal energy at an accelerated rate However, if the HRSG is already "hot" from recent operation, combustion turbine load can be safely increased

During a fast start, once the combustion turbine generator is synchronized and electrically loaded, the operator may load the unit to either a preselected load value or allow the unit to assume base load The actual loading rate is often programmed by the manufacturer to protect the combustion turbine and HRSG from thermal damage For example, a loading rate of 5 megawatts per minute is not uncommon for an industrial (frame) combustion turbine Aero-derivative units are generally capable of faster loading rates since the overall mass of their components is a fraction of the larger frame units When determining loading rates, each combustion turbine manufacturer takes the following parameters into consideration

- Vital clearances between rotating parts
- Thermal fatigue of metal parts
- The rate of differential expansion, not only between parts of different materials, but between parts of different thicknesses

8 2 Operating Modes

The purpose of any combined cycle power plant with a QF Status (qualified facility) is to, 1) supply steam to a thermal host, and 2) generate electricity The requirement of supplying steam to a thermal host is the primary variable in obtaining a QF status As such, once the plant is operating, the steam requirements of the thermal host must be continuously met in order to maintain the QF status

Although the steam demands of the thermal host are generally within specified limits, the actual steam demand may change at any given time To facilitate this variable, the steam turbine stop/control valve is typically operated in a sliding header pressure mode, i e it serves as a back-pressure regulator In this configuration, the production of steam from the HRSG can remain constant regardless of the steam demands by the thermal host Then, as the steam demands of the thermal host change, the steam turbine stop/control valve modulates to maintain header pressure at a predetermined setpoint with the excess steam flowing to the steam turbine

8 2 1 Base Load

Manufacturers publish the rated output of their combustion turbine generator sets based on industrial standard operating (ISO) conditions Two of the major factors defined in an ISO rating are a compressor inlet temperature of 59°F and the specific altitude, with respect to sea level, which the unit in installed Since the power output of a combustion turbine is very sensitive to changes in ambient temperature, the use of ISO conditions have been standardized throughout the industry to insure uniform methods of rating combustion turbine shaft horsepower and generator output

As air cools, it's density increases Likewise, warmer air decreases in density Cool, dense air at the inlet of the combustion turbine compressor results in increased mass air flow through the turbine and an increased cooling of the combustor and turbine sections As a result, during cool ambient conditions, increasing fuel flow to the combustion section can be accomplished without exceeding the maximum allowable turbine inlet temperature The combined effect of increased mass air flow

and increased fuel flow (Btu's) through the turbine section, results in an increase of combustion turbine shaft horsepower Consequently, as ambient temperatures increase, a decrease of shaft horsepower occurs even when the turbine inlet temperature is maintained at maximum allowable value

The most critical area of a combustion turbine is the hot gas flowpath through the turbine section Experience has shown that wear in this area is directly related to the combustion gas temperature at the turbine inlet Since combustion turbine generators operate at a continuous synchronized speed, the combustion gas temperature at the turbine inlet is a function of, 1) the amount of fuel burned, or level of power, and 2) ambient temperature

Base load operation of a combustion turbine generator is not based on maintaining a constant power output, but on maintaining a constant turbine inlet temperature and allowing shaft horsepower to vary as changes in ambient temperature occur When base load operation is selected, the combustion turbine control system increases or decreases fuel flow to the combustor in an effort to maintain the maximum allowable turbine inlet temperature regardless of ambient conditions Consequently, the change of fuel flow, and thereby shaft horsepower, results in a corresponding change in generator megawatt output

The highest temperature attained in the combustion turbine occurs in the combustion chambers and at the turbine inlet This temperature must be limited by the control system to prevent thermal damage to the turbine section Some combustion turbine control systems are designed to measure and control turbine exhaust temperature because it may be impractical to measure temperatures in the combustion chambers or at the turbine inlet directly The indirect control of turbine inlet temperature, called firing temperature, is possible through known turbine performance relationships For example, the exhaust temperature alone does not fully determine firing temperature, the measured compressor discharge pressure is also required

784

In addition to exhaust temperature control, there are several other control and protective functions incorporated into the combustion turbine controls to ensure safe operation of the unit These include such variables as shaft vibration, bearing temperatures, oil pressures, etc Although each of these variables are equally important and critical to the operation of the combustion turbine, exhaust temperature is of primary concern when operating the unit at base and peak load It must be noted, excessive firing temperature can damage the turbines hot gas path components

When operating the combustion turbine at base load, the control system compares the exhaust temperature control setpoint with the actual combustion turbine exhaust temperature as measured from thermocouples mounted in the exhaust plenum These thermocouples are located on the circumference of the turbine exhaust and provide representative input signals to the control system In addition, some combustion turbines are equipped with thermocouples which sense the wheelspace temperatures between each turbine stage

Daily reading of the turbine exhaust and wheelspace temperatures aid in monitoring the turbine's combustion characteristics and in detecting faulty thermocouples Aside from the actual temperature indications, the "temperature spread" between the highest and lowest temperatures around the circumference of the turbine exhaust must be closely monitored

Throughout the life of the combustion turbine, it is important to define a "baseline value" of exhaust temperature spreads with which to compare future data This baseline data is established during steady state operation after each of the following conditions

- Initial startup of unit
- Before and after a planned shutdown
- Before and after scheduled maintenance

An important point regarding the evaluation of an exhaust temperature spread is not necessarily the magnitude of the spread, but changes in the spread over a period of time Accurate recording and plotting of exhaust temperatures on a daily

785

basis can indicate a developing problem Such problems may be the result of faulty thermocouples, deteriorated/damaged turbine blades, deteriorated/damaged combustion liners, or a blockage in the cooling and sealing air flowpath Each combustion turbine manufacturer specifies maximum allowable temperature spreads and wheelspace temperature operating limits which can be found in the technical reference materials delivered with the unit In general, an allowable temperature spread may be between 30°F and 105°F

It is important when reviewing exhaust temperature readings to observe any trend which may indicate deterioration of the combustion system Gradual and/or sudden temperature excursions should be investigated as soon as possible to determine the validity of readings

8 2 2 Cycling Duty

Cycling duty refers to gradual, yet significant changes, either increases or decreases, in unit output In combined cycle applications, the electrical output from both the combustion and steam turbine generators can be simultaneously changed to a target value However, when making these changes, it must be remembered that adequate steam supply to the thermal host must be maintained at all times

When the unit is operating at or near base load, unit output can be changed by simply decreasing the electrical load on the combustion turbine generator Doing so will reduce fuel flow into the combustion turbine, and as a result, the exhaust gas temperature will decrease A reduction of thermal energy into the HRSG will consequently result in decreased steam production Assuming steam flow requirements to the thermal host remain relatively constant, the reduction of steam production directly affects the amount of shaft horsepower developed by the steam turbine and consequently, the electrical load of the generator This is true since the steam turbine stop/control valve serves as a back-pressure regulator to maintain steam header pressure at a predetermined setpoint, with the excess steam flowing to the steam turbine Likewise, unit load can be increased based on the above stated concept

Load changes, and consequently thermal swings, increase equipment wear and tear Of the three major components in a combined cycle plant, the combustion turbine and HRSG are not adversely affected by cycling duty However, the steam turbine is extremely sensitive to load changes

During steady state steam turbine operation, the combined thermal and pressure stresses in the stop/control valves and turbine shell, and combined thermal and centrifugal stresses in the rotor are maintained at relatively low levels However, during transient operations such as startups, shutdown, and load changes, large thermal stresses can be superimposed on the steam turbine shell, control valves, and rotor The life expenditure of a steam turbine depends on the level of combined stresses developed during each transient swing One of the primary concerns during combined cycle operation is to limit these stresses to an acceptable level by suitably controlling the rates of temperature change

Some combustion turbines are equipped with variable inlet guide vanes (IGV's) which are dynamically positioned to control the amount of air flow into the compressor stages In such applications, the pivoting stems of the IGV's are mechanically linked together such that the rotation, or angled position, of all the vanes is always the same During normal operation, the combustion turbine control system positions the inlet guide vanes through the use of a hydraulic actuator to ensure optimum combustion turbine performance However, a manual mode of operation is typically available in which the operator can take manual control of the inlet guide vanes at the control system interface

The ability to manually control the position of the combustion turbines inlet guide vanes, increases the flexibility of the combustion turbine in a combined cycle application For example, if it is desired to decrease the combustion turbine generator megawatt load while maintaining sufficient steam supply to the thermal host and support the minimum steam flow and superheat requirements of the steam turbine, the IGV's can be modulated towards the closed position to reduce air flow through the combustion turbine and at the same time, maintain the combustion temperature at the base load value As stated, IGV's offer the flexibility to maintain combustion turbine exhaust gas temperature at the base load value during low megawatt loading of the combustion turbine generator As a result, steam production and superheating within the HRSG is not adversely affected

However, it must be noted that combustion turbines equipped with dry, low NOx combustors typically do not have provisions for manual modulation of the inlet guide vanes Since the fuel-to-air ratio in these units is extremely critical, random changes in compressor air flow would result in either a flame out condition or excessive NOx emissions

8 2 3 Peak Loading

Manufacturers design combustion turbines with more than ample margins for thermal and dynamic stresses on the combustion section, turbine section, generator ventilation, equipment coolers, etc As a result, each unit is designed somewhat better than is strictly necessary This margin of capability is done in an effort to ensure reliability of the turbines as well as long life and trouble-free operation

Some combustion turbine control systems are equipped with a "Peak Load" option When selected, the maximum turbine inlet or exhaust gas temperature setpoint is increased beyond the base load value This allows increased firing temperatures, i e fuel flow, which results in increased shaft horsepower and increased electrical output During peak load operation, an increased amount of thermal energy is exhausted into the HRSG which results in a slight increase of steam production However, the overall integrated operation of the unit is similar to normal base load operation

Although most combustion turbines can safely operate beyond the limits of base load combustion temperatures, such operation encroaches upon the reliable design margin of the machine Consequently, a reduction in reliability and increased maintenance can be expected Accordingly, peak load operation is only used during periods of high electrical demand

If a combustion turbine is overloaded to a point where the turbine exhaust temperature schedule is not followed for reasons of a malfunctioning or improper setting of the exhaust temperature control system, the maximum allowable turbine inlet temperature or the maximum allowable exhaust temperature, or both, will be exceeded Exceeding the manufacturer's firing temperature limitations will result in a corresponding increase in maintenance and, in extreme cases, might result in failure of the hot gas section

788

8 3 Shutdown of Combined Cycle Plants

8 3 1 Normal Shutdown

Similar to a startup, the combustion turbine control system decreases generator load at a programmed rate during the shutdown sequence The rate of load reduction is typically the same as the programmed loading rate, i e 3 to 10 megawatts per minute As combustion turbine load decreases, HRSG steam production decreases proportionately

With respect to the thermal limitations of the combustion turbine and HRSG, a load reduction of 3 to 10 megawatts per minute can be safely performed However, in combined cycle applications, the steam turbine temperature ramp rates are the limiting factor during the shutdown sequence When decreasing steam turbine load, steam flow and temperature must be gradually reduced in accordance with manufacturer recommendations Consequently, combustion turbine load, and therefore steam production, must be gradually decreased to accommodate the temperature ramp rates of the steam turbine

Once the steam turbine is at minimum operating load, it trips on reverse power Upon coasting down, the steam turbine is immediately placed on turning gear to prevent shaft bowing

With the steam turbine removed from service, the combustion turbine is shutdown by initiating a stop signal at the operator control interface Once initiated, an automatic shutdown sequence will decrease generator load at a programmed rate Once the generator load has decreased to a minimum value, the generator breaker is tripped open and fuel to the turbine is decreased until flame can no longer be maintained in the combustion chambers When the turbine speed decreases to a standstill, the rotor turning device is automatically initiated Throughout the shutdown sequence, combustion turbine support systems will be activated or shutdown as required

-189

Immediately following a shutdown, the combustion turbine rotor must be turned to provide uniform cooling Uniform cooling of the turbine rotor prevents rotor bowing, resultant rubbing and imbalance, and related damage that might otherwise occur when subsequent starts are attempted without cooldown Typically, a combustion turbine can be started and loaded at any time during the cooldown cycle

After the combustion turbine is shutdown, the HRSG steam pressure should be allowed to decrease naturally without opening vents or other intentional means of taking steam from the unit to accelerate the lowering of steam pressure A cooling rate exceeding 100°F per hour to 150°F per hour by excessive opening of vents should be avoided to limit drum distortion and the resulting strain on the boiler tube joints Rapid heating or quenching can cause leaking tube joints in the steam and mud drums

Throttled opening of the superheater vent valves permits steam flow through the superheater and permits a modest pressure reduction within the above stated temperature limits Superheater vents can be fully opened when the steam pressure decreases to 15-20 psig Simultaneously, the steam drum vent must be opened to prevent a vacuum from forming within the HRSG pressure sections If it is required to drain the boiler for maintenance, the water temperature must be allowed to cool below 200°F

8 3 2 Emergency Shutdown

Emergency shutdowns are the least desirable method of shutting down any power plant An EMERGENCY STOP or TRIP pushbutton is generally provided to simultaneously trip both the combustion turbine and steam turbine However, a unit trip should only be performed if an emergency condition exist which requires an immediate shutdown If time permits, the electrical load on both generators should be removed over a period of approximately 3 minutes prior to tripping the unit Although this type of a shutdown is still considered highly undesirable, it is preferred over a high load trip

Upon performing an emergency shutdown, both turbines must be placed on turning gear to prevent shaft bowing Similar to a normal shutdown, the steam turbine bypass valves will open to route excess steam to the condenser

8 4 Layup

When not required for operation, the plant equipment must be maintained in a layup condition to preserve its integrity and to prevent internal deterioration and contamination of the piping and components The type of layup required is determined by the time period each system is estimated to be out of service If it is estimated to be out of service less than three months, a short term layup must be performed If three or more months is anticipated, a long term layup will be required

Combustion Turbine

A short term layup maintains the combustion turbine and auxiliary systems in a state of readiness During a short term layup the combustion turbine should be left on turning gear to prevent rotor shaft bow and the settling of the rotor onto the bearings The auxiliary lube oil pump should be operated periodically to supply lubricating oil to the turbine bearings and to prevent the formation of rust in the lube oil piping The lube oil reservoir level and temperature should be maintained at the normal operating level and temperature The out of service lube oil heat exchanger and filter should be filled with oil to prevent the formation of rust All atomizing air low point drains should be opened and the booster atomizing air compressor started once a week to blow out any condensate from the piping All space heaters and motor heaters should remain in service to prevent condensate formation

If the combustion turbine must be placed in a long term layup, the manufacturer should be consulted However, a long term layup for auxiliary equipment requires the lube oil reservoir be drained, cleaned, and dried out Desiccant is then placed into the reservoir to maintain a dry, moisture free atmosphere When closing up the reservoir one or more of the manways may be replaced with a temporary plexiglass window, sealed to provide an air tight closure

191

A humidity indicator can then be attached to the inside of the temporary window to monitor the effectiveness of the layup All fuel lines should be drained and purged to ensure no accumulation of fuel exists thus reducing the possibilities of an explosion

Heat Recovery Steam Generator

Unless boilers are stored properly, they can corrode rapidly, depending on the condition of the metal surfaces The type of lay up required is determined by the time period the HRSG is expected to be out of service If the HRSG is expected to be out of service for several days and will be required to return to immediate service, a wet lay up should be performed If the HRSG is expected to be out of service for longer than one week, and will not be required for immediate readiness for return on short notice, the boiler should be placed into dry storage

A wet lay up can be accomplished with or without a nitrogen cap Nitrogen provides an oxygen free, inert atmosphere on internal surfaces normally exposed to steam or water First, the boiler should be filled to the normal operating water level with deaerated feedwater Using normal light off and warming procedures, raise the pressure in each drum to about 25 psig The vents to the drums should be open to the atmosphere This will expel dissolved gases, notably oxygen, released from the boiling water

The boiler water should be treated with O_2 scavenger By adding about 4 8 pounds of 35% O_2 scavenger solution and 0 1 pound of ammonia per 1000 gallons of water, the alkalinity level of the boiler water will be raised to about 440 ppm By continuing firing the unit, a circulation will help mix the chemicals and provide a representative water sample at the sampling panel for further water treatment An alternate solution is to use caustic soda to raise the alkalinity above 440 ppm Typically, this can be accomplished by adding 3 pounds of caustic soda for every 1000 gallons of water

After the appropriate concentrations have been achieved, the boiler should be shutdown and allowed to cool When the drums have cooled to about 200°F, feedwater should be added to completely fill the boiler to the top of the highest

pressure part The water should be tested weekly to check the alkaline and O_2 scavenger concentrations Add chemicals as necessary to maintain the recommended values

In addition to the wet layup, a nitrogen cap can be placed on the boiler drums and superheaters The nitrogen cap provides an inert atmosphere to prevent the intrusion of oxygen and provides for volumetric variations of the water level due to temperature fluctuations

The boiler should be completely drained and dried before establishing a dry layup All horizontal tubes and superheater tubes should be blown dry with compressed gas Particular care should be taken to purge all water from long horizontal tube sections If bowed, water may collect at the low points To accomplish the best drying, heat should be applied using combustion turbine exhaust

After the surfaces are dried, trays of desiccant should be placed in the gas side of the boiler and in each of the drums The desiccant prevents corrosion by absorbing moisture from the air (humidity) Typical types of desiccant which are useful include

- Quick lime - used at a rate of six pounds per 100 cubic feet of volume
- Silica gel - used at a rate of eight pounds per 100 cubic feet of volume
- Activated alumina - used at a rate of eight pounds per 100 cubic feet of volume

Once dried, a nitrogen blanket is introduced As the nitrogen is admitted, the superheater vents should be opened purge air from the boiler tubes A 5 psig nitrogen blanket provides an inert atmosphere for the boiler and aids in detecting potential leaks

The boiler should be opened at regular intervals (approximately every 3 months) for inspection and replacement of the desiccant If required, the desiccant should be renewed, as it looses its effectiveness as it absorbs moisture Once the desiccant is replaced, the boiler should be blanked off again and the nitrogen blanket reestablished

Steam Turbine

When the steam turbine is to be taken out of service for a short time period, it is essential that the steam turbine be left on turning gear The turning gear minimizes temporary thermal bowing of the rotor This is more important when the unit is restarted after a short time Due to the slow cooling rate of the casing and rotor, the oil pump and coolers should remain in service when the unit is on turning gear

The oil system may be shutdown when the rotor is sufficiently cool When shutting off the oil, the journal temperatures should be monitored If the temperature of the bearings continues to increase, the oil pump should be restarted until the unit is sufficiently cool

If the steam turbine must be placed in a long term layup, the manufacturer should be consulted However, the lube oil system and the turning gear should be operated for several hours each month During this operational period, the operator should look and listen for any signs of deterioration and abnormal operation Any water within the lube oil tank should be drained off and discoloration of the oil should be checked, sampled and the corrective actions taken

A long term layup requires drainage of the condenser hotwell and isolation of the surface condenser and steam turbine Once isolated and drained, warm air is blown into the condenser to purge all moisture and dry the internal surfaces Desiccant is then placed into the condenser to maintain a dry, moisture free atmosphere When closing up the condenser, one or more of the manways may be replaced with a temporary plexiglass window, sealed to provide an air tight closure A humidity indicator can then be attached to the inside of the temporary window to monitor the effectiveness of the layup

Combined Cycle
Principles Course
Module 9

Cooling Towers

FCS
Fossil Consulting Services, Inc.

Columbia, Maryland

795

TABLE OF CONTENTS

Section		Page
9 0	COOLING TOWERS	1
9 1	Introduction to Cooling Towers	1
9 2	Cooling Tower Terminology and Theory	3
9 3	Cooling Tower Heat Transfer Factors	6
9 4	Wet-Bulb Temperature Effects	6
9 5	Design Considerations	7
9 5 1	Natural Draft Hyperbolic Cooling Towers	7
9 5 2	Mechanical Draft Cooling Towers - Crossflow Type	12
9 5 3	Fans and Stacks	13
9 5 4	Counterflow-Type	13
9 5 5	Dry-Type Towers	13
9 5 6	Key Designs Direct and Indirect	14
9 5 7	Effect on Turbine Back pressure	17
9 6	Cooling Tower Test Codes	20
9 6 1	Operating Conditions	22
9 6 2	Constancy of Test Conditions	22
9 6 3	Thermal Lag	23
9 6 4	Instruments and Measurements	24
9 7	Natural Draft Cooling Tower Test Evaluation	27
9 7 1	Characteristic Curve Method	27
9 7 2	Performance Curve Method	29
9 8	Cooling Tower Operation	30

9 0 COOLING TOWERS

9 1 Introduction to Cooling Towers

Waste heat, which must be rejected from the Rankine cycle, needs to be transferred from the primary system to a secondary system that physically removes it to a heat sink, either air or water, where it is dissipated This secondary circuit is commonly called a cooling system, and there are three distinct types

- Once-through cooling, in which the flow of water from rivers, lakes, or the sea serves as the cooling medium
- Evaporative cooling, in which most of the waste heat is dissipated to the atmosphere by evaporation of a small portion of the cooling water
- Dry cooling, in which heat is dissipated directly to the atmosphere

The last two, of course, require cooling towers as the agent for heat dissipation With dry cooling, smaller devices are frequently termed air-cooled heat exchangers Evaporative towers are sometimes called wet towers

If once-through cooling is not feasible evaporative cooling is the next logical option For large power plants, the choice is between hyperbolic, natural-draft (**Figure 9-1**) and mechanical -draft towers (**Figure 9-2**)

The latter use fans, which boost operating cost, but give better control and cost less to erect Selection depends upon cooling requirements, climate, and economics

Cooling towers recirculate water, which can be an advantage over once-through cooling because better control of water quality is possible However, towers usually cannot provide temperatures as low as once-through cooling

Another option is dry-cooling-cooling towers Because air is not an efficient cooling medium, more cooling tower capacity is needed to do the same job This may be expensive, but so is water In water-short areas, wet cooling becomes a problem because of the makeup required Dry cooling towers may be the only practical way to provide the cooling needed

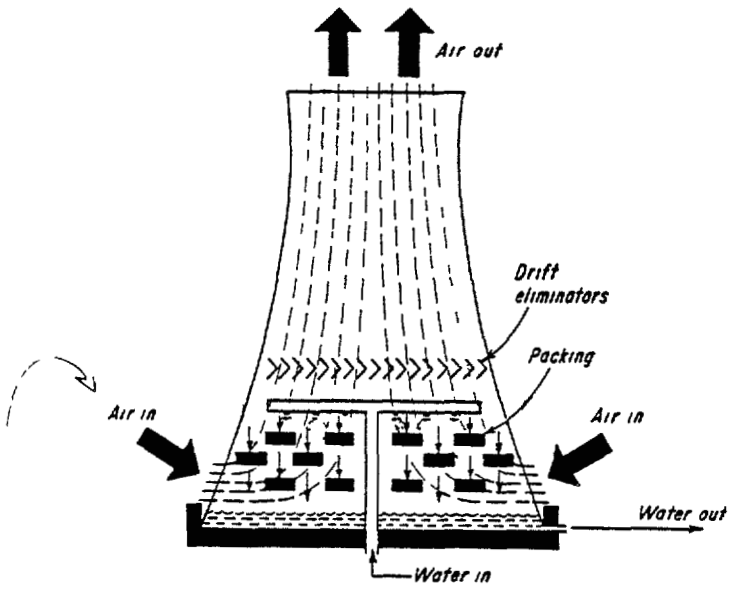

Figure 9-1 Natural-Draft Tower

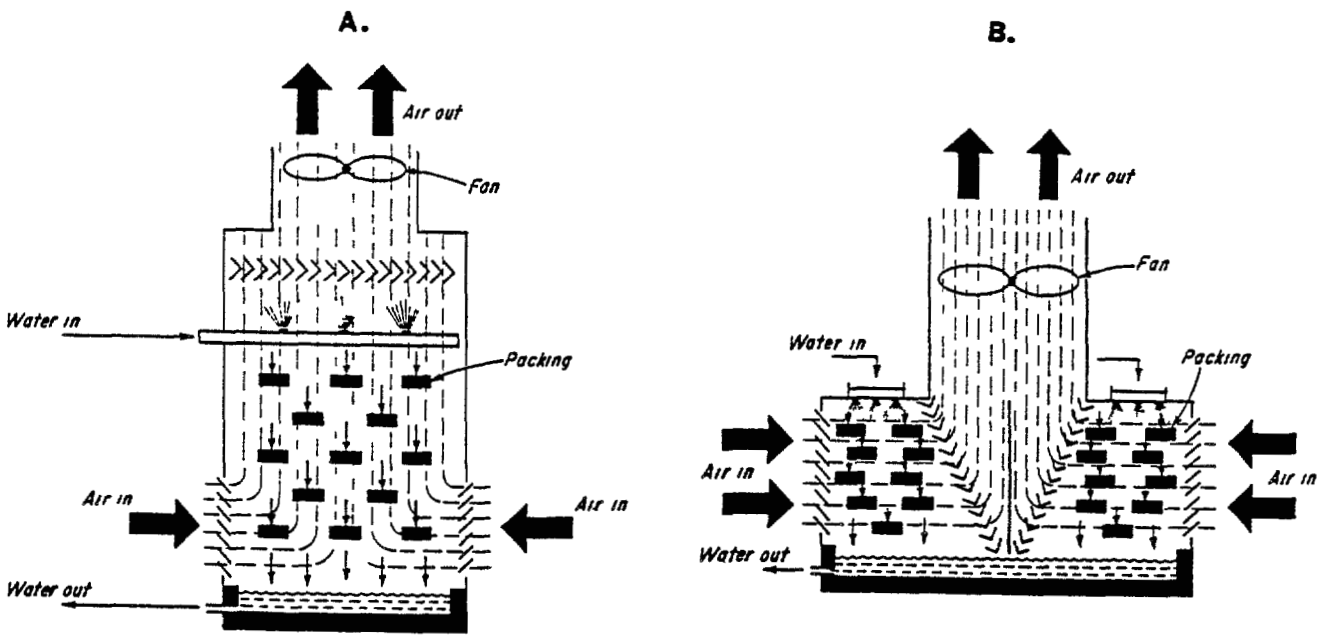

Figure 9-2 (A) Induced-Draft Tower - Counterflow Type
(B) Induced-Draft Tower - Crossflow Type

798

9 2 Cooling Tower Terminology and Theory

Important terms associated with cooling tower theory and operation are given below

Approach - Difference between cold water temperature, and the measured wet-bulb temperature, °F

Blowdown - Water intentionally discharged from the system to control concentration of salts or other impurities in the circulating water

Cell - Smallest tower subdivision which can function as an independent unit with regard to air and water flow, it is bounded by exterior walls or partition walls Each cell may have one or more fans or stacks and one or more distribution systems

Cold water temperature - Temperature of the circulating water leaving the tower, °F

Cooling range - Difference between the hot-water temperature and the Coldwater temperature, °F

Cycles of concentration - Compares dissolved solids in makeup with solids in the circulating water Since chlorides are soluble, for example, cycles of concentration are equal to the ratio of chlorides in the circulating water to chlorides in makeup

Drift - Water lost from the tower as liquid droplets entrained in the exhaust air It is independent of water lost by evaporation Eliminators control this loss in cooling towers

Heat load - Heat removed from the circulating water by the tower It may be calculated from the range and the circulating water flow and is generally expressed in Btu/hr

Hot-water temperature - Circulating water temperature entering the distribution system, °F

Makeup - Water added to the circulating water system to replace water lost from the system by evaporation, drift, blowdown, and leakage

pH - Number between zero and 14 indicating degree of acidity (below 7) or alkalinity (above 7), 7 denotes a solution that is neutral

Pumping head - Minimum pressure required to lift water from basin level to the top of the tower and force it into the water-distribution system Pumping head is equal to static head plus friction loss and pressure drop through the distribution system

Recirculation (recycle) - That portion of the exhaust air which reenters the tower Unit percent of total entering-air quantity which is exhaust air

Relative humidity - Consider a cubic foot of moist air at 70°F containing 0 0004 pounds of moisture Table 1 shows that at 70°F, a cubic foot of air will hold 0 0011 pounds of steam Since there is less, the steam must be superheated, and the table tells how much 70°F- 40°F, or 30°F

Table 1

Temperature °F	Corresponding absolute pressure of saturated steam, inches Hg	Density lb /cu ft
40	0 258	0 0004
50	0 36	0 0006
60	0 52	0 0008
70	0 74	0 0011
80	1 03	0 0016
90	1 42	0 0021

The cubic foot holds less moisture than it could hold Relative humidity is the ratio of the amount of water air holds to the maximum amount of water the air could hold If it holds 0 0004 lbs and it could hold 0 0011 lbs , the ratio is 4 11 or 36 percent This is the relative humidity Notice that it is based on volume, cubic feet of moist air The term percentage humidity expresses the same general idea in terms

800

of moist air The term percentage humidity expresses the same general idea in terms of weight It is the weight of moisture actually mixed with one pound of dry air, compared to the weight of moisture that could be mixed with one pound of dry air at the same temperature

Dew Point - The mixture, with 0 0004 pounds of moisture in a cubic foot, can be cooled Referring to the table again, if it is cooled to 40°F, it will be holding all the moisture a cubic foot can hold at that temperature It has 100 percent relative humidity Such a mixture is called saturated If this mixture is cooled further, some of the moisture will condense The temperature at which this condensation starts, in this case 40°F, is the dew point temperature The dew point of any mixture of air and water vapor depends entirely on how much moisture is present For example, a cubic foot containing 0 0006 pounds of water vapor has a dew point of 50°F

TDS - Total dissolved solids contained in solution in cooling-system water

Water loading - Circulating water flow, expressed in gpm/sq ft of effective horizontal wetted area of the tower, a factor in the unit's ability to meet design cold water temperature

Wet-bulb temperature - Temperature, °F, indicated by a psychrometer Also known as the thermodynamic wet-bulb temperature or the temperature of adiabatic saturation Wet-bulb temperature can be measured with a wet-bulb thermometer which is made by covering the bulb of an ordinary thermometer with wetted silk gauze and placing it in a moving air stream Some of the water in the gauze will evaporate Since vaporization takes heat, it will come from the remaining water and its temperature will drop How much, depends on how dry the air is and its temperature When things settle down, the thermometer reads wet-bulb temperature If the wet-bulb and dry-bulb temperatures are known, the relative humidity of the air can be read from a psychometric chart

9 3 Cooling Tower Heat Transfer Factors

There are four mechanisms of heat transfer from water to air conduction, evaporation, radiation, and advection Conduction or convection is directly proportional to the amount and characteristic of the water-air surface interface and the difference between the water temperature and the ambient-air by bulb Heat transfer by evaporation is proportional to the difference between the water temperature and the ambient-air wet bulb Radiation and advection are negligible in a cooling tower

Quantitative calculations of cooling tower performance by treating mass and heat transfer separately are cumbersome, therefore, simplified approximations are normally used

The rate of heat transfer, by both conduction and evaporation, increases with increases in air-to-water interface surface, relative velocity, contact time, and temperature differential Packing and fill in a cooling tower serve to increase the interface surface, the tower -chimney or fans create the relative air-to-water velocity, contact time is a function of tower size These three factors all may be influenced by the tower design

The fourth factor, temperature differential, is related to ambient wet- and dry-bulb temperatures These are functions of natural conditions and independent of tower design variations of a parameter such as wet-bulb temperature can have a significant effect on cooling tower thermal performance

9 4 Wet-Bulb Temperature Effects

Ambient air wet-bulb temperature may vary in several ways

1 Geographically at a given time For example, summer wet-bulb readings range from 62°F in the west to 81°F in the south

2 Chronologically at a given location A 26-year record from Belleville, Illinois, showed that midsummer wet-bulb readings had a spread of 42°F over that period

802

3 By frequency in different locations and seasons The wet-bulb temperature frequency pattern for a specific site need to be recorded in order to determine the range and duration of wet-bulb readings used to design the cooling tower

The wet-bulb temperature, selected for use in designing a tower can influence its cost appreciably

Wet-bulb temperature also affects tower performance in producing cold water Discharge water temperature goes up with wet-bulb temperature It is characteristic for natural draft towers to have relatively better output at lower wet-bulb temperature and for mechanical draft towers to have better performance at higher, wet-bulb temperatures Relative humidity influences plume buoyancy and chimney effect in the natural draft tower, therefore, performance improves at higher relative humidity This effect is absent in mechanical draft towers

9 5 Design Considerations

9 5 1 Natural Draft Hyperbolic Cooling Towers

A typical power plant cycle which incorporates a natural-draft hyperbolic cooling tower is shown in **Figure 9-3**

About 45 percent of the energy put in ends up being discharged to the condenser cooling water In order to reject large quantities of heat to the atmosphere, cooling towers for a 1,000 MW plant must handle flows of more than 400,000 gpm, with makeup of 12,000 gpm and provide a cooling range of 20 to 27°F

Even though hyperbolic cooling towers are evaporative in design, they contain no fans Flow of air through the shell is created by the density difference between atmospheric air and the air inside the tower This air is warmed by flowing through the hot circulating water

803

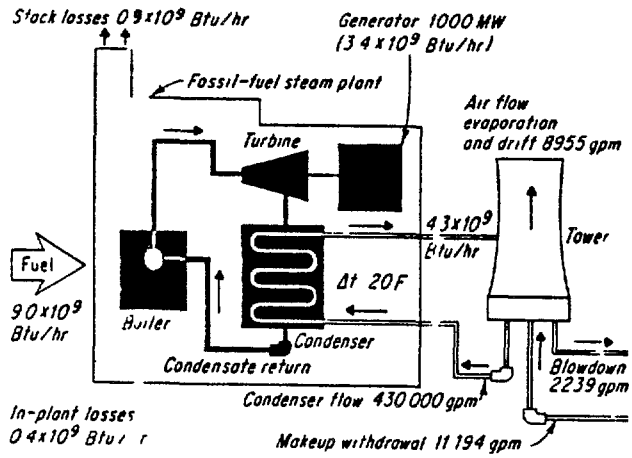

Fossil fuel steam-electric plant using hyperbolic tower has a heat balance as shown for 1000 MW capacity

Figure 9-3 Heat Balance for a 1,000 Mw Fossil Unit

As with the mechanical-draft type, two basic air flow schemes in relation to water flow are cross-flow and counterflow (**Figure 9-4**) The cross-flow cooling tower has fill in a ring outside the tower Although this arrangement may seem to produce a lower water pumping head than the counterflow, fill inside the counterflow tower is spread out over a much larger area, thus, its depth is shallower and vertical water risers are shorter

The air pressure drop through the fill in a cross-flow cooling tower is less than in a counterflow cooling tower, however, leading to less resistance to air flow

The counterflow design provides the more efficient means for heat transfer because the coolest water contacts the coolest air initially, although uniformity of air and water distribution achieved in cross-flow type may offset this advantage In the cross-flow design, air flow is normal to water movement, and usually more fill is required to transfer a given amount of heat, however, the crossflow tower has a lower air-pressure drop Selection of either arrangement depends primarily upon operating conditions required

804

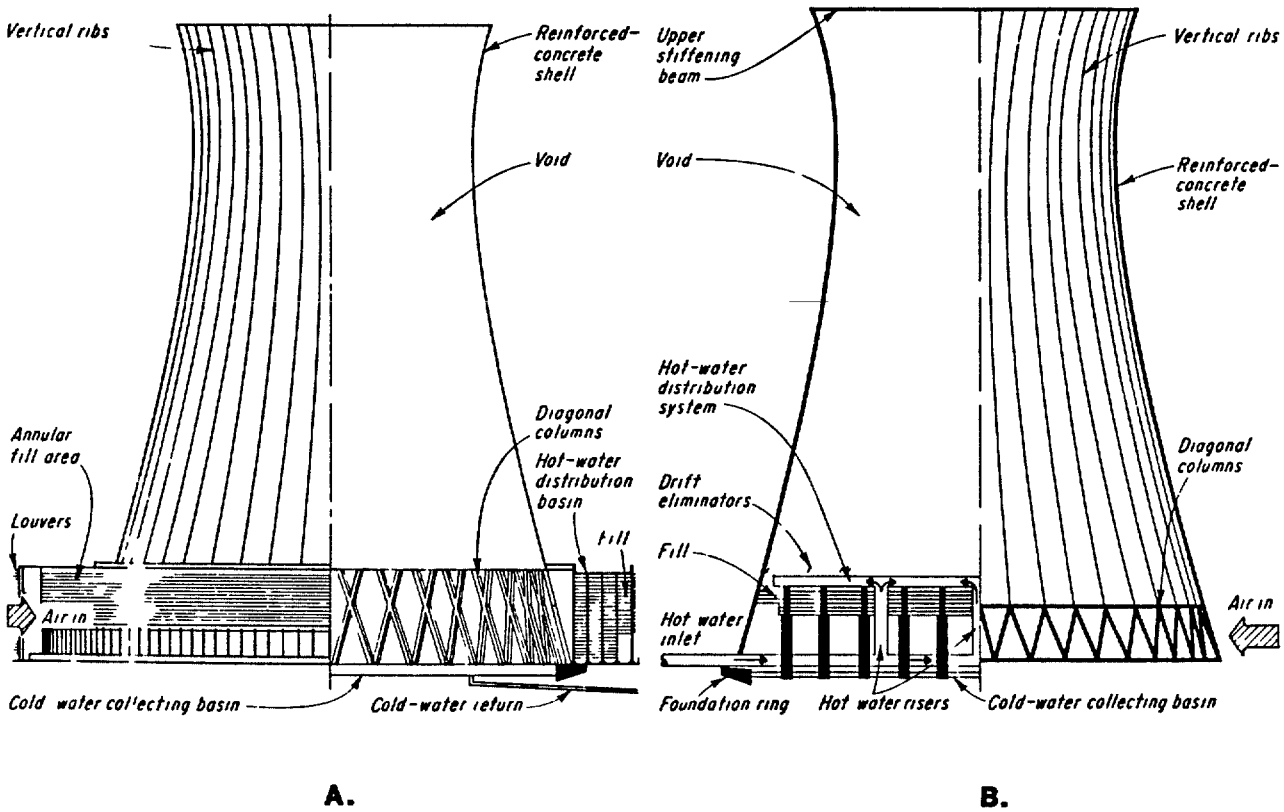

Figure 9-4 (A) Cross-Flow Hyperbolic Cooling Tower
(B) Counterflow Hyperbolic Cooling Tower

805

Heat transfer takes place within the fill area Cross-flow towers have this section outside the shell Typically, the area consists of wood, asbestos-cement, or plastic fill, glass-reinforced polyester grids for supporting the fill, poured or precast support beams and support columns, and asbestos-cement or polyvinyl chloride (PVC) drift-eliminators, placed behind the fill to separate water droplets that may become entrained in the air stream Choice of materials depends largely upon requirements of a specific installation although asbestos cement fill is being phased out

Basic fill arrangements are splash packing and film packing (**Figure 9-5**) The function of both is to generate as much air/water interface as possible with minimum air-pressure loss In the splash type, usually selected for cross-flow towers, hot water falls over wave-shaped fill in such a way that the droplets are constantly reforming, and thus presenting a fresh surface to the cooling air In the film type, used most often in counterflow towers, the sheet-like fill consists of multiple vertical surfaces down which hot water flows in thin continuous films Film-type fill occupies less volume, generally requires less shell height, but is more subject to clogging, splash packing is somewhat easier to repair or replace Splash bar fill has greater maldistribution tolerance than does film packing

A distribution system spreads hot water evenly over the fill A typical system for a cross-flow tower consists of vertical risers and an open water distribution basin (**Figure 9-6A**) Hot circulating water is pumped through risers to the basin, from which water flows through holes in a precast-concrete slab A nozzle is installed in each hole with an integral splash plate that distributes hot water evenly over the fill surfaces

For a counterflow tower, risers feed a closed-pipe -system, cross piping contains nozzles for even distribution of water to the fill (**Figure 9-6B**)

The tower basin collects the cooled water for return to the plant condensers It is sized to hold enough water to permit tower operation for several hours without having to add makeup water A drain system is normally installed for removal of silt deposits This system also acts to control basin water level

806

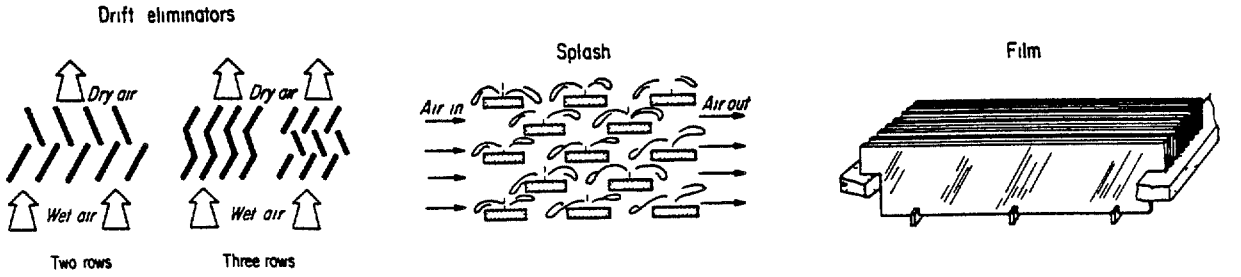

Figure 9-5 Cooling Tower Fill and Drift Eliminators

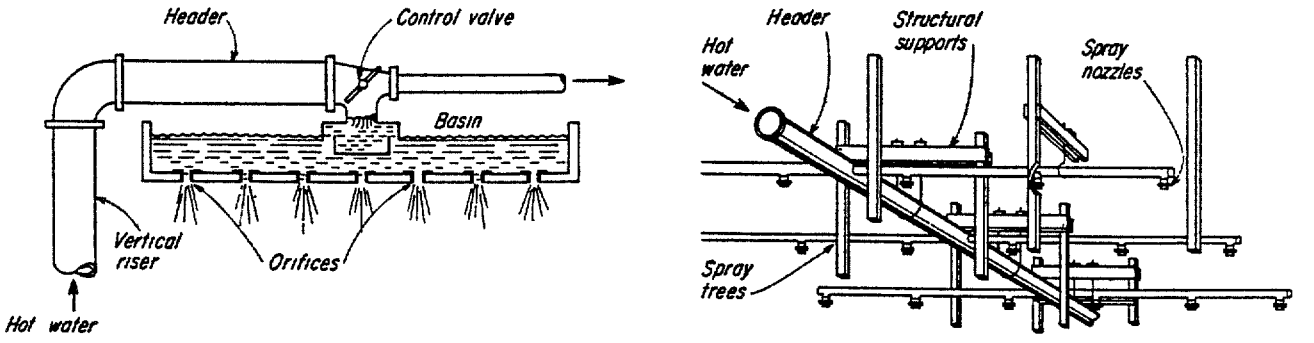

Figure 9-6 Distribution Systems for (A) Cross-Flow and (B) Counterflow Cooling Towers

807

Cold water return is most often a sloped canal at the bottom of the basin which feeds the circulating pumps Screens are placed ahead of the pumps to prevent debris from entering the pumps

A hyperbolic tower is an hourglass-shaped structure sitting on "stilts" in a shallow basin of water The stilts or diagonal support columns provide an open area through which air enters the shell In a counter-flow tower, the fill is located above the columns inside the shell, in a cross-flow tower, the fill is external to the shell and forms an annular ring around the base A canopy seals the ring and the shell

In either type of tower, hot water from plant condensers is pumped to the top of the fill and flows or splashes down through the fill to the basin, while air sweeps up or across the fill area Above the fill, the remaining 300 feet or more of the tower is empty, functioning merely as a chimney

9 5 2 Mechanical Draft Cooling Towers - Crossflow Type

The mechanical induced-draft evaporative cross-flow tower is the most prevalent type of cooling tower It consists of a series of connected cells about 50 feet high, 70 feet wide, and 40 feet deep Each has an individual exhaust fan and stack at the top pulling air through the two louvered sides, horizontally through the fill pack

The sloped, trapezoidal sides follow the falling water profile pulled toward the center by the horizontally flowing air This shape eliminates unusable fill and space, and reduces basin size and cost This shape also facilitates ice melting Warm water is diverted onto the louvers by turning off the fans

The internal support structure may be of redwood, treated fir, concrete, or cast iron Glass reinforced polyester fill hangers are grids with 4 x 4-inches or 4 x 8-inches openings They are suspended from the top of the internal support structure, and the splash bar slats (fill) are inserted into them

After the fill, air flows through drift eliminators which collect water droplets and direct moist air away from the fans Recent designs of drift eliminators have resulted in improvements in drift guarantees from 0 05 percent to 0 002 percent of the circulating water flow

Air inlet louvers on the sloped faces of the tower are mounted on 4-foot vertical centers They contain the water fall and shield it from outside view

9 5 3 Fans and Stacks

Six or eight lightweight high-tensile-strength fiber glass, 28-feet-diameter blades in each fan rotate at top speeds of 12,000 fpm A 200-hp motor with extension shaft drives each fan Pan motors have increased from 25-hp in the 1950's to 200-hp today, with future expectations of 400-hp motors driving 40-feet-diameter fans

Each fan discharges into a premolded fiber glass vent stack that is either 6 feet or 18 feet high Each stack recovers 75 percent of the velocity pressure, thereby, reducing power consumption as the moisture-laden heated air exits at 30 fps 60-foot high stacks are available These elevate the discharge 100 feet above grade

9 5 4 Counterflow-Type

The counterflow mechanical draft tower is seldom used The counterflow-film type theoretically is more efficient thermally than the cross-flow tower, but its higher, air-side pressure drop is an offsetting penalty Generally this tower stands higher because its fill must be located higher within it to allow for air to enter horizontally and flow vertically through the fill This tower has straight sides since no horizontal air flow forces the water fall profile inward

9 5 5 Dry-Type Towers

As unit sizes increase and sources of once-through cooling water supply dwindle, dry-cooling towers increase in popularity A major advantage of using dry-type cooling towers is that they do not add large amounts of waste heat to rivers and lakes, nor do they create fogging or icing conditions Dry towers are less expensive to maintain than evaporative towers, which require chemical additives and periodic cleaning

Use of dry cooling permits siting without regard for large supplies of cooling water Typically, sites would be at a source of abundant fuel for the steam-electric plant or be near the plant's load distribution center This siting flexibility could slash

809

existing stations wishing to expand but without sufficient water to accommodate conventionally cooled units

The main disadvantage of the dry tower is that it is not as thermally efficient as once-through and evaporative cooling Therefore, to do a comparable job, the dry tower is more expensive to build and operate

9 5 6 Key Designs Direct and Indirect

Basic types of dry towers are the direct and indirect (**Figure 9-7(A)** and **Figure 9-7(B)** for nuclear-station cooling The latter type uses a surface or "jet" condenser at the turbine to condense exhaust steam, water from the condenser is Pumped to the dry tower for cooling and recirculation to the condenser In the direct system, steam is condensed in the cooling coils without interfacing with a condenser

Choice of a mechanical-draft or natural-draft tower depends on the economics for the particular plant

In indirect condensing, if a jet condenser is used, cool water from the dry tower is sprayed into the condenser and mixes intimately with exhaust steam from the turbine The mixture falls to the bottom of the condenser and is removed by circulating-water pumps The greater part of this water flows to cooling coils and an amount equal to the exhaust steam from the turbine is directed back to the feedwater circuit through condensate polishers to the steam generator Because of the intimate mixing, circulating water must be of condensate purity

After passing through a water-recovery turbine (an optional component), circulating water is again introduced into the condenser and recycled through the cooling system The recovery turbine is coupled to the drive shaft of the circulating-water pump to recover some of the pressure head between cooling coils and condenser Circulating water does not come into direct contact with cooling air, thus, no evaporative lose occurs as with the wet-type tower To prevent oxygen from leaking into the system, the coils are under pressure

8(10)

need to redraw

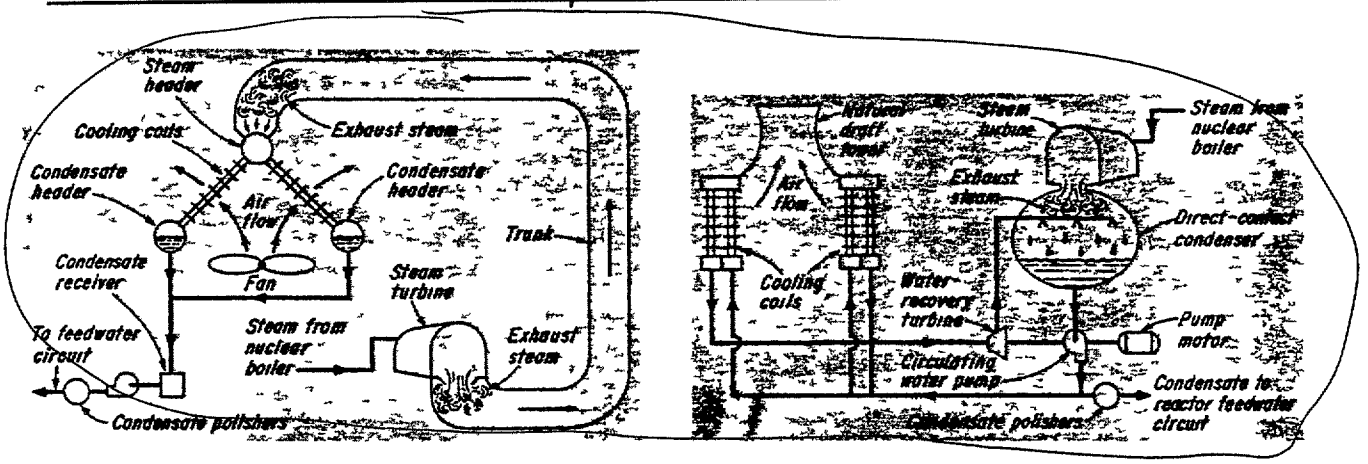

A B

Figure 9-7 (A) Direct and (B) Indirect Type Dry Cooling Towers

In direct condensing, turbine exhaust steam is conveyed through a trunk (as the schematic shows), large in diameter to minimize pressure drops, to the air cooled coils, where cooling air, passing over the finned coil surfaces, condenses the steam Steam enters the top of coil section and condenses as it travels downward, with steam and condensate flowing in the same direction, minimizing pressure loss and increasing the heat-transfer coefficient

In practice, provisions are made for removal of noncondensible gases and air, and for prevention of freezing during cold weather An excessive buildup of noncondensible gases in the main condenser would prevent effective condensation Freeze protection is usually accomplished by warm-air recirculation and/or fan control Condensed steam from cooling coils flows by gravity to condensate receivers and is pumped back to the feedwater circuit by a condensate pump

The principal difference between the two systems is the large volume of exhaust steam that must be handled in the direct system as compared to the smaller volume of circulating water in the indirect system Also, cooling coils in the direct system operate under a high vacuum, perhaps a disadvantage when compared to an indirect system that maintains positive water pressure in the cooling coils Because of requirements for large steam pipes from turbine to condenser, direct systems are limited to small and intermediate-size plants, while indirect systems are expected to be more economical and technically feasible for larger plants

Schematics (**Figure 9-8**) show outlines of a mechanical-draft and a natural-draft by tower and **Figure 9-9** shows fin tubes and their arrangements

311

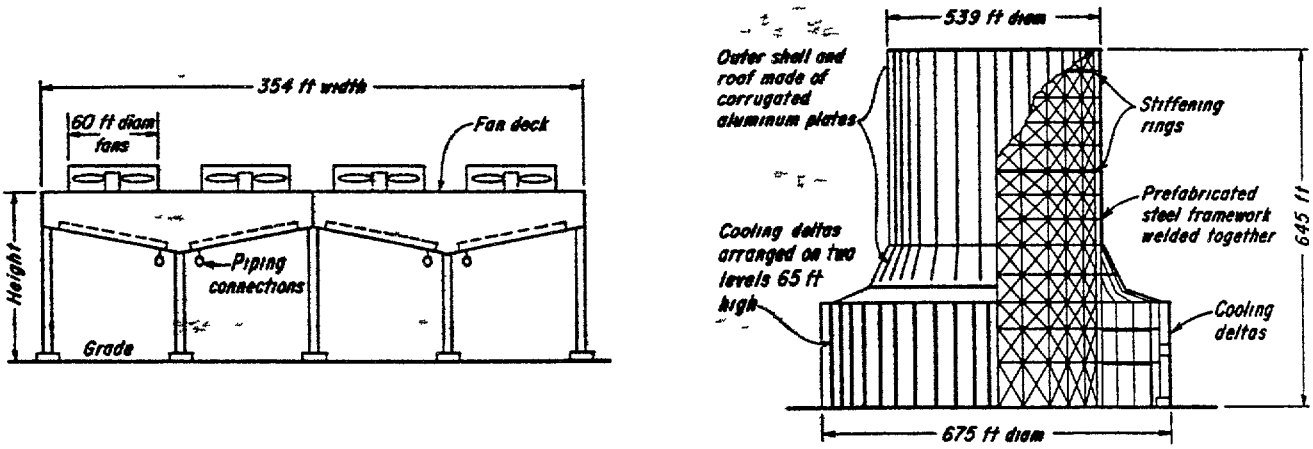

Figure 9-8 Dry-Tower Shells, Mechanical-Draft (Left) and Natural Draft (Right)

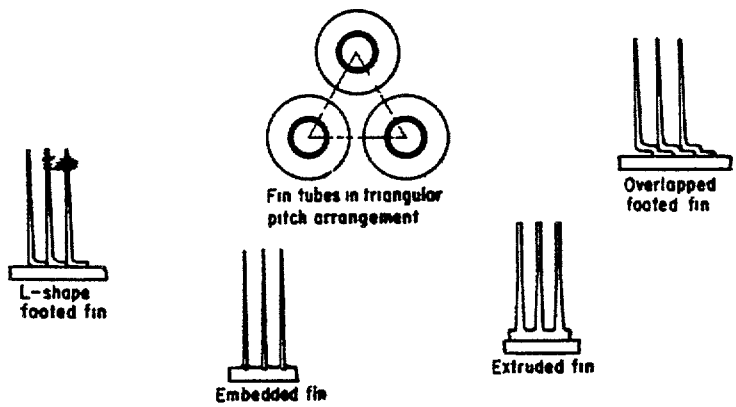

Figure 9-9 Main Fin Tube Types for Dry Tower Heat Exchangers

812

Capital cost of a dry cooling tower is a function of the initial temperature difference (ITD) between the hot fluid entering the cooling coils and cooling air entering the tower If tower size is increased and heat rejection remains the same, IDT is reduced The temperature of the turbine exhaust steam reduced, thus lowering turbine back pressure and boosting plant efficiency Conversely, if tower size is reduced and the heat load remains constant, a greater ITD is needed to dissipate the heat load

9 5 7 Effect on Turbine Back pressure

In the eastern part of the U S , typical design temperatures might be 90°F dry bulb and 76°F wet bulb, equaled or exceeded during only 1 percent of the 2928 hours of June through September of an average year An evaporative tower serving an 800 MW fossil-fuel plant might have these design criteria 24°F cooling range, 18°F approach, 6°F condenser terminal temperature difference (CTTD)

With 76°F wet bulb at a full load, condensing temperature for the wet-tower plant is the sum of the wet-bulb, cooling range, approach and CRTD values or 124°F For the same plant equipped with a dry tower at 60°F ITD (most usual value), condensing temperature for 1 percent of summer hours could be expected to be 150°F (60°F ITD plus 90°F dry-bulb)

The 124°F wet-tower condensing temperature corresponds to 3 8 inches Hg back pressure, as compared to 7 6 inches Hg-for 150°F with the dry tower Thus, for about 29 hr/yr, the wet-tower plant would suffer a 3-MW loss of capability (0 4 percent - not a major factor), while the dry-tower plant would lose 47 MW (5 9 percent) Moreover, a number of specific areas exist in this country where 90°F by bulb is exceeded at the 1 percent level With 50 to 60°F apparently the most economical design ITD range, condensing temperatures will be 145 to 155°F, corresponding to 6 7 to 8 6 inches Hg back pressure, with a loss of rated generating capability of 5 percent to 7 percent During extremely hot weather, back pressures could be as high as 14 inches Hg

It is necessary, therefore, that large turbines capable of operation at high back pressures are made available before optimum-sized dry-cooling towers can be teamed with them The alternative is to have wet-tower cooling at peak loads or oversized dry towers, neither of which is economically attractive **Figure 9-10** shows operating condenser pressures versus ambient air temperatures for various dry-tower sizes

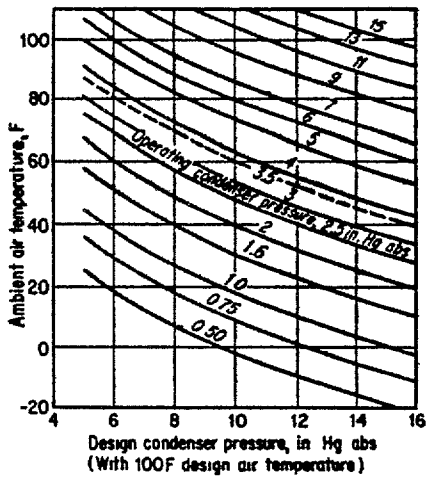

Figure 9-10 Operating Condenser Pressures vs Ambient Air Temperatures for Various Dry-Tower Sizes

Approaches that are taken by (1) eliminate the last row of blades in current designs, (2) design a new line of turbines to operate at high back pressure, or (3) modify a present turbine - for example, strengthen the last-stage blades-so it would be suitable for operation at high back pressures

9 4 8 Wet/Dry Cooling Towers

Combination of evaporative and dry cooling is achieved in the tower shown in **Figure 9-11** Design arrangement enables ambient air to be drawn through both the dry and wet portions in parallel paths, air streams converge and are mixed within a cooling-tower plenum before discharging to atmosphere

Water to be cooled is passed through the dry air-cooled section, then through the wet section of the cooling tower The heated, dry air stream mixes with and dilutes the wet air stream to provide a less visible plume above fan discharge During favorable weather conditions, a visible plume is virtually eliminated, during more adverse conditions, plume density and persistence are substantially reduced

814

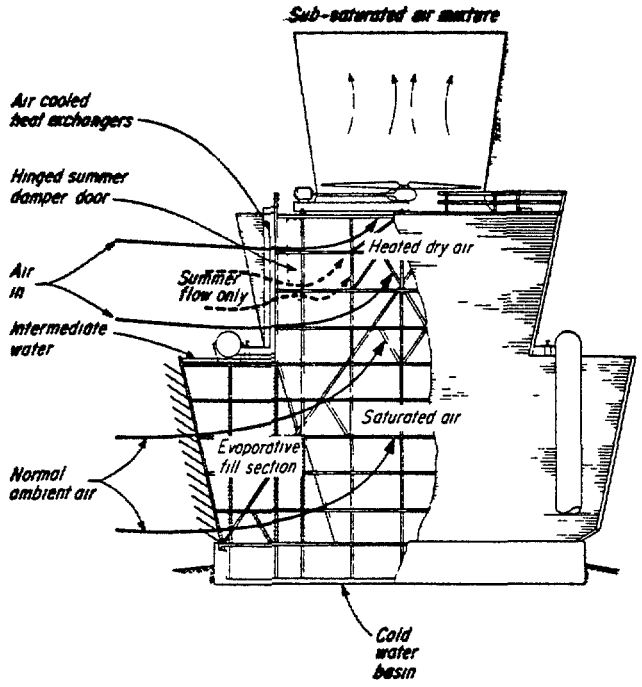

Figure 9-11 Wet/Dry Type Cooling Tower

Besides plume control, another advantage is water conservation For reduced water consumption, the unit will have a larger by than wet section, in contrast to tower above, but will operate similarly For most effective performance, a control device to regulate air flow through the wet section is necessary Evaporation in wet section can be reduced by blocking the wet section air passage

The design feature which permits economic application of the wet/dry tower is the summer damper component, a door-like airflow restrictor, located in the heated dry air stream between the air-cooled heat exchangers and fan The purpose of the damper is to reduce air flow through the dry section, while boosting air flow in the wet section, thereby enhancing wet-section thermal performance in summer Damper doors must not be completely closed, however, or plume-control capability would be lost

Common problems of excess capacity and freezing hazards for winter operation are slashed by using inherently free-draining exchangers and by capitalizing on a lower winter ambient temperature to operate the section for nearly 100 percent cooling Generally, the design ambient temperature is in the range of 20°F to 70°F Positive drainage is assured because air-cooled heat exchangers deliver water directly to the wet section without using a manifold It neatly covers the in-between situation of moderate, but not critical water availability, while also promising plume control

815

9 6 Cooling Tower Test Codes

The purpose of cooling tower test codes is to set up a procedure for determining the thermal capability of water-cooling towers There are currently two test codes available that deal with water-cooling equipment These are CAI Code AT-105, Acceptance Test Code for Water-Cooling Towers, published by the Cooling Tower Institute and P C 23-1986, Power Test Code for Atmospheric Water-Cooling Equipment published by ASME Both codes essentially prescribe the same measurements of water flow, water temperature, wet-bulb and dry-bulb temperature, wind velocity, tower pumping head, fan driver power, and water analysis The ASME Performance Test Code (P C -23) also calls for measurement of entering and exhaust air temperatures, measurement of air flow, and measurement of sound level The frequency of readings required by CAI Code AT-105 and ASME-P C 23 are given in Table 9-2

ASME P C -23 calls for measurement of average exhaust air temperatures from the stack This is not considered practical, especially in the case of natural draft towers which can have a height of 500 feet or more Therefore, all further references in this text will be to the CAI Code AT-105

CRI Code ACT-105 (The Code) is primarily intended for acceptance testing, however, all or part of it may be used for other purposes, such as determination of any of the individual measurements described

The Code specifies that at the time of the test, the tower shall be in good operating condition Its water distribution system should be clear and free of foreign materials which may impede the normal flow of water

All mechanical equipment associated with the tower should be in good working order Fan blades should be at a uniform angle that will yield within ± 10 percent of the specified horsepower loading

816

Table 2

Measurement	Readings per Hour per Station CTI ACT-105	Readings per Hour ASME PTC-23	Units of Measure	Record to the Nearest
Wet-bulb Temperature	12	6	°F	0 1
Dry-bulb Temperature	12	1	°F	0 1
Cold Water Temperature	12	6	°F	0 1
Hot Water Temperature	12	6	°F	0 1
Circulating water Flow	3	3	gpm	1
Tower Pumping Head	1	1	ft	0 1
Fan Drive Power Input	1	1	hp	0 1
Wind Velocity	6	1	mph	1
Makeup Temperature	2	1	°F	0 1
Makeup Flow	2	1	gpm	1
Blowdown Temperature	2	1	°F	0 1
Blowdown Flow	2	1	gpm	1

Drift eliminators should be essentially free of algae and other deposits which may impede normal air flow Fill should be clear of all foreign material including oil, tar, scale, or algae The water level in the cold water basin should be at the normal operating elevation and should be kept substantially constant during the test in order to provide proper air flow to the fill The Code allows-that makeup and/or blowdown streams may be stopped during the test if other test condition requirements are not adversely affected

817

9 6 1 Operating Conditions

The Code specifies that the wind velocity during the test should not exceed the following

- Average wind velocity - 10 miles per hour
- One-minute duration - 15 miles per hour,

Also, the following variations from design conditions should not be exceeded

- Wet-bulb temperature - ±10°F
- Dry-bulb temperature - ±20°F
- Range - ±20 percent
- Circulating water flow - ±10 percent

The total dissolved solids in the circulating water, as determined by evaporation, shall not exceed the greater of the following

- 5,000 ppm
- 1 1 times the design concentration

9 6 2 Constancy of Test Conditions

The Code specifies that for a valid test, variations in test conditions shall be within the following limits

- Circulating water flow shall not vary by more than 5 percent
- Range shall not vary more than 5 percent
- Instantaneous air temperature readings may fluctuate, but variations in the averages during the test period shall not exceed the following

  - Wet-bulb temperature - 2°F per hour
  - Dry-bulb temperature - 5°F per hour

The Code also lays down the duration of the test run as one hour after reaching steady-state conditions If thermal lag time is greater than five minutes, the timed test period shall be at least one hour plus thermal lag time

9 6 3 Thermal Lag

Normally, the interval from the time the cooled water reaches the collecting basin to the time it reaches the CWT measurement station is small, and computation of thermal lag is not required If this time interval, determined by the following equation, is greater than 5 minutes, the test period should be lengthened by a like amount and the test averages shall be based on compensating time spans so that the reading chosen will represent the true tower performance

$$s = \frac{0\ 12 V_b P_w}{(gpm)_t} \qquad (1)$$

where s = Thermal lag time, minutes
V_b = Volume of water in basin during test, ft^3
P_w = Density of water in basin, lbm/ft^3
$(gpm)_t$ = Test water circulation rate, gallons per minute

For proper compensation for thermal lag, the following readings will be averaged over the first part (usually 60 minutes) of the timed period

- Hot water temperature
- Dry-bulb temperature (if required)
- Flow rate and temperature of makeup
- Flow rate and temperature of water flow into basin other than circulating water flow or makeup
- Circulating water flow rate

819

The portions of the following data recorded during the thermal lag time period will not be included in the test averages, test readings will be averaged only over the remainder of the test period

- Flow rate and temperature of water leaving basin other than circulating water flow or blowdown
- Flow rate and temperature of blowdown leaving the basin
- Temperature of main stream of water leaving basin

Thermal lag time less than five minutes may be ignored

9 6 4 Instruments and Measurements

The Code allows water flow measurements to be made by any of the following recently calibrated devices

- Pitot tube (traverse)
- Orifice
- Venturi
- Volumetric or bulk
- Weir
- Flow nozzle
- Turbine meter

The procedure for using any of the above shall be as specified in one of the following

- Instrument manufacturer's specifications
- ASME "Supplements on Instruments and Apparatus," Part 5 Chapter 4 (latest revision)
- ASME Power Test Code on "Hydraulic Prime Movers" (latest revision)

Water temperature measurements may be made by resistance thermometers or mercury-in-glass thermometers and methods prescribed in ASME "Supplements on Instruments and Apparatus "

For inlet air temperature measurement, the Code requires that the wet-bulb temperature be measured for all types of cooling towers while dry-bulb temperature is required to be measured for natural draft and fan-assist cooling towers

For measuring the wet-bulb temperature, the Code specifies that a mechanically aspirated instrument be used which meets the following requirements

- Indicator should be graduated in increments of not more than 0 2°F
- The temperature sensitive element should be accurate to ±0 1°F
- The temperature sensitive element shall be shielded from direct sunlight or from other significant sources of radiant heat The shielding device should be within 2°F of the surrounding dry-bulb temperature
- The temperature sensitive element should be covered with a wick that is continuously fed from a reservoir of distilled water
- The temperature of the distilled water used to wet the wick shall be at approximately the wet-bulb temperature being measured This may be obtained in practice by allowing adequate ventilated wick between the water supply and the temperature sensitive element
- The wick shall fit snugly over the temperature sensitive element and should be kept clean while in use
- The air velocity over the temperature sensitive element shall be maintained between 950 and 1,050 feet per minute

For measuring the inlet wet-bulb temperature, the instruments shall be located within four feet of the air intake The Code specifies the number of measurement stations to measure wet-bulb temperature

The average of three successive readings, taken at ten second intervals at each station, shall be considered the wet-bulb temperature at that time at that station The station averages shall be averaged to obtain the effective wet-bulb temperature for that run Such runs shall be made every 5 minutes during the test period, and the arithmetic average of these runs shall be considered the inlet wet-bulb temperature and shall be used for the evaluation of results

For measuring inlet dry-bulb temperature where required, the Code specifies an instrument whose indicator is graduated in increments of 0 2°F (max) and whose temperature sensitive element is accurate to +0 1° The number and location of stations and the frequency of the readings shall be the same as for the measurement of wet-bulb temperature

For tower pumping head, the Code gives the following formula

Test pumping head

$$PH_t = SP_t + VP_t + D \tag{2}$$

Corrected pumping head

$$PH_c = \frac{L_d^2}{(SP_t + VP_t)(L_t) + D} \tag{3}$$

where PH_t = Test (measured) pumping head, ft

PH_c = Computed pumping head at design fluid flow rate, predicted from test measurements, ft

SP_t = Test static pressure, measured at the centerline of tower inlet, ft

VP_t = Test velocity pressure at centerline of tower inlet, ft

L_d = Water flow rate at design, lb/hr

L_t = Water flow rate at test, lb/hr

D = Vertical distance from basin curb to centerline of tower inlet, ft

822

In addition to the above, the Code specifies measurement of the following quantities

- Wind velocity
- Fan driver power
- Water analysis

The code states that by adhering to the limits of wet-bulb temperature, dry-bulb temperature, cooling range, and circulating water flow imposed in it, results commensurate with the stability of test conditions and accuracy of the instruments can be achieved The effects of wide deviations from design in the following variables may not be adequately described by the equations/graphs used for adjustment of test data

- Water circulation rate
- Water temperatures
- Air flow rate
- Air wet-bulb temperature
- Air dry-bulb temperature

Strong or gusty winds are likely to result-in cooling tower malperformance, as will poor air or water distribution

9 7 Natural Draft Cooling Tower Test Evaluation

9 7 1 Characteristic Curve Method

This part taken from the Code outlines a method for evaluation of the performance of natural-draft cooling towers from test data using characteristic curves The results are expressed in terms of water cooling capability

- Manufacturer's Data - The manufacturer submits performance data as for mechanical-draft towers except that the range of L/G values covered shall be extended to at least $\pm$40% of design L/G

- Determination of Test L/G Value - The test value of L/G for the natural-draft cooling tower cannot be computed directly as for the conventional mechanical-draft type For this type the air flow driving force is the pressure differential from inlet to outlet Due to the difficulty of accurate direct measurement of air flow or measurement of the properties or the inlet and exit air streams, a trial-and-error procedure is used for the determination of test air flow rate The air flow rate is assumed and the corresponding air density difference driving force computed The resistance to air flow is then calculated The trials are repeated until the calculated values of driving force and resistance are equal If computer assistance is not readily available, the procedure may be expedited by graphical means as indicated in **Figure 9-12** The test water/ air ratio $(L/G)_t$ is then computed

- Determination of Test KaV/L Value - Using the test value of L/G and the average test values of hot water temperature, cold water temperature, and wet-bulb temperature, the test value of KaV/L is computed from the Equation (4) using values of hw and ha taken from the Code The use of the integration method given in the Code is recommended CAI Form ATP-127, latest edition, may be used for the computation

$$KaVL = \int_{T_2}^{T_1} \frac{dT}{h_w - h_a} \tag{4}$$

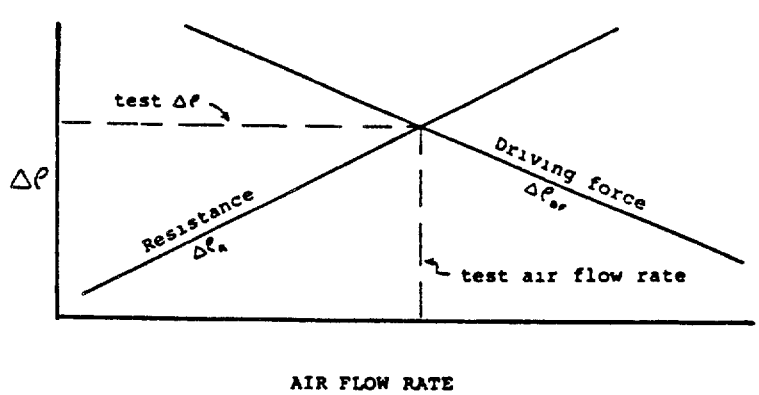

Figure 9-12 Graphical Solution of Test Air Flow Rate

824

- Determination of Tower Capability - The point representing the test values of L/G and KAV/L from the test data is located on the manufacturer's tower characteristic graph Through this test point a curve is drawn parallel to the manufacturer's tower characteristic curves Points on this curve may be calculated by using paragraph V of CAI Form ATP-127 The intersection of the line so drawn with the design approach line determines the value of L/G at which the tower would produce design cold water temperature when operating at design range and design air wet-bulb and dry-bulb temperatures The tower capability in percent of design water flow is the ratio of the L/G so determined to design L/G, multiplied by 100

9 7 2 Performance Curve Method

This part taken from the Code outlines a method for evaluation of the performance of natural-draft cooling towers from test data using performance curves The results are expressed in terms of water cooling capability

- Manufacturer's Data - The manufacturer submits a family of curves which correctly relate the pertinent performance variables

  Performance curves applicable to 90 percent, 100 percent, and 110 percent of the design water flow rate are normally furnished Each set consists of three or more cooling range curves and three or more relative humidity curves, arranged to show the effects of wet-bulb temperature, relative -humidity, and cooling range on outlet water temperature The range curves are presented in uniform increments of °F, with sufficient scope to cover approximately ± 20 percent of design range The relative humidity curves are presented in uniform increments of percent, with sufficient scope to cover approximately ± 40 percent of the design value The design conditions are indicated on the set applicable to design water flow rate

- Determination of Tower Capability - The manufacturer's performance curves are cross plotted at test conditions to determine capability

825

From the test wet-bulb temperature, relative humidity, and cooling range, a cross-plot relating outlet water temperature and predicted circulation rate is prepared From this graph the predicted water circulation rate capability at the test outlet water temperature is determined Performance is then computed from Equation (5)

$$Q = \frac{test\ gpm}{predicted\ gpm \times 100} \tag{5}$$

9 8 Cooling Tower Operation

In operation of cooling towers the control of drift loss is an important factor Undue moisture can have adverse effects on neighboring plant equipment in switchyards and outdoor instruments Drift loss can kill vegetation due to the inhibitors added to the water or by salt water if used for cooling in the system Chromate inhibitors, if used, are extremely toxic and their dispersion needs strict control The industry normal for drift loss is 0 1 percent of gpm flow To maintain this figure, baffle-type eliminators are installed, catching most droplets In some instances, however, even a 0 1 percent drift may be detrimental to the environment To handle this situation, more sophisticated arrangements of baffle shape and size are available that can cut drift loss down to 0 002 percent of circulating water flow, although at same sacrifice in exit air speed

Fire protection of combustible towers is crucial Once a fire has taken hold in an idle, unprotected tower made of wood components (especially the fill), chances are the structure will be totally destroyed because the efficient arrangement of wood fill for cooling water is perfect for almost explosive combustion Fire protection recommendations for large mechanical-draft towers include the following

- Install automatic-deluge fire sprinkler system capable of 0 33 to 0 5 gpm/sq ft density
- Subdivide cells by fire partition walls
- Use non combustible materials
- Prohibit smoking near the tower
- Supervise cutting/welding operations
- Provide fire hydrants nearby

Plumes from cooling towers can form when warm, moist air exhausting from a cooling tower mixes with cooler, ambient air and water vapor condenses and becomes visible These plumes may cause local fogging or icing, or they may just be aesthetically undesirable The wet/dry mechanical-draft cooling tower can reduce or eliminate the visible plume and problems associated with it

The wet/dry tower has a dry heat exchanger in addition to the conventional wet-fill section The amount of water vapor exiting the tower can be controlled by changing the proportion of heat rejected in the wet and by sections Tests on a full size wet/by tower have shown that for the same ambient conditions, increasing the proportion of heat rejected in the dry section results in increasing visibility through the plume and shorter plume length

Combined Cycle
Principles Course
Module 10

Heat Exchangers

FCS
Fossil Consulting Services, Inc.

Columbia, Maryland

828

TABLE OF CONTENTS

Section		Page
10 0	HEAT EXCHANGERS - CONDENSERS AND FEEDWATER HEATERS	1
10 1	Condensers	1
10 1 1	Condenser Theory and Design	1
10 1 2	Description of Condenser and Supporting System	14
10 1 3	Condenser Testing	29
10 1 4	Calculation of Condenser Test Results	33
10 1 5	Determination of Cleanliness Factor	34
10 1 6	Factors Affecting Condenser Performance	36
10 1 7	Low Circulating Water Flow Rate	37
10 1 8	High Air Leakage	38
10 1 9	Fouled Condenser Tubes	39
10 1 10	High Inlet Water Temperature	39
10 1 11	Reduction in Load	39
10 2	Deaerators	40
10 2 1	Deaerator Theory	41
10 2 3	Design Details	43
10 2 4	Deaerator Testing	47
10 2 5	Typical Deaerator Problems	48

10 0 HEAT EXCHANGERS - CONDENSERS AND FEEDWATER HEATERS

10 1 Condensers

Surface condensers are heat exchangers that are essential to the efficient operation of power plants They serve three basic functions in the plant's operation (1) providing a high vacuum environment where the turbine exhaust steam can be condensed, (2) deaerating the condensate, and (3) providing a collection point for the condensate so that it can be returned to the steam generator The condenser is perhaps the most important heat exchanger in the plant, as well as one of the most important components in the plant At the same time it is often one of the most neglected components A good understanding of its construction, the systems that support it, the factors influencing its operation/performance, and the methods of testing it can result in improved unit efficiency

10 1 1 Condenser Theory and Design

It is useful to examine **Figure 10-1**, the temperature surface diagram for a condenser, to understand how it is analyzed and its performance is determined

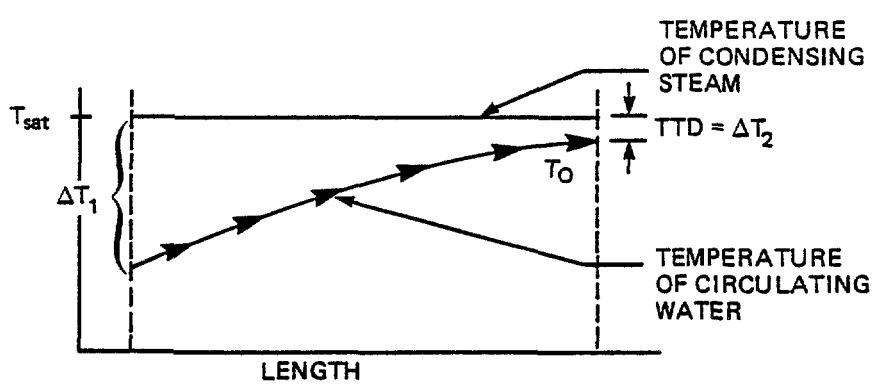

Figure 10-1 Temperature Surface Diagram for a Condenser

830

The condenser is neither a parallel nor counterflow heat exchanger, but rather a cross flow heat exchanger The steam that enters the condenser is saturated, and if the condenser is properly designed, it condenses the steam but does not subcool the condensate Thus the temperature of the hot fluid, the steam and condensate, is constant at the saturation temperature T_{SAT} for the pressure at which the condenser is operating It has been found that the LMTD may be used to describe heat transfer in the condenser

The equation for LMTD in the condenser is

$$\Delta T_{lm} = \frac{\Delta T_1 - \Delta T_2}{\ln\left(\frac{\Delta T_1}{\Delta T_2}\right)} \qquad (1)$$

The temperature differences ΔT_1 and ΔT_2 may be written as follows

$\Delta T_1 = T_{SAT} - T_I$ $\qquad$ $\Delta T_2 = T_{SAT} - T_O$

where T_I = inlet temperature and T_O = outlet temperature

Substituting these values into the equation for LMTD

$$\Delta T_M = \frac{T_O - T_I}{\ln\left(\frac{T_{sat} - T_i}{T_{sat} - T_o}\right)} \qquad (2)$$

A trade organization, the Heat Exchange Institute (HEI), has developed a large amount of empirical data and methods that are used in the design of condensers Some of this information is important for performance monitoring because the design performance is generally used as a benchmark against which to gage actual performance Of particular interest is the method by which, condenser performance curves may be constructed A typical set of curves is shown in **Figure 10-2**

231

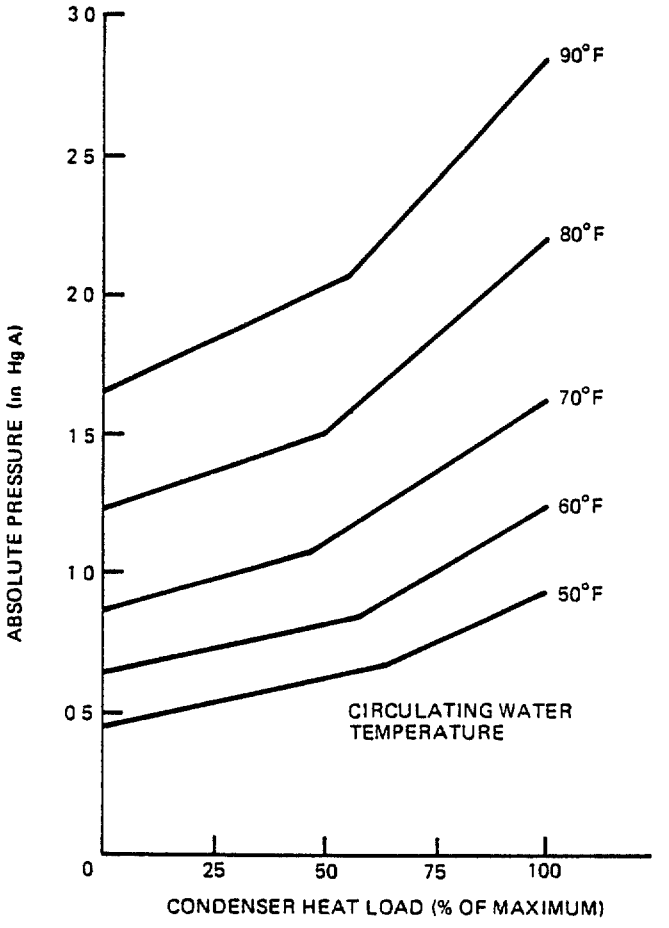

Figure 10-2 Typical Condenser Performance Curves

These curves can be very useful in unit operation because they can be used to establish target values for turbine exhaust pressure, given the unit load and circulating water inlet temperature The following is a method, based on HEI's Standards for Steam Surface Condensers, for calculating these curves

The basic approach to plotting the curves is to determine the condenser pressure by three different methods for each heat load and each circulating water inlet temperature to be plotted, and then to use the highest of the three The first method is to calculate the heat transfer coefficient and use that quantity, along with the LMTD

to find the saturation temperature T_{SAT} The pressure is then determined as the saturation pressure for that temperature

The second method is to use a minimum value of the terminal temperature, difference (TTD) that HEI has given, based on experience, as the best achievable to find T_{SAT} and P_{SAT} That minimum TTD is 5°F

The third and last method is to use an empirical curve developed by HEI that gives the best achievable backpressure based on the air removal capacity of the condenser air removal system This is a concern at low condenser pressures and low circulating water temperatures This 'cutoff' curve (curve A on **Figure 10-3**) shows minimum pressure as a function of circulating water inlet temperature

The pressure at zero heat load cannot be calculated using the method presented It is determined by assuming that T_{SAT} is the circulating water inlet temperature plus the minimum TTD of 5 °F This value is given in the form of a curve for various circulating water inlet temperatures by HEI (see curve B in **Figure 10-3**)

The following is a step-by-step procedure to calculate condenser performance that relies on various tabulated values for frequently used quantities These values are published by HEI Some approximations are also used This procedure requires the following information about the condenser and circulating water

- Total condensing surface area
- Size (outside diameter and gage) and material of condenser tubes
- Circulating water flow through the condenser
- Number of passes in the condenser (usually one or two)

433

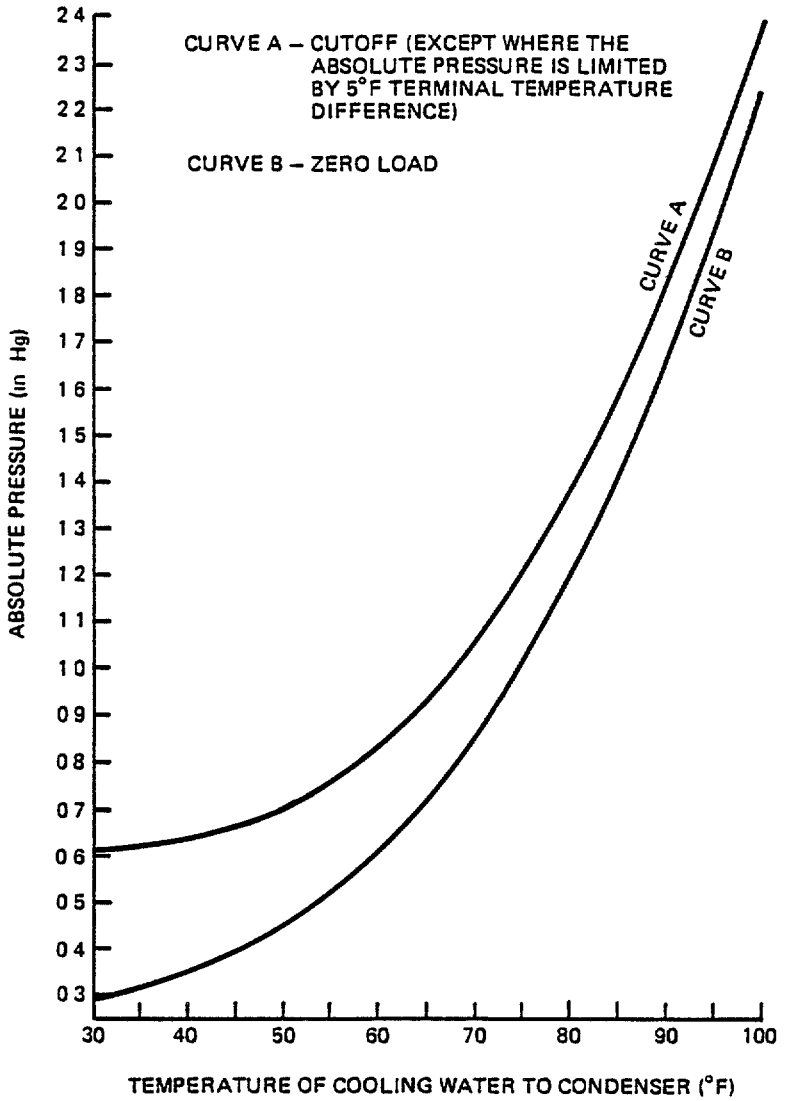

Figure 10-3 Heat Exchange Institute Absolute Pressure Limit Curves for Steam Turbine Service

Step 1 Determine the number of tubes from the following equation

$$N_T = \frac{A}{A \times L} \qquad (3)$$

where

N_T	=	number of tubes
A	=	total condensing surface area, (ft^2)
a	=	area of tube per unit length (ft^2/ft)(from Table 1)
L	=	effective length of tube (ft)

Table 1 Abbreviated Table of Condenser Tube Characteristics

Tube Size O D	Area per Unit Length (ft^2/ft)	Value of Constant C $\ln U = C\sqrt{v}$	GPM per Tube at 1 00 ft/sec Velocity (g) Tube Wall Gage – BWG												
			12	13	14	15	16	17	18	19	20	21	22	23	24
5/8'	0 1636	267	0 406	0 463	0 516	0 566	0 600	0 634	0 680	0 716	0 754	0 770	0 793	0 809	0 826
3/4	0 1964	267	0 693	0 768	0 835	0 899	0 941	0 984	1 041	1 086	1 132	1 152	1 179	1 200	1 220
7/8	0 2291	263	1 057	1 149	1.231	1 308	1 359	1 420	1 478	1 532	1 586	1 610	1 642	1 666	1 691
1	0 2618	263	1 497	1 606	1 703	1 794	1 853	1 913	1 992	2 054	2 117	2 145	2 182	2 209	2 237
1 1/8	0 2945	259	2 014	2 140	2 251	2 356	2.424	2 492	2 582	2 653	2 725	2 756	2 798	2 829	2 861
1 1/4	0 3272	259	2 607	2 751	2 876	2 994	3 071	3 148	3 249	3 328	3 409	3 443	3 490	3 525	3 560

Step 2 Determine the velocity of circulating water through the tubes using the following equation

$$v_T = \frac{G \times N_P}{a \times L} \qquad (4)$$

where

V_T	=	velocity of circulating water through tubes (ft/sec)
G	=	circulating water flow rate (gpm)
Np	=	number of passes in the condenser
NT	=	number of tubes from Step 1
v	=	flow per tube at a circulating water velocity of 1 ft/sec [gpm/(ft/sec)]

Step 3 Determine the ideal heat transfer coefficient from the following

$$U_i = C\sqrt{V_t} \qquad (5)$$

where

U_i	=	ideal heat transfer coefficient (Btu/hr-ft2-oF)
C	=	an empirical constant determined by HEI (from **Figure 10-4**)
V_T	=	velocity of circulating water through tubes from Step 2 (ft/sec)

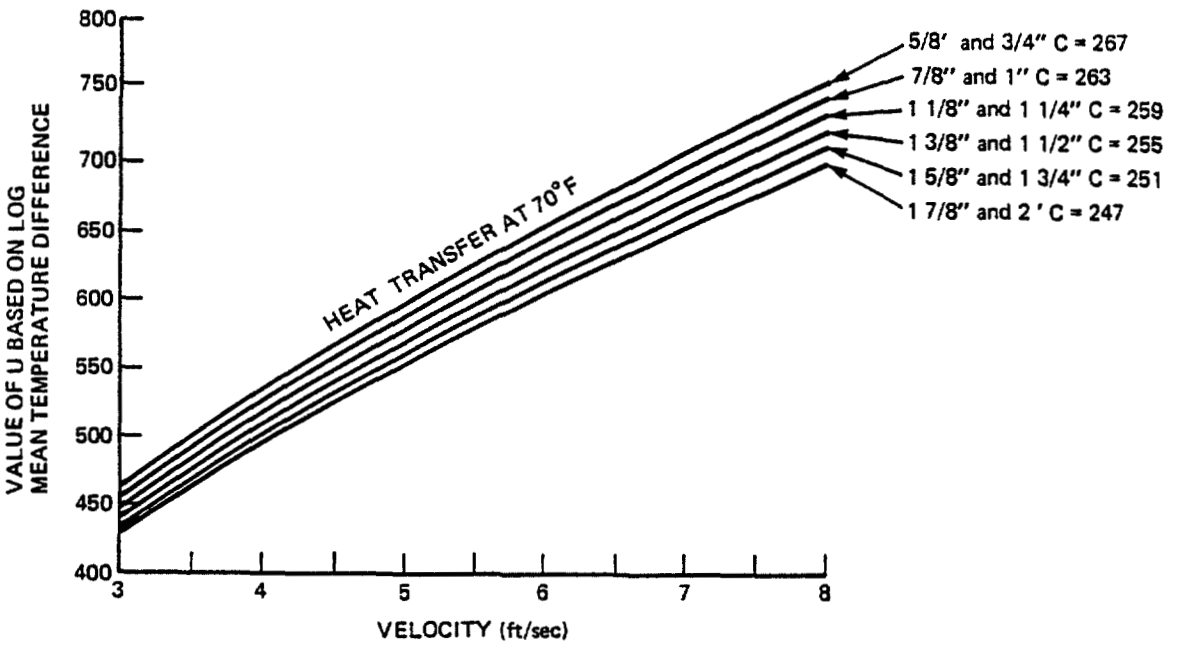

Figure 10-4 Heat Transfer Coefficient versus Velocity

Step 4 Determine the design heat transfer coefficient from the following

$$U_d = U_i \times \frac{C_f}{100} \times C_m \times C_T \qquad \textbf{(6)}$$

where

U_d	=	design heat transfer coefficient (Btu/hr-ft2_0 F)
U_i	=	ideal heat transfer coefficient (Btu/hr-ft 2_o F)
C_f	=	cleanliness factor (%) (usually taken as 85%)
C_m	=	tube material correction factor from Table 2 (dimensionless)
C_T	=	circulating water temperature correction factor from **Figure 10-5** (dimensionless)

Note that the cleanliness factor is really the ratio of the actual heat transferred for actual tube cleanliness to the maximum amount of heat that could be transferred if the tubes were perfectly clean This ratio, expressed as a percentage, is commonly known as the cleanliness factor Because condenser tubes quickly become dirty to a certain degree, even in well maintained condensers, it is common to use a design value of 0 85, for the cleanliness factor

Step 5 Find ΔT_{lm} using the following equation

$$\Delta T_{lm} = \frac{\dot{Q}}{A u_d} \qquad \textbf{(7)}$$

where

A_T	=	log mean temperature difference (°F)
a	=	heat load assumed (Btu/hr)
A	=	total condensing area (ft^2)
U_d	=	design heat transfer coefficient (Btu/hr-ft^2-°F)

251

Table 2 Tube Material Correction Factor

Tube Materials	Tube Wall Gauge – BWG						
	24	22	20	18	16	14	12
Admiralty metal	1 06	1 04	1 02	1 00	0 96	0 92	0 87
Arsenical copper	1 06	1 04	1 02	1 00	0 96	0 92	0 87
Copper iron 194	1 06	1 04	1 02	1 00	0 96	0 92	0 87
Aluminum brass	1 03	1 02	1 00	0 97	0 94	0 90	0 84
Aluminum bronze	1 03	1 02	1 00	0 97	0 94	0 90	0 84
90 10 Cu Ni	0 99	0 97	0 94	0 90	0 85	0 80	0 74
70 30 Cu Ni	0 93	0 90	0 87	0 82	0 77	0 71	0 64
Cold rolled low carbon steel	1 00	0 98	0 95	0 91	0 86	0 80	0 74
Stainless steels Type 304/316	0 83	0 79	0 75	0 69	0 63	0 56	0 49
Titanium	0 85	0 81	0 77	0 71	–	–	–

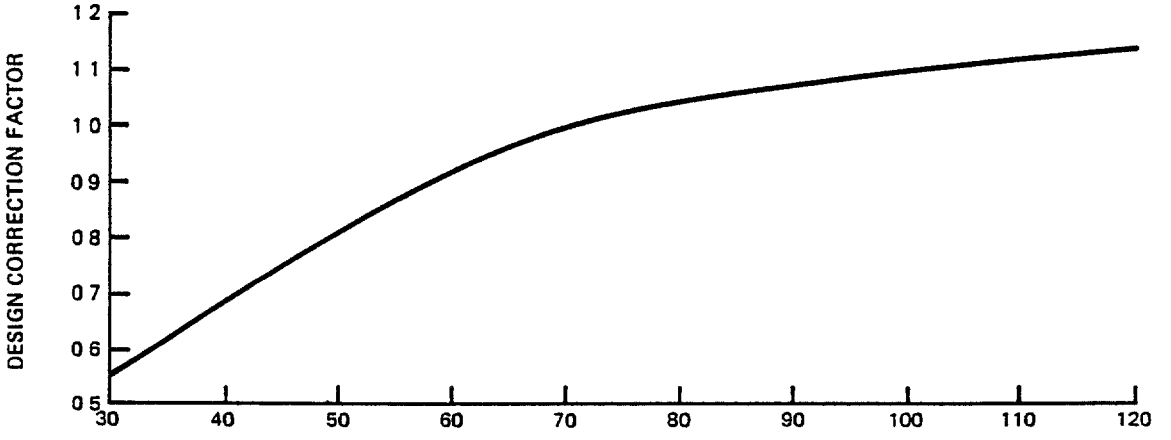

Figure 10-5 Inlet Water Temperature Correction Factor

838

Step 6 Assume a heat load $\dot{Q}$, and determine the circulating water temperature rise as follows

$$\Delta T_R = \frac{\dot{Q}}{G \times 60/7\ 481) \times \rho \times c_p} \qquad \textbf{(8)}$$

where

ΔT_R	=	temperature rise (°F)
Q	=	heat load (Btu/hr)
G	=	circulating water flow (gpm)
60	=	a constant (60 min/hr)
7 481	=	a constant (7 481 gal/ft^3)
ρ	=	density of water (from **Figure 10-6**) (lb/ft^3)
c_P	=	specific heat capacity of water (from **Figure 10-7**) (Btu/lb -°F)

Step 7 Solve for saturation temperature T_{SAT} This is best done by defining a working intermediate value x as follows

$$X = \frac{\Delta T_R}{\Delta T_{lm}} \qquad \textbf{(9)}$$

$$T_{satA} = T_I + \frac{\Delta T_R e^x}{e^x - 1} \qquad \textbf{(10)}$$

where

x	=	working intermediate value (dimensionless)
ΔT_R	=	temperature rise from Step 6 (°F)
ΔT_{lm}	=	log mean temperature difference from Step 5 (°F)
$T_{sat\ A}$	=	saturation temperature from ΔTlm (°F)
T_I	=	circulating water inlet temperature (°F)

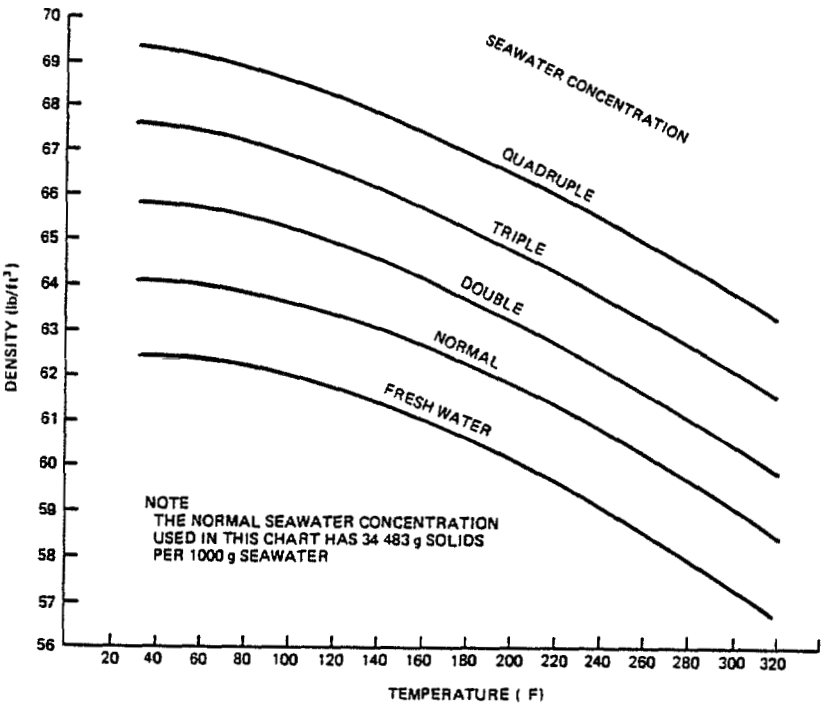

Figure 10-6 Density of Seawater

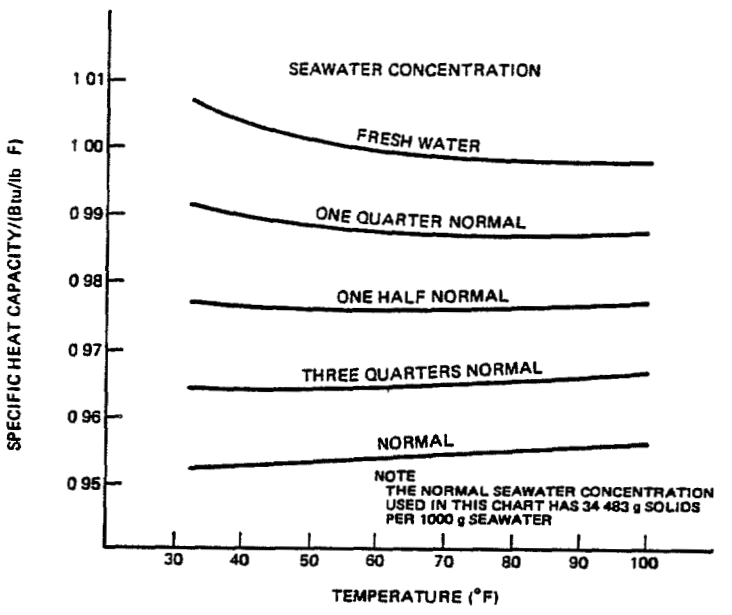

Figure 10-7 specific Heat Capacity of Seawater

340

Step 8 Determine saturation pressure $P_{sat\ A}$ from $T_{sat\ A}$

Step 9 Determine saturation temperature $T_{sat\ B}$ based on minimum TTD, as follows

$$T_{sat\ B} = T_I + \Delta T_R + 5°F$$

where

T_I	=	circulating water inlet temperature (°F)
ΔT_R	=	temperature rise from Step 6 (°F)
5 °F	=	a constant, the minimum TTD allowed by HEI (°F)

Step 10 Determine saturation pressure $P_{sat\ B}$ from $T_{sat\ B}$

Step 11 Determine "cutoff" saturation pressure $P_{sat\ C}$ from HEI curve A (Figure 10-3)

Step 12 The condenser pressure is the highest of the three, $P_{sat\ A}$, $P_{sat\ B}$ and $P_{sat\ C}$

Note that condenser performance curves determined by the method described above are based on a conservative design philosophy A new condenser, with perfectly clean tubes, that has just been placed into service may very well perform better than design Also, the curves are plotted as a function of heat load, which is not readily determined in normal operation Usually, the heat load is estimated as a function of generator load by using design heat balance data

A number of factors influence condenser performance The three factors most often of concern in operation are the circulating water flow, the cleanliness factor, and air blanketing Consider the first two factors

- Circulating water flow can be changed considerably in most plants by varying the number of circulating water pumps in service Most plants have two circulating water pumps, if only one is in operation, the circulating water flow is generally about 60% of that for two-pump operation

- The cleanliness of the condenser generally deteriorates over time Even-a condenser with a continuous tube-cleaning system will probably have an average cleanliness factor of only about 85%

Figure 10-8 shows the effect of the first two factors on condenser performance The third factor, air blanketing, also has great influence on condenser performance If air accumulates in the condenser, heat transfer may be reduced dramatically Air blanketing generally has two causes, vacuum leaks and air removal equipment problems

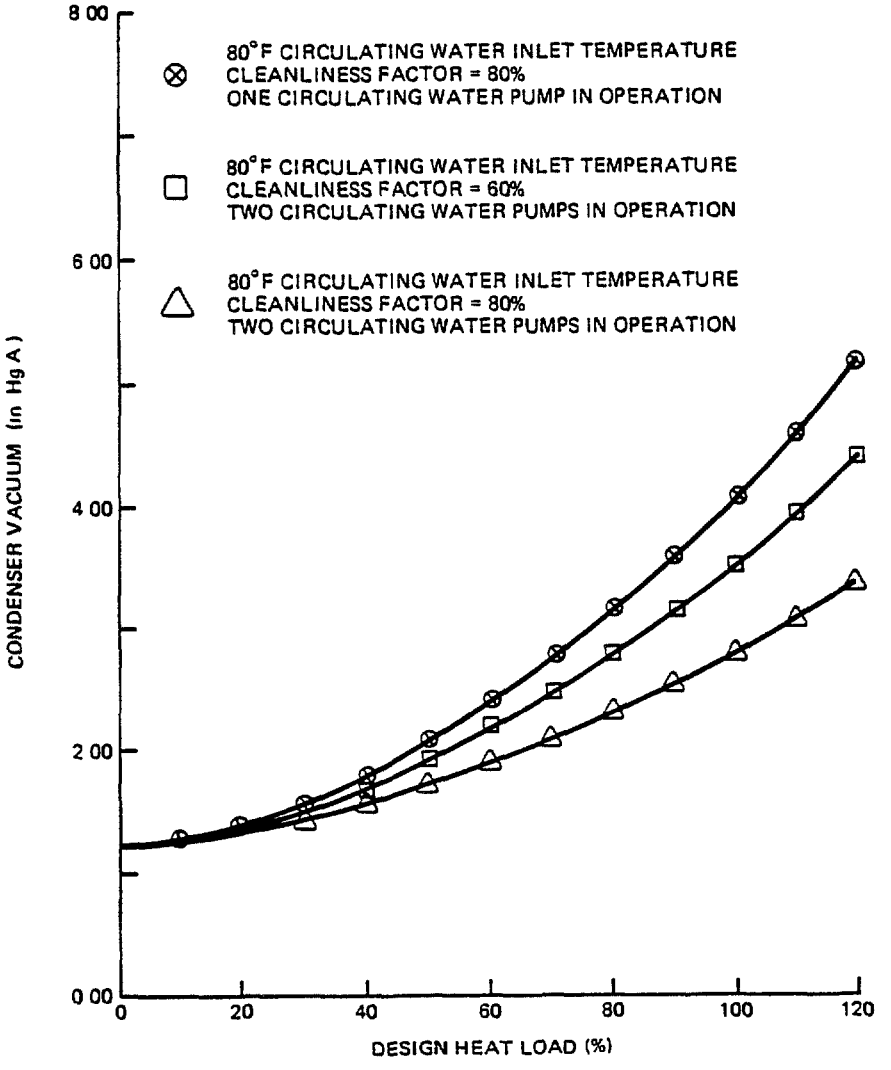

Figure 10-8 Variations of Condenser Performance with Different Cleanliness Factors and Circulating Water Flow

842

- Vacuum leaks are a common problem Correcting them usually requires a thorough search of most likely leak locations using a helium leak detection technique Helium is released at the suspected leak location and checked for at the discharge of the air removal pumps or ejectors

- Problems with the air removal equipment can also be a problem It is often possible to distinguish between leakage and equipment problems by checking the quantity of air removed If a clean condenser with adequate supply of circulating water has a high pressure with low air flow from the vacuum pumps or ejectors, they should be checked

10 1 2 Description of Condenser and Supporting System

Condensers in modern power plants are generally rather similar, they usually take the form of a large metal tank beneath the turbine There are, however, a number of possible differences in the arrangement of the condenser

Although in most plants, the condenser is located directly beneath the low pressure turbine(s), there are several variations in the shape, arrangement, flow paths, and flow directions These variations are dictated by cost, space limitations, cooling water quality and availability, efficiency, and other plant-specific considerations Almost all surf ace condensers are custom designed for each plant to optimize installation and operating costs for that plant's particular operating conditions

Variations in type include round, oval, and rectangular shaped condensing space, single pass or double pass, circulating water flow through the tubes either parallel to or perpendicular to the turbine shaft, and uniform or multipressure condensing Each of these features has advantages in initial cost, ease of erection, space requirements, or efficiency

Most modern plants have rectangular, welded-steel, shell condensers Where the supply of cooling water is plentiful, the condenser is generally single pass and uniform condensing, with the tubes perpendicular to the turbine-shaft Where the supply of water is limited and cooling towers are used, condenser characteristics may include double pass circulating water flow, multipressure condensing, and tubes parallel to the turbine shaft **Figure 10-9** shows a typical rectangular shell, single-pass, uniform condensing, perpendicular tube condenser

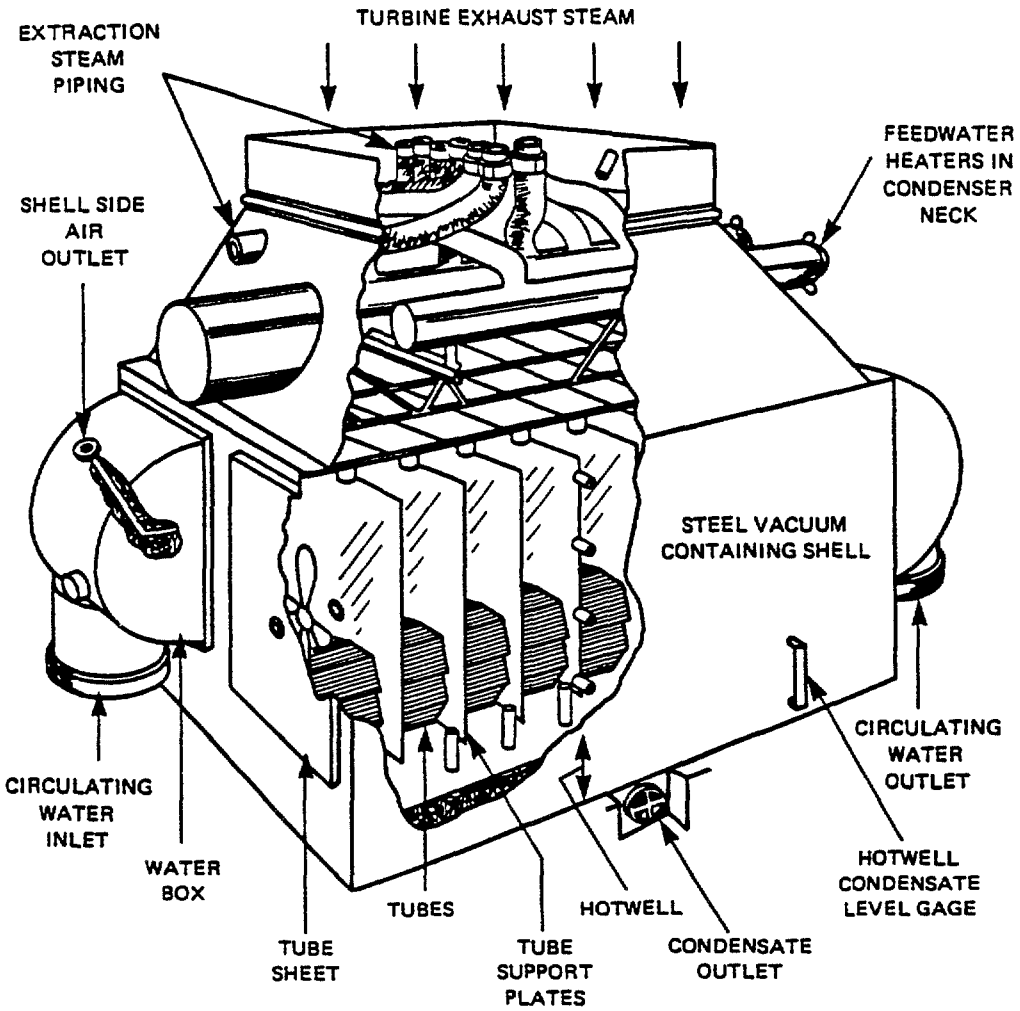

Figure 10-9 Typical Condenser (cutaway)

The normal range of operating temperatures for the condenser shells is from ambient to approximately 120°F Because of its large size and the fact that it may see temperatures as high as 212°F in a loss-of-vacuum situation, it must have provisions for a substantial amount of thermal expansion in its support system **Figure 10-10** illustrates the two common methods of support In **Figure 10-10(a)**, the ring-mounted condenser is supported primarily by foundation springs However, some support is also provided by its connection to the turbine shell Thermal expansion of the condenser shell is downward in this arrangement and is accommodated in the support springs

In **Figure 10-10(b)** the condenser shell rests solidly, on its foundation and is connected to the turbine shell by a rubber or metallic expansion joint Thermal expansion is upward and is accommodated in the expansion joint It is important to know which type of support system is used for the condenser, because the expansion joint is-often a source of vacuum leaks

Baffle plates are installed in the condenser to evenly distribute the steam exiting the turbine Without these plates, the uppermost tubes would receive most of the steam with very little reaching the lower tubes, which would result in less than optimum cooling water utilization

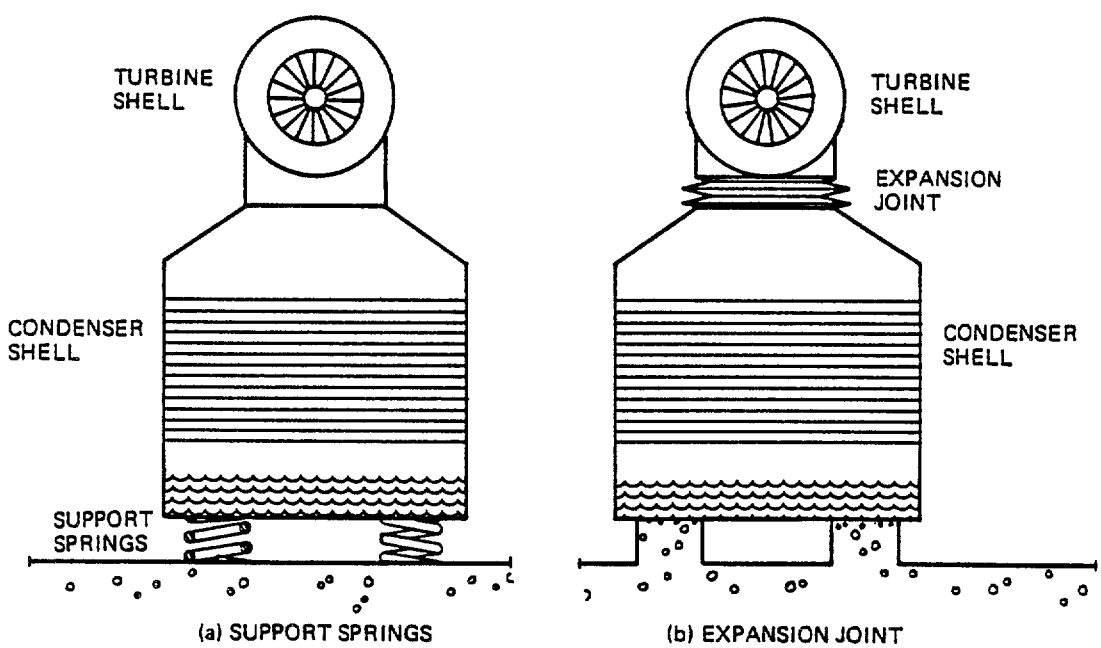

Figure 10-10 Condenser Shell Supports

845

To optimize space utilization and minimize piping costs, most modern plant designs have the low pressure feedwater heaters physically located in the neck of the condenser as shown in Figure **10-10** The relatively large extraction steam lines from the low pressure turbine can therefore have the minimum run distance, and the drains can flow directly to the condenser with minimal piping

Steam enters the condenser from the turbine-generator low pressure exhaust At this point the steam has a rather high velocity While it is desirable for the steam to have a certain amount of velocity so that some of the steam will penetrate to the center of the tube bundle (for more even heat transfer), the moisture in the steam can erode the surface of the condenser tubes, eventually causing tube leaks, if it is allowed to directly strike them Therefore, baffle plates are placed at the top of the condenser in some designs to prevent the steam flow from impinging on the tubes and to redirect the steam flow for more even heat transfer throughout the tube bundle

High velocity steam in the condenser is also desirable to strip off any insulating air blankets that may form on the tube surfaces As steam condenses in the condenser, noncondensable gases trapped in the steam will come out of solution and accumulate Air can also leak into the condenser through turbine glands or other openings to atmosphere

If these gases are allowed to accumulate in the condenser, the natural vacuum formed when steam collapses (condenses) into water would be lost, and the steam cycle would lose much of its efficiency If these gases (primarily oxygen and carbon dioxide) are allowed to remain in the condenser, the condensate in the hotwell will absorb them, which can lead to corrosion in the condensate, feedwater, and boiler systems Air ejection and removal systems are installed to remove these noncondensable gases

Air is removed from the condenser through air collection headers These headers take suction in a section of the tube bundle that is physically separated from the rest of the tubes by baffle plates These sections are called the air coolers The air coolers reduce the volume of the noncondensable gases and condense as much steam as possible The air is then pumped out by air ejectors or vacuum pumps, or a combination of the two **Figure 10-11** shows the arrangement of typical air cooler sections

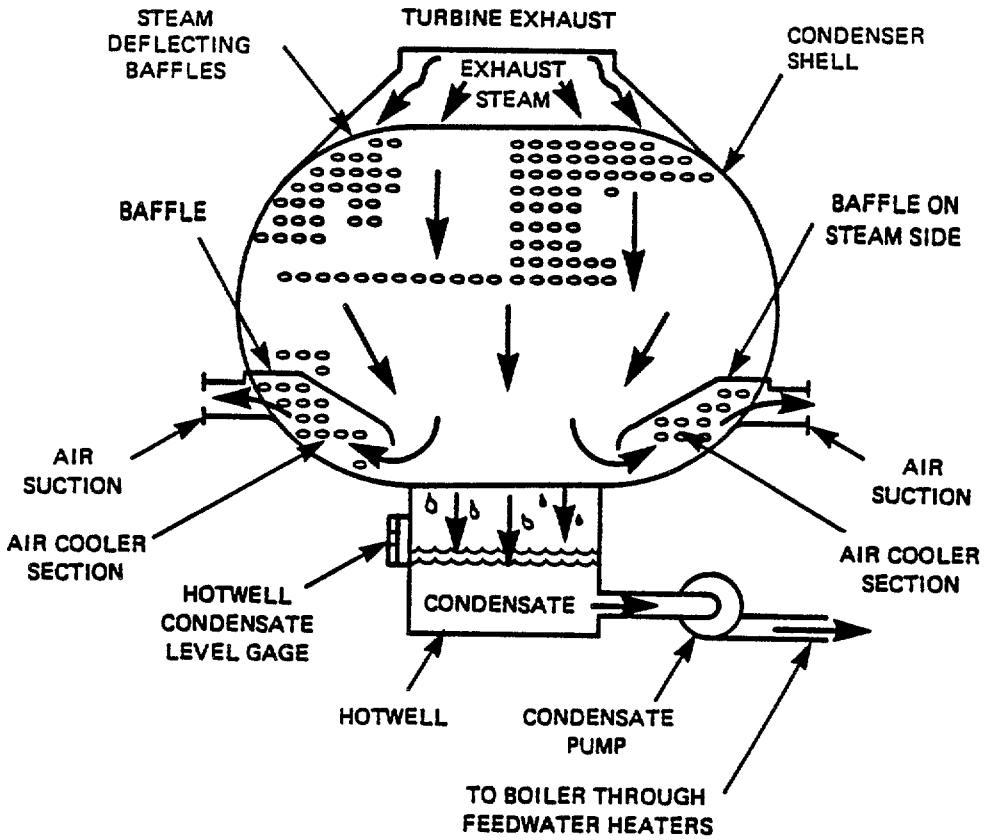

Figure 10-11 Cross-Sectional View of a Simple Condenser

As water condenses on the tube surfaces, it will drip off and fall to the bottom of the condenser Some condensers have trays mounted below the tubes that catch the condensate drops before they reach the hotwell Condensate collected in the trays drips to trays located below them Incoming steam is directed up through the trays As the drops fall, noncondensable gases in the water are released and carried away with the steam so that they can be removed through the air coolers These trays are called deaerating trays, and the principle of operation is similar to that used in many condensate Deaerators

Many different penetrations in the condenser shell accommodate the various systems that interface with the condenser Condensate suction, recirculation, and vent

847

lines, heater drip return lines, condensate polisher suction and discharge lines, temperature and pressure probes, and condensate makeup piping are just a few examples of penetrations made in the condenser shell Wherever there is a penetration, the possibility of an air leak exists Therefore, pipe connections are welded where possible

When lines that carry water to the condenser are installed (such as condensate makeup), they usually discharge through a spray pipe installed above the tube bundle Thus, when makeup condensate is introduced to the condenser, it can perform some cooling and condensation of steam, and will be warmed to the same temperature as the hotwell contents when it reaches the hotwell This process also performs deration in the condenser

Water eventually reaches the bottom of the condenser shell, where it is collected This section of the condenser is called the hotwell

Condenser Tubes

The most important element in the condenser is the tubes The tubes carry the cooling circulating water on the inside, and the outside provides the heat transfer surface on which the steam is condensed The capacity of a condenser is based largely on the heat transfer surface available The greatest heat transfer surface would be provided by millions of very tiny tubes However, since tubes must have a fairly substantial wall thickness because of the differential pressure across them, and to minimize resistance to circulating water flow, larger tubes are used

Many different materials have been used for condenser tabes aluminum, admiralty brass (71% copper, 28% zinc, and 1% percent tin), Muntz metal, arsenical copper, aluminum brass, aluminum bronze, 90-10 copper nickel, 70-30 copper nickel, stainless steel, and titanium The heat transfer coefficient for conductance and the initial cost are lowest for aluminum and increase through this list to titanium, which has the highest heat transfer coefficient and initial cost Aluminum may seem to be the best material from the standpoint of initial cost, but actual costs are governed by such other factors as resistance to corrosion and erosion on both the steam and circulating water sides, costs of installation, and the actual effective heat transfer rate

This last factor is especially meaningful when one considers that the tube wall resistance to heat transfer may account for only 2% of the total Steam side and water side fouling and film resistance may account for the remaining 98% of the total resistance Therefore, materials that tend to resist this fouling and reduce the film resistance tend to have a much better overall heat transfer coefficient

Resistance to corrosion and erosion is also important because highly resistant materials will not require frequent replacement Therefore, material, installation, and operating downtime costs are saved As a result of these considerations, many modern condensers are being built or older condensers retubed with stainless steel or titanium tubes

In the past few years, there have been developments in the area of condenser tabes, most notably the introduction of corrugated tubes such as that shown in **Figure 10-12**

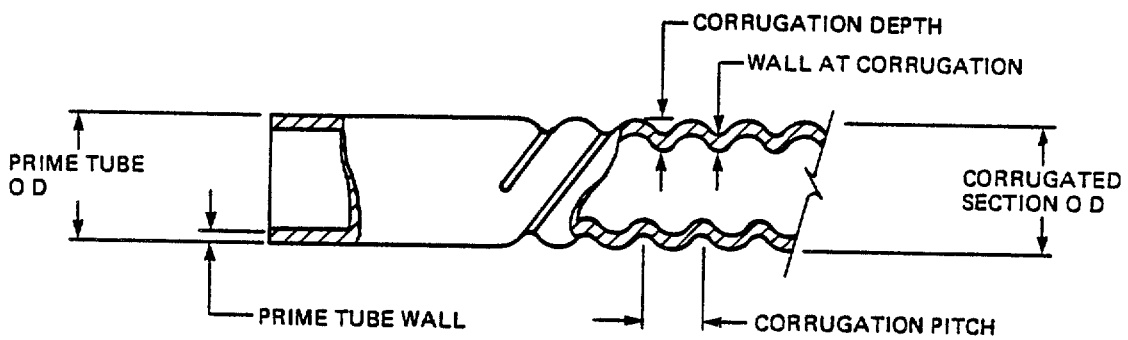

Figure 10-12 Corrugated Surface Tube

These tubes can have a higher heat transfer coefficient than conventional smooth tubes because the irregular surface reduces the film heat transfer coefficient on both the inside and outside of the tube

The arrangement of the tubes within the condenser depends largely on the design philosophy of the vendor In the main section, the tubes are usually evenly spaced and arranged so that steam is evenly distributed to all tubes along the entire length of the

849

tubes Tubes in the air cooler sections may be more closely spaced to allow for condensing as much steam as possible

Tube sheets that are exposed to both the steam and circulating water are made of noncorrosive materials Internal tube supports are usually carbon steel, and are spaced to limit tube vibration caused by high steam flows

Condenser Hotwell

The condenser hotwell is a collection point f or the condensed steam From here the condensed steam is recirculated through the steam cycle it also serves as a reservoir to accommodate fluctuations in cycle demand while maintaining an adequate suction supply for the condensate pumps The size of the hotwell is often determined by specifying that it must be able to provide full load condensate flow for a set period of time (with no steam flow), usually about two minutes Finally, the hotwell serves as a collection sump for system drains to prevent unnecessary loss of clean condensate

The temperature of the condensate is normally at the saturation temperature corresponding to the pressure (vacuum) in the condenser Under normal conditions this temperature is below 100°F Under certain conditions, it is possible to subcool the condensate below the saturation temperature, which is undesirable because more heat must be added by the feedwater heaters and HRSG, and the steam cycle becomes less efficient

The level in the condenser hotwell is maintained by a level control system The level must be maintained below the lowest tubes in the tube bundle to avoid losing the heat transfer of these tubes Also, deaeration of the condenser is inhibited if the condensate covers the derating trays A gauge glass is usually provided so that the level in the hotwell can be verified locally

In some hotwells, a trough is provided under each tube bundle at the tube sheet A small part of the condensate from this trough is continuously sampled to detect condenser leaks and to identify the leaking side of the condenser

The condensate pumps take suction on the hotwell Some hotwells have coarse strainers in the outlet lines to prevent condenser debris from being sucked into the

condensate pumps Anti swirl devices that ensure smooth flow to the condensate pumps are also often included Because of its close relation with the condensate system, the hotwell is often considered part of that system

Condenser Air Removal Equipment

Air is removed from condensers using air ejectors, vacuum pumps, or systems that employ both methods Removal of air during plant startup is usually referred to as hogging, therefore, equipment that provides condenser evacuation during startup is often called a hogging pump or air ejector

Air ejectors are a type of jet pump A high pressure gas, air or mote commonly steam, is forced through a nozzle, increasing its speed and decreasing its pressure (venturi effect) A low pressure area is created at the exit of the nozzle This low pressure area is connected to the air removal headers of the condenser **Figure 10-13** shows a simplified diagram of an air ejector

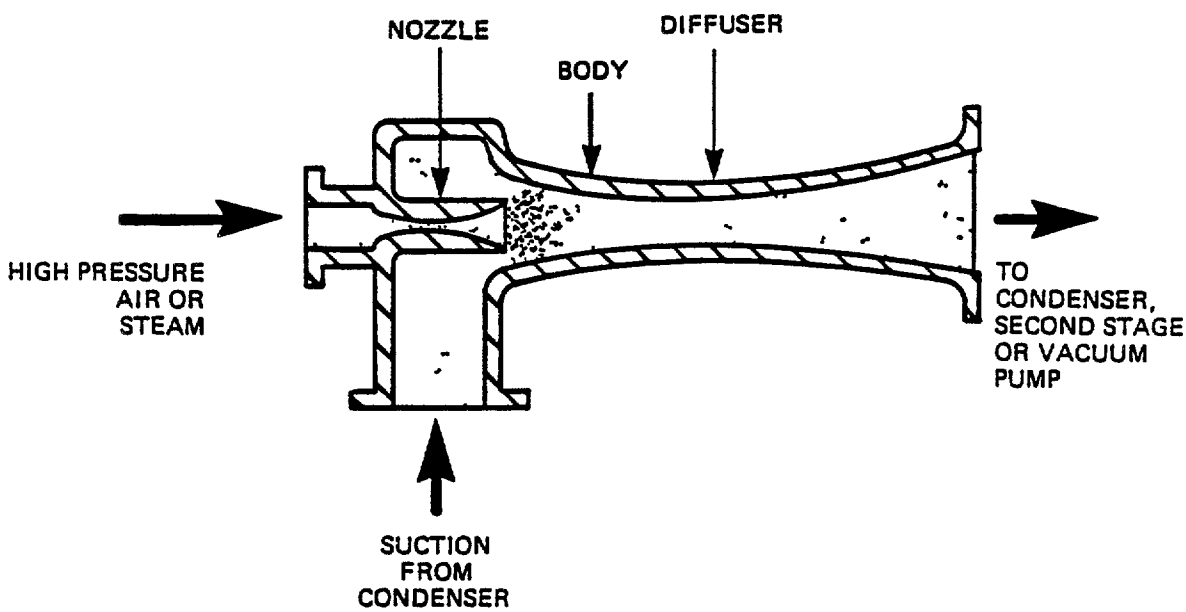

Figure 10-13 Cross-Sectional View of an Air Ejector

If one air ejector cannot create sufficient vacuum alone, two ejectors are placed in series The second ejector takes suction on the discharge of the first If steam is used, it is condensed in an air ejector condenser If two stages of steam-powered air ejection are used, the second stage takes suction on the first-stage condenser

851

Air removal vacuum pumps are usually rotary, positive displacement pumps that take suction on the air removal header in the condenser The vacuum pumps are essentially air compressors that compress air at very low pressure (condenser vacuum) to atmospheric The pumps must be sealed with water to prevent air from being sucked in through casing penetrations Seal water is supplied by a seal water pump, which may operate off the main motor or pump shaft or have a separate motor that starts when the vacuum pump is started

As in any air compressor, heat is generated as the air is compressed In some systems, a heat exchanger cools the seal water and removes this heat The air discharged from the vacuum pump enters a receiver or separator, where any water vapor contained in the air is condensed This separator also serves as a reservoir for seal water A supply of condensate is usually provided to the separator for makeup purposes Air, with the water vapor removed, is then exhausted to atmosphere through an internal or external silencer

A flowmeter is normally located at the discharge of the separator to monitor the amount of air being removed from the condenser During normal operation, this should be a fairly small amount If greater than normal air flow is indicated, an air leak exists in the condenser, and steps should be taken to find it and eliminate it

Vacuum Breakers

The condenser shell is equipped with one or more vacuum breakers The purpose of the vacuum breaker is to provide a means of quickly breaking the vacuum in the condenser in an emergency or when shutting down the turbine

The vacuum breaker can be any type of valve, but is usually a butterfly valve It may be operated by a motor-driven actuator, normally controlled from the control room Because large amounts of air are drawn into the condenser when the vacuum breaker is operated, the inlet is usually protected with a screen or other type of filter to prevent the introduction of debris into the turbine

852

Some vacuum breakers are mounted to provide a reservoir of condensate on top of the valve This configuration is shown in **Figure 10-14** The condensate helps seal the valve, and if there is leakage past the valve seat, condensate (not air) will be drawn into the condenser The reservoir is usually equipped with a level control mechanism, which maintains a set level of condensate in the reservoir by admitting makeup water when level falls to a set point due to leakage or evaporation

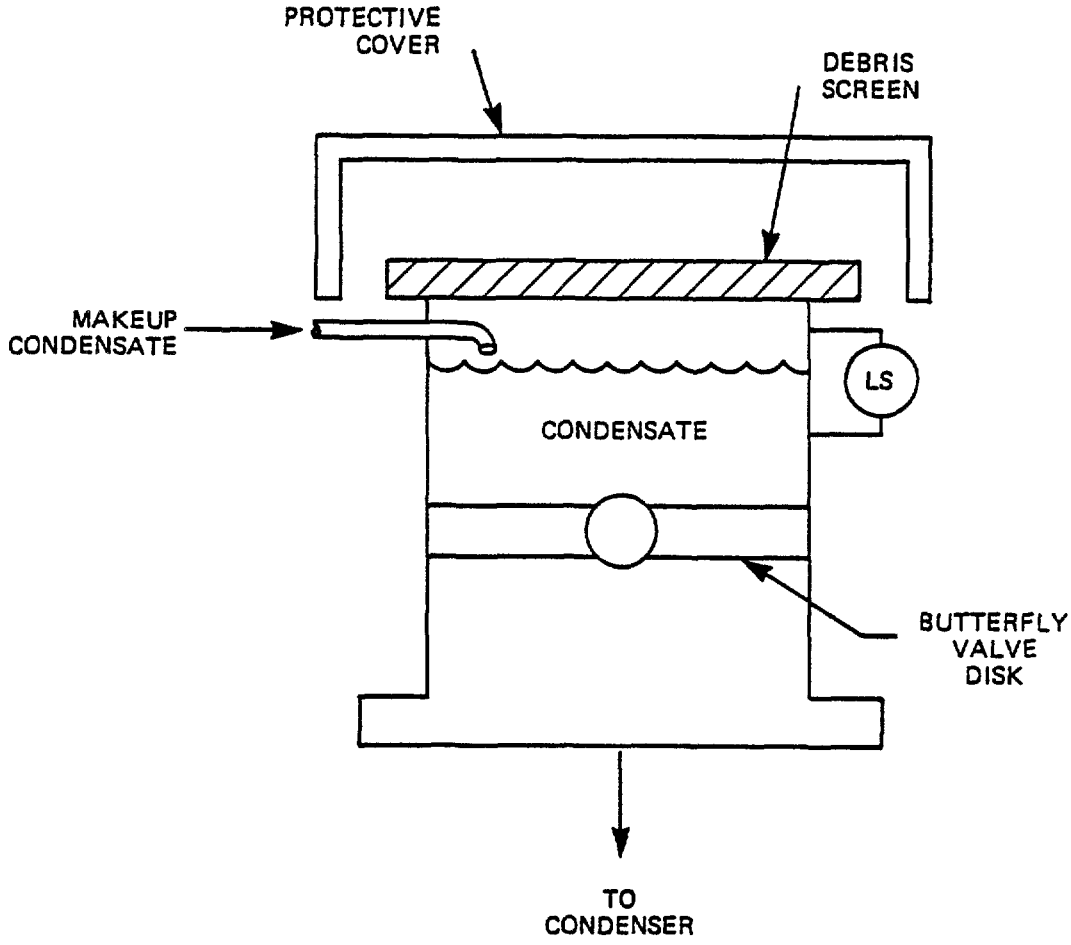

Figure 10-14 Vacuum Breaker Valve with Condensate Sealing

Condenser Cooling Water

Cooling water for the main condenser is supplied by the circulating water system which draws from and discharges to a river, the ocean, a reservoir, or a cooling tower The circulating water is routed through the condenser by large diameter pipes (generally several feet in diameter) that are connected to water boxes on either end of the condenser shell where the tubes pass through the tube sheets These water boxes serve

853

as plenum chambers on the supply end and collecting chambers on the exit end of the tabes They are designed to minimize turbulence and the resultant energy losses most are of welded steel construction and are lined with a material such as rubber, epoxy, or cement to minimize erosion and galvanic corrosion between themselves and the copper-based alloys in the tabes and tube sheets Additionally, zinc anodes are normally installed in the water boxes as sacrificial elements They are particularly important where the circulating water is seawater or brackish water, either of which is an ideal electrolyte for galvanic corrosion

Water boxes are bolted to the condenser shell over the tube sheets Bolting allows for removal and replacement of tubes because tube lengths are more than over 40 feet

Almost all condensers are provided with inlet and outlet valves Circulating water inlet and outlet valves to the condenser are usually large diameter butterfly valves Most condensers have a divided circulating water flow path through the condenser, so two inlet and two outlet valves per condenser are provided This arrangement allows isolation of one-half of the condenser water side while the plant is operating at one-half load This isolation would be necessary if a tube leak developed in one side of the condenser water side and the plant could not be completely shut down to repair or plug the leak, or if the tubes needed cleaning On once-through circulating water condensers, outlet valves mav not be installed

The inlet and outlet valves are normally motor operated In some plants, only the inlet valves are motor operated, the outlet valves being operated manually In these plants, the inlet valve to the condenser is often the discharge valve from a circulating water pump Indication of valve position is usually provided in the control room

Vents are provided on each water box to allow air to escape during system charging and filling and to vent air trapped in the circulating water that may accumulate in the high points of the water boxes It is extremely important that this air be vented and not allowed to accumulate As the air collects it will lower the liquid level in the water box If the level gets low enough some of the condenser tubes may not receive any cooling water, which reduces the heat transfer efficiency of the condenser

854

On units with manual vents, the water boxes should be vented periodically or whenever air is seen in the gage glasses Some units have manually operated vents on the inlet water boxes and automatic vents on the outlet water boxes These condensers usually have tubes that slope up slightly toward the outlet end, which will cause the air to accumulate in the outlet water box during normal operation

Some units, usually condensers that utilize once-through cooling, are equipped with vacuum priming systems In once-through systems, a siphon effect is created by the returning circulating water falling from the condenser elevation to the discharge point This siphon effect results in air being pulled out of solution in the condenser water boxes and collecting there The vacuum priming system continuously removes this air from the water boxes during startup and normal operation to prevent the condenser tubes from becoming air bound During system fill and startup, the vacuum system ensures that high points in the condenser are filled with circulating water

The vacuum priming system is normally composed of one or two vacuum priming pumps (or air ejectors), air removal traps, and associated piping A diagram of a typical vacuum priming system is provided in **Figure 10-15**

The priming air ejectors are usually single-stage, steam-driven ejectors sized to overcome the siphoning vacuum created in the water boxes The pumps take suction on air traps located off high points in the condenser water boxes The air traps prevent the entry of circulating water into the vacuum system which could flood the system The air-steam mixture from the priming ejector is usually exhausted to atmosphere

Condenser Tube Cleaning

The main problems with operation of the condenser water side are corrosion, erosion, and fouling of the condenser tubes In once-through condensers using seawater, marine growths such as barnacles and algae can cause fouling and possibly plugging of the condenser tabes Sand entrained in the seawater can sometimes cause erosion of the inner surfaces of the tabes and can eventually lead to tube leaks

This problem is controlled by limiting the velocity of the circulating water through the tubes (a system design consideration)

855

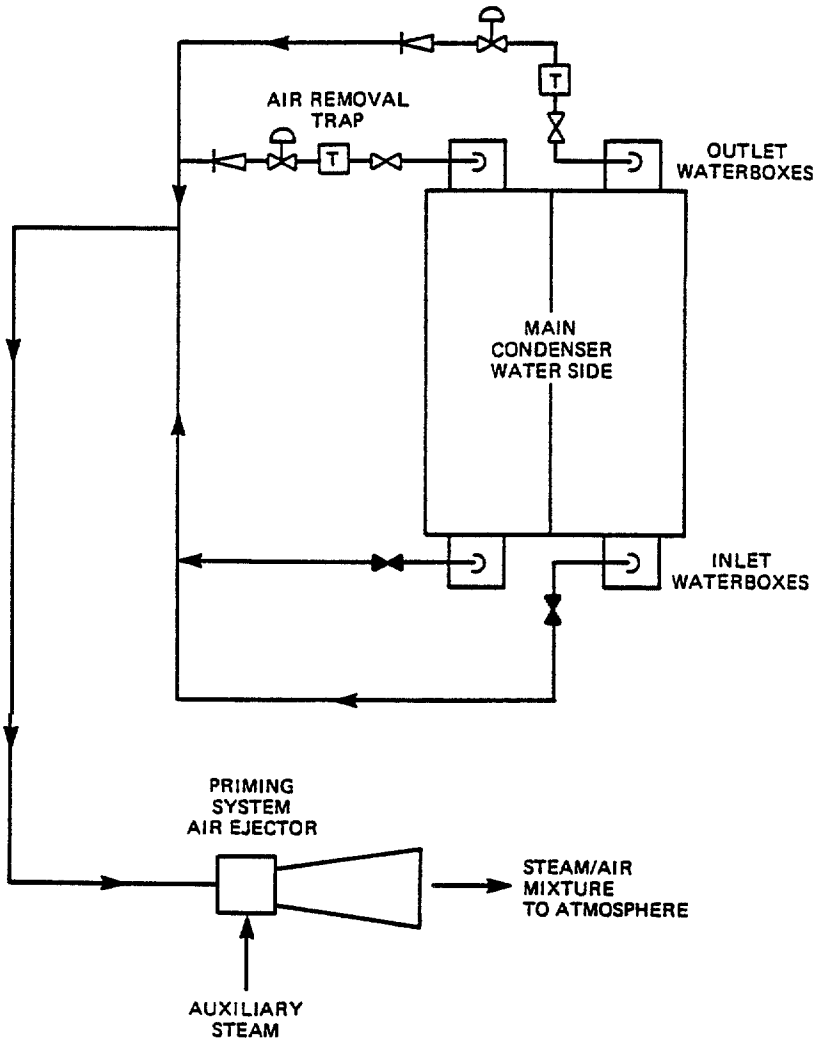

Figure 10-15 Vacuum Priming System

Three basic methods of cleaning the condenser tube water sides are back washing, mechanical cleaning, and chemical cleaning On condensers so equipped, flow through the condenser can be reversed, back washing the tube This procedure is particularly useful in removing debris that may be blocking the inlet water box and tubes This procedure is only possible on condensers that have the necessary extra valves and piping installed

856

The second method is mechanical cleaning One type of mechanical cleaning is with a continuous cleaning system, the most common being the Amertap tube cleaning system This system circulates abrasive sponge rubber balls through the condenser tubes during operation The balls clean the tubes as they pass through, they are collected in the circulating water outlet piping, cleaned, and reused A diagram of this system is shown in **Figure 10-16**

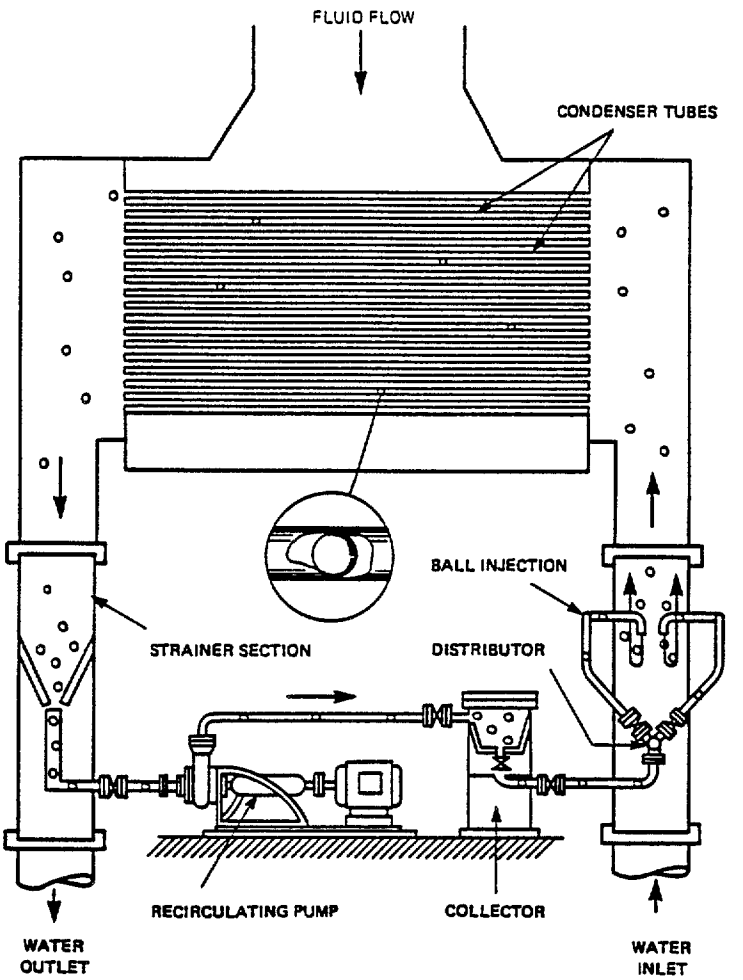

Figure 10-16 Continuous Tube Cleaning System

If the condenser is out of service or if load is reduced below 50%, the water boxes may be entered and the tubes cleaned manually The tubes are cleaned by pushing brushes or metal scrapers through the tabes with high pressure air or water often, one side of the condenser water side will be shut down to allow for debris removal from the inlet water boxes If this debris is not periodically removed, the inlet to the condenser tubes can become blocked, reducing condenser efficiency

857

Chemical cleaning of the condenser tubes is the least desirable method of cleaning Usually, chemical cleaning agents use an acid-foam mixture that is applied when the plant is shut down Chemical cleaning is much more expensive than mechanical cleaning

Another method of tube cleaning, commonly known as a hydroblaster is also used It consists of a spray nozzle that fits into the condenser tube and may be drawn along its entire length water at very high pressures is sprayed through the nozzle Results comparable to chemical cleaning have been attained using the hydroblaster

Tube leaks allow main circulating water to enter the steam side and mix with the condensate, contaminating it If the leak is small, a condensate polisher will be able to remove the contaminants If the leak is large, load on the plant may have to be reduced and the leaking circulating water side isolated and drained

Leaking tubes are always plugged at both ends Depending on operating conditions, up to about 15% of the tubes in a condenser may be plugged before retubing is required

Retubing is a costly and extensive operation, requiring the removal of condenser water boxes and replacement of all tubes with new ones Normally, plugging of leaking tubes will be conducted for as long as possible before retubing is considered

10 1 3 Condenser Testing

In routine condenser testing the parameters that are generally determined are the overall cleanliness factor, terminal temperature difference, and the condenser pressure

The cleanliness factor is usually the ratio of a design heat transfer coefficient determined from HEI data to the overall heat transfer coefficient This design heat transfer coefficient is determined in the same manner as described in the method for calculating condenser performance curves

The parameters that must be measured for such testing are the condenser pressure, the circulating water inlet and discharge temperatures, and the heat load on the condenser Measurement of the heat load is the most difficult of these There are

a number of different ways of determining the heat load, and most of them are an approximation The most direct method is to measure the circulating water flow rate and the temperature rise across the condenser The heat picked up by the circulating water, calculated as the product of the mass flow rate, the temperature rise, and the heat capacity of the water, is the heat load The problem with this method in practice is making an accurate measurement of the circulating water flow rate In most power plants no provision is made for determination-of this parameter directly It is most offen estimated using design pump curves of flow versus head, which can result in considerable inaccuracy because the design curves are seldom verified by testing Also, no provision is generally made for pump deterioration Such deterioration can be significant, particularly for circulating water pumps in open systems where the pumps take suction directly from a source, such as a river, with silt and debris that cause impeller and seal erosion

Circulating water flow is also sometimes estimated by chemical concentration techniques that involve injecting a chemical at the circulating pump inlet and checking the chemical concentration at the discharge of the condenser This method can have wide variations in accuracy and generally does not provide for repeatable, trendable results The best way to determine circulating water flow rate is by direct measurement An essential requirement for accurate flow measurement, regardless of the flow alement used, is that the measurement be made in a location where there is a straight run of pipe before and after the point of measurement The velocity profile in such locations is well developed and symmetric, and produces an accurate measurement using flow elements such as the Annubar Access to such a location, however, is not always possible Many plants have the circulating water pipes buried from the pump discharge to the entrance and discharge of the condenser The only accessible portion of this piping is generally at the entrance and exit to the condenser near 90° elbows as shown in **Figure 10-17**

Attempts to measure flow at the accessible locations for the arrangement shown in **Figure 10-17** using nonintrusive, ultrasonic f low-measuring devices have been made They have not, however, resulted in repeatable results

859

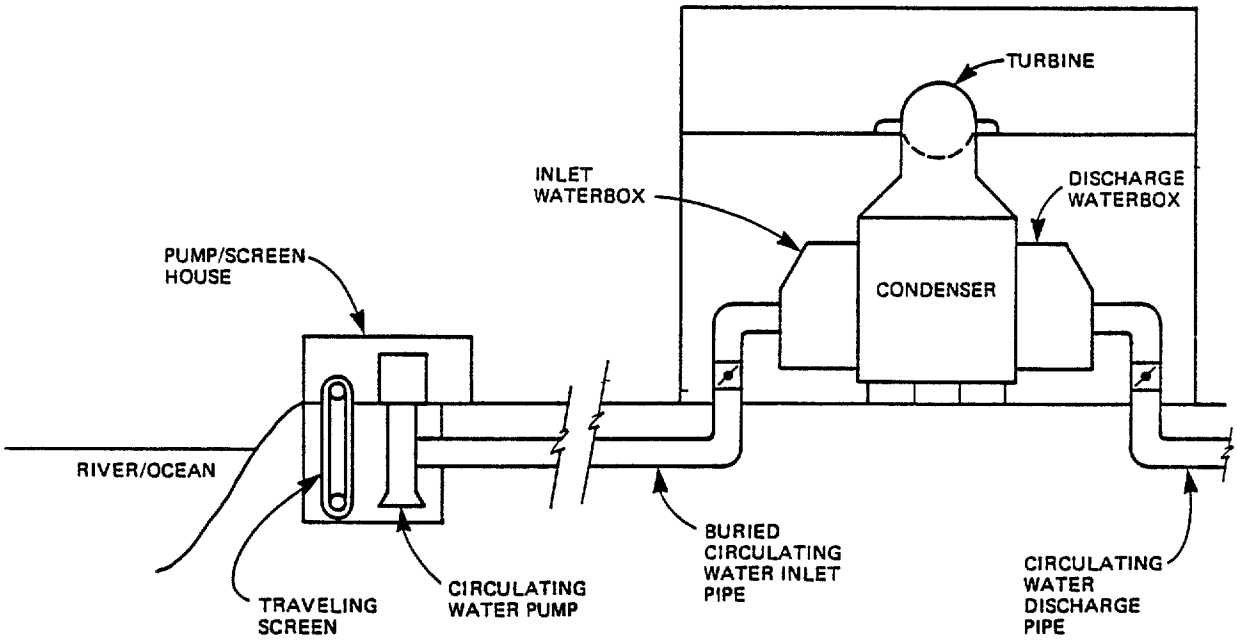

Figure 10-17 Typical Circulating Water System Arrangement

Another method of determining heat load is to determine the mass flow rates of all the flows into the condenser and their enthalpies as they enter All the flows end up at the same enthalpy, which is that of the condensate in the hotwell By summing the products of the individual mass flows with the enthalpy changes they undergo, it is possible to find the heat load The practical difficulty of this method is substantial

A full scale test of the main turbine is necessary to calculate the mass flow of the turbine exhaust and its enthalpy It is also necessary to measure any other flows and their enthalpies, such as drains to the condenser and the boiler feed pump turbine exhaust flow In practice, this rigorous procedure is seldom followed Many approximations and assumptions are usually made that simplify the process but sacrifice accuracy

One of the approximations of ten made is to take the heat load as the product of the condensate flow from the hotwell to the condensate pumps and the difference between the enthalpy of the condensate at that point and an assumed, average value of the enthalpy of the steam entering the condenser, usually taken to be 950-970 Btu/lb

Another method involves taking a heat balance around the tarbine cycle The heat charged to the turbine cycle is calculated, then the gross generator output and any other heat or energy losses other than the heat rejected to the condenser are subtracted from that heat The heat energy that remains is the heat rejected to the condenser Once again, the practical difficulties of this method are considerable if accurate results are required An accurate turbine cycle test is the only really accurate way of determining the heat charged to the cycle

While the heat load on the condenser is perhaps the most difficult parameter of performance to measure, it is not the only area of difficulty Accurate determination of the condenser pressure is also a problem because the steam in the condenser is decelerating from a very high speed to rest The velocities of steam at various places in the exhaust hood are very different, which can result in different pressures being measured in different parts of the exhaust hood The importance of accurate pressure measurement may be appreciated when one considers that an error of only 0 1 inch Hg can result in a difference of 2°F in saturation temperature

Experience has shown that to obtain an accurate determination of that pressure, it should be measured using a device called a basket tip at a number of different points in the exhaust hood

Finally, in the area of measurement of parameters, it is difficult to determine accurately the temperature of circulating water leaving the condenser because of temperature stratification at the outlet of the condenser Some tests have shown as much as 9°F temperature difference when traversing across the circulating water discharge pipe Four temperature measurements at 90° spacing in each circulating water discharge pipe are needed to overcome this error

861

With all the difficulties inherent in testing condensers, one might rightly conclude that it is difficult to devise a test that will provide meaningful results That is in fact the case, particularly if absolute accuracy is required It is possible, nonetheless, to do testing that will provide meaningful trendable results in the sense that they will be repeatable

Repeatability may be achieved by careful attention to gathering data and ensuring constant, repeatable test conditions The factors that should be considered include the following ,

- Backwashing and cleaning should be done immediately before the test Many units are equipped with provisions for backwashing and continuous tube cleaning

- Air removal equipment can have a significant influence on the performance of the condenser This equipment is necessary because there are small amounts of noncondensable gases in the steam that is condensed These gases can accumulate in the condenser over time and can 'blanket' the condenser causing significant reduction in the heat transfer of the condenser if air removal equipment is inadequate It is therefore necessary to ensure that the air removal equipment is operating properly before doing any testing

- The waterboxes must be full Air dissolved in the circulating water will come out of solution and accumulate in the waterboxes As a result, some top condenser tubes are empty and contribute nothing to heat transfer The sight glass on the condenser should be checked to ensure that it is full before beginning any test

  It is important not to open the waterbox vent to check the waterbox level on a condenser with a siphon-type circulating water system Air will be drawn into-the system rather than vented out

10 1 4 Calculation of Condenser Test Results

The following calculation procedure is one commonly used in determination of condenser test results It consists of determining the cleanliness factor, terminal temperature difference, and amount of condensate subcooling The last two are straightforward calculations The first is considerably more involved

862

The cleanliness factor is takin as the ratio of the design cleanliness factor to the actual The design cleanliness factor is determined using HEI data and algorithms in a manner similar to the way it is determined in calculating the condenser performance curves As mentioned earlier, this method can lead to some error because the HEI standards used are for design, not performance monitoring, and as such they tend to be conservative Specifically, the tube material and thickness correction factors given by HEI, shown in Table 2, have been criticized by some as being too conservative, particularly for titanium and stainless steel

Also, the temperature correction factors shown in **Figure 10-6** were determined from tests where the lowest temperature used was about 55°F Values for temperatures below 55 °F were extrapolated because it would generally be unreasonable to design a condenser for lower temperatures, considering total condensing area and other factors Obviously, however, it is often necessary to perform tests at temperatures lower than 55"F, and this may result in the introduction of some error

The HEI standards are nonetheless the best available information for predicting performance They have been used in calculating test results for many years with success One should simply be aware of their limitations

The calculation procedure that follows is very similar to that for condenser performance curves The curves and tables used in the procedure are the same as those used for that calculation It is assumed that heat load is determined by taking the product of the circulating water flow rate, the circulating water temperature rise, and its heat capacity

10 1 5 Determination of Cleanliness Factor

Step 1 Calculate heat load

$$Q = G \times 60 \times 1/7\ 481 \times \rho \times c_p \times (T_o - T_i)$$

Where

Q	=	heat load (Btu/hr)
G	=	circulating water flow rate (gpm)
60	=	a constant (60 min/hr)

7 481	=	a constant (7 481 gal/ft^3)
ρ	=	density of water at the circulating water inlet temperature (from Figure 10-6) (lb/ft^3)
c_P	=	specific heat capacity of water at the circulating water inlet temperature (from Figure 10-7) (Btu/lb- °F)
T_o	=	temperature of circulating water at the outlet (°F)
T_I	=	temperature of the circulating water at the inlet (°F)

Step 2 Calculate actual heat transfer coefficient

$$U_a = Q/(\Delta T_{lm} \times a \times L \times N_T)$$

where

U_a	=	actual heat transfer coefficient (Btu/hr-ft2)
ΔT_{lm}	=	log mean temperature difference (°F) (finding T_{SAT} from the steam tables using condenser P_{SAT})
a	=	surface area per unit length per tube (from Table 1) (ft ^{2}/ft)
N_T	=	number of unplugged tubes
L	=	effective tube length (ft)

Step 3 Calculate the velocity of water through the tubes

$$V_T = \frac{N_P \times G}{N_T \times v}$$

where

V_T	=	velocity of circulating water through tubes (ft/sec)
N_P	=	Number of passes in the condenser (dimensionless)
G	=	circulating water flow rate (gpm)
N_P	=	number of unplugged tubes
v	=	flow per tube at a circulating water velocity of 1 ft/sec (from Table 1) [gpm/(ft/sec)]

864

Step 4 Determine the ideal heat transfer coefficient from the following

$$U_I = C\sqrt{V_T}$$

where

U_I	=	ideal heat transfer coefficient (Btu/hr-ft ^{2}-°F)
C	=	an empirical constant determined by HEI (from Figure 10-4)
V_T	=	velocity of circulating water through tubes from Step 3 (ft/sec)

Step 5 Determine the design heat transfer coefficient from the following

$$U_D = U_I \times C_M \times C_T$$

where

U_d	=	design heat transfer coefficient (Btu/hr-ft ^{2}-°F)
U_I	=	ideal heat transfer coefficient (Btu/hr-ft ^{2}-°F)
C_m	=	tube material correction factor (from Table 2) (dimensionless)
C_T	=	circulating water temperature correction factor (from Figure 10-5) (dimensionless)

Step 6 Finally, the cleanliness factor is calculated from the following

Cf = (Ua/Ud) x 100%

where

C_f	=	cleanliness factor (%)
U_a	=	actual heat transfer coefficient (Btu/hr-ft ^{2}-°F)
U_d	=	design heat transfer coefficient (Btu/hr-ft ^{2}-°F)

10 1 6 Factors Affecting Condenser Performance

Several factors directly affect condenser performance It is important for plant engineers to understand the symptoms and causes of these problems so that performance degradation can be recognized and corrective action initiated

865

Figure 10-18 shows the effect of five simulated conditions that might be expected from the condenser over a period of time Condenser load, absolute pressure, steam temperature (converted from the absolute pressure at saturation conditions), circulating water inlet and outlet temperature, and air leakage are measurements that would be monitored routinely and are plotted over the simulated time period The terminal temperature difference (TTD) represents the difference between the steam temperature and the outlet water temperature, and the temperature rise represents the increase in the circulating water temperature The initial temperature difference is the difference between the inlet circulating water temperature and the steam temperature By recording and checking these or other data periodically, the engineer can get a good indication of what is happening in the condenser

The following subsections discuss several factors that alter condenser performance

10 1 7 Low Circulating Water Flow Rate

A reduction in circulating water flow rate can be caused by tube plugging or fouling A reduction in condenser vacuum (an increase in absolute pressure) will occur, which results in an increase in condenser steam temperature With a constant inlet temperature, the circulating water outlet temperature will increase as will the terminal temperature difference operators can watch purmp discharge pressures and pump motor current for clues as to tube sheet plugging Typically, condenser condition can be returned to normal by backwashing or otherwise alleviating the low flow rate

Correctly designed backwash or reverse flow systems provide the required corrective f lushing action to maintain an open water circuit in the condenser while the unit is operating, thus avoiding the frequent and costly shutdowns that would otherwise be needed to open the condenser and carry out the necessary cleaning

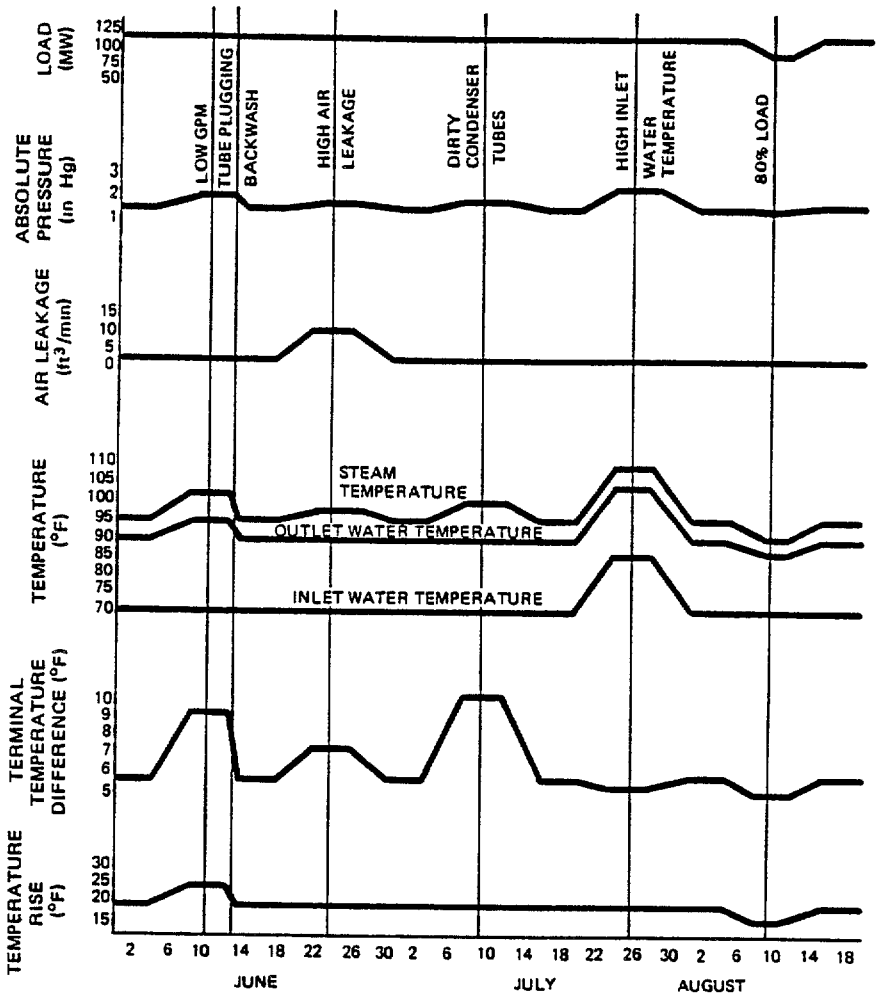

Figure 10-18 Condenser Conditions Over a Period of Time

10 1 8 High Air Leakage

During a period of high air leakage, when air blankets tube surfaces, condenser vacuum decreases An increased steam temperature and terminal temperature difference result The source of an air leak should be located as soon as practical Possible sources include leaking isolation valves, valve packings, improperly sealed turbine-condenser joints, or condenser shell weld leaks High air leakage hurts performance at all loads and especially at low loads

861

10 1 9 Fouled Condenser Tubes

Dirty or fouled condenser tabes affect condenser performance in a manner similar to high air leakage Condenser absolute pressure increases (with the decrease in' vacuum) because of the reduced heat transfer capability This increase in turn results in a higher steam temperature and a greater terminal temperature difference Poor heat transfer due to tube fouling affects vacuum performance at all loads, but is most noticeable at high loads

Backwashing has been mentioned as a means for preventing buildup of debris or silt Algae and slime accumulation can be controlled and minimized by periodically feeding chlorine into the circulating water Typically, the chlorine is fed for 10 minutes to produce at least one-half part per million chlorine residual at the condenser outlet Any old algae or slime deposits that have collected can be removed only by mechanical means

10 1 10 High Inlet Water Temperature

High inlet water temperature does not affect condenser performance per se, but it does affect most of the condenser temperature values and it increases the turbine backpressure For a constant load, there is no change in condenser dif f erential temperature However, the increased inlet temperature means the outlet temperature and steam temperature also increase This leads to a reduction in condenser vacuum (increased absolute pressure) and in terminal temperature difference

10 1 11 Reduction in Load

A reduction in turbine load does not affect condenser performance per se either, but the effects of this reduction on other parameters must be understood A reduced load results in a reduced temperature rise across the condenser and thus in a lower outlet temperature It follows that steam temperature, absolute pressure, and terminal temperature difference will decrease

Data taken at a different load may be compared with that at the desired load in a manner similar to that shown in **Figure 10-19** Load to the condenser is plotted in terms of Bta per hour or kill load versus temperature rise and initial temperature difference (difference between steam and inlet water temperature) Rise will be a straight line from zero at no load to the maximum rise at full load Similarly, the initial temperature difference will also be a straight line

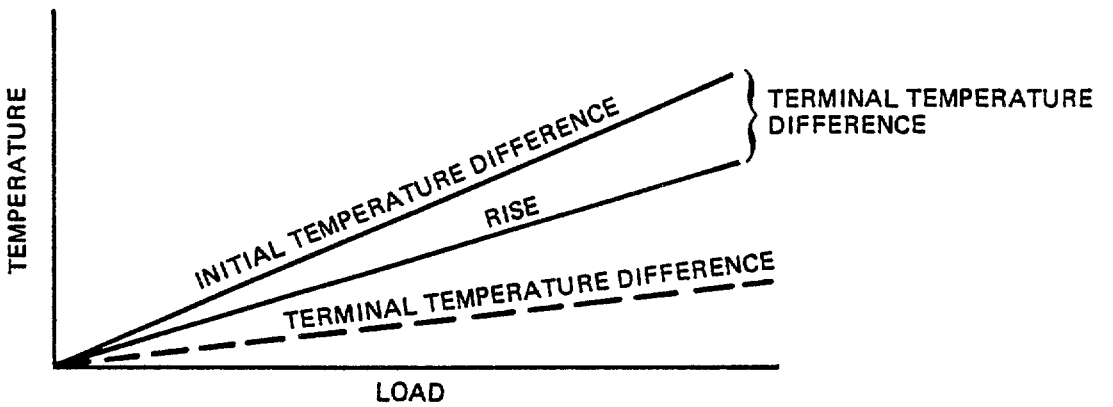

Figure 10-19 Effect of Changing Condenser Load on Operating Variables

The difference between these two straight lines represents the terminal temperature difference The rise will be the same line for all operating loads and water temperatures for a given circulating water flow There will be a separate curve for the initial temperature difference and the ternlinal temperature difference for various inlet temperatures

10 2 Deaerators

Deaerators are feedwater heaters, and they serve the same function as the closed feedwater heaters The difference between the closed feedwater heater and the open deaerating heater is in the method of heating the feedwater The open heater heats water by actually mixing the hot water with steam This method has advantages that, as we shall see, enable the deaerator to serve other purposes

869

10 2 1 Deaerator Theory

Early steam plants often exhausted steam to the atmosphere rather than condensing it and returning the condensate to the steam cycle As a first refinement in these noncondensing plants, the open feedwater heater was introduced The reason for using this heater at the time was simply to try to recapture some of the available heat energy that was literally evaporating into the air The reasoning was that if we saved the heat of vaporization of this escaping steam by using it to heat the feedwater, each pound of steam
would give up 970 Btu

The first open heaters were comparatively crude compared with those used today Steam was admitted to a vessel at atmospheric pressure Water was sprayed into the top of the vessel and allowed to cascade over trays to a reservoir at the bottom of the vessel Chemical impurities such as lime, were deposited on trays as the water flowed over them There was often a coke filter at the bottom of the vessel and before the drain to further clean up the water In such an open heater, the feedwater was generally heated to within about 1°F of the heating steam, thus the water was very nearly at the saturation point Excess steam was simply allowed to vent to atmosphere

The features and properties of the open heater have what may have been an unexpected benefit The solubility of gases in water is a function of the vapor pressure of the water in accordance with Dalton's law and Henry's law As the water in a pan of water on a stove approaches the boiling point, the solubility of gases (such as air) dissolved in the water approaches zero and these gases are released This is exactly what happens in an open heater The gases that are driven off are vented out of the vessel along with the excess steam

Removal of dissolved gases in boiler feedwater is important because they are very corrosive at the elevated temperatares in the boiler This is particularly true of oxygen, but also of carbon dioxide and ammonia Thus, the name deaerator is something of a misnomer because the device does not simply remove air, it removes corrosive gases All open heaters are not necessarily deaerators Open heaters whose effectiveness in oxygen removal aproaches about 7 to 5 parts per billion are classed as deaerators In modern power plants, almost no open heaters are built that are not deaerating

970

The thermodynamic analysis of the deaerator is similar to that of a closed feedwater heater but somewhat simpler The principal difference is in the analysis of heat transfer Parallel flow, counterflow, and log mean temperature difference do not apply The measure of effectiveness of heat transfer is still the TTD, which is defined in the same way The degree of approach is meaningless because the heating fluid, the steam, mixes with and condenses in the heated fluid, the feedwater

Feedwater is admitted to the deaerator at initial conditions of T, and P, and mixed with the steam in the deaerator The mixture of heated feedwater and condensate exits at T_2 and P_2 Note that h_2 is taken with the assumption that the exiting mixture has been heated to saturation temperature of the heating steam

We may write the following equation

$$w_1 h_1 + w_E h_E = w_2 h_2$$

where

w	=	mass flow rate ofentering feedwater (lb/hr)
h	=	specific enthalpyof entering feedwater (Btu/lb)
wE	=	mass flow rate of entering heating steam (lb/hr)
hE	=	specific enthalpyof the heating steam (Btu/lb)
w2	=	mass flow rate ofthe exiting feedwater (lb/hr)
h2	=	specific enthalpyof the exiting feedwater (Btu/lb)

The actual arrangement of the deaerator in - the power plant cycle is somewhat more complicated **Figure 10-20** shows a typical arrangement in a cycle as it would appear in a heat balance

Feedwater is generally pumped into the deaerator by the condensate pump The feedwater exiting the deaerator supplies suction to the boiler feed pump Heating steam is supplied to the deaerator from turbine extractions Deaerators can be used at a variety of pressures, ranging from as high as 800 psi to below atmospheric pressure

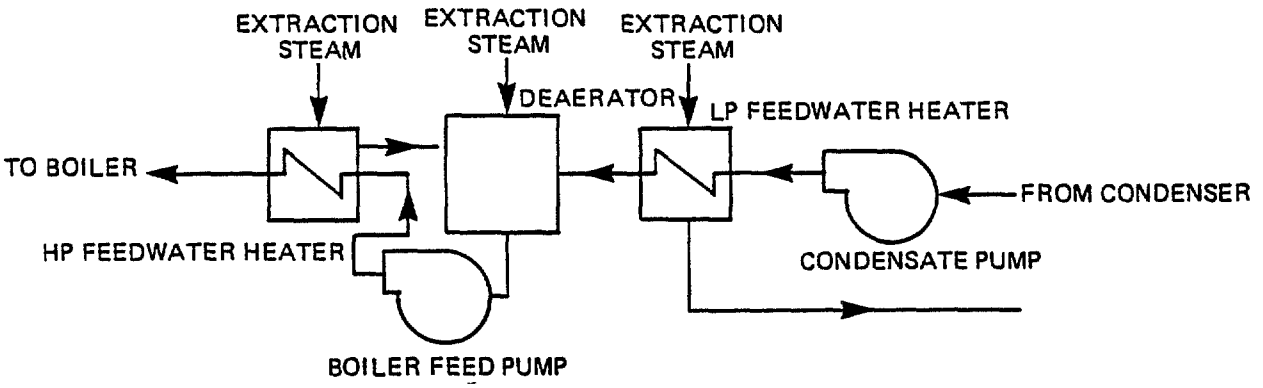

Figure 10-20 Deaerator in a Heat Balance Cycle

10 2 3 Design Details

The deaerator heats feedwater by mixing it with steam There are three mechanisms for accomplishing this mixing The first is the spray The water is sprayed in a f ine mist into the area of the deaerator that contains steam Dividing the water into tiny droplets increases the surface-to-volume ratio of the mass of water, thus facilitating better heat transfer

The second method is admitting steam to a volume of water The steam is generally admitted through a scrubber, which is simply a pipe with many tiny holes The many little jets of steam then bubble up through the water volume, much of the steam condensing as it goes, transferring its heat of vaporization to the volume of water Bubbling the steam through the water also agitates the water, which helps to deaerate it **Figure 10-21** shows an older deaerator design that uses both of these methods

The third method of heating is cascading the water over trays This causes the feedwater to form thin sheets from which gas bubbles can easily escape This method also has the advantage of agitating the water Agitation is important in the mechanism of deaeration The noncondensable gases form tiny bubbles in water as it is heated and approaches saturation This phenomenon is the same as the bubbles that cling to the side of a pan of water being heated to boiling on a stove Agitating the water and forming thin sheets of water help remove these bubbles from the water

872

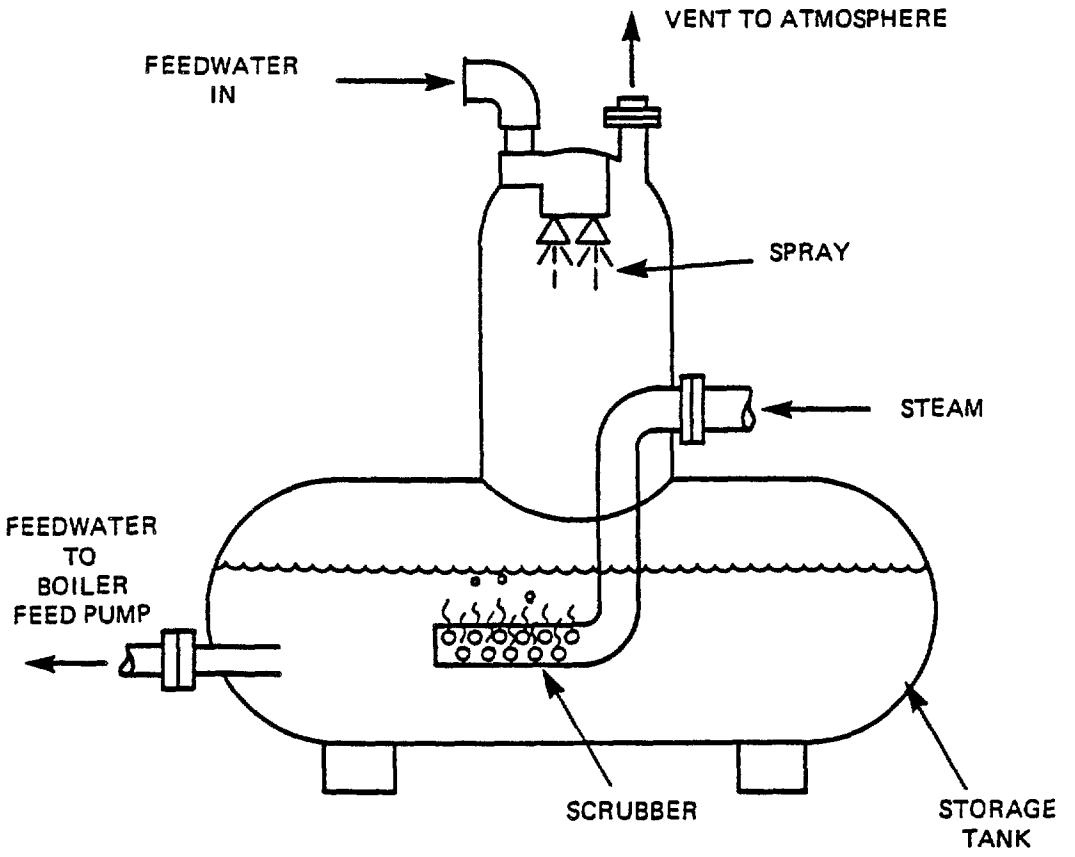

Figure 10-21 Deaerator and Deaerator Storage Tank

Some feedwater heaters use only one of the three methods described, and in some applications one method may be ineffective Most modern deaerators use only the spray and cascaded tray methods **Figure 10-22** shows a typical modern deaerator that uses trays and sprays with a storage tank

The deaerator must be vented, to carry off the noncondensable gases released from the feedwater This continuous vent can cause a loss of energy A further refinement that reduces this loss is the vent condenser which is simply a heat exchanger with deaerator vent steam on the shell side and cold feedwater that enters on the tube side Unfortunately, many of the noncondensable gases often become reentrained in the condensate draining back into the deaerator Because of this problem, vent condensers are not often used in modern plants Most of the vented steam is condensed and drained back into the deaerator The feedwater is heated somewhat before it enters the deaerator **Figure 10-23** shows a deaerator that employs both spray and cascading trays for heating and deaerating as well as a vent condenser

813

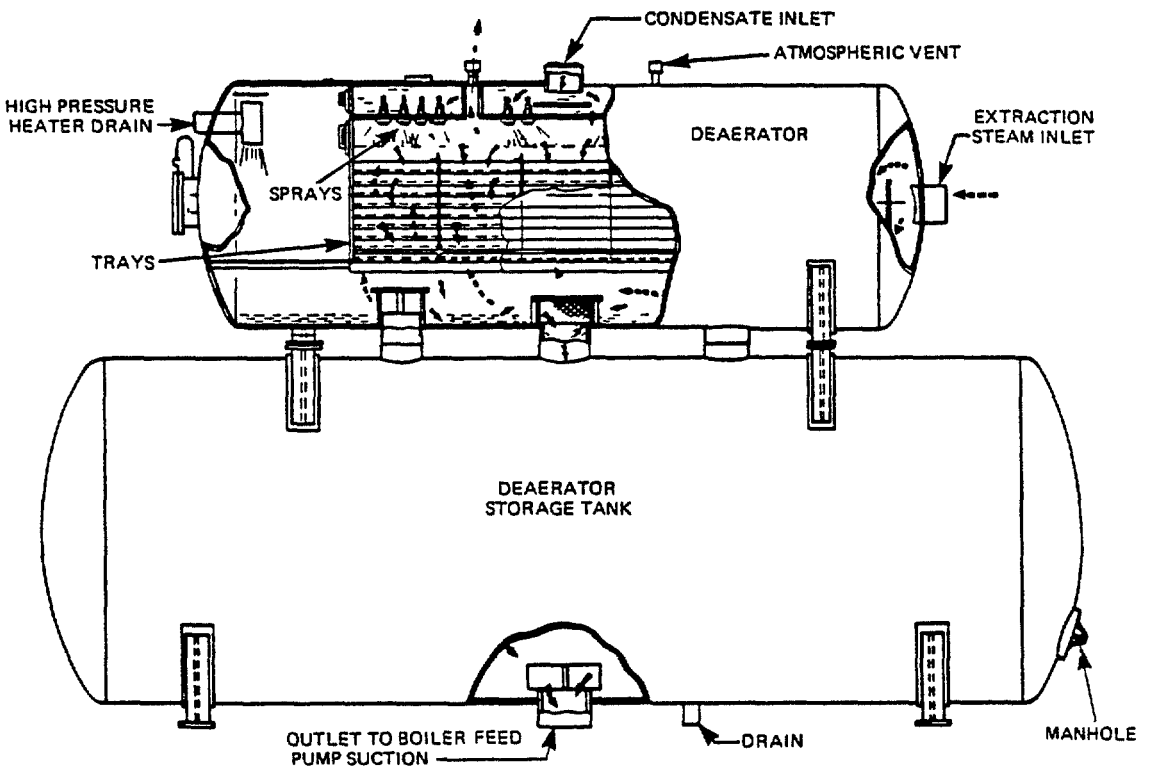

Figure 10-22 Typical Tray-Type Deaerator and Storage Tank

874

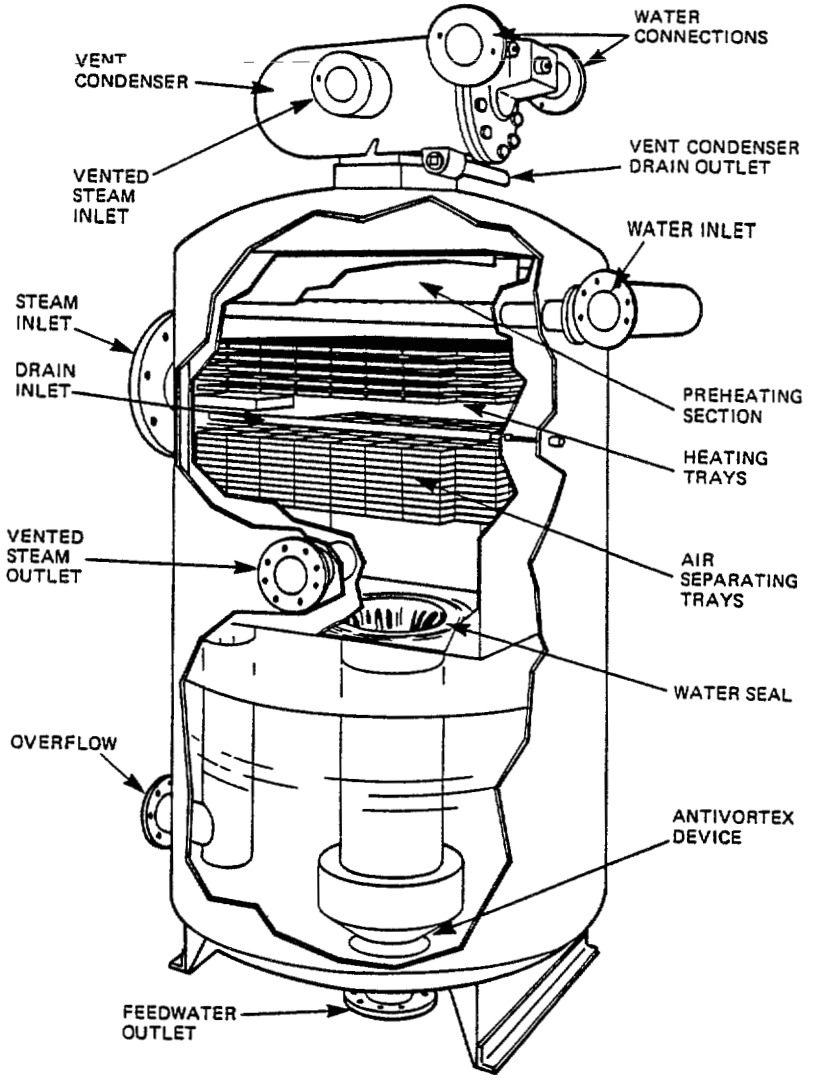

Figure 10-23 Deaerator with Integral Condensate Storage Volume

875

Use of materials in deaerators is a serious consideration The feedwater entering the deaerator is highly corrosive The material in the area where steam and water are mixed, therefore, must be highly resistant to corrosion, such as stainless steel or Monel - Many deaerators have a condensate storage volume, which may be integral (as shown in Figure 10-23) or separate The material in this area sees only deaerated water and thus may be of a less corrosion-resistant, and less expensive, material such as carbon steel

Another consideration in use of the deaerator in a power plant is that most deaerators supply suction to the boiler feed pump(s) The deaerator is generally placed as high in the power plant as possible This placement provides a water head that can be sufficient to satisfy the net positive suction head of the boiler feed pump(s) and can eliminate the need for booster pumps In addition, a large deaerator storage volume can provide an excellent control volume for the system, which adds operational flexibility to a plant, without this volume, loss of a booster pump would immediately cause the boiler feed pump(s) to lose suction

10 2 4 Deaerator Testing

Testing of deaerators, as with closed feedwater heaters, is very straightforward Generally the TTD is the only criterion of performance determined As with closed feedwater heaters, the pressure inside the deaerator should be measured at the shell, not at the turbine extraction flange The condensate temperature is best measured at the deaerator storage tank

Most plants of recent vintage have continuous, on-line monitoring of dissolved oxygen at the discharge of the deaerator When testing for dissolved oxygen beyond the existing monitor is done, usually a colorimetric test is used

It is important to ensure that drain and vent valves are in the proper position Drains for equipment other than other heaters of ten go to the deaerator These drain valves should also be checked to ensure that they are in their normal positions

If problems are suspected from the test results, either from a poor TTD or from a high dissolved-oxygen level, one additional testing provision may be in order--to check for air in the entering feedwater

876

10 2 5 Typical Deaerator Problems

Problems with the deaerator itself are generally the result of either physical damage or jammed spray valves The type of damage that can occur is collapsed trays or dislodged spray valves Such damage is often caused by water hammer and flashing of steam, which can create substantial mechanical forces

The spray valves are typically spring loaded and are designed to open and close as a function of load Normally they disperse incoming feedwater in a conical curtain-like pattern If they become jammed, they will cause the spray pattern to be less than optimum, resulting in poor deaeration

Design problems are generally related to deaeration They may concern the design or capacity of the trays If the deaerator is undersized, it will often have inadequate venting and inadequate agitation, which both result in poor deaeration

Detection of deaerator problems in operation is often difficult The TTD does not often show significant change even when substantial problems exist A better indication of performance is the amount of dissolved oxygen Commonly, however, on-line dissolved oxygen monitoring equipment is often not well calibrated and its accuracy is usually not good Many plants have no on-line monitor at all Problems that result from less than adequate deaeration often take years to become apparent Careful monitoring of deaerator performance and routine inspection during outages are therefore essential

377