PN-AAU 870
94648

UNITED STATES AGENCY
FOR INTERNATIONAL DEVELOPMENT
SHELADIA ASSOCIATES INC.

CANAL ROADS FEASIBILITY STUDY

VOLUME I

TEXT

MUHAMMAD AYOOB ABIDI AND
ASSOCIATES (PRIVATE) LTD.

MAY 198

VOLUME I

TABLE OF CONTENTS

		Page
	Title Page	i
	Table of Contents	ii
	List of Tables	viii
		and Volume II
	List of Figures	Volume II
	List of Appendices	Volume II
	List of Maps	Volume III
	Abbreviations	xi
	Executive Summary	1
1.	INTRODUCTION	10
	1.1 Introduction and Acknowledgements	10
	1.2 Background of the Project	12
	1.2.1 Agriculture and Irrigation in Pakistan's Economy	12
	1.2.2 Project History	38
	1.3 Terms of Reference	41
	1.3.1 Aims of the Canal Road Study	41
	1.3.2 Scope of Work	41
	1.3.3 Project Elements	43
	1.3.4 Objectives of Canal Road Study	44
	1.3.5 Constraints	45

TABLE OF CONTENTS

		Page
1.4.	Consultants	46
1.4.1	Members of Consultants Team	46
1.4.2	Activities of the Consultants	46
1.5.	Conclusions and Recommendations	47
1.5.1	Conclusions	47
1.5.2	Recommendations	50
2.	REVIEW OF RELATED STUDY/PROJECT	52
2.1	Review of Feasibility Study "Canal Roads For Public Use" NTRC.Planning Commission.No.35,1979	52
2.2	Review of ISR Project Phase I	59
3.	DEPARTMENT OF HIGHWAYS	65
3.1	Existing Road Networks	65
3.2	Proposed Expansion Concurrent with ISR-Phase II	65
3.3	Farm to Market Roads	65
3.4	MNA and MPA Roads	65
4.	SELECTION OF CANAL ROADS	66
4.1	Route Selection	66
4.1.1	Background	66
4.1.2	Study Systems	68
4.1.3	Methodology	69

TABLE OF CONTENTS

	Page
4.1.4 Embankment Roads to be Constructed	71
4.1.5 Roads Outside Study Systems	78
4.2 Objective (Functional)Criteria	82
5. CANAL ROAD DESIGN	83
5.1 Type of Road	83
5.2 Road Pavement Design	90
5.2.1 Traffic Loads	91
5.2.2 Design Life and Traffic Growth Rate	91
5.2.3 Traffic Generation	93
5.2.4 Sub Grade Soil	101
5.2.5 Pavement Composition	102
5.3 General Cross Sections	104
5.3.1 Alignment	104
5.3.2 Cross Slopes	105
5.3.3 Formation Width	105
5.3.4 Pavement Width	105
5.3.5 Embankment Slopes	106
5.4 Structures	106
5.4.1 Existing Structures	106
5.4.2 New Vehicular and Pedestrian Crossings	106
5.4.3 Buffalo Ghats	107

TABLE OF CONTENTS

		Page
5.5	Shouldering	110
5.6	Slope Protection	112
5.7	Drainage	114
6.	CANAL ROAD COSTS	116
6.1	Construction Cost Estimates	116
6.2	Cost Escalation	118
6.3	Annual Operating and Maintenance Costs	123
6.3.1	Yardstick for Annual Maintenance of Roads in Punjab	123
6.3.2	Yardstick for Annual Maintenance of Canals in Punjab	130
6.3.3	Yardstick for Annual Maintenance of Roads in Sind	131
6.3.4	Yardstick for Annual Maintenance of Canals in Sind	131
6.3.5	Yardstick for Annual Maintenance of Roads in NWFP	131
6.3.6	Yardstick for Annual Maintenance of Canals in NWFP	138
6.4	Consultants Estimate of Road Operating and Maintenance Costs	138
7.	EQUIPMENT AND SUPPORT	145
7.1	Introduction	145
7.2	DOH and PID Equipment Circle Review	148

TABLE OF CONTENTS

	Page
7.3 Project Implementation	151
7.3.1 PID/DOH	151
7.3.2 Contractors	153
7.4 Equipment	164
7.4.1 Equipment Selection	164
7.4.2 Equipment Requirements	169
7.4.3 Maintenance	170
7.4.4 Parts	172
7.5 Technical Assistance	173
7.5.1 Training	174
7.5.2 Independent Consultant	175
8. SCHEDULE AND FOREIGN EXCHANGE BUDGET	177
8.1 Construction Schedule	177
8.2 Equipment	179
8.2.1 Capital Cost	179
8.2.2 Spare Parts	180
8.3 Technical Assistance	181
8.4 Summary Foreign Exchange Budget	182
8.5 Summary of Cost Estimates - CRP	183
9. PROJECT EVALUATION	184
9.1 Introduction	184
9.2 Methodology	185
9.3 Discounting : the Concept and the Rat Spare Part	

9.6.3 Canal Rehabilitation and Road Construction 199

9.6.4 Saving in Vehicle Operating Costs 201

9.6.5 Time Savings 204

9.7 Indirect and Non Quantifiable Benefits 206

9.8 Project Costs 209

9.8.1 Investment Costs 209

9.8.2 Operations and Maintenance Costs 210

9.9 Results of Economic Analysis 213

9.9.1 Aggregation at National and Provincial Levels 213

9.9.2 Individual Systems 216

9.10 Sensitivity Analysis of Aggregated CRP 219

9.11 Sensitivity Analysis of Individual Systems 229

9.12 Financial Analysis 237

9.13 Summary and Conclusions 241

LIST OF TABLES

Table No.	Title	Page
1.1	Water Availablility at Farm Gate, by Source	17
1.2	Area Irrigated by Province and by Source of Water	18
1.3	Wheat Yield and Irrigation in Pakistan	19
1.4	Current Rural Population, Density and Growth in 13 Selected Districts	23
1.5	Land Utilization	25
1.6	Number of Area by Private Farms by Tenure	28
1.7	Number of Area of Private Farms by Size	29
1.8	Procurement/Support Prices of Agricultural Commodities	32
2.1	Local Rural Roads Deficiency	53
2.2	Phase I Performance of Contractors	60
2.3	Contracts Awarded/Completed by Responsibility Level	62
4.1	Embankment Roads to be Constructed	72
4.2	Punjab - Irrigation System-Wise, Phase-Wise Road Length Recommended for Metalling	73
4.3	Sind - Irrigation System-Wise, Phase-Wise Road Length Recommended for Metalling	74
4.4	NWFP - Irrigation System-Wise, Phase-Wise Road Length Recommended for Metalling	75
4.5	Phase-Wise Length Recommended in Punjab, Sind, NWFP	76
4.6	Canal-Wise Break-up of Total Length Recommended in Punjab, Sind, NWFP	77
5.1	Comparison of Paved Road and Shingle Road Costs - Sind, Province	86
5.2	Traffic Data Sheet - Jhang - Gogera System	97
5.3	Traffic Data Sheet - Jhang - Gogera System	98

5.4	Traffic Data Sheet - Depalpur System	99
5.5	Traffic Data Sheet - Mailsi System	100
6.1	Total Estimated Cost, System-wise, Phase-wise (Punjab)	119
6.2	Total Estimated Cost, System-wise, Phase-wise (Sind)	120
6.3	Total Estimated Cost, System-wise, Phase-wise (NWFP)	121
6.4	Escalated Project Cost (Punjab)	124
6.5	Excalated Project Cost (Sind)	125
6.6	Escalated Project Cost (NWFP)	126
6.7	Yardstick for Annual Maintenance and Repair of Roads in Punjab	127
6.8	Yardstick for Annual Maintenance and Repair of Roads in Punjab	128
6.9	Yardstick for M&R to Roads in Sind in the year 1983	132
6.9.1	Revision of Yardstick for Annual Maintenance for 10' Black Top Road by Updating the Year 1980-83 Establishment	133
6.9.2	Revision of Yardstick for Annual Maintenance for 10' Black Top Road by Updating the Year 1980-83 Road Structures	134
6.9.3	Revision of Yardstick for Annual Maintenance for 10' Black Top Road by Updating the Year 1980-83 Patch Repairs Work and Resurfacing	135
6.9.4	Revision of Yardstick for Annual Maintenance for 10' Black Top Road by Updating the Year 1980-83 - General Operation	136
6.9.5	Maintenance Yardstick for Canals, Drains and Flood Bunds in Sind.	137
6.10	Comparison of Metalled, Shingle, and Waterbound Macadam O&M Costs	141
6.11	Summary of O&M Yardsticks vs Estimates by Consultants	143

7.1	Comparison of Equipment Daily Rental Rates	152
7.2	Comparison of Total Rental Rates - PID/DOH vs. Private Contractor	156
7.3	CRP - FE Budget (Revised for 35% Contractor Involvement)	161
7.4	Comparison of CRP Estimates - Consultants Recommendation vs. Increased Contractor Involvement	162
8.1	Summary Foreign Exchange Budget	181
8.2	Summary of Cost Estimates - CRP	182
9.1	Production of Major Crops in Years 0 to 20 Without and With Project and Value of Increase Due to Acceleration of Growth	198
9.2	Reduction in Off-Road Hauling Distance and Costs	200
9.3	Canal Maintenance Savings with Road Construction	202
9.4	New Roads, Traffic and Savings in VOC	203
9.5	Value of Time Savings with CRP, by System	205
9.6	Economic Investment and O&M Costs of CRP by Systems and by Years	211
9.7	Summary of CRP: Costs, Benefits and Evaluative Measures	214
9.8	Ranking of Systems by Evaluative Measures	218
9.9	Summary of Sensitivity Analysis for Aggregated Canal Roads Project	221
9.10	Summary of Sensitivity Analysis for Individual Systems	230
9.11	Repayment Capacity and Capital Recovery Charges	240
9.12	Ranking of CRP Systems for Priortization, and Costs	245

Abbreviations, Acronyms, Etc.

ADB	Asian Development Bank
ADP	Annual Development Plan
ADT	Average Daily Traffic
AID	See USAID
Bal	Balance Canals Excluding ISR I & II
B/C	Benefit / Cost Ratio
Br	Branch Canal
CRP	Canal Roads Project
C&W	Provincial Department of Communications and Works
C.S.R	Consolidated Schedule of Rates (Punjab)
DC	District Council
D/D	Deduct
dy/Disty	Distributory
DOH	Department Of Highway
FE	Foreign Exchange
4WD	Four Wheel Drive
FSL	Full Supply level
GDP	Gross Domestic Product
GOP	Government of Pakistan
ha	hectare or hectares
i/c	Including
IRR	Internal Rate le of Rates (Punjab)
DC	District Council
D/D	Deduct
dy/Disty	Distributory
DOH	Department Of Highway
FE	Foreign Exchange

4WD	Four Wheel Drive
FSL	Full Supply level
GDP	Gross Domestic Product
GOP	Government of Pakistan
ha	hectare or hectares
i/c	Including
IRR	Internal Rate
NTRC	National Transport Research Centre
NWFP	North West Frontier Province
O&M	Operations and Maintenance (of roads)
O&O	Owning and Operating (Cost)
Pucca	Used as a general term for paved road
P&D	Planning and Development Departments in Provincial Governments
PC-1	A GOP Document defining the requirements for a development project equivalent to AID`s Project paper
PID	Provincial Irrigation Department
PM	Per Mile
PV	Present Value
PW	Present Worth (interchangeable with Present Value)
RD	Reduced Distance
Rs.	Rupees - The Pakistani Monetary Unit. Currently (2/87) Rs. 17.12 = $ 1.00
t	Tonne of 1000 Kgs
TAT	Transportable Agricultural Tonnage
TSC/TST	Technical Services Contractor/Team
TST	Triple Surface Treatment
T.T.Singh	Toba Take Singh (Faridabad)

USAID	United States Agency for International Development
USG	United States Government
VOC	Vehicle Operating Cost
WAPDA	Water and Power Development Authority

Executive Summary

The population and need to transport goods within Pakistan has been accelerating for many years outpacing the ability of the Provinces to expand the road network. With increasing pressure from the rural population to provide farm to market and interurban transport routes the GO Provinces resurrected the concept of using the private canal inspection paths as a base for developing public roads.

Although the idea originated over a decade ago it was deferred primarily by the PIDs who feared increased problems of operation and maintenance of the canal systems due to the increased traffic. Since these concerns were first raised several canals have been officially opened to the public without experiencing any of the anticipated problems.

Meanwhile in 1982, with USAID co-operation, ISR Phase I was commenced to rehabilitate some of the badly deteriorated canals. As this first phase is now winding down and a proposed Phase II is in the late planning stage it was decided to quantify the incremental costs of building canal roads concurrent with the rehabilitation of USAID/GO Province identified canal segments.

This study, commissioned in late 1986, addresses the economic and social issues that would justify a canal road construction programme and, further, estimates the

cost of construction of those roads. The study centers on 13 designated systems in the Provinces of Punjab, Sind and NWFP.

The Consultants were not restricted to canals indentified for rehabilitation under Phase II but were instructed to consider canals or drains that would contribute to forming a road network that would integrate with the existing infrastructure. In some cases, to complete a grid, it has been necessary for the Consultants to recommend canal roads along Phase I canals and canals not yet scheduled for rehabilitation, or to connect to existing roads by improving or building short link roads.

The road maps received from the Provincial Highway Departments were updated and integrated with the Canal and Drainage maps. By integrating the three systems a clear picture emerged regarding canal/drain routes vis-a-vis road networks. From these composite maps it was possible for the Consultants to examine how the roads on the canal banks would fit in the overall road network and whether or not these additional facilities are socially and economically justifiable. The canal banks selected for metalling will open up new areas for development and will provide connections to Mandi Towns and important population centres besides being instrumental in forming a network with the existing roads.

The investigation and analysis centred on systems indentified by USAID as having the greatest potential for development and for contribution to the economy of the Provinces of Punjab, Sind and NWFP. Four Irrigations systems in Punjab, five in Sind, and four in NWFP have been analysed by the Consultants for canal road reconstruction and metalling. Project costs are summarized :

SUMMARY OF CRP ESTIMATED COSTS

Ref. Table 8.2

Construction	Miles	MRs.
Punjab.	596	918
Sind.	485	729
NWFP.	162	170
Total	1243	1817
Other Structures outside of road. bridges, crossings		35
Buffalo Ghats.		9
Sub Total		1861
Consulting Engineering Fee - 6%		112
Foreign Exchange Budget		442
Sub Total		2415
Escalation - civil works @ 6.5%		Included
Equipment Inflation (F.E.-8% equp.)		34
CRP TOTAL		2449 MRs.

The cost estimates have been worked out on the basis of site surveys of existing banks and the pavement design arrived at considering ten years design life, actual soil conditions, and expected average daily traffic with a growth rate of 7%.

Twelve foot single lane metalled roads with a formation width varying from 18 ft to 32 ft have been proposed. The cost for all proposed roads has been estimated using materials from the nearest sources and current equipment and material costs. Structures that are integral with the road are included in the estimate. Provisions for other structures, cattle ghats, pedestrian and other vehicular bridges that are deemed to be essential for a fully integrated network have been made after assessing the requirements during site surveys and are estimated separately.

The construction of the canal roads will primarily benefit the communities within three to four miles of the roads. From the start of construction the rural population can be involved as part of the contracting work force and later, perhaps, contracting to undertake the road maintenance. A reasonable local involvement with a modest training programme can be expected to raise the level of practical skills and will, in some cases, develop contracting expertise as a secondary industry in the farm communities.

The Consultants suggest a design and build approach to the road construction reducing the amount of pre-project surveying, testing and design. Provided with general cross sections and detailed specifications and experienced construction foremen the contractor, supervised by a local consulting engineer, will be able to build the embankment with design preceding construction by a mile or two thus adjusting design to meet actual conditions encountered in the site. This method is considered to be completely satisfactory in this situation where the technical requirements are relatively low and where the road alignment is fixed by the canal embankment and the road base is already in place requiring only slight lateral modification and compaction. There is however a need for constant supervision and a high degree of quality control, especially for compaction.

The equipment recommended are types that are already in common construction use in Pakistan. The significant departure is the provision of wedge or pad foot vibratory self propelled compactors to assure uniform compaction to DOH specifications. There are no compactors in Pakistan at the present time suitable for achieving the compaction required for highway subgrades given the soil and moisture conditions present. To ensure the required availability of the fleets over the five years an appropriate number of spare parts are

included in the foreign exchange budget.

The 13 irrigation systems designated as study areas are characterized by a similar dependence on agriculture, the importance of irrigation, and the existance of a need for improvement of the road network. However, important differences exist in size and population of the impacted areas, crops grown and their yields and importance, potential for improvement of yields, etc.

Four crops, wheat, rice, cotton and sugarcane, are used as a measure of agricultural production in the Provinces of Punjab and Sind. In NWFP, cotton is not grown; the crops used as indicators there are wheat, maize, sugarcane and (in one system) rice.

Normal growth in the agricultural sector will result in some increase in yield and adjustment of areas of crops. Only increases beyond such normal growth will be attributable to the new canal roads and can be considered benefits of this project. The improved roads network is expected to facilitate and lower the cost of transport of both inputs and produce, resulting in a greater financial incentive to farmers and leading to the use of more inputs, greater intensification of cropping, and greater output. The consequent increase in the value of agricultural production will contribute to the benefits of the project.

Additional roads within the irrigation system will

reduce the average distances from field to road, leading to savings in off-road hauling costs. Similarly, the average distance of villages from paved roads and bus routes will be reduced, bringing about savings in time; this also produces small benefits to the project.

Canal maintenance costs have included costs of maintaining the patrol roads or inspection paths on the canal bank. Where this road is upgraded and metalled, and its maintenance costs handled through a separate budget, savings in canal O&M costs will constitute a benefit to the project.

Costs of operating motor vehicles are heavily influenced by the nature of the road. Savings resulting from operating on metalled roads, compared to other non-metalled roads, have been established by independant sources. These savings will apply to the new roads of the Canal Road Project, and to the numbers of vehicles estimated on the basis of actual traffic counts. Project benefits from this source are considerable.

Benefits from these five sources were calculated for each of the 13 systems. Economic analysis compares the resulting streams of benefits with the cost stream. Total costs result from the combination of investment and construction costs over five years and O&M costs beginning in the second year, increasing as construction is completed, and continuing for the duration of the 30

year expected useful life of the road.

Results of the economic analysis are expressed via the conventional evaluative measures of Net Present Worth (NPW), Benefit Cost Ratio (B/C) and Internal Rate of Return (IRR), with emphasis on IRR.

The overall Canal Roads Project, made up of 13 systems, had an IRR of 19.56 which indicates strong feasibility. Even if costs were 10 percent higher and simultaneously benefits 10 percent lower than estimated, the overall project would still be feasible with an IRR of 16.82 percent. Expanding the construction of roads over 8 years instead of 5, with expenditures spread over the longer period and with O&M cost and benefits deferred until after construction, did not significantly alter the basic feasibility or IRR of the project. Reducing the period of analysis to 15 years, and disregarding any benefits that might accrue after that time, reduced the IRR to 15.65 percent at which level the project is still feasible.

Viewed as provincial projects with 4, 5 and 4 systems aggregated in Punjab, Sind and NWFP respectively, NWFP and Punjab are feasible with IRRs of 28.47 and 21.87. While Sind is marginally feasible at 13.59. It is recommended that reduction of the project's scope, if that is necessary, be done on the basis of individual systems rather than by provinces.

IRRs for individual systems ranged from 37.87 percent down to 10.75. Eleven of the systems proved feasible, with IRRs greater than the 12 percent opportunity cost of capital. Only two systems failed to achieve feasibility by this standard.

A ranking of the systems is provided to show recommended prioritization and to assist in determining systems to be included at various levels of funding.

Indirect and non quantifiable benefits include favorable impacts on employment, farm income, local land values, the foreign exchange balance, tax revenues, administrative efficiency and the rural exodus.

In summary the combination of quantifiable measures and non-quantifiable benefits advocates strongly that the Canal Road Project, taken as a whole is desirable and feasible. Those elements of CRP with IRRs greater than the opportunity cost of capital should be implemented.

1. INTRODUCTION

1.1 Introduction and Acknowledgements

This Report presents the findings, analyses and recommendations of an investigation undertaken in the Pakistan Provinces Of Sind, Punjab, and North West Frontier Province (N.W.F.P) between 21 December 1986 and 31 May 1987 by the Consultants Muhammad Ayoob, Abidi & Associates (Private) Ltd (MAAA). The purpose of the investigation was to study the feasiblity of upgrading existing canal inspection roads and / or constructing new canal roads into full access public roads. USAID had identified specific irrigation and drainage systems to be rehabilitated under the ISR Phase-II projects and the Consultants were instructed to determine the feasibility of simultaneous canal road construction and canal rehabilitation within these systems.

The cost of the canal inspection road conversion and new construction was quantified and a cost/benefit analysis made before identifying the recommended canal road programme.

The Consultants were assisted by many individuals and agencies and wish to thank them for their co-operaton and comments, in particular

i) USAID, Lahore and Islamabad

ii) Provincial Communications and Works Departments

iii) Provincial Irrigation Departments

iv) Provincial Departments of Agriculture

v) NESPAK, in particular M/s. Z.S.N.Janjua and Mohammad Ehsan for constructive criticism of ISR-Phase I and supplying data pertinent to ISR-Phase II Canal Rehabilitation

vi) P R C Engineering Checchi Co.Inc., Messrs. Harold Creed and Fred Schantz.

1.2 Background of the Project

1.2.1 Agriculture and Irrigation in Pakistan's Economy

A - Importance of Agriculture

Pakistan has an agrarian economy. More than 70 percent of the population resides in the countryside and has agriculture--both crops and livestock production--as its major source of income. Although the share of agriculture in gross domestic product (GDP) has fallen from 55 percent in 1947 at the birth of the new Islamic republic of Pakistan to 25 percent in 1985-86, the decline in agriculture's importance represents diversification of the economy through rapid development of supporting sections. It is in no way an indication of slow growth in agriculture itself. Agriculture still remains the most vital sector of the economy.

Exports of raw and manufactured agricultural products accounted for more than 66 percent of the total foreign exchange earnings during July to March 1985-86. Agriculture is also the most important source of employment, where about 52 percent of the total working force is engaged. It is also the major supplier of raw materials for industry and the biggest consumer of products from the non-agricultural sectors. Presently, Pakistan's agriculture, stimulated by recent development of some infrastructure and introduction of institutions

and technical changes, is in the process of transformation from food grain deficits to food grain surpluses. Total food grain production increased from 6.5 million tonnes in 1965-66 to 18.2 million tonnes in 1985-86, showing an increase equivalent to a compound rate of 5.28 percent per year.

The livestock sub-sector plays a vital role in the economy by providing milk, meat, butter and eggs for human consumption and by-products like hides and skins, wool and hair for local commercial purposes as well as for export. In addition, it supplies farm power for soil cultivation to small farm operators using traditional methods and provides employment to a considerable labour force. It contributes 30 percent to the agriculture sector. The livestock subsector has not kept pace with crop production, where introduction of new varieties and increased use of purchased inputs has led to substantial production increase. The increases in livestock products (except poultry) over the past several years have resulted mainly from increases in livestock inventory rather than from increases in production per animal. This sub-sector has great potential for production increase.

Fisheries

Besides being a low-cost source of protein, the fisheries subsector continues to be an important source of foreign

exchange earnings. During the current year it has contributed one percent to agricultural production and 3 percent to the export earnings. Fish production has been encouraged by Government through subsidies for establishing fish ponds and also through provision of hatcheries.

Forestry

Forests provide wood for fuel and raw material for industry. Forests also affect the environment; they influence atmospheric moisture and mitigate extremes of temperature. Forests make up about 4 percent of Pakistan's area.

B - Irrigation

Pakistan has one of the largest irrigation systems in the World. It has been blessed with natural river flows which supply an extensive irrigation system. The Indus Basin irrigation system, which commands a cultivable area of 13.96 million hectares, comprises the mighty Indus and its tributries, the rivers Jhelum, Chenab, Ravi, Sutlaj and Bias. Under the Indus water treaty signed during 1960, the waters of the three eastern rivers (Bias, Sutlaj and Ravi) were handed over to India while the western rivers of Chenab, Jhelum and Indus are being totally used by Pakistan. To overcome the resulting shortage of water in the already-irrigated areas of the eastern rivers command, several reservoirs

and link canals were constructed under the same treaty. Now the Indus Basin Irrigation System comprises three major storage reservoirs (Tarbela, Mangla and Chashma) 19 barrages/head works, 12 link canals, 43 canals and some 89000 chaks (water courses). The total length of canals in the system is about 35000 miles, with water courses from channels and field ditches running another one million miles in length. About 5.5 million acres of irrigated area are located outside the Indus basin, mostly scattered in relatively small parcels with water supplies coming from open wells, tubewells, lift pumps, karazes, springs and small diversions. Generally these supplies are uncertain and vary with the season and location, affecting the crop production considerably.

Under the Indus Basin irrigation system, river water is diverted by barrages/weirs into main canals and subsequently into branches, distributories and minors. Discharge of water from distributories and minors to water courses is regulated by mogahs (outlets) within the range of one to three cusecs. This distribution of water to fields is governed by a time rotation scheme (warabandi) based on size of holdings. Areas under orchards are entitled to additional water. The operation and maintenance of the distribution system above the mogah is the responsibility of the Provincial Irrigation Departments (PID) whereas the water courses (sarkali Khals) are maintained by the farmers themselves.

Effective though it has been, the irrigation system has shown some adverse effects on the economy. Seepage from the distribution system of canals, distributories, minors and water courses, and deep percolation of irrigation water from the fields, has resulted in a gradual rising of the ground water table, which has created serious twin problems of water logging and salinity. At the beginning of this century the water table was generally over 50 feet below the surface throughout the Indus plain. However, the Indus Basin salinity survey reports that 22 percent of the Indus Basin has a water table within 6 feet of the surface and an additional 30 percent of the area has a water table within 10 feet. Better drainage is needed to solve the water logging problem and also to cope with rainstorm flooding which occurs frequently in the upper portion of the Indus Plain and in the lower reaches of the Indus Plain near the seacoast in Sind.

The water available from the canals makes up 64 percent of the total water available for irrigation, as depicted in Table 1.1. About 26 percent of the land is irrigated from other sources, primarily by tube wells and open wells, as shown in Table 1.2.

The climate in Pakistan is cold in winter and hot in summer. The temperature difference results in different cropping patterns during these periods. From May to

October is called Kharif season and November to April is Rabi season. During kharif season more irrigation water is required than in the rabi season because, due to higher temperatures, water evaporates faster and the kharif crops transpire much more water than the rabi crops. Rice, Cotton, and Maize are the major kharif crops, while Wheat is the only major crop of Rabi season. Sugarcane is raised on a year-round basis.

TABLE NO.1.1

Water Availability at Farm Gate, by Source

(Million Acre Feet)

Year	Surface Water	Ground Water		Total Water Availability
		Public Tube-wells	Private Tube-wells	
1971-71	51.99	4.48	14.63	71.10
1972-73	60.54	4.81	15.82	81.17
1973-74	57.64	5.40	17.02	80.06
1974-75	51.86	6.95	18.21	77.02
1975-76	59.42	6.16	19.43	84.95
1976-77	58.40	5.65	20.52	84.57
1977-78	61.62	6.21	21.61	89.44
1978-79	57.98	6.21	23.20	87.39
1979-80	63.14	7.03	23.97	94.14
1980-81	65.21	7.44	25.14	97.79
1981-82	64.63	8.16	26.31	98.86
1982-83	65.24	9.96	26.29	101.49
1983-84	66.47	10.20	27.02	103.69

Source : Agricultural Statistics of Pakistan 1984

Table 1.2

Area Irrigated by Province and by Source of Water 1983-84

(Area in Million hectares)

Province	Total	Canal		Tube wells	Wells	Tanks	Others
		Government	Private				
Punjab	10.91	7.80	0.01	2.74	0.25	0.06	0.05
Sind	3.07	2.56	-	0.06	0.01	-	0.44
NWFP	0.78	0.3	0.32	0.05	0.03	-	0.07
Baluchistan	0.56	0.33	0.03	0.10	0.02	-	0.08
Total	15.32	11.00	0.36	2.95	0.31	0.06	0.64

Source : Agricultural Statistics of Pakistan 1984

Controlled availability of water contributes significantly to agricultural production. Table 1.3 depicts that the yields of wheat, for example, are much higher--for Pakistan on the whole, more than twice as high--where irrigated than whan where raised without irrigation. Commercial cultivation of vegetables and orchards in Pakistan would not be possible without irrigation. And without the irrigation system it would not be possible for Pakistan to be self-sufficient in food grain production.

A final benefit of the irrigation system is its

TABLE 1.3

WHEAT YIELD AND IRRIGATION IN PAKISTAN

1970 - 71 Through 1983 - 84

(Kg/Hectare)

Years	PUNJAB		SIND		NWFP		PAKISTAN	
	1*	2**	1	2	1	2	1	2
1970 - 71	1356	360	1453	712	792	415	1330	392
1971 - 72	1466	443	1496	766	1144	415	1439	452
1972 - 73	1522	480	1531	830	1217	609	1485	526
1973 - 74	1503	489	1623	849	1291	572	1494	544
1974 - 75	1577	572	1531	821	1310	600	1549	572
1975 - 76	1688	627	1688	913	1402	618	1669	646
1976 - 77	1705	579	1719	926	1439	700	1691	639
1977 - 78	1490	621	1640	1030	1373	734	1510	675
1978 - 79	1679	844	1740	1008	1425	787	1678	824
1979 - 80	1746	924	1838	989	1606	834	1754	877
1980 - 81	1840	959	1925	1046	1728	854	1847	908
1981 - 82	1698	812	2050	1045	1730	855	1764	623
1982 - 83	1849	980	2089	1031	1768	881	1887	945
1983 - 84	1588	789	1966	986	1698	724	1670	780
Average	1622	677	1735	925	1423	686	1626	672
Difference in favour of Irrigation	+140%	--	+88%	--	+108%	--	+142%	--

* Irrigated ** Unirrigated

Source : Agricultural Statistics of Pakistan 1984.

contribution by providing electric power through hydroelectric generation. This "hydel" generation has increased manyfold during the last three decades, because operation and maintenance cost is much less than for thermal generation. Because of these economies, it is planned to establish small Hydel units on almost all the perennial canals, which will contribute to economic development and upgrading of the standard of living in rural areas.

C - The Agro-Socio-Economic Setting of the Project

Introduction

Characteristics of the 13 systems are described below, first with generalities applicable to all of the systems. Subsequantly, short descriptive statements highlight characteristics of each system.

The project area includes portions of 13 irrigation systems in the provinces of Punjab, Sind, and NWFP. In all of these areas the local economy is mainly dependent on agriculture. Portions of each system face development constraints including waterlogging, salinity, problems related to the supply of irrigation water, and provision of agricultural inputs at the proper time and in the required quantity. Shortages of inputs have become more aggravated due to inadequacy of the road network. The provision of metalled roads along the canal banks will go a long way toward relieving the transport

difficulties, with favourable effect on the productivity and the welfare of small farmers.

Local Economy

The present economy of all 13 systems depends upon agriculture. In each case, there is some supplementation of agriculture by commercial and/or industrial development in and around the project area; these supplementary developments typically take the form of sugar mills, cotton textile industries, cotton ginning factories, and urban markets for the consumption of its farm products. Such developments have provided employment opprtunities to the rural population of the project area. Due to lack of transportation facilities, the labour force generally has migrated to the urban areas rather than commuting from rural areas. This migration, in addition to depleting the agricultural economy, has created law and order problems in some urban areas.

Population

The success or failure of the development process, in retrospect, has been in the ability and determination to pursue an effective population policy. Population growth has persisted as a result of the relative success of medical and health care programs in bringing down the death rate to 11 per thousand. Meanwhile, the birth rate remains high, over 40 per thousand. The meagre efforts

made in improving social services have been lost in the avalanche of the continuing increase in population, while population growth remains a major factor, affecting the proportion of the population covered by essential amenities of life. The population of the project area cannot be determined with precision, but population characteristics of districts that are representative of the 13 irrigation systems are shown in Table 1.4. Rural population density ranges from around 60 to nearly 500 persons per square kilometer, and recent growth rate by districts varies from 1.33 percent per year to 4.70 percent.

Transport and Communication

Transport and communication systems in rural areas are generally very poorly developed, and the people face much difficulty in travelling and in transportation of their goods. The unpaved roads which link rural areas with district and tehsil headquarters and marketing centres sometimes become impassable during the rainy season. Rail facilities are lacking in most of the irrigation systems under consideration, and the railways that exist transport little freight that is of interest to agriculture. The lack of transport facilities tends to raise costs, while restricted access to markets tends to lower farm prices. Market information is not readily available, and modern technology or "know how" is not

TABLE 1.4

CURRENT RURAL POPULATION, DENSITY AND POPULATION GROWTH IN 13 SELECTED DISTRICTS

DISTRICT	Rural Population		Population Growth Rate Percent
	Number,000	Density persons per Square Km.	
PUNJAB			
JHANG	1801	202	2.67
FAISLABAD	2505	429	1.33
OKARA	1468	334	3.16
VEHARI	1366	313	2.91
SIND			
BADIN	859	149	4.59
THARPARKAR	1566	58	4.70
NAWABSHAH	1533	204	2.26
SUKKUR	852	75	1.74
DADU	1094	66	3.43
NWFP			
PESHAWAR	1734	433	3.31
D.I. KHAN	635	71	3.53
BANNU	758	173	2.70
MARDAN	1496	477	2.68

Source : Punjab Development Statistics 1985
Development Statistics, Sind, 1984
Important District-wise Socio Economic
Economic Indicators of NWFP, 1987

accessible to the majority of farm operators. The result is that the local farmer is unable to participate fully in agro - economic development. The development of transport and communication is needed for full economic development of the area.

Land Utilization

Land utilization is an important indicator in assessing the existing agricultural development and in forecasting future land and water development. It is an economic indicator of progress, and helps in appraisal of the economic welfare of the farm population. Low cropping intensity, much fallow land and frequent crop failures indicate under-utilization of land resources, and provide evidence of constraints which limit the optimum use of agricultural resources. Therefore, an inventory of existing land utilization of the project area is a pre-requisite for effective planning of available resources.

The available data on land utilization are presented in Table 1.5. A great deal of variation exists in the proportion of the Reported Area (total area of the district) that is cultivated. Cultivable waste land offers considerable potential for expansion of cropland. However, there was no opportunity in the current study to investigate the constraints on that land and what would be required to bring it into use as cultivated

TABLE 1.5

LAND UTILIZATION

(000 Hectares)

DISTRICT	REPORTED AREA	CULTIVATED AREA			CROPPED AREA		UNCULTIVATED AREA			
		TOTAL	NET SOWN	CURRENT FAWLLOW	TOTAL	AREA SOWN MORE THAN ONCE	TOTAL	CULTURABLE WASTE	FOREST	NOT AVAILABLE FOR CULTIVATION
PUNJAB										
JHANG	890	685	573	112	691	118	205	122	7	77
FAISLABAD	584	492	483	10	633	150	92	39	1	52
OKARA	439	343	321	22	476	155	95	40	2	53
VEHARI	437	375	354	21	511	157	62	18	--	44
SIND										
BADIN	649	535	263	272	275	12	114	73	4	73
THARPARKAR	2739	1167	743	424	779	36	1572	1273	3	296
NAWABSHAH	750	466	404	62	456	52	284	149	25	110
SUKKUR	1140	392	255	137	312	57	748	341	59	349
DADU	1523	383	166	216	201	35	1141	504	168	469
NWFP										
PESHAWAR	400	195	161	34	N.A	N.A	205	N.A	9	N.A
D.I. KHAN	901	301	249	52	N.A	N.A	600	N.A	50	N.A
BANNU	439	254	205	49	N.A	N.A	185	N.A	-	N.A
MARDAN	314	203	187	16	N.A	N.A	111	N.A	3	N.A

Source : Punjab Development Statistics 1985
Development Statistics, Sind, 1984
Sind Development Statistics 1985
Important District-wise Socio Economic Economic Indicators of NWFP, 1987

area. Therefore no explicit plan for expansion of cropland is included in the analysis.

Land Tenure

Land tenure is the legal relationship between the landlord or owner and the tenant or operator of the land, and it determines the division of production and the sharing of farm costs. Farm tenure systems can be broadly classified in to three types: owner-operated farms, owner-cum-tenant operated farms, and tenant operated farms. Under the first-mentioned tenure system, the peasant owner himself operates the farm. Such a farmer is usually devoted to his occupation because he is the sole owner of the farm land and its produce. This type of tenure favors efficient use of available resources and is helpful for agricultural development. Under the tenant system, the operator does not own any land; he cultivates only rented or hired land. The tenant farmer faces many constraints in development as he has to depend upon others for many of the decisions which affect his productivity. The result is likely to be low yields and low farm income.

The owner-cum-tenant system is a combination of the other two systems. The cultivator owns part of the land that he farms, but he tills additional land on a share-cropping or cash-rent basis for full employment of his available resources of manual and bullock labour. This

tenurial system is intermediate in efficiency of use of resources and in favouring agricultural development.

Farmers operating under share cropping or annual cash rent contracts face the risk of dispossession because their right to farm the land may be terminated at the pleasure of the owner. Cultivators with this kind of insecure future are likely to avoid the introduction of permanent improvement programmes, especially if these programmes require investment, and therefore, they obtain less than optimum production with a given set of resources. This system is not so useful in developing projects, as the needed combination of resources often cannot be arranged by the tenants. Under the land rental system in the Punjab, the tenants provide bullocks and manual labour along with 50 percent of the input costs, and they receive 50 percent of the produce.

In Pakistan, more than half of the farms (55%) are owner operated (Table 1.6). Of the remaining farms, more are tenants than owner-cum-tenants. However the mixed-tenure farms are larger than the tenant farms. Owner-cum-tenants make up only 19 percent of the farms but they have 26 percent of the farm area, while the 26 percent of farms that are tenant-operated have only 22 percent of the farm area.

Table 1.6

Number and Area of Private Farms, by Tenure, 1980

Tenure Class	Farms: Number (Million)	Farms: Percent	Farm Area: Hectares (Million)	Farm Area: Percent	Farm Area: Average size (hectares)
Owner Cultivators	2.23	55	9.93	52	4.45
Owner-Cum-Tenants	0.79	19	5.02	26	6.35
Tenants	1.05	26	4.11	22	3.91
Total	4.07	100	19.06	100	4.68

Source : Agricultural Statistics of Pakistan, 1984

Farm Size and Fragmentation

Farm size varies in Pakistan, but most of the farms are of relatively small size (Table 1.7). Thirty four percent have less than two hectares, and three-fourths (74%) are under 5 hectares in size. However the farms under 2 hectares have only 7 percent of the total farm area, and even when combined with the farms having up to 5 ha, they have only about one-third of farm area and cultivated area.

The large sized farms, i.e. those above 10 hectares, are only 9 percent of the number of farms, but they hold 41

percent of the total area and 36 percent of the cultivated area. These large farms tend to utilize the available resources to the optimum level, whether or not they have easy access to the markets and information bases.

TABLE NO.1.7

Number and Area of Private Farms, by Size, 1980

Size of Farms (ha)	Farms: Number (Million)	Farms: Percent	Farm Area: Hectares (Million)	Farm Area: Percent	Cultivated Area: Total (hectares)	Cultivated Area: Percent
Under 2.0	1.39	34	1.35	7	1.23	8
2.0 to Under 5.0	1.60	40	5.20	27	4.79	30
5.0 to Under 10.0	0.71	17	4.70	25	4.12	26
10.0 and above	0.37	9	7.81	41	5.73	36
Total	4.07	100	19.06	100	15.8	100

Source : Agricultural Statistics of Pakistan, 1984

Another problem related to size of farm is the subdivision of farms into progressively smaller parcels, due either to the law of inheritance or to the sale process. Whatever the reason may be, it is a great drawback in increasing production. A substantial fraction of Pakistani farms are fragmented. Many of them have several parcels, which would require consolidation to achieve optimal efficiency and economical operation.

Social Services

The people who make up the agricultural labour force of Pakistan have a low average level of formal education. A survey conducted by WAPDA's Survey and Research Organization (Monitoring and Evaluation of On-Farm Water Management Programme, 1981) found 69 percent of the farm operators to be illiterate; further, 18 percent had only attended primary school. The 1979 household income and expenditure survey conducted by GOP Ministry of Interior recorded that 84 percent of the rural population over 10 years of age was illiterate.

Although formal education is not necessary for farming, illiteracy is a major handicap in the development process. Ideally, education facilities should be provided at the door step. The present Government has planned for compulsory education up to primary standard, but still there is a lot to be done before all parents will be able to send their children to school.

Health facilities in the project area are provided by the Provincial Governments. In general, they are insufficient in number and are widely scattered. Primary health centers (the basic health care units) are few in number, and they are generally without qualified doctors. Medicines and modern equipment are also lacking in those health centers. The health-care situation needs improvement.

Pricing Policy

In Pakistan's agrarian economy, more than 70 percent of the population reside in the rural areas and depends directly or indirectly on agriculture for its livelihood. To protect the interests of the producers/farmers, government has established some organisations like the Agricultural Marketing and Storage Ltd (AMSL) and Pakistan Agricultural Storages and Services Corporation (PASSCO) to purchase agricultural produce at local procurement centers, and the Pakistan Agricultural Prices Commission to revise support/procurement prices, keeping them in line with farm costs. The Government has established support prices for the major crops since 1970-71 as shown in Table 1.8.

Characteristics of the Individual Study Areas

Brief descriptive comments on each of the project areas follow, calling attention to unique or outstanding attributes of the 13 systems that make it desirable to analyze the systems individually.

Jhang and Gogera Systems lie in Faisalabad, Jhang and T.T.Singh Districts of Punjab Province. The two systems lie side by side and are similar in many respacts. In common with the other systems, the economy of the area is dependent upon agriculture. The city of Faisalabad is located in between the two systems near the river

Table 1.8

Procurement/Support Prices of Agricultural Commodities

(Rs. per Maund of 40 Kg)

YEARS	Wheat	Rice		Paddy		Sugar Cane			Seed Cotton				Potato	Onion
		Basmati F.A.Q.	Erri-6 F.A.Q.	Basmati	Erri-6	N.W.F.P	Punjab	Sind	Desi	AC134 NT	B.557 F149	Delta Pine		
1970 - 71	18.22	34.30	22.40			2.41	2.95	3.11						
1971 - 72	18.22	40.70	22.40			2.41	2.70	2.84						
1972 - 73	24.11	51.30	22.40			4.29	4.55	4.72						
1973 - 74	27.33	66.45	28.94			4.29	4.55	4.72						
1974 - 75	39.65	96.45	42.87			5.37	5.63	5.79						
1975 - 76	39.65	96.45	42.87	47.80	26.79	5.89	6.16	6.32						
1976 - 77	39.65	108.80	57.97	55.73	32.15	5.89	6.16	6.32	128.60	133.96	144.68	155.40	26.50	19.30
1977 - 78	39.65	108.80	[illegible]	59.48	32.15	5.89	6.16	6.32	141.46	147.89	159.68	171.47	26.80	19.30
1978 - 79	48.23	117.89	52.51	64.30	32.15	5.89	6.16	6.32	143.61	147.89	159.68	171.47	26.80	19.30
1979 - 80	58.00	117.89	52.57	64.30	32.15	7.23	7.50	7.66	143.61	147.89	159.68	171.47	26.80	19.30
1980 - 81	58.00	137.00	63.00	75.00	38.58	9.38	9.65	9.81	156.00	160.00	171.00	182.00	26.80	19.30
1981 - 82	58.00	150.00	72.50	85.00	45.00	9.38	9.65	9.81	166.00	170.00	178.00	192.00	26.80	19.30
1982 - 83	64.00	154.00	80.00	80.00	49.00	9.38	9.65	9.81	168.00	175.00	183.00	197.00	40.50	25.00
1983 - 84	64.00	157.00	83.00	90.00	51.00	9.38	9.65	9.81	169.50	178.00	186.00	200.00	40.50	30.00
1984 - 85	70.00	160.00	83.00	93.00	51.00	9.38	9.65	9.81	169.50	181.00	189.00	203.00	40.50	30.00
1985 - 86	80.00	166.00	86.00	96.00	53.00	9.38	9.65	9.81	173.50	185.00	193.00	207.00	40.50	30.00

SOURCE :Economic Survey of Pakistan 1985-86

Chenab, while the headquarters of T.T. Singh district is located within the Jhang system. Urbanization is having a major impact in this area. This urban development is closely related to the development, after independance in 1947, of agrobased industries. Locally, industries in the fields of fertilizer, cotton textiles and edible oils have shown a rapid increase.

Both these systems lie between two rivers, Ravi on the east and Chenab on the west. Irrigation water is supplied to the project area by Jhang branch, Gogera branch and Brala branch. This area has a good irrigation system, but the land is presently badly affected by the twin problems of water logging and salinity. Several Salinity Control and Reclamation Projects (SCARPS) are being implemented to reclaim the area. The people are generally hardworking but their holdings are of small size.

Depalpur Canal System is located in the Depalpur tehsil of Okara district and in Chunian and Kasur tehsils of Kasur district; the area lies adjacent to the Indian border. The cropping pattern varies from that of the earlier mentioned systems; the farmers are commercially-oriented and grow more vegetables and cash crops and they earn higher farm incomes by selling their produce in the densely populated centre of Lahore. The problems of water logging and salinity exist in this system; these problems are being tackled by the Government.

Mailsi Canal System is located in the Lodhran and Mailsi tehsils of Multan and Vehari districts respectively. It differs from other systems in having the largest average size of farm in the irrigated areas of Punjab. Most of the farmers are progressive and tend to specialize, growing cotton as their only important crop in kharif, while wheat is grown everywhere in rabi season. Almost half of the cotton production of Punjab is contributed by Vehari district, and a major portion of that is grown in this system.

Nasir Branch System is located in the Matli and Tando Bago tehsils or talukas of Badin district in Sind province. Its economy is heavily dependent on cultivation of sugarcane, which covers about 60 percent of the area under major crops. The importance of sugar production can easily be visualized by the number of sugar mills: six sugar mills out of 13 in the province are located in Badin district, and three of these mills are in the project area. In the future, the economy of the area may take a turn towards industrialization, as four wells of crude oil have been brought into production and their output is increasing day by day. A more versatile road network will be required for quick and economical disposal of the product (oil) to the upland areas of the country.

Jamrao - Mithrao Canal System Both these canals are

branches of Nara Canal taking off in the Sanghar district. The major portion of the impacted area is located in the Mirpur Khas district covering Kot Ghulam Muhammad, Digri and Samaro Talukas leaving aside the deserted area of Tharparkar in the taluka Umerkot. The major crop of the area is cotton, which accounts for about 42 percent of the area under major crops. The construction of proposed road No.8 in this system will also serve as a by-pass for the city of Mirpur Khas. The soil is fertile but water is deficient compared to crop water requirements, affecting the production. The people are hardworking, and the land and labour has great potential for development.

Ghotki Feeder Ghotki canal offtakes from the mighty Indus at Gudu Barrage and serves the area of talukas of Ubouro, Ghotki and Panoakil in the district of Sukkur. Like Jamrao-Mithrao, it is a cotton growing area ; that crop covers 42 percent of the area under major crops. The main railway track runs throughout its valley, as does the national highway leading from Karachi to Peshawar.

Rohri Canal System provides the irrigation facility to almost all of the cultivated area of Nawabshah district. The impacted area of this project will however be centralized in the talukas of Kandiaro, Moro and N.S. Feroze. It is also a cotton growing area. It is the centre of the interior Sind where the sociological

phenomenon of Hariasm is evident. Haris are tenants who operate very small farms under share-cropping terms that keep them perpetually indebted to the landlords, restricting the horizontal or vertical movement necessary for their economic development. The main railway passes through the length of Rohri system from Nawabshah to Hyderabad, side by side with the G.T.road leading from Lahore to Karachi.

Dadu Canal System has its command in Dadu district of Sind. In the economy of this area, the contribution of Rice is particularily important. The area has religious significance due to the tomb of "Lal Shahbaz Kalandar" at Sehwan the taluka headquarters of Dadu. Manchar Lake, the nation's biggest natural lake, is located within the system.

Kabul River Canal System is composed of Kabul River canal and gravity flow canal both off taking from Warsak Dam on the Kabul River. Kabul River canal crosses the G.T. Road near Peshawar and serves the project area along the G.T. Road between the gravity flow canal and G.T.Road. The project area is located in Nowshera and Peshawar tehsils of Peshawar district. Pabbi, located close to the project area, is the marketing center for some of the farm produce and is the source of farm inputs. G.T. Road passes parallel to the project area, but links with that road are lacking. The major crops of

the area are wheat in Rabi and sugarcane and maize in Kharif; these crops cover 48, 28, and 24 percent respectively of the area under major crops.

Paharpur Canal commands the area in D.I. Khan district. The canal formerly arose at Chashma, taking water from Indus river. But with the construction of Chashma Right Bank Canal (CRBC), now partially completed and off taking from the same point at Chashma, the command area of Paharpur Canal will be served by CRBC through links. People of the area have been facing difficulty in getting even drinking water, and are forced to drink from ponds open to animals. In the future, with full operation of CRBC, it is expected that the water problems will be solved. The area has great potential; crop yields in the future will show a great increase, and the per capita income will increase considerably.

Marwat Canal System is located in Bannu district in North West Frontier Province. The main constraint in agriculture development in this area is the water deficiency; irrigation is possible for only 32 percent of the cultivated area. The size of farm is generally very small. Maize is the major crop in the Kharif season; sugarcane is next in terms of area. Tribal agencies, having their own rules and traditions, are functioning in the area. Settlements are less well developed than elswhere in Pakistan, and land consolidation is not applicable. The importance of the

tribal agencies may have a negative impact on project implementation in this region.

Upper Swat Canal System commands area of 147196 acres in Mardan and Swabi Tehsils of Mardan district and Nowshera Tehsil of Peshawar district. The impacted area lies within Mardan districts and Nalakand agency. The size of farm is generally very small, and the cropping intensity is the highest in Pakistan.

1.2.2 Project History

Many studies between 1973 and 1979 analysed the problem of the deterioration of the irrigation and drainage systems of Pakistan. Each made recommendations for the rehabilitation of the canals. One of the more significant studies was the 1979 NRTC Planning Commission report No.35 "Canal Roads for Public Use (feasibility study)". This report, in conjunction with the other reports on canal rehabilitation, studied in particular the need for improved (road) communication between farm, market, and population centres.

The improvement of the canals was intended to provide more equitable and predictable distribution of water particularly in the canal tails. It was also proposed concurrent with the canal rehabilitation that the drainage systems would be cleaned and desilted reducing the risk of flooding and over watering of the cultivated

areas. The improved irrigation and drainage would improve crop quality and yield and open new areas to intensified cultivation.

With more marketable crops being produced and rural population increasing in new areas the 1979 report concluded that the rural infrastructure must be expanded rapidly.

Previous reports had suggested that the canal embankments and inspection paths would, with minor upgrading, make acceptable communication links. The Provincial Irrigation Departments (PIDs) however were not in agreement with the recommendations at the time and continued to restrict public access citing a variety of concerns related to the operation and maintenance of the canals.

The 1979 report and several subsequent reports between 1979 and 1985 by outside agencies (USAID,World Bank) addressed the concerns of the PIDs and eventually convinced the Provinces that the benefits of converting the canal and drain roads to public use outweighed the potential dangers.

The first phase of the irrigation system rehabilitation was begun in 1982 but without a provision for canal road improvement. Phase I was originally scheduled to be a 3 year programme to rehabilitate only those canals and drains that were in critical stage of deterioration.

The programme has been extended twice and is now expected to be completed in June of 1987.

The Pakistan irrigation system is over 35800 miles in length and serves 34.5 M. acres, about 75% of the total crop area, representing 90% of the total agriculture production. On completion, ISRP I will have rehabilitated approximately 30% of the irrigation network. Progressive evaluation of the beneficial elements of Phase I indicated the desirability of proceeding with a Phase II.

An ISRP II, now in the advanced planning stage, has identified and proposed 4970 Mi. of irrigation canals and 680 Mi. of drains for improvement in a 5 year programme starting in 1988. The perceived benefits of Phase I extrapolated through Phase II and adjusted to accommodate the anticipated shift in cropping and population have again renewed the interest in developing canal and drain roads for public use.

This report will endeavour to identify canal and drain roads within specific irrigation systems in Punjab, Sind and NWFP that may be justified economically and upgraded for public use.

1.3 TERMS OF REFERENCE

1.3.1 Aims of the Canal Road Study

The impact of the rehabilitated canal systems on the agriculture and population has emphasised the need for an expanded integrated road network. The Federal Ministry and GO Province Ministries of Communications and Works (MCW) have already initiated an aggressive upgrading and expansion of the existing road system. The Consultants estimate that at the end of 1986 the shortage in the rural road sector was 248600 mi. (Table 2.1). This is slightly less than the 271200 mi. estimated in 1979 that was considered necessary to meet the Planning Commission optimum of 1 mi. of road per square mile of cultivated area (NTRC No.35-1979).

This study will attempt to affirm the recommendations of previous studies that it is feasible and economical to develop a canal and drain roads network that will augment the existing and planned road programmes. Roads will be selected according to GOP and ADB accepted criteria and for those that are justified economically the study will establish development and operating costs, a budget, and an implementation schedule.

1.3.2 Scope of Work

Under the direction of the ISM Project Officer, USAID/P, the Consultants were required to accomplish the tasks noted below:

a. Assess the transportation needs in areas to be covered by each of the irrigation and drainage systems to be rehabilitated during ISR-Phase II. Identify the canal inspection paths which should be upgraded to "roads status", as well as any roads required to link these roads to the existing road network.

b. Develop general specifications and cross sections for various conditions.

c. Complete an economic analysis of upgrading these roads, considering the costs of planned rehabilitation work as well as benefits which will accrue to users and benefits related to PID O&M activities.

e. Prepare detailed construction specifications and cross sections for various conditions. These should include sodding and/or other means of insuring that road surfaces do not deteriorate too rapidly.

f. Complete other work as directed at the time of appraisal.

From time to time additional guidelines were issued to assist the Consultants in their work. Some of the more important were :

a. The canal systems to be included in the study for Punjab will be Jhang Branch, Gogera Branch, Mailsi Canal, and Depalpur Canal. The

inspection paths for all channels within these systems should be considered for upgrading. (USAID, letter 30.12.86).

b. All PIDs desire to take the responsibility for implementation of the road improvement activities and subsequent O&M (USAID letter 19.03.87).

c. Technical assistance needs should be addressed only as related to day-to-day quality control of construction. The need for expatriate advisors need not be addressed. (USAID letter, 19.03.87).

d. ISRP-II and CRP are scheduled to commence from July 01, 1988 and the duration of the project will be 5 years (USG memo 28.03.87).

e. Exclude the investment cost / depreciation in applying the rental rate..... because the equipment is supplied by USAID under a commodity Grant at no cost to Pakistan. (USG memo 28.02.87).

f. Local consultants are considered necessary to ensure the quality and quantity of works. (USG memo 31.03.87).

1.3.3 Project Elements:

The following project elements are essential to the achievement of the scope of work :

a. Collect, collate and analyse pertinent systems

data from various GO Provinces PID, MCW and other agencies.

b. Discuss project data with USAID and GO Province departments.

c. Field trips to typical irrigation and drainage systems to get the "feel" of site conditions.

d. Develop composite system maps and data tables.

e. Establish road selection criteria and benefits criteria.

f. Select roads that meet criteria (e) and justify by economic analysis.

g. Develop general / cross sections and design specifications.

h. Compute construction and road operating and maintenance costs.

i. Establish equipment requirements.

j. Develop budget.

1.3.4 Objectives of the Canal Roads Study

The basic objectives of the study are to:

a. Verify (or not) that specific embankment roads within identified irrigation and drainage systems can be economically developed for public use.

b. Assure that the benefits accruing from this upgrading will have the broadest possible impact supporting and strengthening:

i) The agricultural sector.

ii) The rural population.

iii) The development of quality contractors.

iv) The staff and administration of the PID.

1.3.5 Constraints

The compressed time frame in which to complete the study was the major constraint. The original term for the CRP feasibilty study was 6 months. Due to the late award of the contract (03.03.87) and foreshortening of the study submission date from 15.06 to 15.05 the actual time available for field work for the engineers and economists was reduced from the planned three months to one month.

There was too, some uncertainty within the Punjab and Sind PIDs about the canal systems to be studied. Although USAID indentified the Punjab areas 30.12.86 it was not until 14.01.87 that USAID and Sind PID reached agreement on the system study areas. Obviously this put MAAA under considerable pressure to complete the work in Sind in the time remaining.

The Consultants relied on data supplied by many sources including system and district maps supplied by the PIDs and DOHs. It soon became evident however that there are no highway, irrigation or drainage maps available in Pakistan that are complete, accurate or current. The maps accompanying this study are composites made by plotting highway and road information from several

official departments and agencies, irrigation data from several sources within the PIDs, and drainage data from still other sources. Much of the data supplied was found to be in error and, within the study systems, was corrected by MAAA based on field observation. Collating and plotting the correct data took much of the engineers time and to some degree impeded the economists research.

Some minor delays were caused by the February curfew in Hyderabad and unusually heavy March rains in NWFP which delayed the completion of the surveys and compaction tests.

1.4 Consultants

1.4.1 Consultants Team

The members of the Consultants Team are listed in App.1.1.

1.4.2 Activities of the Consultants

A diary of Principal meetings and contacts over the life of the project is detailed in App. 1.2.

1.5 Conclusions and Recommendations

1.5.1 Conclusions

The economic analysis of the construction of roads on the banks of selected canals and drains in 13 irrigation systems in 3 Provinces of Pakistan resulted in the following conclusions :

a. The 13 systems vary in many respects - crops, yields, intensity of land use, density of population etc.

b. In all 13 systems deficiencies in road networks constitute serious constraints to agricultural development.

c. Direct and quantifiable benefits of the improved road network include :

   i. increased agriculture production (the largest benefit).

   ii. reduced cost of hauling agriculture produce, by reduction of distance hauled off-road or on katcha tracks,

   iii. reduction of costs of canal maintenance,

   iv. major reduction of costs of vehicle operation (the second largest benefit).

   v. savings of time.

d. The combined value of the direct benefits, expressed as Net Present Worth, exceeds the present worth of the investment and recurring costs of the CRP.

e. Savings in vehicle operating costs, are independent of the road's impact on agriculture, and indicate benefits to a broad spectrum of the population.

f. Eleven of the 13 individual systems and all of the aggregations of systems at provincial and at national levels show a Benefit-Cost ratio greater than unity.

g. Internal Rate of Return is greater than the opportunity cost of capital for 11 of the 13 systems, denoting the feasibility of those systems.

h. Variation in IRR of the 13 systems supports prioritizing the construction by systems, and deferring or withholding funding of those systems of least feasibility.

i. Feasibility of the project is strong, and is not lost even if costs and benefits are modified adversely by 10 percent, or if completion of construction is deferred until the eighth year, or only 15 years are allowed for benefits to accrue. In each of these cases, the project's IRR remains above 15 percent.

j. Financial analysis shows that the direct beneficiaries of the project could repay all of the project costs over 25 years, including interest at 12 percent, and the payments would in all cases be less than the benefits received.

k. The PIDs have agreed with the Consultants selection

of routes and general design and wish to be responsible for the construction and O and M of the roads to DOH specifications.

l. There is a lack of administrative and technical support within the PIDs to undertake the CRP concurrent with ISRP II and complete both projects within 5 years. Retention of a competent local consulting engineering firm to assist and supervise design, construction, and compliance with the specifications will be essential.

m. The PIDs do not have sufficient equipment or support facilities to execute the works without contracting the work out. Very little, if any, equipment will be available from the DOH's.

n. Some competent private contractors have sufficient equipment of their own to undertake this type of construction but have stated they would be interested only in large contracts. There is sufficient other construction activity that the CRP project must be made attractive to them.

o. Every contractor will have to buy compactors, graders, and bitumen equipment unless it is made available for rent locally. None of the proper size and type are currently available in Pakistan.

p. Contractors may require financial assistance to purchase equipment or spare parts to bring some of their equipment into service.

q. The present level of funding and the policies

relating to O and M are out of date and require revision.

r. The rental rates and unit prices used by the PIDs /DOHs are out of date and require revision.

1.5.2 Recommendations

The Consultants recommended that :

a. The proposed roads in 11 of the 13 systems indentified in this report should be funded and built concurrent with the canal/drain rehabilitation ISRP-II.

b. If the project must be reduced in scope or funded in stages, the ranking of the individual systems in economic analysis and not the ranking of the provincial aggregations should be the basis for determining inclusion or exclusion or for prioritizing.

c. The roads conform to DOH specifications and have a 12' metalled surface.

d. An independent local consulting engineering firm must be retained to supervise, coordinate and assist the implementing agencies on a daily basis in the design, construction and acceptance of the works associated with the CRP.

e. New equipment necessary for the CRP be supplied under a commodity grant.

f. The GOP waive duties and taxes on equipment and parts imported for use on the CRP.

g. The equipment management systems of all GO Provinces departments should be restructured and standardized with the objective of becoming self-sustaining in five years.

h. The rental rates used by the PIDs/DOHs must be brought current by 31.12.87. Consideration should be given to acknowledging depreciation and investment costs (g. above).

i. The unit prices paid by the PIDs/DOHs must be brought current by 31.12.87.

j. The PID equipment servicing facilities, as against workshops and machine shops, be assessed and upgraded so they will have the capability of servicing and maintaining the newer technology equipment.

k. A standard level of construction for all new road embankments should be established to ensure that the basic road formation will support the maximum future traffic flow estimated for the area.

l. A standard higher level of annual road maintenance and funding must be guaranteed by the GO Province for road programmes assisted by foreign exchange.

2. REVIEW OF RELATED STUDY/PROJECT

2.1 Review of "Canal Roads for Public Use (Feasibility Study)"

- National Transport Research Centre-No.35
  July, 1979

The "1979 report" identified a total national road deficiency of 434000 miles based on an (GOP Planning Commission) optimum infrastructure of 1 mi. road per square mile of land area. The report went on to calculate the ideal road development needs based on generally accepted standards and although all sectors showed a road deficiency when compared to the calculated optimum, most of the need and most of the deficiency, was in the Rural Roads sector, 271000 miles.

The 1979 Rural Roads requirements, as shown in the 1979 report, are reproduced in Table 2.1. The needs are brought up to data using statisics for 1984 supplied by the Department of Highways and modified by the Consultants to reflect construction believed to have taken place since 1984.

Although considerable construction and road rehabilitation was done by the Department of Highways(DOH) between 1979 and 1986 efforts were directed primarily at the urban areas. A restricted budget, shortage of modern equipment, and a lack of skilled labour contributed to the DOHs inability to undertake a more aggressive rural road development programme.

TABLE 2.1

1986 Rural Road Network

LOCAL RURAL ROADS DEFICIENCY

(In miles)

ITEM	NON PAVED	PAVED SINGLE LANE	PAVED TWO OR MORE	TOTAL
OPTIMUM	271200	14800	9900	295900
EXISTING	18600	6200	-	24800
DEFICIENCY '79	252600	8600	9900	271100
RECENT CONST. ESTIMATED	4000	2500	1600	8100
DEFICIENCY '86	248600	6100	8300	263000

Source : NTRC Planning Commission
GOP Transport Statistics 1984.
Consultants Estimate.

Frustrated in the past because of a lack of rural transportation routes, the public today continues to demand public access to the canal inspection paths. Indeed, despite the fact that use of these paths by the public is still technically illegal, trespassing is so widespread that the PIDs have virtually stopped trying to control it.

There is nearly 34800 mi of canals throughout Pakistan. Each canal usually has an inspection path along the top

of the left bank that at the time of construction, was 20 ft wide. It has been suggested that, if developed for public transportation, the inspection paths in the canal network could provide an economical and relatively simple solution, or partial solution, to the road network deficiency.

In the past a number of efforts were made to open the canal roads to meet the growing need and demand for better communications in the rural areas. The efforts dissipated mainly because it was already possible to use the katcha canal roads to provide road communications especially in the rural areas of Punjab and Sind.

In 1971, GOP Planning Division appointed four teams of local consultants, one for each province, to carry out a Farm to Market Road Study in ten selected districts covering all four Provinces. These districts represented a fair sample of topographical, climatic, industrial, agricultural and mineral aspects in the country. The consultants for NWFP and Sind had expressed their views on the feasibilities of paving of canal inspection roads network. The comments by the consultants appointed for Mardan district in NWFP are summed up below:

a) The Irrigation Department has a network of metalled and unmetalled roads running parallel to the canals which were constructed for canal inspections and

maintenance only and are not open to public use. Because of extensive development of agriculture in the district the agricultural activity has increased manifold requiring more roads of good quality to facilitate the movement of agriculture produce and agriculture inputs. The consultants, therefore, strongly recommended to improve and upgrade all the unmetalled canal patrol roads and open them to the public.

b) All Canal Patrol Roads are connected to the village roads and the major and minor district roads leading to markets. As such their inclusion in the network of Farm-to-Market Roads will facilitate and remove to a great extent the deficiency of the Farm-to-MarketRoads.

c) Almost all Canal Patrol Roads generally pass through highly cultivated areas and densely populated villages where agricultural activities are at their peak. Most important villages are located near and along the Canal Patrol Roads.

d) Areas all along the Canal Patrol Roads have achieved comparatively higher intensity of irrigation and as such these areas are the main centres of agriculture produce and have a higher use of agriculture inputs. Their transportation needs are thus higher and must be given higher priority.

e) All Canal Patrol Roads can be easily up-graded at

minimum costs to the desired standards with the least formalities and dislocation. New construction on different alignments is time consuming and problematic in such highly cultivated areas.

f) No extra cost is involved in land acquisition in almost all cases. The land is extremely costly and difficult to acquire, if not impossible, due to dense cultivation and high land prices.

- The consultants for Larkana and Sanghar districts in Sind had made the following recommendations :-

" We still feel that upgrading of canal inspection paths to black top roads with improvement of width of the embankment where necessary is an ideal arrangement and this has been substantially proved and established in case of such canal inspection paths already up-graded on the Upper Jhelum Canal (Mangla Rasul) and Upper Bari Doab Canal (Lahore Branch) within Lahore Town. The cost indications provided should be enough to allay any fears expressed by the Government of Sind."

When the suggestion of opening the canal inspection paths was first put to the PIDs the idea was rejected, particularly by the Provinces of Punjab and Sind. Understandably the first priority of the PIDs was the constant and economic flow of water to the agricultural areas. Any threat to the efficient operation, structural itegrity, or future development of the system, or any

prospect of increased maintenance or liability was viewed with alarm. Since the 1979 report was written, however, several reports and public roads built along canal banks have proven that many of the concerns expressed by the PID staff did not in fact materialize.

Although reports by outside agencies (USAID, ADB) helped to convince all the Provinces that the benefits of allowing public use of the canal roads outweighed the management and operational risks, some problems still remain unsolved. Two of the major areas of concern were and are :

1) Who will pay for the cost of construction? and
2) Who will pay the cost of road maintenance?

It was pointed out by the PIDs in the earlier report that the construction costs for the canal roads would very likely be excessive compared to "normal" road construction because: there were many structures to be built, rehabilitated or extended before a suitable road could be built and the canals, because they followed the contours of the land, were not necessarily the shortest distance between two points and therefore more expensive to build per mile versus a straight road. While superficial estimates of costs were given in the report for several canal roads, there was no attempt to quantify or economically justify any of the proposals relative to whole irrigation systems.

To be acceptable any development programme to convert the canal roads to public use must meet social and economic criteria as well as the design and construction specifications that satisfy the needs of the PIDs and the long term objectives of the DOHs. In the Provinces of Punjab, Sind, and NWFP both parties have, since 1979, agreed that the development of the roads is desirable, and that the roads will be built to DOH specifications.

This agreement is in itself a major milestone since the writing of the 1979 report. Still to be reconciled however are the questions of financial cost sharing of construction and operating and maintenance. The PIDs are unanimous in their opinion that the construction and maintenance costs of the roads should come from other sectors and definitely not from water related revenues. On the other hand the PIDs agree that some benefits will accrue to them from the improvement of the roads and that canal bank maintenance costs will be lower. It is reasonable, therefore, that they should share in the cost of road maintenance.

All GO Province Ministries agree that the canal roads, if reconstructed for use by the public, should be metalled. The cost of metalling will raise the cost of the road about 25% over that of a shingle road but the metalled surface will provide direct and indirect social and agricultural benefits off-setting the higher cost

and in addition will have a much longer life and substantially reduced maintenance costs. The smoother surface will cut vehicle operating and maintenance costs an estimated 30% or more.

The construction programme evolving from the analyses incorporated in this report takes into account not only the concerns expressed in the previous reports by the PIDs and DOHs but also some of the weaknesses that developed in the implementation of the ISR Phase I.

2.2 Review of ISR Project - Phase I

DISCUSSION

The Pakistan canal system dates back to the mid nineteenth century and has, over time, deteriorated, principally because sufficient funds have not been available for regular preventive maintenance. Although the deterioration was recognized for many years, it was not until after 1980 that the PIDs priorized channels in "SOS" condition and a rehabilitation programme was designed. In 1981 IDA and USAID assisted GOP in the implementation of an accelerated maintenance programme to rehabilitate the canals that were in critical need of repair. The programme concentrated on specific portions of channels needing emergency repair rather than attempting to rehabilitate complete systems. Phase-I did not address the transportation problems in areas where canals were scheduled for repair consequently the oppor-

tunity to reconstruct the canal roads for public use was once again deferred.

The work on many of the canals proposed in Phase-1 has not been completed, and in some cases has not started despite two extensions to the original three year programme. Table 2.2 summarizes the number of contracts awarded and the number and percentage completed by each Province to October 1986.

TABLE 2.2

PHASE I PERFORMANCE OF CONTRACTORS

	PUNJAB	SIND	NWFP	BALUCHISTAN	TOTAL
CONTRACTS AWARDED	407	331	104	24	866
CONTRACTS COMPLETED TO 10.86	81	189	65	12	347
PERCENT COMPLETED	20	57	62	50	40

SOURCE: NESPAK Table 3.5

The poor performance in the field stems largely from GO Province admininstrative failure to fulfill their responsibilities within the planning time frame and from their method and practice of awarding contracts. Although conceptualized in 1981 contractual agreement in principle between the parties was not reached until March, 1982, and the various schemes, reimbursement

procedures, and inspection procedures were not finalized until August, 1983.

The PID tendering and contract award procedures were not altered to reflect the size of the schemes to be completed in Phase 1. Rather, the scheme once approved was arbitrarily broken into components that could be awarded within the reponsibility level from the Chief Engineer down. The authority for awarding contracts at the time was :

Chief Engineer	:	More than Rs.5 M
Supt. Engineer	:	up to Rs.5 M
Executive Engineer	:	up to Rs.1 M

Source : NESPAK

Without experience in administering large contracts, the PIDs awarded contracts as they would have awarded annual maintenance contracts, in small packages capable of being handled by local "contractors". Thus the award and control for the majority of contracts fell within the authority level of the Executive Engineer. Table 2.3 summarizes the contracts awarded and completed to 10.86 by responsibility level in each Province.

TABLE 2.3

CONTRACTS AWARDED / COMPLETED BY RESPONSIBILITY LEVEL

	PUNJAB	SIND	NWFP	BALUCHISTAN	TOTAL
Chief Enginner more than Rs.5 M	2/0	-	-	1/1	3/1
Supt. Engineer up to Rs.5 M	28/1	31/18	5/3	5/2	69/24
Exec. Engineer up to Rs.1 M	377/80	300/171	99/62	18/9	794/322

Source : NESPAK Table 3.5

The PID tender/award system as it was and is still structured is not conducive to developing a more competent administration or contractor. The pre-qualifications required of a potential bidder are so demanding regarding sureties and previous experience that many would-be contractors are not considered qualified by the PIDs. Thus work tends to go to the same contractors time after time and individuals who might develop into competent contractors have not had the opportunity to do so. Also lost are the new jobs that they, as new contractors, might create for other individuals.

The actual construction involved in the ISRP I schemes was fairly straight forward and did not employ techniques that could not be handled with the limited

skills available at the local level. With the exception of the desilting of the drains which used mechanical methods earthmoving was done using traditional methods of hand labour, tractor trolleys, bullocks and donkeys.

During the start-up period the quality of work in most areas was fair to good and improved as the Project progressed. At times however, when the volume of work increased, the quality seemed to fall proportionately to the rate of work increase. This was due partly to the inexperience of the contractors also to a shortage of supervisory and inspection staff. The PID staff was not increased sufficiently to handle the extra workload of the Phase I contracts. The supervisors and inspectors were required to perform their normal duties and, in addition administer the Phase I contracts. With this dual responsibility the time devoted to quality control of Phase I was less than it should have been.

A major problem arose attempting to convey the concept and need for compaction in the canal banks to PID administrations and the contractors. It is one that is still not readily accepted in some echelons of the PIDs. The contracts awarded for Phase I were quite explicit regarding compaction standards, yet lack of uniform compaction was the largest single cause for the rejection of the work by the inspectors. It is indicative that further instruction in the principles and benefits of compaction is still required. Most other

localized administrative and construction difficulties were corrected promptly at a low supervisory level.

The strengths and weaknesses of the Phase-I project have been noted by the Consultants for the Canal Roads Project (CRP) and the recommendations try to incorporate safeguards and suggestions that will, hopefully, improve the performance of the supervisory staff, the contractor, and the overall quality of the CRP.

3. DEPARTMENT OF HIGHWAY

3.1 Existing Road Networks

The road maps which were received from the Provincial Highway Departments indicated all National and Provincial Highways including all other metalled roads such as District Council roads and roads built under Sugar Cess Programmes etc.

3.2 Proposed Expansion Concurrent with ISR - Phase II

The expansion of provincial roads is planned from year to year under the annual development programme. The new roads included in 86-87 ADP were in-corporated in the road maps.

3.3 Farm to Market Roads.

The roads already built under the Farm to Market Road programme and those planned to be built in the near future were also marked on the road maps with the help and assistance of the Highway Department.

The Farm to Market roads to be built with the assistance of Asian Development Bank were also incorporated.

3.4 MNA and MPA Roads

The roads being built under the MNA and MPA schemes including those being built under the Chief Minister Directives were also marked on the road maps for updating these maps.

4. SELECTION OF CANAL ROADS

4.1 Route Selection

4.1.1 Background

The idea of converting canal roads for public use was first proposed several years ago but with other priorities no qualitative study had been implemented until this one was commissioned in late 1986. It was thought that if the cost/benefits indicated that the construction of the canal roads was feasible there might be some additional benefits in the form of lower construction costs if the canal road construction could be scheduled to coincide with the canal rehabilitation proposed in ISR Project-Phase II.

The investigation and analysis centred on systems identified by USAID and the PIDs as having the greatest potential for development and for contribution to the economy of the Provinces of Punjab, Sind, and NWFP. While the rehabilitation of canals and drains in Phase-I was based solely on the need for emergency repairs, this feasibility study considers other important economic and social benefits that will enhance the canal road project. Some of the potential benefits are reduced canal bank inspection road maintenance, faster transport of goods and supplies to and from markets, reduction in spoilage and storage costs, reduction in vehicle operating and maintenance costs, and enrichment of the rural social life.

When the concept of public roads along the canal banks was first proposed the PIDs were generally opposed to the idea, citing a variety of reasons why it would be impractical and costly. Now, however, after a more detailed examination of the problem and after evaluating the operational data from some canal roads that were deliberately opened to the public, the PIDs agree that some of their original concerns did not in fact materialize.

Moreover they have agreed that if the roads were to be constructed, the construction should be supervised by an independent local consulting engineering firm and the roads must conform to DOH specifications. Since the DOH have established design criteria for various classes of road, the basic structural design was more or less determined for the Consultants.

With the DOH specifications as the standard for the road geometry, and therefore cost, the Consultants'economists analysed the impact of the construction of such a road on the communities. In addition to the direct and immediate benefits associated with the actual building of the road, it was desirable to implement the project in a manner that would raise the level of competence of individuals and benefit the community as a whole. An integral objective of the Consultants approach to the project was to make certain that on completion

sufficient technical knowledge and motivation will have been transferred to ensure that the roads and equipment will be maintained after the roads are constructed.

4.1.2 Study Systems

The purpose of the CRP was to determine the feasibility of building canal bank roads concurrent with the rehabilitation of canals and drains in ISRP-II. A primary objective of ISRP-II was to complete systems that had been partially restored under ISRP-I. As a recommendation for Phase II NESPAK (April 1986) identified a series of canals and drains for rehabilitation. With this as a guide USAID in collaboration with PIDs and Provincial Co-ordinators specified 13 systems that the Consultants were to study for possible road construction.

As far as possible the proposed roads were to be along canals scheduled for Phase II reconstruction, however, to integrate the roads with the existing highway network and to provide a perceived needed service to under developed areas the Consultants were permitted to recommend roads along canals rehabilitated under ISRP I and along canals not yet scheduled for rehabilitation. In some cases small connecting road links were required between canals or drains and existing metalled roads.

The USAID designated study systems were :

System No. (Map No.)	Description
	Punjab
2	Jhang Branch System
3	Gogera Branch System
4	Depalpur Canal System
5	Mailsi Canal System
	Sind
6	Nasir Branch System
7	Jamrao and Mithrao Canal System - Part I
8	Jamrao and Mithrao Canal Systems- Part II
9	Gotki Feeder System
10	Rohri Canal System
11	Dadu Canal System
	NWFP
12	Kabul River Canal System
13	Paharpur Canal System
14	Marwat Canal System
15	Upper Swat Canal System

4.1.3 Methodology

To properly determine the transportation requirements within each system, the Consultants discussed the project with the Secretaries, Chief Engineers, other officers of the PIDs and DOHs, and other consultants in each of the three Provinces. Subsequent meetings were held with Divisional and District Engineers. Field trips

with the Executive Engineers were made to representative canals within systems in the Provinces. (Complete list of meetings and individuals -App. 1.1). The PIDs and DOHs supplied detailed maps of their respective jurisdictions as well as written and oral observations of the current, planned and desirable status of the road and canal network.

The road maps received from the DOHs were believed to be current to June, 1986 and incorporate the complete road network for each Divison. These maps included not only the National and Provincial highways but also all other known metalled roads built under the programmes of Farm to Market Roads, Sugar Cess roads and roads maintained by the District Councils and other agencies. These maps were found to be in error in some cases and incomplete in others but were improved incorporating the observations of MAAA engineers and were expanded to include new roads built and being built under various special programmes, MNA and MPA schemes and Farm to Market roads sponsored by the Asian Development Bank.

The PID maps of the canal and drainage systems studied by the Consultants were transferred to the relevant road maps and thus composite maps were produced. By integrating the two systems of irrigation canals and roads a clear picture emerged regarding canal routes viz-a-viz road networks. From these integrated maps it was possible for the Consultants to examine how the roads on

the canal banks would fit in to the overall road network and whether or not these additional facilities could be justified.

In order to assess the routes, the following criteria were adopted :-

1) Only those banks would be considered where no parallel roads exist within 4 to 8 mi. thus new areas will be opened for development.
2) The proposed canal bank road would provide inter-district links or connect important population centres/Mandi Towns.
3) Those portions of the canal banks which would divert part of the traffic from the existing roads.
4) Those portions of the canal banks or other links which would be instrumental in forming a network if connected with the existing roads.
5) Any route that can be justified for economic or social reasons.

4.1.4 Embankment Roads to be Constructed

The lists of roads recommended in the canal systems studied by Consultants are given in Appendices 4.1, 4.2, 4.3. Descriptive notes on all the roads are given in appendices 4.4 through 4.9.8.

Table 4.1 is an abstract of the roads recommended :-

TABLE 4.1

EMBANKMENT ROADS TO BE CONSTRUCTED

Province	Road over canal banks	Road over bank of canal branches	Road over bank of distributories	Road over drain banks	Other Connecting links	Total
	Length in mile	Length in mile	Length in mile	Length in mile	Length in mile	
Punjab	109	90	328	39	30	596
Sind	174	66	206	8	31	485
NWFP	48	46	67	--	1	162
Total	331	202	601	47	62	1243

The total length of roads recommended in the four canal systems in the Punjab is 596 miles. System-wise Phase-wise break-up of the lengths is given in Table 4.2.

The total length of roads recommended in the five canal systems of Sind is 485 miles. System-wise and Phase-wise break is given in Table 4.3.

In case of NWFP there are four systems and the total length of roads recommended is 162 miles. System-wise and Phase-wise break up of the road length is given in Table 4.4.

Phase-wise break-up of lengths recommended in the three

TABLE 4.2

PUNJAB PROVINCE

IRRIGATION SYSTEM-WISE, PASE-WISE

S.NO.	IRRIGATION SYSTEM	LENGTHS (Miles)													
		MAIN CANALS			BRANCH CANALS			DISTRIBUTORIES AND MINORS			DRAINS			Other links	Total
		Phase I	Phase II	Balance	Phase I	Phase II	Balance	Phase I	PhaseII	Balance	Phase I	PhaseII	Balance		
2	Jhang Branch	0	0	0	30.05	0	12.63	51.27	7.43	16.17	0	14.76	0	0.31	132.62
3	Gogera Branch	0	0	0	0	27.18	2.29	4.21	8.97	17.86	0	0	24.09	2.24	86.84
4	Depalpur Canal	0	10	77.42	0	0	0	15.19	30.43	85.96	0	0	0	6.64	225.64
5	Mailsi Canal	0	0	21.38	7.20	0	10.76	26.49	2.65	60.98	0	0	0	21.30	150.76
TOTAL		0	10.00	98.80	37.25	27.18	25.68	97.16	49.48	180.97	0.00	14.76	24.09	30.49	595.86

Phase I = 134.41 Miles
Phase II = 101.42 Miles
Balance = 329.54 Miles
Connecting Links = 30.49 Miles

Main Canals = 108.8 Miles
Branch Canals = 90.11 Miles
Distributories/Minors = 327.61 Miles
Drains = 38.85 Miles
Other Links = 30.49 Miles

SOURCE : CONSULTANTS ESTIMATE

TABLE 4.3

SIND PROVINCE

IRRIGATION SYSTEM-WISE, PASE-WISE

S.No	IRRIGATION SYSTEM	LENGTHS (Miles)													
		MAIN CANALS			BRANCH CANALS			DISTRIBUTORIES AND MINORS			DRAINS			Other links	Total
		Phase I	Phase II	Balance	Phase I	Phase II	Balance	Phase I	PhaseII	Balance	Phase I	PhaseII	Balance		
6	Nasir Canal	0.00	14.39	0.00	0.00	0.00	0.00	0.00	11.71	4.36	0.00	0.00	0.00	5.00	35.46
7	Jamrao Canal	14.21	16.01	0.00	0.00	0.00	0.00	0.00	18.54	0.00	0.00	0.00	0.00	5.00	53.76
8	Jamaro & Mithrao Canals	22.35	47.25	13.26	0.00	20.17	0.00	0.00	27.26	0.00	0.00	0.00	0.00	0.00	130.29
9	Ghotki Feeder	0.00	0.00	23.10	0.00	31.60	14.02	0.00	22.16	37.16	0.00	0.00	0.00	10.73	138.77
10	Rohri Canal	0.00	0.00	0.00	0.00	0.60	0.00	0.00	46.33	9.66	0.00	0.00	0.00	6.00	61.99
11	Dadu Canal	0.00	23.29	0.00	0.00	0.00	0.00	0.00	28.36	0.00	0.00	0.00	8.52	4.57	64.74
	Total	36.56	100.94	36.36	0.00	51.77	14.02	0.00	154.36	51.18	0.00	0.00	8.52	31.30	485.01

Phase I = 36.56 Miles
Phase II=307.07 Miles
Balance =110.08 Miles
Connecting Links = 31.30 Miles

Main Canals = 173.86 Miles
Branch Canals = 65.79 Miles
Distributories/Minors = 205.54 Miles
Drains = 8.52
Other Links = 31.3 Miles

SOURCE : CONSULTANTS ESTIMATE

TABLE 4.4

N.W.F.P

IRRIGATION SYSTEM-WISE, PHASE-WISE ROAD LENGTH RECOMMENDED FOR METALLING

S.NO.	IRRIGATION SYSTEM	Districts	LENGTHS (Miles) MAIN CANALS			BRANCH CANALS			DISTRIBUTORIES AND MINORS			DRAINS	Other links	Total
			Phase I	Phase II	Balance	Phase I	Phase II	Balance	Phase I	Phase II	Balance			
12	Kabul River Canals	Peshawer	0.00	2.84	13.33	0.00	0.00	0.00	0.00	0.00	2.98	0.00	0.00	19.15
13	Paharpur Canals	D.I.Khan	0.00	0.00	31.62	0.00	0.00	0.00	0.00	0.00	0.00	0.00	0.00	31.62
14	Marwat Canals	Bannu	0.00	0.00	0.00	0.00	0.00	0.00	0.00	16.74	11.31	0.00	0.00	28.05
15	Upper Swat Canals	Mardan	0.00	0.00	0.00	0.00	14.01	32.26	0.00	11.36	24.25	0.00	1.00	82.88
	TOTAL		0.00	2.84	44.95	0.00	14.01	32.26	0.00	28.10	38.54	0.00	1.00	161.70

Main Canals	= 47.79 Miles	Phase I =	0.00 Miles
Branch Canals	= 46.27 Miles	Phase II =	44.95 Miles
Distributories/Minors	= 66.64 Miles	Balance =	115.75 Miles
Other Links	= 1.00 Miles	Other Links =	1.00 Miles

SOURCE : CONSULTANTS ESTIMATE

Table 4.5

Phase-wise Length recommended in Punjab, Sind and NWFP

Province	Length in miles				Total
	Phase I	Phase II	Balance	Connecting links	
Punjab	134	102	330	30	596
Sind	37	307	110	31	485
NWFP	0	45	116	1	162
Total	171	454	556	62	1243

Table 4.6

Canal-wise Break-up of total Length recommended in Punjab, Sind and NWFP

Province	Length in mile					Total
	Main canals	Branches	Distributories Minors	Drains	Other Links	
Punjab	109	90	328	39	30	596
Sind	174	66	206	8	31	485
NWFP	48	46	67	--	1	162
Total	331	202	601	47	62	1243

provinces is given in Table 4.5.

Canal-wise break-up of legnths recommended in the three provinces is depicted in Table 4.6.

4.1.5 Roads Outside Study Systems

The CRP study focussed on the areas defined by the PIDs/USAID but discussions in all three Provinces determined that there was a need for additional roads outside the specified study systems.

Punjab

The Secretary PID indicated that Multan and Sargodha zones had been left out of the study area and (future) consideration should be given to providing roads there.

Sind

The extreme southern part of Sind was excluded from the study systems. At the request of the Provincial Co-ordinator MAAA's Road Engineer inspected the area and identified 62 miles of road, all on drains scheduled for Phase II rehabilitation that, by reconnaissance only, could be justified. No economic justification, survey, soil or compaction testing was done however MAAA's Road Engineer estimated the cost of the 62 miles, based on experience in similar conditions, at 88.08 M Rs. (Ref. App. 4.10, Map 16). This cost is not included in the CRP estimates.

NWFP

The Chief Engineer, Irrigation indentified 19 reaches that in his opinion, urgently require roads. The roads listed are somewhat isolated and outside the study systems but could be considered for future development. MAAA did not survey, test or evaluate any of the roads.

Lower Swat Canal

1. Branch RD 37500 to 49000
2. Kalpani Disty RD 16000 to 51000
3. Minor No.1 of Kalpani Disty 0-19000
4. Disty No.7 L.S, Canal 0 to 14000
5. Minor No.1 of Disty No.9, RD 0 to 24000
6. Palosai Minor RD 14000 to 17000
7. Nisatta Minor Head to RD 11030
8. Minor No.3 Disty No.9 head to RD 6000
9. Disty No.9, RD 58000 to 83000.

Upper Swat Canal

1. Shingari Minor RD 0-17000
2. Sarwala Disty RD 0-15000 + bridge is required across the Machai Branch RD 64000.

Pahar Pur Irrigation System

1. Takarwah Disty (Consultant's opinion - too close to existing road)
2. Rakh Shahkot Minor (3 miles)

Marwat Canals System

1. Marwat Canal RD 90000 to 180,000
2. Saradraga disty RD 21500 to Tail with link to Duran Khan Road
3. Jani Khel Disty
4. Ghazni Khel Minor

Kabul River Canals System

1. Kabul River Canal RD 8000 to 72000 - shingling has already been done under income generating schemes.

NWFP has over 120 miles of metalled canal patrol roads open to public use. Many of these are in a state of deterioration that cannot be repaired but must be reconstructed to proper geometry, drainage, and compaction standards. The past policy has been to repair these roads with a 4 inch aggregate over-lay stabilized with triple surface treatment. Unfortunately such repairs, though expedient, are wasted since the basic cause of the deterioration has not been corrected. The surface layers should be excavated and stockpiled for later use as subbase. The underlying embankment should then be elevated where necessary and compacted and the grade rebuilt to current specifications. The cost of rebuilding these roads will be the same as constructing new roads because the re-use of the excavated material will offset the extra cost of its excavation.

The metalled roads in need of repair, as identified by NWFP PID/CW are :

Outside the study systems :

1. Koragh Branch RD 0 - 37500
2. Shaikh Yusaf Branch RD 0 - 19000
3. Distributory No. 8 RD 0 - 38500
   RD 53000 - 69000
4. Main Canal L.S.C. RD 0 - 122000
5. Khan Mali Branch RD 0 - 53000
6. Distributory No.6 RD 0 - 24000

Total	59 Miles

Within Study Systems

Upper Swat

1. Dhundian Disty, Upper Swat Canal RD 0 - 16300
2. Abazai Branch RD 48000 - 66000
3. Kurvi Branch RD 0 - 15000

Total	9 Miles

The length of road within the study systems has no impact on the foreign exchange component but would increase the local currency requirement by

9 mi x 1 MRs/mile = 9 MRs.

The metalled roads in need of repair were not identified in time to arrange surveying, testing or economic analysis. The 9 MRs additional cost therefore has not been included in the CRP budget.

4.2. Objective (Functional) Criteria

While selecting the canal bank for metalling the following points have been kept in view as desireable functional criteria :-

i) Links one or more villages directly to an existing all - weather road useable year-round by trucks and buses.

ii) Links one or more villages directly to a market town or administrative centre.

iii) Links one or more villages directly to an existing all-weather road which in turn co-nects to a market town or administrative centre.

iv) The existing road parallel to the proposed road is not too close.

v) The proposed roads mostly lie within the rural areas.

vi) As far as possible the right-of-way is avai-lable for constructing the road to the re-quired standards so that additional land acquisition is to the minimum possible extent.

vii) For other connecting links existing katcha tracks are used whereever possible.

5. CANAL ROAD DESIGN

5.1 Type of Road

A visual inspection of the canals, branches and distributories indicates that there will be two types of roads :

i) Where sufficient width of the bank is available the road will be built on the bank itself.

ii) If the existing width of the bank is not adequate to accommodate the road and the widening of the bank is too expensive because of the excessive height of the bank the road will be constructed in the adjoining area at a lower level running along the canal bank. The latter alternative will be applicable provided sufficient right of way is available or the acquisition of additional land is not too expensive.

The various types of roads which can be constructed over or along the canal banks are :-

i) Shingle roads

ii) Water-bound-macadam roads.

iii) Concrete roads

iv) Bituminous road pavements

Considering the nature of the soil and the climate conditions in the three Provinces, shingle and waterbound macadam roads will require excessive maintenance due to the replenishment of shingle and

stone dust, and regular grading, watering and rolling (maintenance cost comparison App 8.9 A, B, C,).

In the USAID Project Paper "Pakistan : Road Resources Management September 1986" an economic comparison of paved (metalled) roads versus shingle roads has been done for Sind Province. In general the costs used for road construction and maintenance were derived from the Berger Report. " For the economic analysis the cost of amortization was deducted from hourly cost of equipment. Depreciation, however, was not deducted, since it was not possible to perform a parallel exercise in the case of current expenditures, nor were shadow prices used to reflect the opportunity cost of unskilled labour (which may be close to zero in the Sind most of the year), diesel. etc."

Table 5.1 summarizes the life - cycle costs on an annualized basis for paved roads and shingle roads in Sind. (Pakistan: Road Resources Management, 391-0480, Sept. 86). The costs shown are annualized financial costs (undiscounted), assuming a 20 year life. In the case of the gravel roads, it is assumed that a 22' road (ADT of approximately 50) is regravelled on the average five years after initial construction and then every 10 years (1.5 gravelling over the 15 year period and that the 18' road (ADT approximately 25) is regravelled on the average 8 year after construction, and then every 16

years (0.75 gravelling over the 12 year period).

As shown in Table 5.1 the annualized financial cost of the paved road is less than that of a 22 foot shingle road and only slightly higher than that of an 18 foot shingle road. Moreover, the shingle road has a much higher maintenance cost creating a larger recurrent cost burden, which is much more difficult to finance than the initial construction cost which is often financed under an international financial assistance programme.

The analysis was also carried out in economic terms taking into consideration vehicle operating cost surveys, discounting the stream of costs at 12%, and taking the initial cost as the cost to upgrade from katcha rather than the full construction cost. This analysis shows that a paved road has a discounted average life - cycle cost of Rs.42,568, compared to a cost of Rs. 44,538 on a shingle road, assuming an ADT of 25 vehicles per day .

TABLE 5.1

Comparison of Paved Road and Shingle Road Costs

Sind Province

(Rs. per year, over 20 years)

	Paved Road	Shingle Road 22 Ft.	Shingle Road 18 Ft.
Initial construction	51693	38306	38306
Annual direct cost	17933	7130	5130
Overhead Construction	2331	927	667
Maintenance	--	30197	23139
Total	71957	76560	67242

Source: Project Paper, Pakistan: Road Resources Managemen 391 - 0480 September 1986

Note : Separate estimates of construction cost not available for 22' and 18' shingle roads.

NWFP were not able to supply exact costs of O&M for shingle roads under DOH jurisdiction; however the C and W as a matter of policy are discouraging the use of shingle as a surface treatment and requiring a bituminous surface on all new roads. There are several reasons for this change in attitude :

1. the cost of shingle has risen to 3.5 Rs./cu.ft. and from their experience a shingle road must be reshingled every 3-4 years. For material alone this represents an annual cost of almost 62000 Rs. per mile for a 20 foot shingle surface on a 22 foot embankment with a 8 inch redressing.

(5280x20x8in.x3.5 Rs./4 years = 61908 Rs./year/mi.

2. many of the low level roads are poorly compacted and the shingle simply disappears into the subgrade particularly after heavy rains and subsequent flooding.
3. roads with shingle are impassable in the rainy season even with 4WD vehicles.
4. the cost of O and M of shingle roads is increased because it requires more heavy equipment to maintain it - graders, water trucks, compactors, and the cost of maintenance already high in NWFP is increased by the high cost of equipment transportation within the Province. Bituminous surfaces on the other hand can be maintained by a crew with a dump truck and 1 Ton compactor which can easily be pulled on a small trailer behind the truck.
5. the GO Province O and M grant of 3664 Rs/mile. (Ref. 6.3.5) for a 10 foot road falls far short of the actual cost of maintenance. As calculated in 1 above the cost of shingle for a 10 foot road would be 31000 Rs./mile per year. If the GO Province authorized a 50% grant of 15500 Rs./mile this would only meet its share of the cost of material and a further grant of approximately 15000 Rs/mile would be required to meet its grant obligation. It is doubtful if a matching 30500 Rs/mile

could be raised locally to maintain a substandard 10'foot road. Clearly this level of O and M cannot be justified economically.

Complete reconstruction with proper compaction may eliminate or at least improve the problems cited in 2 and 3 but will not significantly reduce the cost of O and M. At best reshingling may occur every 5 years reducing the annual material cost to 25000 Rs./mile for a 10 ft.road.

On the basis of these findings, it was determined that it would not be appropriate to encourage the districts to choose shingle roads over paved roads when it becomes necessary to upgrade a katcha road.

This finding will definitely apply to the southern plain areas of Punjab and almost the whole of Sind where no shingle is found locally and would have to be trucked from northwest sources.

Although the official figures for Sind indicate a fairly extensive gravel road network the inventories, in fact, found no gravel roads. This is partly due to the fact that the gravel roads that had been constructed in the past have not been regravelled due to the high cost involved and have therefore reverted to katcha roads. The road Engineers in Sind have noted repeatedly that gravel roads are extremely expensive to maintain in Sind. The same will be true for the southern plains of

Punjab.

An alternative to the shingle road is the waterbound macadam road. It is an intermediate step between a shingle and bituminous surfaced road. The construction of the embankment is similar in all cases but because the higher grade surface anticipates a greater ADT travelling at higher speeds the embankment width is increased to 32' increasing the width of the shoulders and providing an added margin of safety. The water bound macadam road has a subbase and base course similar to the TST thus the cost is considerably more than the shingle surface but instead of a bitumenous surface a layer of stone dust is spread on the base course, watered and compacted until a firm smooth surface in obtained.

Waterbound macadam relies on the binding capability of the stone dust and water and works well in areas of high humidity and where the addtion of water causes a cementing action in the stone dust. Where the cementing action does not occur, where the climate is hot and dry, and the ADT is high the stone dust tends to dry and blow away leaving the rough angular base course exposed. If the stone dust is not replaced quickly VOC will rise rapidly due to the rough surface and the base course will start to deteriorate because it in itself has no binding ability. (Ref. Table 6.10).

The riding quality of shingle and water bound macadam roads will also be much less satisfactory than that of concrete or bituminous treated surfaces thus resulting in higher vehicle operating costs.

Because of the high cost of cement, steel and aggregates concrete roads will be much more expensive, and although maintenance may be less, they have not been considered for the CRP.

The Consultants have recommended using a flexible bituminous road surface which will be more suitable not only from the construction and maintenance costs but also for its superior riding quality and contribution to reduced vehicle operating and maintenance costs. Such roads are already being built as the standard by the Federal and Provincial Governments under the Farm to Market roads and rural roads programmes.

5.2 Road Pavement Design

The underlying principle of pavement design is that no part of the pavement should be over stressed. Thus the function of the pavement design is to evaluate the type, thickness and treatment of materials that will most economically fulfil these requirements.

There are three steps to be followed in designing a new road pavement:

a) Estimating the amount of traffic (and its axle load distribution) that will use the road over the selected design life.

b) Assessing strength of subgrade soil over which the road is to be built.

c) Taking into account (a) & (b) selecting the most economical combination of pavement materials and layer thicknesses that will be sufficient to provide satisfactory service over the design life of the pavement with only routine maintenance.

5.2.1 Traffic Loads

The loads imposed by private cars do not contribute significantly to the structural damage caused to road pavements by traffic. Therefore, for the purpose of structural design, cars can be ignored and only the total number and the axle loading of the commercial vehicles that will use the road during its design life need to be considered. In this context a commercial vehicle is defined as any goods or public service vehicle that has an un-laden weight of 1500 KG (1.5 tonnes) or more.

5.2.2 Design Life and Traffic Growth Rate

The designer has to estimate the total number of commercial vehicles that will traverse the pavement in the course of its design life. For this it is necessary:-

a) To know the number of commercial vehicles that will use the road when it is first opened to traffic.

b) To forecast the annual growth rate of this traffic, and

c) To determine what the design life should be.

Annual growth rates of commercial traffic in the developed countries generally fall in the 3 percent to 6 percent range and tend to be stable over periods of many years. In many developing countries traffic growth rates are higher and vary considerably from year to year, area to area and road to road. In these circumstances long term forecasting of traffic is very difficult and is one reason why the design life selected for road pavement for developing countries is often about 10 years compared with 20 years in the more developed economies.

The second reason for choosing a shorter design life when the traffic growth rate is high is that it is rarely economical to build a road pavement strong enough to carry the traffic that will be using it twenty years or so in the future when it may be ten times as great as the initial traffic.

In such cases it is recommended that the pavement design is based on a 10-year design life and that a form of construction is chosen that can be readily strengthened, normally by adding a bituminous over lay when the growth in traffic requires it. In this context design life'

does not mean that at the end of the period the pavement will be completely worn out and in need of reconstruction; it means that towards the end of the period the pavement will need to be strengthened so that it can continue to carry traffic satisfactorily for a further period.

In view of the above considerations a design life of 10 years has been adopted to work out the pavement design. The same criteria is being generally used by the Highway Departments in Pakistan for Farm to Market and Rural roads.

5.2.3 Traffic Generation

The roads along the canal banks will function primarily as Farm to Market roads and Rural roads. The traffic likely to be generated on these roads will depend on the following factors:

1. Total population served by the roads.
2. Total agricultural inputs like seeds, fertilizers, chemicals, farm machinery and agriculture implements etc.
3. Total marketable surplus agriculture and other produce of the areas served by the road.
4. The extent to which any diverted traffic is likely to use the roads.

In the case of Farm to Market roads and Rural roads being built by the Provincial Governments a minimum average daily traffic count of 100 commercial vehicles is generally adopted.

The same criteria has been adopted in the case of canal bank roads. A traffic growth rate of 7% has been considered on the basis of traffic counts carrried-out by the Highway Departments from year to year in similar areas.

The Canal Patrol roads in Punjab and Sind are not (officially) open to traffic and as such it is not possible to carry out meaningful traffic counts on these roads. An indirect method has, therefore, been adopted to arrive at reasonably fair estimates of traffic which will use the canal banks after they are metalled and opened to public. As an example the Jhang Branch and Gogera Branch systems analyses are included in the text.

These systems partly cover the districts of Faisalabad, Jhang and Toba Tek Singh . A large number of Farm to Market roads and other rural links have been constructed in the three districts on which traffic count surveys have been carried out by the Punjab Highway Department. The roads selected in the three districts are listed in the Table 5.2. Major and district roads have not been included in the study since the concern is with the use of Farm to Market and Rural Roads. The traffic plying on

the selected roads has been adopted from Punjab Highway Department booklet " Summary of Traffic Data for Punjab Highways - 1985". The average traffic intensity was calculated separately for the three districts with an average composition of various types of vehicles in each district. This was done for motorized vehicles only.

The area of three districts falling in the two systems was calculated as :

Faisalabad	22.8 %
Jhang	87.1 %
T.T.Sing	26.5 %

The proportionate percentage areas of each district covered by the two systems is :

Faisalabad	16.72 %
Jhang	63.85 %
T.T.Singh	19.43 %

The average traffic plying the three districts was further reduced as per proportionate percentage area of the districts covered by the systems. After this the overall percentage of traffic for the three districts combined was calculated. Details are given in Table 5.2, 5.3.

The composition of motorized vehicles was arrived at as:

Motorcycles	Motorcars	Buses	Trucks	Tractor Trolleys
208	119	49	50	71

This was based on traffic count data for 1985. Adding 7% traffic growth per annum traffic for 1986 and 1987 was projected for commercial vehicles as :

	Buses	Trucks	Tractor Trolleys	
1986	52	53	76	
1987	56	57	81	= 194

Even if we take 50% traffic on canal bank roads the assumption of 100 vehicles is reasonably correct.

A similar exercise has been done for roads in Depalpur and Mailsi Canal Systems. The Depalpur system covers parts of Kasur and Okara districts. Traffic data for roads in these districts is given in Table 5.4 Mailsi Canal System covers parts of Vehari and Multan districts. Traffic data for roads in these districts is given in Table 5.5.

A persual of these tables will show that even if we take 50% traffic on the canal bank roads the assumption of 100 commercial vehicles per day is, again, fairly accurate.

As a matter of fact the roads proposed by the Consultants will attract more intense traffic because these roads will not be isolated links but will form a network with the existing roads in the districts. So it is expected that the developed, generated and diverted traffic will increase rapidly on these roads.

Table 5.2

TRAFFIC DATA SHEET
Gogera System

FAISLABAD	ANIMAL DRIVEN	MOTOR CYCLES	MOTOR CAR	BUSES	TRUCKS	TRACTOR TROLLIES	TRUCK TRAILOR	TOTAL MOTORISED
JARANWALA - SYEDWALA	819	367	163	128	37	140	0	835
SAMANDRI - GOGIRA	705	468	216	138	111	154	1	1088
CHAK JHUMARA - SHAHKOT	217	183	95	4	7	25	0	314
CHAK JHUMARA - S.HIL	150	410	238	139	35	75	0	897
JARANWALA - BUCHAINA	497	279	192	68	47	107	2	695
KHIDDER WALA - KILLIAN WALA	229	193	91	5	87	81	0	457
TANDIAN WALA - KANJAWANI	163	193	104	60	44	60	0	461
DIJKOT - PACCA ANNA	176	150	121	34	35	53	2	395
KHIDDER WALA - GOGIRA	228	240	40	45	12	98	0	435
SALARWALA - MURADWALA	80	89	10	23	32	52	0	206
CHAK JHUMARA - SHAHKOT	54	72	32	0	27	30	0	161
CHAK JHUMARA - SALARWALA	236	387	166	114	44	168	0	879
Total :	3554	3031	1468	758	518	1043	5	6823
Average :	296	253	122	63	43	87	0.42	569
% age :		44.46	21.44	11.07	7.56	15.29	0.07	100
JHANG								
JHANG - GOGERA	211	416	249	86	84	115	2	952
MARI SHAH - 18 HAZARI	24	29	57	47	28	41	0	202
18 HAZARI - HAYDERABAD	39	28	93	98	117	53	1	390
CHUND - AHMAD WALA	20	57	42	78	129	50	0	356
SHOR KOT - GARH MAHRAJA	196	161	123	3	7	68	0	362
RODU-SULTAN - UCHGUL IMAM	104	50	39	0	2	35	0	126
CHAK 446 - CHAK 176	16	19	16	0	2	36	0	73
SHOR KOT - WARYAM WALA	28	45	51	1	15	23	3	138
VAHIR - ADIL WALA	12	66	17	23	15	43	0	164
RABWAH - TIRKHANI WALA	59	125	142	2	35	31	0	335
SHOR KOT - SHOR KOT CITY	138	320	263	70	95	57	5	810
Total :	847	1316	1092	408	529	552	11	3908
Average :	77	120	99	37	48	50	1	355
% age :		33.80	27.89	10.42	13.52	14.08	0.28	100
T.T. SINGH								
PIR MAHAL - BHUSSI	314	362	74	34	21	82	0	573
PIR MAHAL - GHUSIA COLLEGE	277	877	252	71	63	151	0	1414
T.T.SINGH - GOGERA	360	700	336	128	90	113	1	1368
GOJRA - PENSARA	348	527	298	199	90	119	2	1235
PIR MAHAL - KAMALIA	82	152	143	22	42	88	0	447
KAMALIA - SANDIAN WALA	377	282	119	51	103	243	0	798
T.T.SINGH - WARYAM WALA	269	354	84	3	24	69	0	534
Total :	2027	3254	1306	508	433	865	3	6369
Average :	290	465	187	73	62	124	0.43	910
% age :		51.09	20.51	7.98	6.80	13.58	0.05	100
Overall Average :	221	279	136	58	51	87	1	612
Overall %age :		45.59	22.22	9.48	8.33	14.22	0.6	100

Source : Summary of Trafic Data for Punjab Highways Planning and Design Dircetorate Punjab Highway Department - Lahore, April, 1986.

TABLE NO.5.3

TRAFFIC DATA SHEET

Gogera System

	MOTOR CYCLES	MOTOR-CAR	BUSES	TRUCKS	TRACTOR TROLLIES	TRUCK TRAILERS	TOTAL MOTORISED
FAISALABAD VOL. A	253	122	63	43	87	1	569
%	44.46	21.44	11.07	7.56	15.29	0.18	100
JHANG VOL. B	120	99	37	48	50	1	355
%	33.8	27.89	10.42	13.52	14.08	0.29	100
T.T. SINGH VOL. C	464	186	73	62	124	1	910
%	50.99	20.44	8.02	6.81	13.63	0.11	100
FAISALABAD	42	20	11	7	15	---	95
JHANG	76	63	24	31	32	1	227
T.T. SINGH	90	36	14	12	24	1	177
TOTAL D	208	119	49	50	71	2	499
%age.	11.68	23.85	9.82	10.02	14.23	0.42	100
Assumming 60% of D a new Road in the Area							
	125	71	29	30	42	1	298
Traffic Assumed for provisional design			20	35	45	--	--

SOURCE : Summary of Traffic Data for Punjab Highways Planning and Design Directorate Punjab Highway Department- Lahore April, 1986.

Table 5.4

TRAFFIC DATA SHEET

(DEPALPUR SYSTEM)

OKARA DISTRICT ROADS	ANIMAL DRIVEN	MOTOR CYCLES	MOTOR CAR	BUSES	TRUCKS	TRACTOR TROLLIES	TRUCK TRAILOR	TOTAL MOTORISED
BUNGAHAYAT - MIANCHANNU	15	47	56	153	104	29	1	390
DEPALPUR - HUJRA	278	395	260	84	191	138	8	1076
RENALA KHURD - SHERGARH	790	420	159	70	99	185	6	939
OKARA - SATGARAH	137	246	87	94	41	230		698
HUJRA - CHUNIAN	84	88	10		14	37		149
HUJRA - HAVELI	274	274	45	41	56	84		500
HAVELI - MOHAMMAD YAR	88	110	80	3	22	66	1	282
BASIRPUR - DEPALPUR	115	110	48		21	72		251
DEPALPUR - WASATAWALA	82	111	113		4	60		288
Total :	1863	1801	858	445	552	901	16	4573
Average :	207	200	95	49	61	100	2	508
% age :		39.37	18.70	9.65	12.01	19.69	0.39	100
KASUR DISTRICT ROADS								
KASUR - HUSSAIN WALA	415	359	185	42	68	117		771
RAIWIND - KOT RADHAKISHAN	245	200	315	63	98	89		765
CHUNIAN - CHANGA MANGA	141	334	225	86	148	69		862
POTTOKE - HALA	294	240	98	88	111	148	1	686
KASUR - BHIKHIWIND	140	135	77	1	39	22		274
KASUR - KOT RADHAKISHAN	105	103	72	26	43	47		291
CHUNIAN - WAN RADHARAM	75	134	36	1	31	50		252
KOT ANOP SINGH- KOTLI ABU BAKAR	102	12	12		15	14		53
Total :	1517	1517	1020	307	553	556	1	3954
Average :	190	190	128	38	69	70	0	494
% age :		38.39	25.81	7.77	13.99	14.07	0.03	100
DEPALPUR SYSTEM								
KASUR	92	92	62	18	33	34		239
OKARA	107	103	49	25	32	52	1	262
Total :	199	195	111	43	65	86	1	501
% age :		38.92	22.16	8.58	12.97	17.17	0.20	100

AREA UNDER SYSTEMS

KASUR = 57 %
OKARA = 61 %

FOR TRAFFIC

KASUR = 48.31 %
OKARA = 51.69 %

Source : Summary of Trafic Data for Punjab Highways Planning and Design Dircetorate Punjab Highway Department - Lahore, April, 1986.

Table 5.5

TRAFFIC DATA SHEET

(MAILSI SYSTEM)

VEHARI DISTRICT ROADS		ANIMAL DRIVEN	MOTOR CYCLES	MOTOR CAR	BUSES	TRUCKS	TRACTOR TROLLIES	TRUCK TRAILOR	TOTAL MOTORISED
TIBBA	- MAILSI	53	149	200	133	93	36	1	612
VEHARI	- KATCHA KHOO	162	412	229	105	108	143		997
BUREWALA	- JOYA	651	620	272	109	142	97	1	1241
BUREWALA	- MIANCHANNU	138	200	82	87	30	70		469
MANA	- JAMLERA	360	312	59	36	16	61		484
BAGGO	- SAHUKA	161	239	90	5	43	67		444
SAHUKA	- LUDDAN	117	176	79	53	79	91	1	479
LUDDAN	- KARMPUR	98	134	72	32	28	92		358
KARMPUR	- MITRO	43	90	56		9	39		194
	Total :	1783	2332	1139	560	548	696	3	5278
	Average :	149	259	127	62	61	77	1	586
	% age :		44.20	21.67	10.58	10.41	13.14	0.17	100
MULTAN - ROADS									
MULTAN	- BOSAN	248	856	372	134	37	86	1	1486
KAROR PACCA	- LODHRAN	535	775	290	96	151	90	2	1404
KAROR PACCA	- MAILSI	179	440	247	123	54	151	3	1018
LAR	- SHUJABAD	78	243	155	212	145	91	2	848
MULTAN	- BUDLA SANT	365	398	106	53	14	103		674
DUNYAPUR	- KAROR PACCA	74	177	164	84	116	64		605
DUNYAPUR	- BASTI MALOOK	98	419	191	141	126	46		923
DUNYAPUR	- DO KOTTA	102	167	56	54	46	32		355
MULTAN	- SHUJABAD	151	405	214	67	82	152		920
SHUJABAD	- JALALPUR	316	298	146	137	118	76		775
BOSAN	- SALARWALA	83	259	112	98	29	67		565
LODHRAN	- JALALPUR PIR WALA	77	266	107	111	76	61		621
SHUJABAD	- LODHRAN	121	172	88	65	33	49		407
	Total :	2421	4875	2248	1375	1027	1068	8	10601
	Average :	186	375	173	106	79	82	1	816
	% age :		45.96	21.20	12.99	9.68	10.05	0.12	100
MULTAN		101	204	94	58	43	45	1	445
VEHARI		90	118	58	28	28	35		267
TOTAL IN MAILSI SYSTEM		191	322	152	86	71	80	1	712
% age (SYSTEM)			45.22	21.35	12.08	9.97	11.24	0.14	100

AREA UNDER SYSTEMS

MULTAN = 31 %
VEHARI = 26 %

FOR TRAFFIC

MULTAN 54.39 %
VEHARI 45.61 %

Source : Summary of Trafic Data for Punjab Highways Planning and Design Dircetorate Punjab Highway Department - Lahore, April, 1986.

For design purposes an average daily traffic volume of 100 commerical vehicles was adopted.

This also matched the general practice being followed for the design of Farm to Market roads in the Punjab. Traffic data for Sind and NWFP was not readily available. In Sind tne usual practice is to base the design of Farm to Market roads on the assumption of modest initial commercial traffic volume of only 25 vehicles per day. The C&W in NWFP feel that the new CRP roads will attract over 100 commercial vehicles per day which is their basic yardstick for designing rural roads.

5.2.4 Sub Grade Soil

The strength of the road subgrade is commonly assessed in terms of the CBR of the subgrade soil and is dependant on the type of soil, its density and its moisture content. The strength of the subgrade should be taken as that of the subgrade soil at a moisture content equal to the wettest moisture condition likely to occur in the subgrade after the road is opened to traffic. The following tests are generally carried out for determining the soil strength.

a) Soil classification
b) Strength characteristics in respect of the CBR values of the soil

c) Moisture Density relationship

Soil tests have been carried out for all systems except Marwat in the three Provinces. The results for Punjab and NWFP indicate that the average CBR value is about 8% though in some cases it is around 7%. To be on the safe side the lower figure of 7% has been adopted for design purposes.

In the case of Sind Province CBR values are comparatively lower but the average daily traffic (ADT) is expected to be much lower, and the two factors will tend to neutralize each other. As such the same CBR value of 7% has been adopted for Sind as well.

5.2.5 Pavement Composition

Natural earth tracks can neither support modern wheel loads nor provide an adequate wearing surface. A pavement made up of stronger materials is, therefore, required on top of the soil in order to distribute the wheel loads adequately and to provide the necessary wearing surface.

The following design parameters have thus been adopted to arrive at the pavement design :

i) Design life of road 10 years

ii) Average daily traffic 100 commercial vehicles

iii) Average traffic growth rate 7%

iv) Average CRB value 7%

As per road note 31 "A guide to the structural design of bitumen - surface roads in tropical and sub-tropical countries" issued by "Overseas Unit Transport and Road Research Laboratory United Kingdom" the pavement thickness that has been arrived at is 12" consisting of 6" sub base, 6" base course and a bitumen surface dressing. The design details are given in App. 5.1.

According to road note 31 the minimum thickness of sub base of 4 inches is to be used with subgrades of CBR 8% to 24% while the base course is maintained at 6 inches. The Consultants, to be consistant, recommend adopting a uniform thickness of 12 inches for all roads. This thickness will take care of the lower CBR values and offer an added measure of structural safety in the event of increased traffic.

For surface dressing a standard, lighter specification of triple surface treatment using 67 Lbs of bitumen and 7.5 cft. of crushed stone per 100 sq.ft. of paved surface has been found adequate for Farm to Market roads in the Punjab. The same specification has been adopted for the canal roads in the three Provinces for the initial construction. As future traffic patterns develop and are assessed the road surface may be strengthened accordingly.

In the case of the subgrade the top three feet will be compacted to 95 percent standard AASHO maximum dry

density. The lower layer will be compacted to 85 percent standard AASHO dry density. The sub base will be compacted to 100 percent standard AASHO density. The base course will be water bound macadam compacted to 100 percent standard AASHO density.

Brick edging 3 inches wide and 9 inches deep, will be used along both edges of the metalled portion before laying the base course. The brick edging will protect the road edges from breaking under the movement of the traffic particularly if the shoulders are not well maintained. The top width of the road formation will vary from 24 feet to 32 feet with embankment side slopes of 2:1.

Specifications and construction criteria are detailed in Appendix 5.2.

5.3 General Cross Sections - Geometric Design

All roads considered by the Consultants have been designed and estimated to conform to current DOH specifications.

5.3.1 Alignment

The road alignment to be followed will be generally the alignment of the existing canals except in certain cases where it may have to be changed because of special site conditions such as thick rows of trees etc.

In the case of other connecting links the existing

katcha tracks will be used as far as possible with suitable modifications to minimize the cost of additional land acquisition.

5.3.2 Cross - Slopes

Because of the dowel on the canal side of the road, for the safety of traffic, cross slopes will be provided towards the outer edge of the canal bank for free drainage of rain water. Normally a 4% cross slope is provided in the shoulders and 2% in the paved portion.

5.3.3 Formation Width

A formation width of 28 ft to 32 ft has been proposed for the roads to be built in Punjab and Sind. Because of intensive irrigation, the high cost of irrigated lands and the cash crops raised in NWFP it may not be possible to maintain a formation width of 32 ft. It is particularly so because land cultivation and private settlement has encroached on the existing canal right of way and there may not be adequate land left to maintain the optimum road width. A formation width varying from 24 ft to 28 ft has. therefore, been adopted for roads in NWFP. In exceptional cases it is 18 ft.

5.3.4 Pavement Width

The 12 ft. width of the road pavement recommended is the accepted standard of the DOHs for single lane paved

roads.

Typical cross sections are given in Figures 1 to 13 in Volume II.

5.3.5 Embankment Slopes

Following current DOH practice and specifications embankment slopes will be 2:1.

5.4 Structures

5.4.1 Existing Structures

The existing structures along the canal banks such as head regulators, outlets, syphons, acquaducts, cross-drainage works and water course crossings need remodelling, strengthing and in some cases complete reconstruction.

The canal bank and link roads have been surveyed and all the existing structures listed. Where necessary new structures have been noted separately for each road. The cost for all structures has been estimated on a lump-sum basis for each different type of structure for each road and is tabulated in the detailed cost estimates. The cost figures used are based on the experience of the Consultants for similar structures.

5.4.2 New Vehicular and Pedestrian Crossings

The PIDs have provided pedestrian crossings over the

canals to facilitate the movement of pedestrians and cattle across the canals. These foot bridges were constructed a long time ago and, with the passage of time and the development of agriculture, have become in adequate to serve the new population centers. In certain cases the land owners and farmers living on one side of the canal have their land holdings on the other side necessitating pedestrian and cattle movement across the canals at many places where no foot bridges exist. The site inspections have revealed that at many places the local inhabitants have provided improvised foot bridges by laying large tree trunks across the canals. These improvised pedestrian crossings are not only dangerous but also very inconvenient both for the people and the cattle. Proper foot bridges are needed to replace these crude crossings (estimates and layout are given in App.5.3). System-wise detail of foot bridges, their location and costs are given in App. 5.3 A.

Tractor trolleys have become very common in the rural areas and their number is increasing daily. It will be necessary to provide more vehicular bridges as well as foot bridges. Estimates for additional crossings have been made separately over and above the estimates for the roads.

5.4.3 Buffalo Ghats

One of the most damaging forces contributing to the

rapid deterioration of the canal banks is the hoof action of cattle and water buffalo as they climb up and down the banks. Although the use of the canals for this purpose is prohibited by law it will be impossible to enforce and the best that can be hoped for is to restrict the buffalo access. Where cattle are permitted to enter the canals indiscriminately the PIDs must require the farmers/owners to help repair the banks and help maintain the efficiency of the canal.

The main points of cattle access are readily identified by site inspection and occur principally near villages or large farms or on routes between pastures lying on opposite sides of the canal. The slope design of the canal banks is too steep for the cattle to negotiate easily and so, through constant use, the bank is gradually worn down to a slope that is easier for them to climb. In an effort to restrict their access and protect the canal banks and roads some provision must be made to control their movements.

There are two possibilities : a permanent or a semi permanent ghat both with guides that would tend to direct cattle toward the approved entry/exit point. (Ref. PRC/Checchi Inc: Operations and Maintenance Manual, Rehabilitated Canals, General Instructions, 1986).

Semi Permanent Ghat

The easiest and least expensive ghat is simply to widen the canal bank decreasing the bank slope to 3:1 or 4:1 on both the canal and farm side. This will have the effect of moving the road alignment further from the canal and may require the acquisition of more right of way. This type of ghat is not suitable for built up areas.

Periodic maintenance will be required particularly during the rainy season to ensure the slopes are maintained and the embankment material is not carried into the canal.

The additional construction costs would be minimal limited to the extra cost of the embankment for the width of the ghat and any extra right of way required. Estimate and layout are given in App. 5.4.

Permanent Ghat

A more lasting and effective solution will be to construct these ghats as permanent structures using bricks to pave the 3:1 or 4:1 slopes. These pucca ghats may be modified to incorporate bricks set on edge at intervals, which will give the cattle better traction, or steps with a width of 2.5 feet and a 6 inch riser.

To prevent the cattle wandering off the pucca ramps brick walls will be required along the ramp edges to

guide the cattle in and out of the canals. The maximum ghat width recommended by PRC/Checchi is 50-60 ft. If larger herds of cattle are to use the ghat then two ghats separated by a 30-40 ft. pucca median may be preferable.

Construction costs for this type of structure is higher than for the semi permanent ghat but maintenance will be lower and it is more suitable for built up areas particularly if the "step type" is used. Although maintenance is expected to be lower damaged or dislodged brick must be repaired or replaced promptly to prevent accelerated deterioration due to hoof and water action. Estimate and layout are given in App. 5.5.

CRP Requirement

The need for buffalo ghats was assessed for each proposed road during the site surveys and an appropriate number of ghats have been included in the CRP project estimate. The location, type of ghat, and estimated cost are tabulated in App. 5.6.

5.5 Shouldering

The road design incorporates a 12 ft metalled surface and in most cases between 6ft and 10 ft shoulders on each side. Where buildings or water courses prohibit extending the right of way some reaches may have no shoulder at all for very short distances.

The metalled surface will permit vehicles to pass keeping two or more wheels on the metalled surface. The wheels that are off the metalled surface however will be on the compacted embankment. This part of the road bed has substantially less shear strength than the metalled portion particularly as the superimposed load nears the edge of the embankment (inland side). The possibility of shoulder failure will become more critical as commercial traffic increases especially if the larger heavier tractor trailers begin to use the canal roads. It is essential therefore that the shoulders are compacted to an average relative density of 98% as measured in random tests throughout the length and width of the shoulders.

Although the reduced embankment slope (2:1) will give added support to the embankment and reduce erosion due to runoff the shoulder surface and edges must be kept repaired and groomed to reduce accelerated deterioration due to rutting and potholing. Much of the maintenance and repair can be done using local labour and plate compactors but in instances of severe shoulder break-down construction crews and equipment may be required to repair the embankment properly.

The shoulder maintenance can be reduced substantially by treating the shoulders with one of several stabilizers. Initially, of course, the cost of the shoulder treatment

is high but the savings in routine maintenance and the extended shoulder life before rebuilding will more than pay the additional cost. Depending an the soil conditions three types of shoulder surface treatments are recommended :

1. Calcium Chloride - dry, easy to handle, effective but requires continuous replacement (annually), usually inexpensive, works well in silty clays.
2. Asphaltic Primer - more expensive, easy to apply with spray truck, longer time between reaplication, because it tends to flow it works better in granular soils.
3. Soil Cement - most expensive, requires higher technical skills and equipment, close supervision and quality control, application requires soil analysis and mix design, properly applied it lasts longer and has the least maintenance, will not work in soils with high salinity.

5.6 Slope Protection

The canal road embankments have been designed with a 2:1 slope which is a Highway Department Standard, rather than the original 1.5:1. The flatter slope will slow the

rate of runoff reducing the amount of erosion. The surface however cannot be left without some stablizing and protective cover.

Trees offer visual and protective benefits to the roads but if planted at the top of the bank may cause higher O and M costs for pruning and root control and are a potential safety hazard. If planted at the foot of the embankment they are aesthetically pleasing and help to strengthen the toe of the slope however they offer little protection to the surface of the slope.

The embankment slopes should be planted with a ground cover that has an intense root system, is fast growing but limited in height at maturity to (say) 24 inches, is drought resistant, is not appealing to buffalo, is pleasing to look at, and is economical.

Local grasses are an obvious choice and may be placed in plug form using manual labour. Grass however may encourage cattle to forage on the slopes causing rapid wear and tear.

Two local plants that may be planted using cuttings are sarkanda and paharri kikar. Sarkanda is fairly dense and will spread quickly. It has a ready market as fodder and so may be held in check as farmers cut it for their livestock. Paharri kikar is a more dense shrub growing to about 3 m. It would serve a dual purpose keeping the cattle off the slope on the one side and acting as a

safety net for errant vehicles on the other. In areas of extreme erosion or where instant protection is required sodding may be the best choice although it is too expensive to be considered for all the slopes. Within the framework of "living" slope protection local agriculturists have no recommendations that meet all criteria but the three suggested meet at least four of the six requirements.

5.7 Drainage

Efficient road drainage is very important because it extends life of the road and reduces O and M. The roads will be built primarily over the canal banks and, because of the dowel towards the canal side, the rain water will have to be drained towards the outer edge of the banks. For this purpose suitable cross slopes will be provided. Normally 4% cross slope is provided for the shoulders and 2% for the paved portion. The canal road banks will have a 2:1 slope to minimize damage from the flow of rain water. It will be desireable to reinforce and protect the side slopes by growing some grass or other suitable ground cover as previously discussed.

Wherever the banks are very high in the case of main canals and branches it would be desireable to treat the shoulders with an RC-70 asphalt (2.71 kg/sqm) or a soil/cement to avoid erosion of the shoulders by

rainwater thus preventing possible damage to the canal and road banks. This would, however, add considerable cost to the cost of metalling of canal banks therefore the current practice in the case of provincial and rural roads is to leave the shoulders without any treatment. If the shoulders are properly compacted and well maintained the treatment of shoulders may be deferred for the present to minimize the cost of the project.

Where roads are built at a lower level along the canal bank, longitudinal katcha catch water drains and cross drainage in the form of culverts will be necessary. Where the roads pass through built-up areas pucca drains will be needed.

6. CANAL ROAD COSTS

6.1 Construction Cost Estimates

As stated earlier in section 5 of this report the roads have been proposed as bituminous flexible pavements. A pavement width of 12 ft. has been adopted for all roads recommended by the Consultants. Similarily a pavement thickness of 12 inches, consisting of 6 inches sub-base and 6 inches base plus triple surface treatment using bitumen and crushed stone aggregate, has been adopted for all roads. The earthwork quantities for each road have been computed separately after taking into account the cross-sections as measured in the field for all channels (including Phase I, II and Balance). Survey firms/parties were engaged in the three provinces and cross-sections were taken every two miles or at places of significant topographic change.

A large number of compaction tests of the existing canal banks proposed for metalling have also been done in the three provinces. The results of the tests invariably show that the compaction of existing banks is less than the 95% (modified AASHO, maximum dry density) required for the road embankments.

To meet standard DOH specifications will require that the top 3' of the embankment is compacted to 95%. Recognizing that excavation of the top 3' of the canal

embankment, particularly if the canal is running at FSL or greater, may weaken the structure to the point of breaching the Consultants recommend :

1. Any excavation should be limited to an amount that can be excavated, replaced and compacted in one day.
2. Excavation should be limited to 2' relying on the self propelled compactors to compact the bottom 1'.
3. At the discretion of the engineer excavation may be limited to 1' and extra fill may be brought in and compacted to meet specifications although this will increase the embankment height and cost and may mean the acquisition of more right of way.

The estimate assumes a 2' excavation with subsequent replacement and compaction to 95 %.

In Punjab average leads for carriage of road materials such as sub-base, base and crushed stone chippings for surface dressing have been computed using the shortest routes from Sikhanwali stone quarry in Sargodha district for the different canal systems. The cost estimates have been worked out for each road separately taking into account the length of road, the earth work involved and the road structures requiring remodelling. Similarily estimates have been computed for the different roads in Sind and NWFP on the basis of the nearest stone quarries.

Separate estimates have been worked out for the metalling of the banks of Main Canals, Branches, Distributories / Minors, Drains and Connecting Links. The thickness and width of pavement remains the same in all cases. A formation width of 32 ft. has been adopted for Main Canals and Branches in Punjab and Sind. In the case of distributories and minors the formation width has been adopted as 32 ft. where the bank height is more than 5 ft. For banks up to 5 ft. in height the formation width has been reduced to 28 ft. This has been done firstly to economise on cost and secondly because the right of way is generally less than that available along Main Canals and Branches. A reduced formation width of 28 ft. has been adopted in the case of connecting links and drains.

The break up of total estimated cost system-wise and phase-wise for Punjab, Sind, and NWFP is given in Tables 6.1, 6.2 and 6.3 respectively. The estimates have been framed using unit prices based on the experience of the Consultant's engineers in the three Provinces. Cost estimates of Jhang Branch system have been given in Appendix 6.1 (vol II) for illustration purposes.

6.2 Cost Escalation

ISR Phase-II will be a 5 year programme from 1988 to 1993. The construction of roads over the canal banks will also be spread over a period of 5 years. It is,

Table 6.1

PUNJAB

Total Estimated Cost
System-wise, Phase-wise

S.NO	IRRIGATION SYSTEM	COSTS (Million Rupees)													
		MAIN CANAL			BRANCH CANA			DISTRIBUTORIES AND MINORS			DRAINS			Other links	Total
		Phase I	Phase II	Balance	Phase I	Phase II	Balance	Phase I	Phase II	Balance	Phase I	Phase II	Balance		
1.	Jhang Branch	0.00	0.00	0.00	32.52	0.00	13.67	61.61	8.93	19.43	0.00	11.44	0.00	0.39	147.99
2.	Gogera Branch	0.00	0.00	0.00	0.00	35.13	2.96	5.16	10.99	21.89	0.00	0.00	27.81	2.54	106.48
3.	Depalpur Canal	0.00	11.39	88.16	0.00	0.00	0.00	20.43	40.92	115.60	0.00	0.00	0.00	8.87	285.37
4.	Mailsi Canal	0.00	0.00	30.35	11.10	0.00	16.59	39.84	3.99	91.70	0.00	0.00	0.00	32.13	225.70
	Total	0.00	11.39	118.51	43.62	35.13	33.22	127.04	64.83	248.62	0.00	14.54	27.81	43.93	765.54

Source : Consultant's Estimate
Appendix 6.1, Example used for Text.
Detail in Back up Files.

Say 766 million Rupees.

Table 6.2

SIND

Total Estimated Cost
System-wise, Phase-wise

S.NO	IRRIGATION SYSTEM	COSTS (Million Rupees)													
		MAIN CANALS			BRANCH CANA			DISTRIBUTORIES AND MINORS			DRAINS			Other links	Total
		Phase I	Phase II	Balance	Phase I	Phase II	Balance	Phase I	Phase II	Balance	Phase I	Phase II	Balance		
1.	Ghotki Feeder	0.000	0.000	26.897	0.000	41.063	14.943	0.000	26.658	44.702	0.00	0.00	0.000	14.185	168.448
2.	Rohri Canal	0.000	0.000	0.000	0.000	0.000	0.000	0.000	50.343	19.413	0.00	0.00	0.000	7.110	76.866
3.A	Jamrao Canal	18.064	20.352	0.000	0.000	0.000	0.000	0.000	24.168	0.000	0.00	0.00	0.000	5.812	68.396
3.B	Mithrao Canal	28.412	60.065	16.857	0.000	29.574	0.000	0.000	35.535	0.000	0.00	0.00	0.000	0.000	170.443
4.	Nasir Canal	0.000	17.453	0.000	0.000	0.000	0.000	0.000	15.111	6.272	0.00	0.00	0.000	6.051	44.887
5.	Dadu Canal	0.000	31.673	0.000	0.000	0.000	0.000	0.000	31.123	0.000	0.00	0.00	10.804	5.473	79.073
	Total	46.476	129.543	43.754	0.000	70.637	14.943	0.000	182.938	70.387	0.00	0.00	10.804	38.631	608.113

Source : Consultant's Estimate
Detail in Back up files

Say 608 million Rupees.

TABLE 6.3

N.W.F.P

Total Estimated Cost
System-wise And Phase-wise

S.NO.	IRRIGATION SYSTEM	Districts	COSTS (in Million Rupees) MAIN CANALS Phase I	MAIN CANALS Phase II	MAIN CANALS Balance	BRANCH CANALS Phase I	BRANCH CANALS Phase II	BRANCH CANALS Balance	DISTRIBUTORIES AND MINORS Phase I	DISTRIBUTORIES AND MINORS PhaseII	DISTRIBUTORIES AND MINORS Balance	DRAINS	Other links	Total
1.	Kabul River Canals	Peshawer	0.000	3.322	13.508	0.000	0.000	0.000	0.000	0.000	2.328	0.000	0.000	19.158
2.	Paharpur Canals	D.I.Khan	0.000	0.000	21.432	0.000	0.000	0.000	0.000	0.000	0.000	0.000	0.000	21.432
3.	Marwat Canals	Bannu	0.000	0.000	0.000	0.000	0.000	0.000	0.000	13.154	8.671	0.000	0.000	21.825
4.	Upper Swat Canals	Mardan	0.000	0.000	0.000	0.000	15.548	31.739	0.000	10.073	21.126	0.000	1.247	79.733
5.	TOTAL		0.000	3.322	34.940	0.000	15.548	31.739	0.000	23.227	32.125	0.000	1.247	142.148

Source : Consultant's Estimate
Detail in Back up files

Say 142 Million Rupees.

therefore, necessary to make suitable provisions for escalation in the cost estimates. On the basis of experience in long term projects a percentage phasing of the CRP has been assumed :-

Ist Year	15%
2nd Year	20%
3rd Year	25%
4th Year	25%
5th Year	15%

An escalation at the rate of 6.5% per annum, as approved by GOP Planning Commission, has been proposed to account for the general inflation in the rates of labour and materials. Normally escalation is not permitted for the 1st year but since the project is scheduled to commence from July 1988, more than a year later, escalation for the 1st year has also been provided.

Thus the escalation rates added to the cost estimates are :

1st year	15% progress	6.5%
2nd year	20% progress	13.0%
3rd year	25% progress	19.5%
4th year	25% progress	26.0%
5th year	15% progress	32.5%

Considering the suggested rates of annual progress and adding the approved escalation over the construction

period of five years the escalated costs are :

Punjab	Rs.	918	Ref. Table 6.4
Sind	Rs.	729	Ref. Table 6.5
NWFP	Rs.	170	Ref. Table 6.6

6.3 Annual Operating and Maintenance Costs

6.3.1 Roads - Punjab

The present yardstick for the maintenance and repairs of metalled roads in the Punjab was sanctioned by the Finance Department on 23.02.86 as Rs.10,000 per km per 10 feet metalled width. The details are given in Tables 6.7 to 6.8. An additional 9% of of this amount is sanctioned for special repairs. Thus the total amount sanctioned for annual repairs and special repairs per 10 feet metalled width per mile is Rs.16,000/- and Rs.1,440/- respectively. For 12 feet metalled width the cost of annual maintenance and special repairs per mile will be Rs.19,200/- and Rs.1,728/- respectively. This amount includes temporary gangs for three months of the rainy season. It also includes periodical resurfacing with a cycle of 4 years. For day to day maintenance road gangs at the rate of 1 man per two miles are sanctioned separately which are paid out of establishment charges.

The total length of canal roads proposed in the Punjab is 596 miles. These roads are planned to be completed in a period of 5 years. According to the existing contrac-

TABLE 6.4

ESCALATED PROJECT COST (PUNJAB)

SR.NO.	YEAR	PERCENTAGE PROGRESS	RATE OF ESCALATION	ESCALATED COST (IN MILLION RUPEES)
1.	IST YEAR (1988-89)	15 %	6.5 %	122.370
2.	2ND YEAR (1989-90)	20 %	13.0 %	173.120
3.	3RD YEAR (1990-91)	25 %	19.5 %	228.840
4.	4TH YEAR (1991-92)	25 %	26.0 %	241.290
5.	5TH YEAR (1992-93)	15 %	32.5 %	152.240

TOTAL ESCALATED COST = Rs. 917.86 MILLION.
SAY Rs. 918 MILLION RUPEES.

Source : Consultant s Estimate

BEST AVAILABLE DOCUMENT

TABLE 6.5

ESCALATED PROJECT COST (SIND)

SR.NO.	YEAR	PERCENTAGE PROGRESS	RATE OF ESCALATION	ESCALATED COST (IN MILLION RUPEES)
1.	IST YEAR (1988-89)	15 %	6.5 %	97.130
2.	2ND YEAR (1989-90)	20 %	13.0 %	137.410
3.	3RD YEAR (1990-91)	25 %	19.5 %	181.640
4.	4TH YEAR (1991-92)	25 %	26.0 %	191.520
5.	5TH YEAR (1992-93)	15 %	32.5 %	120.840

TOTAL ESCALATED COST = Rs. 728.54 MILLION.
SAY Rs. 729 MILLION RUPEES.

Source : Consultant's Estimate

BEST AVAILABLE DOCUMENT

TABLE 6.6

ESCALATED PROJECT COST (NWFP)

SR.NO.	YEAR	PERCENTAGE PROGRESS	RATE OF ESCALATION	ESCALATED COST (IN MILLION RUPEES)
1.	IST YEAR (1988-89)	15 %	6.5 %	22.840
2.	2ND YEAR (1989-90)	20 %	13.0 %	32.090
3.	3RD YEAR (1990-91)	25 %	19.5 %	42.420
4.	4TH YEAR (1991-92)	25 %	26.0 %	44.730
5.	5TH YEAR (1992-93)	15 %	32.5 %	28.220

TOTAL ESCALATED COST = Rs. 170.30 MILLION.
SAY Rs. 170 MILLION RUPEES.

Source : Consultant's Estimate

BEST AVAILABLE DOCUMENT

Table 6.7

YARD STICK FOR ANNUAL MAINTENANCE AND REPAIR OF ROADS IN PUNJAB

Approved Yard Stick for 1986-87

Unit = One Km
Metalled width of road = 10'-0"

S.No.	Particulars	Quantity	Unit	Rate	1986 Amount	Remarks
A)	GENERAL REPAIR AND MAINTENANCE					
i.	Establishment					
	Beldar for 3 months during rainy season =2/3 x3x0.62137= 1.25 Nos	1.25 (Indexation Pay)	Nos. +13.596 of Basic pay of Rs.440/- (528+59)	Rs.587/- each+	Rs. 660/- Rs. 74/- --- Rs. 734/- ---	The Yardstick for 1985-86 was approved @ Rs.8,829/- per K.M. It has been revised by Finance Department to Rs. 8919/ Km for 1986-87, vide C & W memo No. SO(H)III-3(8)/78(P) dt.23.2.86
ii.	GENERAL OPERATION AND ROAD STRUCTURE					The cycle of re-surfacing is 5 years.
a.	Km,1/2 Km stones, sign posts,notice, boards, boundry pillars, painting traffic lanes, etc.		Km	@ Rs.280/- per Km	Rs.280/-	The fresh proposal is 4 years cycle.
b.	Shoulder, retaining walls, road side catch water drains, renewal of land slopes, watching etc.		Km	@ Rs.520/- per Km	Rs.520/-	
c.	Pagries and tools, such as basket, kassi, Jandies, Pick axes, showel cotton dori etc.		Km	@ Rs.100/- per Km	Rs.100/-	
d.	Traffic count Programme.		Km	@ Rs.55/- per Km	Rs.55/-	
iii.	ROAD INSPECTION					
a.	Running charges of vehicles for inspection.		Km	@ Rs.170/- per Km	Rs.170/-	
	Total General Repairs & Maintenance				Rs.1859/-	

Source : Punjab Finance Dept. per
C & W memo No. So (H) III - 3(8)/78(P), 23.2.86

BEST AVAILABLE DOCUMENT

Table 6.8

YARD STICK FOR ANNUAL MAINTENANCE AND REPAIR OF ROADS IN PUNJAB

Approved Yard Stick for 1986-87

Unit = One Km
Metalled width of road = 10'-0"

S.No.	Particulars	Quantity	Unit	Rate	Amount	Remarks
		(2)				
B)	PATCH WORK AND RESURFACING					
i.	Patch work					
a.	Material					
	Bajri $\frac{143 \times 0.62137}{35.3147}$ = 2.52 Cu.M	2.52	Cu.M	Rs.230/- per Cu.M	Rs. 580/-	
	Bitumen $\frac{0.70 \times 1016}{1.609344}$ = 441.93 Kg.	442	Kg	Rs.4/50 per Kg	Rs. 1989/-	
b.	Equipment & fuel Equipment and fuel and handling of materials for patch work etc.		Km	Each	Rs. 170/-	
				Total B(i)	Rs.2739/- say Rs.2740	
ii.	RESURFACING (4 years cycle)					
a.	Material					
	Bajri $\frac{143 \times 0.62137}{35.3147 \times 4}$ = 5.53 Cu.M	5.53	Cu.M	Rs.230/- per Cu.M	Rs. 1271/-	
	Bitumen $\frac{0.70 \times 1016}{1.609344 \times 4}$ = 741.79 Kg.	742	Kg	Rs.4/50 per Kg	Rs. 3339/-	
b.	Labour for resurfacing (1/4 length)					
	$\frac{1000 \times 3.048}{4}$ = 762 SQ.M	762	Sq.M	@ 0.80 per Sq.M.	Rs. 610/-	
	Diversion and traffic control Diversion and traffic control during resurfacing 1/4 length.	0.25	km	@ 720/- per Km.	Rs. 180/-	
				Total B(ii)	Rs.5400/-	
	Total Patch work & resurfacing-- B(i) + B(ii)		Rs. 2740+ Rs. 5400/ = Rs. 8,140			
	Total General repairs					
	Total Annual Repairs (A&B) Rs. 1859/- +8140/-			= Rs. 9999/- /km	Say 10,000/-	
				Sd/- O.S.D(Tech)	Sd/- DD(South)	Sd/- DDII(N)

Source : Punjab Finance Dept. per
C & W memo No. So (H) III - 3(8)/78(P), 23.2.86

BEST AVAILABLE DOCUMENT

tual requirements in the Provincial Highway Department's the contractor is responsible for the maintenance of the newly completed road for a period of one year from the date of its completion. It has been assumed that the phasing of the progress of the canal roads project will be :

1st	year	15%
2nd	year	20%
3rd	year	25%
4th	year	25%
5th	year	15%

During the first year though the project expenditure may be 15% of the total cost, the physical progress in terms of completed road mileage will be actually less because the roads will be at different stages of construction. The same will be the position during the subsequent years. Thus the operational and maintenance costs during the first three years will be considerably less. These costs will increase from year to year till the operational and maintenance costs for the entire length of 596 miles will become operative in the seventh year.

The total annual operating and maintenance budget in the case of Punjab Province for the suggested 596 miles of canal roads will be Rs. 12.47 million, calculated using the 1986 yardstick, with an additional cost of permanent gangs. Taking one road gang of 5 gang-men and one head

man per ten mile length there will be 60 such gangs. The total annual cost of these gangs will be about Rs. 3.56 million. Thus the overall annual operational and maintenance cost of the completed road network with the present approved maintenance yard stick in the Punjab will be about Rs. 16.03 million.

6.3.2 Yardstick for Annual Maintenance of Canals in Punjab

The following yardstick was sanctioned by the Finance Department in February, 1982 for the annual maintenance of various types of canals :-

Main Canal and Branches

i) up to 6,000 cusecs discharge Rs.9,500/- per mile.

ii) More than 6,000 and up to 10,000 cusecs discharge Rs.10,500 per mile.

iii) More than 10,000 cusecs discharge Rs.13,000 per mile.

Link Canals

i) up to 10,000 cusecs discharge Rs.9,900/- per mile.

ii) More than 10,000 cusecs discharge Rs.15,000/- per mile.

Lined Channels

Link canals, main canals and branches Rs.15,000 per mile.

Distributories-Minors and Sub-Minors etc.,Rs.3,500/- per mile.

6.3.3 Yardstick for Annual Maintenance of Roads in Sind

The yardstick for annual maintenance of roads in Sind as revised in 1983 is Rs.16700 per mile per 10 ft. metalled width. The details are given in Tables 6.9, 6.9.1, 6.9.2 6.9.3 and 6.9.4 These tables also show a comparison of the yard sticks for 1980, 1982 and 1983.

6.3.4 Yardstick for Annual Maintenance of Canals in Sind

The presently approved yard stick for annual maintenance of canals, drains and flood bunds in Sind is given in Table 6.9.5. The total amount sanctioned per mile of canals, drains and flood bunds is Rs.16731, Rs. 8757 and Rs.25000 respectively.

6.3.5 Yardstick for Annual Maintenance of Roads in NWFP

Approved yard stick for annual maintenance and repair of 10 ft. roads per mile in NWFP is :

	Sub Head	Blacktop roads	Shingle roads	Earthen roads
1.	Resurfacing	5263	--	--
2.	Patch repairing	1758	--	--
3.	Reshingling	--	2493	--
4.	Structure repair	629	370	276
5.	Labour for rainy season	570	570	570
6.	Miscellaneous	786	231	92
	Total	9006	3664	938

Table 6.9

YARDSTICK FOR M&R TO ROADS IN SIND IN THE YEAR 1983

Sr.No.	Item.	Cost for 1980		Cost for 1982	Cost for 1983	
Sub- Head-I	Establishment.	Rs. 2837.00		Rs. 3370.00	Rs. 5150.00	
Sub- head-II	Road Structure.	Rs. 596.00		Rs. 795.00	Rs. 834.00	
Sub- head-III	Patch repair work & resurfacing.	Rs. 6554.00	7828	Rs. 7720.00	Rs. 9650.00	11584
Sub- head-IV	General Operation.	Rs. 678.00		Rs. 1045.00	Rs. 1100.00	
	Total :	Rs. 10665.00		Rs. 12930.00	Rs. 16734.00	
	Say :	Rs. 11000.00		Rs. 13000.00	Rs. 16700.00	

Source : Sind Department of Highways.

11550.00 Per mile M & R.

5150.00 Per mile Work Charge Estt.

Table 6.9.1

STATEMENT SHOWING THE REVISION OF YARDSTICK FOR ANNUAL MAINTENANCE FOR 10 FT. WIDE BLACK TOP ROAD BY UPDATING THE YEAR 1980-83

S.No.	DESCRIPTION	APPROVED QUANTITY	UNIT	APPROVED RATES FOR 1980		APPROVED RATES FOR 1982		PROPOSED RATES FOR 1983			REMARKS
I				RATE	AMOUNT	RATE	AMOUNT	QUANTITY	RATE	AMOUNT	
1.	Road Inspector B.C. 540-20-940 AV:proposed pay 740	1/30x12x2/5 Nos.	E/P.M.	407.00	162.80	470.00	188.00	2/5 Nos	740.00	296.00	Increase in wages as per existing scale
2.	Conveyance allowance	1/30x12=2/5 Nos.	E/P.M.	10.00	4.00	10.00	4.00	2/5 Nos	10.00	4.00	-do-
3.	Mate B.C. 460-12-700 AV:proposed pay 580	1/10x12=6/5 Nos.	E/P.M.	286.00	343.20	365.00	438.00	6/5 Nos	580.00	696.00	-do-
4.	Belder for Rainy seasons B.C. 440-10-640 AV:proposed pay 440	2/3x3= 2 Nos.	E/P.M.	330.00	660.00	340.00	680.00	2 Nos	440.00	880.00	-do-
5.	Belder. B.C. 440-10-640 AV:proposed pay 540	1/2x2 = 6 Nos.	E/P.D.	275.00	1650.00	340.00	2040.00	6 Nos	540.00	3240.00	-do-
6.	Misc. T.A.	one mile	P.M.	12.00	12.00	15.00	15.00	1 mile	16.00	16.00	L.S.
7.	Pagries baskets	one mile	P.M.	12.00	12.00	15.00	15.00	1 mile	16.00	16.00	L.S.
					2844.00		3380.00			5148.00	
									Say Rs.	5150.00	

Source : Sind Department of Highways.

Summary Table 6.9.

BEST AVAILABLE DOCUMENT

Table 6.9.2

STATEMENT SHOWING THE REVISION OF YARDSTICK FOR ANNUAL MAINTENANCE FOR 10 FT. WIDE BLACK TOP ROAD BY UPDATING THE YEAR 1980-83

S.No. II	DESCRIPTION	APPROVED QUANTITY	UNIT	APPROVED RATES FOR 1980		APPROVED RATES FOR 1982		PROPOSED RATES FOR 1983			REMARKS
				RATE	AMOUNT	RATE	AMOUNT	QUANTITY	RATE	AMOUNT	
1.	Sub-Head-II (Road Structures).										
i)	Repairs to Bridge.	One mile	P.M.	119.63	119.62	163.00	163.00	1 mile	171.00	171.00	5% increase considered.
ii)	Repairs to Culverts.	-do-	-do-	80.02	80.02	109.00	109.00	-do-	114.00	114.00	-do-
2.	BUILDINGS.										
i)	Maintenance of I.N.S.R.I. Quarters and gong huts.	-do-	-do-	181.25	181.25	218.00	218.00	-do-	229.00	229.00	-do-
ii)	Retaining walls.	-do-	-do-	72.50	72.50	87.00	87.00	-do-	91.00	91.00	-do-
3.	MISCELLANIOUS ITEM										
i)	Painting & lettering miles & furlong stones	-do-	-do-	67.50	67.50	108.00	108.00	-do-	113.00	113.00	-do-
ii)	Painting sign Board and notice bearding.	-do-	-do-	33.75	33.75	54.00	54.00	-do-	57.00	57.00	-do-
iii)	Repair & White wash-ing Boundry pillars etc.	-do-	-do-	11.25	11.25	20.00	20.00	-do-	21.00	21.00	-do-
iv)	Replacement & repair of mile stones sign board furlong stones	-do-	-do-	22.50	22.50	36.00	36.00	-do-	38.00	38.00	-do-
					588.39		795.00			834.00	
				Say Rs.	588.00	Say Rs.	795.00		Say Rs.	834.00	

Source : Sind Department of Highways.

Summary Table 6.9.

BEST AVAILABLE DOCUMENT

Table 6.9.3

STATEMENT SHOWING THE REVISION OF YARDSTICK FOR ANNUAL MAINTENANCE FOR 10 FT. WIDE BLACK TOP ROAD BY UPDATING THE YEAR 1980-83

S.No. III	DESCRIPTION	APPROVED QUANTITY	UNIT	APPROVED RATES FOR 1980		APPROVED RATES FOR 1982		PROPOSED RATES FOR 1983			REMARKS
				RATE	AMOUNT	RATE	AMOUNT	QUANTITY	RATE	AMOUNT	
	Sub-Head-III (Patch repairs work & resurfacing)										
a)	Patch Repairs										
i)	Bajri.	160 Cft.	%cft	507.50	812.00	557.50	892.00	160 Cft.	585.00	936.00	5% increase considered.
ii)	Bitumen.	0.80 ton	ton	2000.00	1600.00	2400.00	1920.00	0.80 ton	3100.00	2480.00	above rate of Bitumen.
b)	Resurfacing 5th mile each year										
i)	Bajri. 125x1/5.	250 Cft.	%cft	507.50	1268.75	557.50	1394.00	250 Cft.	585.00	1463.00	5% increase considered.
ii)	Bitumen. 4.7x1/5=	0.94 ton	ton	2000.00	1880.00	2400.00	2256.00	0.94 ton	3100.00	2914.00	issue rate of Bitumen.
c)	Labour including equipment.										
	5280x10x1/5110560sft	10560 sft	%sft	8.50	897.60	10.00	1056.00	10560sft	14.75	1558.00	
d)	Diversion during resurfacing and Traffic control.	1/5 mile	mile	478.50	95.70	1000.00	200.00	1/5 mile	1500.00	300.00	5% increase considered.
					6554.05		7718.00			9651.00	
				Say	6554.00	Say Rs.	7720.00		Say Rs.	9651.00	

Source : Sind Department of Highways.

Summary Table 6.9.

BEST AVAILABLE DOCUMENT

Table 6.9.4

STATEMENT SHOWING THE REVISION OF YARDSTICK FOR ANNUAL MAINTENANCE FOR 10 FT. WIDE BLACK TOP ROAD BY UPDATING THE YEAR 1980-83

S.No. IV	DESCRIPTION	APPROVED QUANTITY	UNIT	APPROVED RATES FOR 1980		APPROVED RATES FOR 1982		PROPOSED RATES FOR 1983			REMARKS
				RATE	AMOUNT	RATE	AMOUNT	QUANTITY	RATE	AMOUNT	
	Sub-Head-IV (General Operation)										
1.	Shoulders earthwork and grading.	One mile	P.M.	199.37	199.37	229.50	229.50	One mile	241.00	241.00	
2.	Traffic lane painting and Maintenance.	One mile	P.M.	39.87	39.87	54.00	54.00	One mile	57.00	57.00	
3.	Maintenance and Repair of Equipment.	One mile	P.M.	159.50	159.50	290.00	290.00	One mile	305.00	305.00	
4.	Road vehicle running and Maintenance.	One mile	P.M.	199.37	199.37	362.50	362.50	One mile	381.00	381.00	
5.	Traffic count programme estt. and contigencies.	One mile	P.M.	79.75	79.75	109.00	109.00	One mile	114.00	114.00	
					677.86		1045.00			1098.00	
				Say	678.00	Say Rs.	1045.00		Say Rs.	1100.00	

Source : Sind Department of Highways.

Summary Table 6.9.

BEST AVAILABLE DOCUMENT

Table 6.9.5

SIND PROVINCE

MAINTENANCE YARD STICK FOR CANALS, DRAINS AND FLOOD BUNDS.

ITEM	QUANTITY	UNIT COST	YARD STICK PER MILE (Rs.)
EARTH WORK			
CANALS	10.0 Tcf/mi	347 Ps/Tcf	3470
DRAINS	8.0 Tcf/mi	226 Ps/Tcf	1808
FLOOD BUNDS	16.5 Tcf/mi	250 Ps/Tcf	4125
SEDIMENT REMOVAL			
CANALS	15.7 Tcf/mi	214 Ps/Tcf	3360
DRAINS	18.7 Tcf/mi	213 Ps/Tcf	3983
WEED REMOVAL			
DRAINS	20.9 Tcf/mi	12.5 Ps/Tcf	449
WORK CHARGED ESTABLISHED			
CANALS	6 M.M.	543 Ps/M.M.	3258
FLOOD BUNDS	24 M.M.	543 Ps/M.M.	13032
STRUCTURE REPAIR			
CANALS	4.3/mi	441 Ps/Structure	
DRAINS			
MISCLLANEOUS			
CANALS			4300
DRAINS			795
FLOOD BUNDS			6600
TOTAL CANAL YARD STICK			16731
TOTAL DRAIN YARDSTICK			8757
TOTAL FLOOD BUND YARD STICK			25000

Source : Sind Provincial Irrigation Department.

BEST AVAILABLE DOCUMENT

Regular gangs are in addition and are paid out of establishment charges.

(Source - Chief Engineer C&W Department, NWFP letter No. BW/1-5/83-84/14033-35/BA-II dated April 3, 1984 addressed to Secy. C&W Department NWFP)

6.3.6. Yardstick for Annual Maintenance of Canals in NWFP

There is reportedly no approved yardstick for annual maintenance of canals in NWFP.

6.4 Consultants Estimate of Road Operating and Maintenance Costs

Regardless of the level of construction of a road it will deteriorate rapidly without a competent scheduled maintenance programme. Unfortunately the maintenance of existing roads in Pakistan is not perceived by the voting public to be as beneficial as a new road consequently the political emphasis favours the construction of new roads rather than the maintenance of existing roads and as a result the G O Province grants for road maintenance are much less than they should be. Although the C and W s are unanimious that metalled roads are substantially less costly to maintain there are some who still favor shingle or water bound macadam roads.

The minimum travelled road surface for metalling is 12 ft. and, with shoulders, the overall width should be 28

to 32 ft. A shingle road has an overall width of 22 ft. and a water bound macadam 32 ft. with a nominal surfacing of 20 ft. and 12 ft. respectively. The subgrade in all cases must be built and compacted to the same specifications.

The metalled surface roads have the same basic construction of embankment and subbase and base course. The metalled surface treatment consists of three treatments of compacted bitumen and chips whereas the water bound macadam surface is stone dust spread on the base course and consolidated with applications of water and rolling until a firm smooth surface is obtained.

The shingle road surface is made up of 8" of river run gravels, usually 3/4 inch minus, that is placed directly on the earth embankment. The shingle is compacted with water and rollers. Because the shingle is made up of stone with rounded corners and the amount of fines in the mixture is uncontrolled the degree of compaction tends to be less than that attainable with other surfaces. As a result it is more easily disturbed by heavy vehicles and increased traffic thereby requiring more maintenance to retain the desired surface. Of the three Provinces NWFP alone has ready access to shingle but even there the cost has risen to 3.5 Rs./cft.

Extreme temperatures will dry the stone dust filler on the waterbound macadam surface. Traffic will quickly

loosen the stone dust and it will literably blow away however continuous attention and maintenance with water and compaction will help preserve the surface.

Table 6.10 summarizes the Consultant's estimates of the cost of a 32 ft. metalled road, a 22 ft. shingle road, and a 32 ft. water bound macadam road over a 10 year period. The annual maintenance costs are calculated in Appendices 8.9 A, B, and C. It has been assumed that the subgrade and base will have a residual value of 60% since they are expected to be built to current DOH specifications, especially regarding compaction and drainage. At the end of 10 years a decision must be made on the level of resurfacing or reconstruction required to meet the then current and projected traffic demands.

It has been assumed that the metalled road will require a complete surface treatment every 4 years and that the shingle road will be reshingled twice, once over a period of 4 years and the second time over a period of 6 years. A small transportation premium has been added to the cost of the shingle maintenance equipment to cover the higher cost of transport compared to the bituminous patching equipment. Overheads have been assumed at 15%.

Because NWFP is closer to the shingle supply it is reasonable to expect the O and M differential will be much greater in Punjab and Sind reflecting the higher transportation costs of shingle.

TABLE 6.10

COMPARISON OF METALLED, SHINGLED, AND WATERBOUND MACADAM ROAD COSTS - NWFP ANNUALIZED 10 YEAR COST RS/YEAR/MILE

	METALLED ROAD 32'x12' Surface	SHINGLE ROAD 22'x20' Surface	WATER BOUND MACA-DAM 22'x12' Surface
Reference	Ap.8.9A	Ap.8.9B	Ap.8.9C
INITIAL COST PER MILE	830000	664600	772500
RESIDUAL VALUE-10YR=60%	498000	398760	433500
AMOUNT TO AMORTIZE	332000	265840	289000
ANNUALIZED COST OF CONSTRUCTION	33200	26584	28900
O AND M (Ref. 8.9A, 8.9B)	20212	64827	47848
OVERHEADS @ 15%	1706	2052	2900
CONTACT MAINTENANCE	4000	6000	6000
TOTAL	59118	97844	85648
Say	59100	97800	85600

Table 6.10 clearly illustrates that the O and M of a metalled road is significantly less than the O and M for either a shingle or waterbound macadam road.

The maintenance of roads is a very localized activity. It is the Consultants opinion therefore that the district organisations will be more sensitive to the maintenance requirements than will a centralized

department. If the maintenance responsibility is at the local level and local labour and equipment is used in the maintenance programme a higher degree of performance may be achieved than if "outside" contractors are brought in.

Table 6.11 summarizes the latest published yardsticks for O and M for 10 ft. metalled roads and adjusts them to a 12 ft. metalled road by adding 20 %. The calculation has been done for both the published and the adjusted yardsticks. Inflation has not been included for the contract maintenance rate since it is current.

Relative to the Punjab yardstick the Consultants estimate may appear low but several factors contribute to the lower figure. The departmental yardsticks are based on their experience with existing roads. The new roads however will be built to a much higher standard, greater compaction in the base, subbase, and embankment, a more uniform quality in the metalled surface, flatter side slopes and improved drainage. If the specifications are met the maintenance will be less. The maintenance of deteriorated or substandard roads will always cost more than the maintenance of new well constructed road. In that context the published yardsticks are low.

The contract maintenance should be reduced because the amount of daily maintenance will be less allowing one

man to maintain (say) three miles instead of two. The length may be governed more by his unwillingness to travel further than on the physical effort required to maintain the road.

TABLE 6.11

SUMMARY O AND M YARDSTICKS FOR 10`
METALLED ROADS AS PUBLISHED
(adjusted to 12` road)

	PUNJAB	SIND	NWFP	EST.BY CONS.
Date Published	23.02.86	1983	03.04.87	04.87
Text Reference	6.3.1	6.3.3	6.3.5	Tab. 6.9.6
Total Published Rate 10' Road	23440	16700	9006	--
Annual Maintenance	19200		8425	20212
Special Maintenance	1728		1698	
Contract Maintenance	6000		684	4000
Sub Total	26928	20040	10807	24212
Overhead				1706
Total	26928	20040	10807	25918
Inflation allowance @ 6.5% *				
On published rate	24574	21483	10807	--
On adjusted rate	28288	25780	10807	25918
Road depreciation allowance	---- no allowance ----			33200
Total	28288	25780	10807	59118

* No inflation on maintenance contract.

If in fact the Provinces actually allocate the escalated funds shown in Table 6.11 enough money will be available for O and M in Punjab and Sind. Although NWFP road embankments are narrower the funds designated for maintenance are insufficient and deterioration will continue.

None of the Provinces have a sinking fund established for eventual grade reconstruction.

The Consultants TOR did not require an analysis of the O and M funding problems. It is widely recognized however that the GO Province O and M funding when added to the current local funding is inadequate to meet maintenance needs for existing roads. Before embarking on a programme of new road construction it is mandatory that a firm road maintenance funding programme is in place to give continued support to the CRP.

It may be that in the final negotiations the levels of government involved in the CRP and the going O and M cannot give the assurance of adequate financial support. If that is the case then perhaps it would be wiser to upgrade existing main roads rather than expand the road network and increase the tax burden to raise more funds for O and M. There is an upper limit to the miles of road that can be supported given the financial ability of the Provinces.

7. EQUIPMENT AND SUPPORT

7.1. Introduction

The deficiency in the transportation infrastructure is due in large part to an apparent shortage of serviceable construction equipment for both new road construction and the on-going maintenance of existing roads. While there are large numbers of new equipment in Pakistan they are poorly managed and under utilized. Too many older units are obsolete or lie unserviceable and derelict in various public and private sector storage yards with no evident plans to rehabilitate, scrap, or sell them. There is no single factor that is causing this breakdown in the equipment management system, rather, several causes appear to be at the root of the problem.

These include :

- no effective plan for the efficient deployment of existing equipment.
- no commitment to enforcing the existing equipment management system.
- a shortage of hard currency for offshore purchases of equipment, parts, and tooling.
- delays in parts ordering, shipping, customs clearance, and distribution that extend equipment down time.
- too many makes and models of equipment to permit the efficient stocking of parts and training of

proficient mechanical staff and operators.

- a lack of equipment operator supervision and training and general failure to understand the limitations of the equipment and the need for daily and preventive maintenance.
- AID programmes, grant and barter, that have not been structured to ensure the active and continuing support of the local equipment distributor. (e. g. warranty, service contracts, guaranteed trade-ins etc.)
- PID/DOH rental rates and unit prices that, even with premia are hopelessly out of date and unrealistic.

The TOR of the canal roads feasibility study do not provide for a detailed analysis of the total equipment capacity in Pakistan nevertheless some brief comments are appropriate.

A substantial part of many AID programmes includes the supply of equipment, parts and support products but the present equipment management systems and policies are incapable of ensuring that this equipment is fully utilized and maintained within acceptable standards. At some time in the near future the existing equipment management systems must be analysed and restructured to ensure that the optimum value is obtained from the AID programmes. PRC/Checchi are encouraging the development of such a system and running several pilot

projects to demonstrate effective equipment management.

A fundamental decision in the supply of equipment must be made for the long term benefit of Pakistan. Should the projects be designed using traditional methods or should more modern techniques and equipment be introduced?

The Consultants believe that the gradual change to more modern methods and machinery started in ISMP-I is desireable however to be successful several criteria should be observed :

- supply equipment that is versatile enough to be utilized at least 70% of the work season
- oversize the equipment and restrict its power or speed so it cannot work immediately to design capacity
- be certain the equipment has the right (size) attachments
- size equipment properly for the job it is intended to do, to be compatable with other equipment e.g. A 215 HP tractor is more than adequate as a pusher for a 14 cyd scraper
- supply equipment that meets GOP standardization criteria (too many manufacturers were represented in the ISMP - I equipment package)
- be willing to assist with extensive training and education using local trainers where possible. If

none are available develop a permanent school to train Pakistanis in equipment management

- supply adequate parts support over the life of the project not just at the beginning
- when the project is complete make provision to leave the equipment in good operating condition

7.2 DOH and PID Equipment Circle Review (Ref. App.7.1-7)

While the PID gives the appearance of being short of equipment in some areas there is in reality serviceable and new equipment standing idle. The low utility of PID equipment is a result mainly of inefficient planning and scheduling. PRC/Checchi have done extensive studies on the utilization and management of PID equipment in the four Provinces and have found that, in fact, the PIDs have excess capacity relative to their current ability to use the equipment.

For construction of the canal roads some of this excess capacity can be made available to the CRP at least on a part time basis. There are two active seasons for the PID, late July and August and September when breaching of the canals is common and December through March when desilting is usually done. During the former period equipment must be on standby for "fire fighting" and during the latter period most equipment is pressed into service to maximize canal cleaning during the brief canal shutdown. For the remaining 5 1/2 months as much

as 70% of the PID equipment could be made available to the CRP.

Not all of this equipment is suitable for road construction however and much of the equipment older than six years is unserviceable. Whether the unserviceable equipment will be refurbished in time for CRP use is as yet unknown due to the continuing shortage of spare parts, trained personnel and rebuild facilities. When estimating the availability of PID equipment for CRP use the Consultants considered any machine older than 6 years would have only 33% availablity and machines over 10 years 0.

The Consultant's also assessed the DOH equipment inventory as a possible supplementary source however as App. 7.6-8 indicates much of their equipment is unserviceable or of an age that it is also unsuitable for use on the CRP. In addition the DOHs informed the Consultants that all their serviceable equipment is committed to existing projects and would not be available for the CRP.

Much of the older PID/DOH equipment is unserviceable and kept in inventory as a source of parts to keep the rest of the fleet operational. While the economies of cannibalizing is open to argument it is, in this case, expedient since a shortage of both local and hard currency precludes access to new parts which must

usually be purchased offshore.

The shortage of local currency is partly attributable tc the funding structure of the PID/DOHs. Departmental revenue is obtained from two sources, a GOProvince annual (budget) grant and a percentage of the equipment rental revenues received from the private sector. The rental revenues are split by formula between the PID/DOH and GOProvince general fund. The difference between the operating expense and the retained portion of the rental revenue is made up by the annual grant. Unfortunately by just meeting expenses no reserve is built up to stock parts or purchase replacement equipment.

The Composite Schedule of Rental Rates, Punjab for example, was last updated and published in May 1982 and although an annual non compounding premium of 5% is permitted, the adjusted rates, in the Consultants' opinion, are not adequate to support the equipment and do not reflect 1987 equipment owning and operating costs. In fact, since most equipment has been provided under grant, the rates have no provision for owning or investment costs thus increasing the rental revenue deficiency.

The policy of the PID/DOH not to include capital or interest costs in their rental rates hides the true cost of a machine and is one factor preventing the establishment of a self sustaining equipment programme.

In most cases this equipment has also been exempted duties and taxes.

Compounding the problem the unit prices paid to contractors by the PID/DOHs were last published in a composite schedule 01.07.79 and, like the rental rates, although a premium adjustment is permitted for each subsequent year the adjusted rates do not compensate the contractor for the economic realities of 1987. The combination of unrealistically low rental rates and unit prices have misled the departments to the true and reasonable cost of performing work.

Table 7.1 compares some rental rates, adjusted to 1987, for several pieces of equipment compared with a calculation prepared by the Consultant that more accurately represents current costs.

The Consultants recommend both rental rates and unit price rates be brought up to date and revised annually.

7.3 Project Implementation

7.3.1 PID/DOH

The PIDs are in agreement that roads built along the canal banks would be beneficial to the public. They are willing to make their right of way available for canal bank public roads provided the roads are constructed to DOH standards and the travelled surface is finished to a 12' metalled width. They also insist that they will be

responsible for the construction and O and M of the roads.

Because a large percentage of the construction cost will be in the extension or rebuilding of PID designed structures their desire to retain control is understandable

TABLE 7.1

COMPARISON OF EQUIPMENT DAILY RENTAL RATES

EQUIPMENT	PUNJAB DOH PUBLISHED RATE		CONSULTANT	
	RENTAL RATE 1.5.82	ADJUSTED AT 5%/YR NON.CUM. (x.1.25)	CALCULATED RATE 1.87 USING CURRENT PRICES	o/o DEFICIENT
VIB.ROAD ROLLER 6 T	181.00	226.25	1376	508
BULLDOZER 65-70 H.P.	515.90	644.87	688	7
TRUCK 10 T.	309.00	386.25	2096	443
TRACTOR 45-65 H.P.	261.50	326.88	1648	404
VIB ROAD ROLLER (S.P.)	906.00	1132.50	2656	134

Source: PUNJAB COMPOSITE SCHEDULE OF RENTAL RATES 1.5.82
CONSULTANTS' ESTIMATE (App. 7.10)

however the Consultants do not believe that the PIDs have sufficient technical ability to undertake a road construction project. Neither do they have sufficient personnel or equipment that can be committed full time to the CRP for five years.

The DOHs on the other hand have both the technical ability and experience to build the roads but, like the PIDs, they do not have personnel or equipment that can be exclusively committed to the CRP for a five year period.

7.3.2 Contractors

The contractors in Pakistan can be divided into three categories, the large privately owned contractor with technical and managerial capability and its own fleet of equipment, the "average" contractor with limited technical and management skills and little equipment, and the "small" contractor, usually one person, with basic skills willing to undertake work with rented equipment.

The PIDs/DOHs contract construction work to the latter two using force account rates as unit prices. The contractor generally rents any necessary equipment from a public rental pool. Because the rental pool equipment has usually been acquired under a financial assistance programme the rental rates do not include investment or capital costs thus the resulting rental rates are

unrealistically low. Since this equipment is rented at artificially low rates to contractors with relatively low skills and virtually no overheads the total costs, rent plus operating costs, to perform the work are lower than they should be and are reflected in the low unit prices paid by the PIDs/DOHs.

The large private contractors on the other hand must pay the capital cost, financing cost, duties, taxes and freight to acquire construction equipment and these costs plus an element of profit (say 10%), must be recovered over the life of the machine. When these owning costs are added to the operating costs the necessary rental rate is, in most cases, over double that paid by the small operator for rent and operating costs. The large contractor also has a sizeable investment in support facilities - technical and administrative - overheads which may add up to 15% of its costs. These may also be legitimately recovered through its rental rate.

Table 7.2, an exerpt from App.7.9A the calculation of hourly O and O costs, illustrates the point. The column headed "Operating Cost" is representative of the combined cost of rental and operating costs that a renting contractor may pay to work a machine. Of the 391 Rs. per hour operating cost of a bulldozer approximately 160 Rs. would be paid as rent although in reality it

should be reserve for repairs that the rental agency must make at some future date. The balance 231 Rs. is the estimated actual operating cost to the user. The contractor who owns a bulldozer has the same operating and reserve costs as the small operator but must add ownership costs (489 Rs.), overheads (132 Rs.), and profit (101 Rs.) for a total of 1113 Rs. To compare the two rates 10% profit has been added to the operating cost to yield 430 Rs./hour for the small operator vs. 1113 Rs./hour for the large owner/contractor. Difference - 258%.

The large difference in rates explains why the Provincial departments use the smaller contractors for the majority of their work. Their budget will simply not permit them to hire contractors at the higher unit prices. Some of the "saving" will be eroded by the need for more supervision during construction and /or more extensive O&M because the quality of construction of the less experienced contractor may not be as high. Because the PIDs/DOHs cannot afford the higher rates the larger contractors are almost exclusively employed by the National Highways Board (NHB).

Several of the approximately 8 or 9 large contractors in Pakistan supplied the Consultants with their equipment inventory reports which are summarized in App.7.15. Most of these contractors experienced their growth in the mid 1960s and early 1970s and 1980s from a

common beginning with loader and truck haulage and extensive tractor/trolley work. Nearly all have several large static smooth wheel rollers and a few have vibratory smooth wheel rollers. Only recently have some acquired tractors over 250 HP or scrapers and larger trucks and loaders.

TABLE 7.2

COMPARISON OF TOTAL RENTAL RATES - Rs / Hour

PID/DOH vs PRIVATE CONTRACTOR

Description	Reference	Owning Cost	(1) * Operating Cost	Sub Total	15% Overhead	Sub Total	10% Profit	(2) Total	* Percent Difference to (2)/(1)
Bulldozer 165HP	7.9A	489	391	880	132	1012	101	1113	228
Tractor 62HP	7.9A	191	148	339	51	390	39	429	290
Compactor-smooth	7.9A	190	169	359	54	413	41	454	269
Dump Truck 10T	7.9A	233	310	543	81	624	62	686	221

(1) Equates to PID/DOH rental rates plus operating costs (less Operator).

(2) Equates to private contractors rental rate (less operator).

* To calculate difference 10% profit has been added to operating cost for small contractor.

e.g.Bulldozer Operating Cost = 391 + 10% profit = 430 Rs./hr.

$$\text{Difference} = \frac{1113 - 430}{430} \times 100\% = 258\%$$

Source : Consultants Estimate

Saadullah Khan and Brothers, for example, secured 86 miles of NHB work between 1981-1985 and, with a 70 MRs mobilization fee, was able to buy a substantial fleet of new equipment. (Unless guaranteed large contracts the only way most contractors can buy equipment is with the help of a mobilization fee.) Most of the equipment was related to asphalt paving and aggregate production and not to earthmoving.

Khan is one of the largest contractors in Punjab with technical, management, and equipment support facilities. Despite this extensive back-up, and although using new equipment, the contracts took six years to complete, instead of the original four suggesting an average completion rate of only 14.3 miles per year. If Khan is one of the largest the production for the average large contractor is probably 12 miles per year. Accepting this is indicative of the capabilities of the (9) large contractors this means approximately 108 miles of road could be completed each year if these contractors committed 100% of their equipment full time to NHB type work. The NHB plans to call 375 miles of road in 1987 and approximately 200 miles in 1988. Allowing for a 5% decline in productivity each year as the contractor's equipment gets older the large contractors could be employed full time on NHB contracts alone for the next 6 years.

In the Consultants original estimate of equipment requirements it was assumed that 45% of the CRP would be built using traditional methods and 11% (20% of the balance) by equipped capable private contractors. If the CRP contracts were only moderately attractive to the private contractor 11% of their capacity might be allocated to CRP contracts as a gesture on their part to help, in a benevolent fashion at discounted unit prices, the development of Pakistan's rural road system. At the same time this would extend their NHB employment to about 7 years.

The 30.04.87 edition of "Dawn" quotes the Punjab Minister for C and W, Mr. Saeed Manais, stating that in addition to 333 miles of rural roads currently under construction with ADB assistance and 1400 miles by Punjab Province a further 4000 miles of farm to market roads will be built in Punjab over the next three years. Some of this will be an overlap of the 1000 miles of annual Punjab construction but still represents a 30% increase in new road construction.

With so many construction opportunities the equipment capacity in Pakistan will be quickly used up. The large contractors will gravitate to the large (NHB) projects that can afford to pay better unit prices and the small contractors will be left to build the other roads.

To encourage the existing contractors to commit a

greater share of their assets to the CRP the tenders must be made more attractive to them. Some of the larger tenders would have to be restricted to prequalified contractors capable of supplying management, technical competence, and a substantial amount of equipment and support facilities. Permitting smaller less experienced contractors to bid on the same work would represent unfair competition since their unit prices would not reflect the overheads or expertise of a fully integrated construction company.

To attract the larger contractors the CRP must be prepared to :

1. Open some part of the bidding to prequalified contractors only.
2. Increase the size of some contracts to a minimum of, say, 20 miles to maximize contractor efficiency.
3. Be prepared to accept unit prices that are double, or more, current published unit prices.
4. Be willing to assist qualified contractors financially to acquire additional equipment or to purchase parts to refurbish equipment specifically allocated by them to the CRP.

If more of the larger contractors were involved in the CRP the foreign exvhange budget would be reduced, the existing private sector would be strengthened, and there would be more likelihood of the project being completed

on schedule. The trade-offs will be a higher local currency cost because of higher unit prices, less (new) expansion in the private sector, reduced emphasis on O and M because the contractors will take their equipment with them when they leave and the PIDs have no road maintenance equipment at the present time.

Tables 7.3 and 7.4 show the Consultant's estimate of the effect of increasing large contractor involvement from 11% to 35%.

For operation of the equipment in addition to the PID supplied machines, another and perhaps more attractive possibility would be to hire people indigenous to the CRP systems as operators, training them in both construction principles, equipment application and maintenance techniques. From the AID standpoint the investment cost would be only slightly higher than supplying equipment and support to the PID/DOHs requiring more emphasis on low level supervision and training. The potential benefits attainable from this new element of the private sector exceed those from any of the other contractual possiblities.

1. Local labour would be trained in new skills adding another dimension to rural industry.
2. New contracting firms may be formed locally as a result of experience and training gained on the CRP.

TABLE 7.3

CRP - FE BUDGET

Revised for 35% Contractor Involvement

Description	Reference	Reduced Budget US$ 1000	Reduced Budget MRs	Consultant Recommended US$1000 Table 8.2	Consultant Recommended MRs.	Saving with Reduced Budget US$ 1000	Saving with Reduced Budget MRs.
EQUIPMENT							
Construction	App.8.10A	11286	193	17432	298	- 6146	-105
Vehicles	"	723	12	723	12		
Bitumen	"	2475	43	2475	43		
Spare Parts	App.8.11A	3200	55	4350	74	- 1150	- 19
Tech. Assist.	Text 8.3	900	15	900	15		
Sub Total		18584	318	25880	442	- 7296	-124
PROVISIONAL							
Spare Parts	App.8.13	2317	40			+ 2317	+ 40
Tech.Assist.	App.8.13	180	3			+ 180	+ 3
Sub Total		2497	43			+ 2497	+ 43
Total		21081	361	25880	442	- 4799	- 81

Source : as noted
Consultant's Estimate.

Table 7.4

COMPARISON OF CRP COST ESTIMATES - MRs

CONSULTANTS RECOMMENDATION
VS
INCREASED CONTRACTOR INVOLVEMENT.

REFERS TO MAIN REPORT ONLY

DESCRIPTION	Ref.	CONSULTANTS RECOMMENDATION	Ref.	MORE PRIVATE CONTRACTING
Work by Traditional Methods.		45%		45%
Work by Private (large) Contractor.		11%		35%
Work sub contracted by PID		44%		20%
1. Civil works, incl. integral structures	Text 8.5	1817	*	2253
2. Other Structures, outside road	Text 8.5	35	*	43
3. Buffalo Ghats.	Text 8.5	9	*	11
4. Equipment	A 8.10	341	A 8.10A	236
5. Vehicles	A 8.10	12	A 8.10A	12
6. Spare Parts	A 8.11	74	A 8.11A	95
7. Technical Assistance	Text 8.3	15	A 8.13	18
8. Consulting Engineering Fee	Text 7.5.2	112	**	127
Sub Total		2415		2795
9. Escalation, items 1-3		included		included
10. Escalation, items 4-6, 8%		34		28
Project Total Estimated Cost.		2449 MRs.		2823 MRs.
	Difference			+ 374 MRs.
				+ 15%

* Estimated cost from Cons. Rec. has been doubled for 35%-11%= 24% of work.
** Allowance has been reduced from 6% to 5.5% of items 1-3.

Source: as noted
Consultant's Estimate.

BEST AVAILABLE DOCUMENT

3. The equipment recommended for the project includes the type of equipment required for O and M of the canal roads and is expected to remain within the system for future CRP O and M. The best operators, of course, would be those that were employed on the CRP who should be more efficient and capable of maintaining the road to DOH construction standards.
4. The O and M contracts could extend and increase employment in the area.
5. The Consultants believe it is possible to develop an incentive programme via a CIP window for equipment operators on the CRP to own the rented equipment at the end of the project. While the concept of assisting individuals with limited assets may be unique to AID programmes a rental purchase arrangement could be structured whereby part of the operator's remuneration would pay for a part or all of the equipment he rents or operates over the life of the CRP. At the end he would have increased his asset base considerably and have a visible means of earning income, perhaps though contracting for canal roads O and M work.

The Consultants believe suporting, training and contracting with the local people will do more for rural development and the success of the CRP than the other possibilities.

In making their recommendations the Consultants considered the sources of construction capability in the three Provinces bearing in mind the competing contracting opportunities available to contractors.

The self sufficient private contractors, those with substantial inventories of owned equipment, it was thought, could perform 11% of the CRP work. Increasing their participation to 35% has been discussed above and, although unlikely in the Consultant's opinion, this increase might occur if the contracts are made attractive enough.

The estimate of the work to be performed using traditional methods, basically non-mechanised, remains at 45%. The remaining work would be subcontracted by the PIDs to the "average" contractor in the private sector who would in turn rent equipment from a public rental pool or from the PIDs. The volume of work performed by them therefore will be between 44% and 20% depending on other contractor participation.

7.4 Equipment

7.4.1 Equipment Selection

The equipment required for the CRP falls into several distinct categories :

Mechanised Earthmoving

Labour Intensive Earthmoving

Structures

Bituminous Supply

Aggregate Supply

Operation and Maintenance (Road O&M)

The Consultants split the estimated quantities of earthwork to be moved into a volume that could be reasonably handled by traditional and mechanised methods. The split, 45/55, was based on the observations of the Consultants' engineers as they inspected the proposed road sites.

Regardless of which sector completes the work embankment and base course must meet compaction specifications. It is mandatory, therefore, that the CRP be equipped with new self propelled vibratory padfoot compactors. The weight should not be less than 12 Tons and the dynamic force at least 40000 lbs. at 1800 vpm. This type of compactor can be used in the wide range of local soil types, is adaptable to various lift thicknesses, and is highly manoeuverable. None of sufficient weight or capacity or design are available in Pakistan. Sheepsfoot packers are not as effective as the padfoot design. Compaction equipment has been budgeted for all earthwork.

The labour intensive methods are assumed to include tractors with backhoes, blades or front end bucket

attachments, trolleys and manual and donkey labour. Since these inputs are readily available for rent in each canal system area there is no budget allowance for additional equipment for this activity.

The structures on the CRP, culverts, outlets, bridges etc. are labour and material intensive. Some light excavation/bulldozing and crane equipment will be required as well as transport and cement mixers however since these structures may be scheduled independent of the embankment construction PID owned equipment may be used when it is available in conjunction with local rentals. No further equipment is considered necessary for this activity.

There is a considerable shortage of bituminous equipment for Triple Surface Treatment (TST) in all Provinces. Complete bituminous plants have been budgeted, with the exception of smooth wheel rollers. There are over 500 serviceable DOH road rollers in Pakistan (App.7.6-8) and some of these may be rented to supply the modest needs of the CRP.

Aggregates for the surface, base, and subbase courses will be purchased, placed, and compacted by contract as is the present custom.

Equipment for the operation and maintenance of the road is largely labour intensive and will require little support in the way of new equipment (App.8.10). Most of

the additional equipment will be for maintenance of the bituminous surface and is included with the original plant which is expected to remain in the system area after the project is completed.

There are several issues to be addressed if the PIDs are to undertake this project and especially if they are to receive additional equipment.

1. Unlike the DOHs the PIDs have not been in the habit of renting their equipment to private contractors. Unless the PIDs are prepared to supply operators, i. e. undertake a large portion of the work themselves, this policy must change to allow small contractors, who may be more experienced in road work than the PIDs, to participate in the CRP.

The PIDs were asked what their policy would be regarding rental of PID owned equipment to contractors for the CRP. The replies were :

C.E. Irrigation, Punjab - with the exception of specialize equipment (draglines) they would follow the DOH lead and rent road building machinery to contractors.

Secretary, PID, Sind - prepared to rent non specialized equipment, (letter on file).

Secretary, NWFP - will rent equipment to contractors.

2. The PID mechanical circles are more centralized than the DOHs and, without expansion, will not be able to efficiently support construction equipment remote from their existing service centres. Consideration should be given to contracting with the DOHs for service rather than duplicate facilities.

3. The bitumen equipment that has been recommended require relatively low technical knowledge to operate but it does require experience to use it effectively and economically; experience that the PIDs do not have.

Compared to the volume of highway work being undertaken by the DOHs the annual requirement of the CRP is insignificant and the equipment, if used solely for the CRP, will be underutilized. The Consultants believe that the TST plants should come under the jurisdiction of and be operated by the DOHs who have the experience to use them and have the volume of work to assure maximum utility. While this arrangement may present some co-ordination difficulties some plan could be worked out in advance between the consultant and the DOH to assure the CRP access to the plants when

needed. The DOH would perform the work for the CRP.

It is more economical if the TST plants can surface continuous sections of road of, say, a minimum of 5 miles. This may represent 5 months work to a contractor, too long a period to have the road base open to the weather and traffic. As an interim step to protect the base a pre-seal coat of an E.R.C. cutback or similar asphalt will preserve the base until the TST can be applied in long stretches. The additional cost, including a manually applied sand cover, would be approximately 95000 Rs./mi. which will be less than the cost of repairing the base course after a 5 month wait and less than the increased cost of doing the TST in several smaller sections.

7.4.2 Equipment Requirements

The Consultants calculated the number of cubic feet of material to be handled in each selected canal reach (App.8.4). An arbitrary split 45/55 between labour intensive and mechanised work was made by the Consultants. An additional amount of 20% was deducted from the mechanised portion to reflect work that the Consultants believe can be done by local contractors (App.8.4). An earthmoving fleet of mechanised construction equipment similar to those currently used by the PIDs was then selected (App.7.11) and its

production capabilities estimated. From this, knowing the system mileages, and using a project time frame of five years the number of fleets required was calculated (App. 8.5) and then the number of pieces of equipment needed for each Province was determined (App.8.6-8).

O and M equipment requirements have been estimated in App. 8.9.

The number of pieces for each type of equipment required for the CRP is summarized in App.8.10 where the equipment available from the PID is deducted to give the net requirement.

Estimated hourly owning and operating costs have been calculated in App.7.9 A.

7.4.3 Maintenance

Delivery, set-up, initial service and warranty administration will be performed by the manufacturers' local representative.

The daily and preventive maintenance will be performed by departmental field crews. To facilitate field maintenance and repair each fleet of equipment is supported by a parts and service trailer arranged to provide a protected work area (App.7.15,16). The service trailers have a small desk area to permit the mechanics to work on records and store service manuals. Storage is supplied for tools and small components under repair. A

5 KW electric set and small compressor supply power and air. There semi enclosed service areas will offer a measure of protection from the weather and provide relatively clean conditions to work in.

It is expected that major repair work will be performed at the central service shops of either the PID or DOH.

Although considerable tooling was supplied under ISMP-I to upgrade the PID general machine and work shops much of it has not been installed and there is still insufficient service tooling and testing equipment to adequately support the new technology equipment. Eventually the service shops, as against general workshops and machine shops, must be upgraded to include efficient servicing capabilities but until a comprehensive assessment of the GOP needs is completed the Consultants recommend increasing the protective parts coverage, especially with components.

As much as possible the PID/DOH should rely on equipment distributors to rebuild and warranty components. Most equipment dealers offer exchange components at very favourable rates, eg. App. 8.12.

Appendices 7.1-8 summarize the equipment in PID/DOH inventory as of March 1987. The Consultant has indicated the probable condition at various ages of the equipment. Obviously not all equipment should be scrapped after 10

years, shovels and static rollers, for example, may have a much longer life. As all equipment gets older the cost to maintain and rebuild it must be carefully weighed against a reasonable estimate of its future life and cost per hour. The periods indicated are those where major rebuild expenditures may occur and the point at which a decision to scrap or rebuild must be made.

7.4.4. Parts

The equipment must be supported by a parts inventory that will cover the daily and preventive maintenance requirements and, in addition, provide protection against unscheduled breakdowns.

Historically an allotment of 15% of the equipment value was thought to be adequate but this percentage has changed with the advent of new technology machines. Manufacturers have designed equipment using component modules that can be changed quickly in the field minimizing machine downtime and reducing the risk of internal contamination of the machine with dirt. The manufacturer has effectively increased both machine life expectancy and productivity thereby reducing hourly owning and operating costs.

Many of the components however require rebuild techniques and testing procedures that are beyond the capabilities of most equipment owners. Component rebuilds should not be attempted under field conditions but should be returned

to the central workshop or distributor for rebuilding under sanitary conditions. To maintain equipment availability, especially in remote areas, the prudent owner should stock a reasonable number of components for use at the prescribed intervals of preventive and scheduled maintenance. The used units should be returned to the dealer for rebuild. Most equipment dealers offer equitable and economical exchange programmes. (App.8.12)

Because components are more costly than individual parts the protective parts stock, percentage wise, has risen to between 21% and 26% of the value of the equipment depending on the level of protection deemed appropriate. The higher amount will ensure that the equipment is in good operating condition at the end of the project providing the manufacturer's maintenance recommendations have been adhered to.

7.5 Technical Assistance

7.5.1 Training

The TOR indicated that the need for specific training, other than quality control, need not be addrssed.

While there is no budget allowance for technical assistance in this area the Consultant has noted that some of the equipment supplied in ISMP-I continues to breakdown through misapplication and overstressing. Some education on machine limitations and operation is

still required.

7.5.2 Independent Consultant

The PIDs have stated that they wish to construct the canal roads using their own resources. The experience and results of ISMP-I indicate that they do not have sufficient design and supervisory staff to under take the additional work involved in the CRP. The PIDs are able to perform and manage relatively small contracts but the CRP, especially if it is concurrent with ISMP-II, is a much more complex project that will require a high degree of co-ordination and quality control. The PIDs have experience in canal maintenance and structure design and rehabilitation but have no experience in building embankments and roads to the DOH standards required for the CRP.

From the outset of ISMP-I the PIDs demonstrated a lack of design capacity and technical capacity. Many of the rehabilitation schemes presented to USAID/IDA for approval were rejected or required extensive modification. Eventually the consulting engineer, who was originally retained in a supervisory / control capacity, was forced to take a more active role in the detailed design and administration of the project. The PIDs also lacked sufficient qualified inspectors to control the quality of the works mostly because the project was broken down into a myriad of small contracts

that made constant supervision with the existing staff impossible.

ISMP-II is a similar project to ISMP-I and, if enlarged with the addition of the CRP, will become a much larger and more technically demanding project. The Consultants believe that the strengths of the PIDs have not increased significantly over the term of ISMP-I and cannot be considered to include the experience of first class road building.

The Consultants therefore recommend that an independent local consultant be engaged well in advance of the start of construction. The consultant's TOR should clearly define the extent of its participation but should include :

- detail road design or design supervision
- project implementation and co-ordination (CRP)
- project monitoring to co-ordinate on site engineering and quantity surveys
- equipment deployment and scheduling
- quality control, especially compaction and civil works
- budget control
- processing reimbursement applications
- progress reports as required by the funding agency and PIDs
- preparation of as built drawings and documentation

- participate in preparing the final evaluation report

Reputable Pakistani engineering firms have indicated that their fees range from 4-6% of a project's cost depending on the complexity of the job and the extent of their involvement. The CRP project is not technically difficult but the involvement of the consultant will be extensive. The allowance in the budget is 6 % of the total project costs excluding the foreign exchange components of equipment, spare parts and technical assistance.

8. SCHEDULE AND FOREIGN EXCHANGE BUDGET

8.1 Construction Schedule

The CRP budget has been developed independent of support from the ISRP - Phase II. Although construction of the canal roads may be concurrent with the Phase II rehabilitation the Consultants believe the level of co-ordination of the various activities and the technical ability required to undertake both projects simultaneously is beyond the current capacity of the PIDs.

The PIDs and some contractors have become familiar with the work associated with canal rehabilitation and can undertake that work in a reasonably competent manner. Road construction however uses different equipment, techniques, and requires a higher level of organization to schedule many more activities and achieve an acceptable level of efficiency. It is quite possible that contractors engaged for canal rehabilitation may not be suitable for road building but road building contractors would undoubtedly be able to do both.

If the roads are to be built at the same time as the adjacent canal is rebuilt the road should not be metalled until all heavy equipment is removed from the site. Vehicles that exceed the road design criteria or machines with grousers or lugs could cause extensive damage to the metalled surface and shoulders. If no

heavy equipment is to be used for the canal work the CRP roads could be built at the same time as or prior to ISR P-II.

Obviously if the canal rehabilitation precedes the road construction the patrol road need not be rebuilt as part of the canal works. It would logically form part of the CRP.

The construction of the CRP roads involves reconstruction and extension of a great number of PID structures that would not necessarily be done as part of ISRP-II. It may be preferable, therefore, to build the structures and the CRP roads (the patrol roads) under a separate contract.

There are a number of pre-project activities that must take place prior to the start up of actual construction. Most of these will be under the direction and supervision of the independent consultant in co-operation with the implementing agency. An allowance to cover these activities and the consulting engineers fee has been included as a lump sum equal to 6% of the CRP overall cost excluding FE.

The FE budget costs have been calculated independently of the engineering estimate and deal only with foreign exchange costs, all local currency costs being accounted for in the embankment, surfacing, and civil works

estimate. The "hard" budget is made up of finite elements derived from equipment supply sources whereas the engineering estimate is calculated using unit prices based on actual and current field experience.

8.2 Equipment

8.2.1 Capital Cost

Foreign Exchange (App.8.10)

US $ 20 630 000

353.186 MRs

The equipment estimate has been based on manufacturers' and distributors list prices in US dollars. As a rule on large multiple orders discounts of at least 10% are common and, for budget purposes, this is believed sufficient to cover all shipping and freight related costs including marine insurance.

The Consultants recommend that all equipment should be purchased through and delivered and supported by the manufacturer's Pakistani distributor. Equipment should not be purchased from an agency unable or unwilling to support it in the field. Purchase agreements should contain a distributor performance clause and request an outline of specific services the distributor is prepared to offer and at what cost, if any.

It is further recommended that equipment and parts designated for the CRP be admitted tax and duty free and, that on condition that GOP develops a self

sustaining equipment management programme over the next five years that the equipment and parts will be supplied under a commodity grant.

8.2.2 Spare Parts - (App. 8.11) Foreign Exchange US$ 4 350 000

74.385 MRs

Parts usage has been calculated based on the Consultant's experience with equipment operating under similar conditions. The basic parts inventory assumes that the maintenance schedules and procedures recommended by the manufacturer will be carried out at the specified intervals.

The calculation has been made in two parts. The first provides sufficient parts to maintain and protect the equipment to the point of overhaul - somewhere between 6 and 7000 hours. It includes an allowance for parts and exchange components that would be used if the overhaul was actually done. The second calculation provides daily maintenance and preventive maintenance parts only to the end of the five years. This latter represents the basic parts stock for the CRP. For emergency protection an additional parts stock amounting to 50% of the difference between the two calculations has been added to the basic inventory.

Normally the additional stock would be 35% of the difference but the long distances between Provinces and construction sites justify some duplication of inventory

thereby minimizing the risk of entire fleets being shutdown for want of a part for a prime machine, e.g. the front end loader in a loader/truck operation, or the compactor in any operation.

8.3 Technical Assistance Foreign Exchange US$ 900,000

15.390 MRs

For the purposes of the FE budget, and in line with the TOR, an allowance has been made for one long term expatriate project supervisor. Tenure 5 years.

Annual -	Basic Salary	US $ 70,000
	Overheads including post allowance	70,000
	Moving 10,000/ 5yr.	2,000
	In and out airfare/year 2 @ 1500/5 yr.	600
	R and R. airfare/year 2 @ 1500	3,000
	Housing allowance (annual)	25,000
	Total	170,600
Project Total	170600 x 5	$ 853,000
	(say)	$ 900,000

8.4 Summary Foreign Exchange Budget

TABLE 8.1

SUMMARY FOREIGN EXCHANGE BUDGET

ITEM	NO.OF UNITS	F.E. US $1000	LOCAL CURRENCY M RS.
Equipment (App.8.10)			
Construction	190*	17 432	298 436
Bituminous	63	2 475	42 372
Vehicles	38	723	12 378
	291	20 630	353 186
Spare Parts (App.8.11)	qty.	4 350	74 472
Technical Assistance-long term (8.3)	1	900	15 408
TOTAL		25 880	443 066

* Major pieces of equipment only

Source : as noted
Consultants Estimate

8.5 Summary of Cost Estimates - CRP

TABLE 8.2

SUMMARY OF COST ESTIMATES

CANAL ROADS PROJECT

	Ref.	F.E. US$1000	Local Currency MRs
1. Civil Works including structures integral with the roads		--	1817
2. Other Structures, canal vehicular crossings, pedestrian crossings		--	35
3. Buffalo Ghats, permanent and semi permanent		--	9
4. Equipment (253 major pieces)	(App.8.10)	19907	341
5. Vehicles (38)	(App.8.10)	723	12
6. Spare Parts	(App.8.11)	4350	74
7. Technical Assistance (1)	(Text.8.3)	900	15
8. Consulting Engineering Fee - items 1-3, 6%			112
Sub total		25880	2415
9. Escalation, items 1-3			included
10. Inflation, items 4-6, 8%		1998	34
PROJECT TOTAL	US$ 1000	27878	2449 MRs

9. PROJECT EVALUATION

9.1. Introduction

Project evaluation aims to determine whether the project objectives will be met, whether the expected outputs, effects and impact will be achieved, and whether the project is feasible. Feasibility requires that the benefits generated by the project exceed the cost of goods and services used in construction and operation. These gains must match or exceed the returns obtainable from alternative use of the same funds. The primary objective of undertaking economic analysis is thus to determine whether the contributions of this project, in the shape of added value and benefits, are adequate to justify the use of scarce resources needed for its construction (investment or capital costs) and operation (recurring costs). This process involves the assessment of the project benefits, both primary and secondary, and the costs to be incurred during the project life.

To assess the capacity of the project to repay its costs, financial analysis is undertaken. In contrast to economic analysis, financial analysis does not adjust price of inputs and benefits to correct for market imperfections or to reflect international prices. Its purpose is to identify the effects of the project investment on the public finance. Both economic and financial analyses are necessary to assess the real

worth of the project, as well as its status in the competing investment schedule.

The methodology used in the analysis for determining the situation "without" and "with" project, and the net benefits attributable to this project, is described in the following section. More detail about assumptions, the rational for choices, the background and procedure for estimates, and detailed tables recording step-by-step calculations, are presented in Appendix 9.

9.2. Methodology

To assess the economic feasibility and financial viability of the project, benefits were determined by the general procedure described in this section.

The project of constructing canal roads is designated by USAID to be a five year project, during which time it is intended that all construction will be completed. At the completion of construction, the stream of benefits may be still growing, so a longer period of time such as the expected life of the roads constructed is necessary for analysis. In this case, a period of thirty years is used.

The location and extent of the irrigation systems were established from maps. Agricultural, census and highway data are not gathered or recorded for irrigation systems, so a political subdivision (district) was

identified which was representative of conditions in each irrigation system, and which served as a source of data. Usually, the district made up a large part of the system. After the engineers established where the proposed roads would be located, boundaries of the systems and of the areas impacted by the roads network were sketched on maps, and systems and impacted area determined by planimeter measurement. Characteristics of the impacted area such as population, extent of the road network, area of crops etc. were estimated by prorating district characteristics on the basis of area. Use of this procedure assumes that such attributes (population, for example) are uniformly distributed throughout both the district and the system. Since that assumption is demonstrably false in some places, it was necessary to adjust some of the prorated figures on the basis of on-site visits and the Consultants' personal familiarity with the area.

Population growth rates as determined for the districts by recent censuses were assumed to apply to the systems. For estimation of population in future periods, these annual growth rates, which ranged from 4.7 to 1.32 and averaged 3.0 percent, were brought into the range of 3.5 to 2.5 percent, again averaging 3.0. The adjusted population growth rates were assumed to remain in effect for the life of the project.

Four crops - wheat, rice, cotton, and sugarcane - referred to in this study as the major crops, make up the bulk of agricultural production and its value in most of Pakistani agriculture. Other crops are important locally, but these major crops constitute a common denominator in the provinces of Punjab and Sind. In NWFP, maize replaces cotton, while rice is important in only one system. These major crops are used to represent all agricultural production.

Study of the area and yields of major crops as shown in district data, combined with field observations in the impacted areas of the irrigation systems, revealed certain patterns of change over time and bases for expectation of other changes. Areas and yields were estimated for a period 20 years in the future assuming that normal growth in the interim period would accomodate these patterns. For example, high yields of a crop and a trend towards increase in the area of that crop suggest that future yields might increase more slowly but that the competitive advantage of that crop would lead to expansion of the area devoted to it. Existing or expected trends in land deterioration and reclamation, farmers' acceptance of new technology and their responsiveness to expected market conditions, known or expected potential of various crops for higher yields, and research and extension programs were considered in an attempt to develop a realistic picture

of agricultural changes over the next two decades. Changes were not projected beyond 20 years; it was assumed that area and yield of crops would remain constant after that time.

The canal roads project is expected to make a difference in the rate of growth in the impacted areas. Improved access to the fields for conveyance of new technology, machinery, and purchased inputs, and easier egress from the fields, with reduction in difficulty and cost of hauling, will improve profitability of agriculture leading to increased use of purchased inputs and further increases in productivity. The rate or amount of such increase was estimated for each of the irrigation systems. The impact of the roads construction was assumed to be felt in increases in production of major crops, which would begin to take effect the year after construction of a given road was completed, and would increase progressively over a number of years, following a pattern of increase paralleling the accomplishment of road construction work, which the engineers have estimated as 15, 20, 25, 25, and 15 percent respectively in the five years of the project. Agricultural production over the life of the project is calculated including the effect of the roads project, and the value of the increase over the without-project situation quantifies the first benefit of the project.

The construction of additional roads in the system may not change the distance to market, but it will reduce the distance that produce must be hauled over unpaved roads or tracks to reach the market. The average distance from field to paved road, without and with the project, was calculated. A study of hauling costs paid by farmers established that transport over paved roads compared to unpaved roads saved Rs. 3.80 to Rs. 5.90 per tonne-kilometer. The savings in hauling cost was calculated for that share of produce that is hauled (subtracting home consumption; seed, feed, and loss adjustment for cereals, and the portion of sugarcane that is not hauled to the mill, and adding agricultural inputs). This savings constitutes the second benefit.

Operation and maintenance costs of canals will be reduced where roads are built and metalled on the canal banks. The reduction will come about because of the elimination of the patrol road and its costs. The saving from this source constitutes the third benefit.

Use of the new roads for all sorts of traffic is assumed to begin as soon as construction is completed, and to increase over time at rates based on the historical increase in vehicles in Pakistan. Without the new roads this traffic, or some substantial portion of it, would have moved over shingled roads, earthen tracks and katcha roads, and would have had to travel greater distances to arrive at the destination. Extensive

studies have shown the reduction of vehicle operating costs (VOC) on paved versus unpaved roads; these savings resulting from improvement of the roads are applied to the anticipated motorized traffic and the length of the new roads to be built, and this is considered to be the fourth benefit.

The improved road network will greatly facilitate travel of the people residing in the impacted areas. They are likely to travel by road more than before and they are certain to travel more easily and more quickly. Based upon assumptions about the number of travellers and trips taken, the savings in time and the value of that time in terms of opportunity cost, a figure is obtained for each system quantifying the value of time savings: the fifth benefit.

The costs of construction of the roads include investment in equipment; expenses for spare parts, fuel, oil, and other costs of machinery operation; cost of materials such as gravel or crushed stone, blacktop paving material, etc; and labour. Recurrent costs for O&M begin for a given stretch of road after construction has been completed; these cost continue for the life of the project. At the end of the construction work, any equipment purchased may have some salvage value. This value is considered to be a deferred one-time benefit or negative cost; this sixth and last benefit is used in

only part of the analysis.

9.3 Discounting: the Concept and the Rates

To take account of the pattern of occurrence (timing) of the benefits and costs over the assumed economic life, and to transfer them to a common time basis, discounting has been used.

All of the costs and benefits calculated and presented in this analysis begin with current values: the cost price at the time of the transaction. Various time periods are represented. Generally, construction costs occur at the outset, and O&M costs begin later; benefits begin later but increase for several years. Simply adding up these values disregards the time value of money. The construction contractor will not be happy to wait for his payment until the benefits are flowing: money in the future has less value to most of us than money received now. Therefore, to make a reasonable comparison of costs and benefits occuring at different times, it is necessary to express all of these costs and benefits in their equivalent values for a given time period. Traditionally that period is the beginning of the project, and the benefits and costs that occur only after many years are reduced to a greater degree than the construction cost that are not so far away in time.

The amount of reduction or discounting that is appropriate depends not only on the number of years but also

on the discount rate. The cost of borrowed money is expressed as interest - the amount that a borrower pays for the use of the money. For economic analysis (from the view point of the national economy), the rate used should correspond to the rate of interest that would be likely to be paid in funding the project. Pakistani bank loans to individuals or businesses are currently at 12-15 percent. WAPDA uses a rate of 12-13 percent for government funded projects. In recent World Bank documents concerning Pakistan, a discount rate of 12 percent has been used for analysis. The same rate of 12 percent is used as the discount rate in the present study.

9.4 Financial and Economic Prices

For financial analysis, from the viewpoint of an individual or firm involved in a project or undertaking, market prices should be used. These are the costs that the individual would have to pay, and the prices that he would receive for his goods.

For economic analysis, from the point of view of the national government or of an international funding agency, the perspective is different, and financial prices may be inappropriate. What is needed is a measure of the cost or income from a transaction, from a broad societal viewpoint. Thus, transfers within the economy are not viewed as costs or income in economic analysis;

they are the societal equvalent of shifting money from one pocket to another. Taxes and subsidies are examples of such transfer payments. Generally speaking, international or world market prices closely approximate the real cost or value of commodities needed for or produced by a project. International markets eliminate or at least minimize politically-imposed factors such as tariffs embargoes and subsidies. Where economic or "shadow" prices are needed, international prices are used as a simpler way to determine the intrinsic value of the inputs involved in the production process.

Financial and Economic Prices of agricultural commodities are shown in tabular form in Appendix Table 9.1.

The shadow wage rate aims at measuring the opportunity cost of labour. Pakistan has surplus labour in the agricultural sector; some farmers and rural labourers are underemployed or seasonally (or chronically) unemployed. Where a farmer has no opportunity for alternative employment, his opportunity wage rate is zero, and his labour is not considered a cost in economic analysis. However, a zero opportunity cost, although appropriate to some regions and to many individuals, cannot be applied universally. On balance, a shadow wage rate of 75 percent of the market rate has been determined to express the opportunity cost of

unskilled labour in Pakistan.

On the other hand, some portion of skilled labour has an opportunity rate (in international service, particularly in the oil-producing countries of the Middle East) higher than the domestic market rate, so the shadow price for skilled labour is more than 100 percent of the local market rate.

Because the labour component of project costs for this project emphasizes unskilled labour, with only a small proportion of skilled labour, an overall shadow wage rate for all labour equal to 80 percent of local market rates is used for economic analysis of the project.

9.5 Evaluative Measures

A number of different ways exist in which a project may be evaluated. The measures that are used in the present study are Net Present Worth (NPW), Benefit Cost Ratio (B/C), and Internal Rate of Return (IRR). These measures are explained in this section, and calculated and interpreted in subsequent sections. Cost Recovery, a fourth measure, is discussed in another section.

Net Present Worth is simply the present worth of the additional or incremental net benefits. It may also be interpreted as the present worth of the net income stream generated by an investment. It may be computed by finding the difference between the present worth of

the benefit stream and the present worth of the cost stream.

In economic analysis, NPW is the present worth of incremental national income generated by the investment. For economically feasible projects, NPW should be positive when calculated at a rate equal to or greater than the opportunity cost of capital.

A large or small NPW taken by itself may be misleading, as the scale of the project is an important determinant, so that a large project could have an impressive NPW despite mediocre rating by other measures.

Benefit Cost Ratio simply establishes the relationship between the investment and other costs and the expected returns of the project. The annual costs and benefits over the entire life of the project are discounted and added, and then the sum of the benefits is divided by the sum of the costs.

As with NPW, the discount rate should be representative of the opportunity cost of capital. If the project benefits exceed the costs, i.e. if the B/C ratio exceeds unity, the project is shown to be economically viable.

Internal Rate of Return measures the economic feasibility of any project by showing the interest rate or discount rate at which the net present worth of the incremental net benefits (the cash flow) is zero. IRR is

the maximum interest rate that the project could pay on the resources used in its implementation. This measure may be used in both financial and economic analysis, and may need to be identified as financial IRR or economic IRR. In this study IRR is calculated only for economic prices, i.e. Economic IRR.

9.6 Direct Benefits

Implementation of the Canal Roads Project will have a number of important effects on agriculture and on other activities in the affected irrigation systems. Five of the effects are discussed and the benefits quantified in this section.

9.6.1 Increased Agricultural Production

Benefits from increases in agricultural production calculated are based on two main assumptions :

1. Agricultural production will increase in the selected irrigation systems whether there is a canal roads project or not. The production scenario without canal roads is termed Normal Growth. Areas and yields will change somewhat from current figures under this scenario.
2. With the project, agricultural production will be further stimulated by the presence of roads and the availabilty of better transport. The amount of this increase sets yield and production levels at 10 to 35

percent above production with normal growth; intervening years are interpolated but with less than full effect until after road construction is completed.

Production increases are not projected beyond 20 years. Increases in production attributable to the project are determined by subtraction, and value is calculated at economic prices. A summary of production in years 0 and 20 both without and with the project, and the value of the increase resulting from the canal roads, is presented in Table 9.1.

In order to give credit to the effect of improved infrastructure (transporters, merchants, produce buyers, extension workers) that will help to translate the canal roads into improved yields, only 20 percent of this increase is claimed as a benefit of the Canal Roads Project.

9.6.2 Reduction of Off-Road Hauling Costs

Most agricultural production must be hauled to market, to the ginning factory or to the sugar mill, and inputs must be hauled to the field. Some portion of this hauling must be over katcha roads or earthen tracks in most cases. The Canal Roads Project will increase the length of the roads network in each system, which will reduce the average distance of fields from paved roads. The average distance from field to paved road with the

TABLE 9.1

PRODUCTION OF MAJOR CROPS IN YEARS 0 AND 20 WITHOUT AND WITH PROJECT

AND VALUE OF INCREASE DUE TO ACCELERATION OF GROWTH

SYSTEMS	CURRENT PRODUCTION, 000 tonnes				FUTURE PRODUCTION, 000 tonnes								TOTAL ECONOMIC VALUE OF INCREASE Millon Rs.
					Without Project				With Project				
	WHEAT	RICE PADDY	SEED COTTON	SUGAR CANE	WHEAT	RICE PADDY	SEED COTTON	SUGAR CANE	WHEAT	RICE PADDY	SEED COTTON	SUGAR CANE	
PUNJAB													
JHANG	276.54	29.20	46.07	802.06	374.40	27.50	56.10	864.00	505.44	37.12	75.74	1166.40	406.66
GOGERA	359.03	39.40	13.02	2345.80	500.00	37.70	10.00	2184.00	675.00	50.90	13.50	2948.40	494.70
DEPALPUR	407.46	156.68	28.95	1025.75	470.00	211.20	13.00	1053.00	564.00	253.44	15.60	1263.60	334.15
MAILSI	411.02	16.05	325.71	845.50	519.67	9.00	402.80	460.00	571.64	9.90	443.08	506.00	306.85
SIND													
NASIR	23.14	21.56	8.44	534.00	26.98	18.38	8.00	782.00	33.72	22.97	10.00	977.50	63.33
JAMRAO & MITHRAO	53.51	1.68	22.01	68.85	62.50	3.00	24.00	86.00	78.13	3.75	30.00	107.50	63.60
GOTKI	181.97	2.88	64.53	502.15	210.90	2.25	78.40	516.00	253.08	2.70	94.08	619.20	174.99
ROHRI	42.16	3.30	18.97	71.06	57.75	3.60	22.50	76.00	69.30	4.32	27.00	91.20	47.45
DADU	12.11	26.00	0.74	22.56	11.20	38.40	1.15	41.00	13.44	46.08	1.38	49.20	16.73
NWFP													
			MAIZE				MAIZE				MAIZE		
KABUL	36.00	0.00	16.86	472.65	43.70	0.00	20.00	462.00	52.44	0.00	24.00	554.40	37.37
PAHARPUR	13.25	0.00	0.27	10.68	13.95	0.00	1.80	35.00	18.83	0.00	2.43	47.25	11.18
MARWAT	96.48	0.00	28.92	55.44	148.50	0.00	27.00	150.00	193.05	0.00	35.10	195.00	92.67
UPPER SWAT	139.92	154.72	161.35	1104.10	282.20	183.73	258.50	1801.80	338.64	220.48	310.20	2162.16	278.87

Source : Appendix Tables 9.6, 9.7, 9.9 & 9.10.

present roads network, with CRP, and the reduction in distance due to CRP are shown for all 13 systems in Table 9.2. Hauling is easier and cheaper on paved roads than on unpaved roads or tracks, no matter what mode of transport is used. A savings of Rs. 3.8 to 5.9 per tonne/kilometer on metalled roads was established by surveys in the three provinces. This saving applies to the reduction of average distance from the fields and to the tonnage hauled - all of agricultural production less certain exceptions, plus purchased inputs. The savings will be phased in following construction of the new roads. These savings are summarized in Table 9.2.

9.6.3 Canal Rehabilitation and Road Construction

Investigation failed to reveal any economies from combining canal rehabilitation and road construction, despite the logic of such economies. Small economies were found in reduction of canal maintenance where a metalled road will replace the katcha inspection path. These economies result from elimination of the earthen road and its maintenance cost; the larger maintenance costs of the metalled road will be considered a road expense and not charged to canal maintenance. The savings amount to about 32 percent of the normal allocation of O&M funds, but only for the canals alongside which roads will be constructed by the project. Savings by years for the 13 systems are shown

Table 9.2

REDUCTION IN OFF-ROAD HAULING DISTANCE AND COSTS

by Systems

IRRIGATION SYSTEMS	Average distance to Paved Road, Km			Tonnage be Hauled	Savings Per	Total Savings yr 10 Million Rs.
	Current	With CRP	Reduction	yr 10	t/km	
PUNJAB						
JHANG BRANCH	2.64	1.80	0.84	850.62	5.90	4.216
GOGERA BRANCH	2.59	1.93	0.66	1602.38	5.90	6.240
DEPALPUR CANAL	2.64	1.35	1.29	1045.45	5.90	7.957
MAILSI CANAL	1.94	1.27	0.66	646.50	5.90	2.517
SIND						
NASIR BRANCH	2.84	1.93	0.91	709.00	3.80	2.452
JAMRAO & MITHRAO	10.90	2.75	8.16	59.05	3.80	1.831
GOTKI FEEDER	1.88	1.20	0.68	310.51	3.80	0.802
ROHRI CANAL	5.31	2.79	2.52	52.09	3.80	0.499
DADU CANAL	4.78	2.30	2.49	35.58	3.80	0.337
NWFP						
KABUL RIVER CANAL	1.26	1.09	0.18	281.61	4.50	0.228
PAHARPUR CANAL	3.89	2.37	1.52	17.40	4.50	0.119
MARWAT CANAL	3.40	2.98	0.42	129.34	4.50	0.244
UPPER SWAT CANAL	1.75	1.43	0.32	1560.38	4.50	2.247

Source : Appendix Tables 9.11, 9.13, Text 9.6.2 and calculations.

in Table 9.3.

9.6.4 Savings in Vehicle Operating Cost

The number of vehicles on the roads in Pakistan has increased far faster than the length of roads, and the traffic load has increased so much that the Canal Roads Project can be seen intuitively as needed and beneficial. Quantification of the benefits to road users has been done for the new roads under CRP in 13 systems.

Average daily traffic on roads comparable to those that will be built by CRP was determined from published data supplemented by consultants' surveys. Volume of traffic on the new roads is estimated to begin at 200 vehicles per day, and to escalate over time. Studies by the National Highways Board have established the cost of operating vehicles of various sorts on metalled and other roads. The savings in favour of metalled roads is nearly a rupee per kilometer for cars and trucks and well over a rupee for buses.

B nefits of CRP from reduction of VOC were calculated for each system, based on the length of roads to be built, the assumed amount and composition of traffic and its rate of growth, and the VOC from published data. Length of road, average daily traffic and net savings (project benefits) for all systems are shown in Table 9.4.

Table 9.3

CANAL MAINTENANCE SAVINGS WITH ROAD CONSTRUCTION.

(Million Rs)

SYSTEMS	YEARS OF DEVELOPMENT					
	1	2	3	4	5	6-30
PUNJAB						
JHANG BRANCH	0.00	0.030	0.069	0.118	0.167	0.197
GOGERA BRANCH	0.00	0.020	0.046	0.078	0.111	0.130
DEPALPUR CANAL	0.00	0.057	0.132	0.227	0.321	0.378
MAILSI CANAL	0.00	0.019	0.045	0.077	0.110	0.129
SIND						
NASIR BRANCH	0.00	0.015	0.036	0.061	0.087	0.102
JAMRAO & MITHRAO	0.00	0.108	0.252	0.433	0.613	0.721
GOTKI FEEDER	0.00	0.069	0.160	0.274	0.388	0.457
ROHRI CANAL	0.00	0.022	0.052	0.089	0.126	0.148
DADU CANAL	0.00	0.029	0.068	0.117	0.166	0.195
NWFP						
KABUL RIVER CANAL	0.00	0.007	0.017	0.029	0.042	0.049
PAHARPUR CANAL	0.00	0.000	0.000	0.000	0.000	0.000
MARWAT CANAL	0.00	0.004	0.009	0.016	0.023	0.027
UPPER SWAT CANAL	0.00	0.023	0.054	0.093	0.132	0.155

SOURCE : Consultants' Estimates.
See also section 9.6 of Appendix

Table 9.4

NEW ROADS, TRAFFIC AND SAVINGS IN VOC

WITH CRP, by Systems

IRRIGATION SYSTEMS	NEW ROADS IN CRP	Ave. Daily Motorised Traffic		Net Savings in VOC Rs. Millions	
	Km.	Yr. 10	Yr. 20	Yr. 10	Yr. 20
PUNJAB					
JHANG BRANCH	213	333	567	20.569	33.095
GOGERA BRANCH	140	366	692	9.821	16.510
DEPALPUR CANAL	363	355	652	28.728	47.489
MAILSI CANAL	243	358	666	18.524	30.685
SIND					
NASIR BRANCH	57	352	641	4.830	7.208
JAMRAO & MITHRAO	296	326	554	23.558	36.309
GOTKI FEEDER	219	352	645	16.165	26.423
ROHRI CANAL	100	349	632	7.562	12.282
DADU CANAL	104	319	526	8.782	13.518
NWFP					
KABUL RIVER CANAL	31	322	529	2.901	4.582
PAHARPUR CANAL	51	352	637	4.366	7.215
MARWAT CANAL	45	316	512	4.251	6.575
UPPER SWAT CANAL	133	310	494	12.046	18.261

Source : Appendix Tables 9.11, 9.19 and Calculations.

9.6.5 Time Savings

Construction of new roads will lead to establishment of new bus routes. The average traveller will then be closer to a bus stop, and the distance he must walk will be reduced. To calculate the value of this reduction, half the adult male population was estimated to make three trips a month, of which two are at times and by persons such that they have an average opportunity wage rate comparable to local unskilled labour. The time saved by reduction of walking distance to the bus stop (replacing it with the same distance via bus) is valued at an economic wage rate of Rs. 20 per day. The benefits grow over time as population grows, and are phased in following the completion of road construction. The distance and time saved and the maximum annual value of this benefit are shown for each system in Table 9.5. More detailed explanation and more complete presentation of calculations and benefits are to be found in Appendix 9.6.5 and related tables.

Table 9.5

VALUE OF TIME SAVINGS WITH CRP, BY SYSTEM

SYSTEMS	ECONOMIC Trips/Yr 000	REDUCTION of Distance per trip Km	Man days Saved Per Year 000	ECONOMIC VALUE OF TIME SAVED (Million Rupees) Year 10	Year 20
PUNJAB					
JHANG BRANCH	2970	1.68	83.15	2.23	3.00
GOGERA BRANCH	5568	1.32	122.47	3.14	4.01
DEPALPUR CANAL	4103	2.58	176.38	4.79	6.50
MAILSI CANAL	3441	1.33	76.25	2.05	2.75
SIND					
NASIR BRANCH	535	1.82	16.21	0.45	0.63
JAMRAO & MITHRAO	760	16.31	206.58	5.53	8.22
GOTKI FEEDER	1716	1.36	38.90	1.05	1.41
ROHRI CANAL	537	5.03	45.03	1.18	1.53
DADU CANAL	395	4.97	32.74	0.90	1.23
NWFP					
KABUL RIVER CANAL	1273	0.35	7.42	0.18	0.23
PAHARPUR CANAL	266	3.03	13.41	0.37	0.51
MARWAT CANAL	2249	0.84	31.48	0.83	1.09
UPPER SWAT CANAL	6005	0.64	64.04	1.69	2.23

Source : Appendix Tables 9.11, 9.24, 9.25 and Calculations.

9.7 Indirect and Non Quantifiable Benefits

In addition to primary and quantifiable benefits described above, there will be other economic effects on account of road development. These indirect benefits are not readily expressed in monetary terms; however, they are vital factors to be considered in justification of the project. Among benefits of this type are the following :-

i) Employment opportunities will be increased, in construction during the project and in maintenance afterwards.

ii) Employment opportunities will be increased in commerce and industry resulting from increase in farm production, greater disposable income in the hands of farm families, and easier access to the industrial areas.

iii) The standard of living of project beneficiaries will improve not only due to increase in farm income resulting from increased agricultural production and reduced hauling costs but also in intangible ways :

lessened risks, diminished problems of access to fields, reduced work load, greater leisure, and improved contacts with the outside world.

iv) Other planned development in the affected areas will have lower costs because of better transportation facilities available.

v) The project will result in enhanced market value of land, particularly that land very close to the new roads. This benefit will accrue primarily to those landowners who sell their land at higher prices, or who receive higher levels of rental payment. The higher value of land will have adverse effects on the new owners whose investment per unit of productivity is higher and on the renters who pay higher rent. These adverse effects will be mitigated by the higher level of general prosperity that is expected in the impacted areas.

vi) Enhancement of yields and general productivity will be accompanied by development of institutions and formation of capital to cope with and benefit from the additional production. Such development will include agro-based industries which will add to foreign exchange earnings or savings, not only on the raw material (the agricultural produce) but also on the value added in processing.

vii) Effectiveness will be increased for administrative and community service, such as fire and police protection, emergency medical services, and social services. This should have the effect of saving lives of mothers and infants at childbirth, one of the situations where slow, rough or unavailable transport may result in loss of life.

viii) The road network developed or improved with the

implementation of CRP will be helpful to protect the solidarity and integrity of the country by facilitating the free mobility of the defense forces.

ix) Improved access to urban areas will encourge some persons employed in town to commute from rural homes rather than moving to town, slowing the rural exodus and reducing - however slightly - the problems of urban density and associated unrest.

x) Roads are badly needed and should be built in the rural areas. If these roads were to be laid out to connect specified points with the minimum length of road, construction would require taking of farmers land for right of way. Not only would this result in great inconvenience to the affected farmers during construction, but it would permanently and irreversibly end the use as cropland of the strip of land taken as right of way, thus reducing the size of the cropland base from which the food needs of the country are to be produced.

xi) Under the scenario discussed in (x), the cost of acquiring the right of way would be enormous. Cost of right way on the canal banks would be negligible. This benefit is not unquantifiable in principle, but it could not be quantified under the conditions of the study.

9.8 Project Costs

The costs of any project include the expenditures to be incurred in construction, operation, maintenance and replacement (if any) during the life of the project. The project costs of road construction comprise its capital investment costs and the annual operation and maintenance costs.

9.8.1 Investment Costs

The capital costs represent all aspects of the necessary construction, the capital formation including design and engineering services, material, labour, equipment and machinery. The overall capital costs of the canal road project are estimated to be Rs. 1,959 million.

Costs as estimated by engineers are, of course, financial or market costs, subject to whatever over- or underpricing exists as a result of taxes, subsidies, embargoes, or other distortions from a perfect market. These financial costs are adjusted to economic costs by application of shadow prices.

The principal adjustment is in the labour component, which is estimated at 25 percent of capital costs. Using a shadow wage rate of 80 percent, the costs of the labour component are reduced by 20 percent. Certain components of investment costs - - equipment, imported parts, technical assistance - - are already set at

international prices, and others are sufficiently near to economic prices that no adjustment is required.

After adjustment as described, economic costs of the project are Rs.1837.385 million. These cost are distributed over the first five years. The time-wise distribution is not exactly accordingly to the 15, 20, 25, 25, 15 percent achievement schedule targetted by the engineers, because of the necessity to invest in equipment in the first two years and the relatively uniform distribution of the costs of consulting engineers and technical assistance. (The detail of distribution by years and by systems is shown in Table 9.6).

9.8.2 Operations and Maintenance Costs

Costs of operations and maintenance (O&M) are the recurrent expenditures which are to be made in any project to keep it working and in a satisfactory state of upkeep. In the case of CRP, O&M refers principally to maintenance, as roads do not have to be "operated" in the sense applicable to canals, generating plants, farms etc. However, expenditures for the repair, maintenance, replacements (if any), and the labour or personnel associated with them are essential if the roads are to continue to be useful. For this project, O&M costs have been prepared by the engineers on a per mile basis. Their estimates consider all relevant factors under the

TABLE 9.6

ECONOMIC INVESTMENT AND O & M COSTS OF CRP BY SYSTEMS AND BY YEARS

(Rs Millions)

SYSTEMS	TOTAL COSTS				YEARS					MAXIMUM ANNUAL O & M COSTS
	FINANCIAL COSTS			ECONOMIC COSTS	1	2	3	4	5	
	LOCAL	FOREIGN EXCHANGE	TOTAL							
JHANG	147.99	43.250	191.240	179.398	48.052	42.634	33.308	33.039	22.365	2.556
GOGERA	106.43	31.118	137.598	129.077	34.574	30.676	23.965	23.772	16.091	1.680
DEPALPUR	285.37	83.398	368.768	345.933	92.660	82.212	64.228	63.709	43.126	4.356
MAILSI	225.70	65.960	291.660	273.599	73.285	65.022	50.798	50.388	34.108	2.916
PUNJAB	765.54	223.726	989.266	928.007	248.570	220.544	172.298	170.907	115.690	11.508
NASIR	44.887	13.118	58.005	54.413	14.575	12.931	10.103	10.021	6.783	0.656
JAMRAO & MITHRAO	238.839	69.800	308.639	289.527	77.551	68.807	53.755	53.321	36.094	3.404
GOTKI	168.448	49.228	217.676	204.197	54.695	48.528	37.912	37.606	25.456	2.518
ROHRI	76.866	22.464	99.330	93.179	24.958	22.144	17.300	17.160	11.616	1.150
DADU	79.073	23.109	102.182	95.855	25.675	22.780	17.797	17.653	11.950	1.196
SIND	608.11	177.72	785.83	737.17	197.454	175.191	136.867	135.762	91.899	8.924
KABUL	19.068	5.573	24.641	23.115	6.191	5.493	4.292	4.257	2.882	0.192
PAHARPUR	21.432	6.263	27.695	25.980	6.959	6.174	4.824	4.785	3.239	0.316
MARWAT	21.826	6.378	28.204	26.457	7.087	6.288	4.912	4.872	3.298	0.279
UPPER SWAT	79.733	23.302	103.035	96.655	25.889	22.970	17.945	17.801	12.049	0.825
NWFP	142.06	41.52	183.58	172.21	46.126	40.926	31.973	31.715	21.468	1.612
PROJECT	1515.712	442.961	1958.673	1837.385	492.151	436.660	341.138	338.384	229.058	22.044

Source : Appendix Tables No. 9.27 and 9.28.

provincially-approved "yardsticks". The yardsticks for Sind and NWFP were for roads 10 ft wide; to fit the 12 ft-wide pavements of the CRP, they have been raised on a proportionate basis.

O&M costs, like investment costs are estimated using market or financial prices. Their use in economic analysis requires adjustment to economic prices. The labour component, which is assumed to be 40 percent of the total O&M costs, has been adjusted by application of the shadow wage rate of 0.8, as already explained in Chapter 9.4 on economic and financial prices. The O&M costs for the three provinces are presented below. These costs are applicable to all of the systems in the respective provinces.

O & M Costs of CRP
(Rs./mile)

	Punjab	Sind	NWFP
Financial Costs	20928	20040	10807
Economic Costs	19254	18437	9942

O and M costs for each system have been estimated by multiplying the appropriate cost per mile by the length of road to be built in each system. The resulting costs are phased according to the construction schedule but

lagged one year. O&M costs reach their maximum level the year after construction is completed. These maximum costs are shown for each system in Table 9.6.

9.9 Results of Economic Analysis

Economic Analysis was performed for each of the 13 systems individually, for provincial aggregations of 4, 5 and 4 systems in Punjab, Sind and NWFP respectively, and for the Canal Roads Project with all of the 13 systems aggregated into one.

Table 9.7 presents in summary form the costs and benefits of CRP and the evalulative measures for each system and each aggregation. This table facilitates comparison of the various characteristics of the systems (length of new roads, cost factors, benefits) and also comparison of the evaluative measures NPW, B/C and IRR.

9.9.1 Aggregation at National and Provincial Levels

The Canal Roads Project considered in the aggregate is strongly feasible. NPW is Rs.1195.19 million, meaning that the discounted present worth of the benefits exceeds the PW of the costs by that amount. Comparison of the same benefits and costs before discounting __ Rs. 16949 million and Rs.2432 million respectively -- shows that total benefits are nearly seven times the costs, but since the benefits are further away in terms of time they are more sharply reduced by discounting. The B/C

Table 9.7

Summary of CRP : Costs, Benefits and Evaluative Measures

(Rs. millions)

SYSTEMS	New Roads To be Built Km.	Invest. Costs (Eco)	O & M Cost Per Year	O & M Cost 30 Yr Total	Total 30 Yr Costs	BENEFITS TOTAL OVER 30 Yrs. Incr. Agr Prod	Savings Hauling Cost	Canal D&M	Savings in VOC	Time Savings	Total Benefits	PW at 12% Benefits	PW at 12% Costs	NWP	B/C Ratio	IRR %
PUNJAB																
JHANG	213	179.40	2.56	68.89	248.28	1642.99	119.23	5.31	724.74	76.06	2568.33	400.67	148.81	251.86	2.69	26.0
GOGERA	140	179.08	1.68	45.36	174.43	2015.62	173.58	3.51	355.78	102.31	2650.79	410.06	106.22	303.84	3.86	33.0
DEPALPUR	363	345.93	4.36	117.4	463.33	1321.98	213.56	10.19	1029.63	164.33	2739.69	436.33	283.70	152.63	1.54	17.4
MAILSI	243	273.60	2.92	78.6	352.19	1334.09	64.10	3.48	664.79	69.74	2136.20	349.77	221.37	128.40	1.58	17.75
SUB TOTAL	959	928.01	11.51	310.2	1238.23	6314.68	570.47	22.48	2774.94	412.44	10095.0	1596.83	760.10	836.73	2.10	21.87
SIND																
NASIR	57	54.41	0.66	17.68	72.09	259.61	76.62	2.75	156.57	15.95	511.50	82.23	44.46	37.79	1.85	20.05
JAMRAO & MITHRAO	296	289.53	3.40	91.74	381.26	262.58	66.62	19.43	808.23	206.62	1363.48	229.87	236.07	-6.20	0.97	11.74
GOTKI	219	204.20	2.52	67.86	272.06	692.51	22.11	12.32	575.29	35.62	1337.84	209.08	167.16	41.92	1.25	14.64
ROHRI	100	93.18	1.15	30.99	124.17	188.02	13.88	3.99	268.03	38.99	512.92	82.82	76.28	6.54	1.09	13.04
DADU	104	95.86	1.20	32.23	128.09	64.20	10.97	5.26	301.05	31.06	412.53	69.95	78.55	-8.59	0.89	10.75
SUB TOTAL	776	737.17	8.92	240.5	977.67	1466.92	190.20	43.74	2109.17	328.24	4138.3	673.95	602.52	71.46	1.12	13.39
NWFP																
KABUL	31	23.12	0.19	5.17	28.29	148.28	7.15	1.32	101.04	5.87	263.66	41.17	18.39	22.77	2.24	22.69
PAHARPUR	51	25.98	0.32	8.52	34.50	47.18	4.99	0.00	156.45	12.96	221.58	36.54	21.24	15.30	1.72	19.32
MARWAT	45	26.46	0.28	7.52	33.98	404.10	9.66	0.73	146.15	27.76	588.40	96.07	21.39	74.69	4.49	37.87
UPPER SWAT	133	96.65	0.83	22.23	118.89	1101.53	70.37	4.18	409.09	56.49	1641.64	251.31	77.04	174.27	3.26	29.12
SUB TOTAL	260	172.21	1.62	43.4	215.65	1701.09	92.17	6.22	812.72	103.08	2715.3	425.09	138.06	287.03	3.08	28.47
PROJECT	1995	1837.38	22.04	594.2	2431.55	9482.69	852.84	72.44	5696.82	843.76	16948.6	2695.87	1500.7	1195.19	1.80	19.56

Source : Appendix Tables 9.11 and 9.29
Text Table 9.6

ratio is 1.80; PW of the benefit stream is close to twice that of the cost stream. The IRR is 19.56 percent, more than half again as high as the opportunity cost of capital. These strongly favourable evaluative measures, taken jointly with the indirect benefits listed in Section 9.7, affirm that the Canal Roads Project is both highly desirable and economically feasible. Thus, it should be funded and implemented.

Considering the CRP as three provincial subprojects, economic analysis reveals important differences among the three. The four systems in NWFP collectively have a NPW of Rs. 287.03 million, B/C ratio of 3.08:1, and IRR of 28.47 percent. The NWFP subproject could pay a rate of interest more than twice the opportunity rate. The present worth of the benefits - the discounted value of a 30-year stream of income that will not hit its stride for six years - is 33 percent more than the total undiscounted cost of the subproject. Collectively, the systems of NWFP present a very attractive investment.

The five systems in Sind taken together are feasible, but not by a wide margin. NPW is positive, but small considering the total cost. The B/C ratio, 1.12, is more than unity, but not much more. IRR is 13.39, close enough to the breakeven level at the 12 percent discount rate that there is little margin of safety. Non-quantifiable benefits should be reviewed before accepting or rejecting this subproject, but if funds are

scarce and must be rationed or parcelled out to provincial aggregations, it is clear that Sind is the province to put on the waiting list.

The four systems in Punjab, considered as one province-wide subproject, are intermediate in feasibility although a bit closer to NWFP than to Sind. NPW at Rs. 836.73 million is substantial, but the costs of the four systems in Punjab are substantial, too. B/C at 2.10:1 is certainly adequate, as anything greater than 1.0 is feasible. The IRR at 21.87 is at a level where there should be no complaints: nearly 10 points higher than required for feasibility. Clearly, the Punjab group of systems taken together represent a major project, at Rs. 1.238 million total costs over 30 years, and over 900 million rupees of investment cost in the first five years. But the benefits are there in profusion, and this collection of systems is strongly feasible and deserving of implementation.

9.9.2 Individual Systems

It is in consideration of the 13 systems individually that the evaluative measures of economic analysis show their real utility, permitting and aiding prioritization and providing a basis for cutting off one or more components - in this case, systems.

NPW by systems ranges from Rs. 303.84 millions (Gogera)

to Rs.-8.59 million (Dadu). NPW exceeds investment costs and total life-of-project costs in four cases, and is negative in two cases, one of which (Jamrao-Mithrao) has the second largest total costs of the 13 systems.

B/C ratio ranges from 4.49 to 0.89. It is less than unity in only two cases; it exceeds 2.0 in five cases and there are three systems with B/C ratio greater than 3.0.

IRRs ranges from 37.87 percent down to 10.75. Two systems (Jamrao-Mithrao and Dadu, both in Sind) have IRRs less than the opportunity cost of capital (12%) and thus are shown by this analysis to be economically infeasible. Nine of the 13 systems have IRRs of 17 percent or more, and are shown to be strong to very strong in terms of economic feasibility. The other two systems have IRRs above the discount rate used in this analysis, and thus are feasible although not strongly so. If the opportunity cost of copital were found to be higher, say 13 or 14 percent, then the feasibility of these systems (Gotki and Rohri) would be questionable.

The 13 system can be ranked or prioritized using the evaluative measures. The quantified measures presented in Table 9.7 were arrayed in descending order of desirability or feasibility, and the systems ranked for presentation in Table 9.8. B/C ratio and IRR give identical rankings that are somewhat (but not seriously)

at variance with the ranking of NPW. IRR, being independent of the size of the project and also independent of the discount rate, is probably the best of the evaluative measures. Numerical rankings according to the three measures can be added and the totals ranked to provides a fourth, combined ranking, as shown in the last column of Table 9.8. All four lists are unanimous in placing Rohri, Jamrao-Mithrao and Dadu at the bottom of the list: the first to be eliminated.

Table 9.8

Ranking of Systems by Evaluative Measures

Rank	NPW	B/C	IRR	Combined
1	Gogera	Marwat	Marwat	Gogera
2	Jhang	Gogera	Gogera	Marwat
3	Upper Swat	Upper Swat	Upper Swat	Upper Swat
4	Depalpur	Jhang	Jhang	Jhang
5	Mailsi	Kabul	Kabul	Kabul
6	Marwat	Nasir	Nasir	Nasir
7	Gotki	Paharpur	Paharpur	Mailsi
8	Nasir	Mailsi	Mailsi	Depalpur
9	Kabul	Depalpur	Depalpur	Paharpur
10	Paharpur	Gotki	Gotki	Gotki
11	Rohri	Rohri	Rohri	Rohri
12	Jamrao-Mithrao	Jamrao-Mithrao	Jamrao-Mithrao	Jamrao-Mithrao
13	Dadu	Dadu	Dadu	Dadu

9.10 Sensitivity Analysis of Aggregated Canal Roads Project

Because of the importance of the quantified measures of project feasibility and desirability, and the possibility of errors in estimation of costs, benefits, schedules etc, it may be important to know the effects on (especially) IRR of modifications of certain of the elements in the calculations. These can be determined though sensitivity analysis.

Sensitivity analysis was performed at the aggregated project level (including all 13 systems) to test the following variations in the basic cost and benefit structure :

1. Benefits decreased by 10 percent.
2. Capital costs increased by 10 percent.
3. Combination of 1 and 2: benefits decreased 10 percent and capital costs increased by 10 percent at the same time.
4. Salvage value of the equipment introduced as a negative cost in the sixth year.
5. Period of analysis (life of project) reduced from 30 years to 20 years (equipment salvage value included).
6. Same as 5, but period reduced to 15 years.
7. Implementation of the project spread over 8 years instead of 5.
8. Foreign Exchange component of costs excluded from consideration.

9. Maximum reduction of benefits that permits IRR >12 percent.
10. Maximum increase in costs that permits IRR >12 percent.
11. Combination of benefit reduction and cost increase producing IRR >12.

The rationale and the results of each of these alternatives is reported, discussed and interpreted in the following section, and results are summarized in Table 9.9. Detailed analysis can be found in Appendix Table 9.32 - 9.42.

1. Benefits reduced by 10 percent. Reduction of benefits can be approached in two ways. First, the consultants' estimates of such things as the area of impact, the degree of response, the percentage of yield increase, the value of a person's time, economic prices, etc. may be in error, and correction may reduce the benefits. Second, some of the benefits may be considered inadmissible or only partly admissable, and their elimination or reduction would reduce the total. (Logically, the errors could as well be in the other direction, so that correction would increase the benefits. Any other benefits, or increase in the benefits allowed, would increase the total. In any of these cases, of course, "No problem!").

TABLE 9.9

SUMMARY OF SENSITIVITY ANALYSIS
FOR AGGREGATED CANAL ROADS PROJECT

ALT	BENEFITS TOTAL OVER 30 Yrs.						COSTS		Total 30 Yr Costs	PW at 12%		NPW	B/C Ratio	IRR %
	Incr.Agr Prod	Savings Hauling Cost	Canal O&M	Savings in VOC	Time Savings	Total Benefits	Invest. Costs (Eco)	O & M COSTS		Benefits	Costs			
0	9482.69	852.84	72.44	5696.82	843.76	16948.56	1837.38	594.2	2431.55	2695.87	1500.7	1195.19	1.80	19.56
I	8534.42	767.56	65.20	5127.14	759.38	15253.70	1837.38	594.2	2431.55	2426.28	1500.7	925.60	1.62	17.98
II	9482.69	852.84	72.44	5696.82	843.76	16948.56	2021.12	594.2	2615.29	2695.87	1638.2	1057.66	1.65	18.22
IIA	9482.69	852.84	72.44	5696.82	843.76	16948.6	2021.12	653.6	2674.71	2695.87	1650.7	1045.12	1.63	18.13
III	8534.42	767.56	65.20	5127.14	759.38	15253.70	2021.12	594.2	2615.29	2426.28	1638.2	788.07	1.48	16.82
IV	9482.69	852.84	72.44	5696.82	843.76	16948.56	1772.53	594.2	2366.70	2695.87	1467.8	1228.05	1.84	19.80
V	4825.59	516.55	45.56	3095.30	448.51	8931.51	1772.53	373.7	2146.26	2226.91	1454.9	772.00	1.53	18.52
VI	2712.36	349.62	32.12	1911.75	291.85	5297.70	1772.53	263.5	2036.04	1753.37	1440.4	312.97	1.22	15.65
VII	9241.46	773.36	64.29	5329.23	781.66	16190.0	1837.38	523.5	2360.93	2286.56	1272.0	1014.59	1.80	19.05
VIII	9482.69	852.84	72.44	5696.82	843.76	16948.6	1394.73	594.2	1988.90	2695.87	1126.0	1569.85	2.39	25.27
IX	5310.31	477.59	40.57	3190.22	472.51	9491.2	1837.38	594.2	2431.55	1509.69	1500.7	9.01	1.01	12.08
X	9482.69	852.84	72.44	5696.82	843.76	16948.6	3215.42	594.2	3809.59	2695.87	2532.2	163.67	1.06	12.76
XI	7586.15	682.27	57.95	4557.46	675.01	13558.8	2664.21	594.2	3258.38	2156.70	2119.6	37.11	1.02	12.22

0 Original analysis, as basis for comparision
I Benefits decreased by 10%
II Capital Costs increased by 10%
IIA Capital and O&M Costs increased by 10%
III Benefits decreased and Capital Costs increased by 10%
IV With salvage value of equipments.
V With salvage value of equipment; life of project 20 years.
VI With salvage value of equipment; life of project 15 years.
VII Construction period enhanced to 8 years.
VIII FX component excluded
IX Benefits decreased by 44%
X Capital Costs increased by 75%
XI Benefits decreased by 20% & Capital Costs increased by 45%

Source : Appendix Tables No. 9.32 to 9.42

BEST AVAILABLE DOCUMENT

Reduction of total benefits by 10 percent results in reducing IRR for the aggregated all-Pakistan CRP from 19.56 percent to 17.98 percent. Thus, IRR is lowered by 1.58 percentage points or about one -twelfth. Specific illustrations of changes in the benefits that could be encompassed within this 10 percent reduction are these :

a. Eliminate O&M savings (reduces benefits by less than one-half percent).
b. Eliminate benefits from time savings (reduces benefits by five percent).
c. Eliminate benefits from savings in off-road hauling (reduces benefits by 5 percent).
d. Reduce benefits from increase in agricultural production by Rs. 1695 million, i.e. cut out 18 percent of that set of benefits.
e. Reduce benefits from VOC savings by Rs.1695 million, i.e. cut out 30 percent of that benefit.
f. Eliminate Time Savings, Off-road Hauling and Canal O&M savings (all three), and the reduction of benefits will be 10.4 percent.

2. Capital costs increased 10 percent. Application of this idea is not hard to see. Costs were estimated using the best information available, but error could have crept in, and situations and costs may change. (Engineering estimates of costs are considered to be subject to +- 15 percent error.) Deferral of implementation for one year would probably raise costs

by about that much. Generally, the inflation factor is disregarded in economic analysis because it will affect costs and benefits more or less equally, leaving negligible impact on the results. However, quirks in the timing and amount of inflation in different sectors could have the effect of raising costs more than benefits. Ten percent increase in capital costs affects IRR measurably but not importantly; IRR is reduced from 19.56 to 18.22.

The question may arise, why increase only capital costs? Are not O&M costs equally subject to errors, and even more likely to be inflated? To provide a response to this question, another test was run where both capital and O&M costs were increased by 10 percent. Impact on IRR was minimal, 0.1 more than with an increase in only capital costs. IRR was 18.13 with all costs escalated and 18.22 with only capital costs raised: an unimportant difference.

In view of the small impact of higher O&M costs, the engineers suggestion to add a sinking fund to provide for repaving on a 10-year schedule should be seriously considered and if possible implemented. This change would increase overall costs on the order of 10 percent, largely through impact on O&M. Institutional difficulties are likely to be a greater deterrent to the sinking fund concept than its affect on IRR.

3. Combination of Benefits down and Costs up. If the worst case should prevail -- the engineers' estimates of costs are too low and the economists' estimates of benefits are too high -- the aggregated CRP would still be feasible. IRR would be 16.82 percent, well below the original 19.56 percent but still comfortably above the 12 percent cut-off level or even the 13-15 percent marginal zone.

4. Salvage value of equipment introduced. The equipment to be purchased in the first and second years of the project will not be fully expended when the project is complete, if it has been given proper care and adequate maintenance. Replacement parts and some training are included in the budget of costs to assure proper care and maintenance. Therefore, in this sensitivity test, the salvage value of the machinery is introduced as a negative cost in the 6th year. The effect of this benefit through reduction of total costs is a modest improvement in feasibility; IRR increases from 19.56 to 19.80 percent.

5 and 6. Shorten period of analysis to 20 or 15 years. At least two reasons may exist for desiring a period of analysis shorter than 30 years. If the period is to coincide with the life of the roads being built, it may be charged that 30 years is too long, given the 10-year design life of the roads. While "design life" in engineering parlance does not mean zero utility at the

end of the period, some concession may be allowed, by consideration of a life shorter than 30 years. The second reason for a shorter period of analysis is that it is impossible to foretell with accuracy what will happen 30 years in the future, and the uncertainty is vastly reduced by halving the length of the forecast. Additionally, policy makers may not be interested in benefits for the next generation; they need to allocate this year's funds to meet this year's, or possibly this decade's, needs.

The feasibility of the CRP holds up well under analysi for 20 and even for 15 years. IRR, originally 19.56 percent (for 30 years) is reduced to 18.52 for 20 years and to 15.65 for 15 years.

7. Longer implementation period. The experience of past projects in Pakistan, most specifically that of the Canal Rehabilitation Project (Phase I), indicates that a project designed for completion in 5 years may in reality require 7, 8 or more years. The effect of such prolongation is analyzed here. Investment Costs of the project were originally spread over five years in the proportions of 27, 24, 19, 18, and 12 percent respectively. The most likely scenario for prolongation and design stages, is that various problems encountered in the first two years -- after heavy start-up costs have been incurred-- will force reprogramming of

remaining funds and schedules. A hypothetical scenario for this sensitivity test calls for redistribution of remaining funds after 1 1/2 years, with resulting expenditure of 18.9, 15.6, 9.5, 9.5, 11.4, 11.4, 11.3 and 12.4 percent of funds annually over the 8 years period. Because fixed-unit "lumpy" items such as technical assistance and consulting engineering must be continued for 3 additional years, total costs are increased by 2 percent. The phasing in of benefits and O and M costs must also be modified, based on achievement of 5, 10, 10, 10, 15, 15, 15, and 20 percent of the work in each year. In this case O&M were deferred one additional year, because standard road construction contracts require the contractor to provide any needed maintenance in the first year after completion.

The effect of the time-wise redistribution of costs and benefits is to lower the IRR from 19.56 to 19.05 percent. Most of this effect arises from the postponement of benefits, while investment costs are still concentrated "up front". Had the redistribution of investment costs been applied only to the costs budgeted for years 3, 4 and 5 (as would be the case if after two years of a five year project it was recognized that a longer period was required, and the remaining costs rescheduled), the effect on IRR probably would have been somewhat more adverse. The main point of this sensitivity test is that an 8-year project is

inherently little if any less feasible than the same project on a 5-year schedule.

8. Foreign exchange component excluded. It is intended that the foreign exchange costs of the project (for equipment, imported parts and technical assistance) will be funded as a grant to Pakistan. These FX costs have been retained for economic analysis, because they are most certainly a cost to the funding agency. However, economic analysis from the viewpoint of the Government of Pakistan must exclude from analysis of costs these items that for them are not costs. The exclusion of FX costs reduces economic investment costs by about 24 percent and raises the IRR to 25.27 percent. The project, which it is hoped will be viewed favourably by the funding agency with IRR of 19.56 percent, certainly should be acceptable to the host government with IRR above 25 percent.

9, 10 and 11. Maximize Adversity to Reduce IRR to 12 Percent. To prepare for the extreme "worst case" scenario, or to find the limits within which the project is feasible, additional sensitivity tests were run in which benefits were progressively reduced, costs were progressively increased, and combinations of major changes in benefits and costs tried until a minimum or near-minimum acceptable IRR (>12%) was produced.

Benefits can be reduced by as much as 45 percent

without reducing the IRR below 12 percent. A reduction of this magnitude would include these speculative possibilities:

1. Wipe out all benefits other than Agricultural Production Increase.
2. Reduce agricultural production and VOC benefits to half, and eliminate all other benefits.
3. Reduced yield impact of the new roads to only one fourth as much as consultants' estimates, so that agricultural production benefit is cut to one fourth, with other benefits remaining as estimated.

Costs could be increased by 75 percent and the project would still show an acceptable IRR. Engineers' estimates of costs normally allow a margin of error of - + 15 percent; the thought of greater errors than that is offensive. However different contracting arrangements could proudce higher costs. Large contractors maintain their own fleets of equipment and therefore bear overhead costs that smaller contractors escape by renting equipment. If a greater share or all the work were to be done by large contractors, costs would escalate and could conceivably double. Such an arrangement would be so great a departure from the present design of the project that a cost escalation greater than 15 percent is very unlikely to happen.

The adversities already explored to their extremes are

more likely to occur with lessened impact but in combination. One of the many combinations that could produce an IRR as low as 12 percent is benefits down 20 percent, capital costs up 50 percent.

9.11 Sensitivity Analysis of Individual Systems

Sensitivity tests were performed on the economic analysis of the 13 individual systems in a pattern comparable to the tests performed on the aggregated Canal Roads Project. However, questions of equipment salvage value, shorter period of analysis, longer construction period, and foreign exchange component were considered to be satisfactorily resolved at the project level and/or irrelevant for individual systems. Therefore, analyses were performed to show the effects of the following :

1. Benefits decreased by 10 percent.
2. Capital costs increased by 10 percent.
3. Both of the above, at the same time.
4. Maximum decrease of benefits to yield IRR >= 12 percent.
5. Maximum capital cost increase to yield IRR >= 12 percent.

These tests are made in Appendix tables 9.44.1 through 9.56.5. The results are summarized in Table 9.10 and the results and their implications for the systems are discussed below.

TABLE 9.10

SUMMARY OF SENSITIVITY ANALYSIS FOR INDIVIDUAL SYSTEMS

(Impact on IRR)

SYSTEMS	ORIGINAL IRR %	BENEFITS DECREASED by 10%	CAPITAL COSTS INCREASED by 10%	BOTH BENEFITS -10% & CAPITAL COSTS +10 %	MAXIMUM FOR IRR > 12% BENEFITS DECREASE %	MAXIMUM FOR IRR > 12% CAPITAL COSTS INCREASE %
JHANG	26.09	24.20	24.48	22.70	60	50
GOGERA	33.05	30.74	31.03	28.87	74	300
DEPALPUR	17.40	15.93	16.15	14.86	34	55
MAILSI	17.75	16.32	16.54	15.20	35	55
NASIR	20.05	18.52	18.71	17.27	45	90
JAMRAO & MITHRAO	11.74	12.91 (a)	12.83 (a)	14.05 (a)	+ 2.75 (b)	- 3.85 (b)
GOTKI	14.64	13.40	13.51	12.39	25	90
ROHRI	13.04	11.78	11.86	10.89	8	9
DADU	10.75	11.80 (a)	11.70 (a)	13.01 (a)	+ 12.30(b)	- 13 (b)
KABUL	22.69	21.02	21.23	19.62	55	130
PAHARPUR	19.32	17.70	17.90	16.43	41	78
MARWAT	37.87	35.22	35.51	33.00	77.5	375
UPPER SWAT	29.12	27.08	27.31	25.38	69	240

(a) Benefits are increased and Capital Costs decreased, rather than the reverse

(b) Minimum rather than maximum change that will produce IRR > 12%

Source : Appendix Tables No. 9.29, 9.44, to 9.56

BEST AVAILABLE DOCUMENT

Jhang System. The original IRR of 26.09 percent for Jhang system is only modestly affected by adverse changes of 10 percent in benefits and costs. Ten percent lower benefits and 10 percent higher investment costs reduced IRR to 24.2 and 24.48 percent respectively. The combination of both changes reduced IRR to 22.70 percent. An acceptable IRR was obtained with reduction of benefits as great as 60 percent or increase of investment costs by as much as 175 percent. In Jhang system, benefits from agricultural production increase make up 64 percent of total benefits; if these benefits were only one-tenth as much as estimated, the project would still be feasible. Alternatively, all benefits could be ignored except for agricultural production increase, and even they could drop 30 percent below estimates, and IRR >12 percent would still be there.

Gogera System. This system as originally analyzed had the second highest IRR of all the systems: 33.05 percent. Reduction of benefits or increase in investment costs by 10 percent leave Gogera with IRR still over 30 percent; even with 10 percent adversities on both sides simultaneously, IRR would be 28.87 percent. Investment costs could be quadrupled, or 3/4 of the benefits lost or ignored, and IRR would still be >12 percent. It is unnecessary to speculate on the highly improbable combinations that could reduce this system to infeasibility.

Depalpur System. The IRR of this system, at 17.40 percent, indicates strong feasibility although it is less overwhelming than others in Punjab. The usual 10 percent adverse change in benefits and capital costs reduce that IRR to around 16 percent; both together result in 14.86 percent. If 90 percent of the VOC benefits evaporated, or if 3/4 of agricultural production benefits failed to materialize, the loss of benefits would put IRR at approximately 12 percent.

Mailsi Systems. Mailsi system had an IRR of 17.75 percent in the original analysis. Its sensitivity to 10 percent variations in benefits or in capital costs follows the pattern of the other systems and yields IRRs of 16.32 and 16.54 percent respectively. Combined, these adversities reduce IRR to 15.20 percent. An acceptable (>12 %) IRR is produced even with benefits reduced by 35 percent or capital costs increased by 55 percent. Reduction of benefits to that extent would cover total elimination of VOC and Canal O&M benefits, or wiping out of 50 percent of the agricultural sector benefits of production increases, hauling cost reductions and time savings.

Nasir System had IRR of 20.05 in the original economic analysis. With 10 percent adverse changes in benefits and capital costs, IRR is reduced to 18.52 and 18.71 percent respectively, and with both to 17.27 percent.

Nasir can accomodate a 45 percent reduction of benefits, or a 90 percent increase in capital costs, before dropping its IRR belows 12 percent and losing its feasibility. The tolerable loss of benefits is large enough to include about 90 percent of production increase, or 92 percent of all other benefits.

Jamrao-Mithrao System. This system is one out of the two with IRR less than 12 percent threshold of feasibility in the original analysis; its IRR was 11.74 percent. A sensitivity test in such a case should show the favorable changes in benefits and capital costs needed to put IRR at an acceptable level. Ten percent change in either factor is more than sufficient, producing IRRs of 12.91 and 12.83 percent. The needed reduction of costs--only 3.85 percent -- is well within the range of permissable error in engineers' costs estimates. The needed increase in benefits -- 2.75 percent -- could arise from, among other sources, a modest increase in area of crops. In Jamrao-Mithrao system, only 10 percent of the impacted area was under the major crops, which in this study represent all agricultural production. If this low production of major crops inaccurately reflects the importance of agriculture there, changes in the agricultural factors considered would improve the rating of this region. Such factors which were not considered or measured, but which in retrospect might have been, are yields of irrigated crops other than wheat, rice,

cotton, and cane; transport-induced increases in yields of barani crops; and an increase in cropland area because of development or reclamation of land induced by improved accessibility and better transport. Any of these could provide the small additional benefits needed to make CRP feasible in Jamrao-Mithrao.

Gotki System was feasible from the outset, with IRR of 14.64 percent. Reduction of benefits or increase in capital costs by 10 percent would depress the IRR to 13.40 or 13.51 percent respectively; the two adversities together depress IRR to 12.39 percent. Actually a benefit reduction of 25 percent or a capital cost increase of 27 percent would be acceptable; it would still produce an IRR >12 percent. The permissable benefit reduction is about two-thirds of VOC or about half of agricultural production benefits.

Rohri System. IRR was 13.04 percent in the original analysis; obviously not much reduction can be accommodated within the 1.04 percent margin of safety. Ten percent changes in benefits or capital costs depress IRR to 11.78 or 11.86 percent; the tolerable changes to have IRR >12 percent are -8 percent for benefits and +9 percent for costs. The permissible benefit reduction is equivalent to elimination of the time saving benefit, or loss of the hauling and canal O&M benefits plus a 10 percent reduction in production benefits.

Dadu System is the "tail-ender," with the lowest IRR of the 13 systems: 10.75 percent. Benefit increase or cost reduction of 10 percent both fall short of achieving the threshold of feasibility (12%); what is needed is to raise benefit by 12.30 percent or to reduce capital costs by 13.00 percent. In Dadu district, the proportion of land in major crops is even lower than in the Jamrao-Mithrao system, and only 10 percent of the land in the district is sown to crops of any sort. Yet 15 percent of the reported area in Dadu district -- far more area than is currently sown to crops -- is "culturable waste", suitable for cultivation but not so used. This suggests that measurement of benefits of an improved roads network, as was done in this analysis, might better have considered the potential for agriculture rather than its achievement to date. Improved transport probably would induce some change in cropping pattern and increase in intensity of use which might enhance the benefits desired for making the project feasible.

Kabul System has a very strong IRR:i.e. 22.69 percent. Ten percent variation in benefits or costs on both scarcely dampen the vigor and appeal of this system as an investment; these adverse leave IRRs at 21.02, 21.23 and 19.62 percent respectively. Reduction of the benefits by 55 percent or increase in capital costs by 130 percent still produce marginally accceptable IRR's (>12%). Such a level of increase in costs is

inconceivable, short of total rewriting of road specifications or procedures. Reduction of benefits by 55 percent would encompass elimination of all benefits from increases in production, or elimination of all other benefits and loss of 20 percent of production benefits.

Paharpur System was the weakest system in NWFP in terms of feasibility; it had an IRR of "only" 19.32 percent. After 10 percent adverse change in benefits or costs or both, IRR remains 17.70, 17.90 and 16.43 percent respectively. Benefits could be decreased by 41 percent, or capital costs increased by 78 percent, without voiding Paharpur's feasibility. Agricultural benefits are proportionately very low in this system, so if all of production, hauling, time savings and canal O&M benefits were eliminated and VOC benefits cut by 16 percent, the system would still be feasible. Alternatively, 58 percent of VOC savings could be spared and feasibility still preserved, if other benefits were realized as calculated.

Marwat System had the highest IRR of any system (37.87 percent). Feasibility of CRP in this system is so strong that adverse changes of 10 percent in benefit, capital costs or both have negligible impact, leaving the system with IRRs above 30 percent. Benefits could be reduced by 77.5 percent, or capital costs increased by 375 percent, before feasibility is endangered. In Marwat system, VOC

benefits make up only 25 percent of the total, but they are adequate to justify CRP for the entire system. Alternatively, one-third of agricultural production benefits -- disregarding all other benefits -- yields IRR >12 percent. Weakness of Marwat system's feasibility is difficult to find.

Upper Swat System ranked third in the series in feasibility, having 29.12 percent IRR. Unfavourable changes of 10 percent in benefit, capital costs or a combination of the two leave IRRs of 27.08, 27.31, and 25.38 percent respectively -- still very strong. If only 31 percent of the estimated benefits materialized (69 percent loss), or if costs were more than tripled (increase of 240 percent), IRR would still be more than 12 percent. Less than half (46 percent) of production increase benefits are adequate to support the system's feasibility. Alternatively, the other benefits can support feasibility without any benefits from agricultural production increase.

9.12 Financial Analysis and Capital Recovery

Financial analysis is undertaken to assess the self-liquidating capacity of the project and to work out the potential for repayment by the project beneficiaries. For these purposes, local investment and O&M costs are viewed as a loan from public funds (except the foreign exchange component, considered as commodity aid); which

has to be repaid by the project beneficiaries. The financial analysis will therefore provide a basis for consideration of reimbursement and cost sharing arrangements.

Five different benefits of the project have been identified and quantified. The major share of the benefits come from the agriculture sector, which includes increases in production, savings in off-road hauling expenses, and time savings (as the saved time will be utilized in farming operations). The other important source is VOC savings. The benefits are contributed by these two sources in the proportions of 66.24 percent and 33.76 percent respectively. Costs to be recovered are allocated on the same basis.

Whether such cost recovery or reimbursement to the implementing agency or government is to be undertaken is a decision outside the scope of financial analysis, which merely shows the payments that would be required.

For calculating the total annual recoverable costs, the capital cost plus interest during construction period has been annualized over a period of 25 years at an interest rate of 12 percent. Annual operation and maintenance costs are added to this cost which becomes the total annual recoverable cost. The capital recovery has been estimated on a per acre basis in the impacted area and per kilometer travelled by commercial vehicles,

taking 20th year of the project when the benefits are assumed to be constant.

Five different alternatives of repayment of costs are considered: repayment of full capital costs plus operation and maintenance costs; 25, 50 and 75 percent subsidy of the capital costs (i.e. repayment of 75, 50 and 25 percent of the capital costs plus O&M costs); and repayment of only operation and maintenance costs These alternatives and their costs and recovery charges are shown in Table 9.11.

Only Rs. 18.74 per acre need be charged per year, or Rs. 9.37 per acre for each of two installments (Kharif and Rabi seasons), for the recovery of the agricultural share of costs in the full recovery alternative. This amount decreases with the increase in subsidy. The vehicle users' share of project costs should be borne by vehicle owners or users. The charges to be paid by commercial vehicles, with no changes to any other vehicles, come to Rs.0.64 per Kilometer travelled for the full recovery alternative, which is less than even the minimum VOC savings of commercial vehicles (Rs.0.90 per km for trucks and tractor-trollies). This shows that the vehicles have not to pay even a single penny out-of-pocket except what they have saved through reduced VOC due to the implementation of this project.

Table 9.11

Repayment Capacity and Capital Recovery Charges

Repayment Alternatives	Amortized Capital Cost	Operation & Maintenance	Total Cost	Recovery Charges Per Acre	Recovery Charges Per KM.
	(Mil.Rs.)	(Mil.Rs.)	(Mil.Rs)	(Rs.)	(Rs.)
100% of Amortized capital cost + O&M cost.	285.234	23.408	281.642	18.74	0.64
75% of Amortized capital cost + O&M cost.	193.676	23.408	217.084	14.44	0.50
50% of Amortized capital cost + O&M cost.	129.117	23.408	152.525	10.15	0.35
25% of Amortized capital cost + O&M cost.	64.558	23.408	87.966	5.85	0.20
O&M cost only	---	23.408	23.408	1.56	0.05

9.13 Summary and Conclusions

A summary of the relevant portions of the foregoing chapter is in reality a summary of the findings of economic and financial analysis. All of the pages and tables, words and numbers in sections 9.1 through 9.8 are preparatory to and in support of the analyses of 9.9 and 9.10, while the sensitivity analysis is an examination of the validity of the economic analysis.

Economic and financial analysis provides very clear indications that the Canal Roads Project is feasible. The aggregated CRP, including all 13 systems studied, is feasible with a strong IRR of 19.56 percent. Viewed as three subprojects, one for each province, ranking is obvious: NWFP and Punjab are feasible with IRRs of 28.47 and 21.87 percent respectively, while Sind is only marginally feasible, having an IRR of 13.39 percent.

The 13 systems are all desirable, but not all are equally feasible. The IRRs of these systems range from 10.75 to 33 percent; two systems in Sind are not economically feasible, having IRRs less than the opportunity cost of capital (12%). However, even those systems are close enough, at 10.75 percent for Dadu and 11.74 for Jamrao-Mithrao, that the non-quantifiable benefits might justify the small level of subsidy to these systems that would be necessary for them, too, to be accepted and funded.

To test the sensitivity of the analytical results to changing circumstances and/or errors of estimation, and to establish the validity of those results, a number of sensitivity tests were applied. The results of the tests confirmed that the most likely kinds and extents of errors or changes in circumstances, either individually or, in groups, reduce the IRR of the project but not enough to interfere with feasibility.

Financial Analysis reveals that full recovery of capital and O&M costs requires modest charges to or payments from the beneficiaries, in amounts that are less than the benefits received. Agriculture receives 66 percent of the benefits. A proportionate share of the project's costs would be recovered in 25 years by a charge to the agricultural sector of Rs. 18.74 per acre of the impacted area per year, or Rs. 9.37 per acre per season. Vehicle operators will receive 34 percent of the benefits in the form of lower VOCs. If only commercial vehicles paid a surcharge or tax of Rs. 0.64 per km of use of canal roads, their payment, though less than the minimum savings of Rs.0.90 per km of benefit received, would repay in full within 25 years the vehicles users' share of the costs, plus interest at 12 percent.

On the basis of economic and financial analysis and the findings from these analyses, certain conclusions and recommendations can be formulated. The Canal Roads

Project viewed aggregatively is feasible and desirable. If possible, it should be implemented. If the entire project cannot be funded at present, or if it can be funded only in part, then reduction of the scope or deferral of a portion of the work is appropriate, and the economic analysis provides a basis for reduction of the whole or prioritization of the elements. However, it is recommended that such prioritization of the elements or rejection of a portion of them should not be done on the basis of provincial grouping, but rather on the basis of individual systems.

Selection of systems for implementation should be based on the feasibility ranking as reported and discussed in section 9.9. Top-ranking systems should be funded, unquestionably, and as promptly as possible. Lower-ranking systems should also be included, if and when funds are sufficient.

This analysis and evaluation, by reason of its ranking of the systems in order of feasibility, necessarily excludes from implementation the lowest ranking systems. Yet it is very likely that some of the roads in Dadu and Jamrao-Mithrao systems, for example, would have sufficient impact on their own localities that they are fully worthy of the investment required, and it is also likely that certain roads in the higher - ranking systems make less than proportionate contribution to the feasibility of CRP in those systems. Such variation

among individual roads could not be shown because of the "system package" basis of the present study. Refinement of the evaluation to include a road-by-road review and prioritization is a step that is highly recommended.

In Table 9.12, the systems are listed according to their ranking, using a combination of the rankings provided by NPW, B/C and IRR, along with the Economic Investment Cost of each system. Accumulated costs are shown, so that if, for example, $ 15 million is available for CRP, the top-ranking three systems would be selected. Inclusion of additional systems should give priority or preference to the systems according to their position in this list.

Table 9.12

Ranking of CRP Systems for Prioritization, and Costs

(in Millions)

RANK	SYSTEMS	ECONOMIC INVESTMENT COST RUPEES	ACCUMULATED ECONOMIC INVESTMENT COST		FINANCIAL COST	ACCUMULATED FINANCIAL COST	
			RUPEES	US DOLLARS*	RUPEES	RUPEES	US DOLLARS*
1.	GOGERA	129.08	129.08	7.54	137.60	137.60	8.04
2.	MARWAT	26.46	155.54	9.09	28.20	165.80	9.68
3.	UPPER SWAT	96.65	252.19	14.73	103.04	268.84	15.70
4.	JHANG	179.40	431.59	25.21	191.24	460.08	26.87
5.	KABUL	23.12	454.71	26.56	24.64	484.72	28.31
6.	NASIR	54.41	509.12	29.74	58.01	542.72	31.70
7.	MAILSI	273.60	782.72	45.72	291.66	834.38	48.74
8.	DEPALPUR	345.93	1128.65	65.93	368.77	1203.15	70.28
9.	PAHARPUR	25.98	1154.63	67.44	27.70	1230.85	71.90
10.	GOTKI	204.2[illegible]	1358.83	79.37	217.68	1448.52	84.61
11.	ROHRI	93.18	1452.01	84.81	99.33	1547.85	90.41
12.	JAMRAO & MITHRAO	289.53	1741.54	101.73	308.64	1856.49	108.44
13.	DADU	95.86	1837.40	107.32	102.18	1958.67	114.41

* Rupees converted to Dollars at Rs. 17.12 per $ 1.00.

Source : Based on previous Tables and Calculations.

BEST AVAILABLE DOCUMENT

UNITED STATES AGENCY
FOR INTERNATIONAL DEVELOPMENT
SHELADIA ASSOCIATES INC.

CANAL ROADS FEASIBILITY STUDY

VOLUME II

TABLES FIGURES
APPENDICES

MUHAMMAD AYOOB ABIDI AND
ASSOCIATES (PRIVATE) LTD.

MAY 1987

246

VOLUME II

TABLE OF CONTENTS

	Page
Title Page	i
Table of Contents	ii
Text	Volume I
List of Tables	iii
List of Figures	vii
List of Appendices	viii
Maps	Volume III

247

LIST OF TABLES

Section	Title	Page
9.1	Financial and Economic Prices of Agricultural Commodities	248
9.2	Area and Population of Irrigation Systems	249
9.3	Area Production and Yield of Major Crops in Selected Districts	250
9.4	Area of Major Crops in Impacted Area in Project, Years 0 to 20	251
9.5	Yields of Major Crops in Districts and Systems, and Projected Yields in 20 Years Under Normal Growth	252
9.6	Area Yield and Production of Major Crops in Impacted Area, by Systems	253
9.7.1-13	Normal Growth in Agriculture : Projection of Area, Yield and Production of Major Crops for Each of 13 Systems	254
9.8	Increase in Agricultural Yields Attributable to Canal Roads Project	267
9.9.1-13	Accelerated growth in Agriculture : Projection of Area, Yield and Production of Major Crops with Canal Roads Project, for each of 13 Systems	268
9.10.1-13	Amount and Value of Increases in Production of Major Crops, for each of 13 Systems	281
9.11	Old and New Road Networks and Reduction in Off-Road Hauling Distance	294
9.12	Disposition of Sugarcane by System	295
9.13.1-13	Agricultural Production to be Hauled, and Savings from New Roads, for each of 13 Systems	296
9.14	Canal Maintenance Savings With Road Construction	309
9.15	Number of Motor Vehicles "On Road" by Types, The Punjab, 1972 to 1985	310

LIST OF TABLES

Section	Title	Page
9.16	Road Maintained by Punjab Highway Department, by Types, 1972 to 1985	310A
9.17	Vehicle Operating Costs on Paved and Unpaved Roads	311
9.18	Traffic Volume by Type of Vehicle and by Systems	312
9.19.1-13	Average Motorized Traffic Volume (Vehicle per Day, Both Directions), for each of of 13 Systems	313
9.20.1-13	Mileage Covered by Motorized Vehicles, for each of 13 Systems	326
9.21.1-13	Economic Costs of Running Vehicles (Without Improvement) for each of 13 Systems	339
9.22.1-13	Economic Costs of Running Vehicles (With Improvement) for each of 13 Systems	352
9.23.1-13	Benefits from VOC Savings, for each of 13 Systems	365
9.24	Potential Time Savings of Local Travellers	378
9.25.1	Value of Time Savings, Systems in Punjab	379
9.25.2	Value of Time Savings, Systems in Sind	380
9.25.3	Value of Time Savings, Systems in NWFP	381
9.26	Investment Costs at Market Price, CRP	382
9.27	Economic Investment Costs of CRP by System and by Years	383
9.28	Operation and Maintenance Costs for CRP	384
9.29.1-13	Economic Analysis of Canal Roads in each 13 Systems: Benefits, Costs, and Measures of Project Desirability	385
9.30.1-13	Economic Analysis of Canal Roads in each of Three Provinces: Benfits, Costs and Measures of Project Desirability	398

249

LIST OF TABLES

Section	Title	Page
9.31	Economic Analysis of Canal Roads in Pakistan: Benefits, Costs and Measures of Project Desirability.	401
9.32	Sensitivity Analysis of Aggrigated Project, Alt I.	402
9.33	Sensitivity Analysis of Aggregated Project, Alt. II	403
9.33A	Sensitivity Analysis of Aggregated Project Alt. IIA	404
9.34	Sensitivity Analysis of Aggregated Project Alt. III	405
9.35	Sensitivity Analysis of Aggregated Project, Alt. IV	406
9.36	Sensitivity Analysis of Aggregated Project Alt. V	407
9.37	Sensitivity Analysis of Aggregated Project, Alt. VI	408
9.38	Sensitivity Analysis of Aggregated Project, Alt. VII	409
9.39	Sensitivity Analysis of Aggregated Project, Alt. VIII	410
9.40	Sensitivity Analysis of Aggregated Project, Alt. IX	411
9.41	Sensitivity Analysis of Aggregated Project, Alt. X	412
9.42	Sensitivity Analysis of Aggregated Project, Alt. XI	413
9.43	Summary of Sensitivity Analysis for Aggregated Canal Roads Project	414
9.44.1-5	Sensitivity Analysis of Jhang System, each of Five Alternatives	415
9.45.1-5	Sensitivity Analysis of Gogera System, Each of Five Alternatives	420

250

LIST OF TABLES

Section	Title	Page
9.46.1-5	Sensitivity Analysis Depalpur System, Each of Five Alternatives	425
9.47.1-5	Sensitivity Analysis Mailsi System, Each of Five Alternatives	430
9.48.1-5	Sensitivity Analysis Nasir System, Each of Five Alternatives	435
9.49.1-5	Sensitivity Analysis Jamrao and Mithrao System, Each of Five Alternatives	440
9.50.1-5	Sensitivity Analysis Gotki System, Each of Five Alternatives	445
9.51.1-5	Sensitivity Analysis Rohri System, Each of Five Alternatives	450
9.52.1-5	Sensitivity Analysis Dadu System, Each of Five Alternatives	455
9.53.1-5	Sensitivity Analysis Kabul System, Each of Five Alternatives	460
9.54.1-5	Sensitivity Analysis Paharpur System, Each of Five Alternatives	465
9.55.1-5	Sensitivity Analysis Marwat System, Each of Five Alternatives	470
9.56.1-5	Sensitivity Analysis Upper Swat System, Each of Five Alternatives	475
9.57	Summary of Sensitivity Analysis for Individual Systems	480

LIST OF FIGURES

		Page
Punjab		
Fig.1.	Typical Cross-section for Metalling of Bank of Main Canal.	107
Fig.2.	Typical Cross-section for Metalling of Bank of Branch Canals.	107
Fig.3	Typical Cross-section for Metalling of Bank of Distributory / Minors.	108
Fig.4	Typical Cross-section for Metalling of Bank of Drain.	108
Fig.5	Typical Cross-section for Metalling of Other Links.	108
NWFP		
Fig.6.	Typical Cross-section for Metalling of Bank of Main Canal / Branch.	109
Fig.7.	Typical Cross-section for Metalling of Bank of Distributory / Minor.	109
Fig.8.	Typical Cross-section for Metalling of Other Links	109
S I N D		
Fig.9.	Typical Cross section for Metalling of Bank of Main Canal.	110
Fig.10.	Typical Cross-section for Metalling of Bank of Branch Canal	110
Fig.11.	Typical Cross-section for Metalling of Bank of Distributory / Minor.	111
Fig.12.	Typical Cross-section for Metalling of Bank of Drain.	111
Fig.13.	Typical Cross-section for Metalling of Links.	111

LIST OF APPENDICES

		Page
1.1	Principals of Consultants Team	1
1.2	Principal of Meetings of Consultants	2
4.1	Punjab System-wise, Plan-wise, Break-up of Proposed Roads.	9
4.2	Sind System-wise, Phase-wise, Break-up of Proposed Roads.	14
4.3	NWFP System-wise, Phase-wise, Break-up of Proposed Roads.	21
4.4	Jhang Branch - Description of Proposed Roads.	24
4.5	Gogera Branch - Description of Proposed Roads.	30
4.6	Depalpur Canal - Description of Proposed Roads.	36
4.7	Mailsi Canal - Description of Proposed Roads.	41
4.8	Nasir Canal - Description of Proposed Roads.	44
4.9	Jamrao Canal - Description of Proposed Roads.	49
4.9.1	Jamrao/Mithrao - Description of Proposed Roads.	49
4.9.2	Gotki Feeder - Description of Proposed Roads.	52
4.9.3	Rohri Canal - Description of Proposed Roads.	56
4.9.4	Dadu Canal - Description of Proposed Roads.	59
4.9.5	Kabul River Cannnal - Description of Proposed Roads.	61
4.9.6	Paharpur Canal - Description of Proposed Roads.	64

LIST OF APPENDICES

		Page
4.9.7	Marwat Canal - Description of Proposed Roads.	66
4.9.8	Upper-Swat Canal - Description of Proposed Roads	69
4.10	Summary - Engineering Estimate for Sind Drain Roads Outside the Study Areas.	79
5.1	Pavement Design	80
5.2	Specifications	84
5.3	Estimates for Foot Bridge	111
5.3A	Detail of Foot Bridge	115
5.4	Estimate for Semi Permanent Buffalo Ghat	121
5.5	Estimate for Permanent Buffalo Ghat	124
5.6	Detail of Buffalo Ghats	128
6.1	Cost Estimates Jhang Branch System Roads	138
7.1	Summary PID Equipment Inventory - Punjab, Sind, NWFP	168
2	Punjab PID Equipment Inventory	169
3	Sind PID Equipment Inventory	170
4	NWFP PID Equipment Inventory	171
5	Baluchistan PID Equipment Inventory	172
6	Punjab DOH - Summary Equipment Inventory and Condition Report	173
7	Sind DOH - Summary Equipment Inventory and Condition Report	174
8	NWFP DOH - Summary Equipment Inventory and Condition Report	175
9	Estimated Hourly Owning and Operating Costs (O&O)	176
9A	Tabulation of Estimated Hourly Owning and Operating Costs (O&O)	180

LIST OF APPENDICES

		Page
10	Calculation for Rental Rate Comparison	182
7.11	Typical Fleets - Estimated Production	183
	Typical Work Teams	184
	Production of Typical Earthmovers	185
12	Estimated Fleet Operating Costs	188,9
13	Parts and Shop Trailer - Layout	190
14	Parts and Shop Trailer - Detail	191
15	Sample of Equipment Owned by Contractors	192
8.1	Const. Equipment Capacity Available-Punjab	193
2	Const. Equipment Capacity Available-Sind	194
3	Const. Equipment Capacity Available-NWFP	195
4	Calculation of Volume to be Moved - by Provice	196
5	Mechanised Equipment Fleets Required - by Province	197
6	Equipment Requirement - Punjab	198
7	Equipment Requirement - Sind	199
8	Equipment Requirement - NWFP	200
9	Road Operating and Maintenance Equipment Requirement	201
9A	Consultants Estimate of Road Operating and Maintenance Cost - Bitumenous Surface	202
9B	Consultants Estimate of Road Operating and Maintenance Cost - Shingle Surface	203
9C	Consultants Estimate of Road Operating and Maintenance Cost - Waterbound Macadam Surface	204
9D	Road O&M - Surface Maintenance Calculations	205
10	CRP Equipment Requirement Summary	206
10A	CRP Equipment Requirement Summary - Reduced Budget - 35% Contractor Involvement	207

LIST OF APPENDICES

		Page
11	Estimate of Spare Parts Requirement	208
11A	Estimate of Spare Parts Requirement - Reduced Budget - 35% Contractor Involvement	209
8.12	Example of Component Exchange Plan	210
8.13	Provision for Financial Assistance to Contractors	211
9.	Economic Evaluation	212
9.1	Introduction	212
9.2	Methodology	212
9.2.1	Projection of Agriculture's Future	212
9.2.2	Impacted Area	214
9.2.3	Major Crops	216
9.2.4	Computers	216
9.3	Discounting	217
9.4	Financial and Economic Prices	217
9.5	Evaluative Measures	217
9.6	Direct Benefits	219
9.6.1	Increased Agricultural Production	219
9.6.2	Reduction of Off-Road Hauling Costs	224
9.6.3	Canal Rehabilitation and Road Construction	232
9.6.4	Savings in Vehicle Operating Costs	239
9.6.5	Time Savings	243
9.7	Indirect and Non-Quantifiable Benefits	245
9.8	Costs	246
9.9	Results of Economic Analysis	247
9.10	Sensitivity Analysis of Aggregated CRP	247

LIST OF APPENDICES

		Page
9.11	Sensitivity Analysis of Individual Systems	247
9.12	Financial Analysis and Capital Recovery	247
9.13	Summary and Conclusions	247

APPENDIX 1.1

PRINCIPALS OF CONSULTANTS TEAM

Company : Muhammad Ayoob, Abidi and Associates (Pvt) Ltd
Engineering Consultants & Architects
97 J, Model Town
Lahore, Pakistan

S. Muhammad Ayoob, Chairman, MAAA
S.M. Yousaf Abidi, Secretary, MAAA

Akhtar Ali Chohan, MAAA Team Leader
Munir A. Shaikh, R.E. Hyderabad (Sind)
Manzir H. Qureshi,R.E. Peshawar (NWFP)
Muhammad Hussain, A.R.E. Lahore (Punjab)
Muhammad Naeem A.R.E. Lahore
M.H. Rehman, Agric. Economist, Lahore

Expatriate Advisors on Behalf of :

Sheladia Associates Inc.
5711 Servis Avenue
Riverdale, Md.,
USA, 20737

Lee R. Broderick, P.Eng, SAI Team Leader
4235 Rockridge Rd.
West Vancover, B.C., Can., V7W 1A3

Dr. Robert M. Reeser, Ph. D, SAI Agric. Economist
2657 Westmount Blvd.
Columbus, Ohio, USA, 43221

APPENDIX 1.2

PRINCIPAL MEETINGS OF CONSULTANTS

1986

Dec.21 Robert Smail, Chief of Party, SAI., Islamabad.
Patrick J Hopkins Specialist, SAI, Islamabad.
L.R. Broderick, SAI, Team Leader
R.M. Reeser, SAI, Ag. Economist

22 M. I. Chishti, USAID, Lahore
Patrick J Hopkins Specialist, SAI, Islamabad.
L.R. Broderick, SAI, Team Leader
R.M. Reeser, SAI, Ag. Economist

22 Arz Mohammad Talpur C.E. Development, Hyderabad
Aftab D.G. Agriculture Extension, Hyderabad
M.A. Shaikh, MAAA, R.E., Hyderabad

23 Ghulam Kader Shaikh Dir.,Hiway.,Sind,Hyderabad
M.A. Shaikh, MAAA, R.E., Hyderabad

24 Qadar Buksh Memon C.E. Irrig., Kotri Barrage
M.A. Shaikh, MAAA, R.E., Hyderabad

24 Shamshir Khan Bhatti, Add'l. Secty. PID Lahore
M.A. Cheema, Dep. Secty. Development,PID Lahore
A.A. Chohan, MAAA, Team Leader
L.R. Broderick, SAI, Team Leader

25 Abddus Quddus, Exec. Engineer, PID, Kasur Div.
L.R. Broderick, SAI, Team Leader

27 Ali Gohar Shah,S.E.Rohri Canal Circle Hyderabad
Bashir Daher Exec.Eng.Irrig.Nasir Div.Hyderabad
M.A. Shaikh, MAAA, R.E., Hyderabad

28 A.K. Memon C.E. LBOD/OFWM & HQS WAPDA (south)
M.A. Shaikh, MAAA, R.E., Hyderabad

29 Richard Goldman, USAID, Islamabad
R.B. Backus, Proj. Officer, USAID, Islamabad
L.R. Broderick, SAI, Team Leader
R.M. Reeser, SAI, Ag. Economist

31 Nisar Ahmad Malik, Supt. Eng. PID, Kasur Div.
A.A. Chohan, MAAA, Team Leader
L.R. Broderick, SAI, Team Leader

1987

Jan. 1 S.N. Janjua, Project Engineer, NESPAK, Lahore
A.A. Chohan, MAAA, Team Leader
L.R. Broderick, SAI, Team Leader

5 A.A. Shaikh, C.E. Proov.,Co-oord., PID, Karachi
Muzammil Hussain Qureshi, Secty.,PID, Karachi
Saod Jaffar, Secretary, C&W, Karachi
Sajjad Haider, Chief Engineer, C&W, Karachi
M. Ayoob, MAAA, Chairman
M.I. Chishti, USAID, Lahore
M.A. Shaikh, MAAA, R.E. Hyderabad
L.R. Broderick, SAI, Team Leader
R.M. Reeser, SAI, Ag. Economist
M.H. Rehman, MAAA, Ag. Economist

5 Assistant Chief Economist,Min. of Ag.,Hyderabad
R.M. Reeser, SAI, Ag. Economist
M.H. Rehman, MAAA, Ag. Economist

6 Memon Qadir Bakhsh,C.E.Kotri Barrage,Hyderabad
S.Arif Ali, C.E. Highways (Sind),C&W,Hyderabad
Ghulam Qadir Shaikh,Dir.Hyws.Sind,C&W,Hyderabad
Mohsin Shaikh,G.M. (south), WAPDA, Hyderabad
Haqqi C.E. Administration, WAPDA, Hyderabad
Abdul Hamkim Memon C.E.Tech.WAPDA, Hyderabad
M. Ayoob, MAAA, Chairman
M.I. Chishti, USAID, Lahore
M.A. Shaikh, MAAA, R.E. Hyderabad
L.R. Broderick, SAI, Team Leader
R.M. Reeser, SAI, Ag. Economist
M.H. Rehman, MAAA, Ag. Economist

11 Richard Goldman, USAID, Islamabad
Russel B. Backus, Proj. Off. USAID, Islamabad
John Quay, USAID, Islamabad
Patrick J. Hopkins, Specialist,SAI, Islamabad
M.I. Chishti, USAID, Lahore
L.R. Broderick, SAI, Team Leader
R.M. Reeser, SAI, Ag. Economist

12 A. Majeed Mahmand, SEcretary, C&W, Peshawar
Amin Khattak, Secretary, PID, Peshawar
P.J. Hopkins, Specialist, SAI, Islamabad
M.H. Qureshi, MAAA, R.E. Peshawar
L.R. Broderick, SAI, Team Leader
R.M. Reeser, SAI, Ag. Economist
M.H. Rehman, MAAA, Ag.Economist

15 Aziz Ali Exec. C.E. Mech. Circle, C&W, Lahore
A. A. Chohan, MAAA, Team Leader
L.R. Broderick, SAI, Team Leader

Jan. 15 Harold Creed, Reg. Rep. PRC/Checchi Inc; Lahore
L.R. Broderick, SAI, Team Leader
R.M. Reeser, SAI, Ag. Economist

15 Economist, Deprt. of Highways, Lahore
A.A. Chohan, MAAA, Team Leader
Murtiza Ali Kandarim Deprt. of Highways, Lahore
R.M. Reeser, SAI, Ag. Economist

17 Jan Muhammad Qazi Exec. Eng. Rohri at Moro.
M.A. Shaikh, MAAA, R.E. Hyderabad

18 Qamaruddin Sahito,C.E.Irrg.,Gudu Barrage,PID,Sukkur
M.R.Vilaitrani,Sup.Eng.Ghotki Feeder Cir.PID,Sukkur
Pir A.Shah Sup.Eng.Desert Pat Feeder Cir.PID,Sukkur
Anwar Sial Ex. Eng., Dadu Northern Div. Dadu
M.A. Shaikh, MAAA, R.E. Hyderabad

28 Russel B. Backus, Proj. Off., USAID, Islamabad
M.I. Chishti, USAID, Lahore
P.J. Hopkins, Specialist, SAI, Islamabad
R.M. Resser, SAI, Ag. Economist

29 Richard Goldman, USAID, Islamabad in Lahore
L.R. Broderick, SAI, Team Leader

Feb. 4 Russell B. Backus, Proj. Off. USAID, Islamabad
M.I. Chishti, USAID, Lahore
P.J. Hopkins, Specialist, SAI, Islamabad
Alex Sundermann,Chief Engineer,USAID,Islamabad
L.R. Broderick, SAI, Team Leader

4 A. Shaikh Prov. Co-ord.,PID, Sind, Karachi
Zafar Shaikh Deputy Sec.Devel.PID,Sind, Karachi
M.A. Shaikh, MAAA, R.E. Hyderabad

8 S.N. Janjua G.M. ISR NESPAK, Lahore
Muhammad Ehsan R.E. ISR NESPAK, Lahore
A.A.Chohan MAAA, Team Leader

10 Muhammad Ehsan R.E. ISR NESPAK, Lahore
A.A.Chohan MAAA, Team Leader
Muhammad Hussain A.R.E. MAAA

10 P.J. Hopkins Specialist, SAI, Islamabad
M.I. Chishti, USAID, Lahore
A. Shaikh Prov. Co-ord. Sind, Karachi
Hassan Naqvi,Exe.Vice-President NESPAK, Karachi
M.A. Shaikh, MAAA, R.E. Hyderabad

11 M. Afzal Cheema Deputy Secy. Devel.PID, Lahore
A.A.Chohan MAAA, Team Leader
Muhammad Hussain A.R.E. MAAA

Feb. 16 Russel B.Backus Project Officer,USAID,Islamabad
M.I. Chishti USAID, Lahore
M.A. Shaikh, MAAA, R.E. Hyderabad

21 Patoli Director Tech.Highy Sind, Karachi
M.A. Shaikh, MAAA, R.E. Hyderabad

23 Russell B. Backus, Proj. Off. USAID, Islamabad
John Anania, OFWM Proj. Off. USAID, Islamabad
P.J. Hopkins, Specialist, SAI, Islamabad
M.I. Chishti, USAID, Lahore
L.R. Broderick, SAI, Team Leader

Mar. 3 S.H. Qureshi M.D. Soil TEsting Lab., Karachi
M.A. Shaikh, MAAA, R.E. Hyderabad

3 Khan S.M. Qayyum Khan, Tehsildar, Mailsi
M.H. Rehman, MAAA, Ag. Economist

4 Robert Smail, COP, SAI, Islamabad
MAAA Team Principals

8 A. Sial Exec.Eng.Dadu North.Div. PID, Dadu
M.A. Shaikh, MAAA, R.E. Hyderabad

11 Russell B. Backus, Proj. Off. USAID, Islamabad
P.J. Hopkins, Specialist, SAI, Islamabad
M.I. Chishti, USAID, Lahore
L.R. Broderick, SAI, Team Leader

11 G.R. Khokhar S.E. DOH, Faisalabad
Muhammad Yasin Xen DOH,Faisalabad
A.A.Chohan MAAA, Team Leader
Muhammad Hussain A.R.E. MAAA

12 Abdul Majid Nazim Xen DOH, T.T. Singh
Iftikhar Ahmad Siddiqui SDO, T.T. Singh
Muhammad Rafiq SDO, DOH, Kamalia
A.A. Chohan MAAA Team Leader

12 M.H. Qureshi, Secty.,PID,Sind, Karachi
S.A. Siddiqui Secty., C&W, Govt.of Sind,Karachi
B.Ahmad Depty.Secty.Tech.C&W,Govt.of Sind Karachi
Z.Shaikh Depty.Secty.Devel.PID,Sind,Karachi
M.A. Shaikh, MAAA, R.E. Hyderabad

12 M.H. Qureshi, Secty. PID, Sind
A. Shaikh, Procincial Co Ordinator, Sind
B.A. Khan, Depty. Secty Tech. C&W Sind
M. Ayoob, Chairman, MAAA
P.J. Hopkins Specialist, SAI, Islamabad
L.R. Broderick,SAI, Team Leader

Mar. 13 Nazar Muhammad, Secty. PID, Punjab
M.A.Cheema Dpty.Secty. Plag. PID, Punjab
S.A. Bhatti, Add'l., Secty., PID, Punjab
A. Chohan C.E. Irrigation, Lahore Dist.
Abdus Salam, Secty. C&W, Punjab
Mir A. Akhtar, Add'l. Secty., C&W, Punnjab
A.A. Chohan, MAAA, Team Leader
L.R. Broderick, SAI, Team Leader

14 Almani Exec. Eng. Mithrao Irrg. Div. Mirpurkhas
Maher Exec. Eng. Jamrao Irrg. Div. Mirpurkhas
A.Bhatti,S.E.Nara Circle, Camp Mirpurkhas
M.A. Shaikh, MAAA, R.E. Hyderabad

14 Ghulam Haider,Dpty.Dir.D.G.Ag.Ext.Hyderabad
M.H. Rehman, MAAA, Ag. Economist

14 Ch. Nazir Ahmad,Depty.Dir.L.B.O.D., Hyderabad
M.H. Rehman, MAAA, Ag. Economist

15 A.A. Qureshi,Dir.Gen.Ag.Ext.Sind,Hyderabad
M.H. Rehman, MAAA, Ag. Economist

16 Gopind Ram H. Rajput, Mukhlarakar, Matli
M.H. Rehman, MAAA, Ag. Economist

16 A.Rehman Abbasi,Dev.Officer Local Gov't,Malti
M.H. Rehman, MAAA, Ag. Economist

17 Thanwar Das Nanwani, Mukhtarkar
M.H. Rehman, MAAA, Ag. Economist

17 M.A. Rehmani C.E. PID, Multan
Kh.Saleem-ud-din S.E.PID,Depalpur Circle,Multan
A.A. Chohan MAAA Team Leader
Muhammad Naeem A.R.E. MAAA

18 Sardar Muhammad S.E. DOH, Multan
Bashir Ahmad Xen DOH, Multan
A.A. Chohan MAAA Team Leader

18 Abdul Qadir M. Insari, Mukhtarkar, Digri
M.H. Rehman, MAAA, Ag. Economist

18 Taj Muhammad Laghari,Asst.Eng.PID,Kot.G.Mohal
M.H. Rehman, MAAA, Ag. Economist

19 Wahid Bur Mehr, Mukhtarkar, Samaro
M.H. Rehman, MAAA, Ag. Economist

20 Qamaruddin Sahito C.E.,Guddu Barrage, Sukkur
M.R.Vilaitrani S.E.,Ghotki Feeder System Sukkur
I.A. Shah C.E., Sukkur Barrage, Sukkur
M.A. Shaikh, MAAA, R.E., Hyderabad

Mar.21 Fred Schantz,Equip.Mgmt.Adv.PRC/Checchi,Lahore
L.R. Broderick, SAI, Team Leader

25 Haji Q.B. Memon C.E.Kotri Barrage, Hyderabad
M.A. Shaikh, MAAA, R.E.,Hyderabad

26 G.Q. Shaikh Dir. Highways Sind at Hyderabad
M.A. Shaikh, MAAA, R.E.,Hyderabad

28 Fred Schantz,Equip.Mgmt.Adv.PRC/Checchi,Lahore
L.R. Broderick, SAI, Team Leader

Apr. 1 Fayyaz Ahmad Maghiana, XEN, DOH, Kasur
Asghar Mahmood, SDO, PID, Kasur
A.A. Chohan, MAAA, Team Leader
L.R. Broderick, SAI, Team Leader

1 I.A. Zaidi S.E.,Mechnical Circle, Hyderabad
M.A. Shaikh, MAAA, R.E. Hyderabad

2 A.A. Khan Dir. Gen. Ag.Ext.Sind, Hyderabad
M.A. Shaikh, MAAA, R.E. Hyderabad

4 Sirajul Haq Qureshi,M.D.Soil Lab. Karachi
M.A. Shaikh, MAAA, R.E. Hyderabad

5 & 6 Mohsin Shaikh, G.M..WAPDA,(south) Hyderabad
A.H. Memon C.E.,H.Q., WAPDA, Hyderabad
Haji Memon Q.Buksh C.E.Irrg.Kotri Bar.Hyderabad
Haji Hashim Memon C.E.Irrg.Sukkur(Rtd) and
member Public Serv. Comission,Sind Hyderabad
A.A. Khan Dir. Gen. Agric. Ext.Sind Hyderabad
M.A. Shaikh, MAAA, R.E. Hyderabad

7 Abdul Jalil, C.E. PID, NWFP
A.A.Ismaili,S.E.Central Irrigation Circle, NWFP
Hazrat Sultan,S.E. DOH, NWFP
Munzir H. Qureshi, R.E. MAAA, Peshawar
P.J. Hopkins, Contracts Specil. SAI, Islamabad
L.R. Broderick, SAI, Team Leader

11 Agha Mir A.Khan S.E.Highways,Circle No.II,
Hyderabad and Machinery Div.& Road Research
Laboratory
M.A. Shaikh, MAAA, R.E. Hyderabad

12 Taj Mohammad, Agricultural Officer, Digri
M.H. Rehman, MAAA. Ag. Economist

12 Faiz Mohammad Panwar,S.E.Circle
No.1 Hyderabad for Tharpharker,Badin & Tando
Muhammad Khan

Apr.13 Zahirul Haq, Agricultural Office, Jamsabad

M.H. Rehman, MAAA. Ag. Economist

13 M.H. Qureshi Secty. PID, Sind, Karachi
M.A. Shaikh, MAAA, R.E. Hyderabad

14 N. Abbasi, C.E. Highways, Sind, Hyderabad
M.A. Shaikh, MAAA, R.E. Hyderabad
M.A. Shaikh, MAAA, R.E. Hyderabad

16 Dr.A.K.Ansari Vice Chancl.Ag.University,, Sind
M.A. Shaikh, MAAA, R.E. Hyderabad

30 Muzammil H. Qureshi,Proj.Off.,USAID,Islamabad
A.A. Chohan, MAAA, Team Leader
L.R. Broderick, SAI, Team Leader

May 3 Sohail Anwar,Sls.Mgr. Allied Engineering,Lahore
L.R. Broderick,SAI,, Team Leader

4 Russel Backus, Proj.Off.,USAID,Islamabad
Muzammil Qureshi,Proj.Off.,USAID, Islamabad
P.J. Hopkins, Contracts Spec., SAI, Islamabad
A.A. Chohan, MAAA, Team Leader
L.R. Broderick, SAI, Team Leader

265

APPENDIX 4.1

PUNJAB

JHANG BRANCH SYSTEM PHASE WISE BREAK UP OF PROPOSED ROADS.

No.	DESCRIPTION	LENGTH IN MILES	PHASE I	PHASE II	BALANCE	DRAINS	OTHER LINKS
2.1	Road along Jhang Branch RD 160460 to 308426	28.00	28.00	--	--	--	--
2.2	Road along Jhang Branch RD 187000 to 189300= 0.44 along khewra Dy. RD 0 t0 RD 30000 = 5.68 Miles.	6.12	6.12	--	--	--	--
2.3	Road along Bhangu Branch RD 8936 to 75635	12.63	--	--	12.63	--	--
2.4	Road along Dhaular Dy. RD 0 to 29987 = 5.68 Miles. Road along Darsana Dy. RD 0 to 39241 = 7.43 Miles.	13.11	5.68	7.43	--	--	--
2.5	Road along Nasrana Dy. RD 0 to 85500	16.19	16.19	--	--	--	--
2.6	Road along Dhaular Dy. RD 131255 to 170877	7.50	7.50	--	--	--	--
2.7	Road along Bhowana Br. RD 28975 to 37478 = 1.61 & along Feeder Dy. RD 37478 to 87765 = 9.53 Mi. & along Maghani Dy. RD 0 to 9600 = 1.82 Miles.	12.96	1.61	--	11.35	--	--
2.8	Road along Dhaular Dy. RD 187800 to 209000 = 4.02 Mi.& along Qaim Mr RD 0 to 25450 = 4.82 Miles.	8.84	4.02	--	4.82	--	--
2.9	Road along Khewra Dy. RD 56800 to 121200 = 12.20 & Link 0.31 Miles.	12.51	12.20	--	--	--	0.31
2.10	Road along Marh Chiniot Drain RD 84910 to 162820	14.76	--	--	--	14.76	--
		132.62	81.32	7.43	28.80	14.76	0.31

266

APPENDIX 4.1 cont'd.

PUNJAB

GOGERA BRANCH SYSTEM PHASE WISE BREAK UP OF PROPOSED ROADS.

NO.	DESCRIPTION	LENGTH IN MILES	PHASE I	PHASE II	BALANCE	DRAINS	OTHER LINKS
3.1	Road along Lower Gogera Br. RD 148000 to 218000	13.25	--	13.25	--	--	--
3.2	Road along Tandliawala Dy. RD 0 to 11455 = 2.17 miles & along Bahlak Branch RD 0 to 12065 = 2.29 miles	4.46	1	--	3.46	--	--
3.3	Road along Burala Branch RD 164000 to 205000	7.77		7.77	--	--	--
3.4	Road along Tarhhani Dy. RD 9013 to 39147 = 5.71 mi. & along Sarwali Minor RD 0 to 16241 = 3.10 mile	8.81	3.21	2.50	3.10	--	--
3.5	Road along Mungi Dy. RD 12657 to 62774	9.49	--	--	9.49	--	--
3.6	Road along Madoana Branch Drain RD 103543 to 200871	17.49	--	--	--	17.49	--
3.7	Road along Kabirwala Dy. RD 33283 to 67448 = 6.47 & along Hotar Mr RD 0 to 10500 = 1.98	8.45	--	6.47	1.98	--	--
3.8	Road along Pirmahal Dy. RD 144902 to 156082 = 2.12 & Link 2.24 Miles.	4.36	--	--	2.12	--	2.24
3.9	Road along Samundri Main Drain. RD 4810 to 39670	6.60	--	--	--	6.60	--
3.10	Road along Burala Branch RD 410250 to 442792	6.16	--	6.16	--	--	--
		86.84	4.21	36.15	20.15	24.09	2.24

APPENDIX 4.1 cont'd.

PUNJAB

DEPALPUR BRANCH SYSTEM PHASE WISE BREAK UP OF PROPOSED ROADS.

No.	DESCRIPTION	LENGTH IN MILES	PHASE I	PHASE II	BALANCE	DRAINS	OTHER LINKS
4.1	Road along :-						
	i) Link Channel Rd 18500 to 25974 =1.42 Mi	42.37	--	10	32.37	--	--
	ii) Depalpur Canal RD 19000 to 235236 =40.95 Mile						
4.2	Road along Balloki Sulemanki Link. RD 86000 to 262000	33.33	--	--	33.33	--	--
4.3	Road along :-						
	i) Attari Disty. RD 0 to 128990 =24.43 Mile	25.25	--	24.43	--	--	0.82
	ii) Link 0.82 Mile						
4.4	Road along :-						
	i) Chorkot Disty. RD 0 to 144908 27.44 Mi.	29.73	--	--	27.44	--	2.29
	ii) Link = 2.29						
4.5	Road along :-						
	i) Pakhoki Disty. Rd 81815 to 113500 = 6 Mile	7.00	--	6.00	--	--	1.00
	ii) Link 1.00 Mile.						
4.6	Road along Bunga Hayat Dy. RD 0 to 80200 = 15.19 Mi.	15.19	15.19	--	--	--	--
4.7	Road along						
	i) Shahamad Disty. RD 7250 to 9750 = 0.47 Mile	25.44	--	--	24.50	--	0.94

APPENDIX 4.1 cont'd.

PUNJAB

DEPALPUR BRANCH SYSTEM PHASE WISE BREAK UP OF PROPOSED ROADS.

No.	DESCRIPTION	LENGTH IN MILES	PHASE I	PHASE II	BALANCE	DRAINS	OTHER LINKS
	ii) Mehtabgrah Disty. RD 0 to 65000 = 12.31 Mile						
	iii) Link = 0.94 Miles						
	iv) Pakpatten Canal RD 24000 to 85900 = 11.72 Mi.						
4.8.	Road along :-						
	i) Nehrannwala Dy. RD 0 to 14156 = 2.68 Mile	17.47	--	--	16.98	--	0.49
	ii) Along Mustafabad Minor RD 0 to 75495 = 14.30 Miles						
	iii) Link = 0.49 Mile						
4.9.	Road along :-						
	i) Kanganpur Dy. RD 0 to 94000 = 17.80 Mi.	18.90	--	--	17.80	--	1.10
	ii) Link = 1.10 Mile						
4.10.	Road along Depalpur Disty. RD 0 to 57880 = 10.96 Mile	10.96	--	--	10.96	--	--
	Total :	225.64	15.19	40.43	163.38	--	6.64

269

APPENDIX 4.1 cont'd.

PUNJAB

MAILSI BRANCH SYSTEM PHASE WISE BREAK UP OF PROPOSED ROADS.

NO.	DESCRIPTION	LENGTH IN MILES	PHASE I	PHASE II	BALANCE	DRAINS	OTHER LINKS
5.1	Road along :-						
	i) Mailsi Canal RD 160241 to 219550 = 11.23 miles	61.09	33.68	2.65	24.76	--	--
	ii) Chit Dain Branch RD 0 to 94840 = 17.96 miles						
	iii) Bahisti Disty. RD 0 to 139859 = 26.49						
	iv) Patti Mr RD 0 to 28565 = 5.41						
5.2	Road along Gopal Disty. RD 0 to 114854	21.75	--	--	21.75	--	--
5.3	Road along :-						
	i) Mailsi Canal RD 80000 to 133592 = 10.15 Miles	29.40	--	--	27.10	--	2.30
	ii) Hari Disty. Rd o to 89500 = 16.95 Miles & Link = 2.30 Miles						
5.4	Road Suiwala to Bahisti Dy. along Katcha track.	18.50	--	--	--	--	18.5
5.5	Road along Mahmood Disty. RD 60000 to 163050 = 19.52 & Link = 0.50	20.02	--	--	19.52	--	0.50
		150.76	33.68	2.65	93.13	--	21.30

270

APPENDIX 4.2

SIND

Nasir Canal System Phase-wise Breakup of Proposed Roads

NO.	DESCRIPTION	LENGTH IN MILES	PHASE I	PHASE II	BALANCE	DRAINS	OTHER LINKS
6.1	Road along Nasir Br. RD 278000 to 354000 = 14.39 Miles Link = 3.00 Miles	17.39	--	14.39	--	--	3.00
6.2	Road along Bhuro Mr. RD 0 to 33 400	6.33	--	6.33	--	--	--
6.3	Link to Ailpur Mr.	2.00	--	--	--	--	2.00
6.4	Road along Khoski Dy. RD 0 to 23	4.36	--	--	4.36	--	--
6.5	Road along Ailpur Mr. RD 0 to 28,400.	5.38	--	5.38	--	--	--
	Total	35.46	--	26.1	4.36	--	5.00

271

APPENDIX 4.2 cont'd.

SIND

Jamrao Canal System Phase-wise Breakup of Proposed Roads

NO.	DESCRIPTION	LENGTH IN MILES	PHASE I	PHASE II	BALANCE	DRAINS	OTHER LINKS
7.1	Road along Dalore Dy. RD 500 to 53000	9.94	--	9.94	--	--	--
7.2	Road along Patoyoon Dy. RD 31500 to 77000	8.60	--	8.60	--	--	--
7.3	Link to Patoyoon Dy.	5.00	--	--	--	--	5.00
7.4	Road along Jamrao Canal RD 0 to 85000	16.01	--	16.01	--	--	--
7.5	Road along Jamrao Canal RD 85000 to 120000	6.63	6.63	--	--	--	--
7.6	Road along Jamrao Canal RD 201500 to 241500	7.58	7.58	--	--	--	--
	Total	53.76	14.21	34.55	--	--	5.00

272

APPENDIX 4.2 cont'd.

SIND

Jamrao Canal System Phase-wise Breakup of Proposed Roads

NO.	DESCRIPTION	LENGTH IN MILES	PHASE I	PHASE II	BALANCE	DRAINS	OTHER LINKS
	Mithrao Canal						
8.1	Road along Mithrao Canal RD 169000 to 252000	15.72	--	15.72	--	--	--
8.2	Road along Mithrao Canal RD 252000 to 315000	11.93	--	11.93	--	--	--
8.3	Road along Mithrao Canal RD 31500 to 358000	8.14	--	8.14	--	--	--
8.4	Road along Mithrao Canal RD 358000 to 418500	11.46	--	11.46	--	--	--
8.5	Road along Naukot Br. RD 0 to RD 106500	20.17	--	20.17	--	--	--
	Jamrao Canal						
8.6	Road along Puran Dy. RD 0 to 25000	4.73	--	4.73	--	--	--
8.7	Road along Jamrao Canal RD 375000 to 445000	13.26	--	--	13.26	--	--
8.8	Road along Puran Dy. RD 25000 to RD 50000	4.73	--	4.73	--	--	--
8.9	Road along Jamrao Canal RD 502000 to 620000	22.35	22.35	--	--	--	--
8.10	Road along Puran Dy. RD 50000 to RD 144000	17.80	--	17.80	--	--	--
	Total	130.29	22.35	94.68	13.26	--	--

273

APPENDIX 4.2 cont'd.

SIND

Ghotki Feeder System Phase-wise Breakup of Proposed Roads

NO.	DESCRIPTION	LENGTH IN MILES	PHASE I	PHASE II	BALANCE	DRAINS	OTHER LINKS
9.1	Road along Mahi Wah Br. RD 47000 to 91500	8.43	--	8.43	--	--	--
9.2	Road along Masu Wah Br. RD 2700 to 56000	10.10	--	10.10	--	--	--
9.3	Road along Masu Wah Br. RD 62000 to 107000	8.52	--	8.52	--	--	--
9.4	Road along Dingro Wah RD 45000 to 106000	11.55	--	11.55	--	--	--
9.5	Road along Mahesro Wah RD 38000 to 94000	10.61	--	10.61	--	--	--
9.6	Link Mahesro Wah Road	4.73	--	--	--	--	4.73
9.7	Road along Bumbli Mr. RD 0 to 148200	28.07	--	--	28.07	--	--
9.8	Road along Ghotki Feeder RD 127000 to 249000	23.10	--	--	23.10	--	--
9.9	Road along Bundh Mr. RD 30000 to 49000 = 3.60 Mi.	5.60	--	--	3.60	--	2.00
	Link = 2.00 Mi.						
9.10	Link Bumbli Mr. to Sangrar RD 0 to 15900	3.00	--	--	--	--	3.00
9.11	Road along Bakro Mr. RD 0 to 14000 = 2.65 Mile	3.65	--	--	2.65	--	1.00
	Link = 1.00 Mile						

274

APPENDIX 4.2 cont'd.

SIND

Ghotki Feeder System Phase-wise Breakup of Proposed Roads

NO.	DESCRIPTION	LENGTH IN MILES	PHASE I	PHASE II	BALANCE	DRAINS	OTHER LINKS
9.12	Road along Masu Wah Br. RD 107000 to 131000	4.55	--	4.55	--	--	--
9.13	Road along Kazi Wah Br. RD 92000 to 166000	14.02	--	--	14.02	--	--
9.14	Road along Korai Minor RD 2000 to 17000	2.84	--	--	2.84	--	--
	Total	138.77	--	53.76	74.28	--	10.73

275

APPENDIX 4.2 cont'd.

SIND

Rohri Canal System Phase-wise Breakup of Proposed Roads

NO.	DESCRIPTION	LENGTH IN MILES	PHASE I	PHASE II	BALANCE	DRAINS	OTHER LINKS
10.1	Road along Bhogri Mr. RD 0 to 19400	3.67	--	3.67	--	--	--
10.2	Link to Bhogri Mr.	3.00	--	--	--	--	3.00
10.3	Road along Nauabad Dy. RD 15000 to 66000 = 9.66 Mile Link = 3.00	12.66	--	6.44	3.22	--	3.00
10.4	Road along Bhiria Mr. RD 0 to 17200	3.26	--	3.26	--	--	--
10.5	Road along Khahi Qasim Mr. RD 0 to 24000	4.55	--	4.55	--	--	--
10.6	Road along Sangi Dy. RD 40000 to 75000	6.63	--	6.63	--	--	--
10.7	Road along Sangi Dy. RD 75000 to 110000	6.63	--	6.63	--	--	--
10.8	Road along Jamal Shah Dy. RD 3000 to 23000 = 3.79 Miles & RD 63000 to 73000 = 1.89 Miles	5.68	--	5.68	--	--	--
10.9	Road along Jaskani Dy. RD 27000 to 77000	9.47	--	9.47	--	--	--
10.10	Road along Thul Br. RD 0 to 34000	6.44	--	--	6.44	--	--
	Total	61.99	--	46.33	9.66	--	6.00

276

APPENDIX 4.2 cont'd.

SIND

Dadu Canal System Phase-wise Breakup of Proposed Roads

NO.	DESCRIPTION	LENGTH IN MILES	PHASE I	PHASE II	BALANCE	DRAINS	OTHER LINKS
11.1	Road along Piarogoth Dy. RD 57000 to 95000	7.20	--	7.20	--	--	--
11.2	Road along Kakar Dy. RD 0 to 34000	6.44	--	6.44	--	--	--
11.3	Road along Pahore RD 0 to 40000 = 7.58 M Link = 0.50 M	8.08	--	7.58	--	--	0.50
11.4	Road along Lakha disty RD 8000 to 45700	7.14	--	7.14	--	--	--
11.5	Road along MNV drain RD 297000 to 342000	8.52	--	--	--	8.52	--
11.6	Link to Phulji RD 0 to 21500	4.07	--	--	--	--	4.07
11.7	Road along Dadu Canal RD 484000 to 607000	23.29	--	23.29	--	--	--
	Total	64.74	--	51.65	--	8.52	4.57

277

APPENDIX 4.3

NWFP

Kabul River Canal System Phase-wise Breakup of Proposed Roads

NO.	DESCRIPTION	LENGTH IN MILES	PHASE I	PHASE II	BALANCE	DRAINS	OTHER LINKS
12.1	Road along Wazir Garhi Mr. RD 0 to 15750	2.98	--	--	2.98	--	--
12.2	Road along Kabul River Canal RD 112000 to 133350	4.04	--	--	4.04	--	--
12.2A	Road along Kabul River Canal RD165000 to 191400	5.00	--	--	5.00		
12.3	Road along Warsek Gravity Canal RD 147000 to 184626	7.13	--	2.84	4.29	--	--
	Total	19.15		2.84	16.31	--	--

NWFP

Paharpur Canal System Phase-wise Breakup of Proposed Roads

NO.	DESCRIPTION	LENGTH IN MILES	PHASE I	PHASE II	BALANCE	DRAINS	OTHER LINKS
13.1	Road along Pharpur Canal RD 20000 to 129000	20.64	--	--	20.64	--	--
13.2	Road along Pharpur Canal RD 198000 to 256000	10.98	--	--	10.98	--	--
	Total	31.62	--	--	31.62	--	--

278

APPENDIX 4.3 cont'd.

NWFP

Marwat Canal System Phase-wise Breakup of Proposed Roads

NO.	DESCRIPTION	LENGTH IN MILES	PHASE I	PHASE II	BALANCE	DRAINS	OTHER LINKS
14.1	Road along Kheru Khel Dy. RD 0 to 66900	12.67	--	12.67	--	--	--
14.2	Road along Saradarga Dy. RD 0 to 21500	4.07	--	4.07	--	--	--
14.3	Road along Khan Khel Mandazai Minor RD 0 to 45750	8.66	--	--	8.66	--	--
14.4	Road along Narmi Khel Mr. RD 0 to 14000	2.65	--	--	2.65	--	--
	Total	28.05	--	16.74	11.31	--	--

NWFP

Upper Swat Canal System Phase-wise Breakup of Proposed Roads

NO.	DESCRIPTION	LENGTH IN MILES	PHASE I	PHASE II	BALANCE	DRAINS	OTHER LINKS
15.1	Road along Pir Saddo Dy. RD 0 to 4500 = 0.85 Miles & RD 15000 to 32600 = 3.34 Miles	4.19	--	2.42	1.77	--	--
15.2	Road along :- i) Machai Br. RD 66000 to 79200 = 2.50 ii) Patrol road detour = 0.51 iii) Machai Br. RD 91800 to 213100 = 22.97	25.98	--	12.50	13.48	--	--

279

APPENDIX 4.3 cont'd.

15.3 Road along Saidabad Dy. RD 23800 to 52412	5.42	--	5.42	--	--	--
15.4 Road along :- i) Pehur Br. RD 0 to 6700 = 1.27 & RD 24000 to 35500 = 2.18 ii) Khaddi Minor RD 0 to 4700 = 0.89	4.34	--	--	4.34	--	--
15.5 Road along :- i) Dagi Dy. RD 0 to 10600 = 2.00 ii) Dagi Minor RD 0 to 22000 = 4.17	6.17	--	--	6.17	--	--
15.6 Road along Kalu Khar Dy. RD 0 to 16096	3.05	--	3.05	--	--	--
15.7 Road along Daulkat Mr. RD o to 27250	5.16	--	--	5.16	--	--
15.8 Road along Maira Br. RD 62000 to 145750	15.86	--	0.53	15.33	--	--
15.9 Road along Chowky Dy. RD 0 to 20400	3.86	--	0.47	3.39	--	--
15.10 Road along Chowky Mr. No.2 RD 0 to 6000 = 1.14 & Link = 1.00	2.14	--	--	1.14	--	1.00
15.11 Road along Toru RD 0 to 15000	2.84	--	--	2.84	--	--
15.12 Road along Indus Br. RD 130000 to 135200	0.98	--	0.98	--	--	--
15.13 Road along Jhangira Mr. RD 0 to 15250	2.89	--	--	2.89	--	--
Total	82.88	--	25.37	56.51	--	1.00

280

APPENDIX 4.4

JHANG BRANCH SYSTEM

Road No. 2.1

The proposed road is planned along Jhang Branch from RD 160460 to 308426 with a total length of 28 miles. On one side it will be connected with Salarwala - Chiniot road and on the other side with Faisalabad - Bhowana road. The area on both sides of the proposed road is very productive in agriculture but adequate means of communications do not exist. The proposed road will open up the area and facilitate movement of agriculture inputs to the farmers and agriculture produce to the mandi towns. This road will also link six metalled roads and thus has a strong justification. Village road bridges, District road and Arterial road bridges and foot bridges are sufficient in number and as such no provision for new bridges has been made.

Road No. 2.2

The proposed road is planned partly along Jhang Branch from RD 187000 to RD 189300 and partly along Khewra distributory from RD 0 to RD 30000 with a total length of 6.25 miles. On one side it will be connected with T.T. Singh - Gojra road through a small link of a Sugar Cess road under construction and on the other side with Jhang - T.T. Singh road through an existing Farm to

Market road. The area on both sides of the proposed road is very rich in agriculture produce but lacks suitable means of communication. The proposed road will be a big boon to the inhabitants of the area and will greatly improve their socio-economic conditions. Two foot bridges at RD 12500 and RD 17000 will be needed. A village road bridge is also needed at RD 23000. Provisions for these bridges has been made in the project estimates.

Road No. 2.3

The proposed road is planned along Bhangu Branch from RD 8936 to RD 75635 with a total length of 12.63 miles. On one side it will be connected with Jhang - Toba Tek Singh road and on the other side to Toba Tek Singh - Waryamwala road. The area to be served by the road is very fertile and major cash crops are wheat, sugar cane, cotton and fruits. The road will open up the area and provide easy transportation means to the farmers.

Five foot bridges are needed for which provision has been made in the project estimates.

Road No. 2.4

The proposed road is planned partly along Dhaular Dy RD 0 to 29987 and partly along Darsana Dy Rd 0 to 39241 with a total length of 13.11 miles. On one side it will be connected with an approved road under ADB Scheme from

282

Doakhari to Nawan Lahore and on the other side with Gojra - Jhang metalled road. The area on both sides of the proposed road is very productive and thicky populated. The construction of this road will benefit the people living in a large number of villages. This road will also link the metalled road Pancera to Bhawana.

Foot bridges and buffalo ghats where necessary have been provided in the Project estimates.

Road No. 2.5

This road has been proposed along Nasrana Dy from RD 0 to RD 85500 with a length of 16.19 miles. It will connect on one side the proposed road along Jhang Branch and on the other side to Faisalabad - Jhang road at Tekhriwala. The area on both sides of the proposed road is rich in agriculture produce. i.e. wheat, sugar cane and cotton are the major crops. This road will link 5 metalled roads and as such has a strong justification.

Foot bridges and buffalo ghats are also needed for which provision has been made in the project estimates.

Road No. 2.6

The proposed road has been planned along Dhaular Dy from RD 131255 to RD 170877 with a length of 7.50 miles. On one side it will be connected with Jhang - T.T. Singh

road and on the other side with an existing Sugar Cess road. The area on both sides of the road is very productive, but lacks in suitable means of communications. The proposed road will enable the farmers to bring in badly needed agricultural inputs and carry their produce to the markets.

Three foot bridges at RDs 140250, 161200, 168500 and five buffalo ghats at RDs 142000, 156500, 162250, 167000 and 168800 are needed and provision for the same has been made in the project estimates.

Road No. 2.7

The proposed road is planned along Bhowana Branch RD 28975 to 37478 and along Feeder Dy. RD 37478 to 87765 and along Maghani Dy. RD 0 to 9600. The total length of the road is 11.35 miles. On one side it will connect Faisalabad - Bhowana road, and on the other side Mochiwala - Bhowana road.

The proposed road will be a big boon to the inhabitants of the area and will greatly improve their socio-economic conditions. This road will also link Pancera - Bhowana metalled road.

Foot bridges and buffalo ghats are also needed for which provision has been made in the project estimates.

Road No. 2.8

The proposed road has been planned partly along Dhaular Dy. from RD 187800 to 209000 and partly along Qaim Mr. from RD 0 to RD 25450 with a total length of 8.84 miles. On one side it connects Rustam Sargana - Jhang metalled road and on the other side Waryamwala - Qaim Bharwana road. The area on both sides of the proposed road is fertile and has major crops of wheat, sugar cane, cotton etc. This road will open up the area. Three foot bridges at RD 191000, 198300 and 208000 and 4 buffalo ghats at RD 198500, 205000, 10450 and 15500 Qaim Mr are needed for which provision has been made in the project estimates.

Road No. 2.9

The proposed road will take off from Jhang - T.T. Singh road along Khewra distributory from RD 56000 to RD 121200. It will then connect T.T. Singh - Nazir Shaheed road in mile 10 through 1/2 mile link along the existing katcha track. The total length of the road will be 12.85 miles. The area along both sides of the distributory is very fertile with cash crops of wheat and sugar cane. A large number of fruit orchards also exist on both sides. At present there are no means of communication and the proposed road will boost socio-economic conditions of the people living in a large number of Chaks along the distributory. The road will also link four existing

285

metalled roads and thus has a strong justification. At present even foot bridges are not available and the local inhabitants have erected improvised foot bridges by putting across trunks of trees. Apart from foot bridges, some road bridges and buffalo ghats are also needed for which provision in the project estimates has been made.

Road No. 2.10

The proposed road has been planned along Marh Chiniot Drain from RD 84910 to RD 162820 with a total length of 14.76 miles. On one side it will connect Faisalabad - Sangla road and on the other end Salarwala - Chiniot road. The area on both sides of the drain is canal irrigated and major crops are wheat, sugar cane and cotton. The proposed road will go a long way in improving the socio-economic conditions of the people living in a large number of villages around. The road will also connect two existing metalled roads and many katcha roads.

286

APPENDIX - 4.5

GOGERA BRANCH SYSTEM

Road No. 3.1

The road has been proposed along lower Gogera Branch from RD 148000 to 218000 with a total length of 13.25 miles. On one side it is connected with Faisalabad - Tandlianwala road and on the other end to Faisalabad - Summundri road. The area on both sides of the proposed road is rich in agriculture produce but existing means of communications are not adequate for the commodities. The construction of this road will greatly help the farmers for transportation of agricultural inputs as well as their produce.

Road No. 3.2

The proposed road has been planned partly along Tandlianwala Disty from RD 0 to RD 11455 and partly along Bahlak Branch from RD 0 to RD 12065 with a total length of 4.46 miles. On one side it connects to proposed road No. 3.3 and on the other side to Satiana Jhamra road. The Satiana Jhamra road. The area on both sides of the road is very fertile, but lacks suitable means of communications. The construction of this road will certainly boost the economy of the people living in the villlages.

Foot bridges and buffalo ghats are also needed and provision for the same has been made in the project estimates.

Road No. 3.3

The road has been proposed along Burala Br. from RD 164000 to RD 205000 with a length of 7.77 miles. On one side this road is connected with Faisalabad - Tandlianwala road and on the other side with the proposed road No. 3.2. The area on both sides of the proposed road is very rich in agricultureal produce and requires suitable means of communications. Major crops of the area are wheat, sugar cane and cotton etc.

Foot bridge is needed at RD 186000 between Tiwana Chak and Kutrowal village. A manned level crossing is also needed at RD 172120. Provision for these has been made in the project estimates.

Road No. 3.4

The proposed road is planned partly along Tarkhani Disty from RD 9013 to RD 39147 and partly along Sarwali Minor from RD 0 to RD 16241 with a total length of 8.81 miles. The road will connect on one side with Samundri - Gogra road and on the other side with Gojra - Khiddar road. The area on both sides of the road is very fertile, but lacks in adequate means of transportation. The road will

288

facilitate easy and cheaper transportation of agriculture inputs and farm produce.

Foot bridges and buffalo ghats are needed and provision for the same has been made in the project estimates.

Road NO. 3.5

The road has been proposed along Mungi Dy from RD 12657 to RD 62774 with a length of 9.49 miles. On one side it will be connected with Gojra - Khiddar road and on the other side with Janiwala - Muridwala road. The area on both sides of the road is very fertile and major crops are wheat, sugar cane, cotton etc. A large number of fruit orchards also exist. The construction of the road will greatly improve the socio-economic conditions of the inhabitants of a large number of villages.

Foot bridges and buffalo ghats have also been provided for in the project estimates where necessary.

Road No. 3.6

The proposed road has been planned along Maddoana Br. Drain from RD 108543 to RD 200871 with a length of 17.49 miles. It will be connected on one side to Faisalabad - Sheikhupura - Lahore road and on the other side to Faisalabad - Tandianwala road. This road will also link Faisalabad - Jaranwala - Lahore road. The area on both sides of the drain is fertile but lacks in adequate means of communications. The construction of the

proposed road will improve the socio-economic conditions of the inhabitants of a large number of villages in the area. The road will also act as a bye-pass for Lahore - Sheikhupura - Faisalabad road, Lahore Jaranwala - Faisalabad road and Faisalabad - Satiana - Tandlianwala road. The road is thus fully justified.

Road NO. 3.7

The proposed road has been planned partly along Kabirwala Dy from RD 33283 to RD 67448 and partly along Hotar Mr from RD 0 to 10500 with a total length of 8.45 miles. On one side it will connect Kamalia - Bhusi - Pirmahal road and on the other side Kamalia - Sandilianwala road. The area on both sides of the road is very fertile and major crops are wheat sugar cane and cotton. A large number of fruit orchards also exist. The area is thickly populated and the proposed road will help boost up the socio-economic conditions of the people.

Foot bridges and buffalo ghats are also needed and provision for the same has been made in the project estimates.

Road NO. 3.8

The proposed road has been planned partly along Pirmahal Dy. from RD 144902 to RD 156082 and partly along a link to Chak No. 28 with a total length of 4.36 miles. On one

side this road will connect Pirmahal - Sandilianwala road and on the other side Pirmahal - Darkhana road. The area on both sides of the proposed road is very rich in agricultural produce, and a large number of fruit orchards also exist. The area is thickly populated. The proposed road will facilitate easy movement of farm inputs and farm produce. The length along the distributory is only 2.12 miles and as such foot bridges and buffalo ghats are not required.

Road No. 3.9

The road is proposed along Sumunndri Main Drain from RD 4810 to RD 39670 with a length of 6.16 miles. On one side it will connect Kamalia - Sandianwala road and on the other the proposed road No. 3.10. The area which will be served by the road is very fertile with main crops of wheat, sugarcane, cotton annd citrus fruit. The area is also thickly populated.

Foot bridges, village road briges are adequate in number and no provision has been made for the same in the project estimates.

Road No. 3.10

The proposed road has been planned along Burala Branch Canal from RD 410250 to Rd 442792 with a length of 6.16 miles. On one side the road will connect the proposed road No. 3.9 and on the other side Kamalia - Malphatiana

road. The area on both sides of the road is very fertile and needs adequate means of transportation.

The construction of the proposed road will facilitate quicker and cheaper movement of farm produce.

APPENDIX - 4.6

DEPALPUR CANAL SYSTEM

Road No. 4.1

This road begins from Ganda Singh Wala on Lahore - Kasur - Ferozepur road and ends at Mandi Hira Singh. The first part runs along the Link channel from RD 18500 to RD 25974 and the second part along Depalpur Canal from RD 19000 to RD 235236. The total length of the road is 42.37 miles. The area on both side is quite fertile with main crops of wheat, cotton, and sugar cane. Fruit orchards also exist at places. The area on both sides is well populated. Foot bridges at RDs 180950, 199317, 226743 and 232352 need conversion into V.R. bridges. Cattle ghats are also needed at RDs 26700, 40000, 48800, 70,000, 83300, 126700, 141000, 165600, 192500, and 208500.

Road No. 4.2

The road begins from Junction of B.S. Link with Chunnian - Pattoki road, RD 86000 and runs along the link upto RD 262000 having a length of 33.33 miles. The area through which the road is planned is very fertile with main crops of wheat, cotton and sugarcane. A large number of fruit orchards also exist in the area. The road will connect eight existing metalled roads and three proposed

roads number 4.3, 4.5, 4.9. It would thus form a very important link in the road net-work and greatly improve the means of communications in the area.

Road No. 4.3

This road is proposed along Attari Distributory from Rd 00 (near Khudian) to tail RD 128990 and further upto B.S. Link through a connecting link of 0.32 miles. The total length of this road is 25.25 miles. The area along both sides of the proposed road is very productive with main crops of wheat, cotton and sugar cane. The area is thickly populated and the road will benefit the people living there both socially and economically. One foot bridge at RD 58000 will require conversion into a V.R.bridge.

Road No. 4.4

This road is proposed along Chorkot Disty from RD 0 to RD 144908 and then along an existing Katcha track to connect with Kasur - Khuddian - Chunnian road near Chunnian. The total length of the road is 29.73 miles. Most of the area through which the road is proposed is fertile and main crops produced are wheat, rice and sugar cane. The area is also well populated. At present there are practically no means of road communications in the area and the proposed road will open up the area thus facilitating the movement of agriculture products to the Mandi town of Chunnian, Khuddian and Kasur. A

number of existing improvised foot beidges need to be replaced with proper bridges. Buffalo ghats are also needed between RDs 29000 & 30000, RDs 53000 to 54000, RDs 70000 to 71000 and between RD 79000 to RD 80000.

Road No. 4.5

The road is proposed along Pakhoke distributory from its junction with Chunnian - Kanganpur road (RD 81815) and continues upto RD 113500 and then connected with the proposed road No.4.2 along B.S. Link through a small link of 1.0 mile. The total length of the road is 7.0 miles. The area through which the road passes is very fertile with main crops of wheat, cotton, and sugarcane. The area is also thickly populated. The road will greatly improve the means of communications and thus benefit the inhabitants both socially and economically.

Road No. 4.6

The proposed road will run along Bunga Hayat distributory from RD 0 to RD 80200 having a length of 15.19 miles. The road will provide an important cross link connecting Depalpur - Baseerpur road, Hujra - Haveli road, Depalpur Wasawewala road and Depalpur - Pakpattan road. The area on both sides is quite productive with main crops of wheat, cotton and sugarcane. The area is also thickly populated and the road will vastly improve socio-economic conditions of

the people.

Road No. 4.7

The proposed road begins from the junction of Shahmad distributory (RD 7250) and runs upto RD 9750. From there it goes along Mehtabgarh distributory from RD 0 to RD 65000. It is then connected by a short link of 0.94 mile with Pakpattan Canal at RD 24000 and goes upto RD 85900 near Pirghani. The total length of the road is 25.44 miles. The area on both sides of the proposed road is rich in agriculture produce with main crops of wheat, cotton and sugarcane. Fruit orchards also exist at many places. The road will open up vast area where existing means of communication are totally inadequate.

Road No. 4.8

The road begins from the junction of Meharwala distributory with Hujra - Chunnian road and runs along the distributory from RD 0 to RD 14156. The road then follows Mustafabad Minor from RD 0 to RD 75495 and ultimately will be connected with the existing metalled road through a small link of 0.49 miles, so as to form a part of the existing road net-work. The length of the road is 17.17 miles. The road will pass through a very fertile area with main crops of wheat, cotton and sugarcane. The area is also thickly populated.

Road No.4.9

The road is proposed along Kanganpur distributory from RD 0 to RD 94000 and then connected with proposed road No. 4.2 along B.S.Link through a small link of 1.10 miles. The total length of the road is 18.90 miles. The road will connect proposed road No. 4.1 and 4.2 along Depalpur Canal and B.S.Link respectively. The road will open large tracts of land which are very rich in agriculture produce and are also thickly populated. The proposed road will greatly improve socio-economic conditions of the people.

Road No. 4.10

The road is proposed along Depalpur distributory from RD 0 to RD 57880 having a length of 10.96 miles. It will connect existing roads of Hujra - Haveli and Depalpur - Subuki Mahar. The area on both sides is thickly populated and very fertile. Fruit orchards also exist in this area. The road will improve the road cummunications in the area.

APPENDIX 4.7

Canal System - Mailsi

Road No. 5.1

The road begins from the junction of Mailsi Canal with Mailsi - Tibba road. It runs along Mailsi Canal from RD 160241 to RD 219550, along Chit Dain Branch from RD 0 to RD 94840 along Bahishti Distributory from RD 139859 and along Patti Minor from RD 0 to RD 28565. The road is ultimately connected with Jalapur Pirwala Shujabad road. This will be the logest road in the Mailsi canal system with a total length of 61.09 miles. The area through which it passes is very fertile with cash crops of wheat and cotton. The area is also thickly populated. The road will open up very large tracts of land and immensely benefit the people living there both socially and economically.

Road No. 5.2

This road is proposed along Gopal distributory from RD o to its junction with Lodhran - Dunyapur - Khanewal road RD 114858). The length of the road is 21.75 miles. The area on both sides is very fertile with main crops of wheat and cotton. Fruit orchards also exist at places. The area on both sides of the distributory is thickly populated with many villages namely Amirpur, Basti Naqeebabad and Basti Gulabad etc. The mere fact that

parts of the bank are already brick soled from RD 8332 to RD 9644 and from RD 60380 to RD 73506 and even black topped from RD 49223 to RD 60380 is enough to indicate that there is strong justification for this road.

Road No. 5.3

The road is proposed along Mailsi link Canal from its junction with Karampur - Tibba road near Karampur (RD 80000). The road runs along Mailsi link Canal up to RD 133592 and then follows Hari Distributory from RD 0 to RD 89500. A link of 2.30 miles is provided to connect the road with road No. 5.1 along Chit Dian Branch near Manja Head works. The total length of the road is 29.40 miles.

Alghough the proposed reach of Mailsi link Canal is now abandoned the area on both sides is very rich in agriculture produce and is also thickly populated. The same is the position of the area along Hari Distributory. The proposed road will link four existing metalled roads and proposed road No.5.1 and will thus form an important part of the road network. The important Mandi town of Karampur and other villages like Jamala, Ladha Bohr, Shergrh, Ahmadpur and Kot Mahmood etc. are located along this road.

Road No. 5.4

This link road is proposed to connect Lodhran - Jalalpur

Pirwala road from Suiwala to proposed road No. 5.1 along Bahishti Distributory near Karam Ali Wala. A Katcha track already exists which is being used by traffic. There is no existing metalled cross link in between Lodhran and Jalalpur Pirwala and the proposed road will open up a vast area which is very productive in wheat, and cotton. The length of the road is 18.5 miles. The area is well populated and many villages namely Khanwala, Maliwala, Pandiwala, Karianwali, Gullu wala, Mochiwala, Biddah, Sherpur and Musa Khan Jaguwala etc. are located along the road. The proposed road will greatly improve the transportation means in the area.

Road No. 5.5

The road is planned along Mahmood Distributory from its junction with Lodhran - Multan road at RD 60000 to RD 163050. About 1/2 mile link is further provided to connect it with Jalalpur Pirwala - Shujaabad road. The total length of the road is 19.52 miles. The area through which the road is proposed is very fertile with main crops of wheat and cotton. A large number of fruit orchards also exist in the area. At present there are absolutely no means of transportation and the people are facing great hardship. The proposed road will open up the area and will provide an important link to the existing metalled roads of Lodhran - Multan, Lodhran Shujabad and Jalalpur Pirwala - Shujabad.

APPENDIX - 4.8

6. NASIR CANAL SYSTEM

Road No.6.1

This road is along Nasir Branch from Khaberlo regulator RD 278 to Pharo regulator RD 354, whereby it comes to be 17.39 miles long. IT connects Budho Kambrani - Rajo Nizamani road, which joins up Talhar Malli road, completing the circuit. The big villages of Walimuhammad Malkani and Sial are connected with Jhudo, Tando Bago, Talhar and Matli.

Road No.2

This road is along Bhuro Minor. It is 6.63 miles long. It connects Dumbalo - Matli road with Bhudo Kambrani - Talhar road. Villages like Tando Ghulamali, Thari, Dumbalo receive special impetus by this road.

Road No.6.3

This is a link to Alipur Minor road with Salmanshah - Tando Bagho road. It is 2.0 miles long.

Road No.6.4

This road is along Khoski Disty and is 4.36 miles long. It connects Tando Bagho - Jhudo road to Alipur Canal road.

Road No.6.5

This road is along Alipur Minor conneciting Salmanshah - Tando Bagho by a link road. It is 5.38 miles long, stretched by another 2.0 miles to complete the network of roads.

302

APPENDIX - 4.9

7. JAMRAO CANAL SYSTEM

Road No.7.1

Road Along Dalore Distributory

This road is about 10.0 miles long. It offers relief in movement of agricultural produce and production of cottage industries to market from within the triangle formed by the Railway line, Jhol Tando Adam and Kandiari - Tando Adam road. The railway stations of Johl and Noabad are rendered accessible to the people of the area. The people inside the triangle are connected with the National Highway as well. The administrative offices and the courts come within a radius that the out and back journey becomes possible, which will be catered by the public transport service getting extended to the land locked area. Value of the moveable and immoveable properties especially the latter will increase. Thus this road shall boost the economy.

Road No. 7.2 & 3

Road Along Patayoon Distributory

This road is about nine miles long, extended by a connector about two miles long. It joins the Sindhri - Mirpurkhas road with Kandiari - Hyderabad road. The railway station Patayoon is also joined up with the

villages of the area among which the villages Jamsaheb, Patayoon and Khashekali are prominent. This road reaps all the benefits for the people of the area as portrayed in road 7.1 above.

Road No. 7.4

Road From Jamrao Canal Head Along Jamrao Canal

This road is about 17 miles long, upto DIM Branch. A connector along the very canal numbered as road 5 completes its objective by joining it to Hyderabad - Sanghar road. From Sanghar to Jamrao a macadamised road has been constructed, and this road on the other side with base as Sanghar - Hyderabad road completes the triangle and the circuit, opening up rich agriculture fields to the prominent markets of Jhudo Vazirabad Pritamabad and Sanghar. Important villages like Dhand Mirahar, Jam Photalkhan, Arian, Khadro, Gahikhan shall receive the impetus. The Mandi towns themselves shall gain in stature.

Road No. 7.5

Road Along Jamrao Canal

A connection to road No. 4. Its usefulness has been eulogised above. It is 7 miles long.

Road No.7.6

Road Along Jamrao Canal

It is about 8 miles long and by moving along the Jamrao canal acts as a base to complete the triangle formed by the Tando Adam Jhol and Shahdadpur-Jhol road. The people staying in hamlets spread all over along with the residents of Landhi, Liari, Bijar and Shaikh Rahim villages are connected with the big market town of Shahdadpur, and Tando Adam. Access to railway stations of Jhol, Tando Adam and Shahdadpur is also rendered fast and economical.

APPENDIX 4.9.1

JAMRAO/MITHRAO CANAL SYSTEM

Road No. 8.1 to 8.4 Along Mithrao Canal

This stretch of proposed roads 49.8 miles long, connects Khipro/Mirpurkhas road with Umer Kot - Mirpurkhas road with Umar Kot - Samaro - Mirwah - Mirpurkhas road with Kunri - Tandojan Muhammad road. Instead of going by circuitous improvised routes, the trade from Khipro to Kunri can go straight fast and cheap. This road will reduce the overhead cost of the cattle, goats and sheep in transport from this breedig area helping reduce the loss of meat due to road - weariness suffered by animals. Agricultural input will be easily available and cheaper. Produce will pay more.

Road NO. 8.5 Along Naukot Branch

It is 21.1 miles long, extending the benefits gained by road No. 1 to 4 to the area served by Naukot Branch up to Nabisar Jhudo road and beyond to Naukot - Mirpurkhas road. Thus the circuit of the net work of the road is closed, enrishing the huge chunk of land by boosting up economy and providing comforts of movement.

Road No. 8.6 Along Puran Minor and Puran Distributory

It runs five miles on Puran distry and about as many miles on the minor, opening up the villages of Dengan,

Mirkhalid, Mot Mirs, Kot Ghulam Muhammad to the market towns of Jhalluri, Mirpurkhas, Umerkot, Chamber and Digri, by joining up the two roads, at the two ends viz Jhallori - Mirpurkhas road with Samrao Digri road. The connector numbered as 9, which is 1.055 miles in length completes this circuit. So many other small hutted villages will have an easy and fast access to market towns. The cottage industry of goat and camel mats shall receive special impetus, apart from other agricultural produce.

8.7 Road Along Jamrao Canal

This road is 7 miles long. It connects Mirpurkhas Sindhri - and Mirpurkhas - Umerkot road. Jamrao railway station is also rendered accessible to the big villages of Basham, Visro, Kahu and Lashari, apart from impetus to the trade and raising up of the sale prices of the agriculture produce by fast and cheap transport being available.

Road No. 8.8

It is a Puran canal bank road, 4.055 miles long.

Road No. 8.9 Along Jamrao Canal

It is 23.6 miles long and connects Samrao - Umerkot road to Digri - Mirpurkhas road. Two immportant market places of Jhalluri and Jamesabad are directly connected. Landhi

railway station is also rendered within reach of the common man. Agricultural produce can be transported both by rail or road, the latter rendered cheaper by competition among the transporters. Education and health facilities would be more accessable. The Kaim Khani migrant community settled in this area are full of jubilation on knowing the prospects of this road coming up.

Road No. 8.10 Along Puran Distry

It is 18 miles long. It connects, Tandojan Muhammad - Kunri road with Mirpurkhas - Mirwah - Kot Ghulam Muhammad - Jamesabad - Samrao road. It gives access to Kachelo railway station. There are so many new settlements of migrants, principal among which are Bhutta, Chudhary Ghulam Muhammad, Chudhary Hamid. The desert life rigors will be eased down by the light of civilisation being available here. The agricultural inputs will be available in plenty and cheaper. The transportation of the agricultural produce and the cattle for which it is the breeding area will be fast and cheaper.

APPENDIX - 4.9.2

9. GHOTKI FEEDER SYSTEM

Road No.9.1.

Road along Mahi wah. A small stretch of Mahi wah canal, in a length of 8.5 miles is proposed for metalling. It joins at the two ends the Ranwati - Ubauro section of National Highway and a big market centre in developing town of Daharki. The proposed road is expected to meet the much needed transport facility in this area of increasing agricultural potential.

Road No. 9.2.

Road along Masu Wah, there is great scarcity of communication links between rural areas and road/railway lines, and consequent under development of the hinterland. To alleviate the situation the road along Masu Wah, 10 miles length, is proposed to connect Ranwati town to National Highway.

Road No. 9.3.

Road along Masu Wah, it is proposed to provide the necessary link between Ghotki Jarwar and Mirpur town, and complete the road circuit, and enable the area to develop at a rapid rate.

Road No. 9.4.

Road along Dingro wah, there is no reliable route in this region to reach existing main roads leading to places of merchandise. This reach of Dingro wah will provide the link for Ghotki main city, Adilpur and Dadloi.

Road No. 9.5.

Road along Mahersro wah in length of 10 miles will carry all traffic to National Highway and open the area covered by the villages Salhani, Dost Muhammad and Pano Akil town.

Road No. 9.6.

It is the link connecting tail of Mahesro canal road to existing road to complete the circuit.

Road 9.7.

Road along Bumbli Minor. The facility provided by this canal road will contribute to the conversion of purely agricultural markets to processing and manufacturing markets. In this region is concentration of local skilled workers.

Road No.9.8.

This canal road along Chotki feeder will serve as the main stream of traffic from Ranwati to Bakro catering

for the goods transport requirements of the long and rich strip of fertile cultivable lands between the feeder and Karachi - Lahore National Highway.

Road No. 9.9.

Road along Bundh minor is a small length of 3.5 miles making a link between Chotki Feeder Canal road to National Highway. With passage of time and development of the area the usefulness of the road will continue increasing.

Road No. 9.10

This is a small link connecting Bumbli canal road with the existing road network.

Road No.9.11.

Along Bakro Minor, the road 3.5 mile long is proposed to connect the end of main Ghotki Feeder road with National Highway, serving Belo Bakro, Bimuthi, Muhammad pur village centres.

Road No. 9.12.

Along Masu wah to provide a very important line of transport facility for growing and developing villages of Hayat Pitafi, Khan Garh and the major Head Quarters, Ghotki. It is 4.5 miles in length.

211

Road No. 9.13

Road along Kazi wah about 14 miles long runs through the centre of agricultural command of Ghotki Feeder. It joins together a number of towns and meets the pressing need of a road for quick and convenient means of transport for all such under developed areas, namely warah, Adilpur, Shahal-Gadani, Dari, Kazi Badal, Saleh Mahar, Dost Muhammad, Mola Ali, and Sultanpur etc.

Road No. 9.14.

Along Korai wah, the proposed road, less than 3 miles, will cut through the link formed by Sangi byepass and main National Highway, to save the time, energy and expense by avioding a long diversion along the loop.

APPENDIX - 4.9.3

10. ROHRI CANAL SYSTEM

Road No. 10.1.

Road along Bohgri minor, this small length of canal road i.e. 3.6 miles, connects Karachi - Lahore National Highway with Mehrabpur town and Lakha railway station.

Road No. 10.2.

A link road for Bhogri canal road.

Road No. 10.3.

Along Nauabad distry which carries heavy traffic at present and is of vital importance. The existing roads around are not adequate and a road link about 10 miles in length between Kandiaro - Lakh· and tharushah Chang roads is warranted.

Road No.10.4 and 10.5.

Road along Bhiria and Khahi Qasim will cater for the transport needs, not only of large tracts of farm lands but mercantile of Jalbani, Chann, Runia and partly of Bhiria, Naushahro Feroz, and Padidan etc. This proposed canal road along the two channels is 8 miles long.

Road No. 10.6 and 10.7.

Road along Sangi distry, it runs roughly parallel for a

length of 8 miles to Bhiria - Khahi canal road at an interval of about 5 miles and goes further by 5 miles supplementing the service of urgently needed transport facility in the large expanse of area between National Highway and Nawabshah district boundary. Considerable improvement is anticipated in the agricultural economy and rapid development tempo in local trade and commerce.

Road No. 10.8.

Road along Jamal Shah was proposed in view of its importance and the present pressure of traffic plying unlawfully along the canal banks. The necessity of metalling the canal path to afford relief to stranded agriculture and business community was felt by the Government of Sind. The reach between RD 23 to 63 is presently being metalled. The remaining portions, namely 0 to 23 and 63 to 73 are proposed in this project.

Road No. 10.9.

Road along Jaskani, Jaskani minor runs through a thick cluster of rural villges having a promising future and sound economic growth, given the basic infrastructure, particularly roads. The existing inadequte roads at present carry ever increasing amount of agricultural traffic and commercial transportation of the surrounding areas, comprising mainly Phull, Sadhjua Duro Behan, Mubarak Buriro, Qamar Channa, Danbir and Jan Mohammad

Sial etc. The length of road proposed is 9.47 miles.

Road No. 10.10

Along Thul Branch, the 6.5 miles along canal road proposed provides direct connection between two existing main roads. The utility is self evident, specially the quick and easy facility for Alnoor sugar mills and railway station Daulatpur.

APPENDIX 4.9.4

11. DADU CANAL SYSTEM

Road No.11.1.

Along Piaro goth distributory in a stretch of about 7 miles is intended to connect main Indus Highway and Piargoth Kakar roads forming a large enclosure of rich sugar cane farms. This provides a short cut to Indus Highway for movement of inputs and outputs of lands to major markets and central markets of Hyderabad and Karachi.

Road No. 11.2.

Along Kakar distry, it provides the third side to the triangle joining main sita station to Boriri, while other two sides meet at Kharipur Nathan Shah, a developing town, both commercially and industrially; Kakar canal road runs in 6.5 miles.

Road No. 11.3.

Road along Pahore minor is proposed to satisfy the needs of the farming community scattered along the commanded areas to Phulji for carriage of goods, by a new road of 7.5 miles.

Road No. 11.4.

Road along Lakha distry, Dadu district is well known for

its backward condition for want of supporting services mainly the roads. To redress the difficulties, constraint of adequate transport facility ranks at top priority. By Lakha canal road of 7 miles, the canal irrigated area between flood protection bund and main Nara Valley drain will find access to Johi town and there from to Dadu District Head quarters.

Road No. 11.5.

Along MNV drain which provides a part of the circuit formed by Lakha canal road joining Johi Dadu road. The length of drain road is about 8.5 miles.

Road No. 11.6.

A small link connecting Pahore canal road (5.3) to Phulji village, so as to realize the intended benefits.

Road No. 11.7.

Along Dadu canal from mile 97 to mile 121 on the right side of Indus river protection bund connecting major town, enroute to Dadu Moro bridge, and opening up all agricultural areas to present and prospective market places.

Inqilab Road, Phandu Road, Shamshatto Road, Urmar Road and Chirat Road. All these roads are very important and carry heavy traffic.

The patrol roads along Kabul River Canals were constructed for the purpose of inspection and maintenance but now have been opened to public use. With the recent development in the country, the pace of development in this area has increased tremendously and the farmers are using these patrol roads for transportaton of fertilizers and the farm produce to the nearby markets. To cope up with the increased vehicular traffic, it would be necessary to metal the earthen bank. Provision for a few causeways on nullahs, remodelling of three head regulators and retaining walls at places to improve the width of road near villages has been made in the project estimates.

Road No. 12.3.

Road along Warsak Gravity canal RD 147000 - 184626. Warsak Gravity canal was commissioned in the year 1962 and has a full supply discharge of 311 cusecs and irrigates an area of 58522 acres. Patrol road along the canal had initially been constructed for the purpose of inspection. The barren area has been brought under cultivation and new villages and settlements have come up. This canal patrol road is the only means of communication which is being used extensively by the

Previous Page Blank

inhabitants for bringing inputs for their lands and transportation of their produce to main towns. Afghan Refugee camps have been established all along this canal due to easy approach because of canal patrol road and availability of space and water. All day to day requirements of Afghan Refugees are transported to the camps on these roads.

The process of deterioration of this katcha patrol road has accelerated as this was not meant for this magnitude of traffic. It is therefore, necessary to provide a black top surface.

A provision for 900 rft of causeways has been made so as to facilitate traffic during clear weather through the Nallahs crossing the canal alignment.

APPENDIX - 4.9.6

PAHARPUR CANAL SYSTEM

Road No. 13.1 and 13.2.

Road along Paharpur Canal RD 20000 to 129000 & RD 198000/256000. Paharpur Canal was an inundation canal with its head from Bilot Creek. The control of this canal was transferred to irrigation department in 1931. After completion of Chashma Barrage in 1972 the canal is in a position to run a perennial discharge of 480 cuscs and after remodelling, it is irrigating an area of 112000 acres. The patrol road originally constructed for inspection purposes is now open to public traffic due to non-existance of other means of communications. The farmers are now using these roads for the purpose of transportating their fertilizers and agriculture produce of approximately 330000 tons to the markets.

Construction of Chashma Right Bank canal project is at present in full swing in this area and the patrol roads along Paharpur Canal System are in use of the contractors, labour, Wapda and Consultants. Several Nullahs crossing Paharpur canal are the main source of stone, Bajri, Pitrun Gravel etc., in the area and hundreds of trucks are daily engaged in transportation of construction material along the patrol roads. Moreovers camps of Afghan Refugees have been established

along the canaldue to easy approach and availability of space, water and fodder etc., Afghan refugees have started regular Bus/Wagon services to their camps and the intensity of traffic has thus increased manifold.
It is therefore, immperative to provide black top surface in the above mentioned reach. It amy be mentioned here that the first reach has already been shingled under Income Generating Scheme for refugees last year and if not protected with proper road metalling and triple surface treatment, it will be spoiled by heavy traffic.

All the structures will be remodelled under CRBC and as such provision only for four Irish crossings has been made.

APPENDIX - 4.9.7

Marwat Canal System

Road No. 14.1.

Road along Kheru Khel distry. RD 0 - 66900.

Marwat canal system along with Baran Dam across Kurram River near Bannu was completed during early sixties and within a short period of about twenty years most of the area has been brought under cultivation. New colonies are now coming up and people are getting settled to farming, and construction of new communication facilities is the demand of the day. Kheru Khel distributory takes off from Marwat Main canal with a discharge of 52 cusces and irrigates a fertile area of about 13000 acres of villages, Tajazai, Bakhmal tajori, Khawaja Khel, Adamzai and other villages. The patrol road along it is all earthen and cannot take the heavy traffic of the fast developing area. A vast fertile area will be opened up with the improved communication facilities to the farmers for transporting their badly needed farm inputs and the agriculture produce to the near by markets at Lakki, Naurang Sarai and Tajazai.

Road No. 14.2.

Road along Saradarga Disty. RD 0 - 21500.

This disty takes off from Marwat Main canal at RD 95000 with a dischage of 184 cusces and serves an area of

about 34000 acres. The only road connecting this vast area is Bannu Jani Khel Road which crosses it at RD 2000 while other roads do not reach it due to non existance of bridges across the rivers and ravines. The area on both sides is very fertile and needs to be connected with Jani Khel road so as to accelerate the pace of development in the area. The katcha canal road is the only means of communication in the area and cannot take up the heavey trffic specially during flood and rainy season. The original proposal of providing a connection with BXU, DIK road through Khan Khel Minor and Kotkashmir was not found feasible as it involved construction of a huge bridge over Gambila river with a 5 miles long link. However, a detailed feasibility study in this regard must be made at a later stage to accelerate the pace of development in the area. Anyway, the proposed metalling of the patrol road RD 0 - 21500 will help a lot in raising the socio-economic standards of the farmers.

Road No.14.3

Road along Khan Khel Mandaizai Minor 0 - 45750.

This minor takes off from Saradaga disty. at RD 21500 and earthen patrol road along it up to its tail at RD 45750 is serving the needs of the inhabitants. The increased traffic due to developmental activities in the area cannot be met by the dirt road specially during

rainy season and it is imperative to provide it with a balck top surface. This road will linkup the fertile area on its both sides with Bannu Jani Khel - Tajazai - Tajori - Kheru Khel road which is already metalled. The farmers will thus be provided with improved communication facilities which will help them in transportation of their very badly needed farm inputs and farm produce tothe nearby markets thus raising their socio - economic status.

Road No. 14.4.

Road along Narmi Khel Minor RD 0 to 14000

This minor takes off from Marwat Main Canal at RD 71200 with a discharge of 8 cusces and serves an area of 2000 acres. Patrol road along it meets existing metalled Bannu - Jani Khel road at its tail and to open up this area it is essential to black top this road. The area lying on its both sides is very fertile and the farmers will get improved communication facilities for transportation of their farm inputs and produce to the nearby markets.

APPENDIX - 4.9.8

Upper Swat Canal System

Road No. 15.1.

Road along Pirsaddo Disty RD 0 - 4500 and 15000 - 32600. Pirsaddo disty takes off from Abazai Branch of Upper Swat Canal and its length from RD 4500 to 15000 upto Baddragga village is already metalled and is connected with Shergarh road network. The portion between RD 0 to 4500 and beyond RD 15000 passes through very thickly populated and fertile cultivated lands on both sides. At RD 32600, this road meets Pirsaddo village metalled road leading to Jallala village on Mardan Malakand road. The proposed road will open up this area towards main market along Mardan Malakand road and will provide improved communication facilities to the farmers and raise their socio-economic standards.

Road No. 15.2 Machai Branch.

Machai Branch takes off from Main Upper Swat Canal near Dargai with a discharge of about 2000 cusces and is he main source for irrigating the fertile lands of Mardan district. The existing Patrol roads are mostly earthern and the full development of the area was achieved long ago and the intensity of traffic has increased manifold. Patrol road along Maria Branch has already

325

been metalled from RD 0 to 66000, 79200 to 91000 and 213000 to its tail. The metalling of portions in between had been deferred to better occasion for want of funds in the past. The patrol road along Machai Branch RD 66000 - 79200 turns round the syphon at RD75400 passing over the syphon tubes and has got to be shifted to the right through a new bridge at RD 73400 where it will join the Chamunan - Lund Khwar metalled road and then pass through a diversion 10100 feet long to meet RD 79200 of Machai Branch. Due to difficult hilly terrrain, it was not possible to construct a patrol road close to the canal at the time of construction. The patrol road beyond RD 79200 upto Katlong Rest House at RD 91800 and along Saidabad disty is already metalled. From Katlong there is a metalled road upto Mardan. Beyond RD 95000 the branch passes through a number of tunnnels till it emerges out at RD 113000 from where it is aligned on contour. Due to the existance of very difficult hilly terain, it has not been possible to construct the patrol road closer to the canal and a detour had to be resorted to.

The existing detour of patrol road is proposed to be rehabilitated and provided with a black top road to open up the area in between. The canal patrol road is proposed to be metalled from RD 113000 to 213000 which will open up the wide canal area and connect it with the existing network of metalled roads.

Some of the existing structures will need remodelling or reconstruction for which provision has been made. Two bridges, 55' span, have been included.

Road No. 15.3.

Road along Saidabad Disty RD 23800 - 52412.

Saidabad disty takes off from M[illegible]hai branch at RD 79200 and patrol road along it has already been metalled upto Lund-Khwar road crossing at RD 23800. The portion between RD 23800 and its tail is proposed to be metalled as the existing dirt road cannot stand the heavy traffic of the area and remains impassable especially during rainy season. The proposed road will meet the patrol road along Kalpani disty of lower Swat canal which leads to Mardan and is partly metalled. The area on its both sides is very fertile and is not served by any other road in the vicinity. It would, therefore, be a great help to the farmers to enable them to take their inputs and farm produce to the nearby markets by metalling this road.

There is an aquaduct over a deep ravine at RD 32000 where the patrol road goes along a detour. Provision has been made for constructing a bridge at this site in the project to rehabilitate the patrol road along its original alignment. Alternatively the existing detour will be followed and metalled.

Road No. 15.4.

The exsiting earthen patrol road along Pahur Branch from Rd 0 - Rd 6750 is bounded by metalled roads along Machai Branch and road along Darra Minor leading to Tutali in ex-Swat state and runs along Pehur Branch upto RD 19000. There is a very long syphon on Badri Nullah which would require a 600' long bridge to connect it with the patrol road on the other side. The portion of earthen road along this channel from RD 24000 to tail is proposed to be connected to Jhanda Boka road through a portion of Kaddi Minor with a view to open up this very fertile area of about 8000 acres.

The project will afford improved transportation facilities to the irrigators for taking their farm produce to the adjoining markets and will thus help in raising their socio-economic status.

Road No. 15.5

Road along Dagi Disty RD 0 - 10600 and Dargai Minor 0 - 22000.

Road along Dagi disty takes off from Maira branch with a discharge of 35 cusces and irrigates a very fertile area of 7000 acres of villages Baghai, Managai, Dan-Doka and Sadri villages on its both sides. The proposed road, if metalled, will open up this area with metalled Dagai Turlandi road through Dagi Minor which runs in

continuation of Dagi distributory. The portion of road along Maira branch between RD 0 and 62000 is already metalled and as such the proposed road will form a good component of the existing network of metalled roads in the area. This project will provide improved means of communications to the irrigators of the area and will raise their socio-economic standards. The head of this distributory is on the right side whereas the metalled patrol road is on the left of Maira branch. The existing means of crossing is a 9.5' wide V.R. bridge about 1000' down stream which cannot take up class AA loading traffic. Provision for a new bridge at the off take point has been made in the project.

Road No.15.6

Road along Kalu Khan disty RD 0 - 16096.

Kalu Khan disty takes off from Machai branch at RD 221550 with a discharge of 35 cusces and irrgates about 7000 acres of land of villages Spinkani, Shaikh Jana, Nawankilli and Turlanndi. The patrol road along the channel is the only road passing through difficult hilly terrain and meets Swabi Mardan road at RD 16096. This road if metalled will open up this fertile area and some area along Machai branch and will form a part of network of roads in the area. The area served by the disty is very fertile and providing improved means of communications will go a long way in raising the socio-

economic standards of the irrigators.

The channel takes off from the right bank of Machai branch and to connect it with proposed metalled road on left side, it would be necessary to provide a new bridge across Machai branch, provision for which has been made in the project estimates.

Road No. 15.7

Road along Daulat Minor RD 0 - 27250

Daulat Minor takes off from Maira Branch with a discharge of 30 cusecs and irrigates a very fertile area of 6000 acres of villages Daulat, Gumbat, Gidar and Mandar. At RD 27250 the patrol road along this minor meets Dhobian Yarhussain Road of C&W Department and the portion in continuation of RD 27250 meets another blacktop road to Garhi Daulat Zai. The dirt road cannot be used by the farmers for taking their produce to the market especially during rainy season. The metalling of this road will connect this area with the adjoining roads network at one end and the newly proposed metalled road along Maira Branch at the other, thus providing a short cut to the adjoining area.

Road No. 15.8

Road along Maira Branch RD 62000 - 145750.

The patrol road along Maira Branch from RD 0 - 62000 has already been metalled in the past due to its importance

on account of being the only link between Gohati and Jagan - Nath - Yarhussain area. Maira Branch is a sizeable canal of about 860 cusecs discharge irrigating an area of about 172000 acres of Mardan and Peshawar districts. Many new colonies have cropped up in the near especially those of Afghan refugees all along this canal due to easy approach because of canal patrol road and availability of space, water and fodder. This road will also enable the farmers to transport their farm inputs and produce to the nearby markets. It will also form a good link with Risalpur through newly proposed roads in the area. A number of drainage culverts, two head regulators and three village road bridges shall have to be remodelled or reconstructed to allow for the road width of 28 feet, and provision, therefore, has been made in the project estimates.

Road No. 15.9

Road along Chowky Disty RD 0 - 20400.

This disty takes off from the tail of Maira branch with a full supply discharge of 60 susecs and irrigates 12000 acres of very fertile area of Marhati and adjoining villages. In the absence of suitable roads in the area, the only existing canal patrol road is being used by the farmers for transportation of their inputs and produce to Nowshera, Risalpur area. The canal patrol road being earthen, cannot take the intensity of traffic especially during rainy season. This road will also

form a part of the Maira Branch Risalpur road link and the traffic will increase maniflod on account of opening up of this large tract of irrigated area. It joins Chowky Minor No. 2 at RD 20400 where from it will facilitate the traffic to Zando village through a link. The road beyond Zando to Risalpur is already metalled and thus Chowky disty will form a part of the proposed network.

Road No. 15.10

Chowky Minor No. 2 RD 0 - 6000 with link.

Chowky Minor No. 2 takes off from RD 20400 of Chowky distributory and an earthen patrol road runs in its continuation up to a distance of 6000 feet where it meets an earthen link road one mile in length finally joining a metalled road near Zando village leading to Risalpur Cantt. The proposed road will form a part of Maira Risalpur road and open up a vast tract of fertile irrigated land of Mardan district. The portion of earthen C&W road between this minor and Zando - Risalpur road - about one mile in length - is also proposed to be metalled so as to complete the Maira - Risalpur Cantt link. Three road culverts have been provided in the project to cater for the drainage requirements of the proposed link.

Road No. 15.11

Road along Toru Minor RD 0 - 15000.

Toru Minor takes off from RD 142100 of Maira branch with a full supply discharge of 15 cusces and irrigates a very fertile area of 3000 acres on both sides. The existing Kacha Patrol road being used by the irrigators cannot stand the heavy vehicular traffic and in the event of providing it a bridge across Maira branch near its head and connecting it with Maira Risalpur road, the intensity of traffic will increase further. The area is very fertile and the road if black topped will provided a suitable connection to markets and will improve the social and economic standard of the farmers.

Provision for a bridge across Maira branch at its head has been made in the project with a view to connect it with Maira Risalpur Road.

Road No. 15.12

Road along Indus Branch RD 130000 to 135200.

Indus branch is aligned through sandy terrain in its head reach and irrigation Rest House Jalbai or through its minors near Swabi Jhangira road. The existing patrol road in this reach and onwards to Jahangira along Jahangira minor is earthen and traffic remains suspended during most of the year especially after rains when it becomes impassable. The area on both sides is fertile

and the farmers cannot take their farm produce to the market. This road if black topped in continuation with Jahangira Swabi metalled road will improve the socio-economical standard of the farmers.

Road No. 15.13.

Road along Jahabgira Minor RD 0 - 15250.

Jhangira Minor takes off from Indus Branch at its tail with a discharge of 14 cusces and irrigates about 2800 acres of very fertile land of Jalbai, Jahangira and Jalsai villages on its both sides. The farmers have been using this patrol road for their transportation but due to rains it has been eroded in most of its length and has become impassable. The patrol road needs rehabilitation and black topping so as to facilitate transportation and communications in this area and connect it with nearby markets of Jahangira, Tordher and other villages. The road passes through steep terrain and will require side drains on the right side and suitable protection against scour. The road will improve the socio-economic condition of the irrgators of the area.

APPENDIX 4.10

SIND PROVINCE

BREAK - UP

OF

PROPOSED DRAIN ROADS

16. KOTRI DRAINAGE SYSTEM

No.	Name of Channel	Length in Canal Rds.	Length in Road Miles	Estimated Cost MRs.
16.1	Along Ghorabi outfall connecting Mirpur Sakro - Gharo road & Mirpur Sakro-Pir-Patho road		20.0	
	Link		2.0	25.398
16.2	Along Leghari branch drain system to connect Sujawal-Tando Ikram & Mirpur Sakro Khorewah-Tarai roads		6.0	
	Link		2.0	9.272
16.3	Along Ladlyoon branch drain connecting Sujawal-Ch.Jamali and Ch. Jamali - Jali road		10.0	
	Link		1.0	12.174
16.4	Along Bathoro branch drain connecting the road of Mirpur Sarko with Thatta-Sujawal road		10.0	11.669
16.5	Along Nagan Dhoro outfall drain connecting Sujawal-Jati and Jati-Ch. Jamali roads		11.00	13.308
	TOTAL		62.0	71.821

AVERAGE COST PER MILE 1.158 MRs.

APPENDIX 5.1

PAVEMENT DESIGN

Assuming average traffic count of commercial vehicles as 100 vehicles per day, the design of the flexible pavement as per Road Note No.31 is presented as follows:-

DESIGN PARAMETERS

Design life = 10 years.

Growth Rate = 7%

Commercial vehicles repetitions during design life. = 0.27×10^6

Conversion Factor. = 0.89

(analysis attached)

Assumed Design CBR. = 7%

Cumulative No.of equivalent standard axles

$$= 0.27 \times 10^6 \times 0.89$$

$$= 0.24 \times 10^6$$

Source : Road Note No. 31. Overseas Unit

Transport and Road Research Laboratory U.K.

PAVEMENT DESIGN(From Road Note 31 Charts)

Sub-base = 6"

Base: = 6"

Surfacing: = Triple Surface Treatment using 79 lbs of bitumen and 9.75 cft of chippings/100 sq.ft.

ANALYSIS FOR CONVERSION FACTOR

A.D.T. of commercial vehicles = say 100 both ways. The break-up of this ADT of 100 commercial vehicles is :-

	ATD Base Year	Projected ATD 10 Years	Average
Buses	= 20	39	30
Trucks	= 35	69	52
Tractor Trolleys	= 45 / 100	89	67 / 149

Commercial Vehicle in single direction 75

For analysis purpose it is assumed that 30% of the trucks and 50% of tractor trollies would be empty. The buses are usually loaded.

Out of the loaded trucks it is further assumed that 15% would be overloaded and the remaining 55% are normally loaded.

The spectrum of traffic from loading conditions would then be :-

Empty trucks	= 30% of 52	= 15 Nos.
Overloaded trucks	= 15% of 52	= 8 Nos.
Normally loaded trucks	= 52-23	= 29 Nos.
Tractor trollies empty	= 50% of 67	= 34 Nos.
Tractor trollies loaded	= 67-34	= 33 Nos.
Buses (loaded)		= 20 Nos.

Axle load distribution in trucks/buses = 1/3rd front axle

= 2/3rd rear axle

Axle load distribution tractor trollies

= 10% on front axle of Tractor

= 20% on rear axle of Tractor

= 70% of Trolley axle

Axle Loading

Commercial Vehicles	Gross wt. (Lbs)	Front Axle (Lbs)	Rear Axle (Lbs)	Trolley Axle (Lbs)
Empty Trucks (4 tons)	8960	2987(33%)	5973(66%)	
Overloaded (16 tons)	35840	11950(33%)	23890(66%)	
Normally loaded (12 tons)	26880	8960(33%)	17920(66%)	
Buses (10 tons)	22400	7470(33%)	14930(66%)	
Empty tractor trolley (3 tons)	6720	672 (10%)	1344(20%)	4704(70%)
Loaded tractor trolley (13 tonnes)	29120	2912 (10%)	5624(20%)	20384(70%)

Source : Road Note 31

Equivalent Standard Axles

(Pt=2.0 SN=3)

S. No.	Single Axles Load (Lbs)	Single Axles Load (Kips)	No.of Single Axles	AASHTO Equiva-lency Factors	Equivalent 18-kips Standard Axles
1.	2987	2.99	15	0.0007	0.011
2.	5973	5.97	15	0.01	0.150
3.	11950	11.95	8	0.19	1.520
4.	23890	23.89	8	3.43	27.440
5.	8960	8.96	29	0.06	1.740
6.	17920	17.92	29	1.00	29.00
7.	672	0.67	34	-	-
8.	1344	1.34	34	-	-
9.	4704	4.70	34	0.001	0.034
10.	2912	2.91	33	0.0007	0.023
11.	5824	5.82	33	0.01	0.330
12.	20384	20.38	33	1.71	56.43
13.	7470	7.47	30	0.03	0.90
14.	14930	14.93	30	0.50	15.00
				Total	132.58

Conversion factor = 132.58/149 = 0.89

Com.Vehicle Repetitions during design life = 365 x 10 x 75

$= 0.27 \times 10^{6}$

Cumulative standard axle repetitions. $= 0.27 \times 10^{6} \times 0.89$

$= 0.24 \times 10^{6}$

339

APPENDIX 5.2

SPECIFICATIONS

While constructing the embankments, the pavement and the road structures the specifications presently being followed by the Provincial Highway Department will be used. An abstract of the specifications of different elements of construction are described hereafter:-

Sub - Grade

i) Where the subgrade has to be constructed on a lower level adjoining the bank of the canal clearing and grubbing will be done along the right of the way to remove bushes, grass, weeds, roots and rubbish etc.

In the case of trees, only such trees will be removed that would interfere with the construction and all other trees shall be left in place to the greatest extent practicable. The material thus cleared from the site of the works shall be suitably disposed of. When sufficient embankment material is not available from the spoil bank of the canals, earth will be borrowed from a borrow area designated by the Engineer in charge. The embankment shall be constructed to grades and cross-sections shown on the plans.

Embankment Compaction

Compaction :

All embankments shall be compacted in accordance with the following requirements.

Each layer of embankment material, except layers consisting of stones shall be moistened or dried uniformly to the optimum moisture content and then thoroughly mixed with a blade grader or disc harrow or any other suitable equipment and then compacted by rolling with sheeps foot roller or vibratory pad foot roller. Smooth steel wheel rollers will not be used.

Moisture Content

Materials shall be at a moisture content + 2% optimum moisture (AASHO T-180). If not, either water shall be added or the material permitted to dry until the proper moisture content for the specified compaction is obtained.

Compaction Requirements:

The subgrade embankment shall be compacted to at least 95% modified AASHO, maximum dry density for at least 3'in depth over the full width. Those portions below 3 feet of the finished subgrade level shall be compacted to at least 85% of the modified AASHO maximum dry density, to their full depth and width.

The compaction of each and every layer shall be tested and approved before the next layer of fill is placed. The result in ten consecutive tests may not fall below 95% compaction and no result shall be below 93% in the case of the upper 3 feet of the sub grade. Likewise for the lower portion, the degree of relative compaction shall be 85 percent for at least 9 out of 10 consecutive tests and for the tenth, it shall not be below 83%.

Removal of Unsuitable Material

All soft and yielding material and other portion of subgrade which will not compact readily, shall be removed and replaced with suitable material and the whole subgrade brought to line and grade with proper allowance for subsequent compaction. The grade in both cuts and fills shall then be thoroughly plowed and mixed to a depth at least 12 inches below grade.

All submerged stumps, roots or other perishable matter encountered in the preparation of the sub grade shall be removed to a depth at least two feet below subgrade.

In the case of roads which are built over canal banks the compaction of the bank will be checked and if found to be less than specified, the top 2 ft of the embankment shall be stripped, refilled compacted and tested to comply with the specifications.

Sub-base Course

The material for the sub base course being used in the three Provinces is pit run/bed gravel or crushed stone aggregate whichever is cheaper. The naturally occuring gravel or gravel-sand-clay, should have a CBR of 25 percent or more at the density and moisture content expected in the field. If the CBR of the sub-grade is 25% or more, no sub-base is required.

Soil Aggregate Materials

The soil aggregate material shall consist of course and fine aggregate conforming to the grading requirement of Table 5.2.1 and shall be free from vegetable matter :-

TABLE

GRADING REQUIREMENTS FOR SOIL AGGREGATE MATERIALS

Sieve Designation	Percentage by weight passing square mesh sieves					
	Grading					
	A	B	C	D	E	F
2 in.	100	100	--	--	--	--
1 in.	60-80	75-95	100	100	100	100
3/8 in.	30-65	40-75	50-85	60-100	75-100	85-100
No.4	25-55	30-60	35-65	50-85	55-100	70-100
No.10	15-40	20-45	25-50	40-70	40-100	55-100
No.40	8-20	15-30	15-30	25-45	20-50	30-70
No.200	2-8	5-20	5-15	10-25	6-20	8-25

Source:Road Research and Material Testing Institute Lahore Publication on

(Highway Materials Construction and Quality Control)

Coarse Aggregate

Coarse aggregate shall consist of hard durable fragments of stone, or gravel or brick suitably crushed to give the required grading and may include some sand or other finely divided mineral matter. The coarse aggregate shall have a percentage wear by the Los Angeles abrasion machine test of not more than 50 at 500 revolutions as determined by AASHO T-96.

Fine Aggregate

The fine aggregate shall consist of finely divided mineral matter (sand silt). The fraction passing the No.200 sieve shall not be greater than two thirds of the fraction passing the No. 40 sieve. The fraction passing No.40 sieve shall have a liquid limit not greater than 25 and plasticity index not greater than 6.

Blending Materials

If fine aggregate or filler in addition to that naturally present in the material, is necessary in order to meet the grading requirements, or for satisfactory bonding of the materials, it shall be uniformly blended with the material at the screening and crushing plant or on the road. The material for such purpose shall be obtained from sources approved by the Engineer and shall be free from hard lumps. If the blending is done at the crushing and screening plant, and the material is then

transported over a distance, water shall be added to prevent segregation.

CONSTRUCTION

Preparation of Subgrade

The subgrade including shoulders snall be constructed, prepared, and finished as per the specified cross-section.

Placing

The sub base course shall be placed on the prepared sub-grade and compacted in layers. The compacted thickness of each layer shall not be more than 4.5" or less than 3". Before placing the second layer the first layer will be shaped, compacted and tested.

Adding Blending Material

When additional fine aggregate or filler is required and it is to be blended with the material on the road, the blending material shall be uniformly placed by spreader boxes or other approved devices.

Mixing and Spreading

After each layer of sub base course material has been placed and blending material added it shall be thoroughly mixed to its full depth by means of power graders, travelling mixers, or other mixing equipment or

manually as approved by the Engineer. During the mixing, water shall be added in the amount necessary to provide the optimum moisture content for compacting. When uniformly mixed, the mixture shall be spread smoothly to a uniform thickness or, in the case of the top layer, to the cross section shown on the plan.

Compaction

Immediately following final spreading and smoothing of the embankment, each layer shall be compacted to the full width by means of a sheepsfoot or pad foot self propelled vibratory compactor.

During the progress of the work, the Engineer or his representative shall make density tests in accordance with AASHO T-117, modified to include only material passing a 3/4 inch sieve. If the density is less than 100 percent of the maximum density as determined by AASHO T-180 (Modified Proctor), additional compaction will be necessary.

Base Course Water Bound Macadam

Description

This work shall consist of constructing a base course compsed of crushed stone or crushed gravel aggregate placed and compacted with moisture control on a prepared sub-grade thickness and cross section shown on the plan.

The following base materials wil be used.

i. Mechanically - stable gravel or crushed gravel.

ii. Crushed rock.

Natural gravels

Gravels suitable for road base under bitumenious surfacings may be lateritic or quarzitic gravels, river gravels, decomposed rocks etc. They must have a grading that is mechanically stable and must contain sufficient fines to provide a dense material. Table 5.2-2 gives typical grading limits of suitable materials.

The fines should preferably be non-plastic or failing that the plasticity index of fine material should not exceed 6. Similarily the linear shrinkage of the fines should not exceed 4, and the liquid limit should not exceed 25. The gravel should be compacted to a field density equal to or greater than the maximum dry density achieved in the British Standard compaction test 2.5 kg (5.5 lbs) rammer method. When compacted to this density in the laboratory the material should have a CBR of at least 80% after four days immersion in water.

Care should be taken in selecting gravels derived from whethered igneous rock; large fragments appearing to be sound may contain minerals that are already decomposed. These will rapidly break down into clay when the material is used in the road; basic rocks like basalt and dolerite are particularly prone to this weakness.

Table 5.2.2

Typical limits of particle size distributions

for mechnically-stable natural gravel for use as road base Material

BS Sieve (18) Size	Percentage Passing			
	Nominal Maximum Size			
	1 1/2 Inch	3/4 Inch	3/8 Inch	3/16 Inch
1 1/2 inch	100	-	-	-
3/4 inch	80 - 100	100	-	-
3/8 inch	55 - 80	80 - 100	100	-
3/16 inch	40 - 60	50 - 75	80 - 100	100
No. 7	30 - 50	35 - 60	50 - 80	80 - 100
No. 14	-	-	40 - 65	50 - 80
No. 25	15 - 30	15 - 35	-	30 - 60
No. 52	-	-	20 - 40	20 - 45
No. 200	5 - 15	5 - 15	10 - 25	10 - 25

NOTES:

1. Note less than 10 percent should be retained between each pair of successive sieves, except for the two largest sieves listed foreach of the four nominal maximum sizes of material.

2. The two smaller sized materials (3/8" & 3/16") may contain up to 35 percent of stones up to 1 1/2" size provided that the material smaller than 3/16" is within the limits shown.

3. It is common to specify that well-rounded gravels with grading similar to the (1 1/2 inch) nominal maximum size must be crushed to give 40 percent of their stones angular faces. Crushing the smaller sized materials is difficult and usually destroys the grading. It is not normally recommended.

4. The plasticity index of the material passing NO.40 sieve normally should not exceed 6. In dry areas where the subgrade moisture is in category III the PI may be increased to 12.

Crushed Stone

For water bound macadam, the base should be made up of layers of sound single-sized stone 1 1/2 inch to 2 inch nominal size. As each layer is laid, fines are rolled and watered into the surface to produce a dense material. The compacted thickness of each layer should not exceed twice the maximum size of stone. The fines should be less than 1/4 inch maximum size, preferably well graded, and they must be non-plastic.

When properly constructed, crushed stone base will have CBR value well in excess of 80%.

Table 5.2.3 gives grading limits for crushed stone base material.

In table 5.2-3, the percentage passing No.200 sieve should be chosen carefully according to the grading and plasticity of this fraction. If the plasticity index of the fines approaches the upper limit of 6, it is desirable that the fines content is restricted to the lower end of the range. For material with non-plastic fines, the proportion passing No. 200 sieve should approach 12 percent. The aim should be to achieve the maximum impermeability compatible with good compaction.

Table No.5.2.3

BS Sieve Size	Percentage passing
2 inch	100
1 1/2 inch	95 - 100
3/4 inch	60 - 80
3/8 inch	40 - 60
3/16 inch	25 - 40
No. 7	15 - 30
No. 25	8 - 22
No. 200	5 - 12

Brick Edging

While laying the top layer of the base course a 3" wide and 9" deep brick edging shall be laid over 1" of sand cushion with close joints and sand grouted. The top of these bricks after rolling shall be in line with the finished profile of the base course. The brick layer shall be rolled simultaneously with the final layer of base course after completion of the shoulders.

BITUMINOUS SURFACE TREATMENT OR SURFACE DRESSING

Description

This work shall consist of furnishing and applying Bituminous material of the type specified with cover material of specified sizes.

Materials

Bituminous material will be of the type and grade as specified taking into consideration the climatic conditions and the intensity of traffic.

Materials Aggregate

The aggregate shall be of the specified nominal size in conformity with the grading given in table given below:-

Table 5.2.3

Grading specifications for single sized chippings

Nominal size inch	Specified size			Oversize		Undersize				Maximum Permissible Flakiness Index
	Passing Sieve	Retained Sieve	Min. Proportion of specified size	All to Pass Sieve	Max.of Nominal size Retained on sieve	Passing Sieve	Max. Proportion of under size	Pass-ing sieve	Max. Fines	
Inch	Inch	Inch	%	Inch	%	Inch	%		%	
3/4	3/4	1/2	65	1	15	3/8	7	No.8	2	35
1/2	1/2	3/8	55	3/4	15	1/4	7	No.8	2	35
3/8	3/8	1/4	60	1/2	15	No.4	10	No.8	2	35
1/4	1/4	1/8	70	3/8	15	No.8	10	No.30	2	35

Source : Punjab Highway Department--"Standard Specifications for Road and Bridge Construction". 1971 Edition.

Crushed gravel or crushed stone shall consist of clean tough, durable fragments free from dirt or other objectionable matter, and shall have a percentage wear not greater than 40 at 500 revolutions as determined by AASHO T-96 (Los Angeles Abrasion Test).

CONSTRUCTION

Weather and Seasonal Limitations:

Bituminous material shall be applied only when the surface to be treated is dry or slightly damp and drying when the atmospheric temperature in the shade is above 55 ^{o}F and rising, or above 60 ^{o}F if falling, and it shall not be applied in rain or a dust storm.

Preparation of the Surface for Treatment

The surface shall be cleaned of all loose dust and deleterious material using a mechanical broom and /or mechanical blower. Hand brooms may be used if sufficient labour is available.

Table 5.2.4

RATES OF APPLICATIONS OF MATERIALS FOR BITUMINOUS SURFACE TREATMENT

Surface Treatment		Aggregate		Bituminous Material
Type	Application	Nominal Size Inches	Cubic Feet 100 sq.ft.	Lbs./100 sq.ft.
Triple	Initial	1" to 1.5"	4.0	35
Surface	Second	1/2" to 1/4"	2.0	18
Treatment	Third	1/4" to 1/16"	1.5	14

ASTM - D 1369-58

Source : Punjab Highway Department.---"Standard Specifications for Road and Bridge Construction" 1971 Edition.

APPLICATION OF BITUMINOUS MATERIAL

The bituminous material shall be applied through a distributor at a rate in general conformity with the above table. Successive width of spray shall overlap by an appropriate amount to give an even rate of spread over the joint.

Spreading the Cover Aggregate

The cover aggregate for each layer of bitumen shall be spread within 5 minutes of the application of bitumen. The rate of spread will be sufficient to give complete coverage of the base course and in general conformity with the quantity given in the table above.

Rolling

Rolling may be done by self-propelled pneumatic tyred roller (minimum weight 3/4 ton per wheel with 40 p.s.i. tyre pressure) or 6-12 ton wheel rollers. Rolling should not be continued when the chippings show sign of crushing. After 24 hours, or a longer period if necessary, the surplus aggregate shall be removed by brushing and the subsequent layers applied as specified in the same manner. Detailed specifications may be referred to in sections 301-1 to 301-9, 311-1 to 311-6, 401-1 to 411-13, 421-1 to 421-5, 501-1 to 501-6, 551-1 to 551-6, 552-1 to 552-6, 601-1 to 601-7, 612-1 to 612-7 of "Standard Specifications For Road and Bridge

Construction of Punjab Highway Department Edition September 1971".

Road Structures

The materials and specifications for the construction of road structures such as bridges and culverts shall be as per "Standard Specification For Road and Bridge Construction, Edition September 1971 of Punjab Highway Department.

A.A.S.H.O. SPECIFICATIONS FOR MATERIALS FOR EMBANKMENTS AND SUB-GRADES

1. Materials for Embankments and Sub-grades - Materials shall be free from detrimental quantities of organic materials, such as leaves roots and sewage :-

2. Materials obtained from cuts or borrow areas shall conform to the following requirements:

a) In embankments - Materials classified in the A-1, A-2-4, A-2-5 or A-3 groups shall be used when available and shall be compacted to at least 95 percent of the Modified A.A.S.H.O. Density Materials classified in the A-2-6, A-2-7, A-4, A-5, A-6 or A-7 groups may be used when special attention is given to compaction during construction to obtain in excess of 95 percent of Modified A.A.S.H.O. Density.

b) In subgrade-Materials classified in the A-1, A-2-4, A-2-5 or A-3 groups shall be used when available

and shall be compacted to 100 percent of the Modified A.A.S.H.O.Density. Materials in the A-2-6, A-2-7, A-4, A-5, A-6 or A-7 groups may be used if compacted to not less than 95 percent of the Modofied A.A.S.H.O. Density at optimum moisture content.

c) Local granular and other materials may be used in embankment or subgrade construction if the condition of existing pavements and embankments indicates satisfactory results. Appropriate special specifications shall be prepared for such materials by the engineer.

DESCRIPTION OF CLASSIFICATION GROUPS

a) Granular Materials - containing 35 percent or less passing the No.200 sieve.

Group A-1 - The typical material of this group is a well-graded mixture of stone fragments or gravel, course sand and a non-plastic or feebly plastic soil binder. However, this group includes also stone fragment, gravel, coarse sand, volcanic cinders, etc. without soil binder.

Sub-Group A-1-a includes those materials consisting predominantly of stone fragments or gravel, either with or without a well-graded binder of fine material.

Sub-Group A-1 - includes those materials consisting predominantly of coarse sand either with or without a

well-graded soil binder.

Group A-3 - The typical material of this group is fine beach sand or fine desert blow sand without silty or clay fines or with a very small amount of non-plastic silt. The group includes also stream-deposited mixture of poorly graded fine sand limited amounts of coarse sand and gravel.

Group A-2 - This group includes a wide variety of "granular" materials which are border-line between the material falling in Groups A-1 and A-3 and the silt-clay materials of Groups A-4, A-5, A-6, and A-7. It includes all materials containing 35 percent or less passing the No.200 sieve which cannot be classified as A-1 or A-3, due to fines content or plasticity or both, in excess of the limitations for those groups.

Sub-groups A-2-4 and A-2-5 include various granular materials containing 35 percent or less passing the No. 200 sieve and with a minus No.40 portion having the characteristics of the A-4 and A-5 groups. These groups include such materials as gravel and coarse sand with silt contents or plasticity indexes in excess of the limitations of Group A-1, and fine sand with non-plastic silt content in excess of the limitations of Group A-3.

Sub-groups A-2-6 and A-2-7 include materials similar to those described under sub-groups A-2-4 and A-2-5 except

that the fine portion contains plastic clay having the characteristics of the A-6 or A-7 group. The approximate combined effects of plasticity indexes in excess of 10 and percentage passing the No.200 sieve in excess of 15 is reflected by group index values of 0 to 4.

b) Silt-clay materials - containing more than 35 percent passing the No. 200 sieve.

Group A-4 - The typical material of this group is a non-plastic or moderately plastic silty soil usually having 75 percent or more passing the No. 200 sieve. The group includes also mixture of fine silty soil and up to 64 percent of sand and gravel retained on No.200 sieve. The group index values range from 1 to 8, with increasing percentage of coarse material being reflected by decreasing group index values.

Group A-5 - The typical material of this group is similar to that described under Group A-4, except that it is usually of diatomaceous or micaceous character and may be highly elastic as indicated by the high liquid limit. The group index values range from 1 to 12, with increasing values indicating the combined effect to increasing liquid limits and decreasing percentages of coarse material.

Group A-6 - The typical material of this group is a plastic clay soil usually having 75 percent or more passing the No.200 sieve The group includes also

mixtures of fine clayey soil and up to 64 percent of sand and gravel retained on the No.200 sieve. Materials of the group usually have high volume change between wet and dry states. The group index values range from 1 to 16, with increasing plasticity indexes and decreasing percentages of coarse material.

Group A-7 - The typical material of this group is similar to that described under Group A-6, except that it has the high liquid limits characteristic of the A-5 group and may be elastic as well as subject to high volume change. The range of group index values is 1 to 20, with increasing values indicating the combined effect of increasing liquid limits and plasticity index and decreasing percentage of coarse material.

Sub-Group A-7-6 includes those materials with high plasticity indexes in relation to liquid limits and which are subject to extremely high volume change.

PUNJAB

TYPICAL CROSS SECTION FOR METALLING OF BANK OF MAIN CANAL.

FIG:1

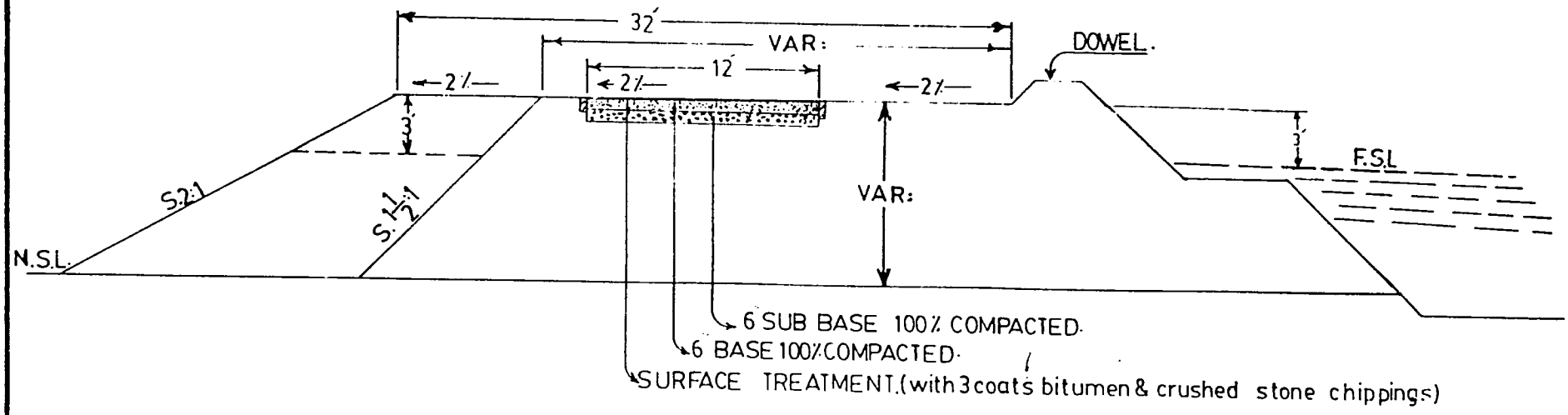

TYPICAL CROSS SECTION FOR METALLING OF BRANCH CANAL.

FIG2

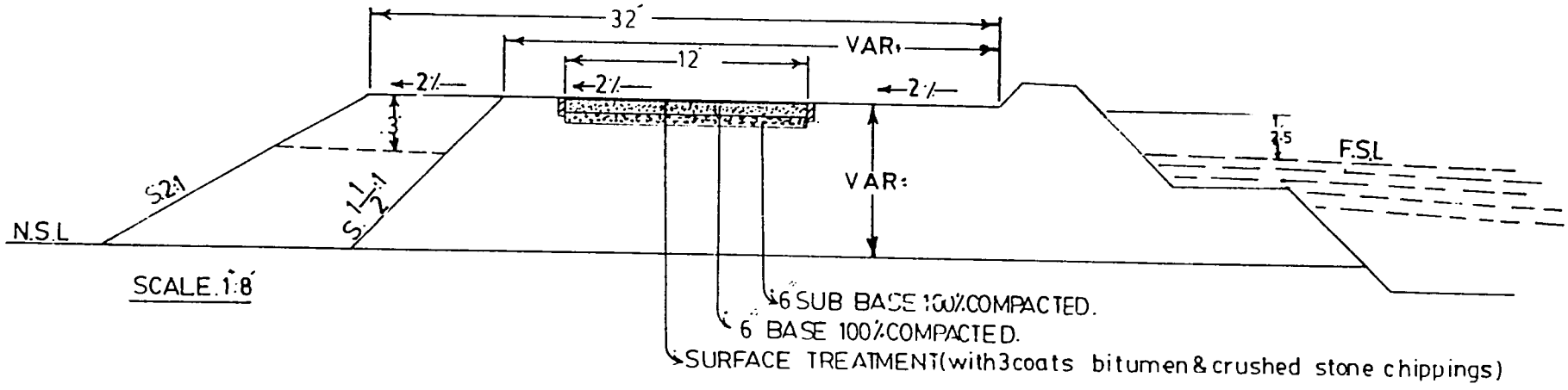

SCALE. 1:8'

362

PUNJAB

TYPICAL CROSS SECTION FOR METALLING OF BANK OF DISTRIBUTORY/MINOR.

FIG:3

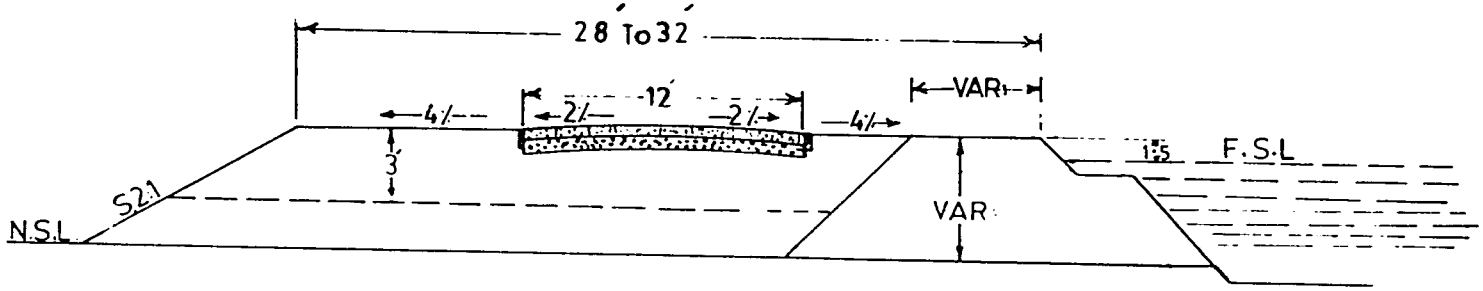

TYPICAL CROSS SECTION FOR METALLING OF BANK OF DRAIN.

FIG:4

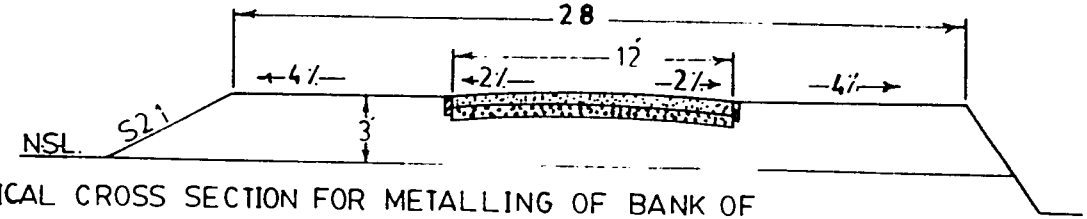

TYPICAL CROSS SECTION FOR METALLING OF BANK OF OTHER LINK.

FIG:5

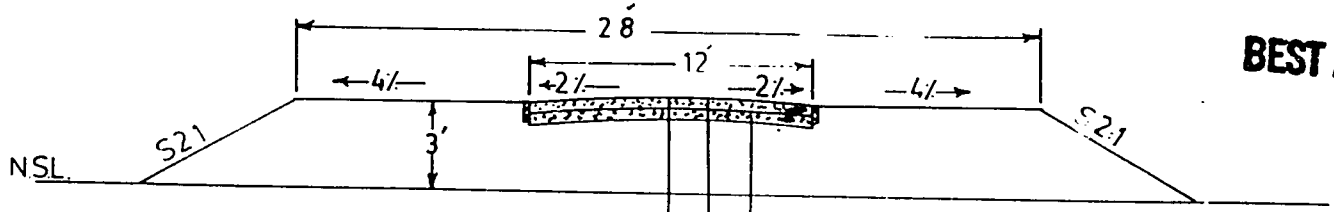

SCALE 1" : 8'

6" SUB BASE 100% COMPACTED

6" BASE 100% COMPACTED

SURFACE TREATMENT (with 3 coats of bitumen & crushed stone chippings)

BEST AVAILABLE DOCUMENT

N.W.F.P

TYPICAL CROSS SECTION FOR METALLING OF BANK OF MAIN CANAL/BRANCH.

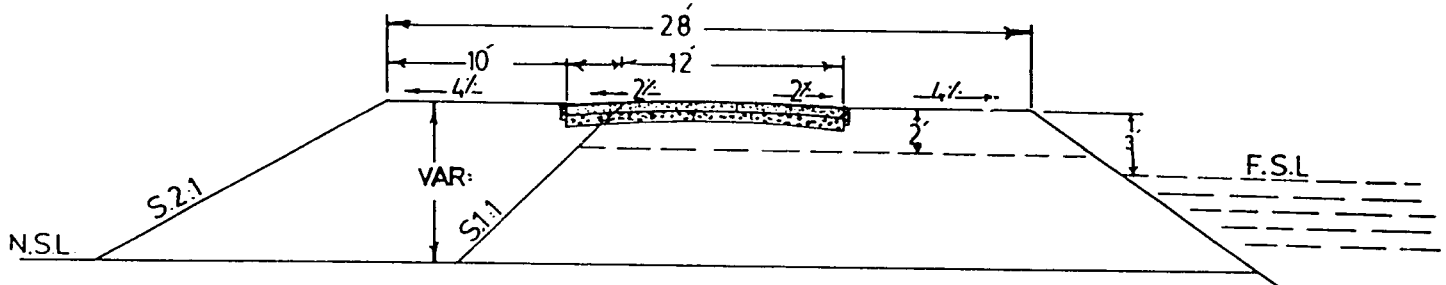

Fig : 6

TYPICAL CROSS SECTION FOR METALLING OF BANK OF DISTRIBUTORY/MINOR.

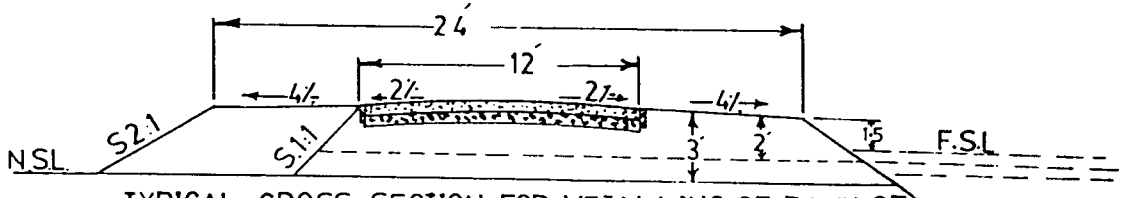

Fig : 7

TYPICAL CROSS SECTION FOR METALLING OF BANK OF OTHER LINK.

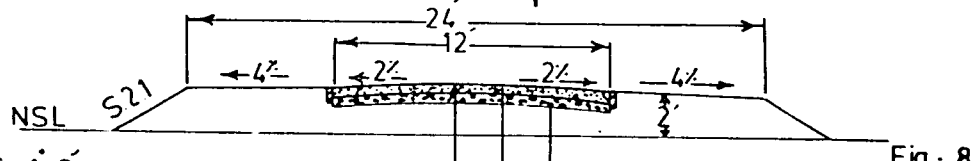

SCALE . 1" : 8'

Fig : 8

6" SUB BASE 100% COMPACTED

6" BASE 100% COMPACTED

SURFACE TREATMENT (with 3 coat of bitumen & crushed stone chippings)

364

SIND.

TYPICAL CROSS SECTION FOR METALLING OF BANK OF MAIN CANAL.

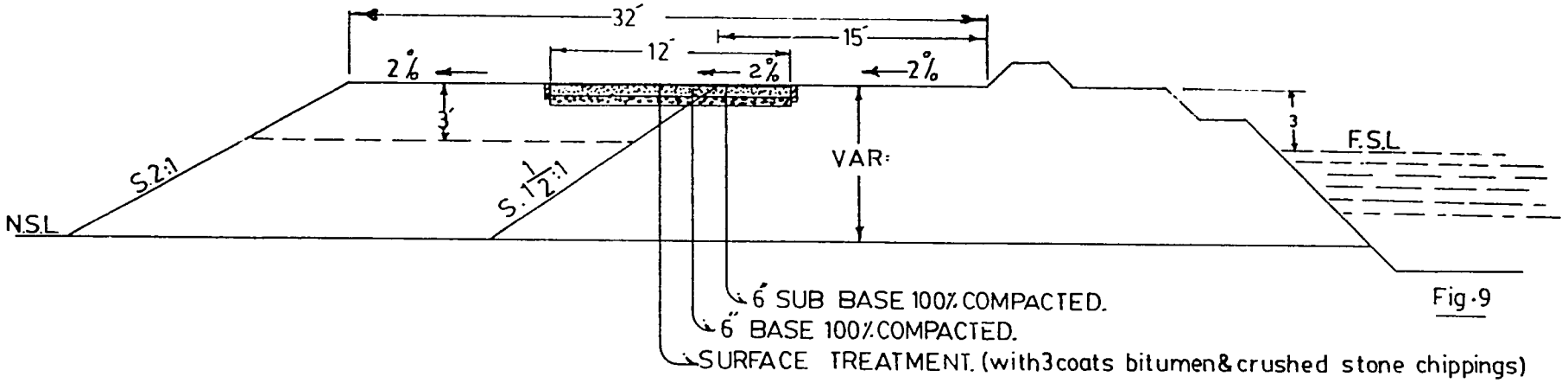

Fig-9

TYPICAL CROSS SECTION FOR METALLING OF BANK OF BRANCH CANAL.

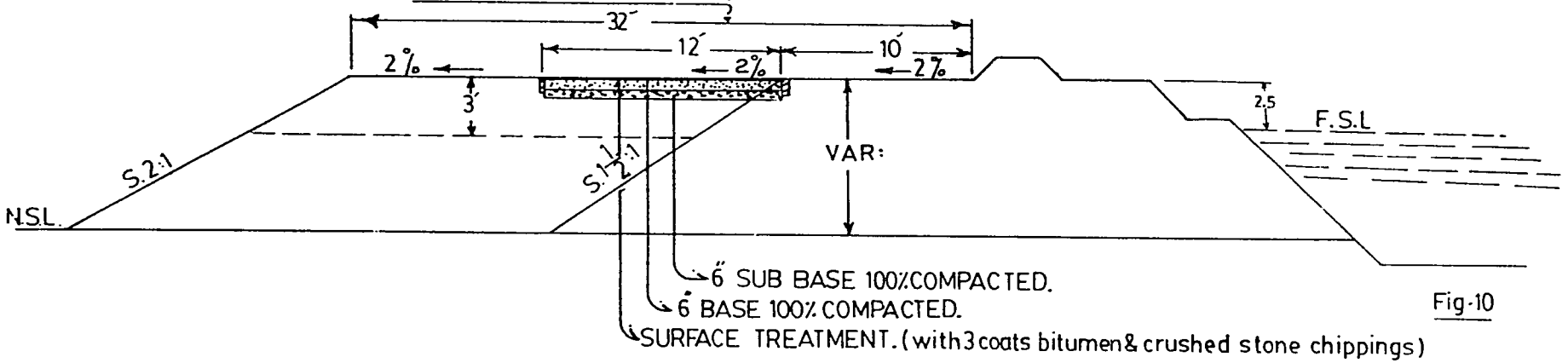

Fig-10

SCALE 1":8'

365

SIND.

TYPICAL CROSS SECTION FOR METALLING OF BANK OF DISTRIBUTORY/ MINOR.

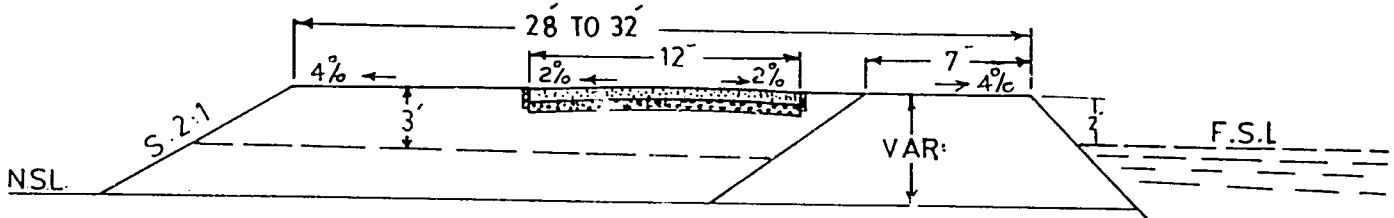

Fig :11

TYPICAL CROSS SECTION FOR METALLING OF BANK OF DRAIN.

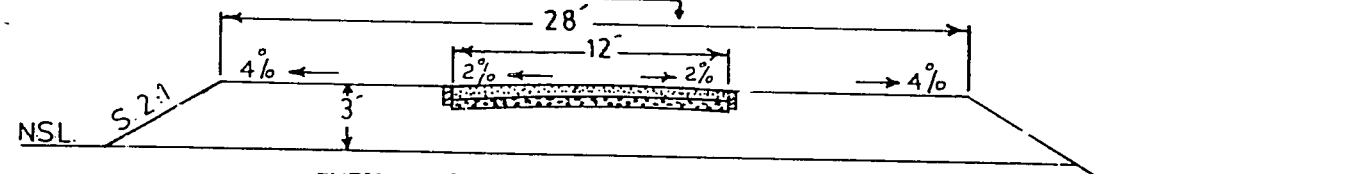

Fig :12

TYPICAL CROSS SECTION FOR METALLING OF OTHER LINK.

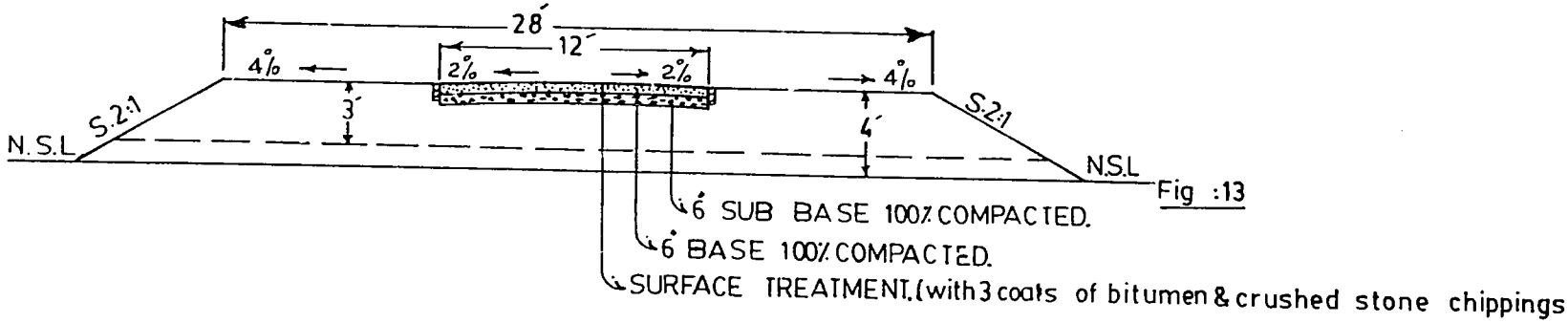

Fig :13

SCALE .1":8'

APPENDIX 5.3

ESTIMATE FOR A FOOT BRIDGE

Abstract of Cost

1.	E/Work excavation in foundation	2070.76 cft @ 124/05 %. cft	=	257/-
2.	P.C.C. I:3:6 in foundation	584.00 cft @ 858/50 % cft	=	5014/-
3.	B.masonary 1:3	814.15 cft @ 869/20 % cft	=	7077/-
4.	R.C.C. I:2:4	52.14 cft @ 21/05 per cft	=	1098/-
5.	Reinforcement	3.7 cwt @ 550/- per cwt	=	2035/-
6.	Iron Girder 5"x9"x14.5'	58 rft @ 80/- per rft	=	4640/-
7.	Wearing coat PCC 1:2:4	19.38 cft @ 1306/20 % cft	=	253/-
8.	Angle iron 2.5" x 2.5"x 3/8"	135.2 rft @ 50/- per rft.	=	6760/-
9.	Flat iron 2.5"x1/4"	144 rft @ 40/- per rft.	=	5760/-
10.	Painting of Girder and railing	511 sft @ 72/30 % sft	=	370/-
		Total		33264/-
	Add 100% premium on item No. 1			257/-
	Add 75% Premium on item No. 2,3,4,5,6,7,8,9,10		=	24755/-
		Total		58276/-
	Add 5% contigency and petty establishment.			2914/-
		Total		61190/-
		Say	=	62000/-
	Cost for 30 ft. long Foot bridge		=	62000/-
	Cost for 1 ft. long Foot Bridge		=	2067/-
	Cost for 40 ft long Foot Bridge		=	82667/-
		Say	=	83000/-
	Escalated cost		=	17000/-
		Total	=	100000/-

BEST AVAILABLE DOCUMENT

APPENDIX 5.3

ESTIMATE FOR A FOOT BRIDGE

Abstract of Quantity

1. E/Work in excavation foundation ;

I - Abuttment	=	2 x 8.5 x 5.2 x 3.49	=	308.52 cft.
II Pier	=	1 x 8.9 x 4.0 x 3.49	=	124.24 cft.
III W/Walls	=	4 x 10.0 x 4.2 x 9.75	=	1638.00 cft.
		Total	=	2070.76 cft.

2. P.C.C. I:3:6 in foundation

I Abutt.	=	2 x 8.5 x 5.2 x 2	=	176.8 cft.
II Pier	=	1 x 8.9 x 4.0 x 2	=	71.2 cft.
III W/Walls	=	4 x 10.0 x 4.2 x 2	=	336.0 cft.
		Total	=	584.0 cft.

3. Brick Massonary 1:3

I Abutt.	Ist step	= 2x6.3x3.45x1	=	43.47 cft.
	2nd step	= 2x6.3x3.10x1	=	39.06 cft.
	3rd step	= 2x6.3x2.7x1	=	34.02 cft.
	4th step	= 2x6.3x2.3x1	=	28.98 cft.
	5th step	= 2x6.3x1.9x1.75	=	41.89 cft.
	6th step	= 2x6.3x1.5x0.58	=	10.96 cft.
II -Pier	Ist step	= 1x7.9x3.1x0.50	=	12.24 cft.
	2nd step	= 1x7.1x2.3x0.50	=	8.16 cft.
	3rd step	= 1x6.3x1.5x5.33	=	50.37 cft.
III W/Walls	Ist step	= 4x10.0x2.7x1	=	108.00 cft.
	2nd step	= 4x10.0x2.3x1	=	92.00 cft.
	3rd step	= 4x10.0x1.9x1.75	=	133.00 cft.
		Total	=	814.15 cft.

BEST AVAILABLE DOCUMENT

APPENDIX 5.3

ESTIMATE FOR A FOOT BRIDGE

Abstract of Quantity

4. R.C.C. 1:2:4

Bed Plate Abutt	= 2x4.0x1.5x0.5	= 6.0 cft.
	= 2x4.0x0.75x0.92	= 5.52 cft.
Pier	= 1x4.0x1.5x0.5	= 3.00 cft.
Slab	= 1x28.5x4.0x0.33	= 37.62 cft.
		52.14 cft.

5. Reinforcement for Bed Plate and Slab

$$= \frac{52.14 \times 7.85}{112} = 3.7 \text{ cwt.}$$

6. Iron Girder 5"x 9" x 14.5' = 2x2 = 4 Nos.

or 4x14.5 = 58 Rft.

7. Wearing coat PCC 1:2:4 = 1x28.5x4x0.17 = 19.38 cft.

8. Angle Iron 2.5" x 2.5" x 3/8

= 3.92 x 5 x 2	= 39.2 Rft.
= 3 x 4 x 2	= 24 Rft.
= 2 x 36	= 72 Rft.
	135.2 Rft.

9. Flate Iron 2.5" x 2.5" = 4 x 36 = 144 Rft.

10. Painting of Griders and Railing

= 2 - 1 - 2/3x145x5/6x135

= 2x5/12x144 =

= 338.33x112.67x60.00 = 511 Sft.

BEST AVAILABLE DOCUMENT

FOOT BRIDGE

PLAN

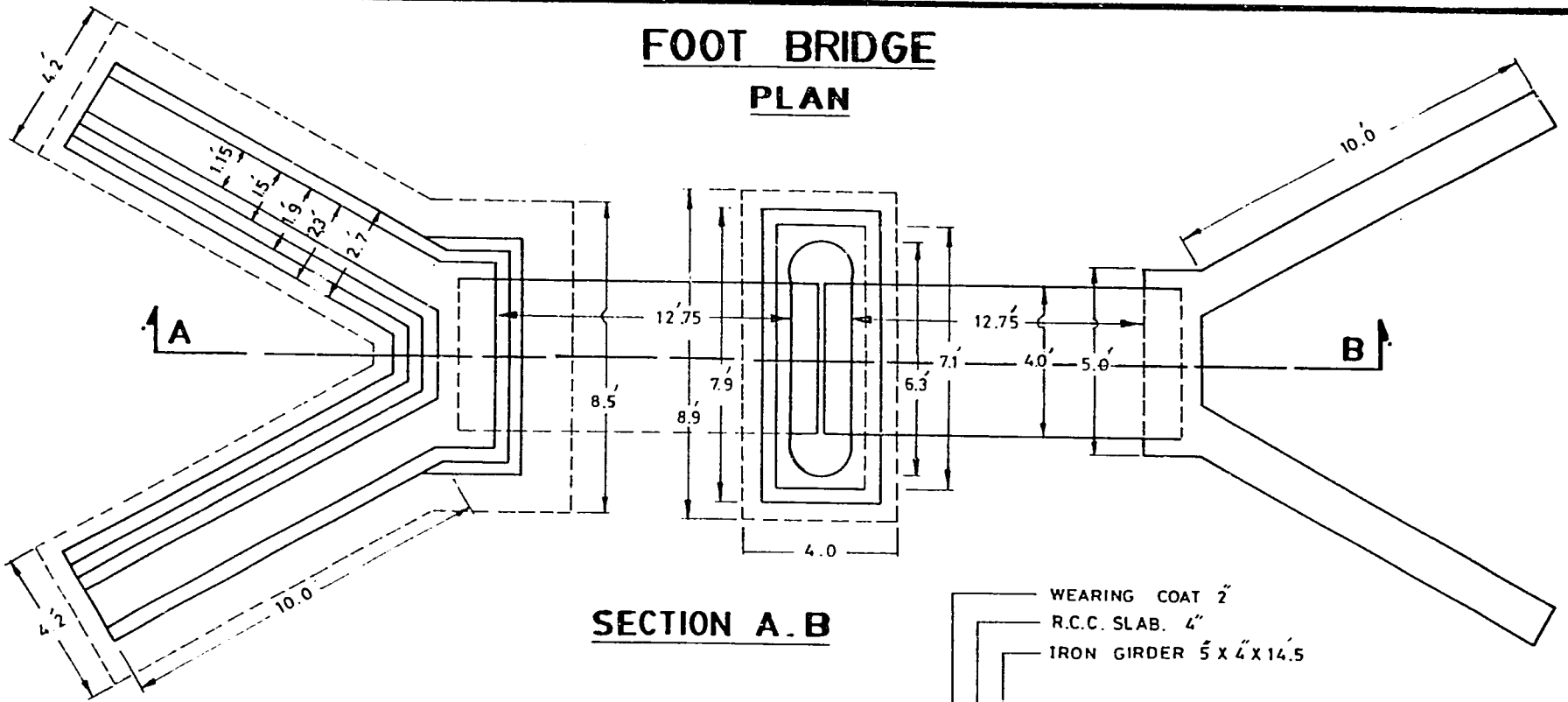

SECTION A.B

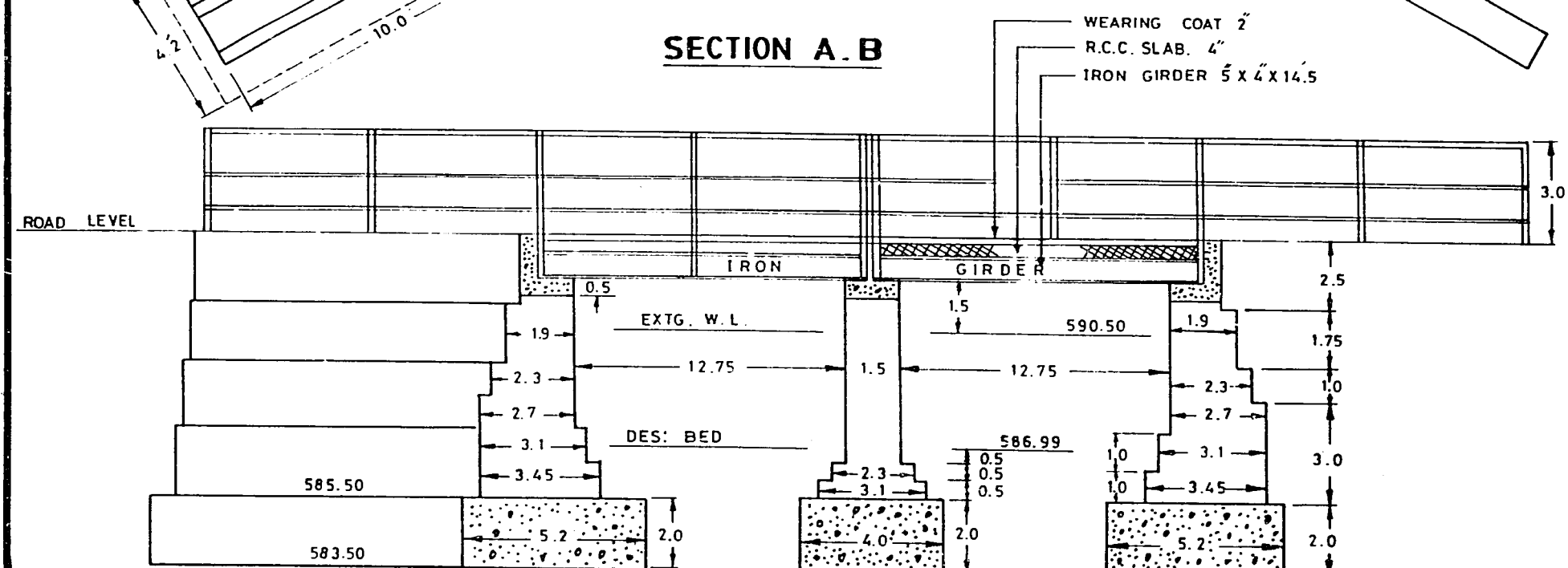

370

APPENDIX 5.3 A

PUNJAB

Detail of Foot Bridges.

CANAL SYSTEM	ROAD NO.	NAME OF CHANNEL	R.D.	TOTAL
Jhang Branch	2.2	Jhang Branch + Khewra Distry.	12.5, 17, 23,	3
	2.3	Bhangu Branch	13.5, 22.2, 38.5, 45.35, 51.2	5
	2.4	Dhaular Distry +	7.5, 13, 20.3, 24.9, + RD 21.5, 8.7, 18.2, 21, 31, 34.6.	10
	2.5	Nasrana Distry.	15, 45, 50, 55, 70.	5
	2.6	Dhaular Distry.	142.25, 161.2, 168.5	3
	2.7	Bhawana Branch + Feeder Distry. + Maghani Distry.	63, 80	2
	2.8	Dhaular Distry.	191, 198.3, 208.1	3
	2.9	Khewra Distry.	67, 69, 76, 78, 80, 99, 106, 108, 120	9
			Total	40

Total Cost = 40 x 100,000 = Rs. 4,000,000

BEST AVAILABLE DOCUMENT

APPENDIX 5.3 A

PUNJAB

Detail of Foot Bridges.

CANAL SYSTEM	ROAD NO.	NAME OF CHANNEL	R.D.	TOTAL
DEPALPUR CANAL	4.1	Link channel + Depalpur Canal	180.95, 199.317 226.743, 232.352	4
	4.2	Balloki Sulemanki Link		2
	4.3	Attari Distry.	58	1
	4.4	Chorkot Distry.		2
	4.5	Pakhoki Distry.		2
	4.6	Bunga Hayat Disty.		2
	4.7	Pakpattan Canal		2
	4.8	Nehranwala Distry.		1
	4.9	Kanganpur Distry.		2
	4.10	Depalpur Distry.		2
			Total	20
Total Cost = 20 x 100,000 = Rs.			2,000,000	

Note :- On road Nos. 4.2 and 4.4 to 4.10 RDs not available.

BEST AVAILABLE DOCUMENT

372

APPENDIX 5.3 A

PUNJAB

Detail of Foot Bridges.

CANAL SYSTEM	ROAD NO.	NAME OF CHANNEL	R.D.	TOTAL
Gogera Branch	3.3	Burala Branch.	186	1
	3.4	Tarkhani Distry + Sarwala Minor.		5
	3.5	Mungi Distry.	49.3, 45.9, 25.3, 13.6	4
	3.7	Kabirwala Distry + Hetor Minor	38.5, 42, 50.5 61.25, 65.4,+RD 4.2, 7.1, 8.5.	8
	3.10	Burala Branch.	422.5, 431.4, 435.	3
			Total	21

Total Cost = 21 x 100,000 = Rs. 2,100,000

BEST AVAILABLE DOCUMENT

373

APPENDIX 5.3 A

PUNJAB

Detail of Foot Bridges.

CANAL SYSTEM	ROAD NO.	NAME OF CHANNEL	R.D.	TOTAL
Mailsi Canal	5.1	Mailsi Canal + Chitdain Branch + Bahishti Disty + Patti Minor.		
	I	Bahishti Disty +	9.883, 106.978, 113.870, 128.964.	4
	II	Patti Minor.	2.953	1
	5.2	Gopal Distry.	26.908, 41.675, 46.3, 65.659, 71.209, 75.491 87.945, 93.523, 98.118 105.337, 109.932, 114.69.	12
	5.3	Mailsi Canal + Hari Distry.		
	I	Hari Distry.	8.117, 33.471, 41.019, 47.254, 51.192, 59.067 71.537, 86.961.	8
	5.5	Mahmood Distry.	61, 65.65, 103.8, 131.5, 140.5, 142.4, 144.5, 158.	8
			Total	33

Total Cost = 33 x 100,000 = Rs. 3,300,000

BEST AVAILABLE DOCUMENT

374

APPENDIX 5.3 A

SIND

Detail of Foot Bridges.

CANAL SYSTEM	ROAD NO.	NAME OF CHANNEL	R.D.	TOTAL
1 Ghotki Feeder	1.1	Maki Wah Branch	60, 72	2
	1.3	Masu Wah Branch	83	1
	1.4	Dingro Wah Minor	5,52,63	3
			Total	6
2 Rohri Canal	2.1	Bhogri Minor	2, 12, 19	3
	2.8	Jamalshah Distry.	10, 22, 65, 71	4
	2.10	Thul Branch	8, 18, 25.	3
			Total	10
3A Jamrao Canal		Dalore Minor	6, 33	2
		Patoyoon Minor	40	1
		Puran Distry.	75,110	2
			Total	5
4. Nasir Canal		Nasir Main Canal	295, 324, 354	3
		Bhuro Branch	15, 20	2
		Dilpur Branch	5, 10, 18, 20	4
			Total	9
5. Dadu Canal		Piarogoth Distry.	67	1
		Kakar Disty.	26, 72	2
		Pahore Minor	27	1
		Dadu	375, 521	2
			Total	6
			Total	36

Total Cost = 36 x 100,000 = Rs. 3,600,000

BEST AVAILABLE DOCUMENT

APPENDIX 5.3 A

N.W.F.P

Detail of Foot Bridges.

CANAL SYSTEM	ROAD NO.	NAME OF CHANNEL	R.D.	TOTAL
Kabul River Canal	12.3	Warsik Gravity Canal	177.5, 178.5, 182, 176.	4.
			Total	4
Total Cost =	4	x 100,000 = Rs.	400,000	

BEST AVAILABLE DOCUMENT

APPENDIX 5.4

ESITMATES FOR SEMI PERMANENT BUFFALO GHAT

Abstract of Cost

1.	Earth work making embankment upto 100' lead, lift 8' 95% compacted = 16116 cft @ 171/40 %. cft	=	2762/-
2.	P.C.C 1:3:6 in toe = 1750 cft @ 858/50 % cft	=	15024/-
	Total	=	17786/-
	Add 100 % premium on item No. 1	=	2762/-
	Add 70 % premium on item No. 2	=	11268/-
	Total	=	31816/-
	Add 5 % contingency & petty establishment	=	1591/-
	Total	=	33407/-
	Say	=	34000/-
	Cost for both sides of channel	=	34000/-
	Cost for one side of channel = $\frac{34000}{2}$	=	17000/-

BEST AVAILABLE DOCUMENT

377

APPENDIX 5.4

ESITMATES FOR SEMI PERMANENT BUFFALO GHAT

Abstract of Quantity

1. Earth work making embankment
   upto 100' lead, lift 8' 95% compacted

I	2 x .5 x 2.5 x 50	=	625 cft.
II	2 x 22.13 x 7 x 50	=	15491 cft.
	Total	=	16116 cft.

2. P.C.C 1:3:6 in toe

I	2 x 2 x 5 x 50	=	1000 cft.
II	2 x .5 . 3 x 5 x 50	=	750 cft.
	Total	=	1750 cft.

BEST AVAILABLE DOCUMENT

APPENDIX 5.4

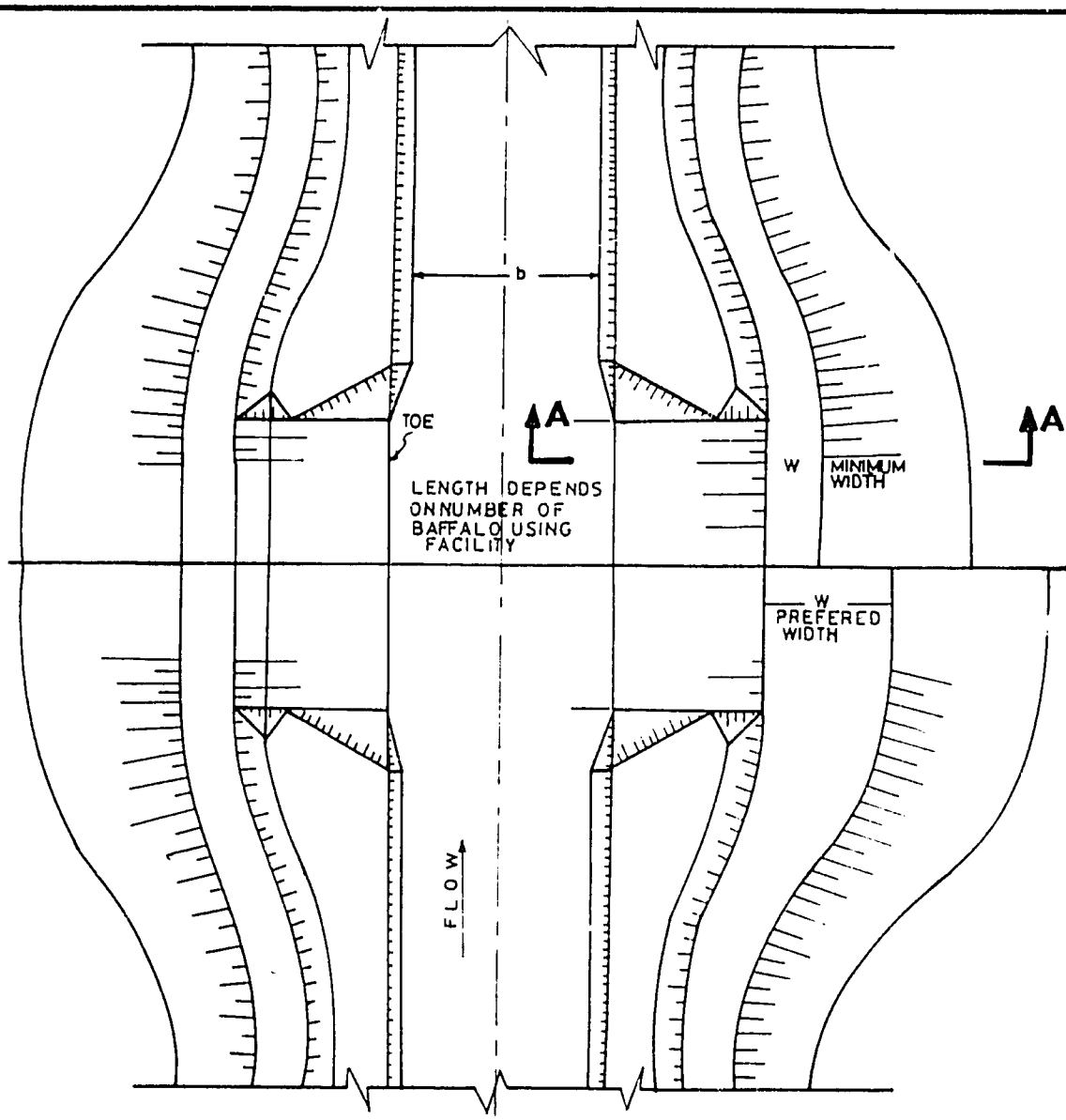

PLAN

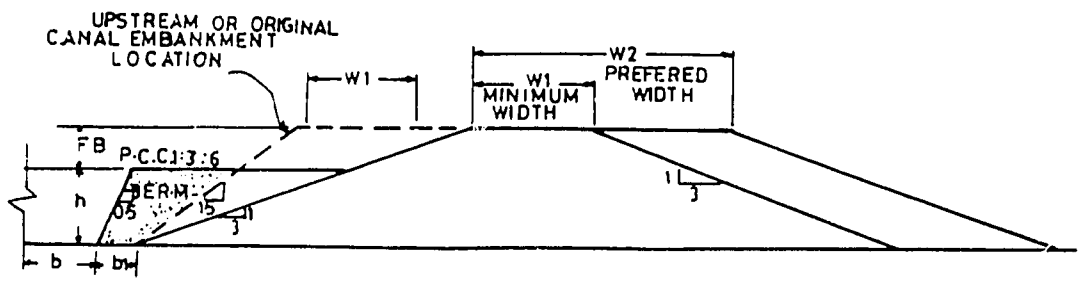

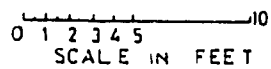

SECTION. A. A

SEMI PERMANENT BUFFALO GHAT

APPENDIX 5.5

ESITMATES FOR A PERMANENT BUFFALO GHAT

Abstract of Quantity

1. E/Work in excavation	=	2567.87	cft.	@ 124.05%o	cft.=	319.00
2. P.C.C. 1:4:8	=	626.52	cft.	@ 717.30%	cft. =	4494.00
3. P.C.C. 1:3:6	=	1705.19	cft.	@ 858.50%	cft. =	14639.00
4. Brick Masonary 1:6	=	1831.57	cft.	@ 716.90%	cft. =	13131.00
5. Metalling (Concrete paving)	=	924	cft.	@ 858.50%	cft. =	7933.00
6. Dry Brick pitching	=	462	cft.	@ 476.75%	cft. =	2203.00
7. Dry Brick Ballast	=	245	cft.	@ 239%	cft. =	586.00
				Total	=	43305.00
Add 100% premium on item No.1					=	319.00
Add 75% premium on item 2 to 7					=	32240.00
				Total	=	75864.00
Add 5% ccontigency & petty establishment					=	3793.00
				Total	=	79657.00
				Say	=	80000.00
Cost for 100 ft. long Bufalo Ghat					=	80000.00
Cost for 1 ft. long Buffalo Ghat					=	800.00
Cost for 50 ft. long Buffalo Ghat					=	40000.00
				Say	=	40000.00
Cost for 50 ft. long Buffalo Ghat on one side of channel					=	40000.00
Cost for 50 ft. long Buffalo Ghat on both sides of channel					=	80000.00

BEST AVAILABLE DOCUMENT

APPENDIX 5.5

ESITMATES FOR A PERMANENT BUFFALO GHAT

Abstract of Quantity

1. E/Work excavation in foundation ;

I.	6.0 x 2.15 x 3.8 x 2	=	98.04 cft.
II.	6.0 x 2.15 x 3.8 x 2	=	98.04 cft.
III.	6.0 x 2.15 x 3.8 x 2	=	98.04 cft.
IV.	20.0 x 4.25 x 2.25 x 2	=	382.50 cft.
V.	35.0 x 2.0 x 1.5 x 2	=	210.00 cft.
VI.	100 x 2.0 x 2.5 x 1	=	500.00 cft.
VII.	100 x 1.5 x 1.5 x 1	=	225.00 cft.
VIII.	100 x 4.25 x 2.25 x 1	=	956.25 cft.
	Total	=	2567.87 cft.

2. P.C.C. 1:4:8 in foundation;

I.	6 x 2.15 x 0.75 x 2	=	19.35 cft.
II.	6 x 2.15 x 0.75 x 2	=	19.35 cft.
III.	6 x 2.15 x 0.40 x 2	=	10.32 cft.
IV.	20 x 4.25 x 0.50 x 2	=	85.00 cft.
V.	35 x 2.0 x 0.50 x 2	=	70.00 cft.
VI.	100 x 1.5 x 0.40 x 1	=	60.00 cft.
VII.	100 x 2.0 x 2.75 x 1	=	150.00 cft.
VIII.	100 x 4.25 x 0.50 x 1	=	212.50 cft.
	Total	=	626.52 cft.

3. P.C.C.I:3:6 in Toe Wall.

I.	100 x 1.0 x 1.0 x 1	=	100.00 cft.
II.	100 x 21.0 x 0.75 x 1	=	1575.00 cft.
III.	35 x 1.15 x 0.75 x .5 x 2	=	30.19 cft.
	Total	=	1705.19 cft.

4. B. Masonary 1:6

	I.	$6.0 \times 1.15 \times \frac{2.29 + 1.23}{2} \times 6$	=	72.86 cft.
	II.	100 x 21.0 x 0.25 x 1	=	525.00 cft.
	III.	100 x 0.25 x 0.12 x 9	=	27.00 cft.
	IV.	20 x 1.15 x 4.75 x 2	=	218.50 cft.
	V.	100 x 1.15 x 1.75 x 1	=	201.25 cft.
W/Walls	VI.	$1.15 \times 3.0 \times \frac{(3+3.70)}{2} \times 8$	=	92.46 cft.
	VII.	$1.75 \times 1.15 \times \frac{3.17+3.25}{2} \times 2$	=	12.92 cft.

BEST AVAILABLE DOCUMENT

VIII.	3.25 x 3.5 x .5 x 2 x 1.15 =	13.08 cft.
XI.	35 x 1.15 x 7 x 2 =	563.5 cft.
X.	35 x 1.5 x 1 x 2 =	105.0 cft.
	Total =	1831.57 cft.

5.	Mettaling	= 140 x 11 x 0.60 =	924.00 cft.
		Total =	924.00 cft.
6.	D.B.Pitching	= 20 x 7 x 1.65 x 2 =	462.00 cft.
		Total =	462.00 cft.
7.	D.B.Ballast	= 35 x 7.0 x 0.5 x 2 =	245.00 cft.
		Total =	245.00 cft.

BEST AVAILABLE DOCUMENT

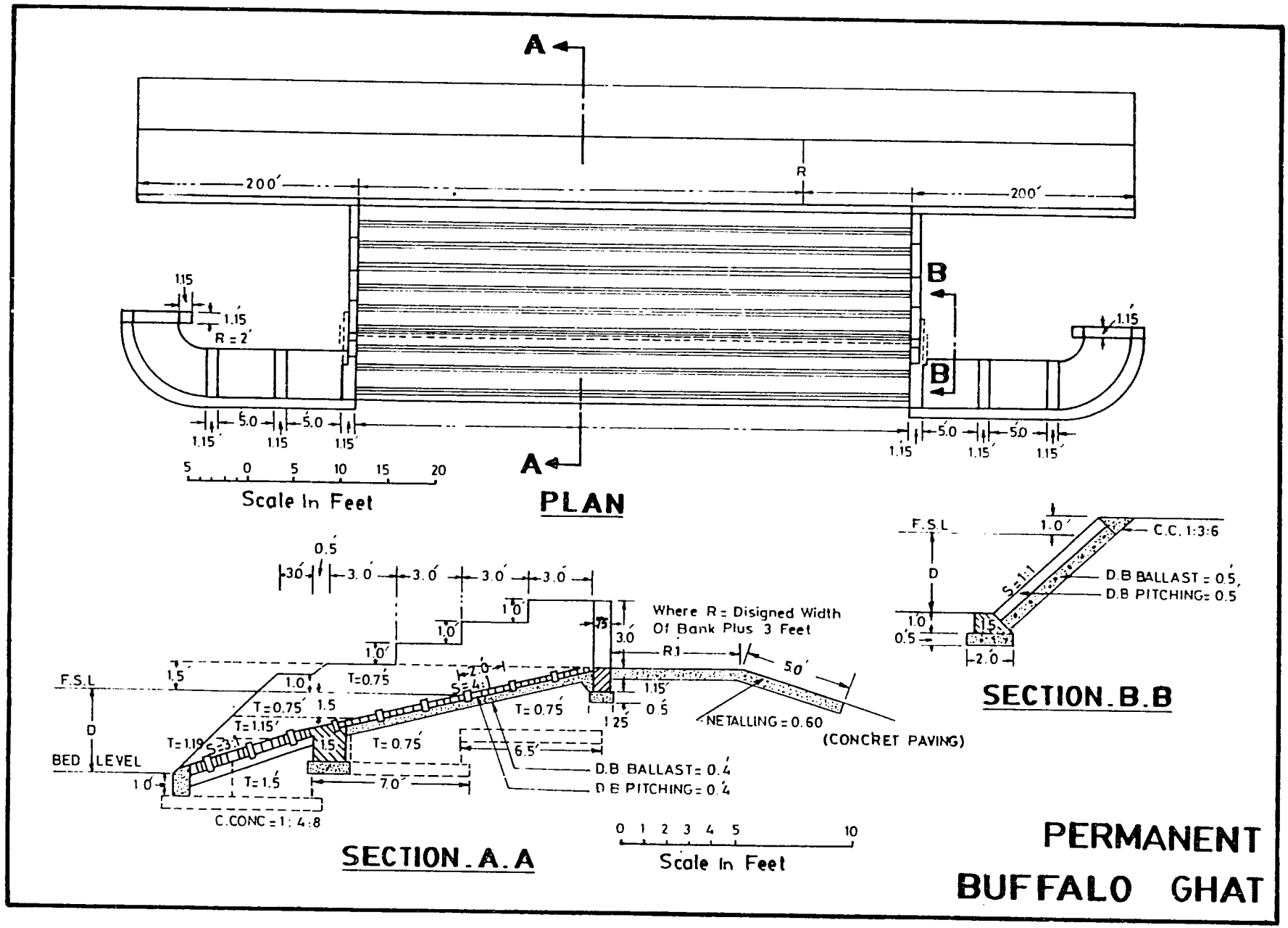
A
200'
R
200'
B
B
1.15
1.15
R = 2'
1.15
5.0
5.0
1.15
1.15
1.15
5.0
5.0
1.15
1.15
1.15
A
5 0 5 10 15 20
Scale In Feet
PLAN
0.5
3.0
3.0
3.0
3.0
3.0
1.0
1.0
1.0
Where R = Disigned Width
Of Bank Plus 3 Feet
3.0
R1
50'
F.S.L
1.5
1.0
T=0.75
2.0
S=4:1
T=0.75
1.5
T=1.15'
T=0.75
1.15
0.5
1.25
NETALLING = 0.60
(CONCRET PAVING)
D
BED LEVEL
T=1.19
S=3:1
1.5
T=0.75
6.5'
D.B BALLAST = 0.4'
D.B PITCHING = 0.4'
1.0
T=1.5
7.0
C.CONC = 1 : 4 : 8
SECTION. A. A
0 1 2 3 4 5 10
Scale In Feet
F.S.L
1.0'
C.C. 1:3:6
D
S=1:1
D.B BALLAST = 0.5'
D.B PITCHING = 0.5'
1.0
0.5
1.5
2.0
SECTION. B. B
PERMANENT
BUFFALO GHAT

343

APPENDIX 5.6

PUNJAB

Detail of Buffalo Ghats

CANAL SYSTEM	ROAD NO.	NAME OF CHANNEL	PERMANENT	SEMI PERMANENT
Jhang Branch	2.4	Dhaular Distry + Dasrana Distry.	RD 1.5, 20.5 + RD 2.1, 11.7, 20.5.	RD 13.45, 24.5 + RD 5, 16.6, 29.3.
	2.5	Nasrana Distry.	RD 3.3, 45.5,54.4	RD 15.1, 49.8,70.3
	2.6	Dhaular Distry.	RD 142, 162.25, 168.8.	RD 156.5, 167
	2.7	Bhawana Branch + Feeder Distry. + Maghani Distry.	RD 51.7 +RD- 80.7 +RD 62.8	RD 56.5
	2.8	Dhaular Distry. Qaim Minor.	RD 198.5+RD-10.45	RD 205, +RD 15.5
	2.9	Khewra Distry.	RD 72,105, 117.2	RD 81, 108, 120
		Total	19	16

I.	Cost for permanent Buffalo Ghat on one side = 14 x 40000	= Rs.	560,000.00
II.	Cost for permanent Buffalo Ghat on both side = 5 x 80000	= Rs.	400,000.00
III	Cost for Semi permanent Buffalo Ghat on one side = 12 x 17000	= Rs.	204,000.00
IV	Cost for Semi permanent Buffalo Ghat on both side = 4 x 34000	= Rs.	136,000.00
	Total	= Rs.	1,300,000.00

BEST AVAILABLE DOCUMENT

APPENDIX 5.6

PUNJAB

Detail of Buffalo Ghats

CANAL SYSTEM	ROAD NO.	NAME OF CHANNEL	PERMANENT	SEMI PERMANENT
Gogera Branch	3.1	Lower Gogera Br.	RD 171	
	3.2	Tandlianwala Disty + Bahlak Branch.	RD 10	RD 7
	3.4	Tarkani Disty + Sarwala Minor	3 Nos.	3 Nos.
	3.5	Mungi Disty	RD 50.6, 12.3	RD 45.5
	3.7	Kabirwala Disty+ Hotar Minor	RD 39, 50,65,+ RD 4, 8	RD 41.5, 60, + RD 6.5
		Total	12	8

I.	Cost for permanent Buffalo Ghat on one side = 9 x 40000	= Rs.	360,000.00
II.	Cost for permanent Buffalo Ghat on both side = 3 x 80000	= Rs.	240,000.00
III	Cost for Semi permanent Buffalo Ghat on one side = 5 x 17000	= Rs.	102,000.00
IV	Cost for Semi permanent Buffalo Ghat on both side = 2 x 34000	= Rs.	68,000.00
	Total	= Rs.	770,000.00

Note : On road No. 3.4 RD not available.

BEST AVAILABLE DOCUMENT

APPENDIX 5.6

PUNJAB

Detail of Buffalo Ghats

CANAL SYSTEM	ROAD NO.	NAME OF CHANNEL	PERMANENT	SEMI PERMANENT
Depalpur Canal	4.1	Link Channel + Depalpur Canal	RD 26.7, 48.8, 83.3,141,192.5	RD 40.70,126.7, 165.6, 208.5.
	4.2	Balloki Sulemanki Link.	1	1
	4.3	Attari Distry.	1	1
	4.4	Chorkot Distry.	Between RD 29-30, 70-71	Between RD 53-54,79-80
	4.5	Pakhoki Distry Hotar Minor	1	1
	4.6	Bunga Hayat Disty	1	1
	4.7	Pakpattan Canal	1	1
	4.8	Nehranwala disty.	1	1
	4.9	Kanganpur Disty.	1	1
	4.10	Depalpur Disty.	1	1
		Total	15	15

I.	Cost for permanent Buffalo Ghat on one side = 11 x 40000	= Rs.	440,000.00
II.	Cost for permanent Buffalo Ghat on both side = 4 x 80000	= Rs.	320,000.00
III	Cost for Semi permanent Buffalo Ghat on one side = 11 x 17000	= Rs.	187,000.00
IV	Cost for Semi permanent Buffalo Ghat on both side = 4 x 34000	= Rs.	136,000.00
	Total	= Rs.	1,083,000.00

Note : On road Nos. 4.2 to 4.10 RDs not available.

BEST AVAILABLE DOCUMENT

APPENDIX 5.6

PUNJAB

Detail of Buffalo Ghats

CANAL SYSTEM	ROAD NO.	NAME OF CHANNEL	PERMANENT	SEMI PERMANENT
Mailsi Canal	5.1	Chitdain Branch+ Bahishti Disty.	RD 61.573,78.308, +RD 20.017,50.535, 65.63,106.978, 128.964	RD 72.073,+ RD 38.065, 57.427, 77.772,112.228.
	5.2	Gopal Disty.	RD 5.906,36.425, 46.598,86.632 108.619.	RD 13.454, 42.660, 62.349, 102.056 114.690
	5.3	Hari Disty.	RD 17.063,37.408, 64.645.	RD 19.361, 49.878, 86.632.
	5.5	Mahmood Disty.	RD 61.5,90,127.3, 154.	RD 80, 104.5, 140
		Total	19	16

I.	Cost for permanent Buffalo Ghat on one side = 14 x 40000	= Rs.	560,000.00
II.	Cost for permanent Buffalo Ghat on both side = 5 x 80000	= Rs.	400,000.00
III	Cost for Semi permanent Buffalo Ghat on one side = 12 x 17000	= Rs.	204,000.00
IV	Cost for Semi permanent Buffalo Ghat on both side = 4 x 34000	= Rs.	136,000.00
	Total	= Rs.	1,300,000.00

BEST AVAILABLE DOCUMENT

APPENDIX 5.6

SIND

Detail of Buffalo Ghats

CANAL SYSTEM	ROAD NO.	NAME OF CHANNEL	PERMANENT	SEMI PERMANENT
Ghotki Feeder	1.1	Maki Wah Branch	RD 64, 83	RD 67
	1.2	Masu Wah Branch	RD 83	RD 90
	1.3	Masu Wah Branch	RD 35, 55	RD 46
	1.4	Dingro Wah Minor	RD 45, 78, 100	RD 62, 92
	1.7	Bumbli Wah Minor	RD 16, 151, 101, 101.	RD 21, 75
	1.8	Ghotki Feeder Canal	RD 200, 240	RD 221
	1.9	Bundh Minor	RD 30, 48	RD 38
	1.11	Bakro Minor	RD 1	RD 10
	1.12	Masu wah Branch	RD 108, 130	RD 120
		Total	20	13

I.	Cost for permanent Buffalo Ghat on one side = 15 x 40000	= Rs.	600,000.00
II.	Cost for permanent Buffalo Ghat on both side = 5 x 80000	= Rs.	400,000.00
III	Cost for Semi permanent Buffalo Ghat on one side = 10 x 17000	= Rs.	170,000.00
IV	Cost for Semi permanent Buffalo Ghat on both side = 3 x 34000	= Rs.	102,000.00
	Total	= Rs.	1,272,000.00

BEST AVAILABLE DOCUMENT

388

APPENDIX 5.6

SIND

Detail of Buffalo Ghats

CANAL SYSTEM	ROAD NO.	NAME OF CHANNEL	PERMANENT	SEMI PERMANENT
Rohri Canal	2.6	Sangi Disty.	RD 40, 74	RD 60
	2.7	Sangi Disty.	RD 90	RD 105
	2.8	Jamalshah Disty.	RD 5, 63	RD 18, 70.
	2.10	Thal Branch	RD 5, 25	RD 15, 33
		Total	7	6

I.	Cost for permanent Buffalo Ghat on one side = 5 x 40000	= Rs.	200,000.00
II.	Cost for permanent Buffalo Ghat on both side = 2 x 80000	= Rs.	160,000.00
III	Cost for Semi permanent Buffalo Ghat on one side = 4 x 17000	= Rs.	68,000.00
IV	Cost for Semi permanent Buffalo Ghat on both side = 2 x 34000	= Rs.	68,000.00
	Total	= Rs.	496,000.00

BEST AVAILABLE DOCUMENT

APPENDIX 5.6

SIND

Detail of Buffalo Ghats

CANAL SYSTEM	ROAD NO.	NAME OF CHANNEL	PERMANENT	SEMI PERMANENT
Jamrao Canal	3.1	Dalore Disty.	RD 6, 33, 46	RD 20, 38
	3.2	Patoyoon Disty.	RD 32, 65	RD 48
	3.4	Jamrao main Canal	RD 15, 35	RD 27, 55
	3.5	Jamrao main Canal	RD 86, 106	RD 95, 118
	3.6	Jamrao main Canal	RD 202	RD 211
	3.7	Puran Disty.	RD 5	RD 17
	3.8	Jamrao main Canal	RD 378, 405	RD 390
	3.10	Jamrao main Canal	RD 505, 560, 610	RD 530, 580
	3.11	Puran Disty.	RD 50, 91	RD 70, 115
		Total	18	14

I.	Cost for permanent Buffalo Ghat on one side = 13 x 40000	= Rs.	520,000.00
II.	Cost for permanent Buffalo Ghat on both side = 5 x 80000	= Rs.	400,000.00
III	Cost for Semi permanent Buffalo Ghat on one side = 10 x 17000	= Rs.	170,000.00
IV	Cost for Semi permanent Bufflo Ghat on both side = 4 x 34000	= Rs.	136,000.00
	Total	= Rs.	1,226,000.00

390

APPENDIX 5.6

SIND

Detail of Buffalo Ghats

CANAL SYSTEM	ROAD NO.	NAME OF CHANNEL	PERMANENT	SEMI PERMANENT
Mithrao Canal	3.4	Mithrao Main Canal	RD 360, 400	RD 385
	3.5	Naukor Branch	RD 20, 70	RD 40, 95
		Total	4	3

I.	Cost for permanent Buffalo Ghat on one side = 3 x 40000	= Rs.	120,000.00
II.	Cost for permanent Buffalo Ghat on both side = 1 x 80000	= Rs.	80,000.00
III	Cost for Semi permanent Buffalo Ghat on one side = 2 x 17000	= Rs.	34,000.00
IV	Cost for Semi permanent Buffalo Ghat on both side = 1 x 34000	= Rs.	34,000.00
	Total	= Rs.	268,000.00

APPENDIX 5.6

SIND

Detail of Buffalo Ghats

CANAL SYSTEM	ROAD NO.	NAME OF CHANNEL	PERMANENT	SEMI PERMANENT
Nasir Canal	4.1	Nasir Main Canal	RD 295	RD 314
	4.4	Khoski Branch	RD 330, 5, 18	RD 345, 11, 23
	4.2	Bhuro Branch	RD 5, 18	RD 10, 26
	4.5	Dilpur Branch	RD 5, 18	RD 10, 20
		Total	8	8

I.	Cost for permanent Buffalo Ghat on one side = 6 x 40000	= Rs.	240,000.00
II.	Cost for permanent Buffalo Ghat on both side = 2 x 80000	= Rs.	160,000.00
III	Cost for Semi permanent Buffalo Ghat on one side = 6 x 17000	= Rs.	102,000.00
IV	Cost for Semi permanent Buffalo Ghat on both side = 2 x 34000	= Rs.	68,000.00
	Total	= Rs.	570,000.00

Dadu Canal	5.1	Piarogoth Disty.	RD 58, 78	RD 68
	5.2	Kakar Disty.	RD 2, 30	RD 11
	5.3	Pahore Minor	RD 2, 20	RD 12, 40
	5.4	Lakha Minor	RD 15, 32	RD 23
	5.7	Dadu Main Canal	RD 495, 555	RD 527, 600
		Total		

I.	Cost for permanent Buffalo Ghat on one side = 7 x 40000	= Rs.	280,000.00
II.	Cost for permanent Buffalo Ghat on both side = 3 x 80000	= Rs.	240,000.00
III	Cost for Semi permanent Buffalo Ghat on one side = 5 x 17000	= Rs.	85,000.00
IV	Cost for Semi permanent Buffalo Ghat on both side = 2 x 34000	= Rs.	68,000.00
	Total	= Rs.	673,000.00

APPENDIX 5.6

N.W.F.P

Detail of Buffalo Ghats

CANAL SYSTEM	ROAD NO.	NAME OF CHANNEL	PERMANENT	SEMI PERMANENT
Upper Swat Canal	15.2	Machai Branch	RD 66.5	-
	15.8	Maira Branch	RD 81,92	-
		Total	3	

I. Cost for permanent Buffalo Ghat on both side = 3 x 80000 = Rs. 240,000.00

Total = Rs. 240,000.00

APPENDIX 6.1

PUNJAB

Abstract of Cost Estimate

JHANG BRANCH SYSTEM

Number of Roads	10
Total Length	123 Miles
Total Cost	148 Million Rs.

394

APPENDIX 6.1

PUNJAB

Jhang Branch System

A) Analysis of rate for subbase course of stone aggregate 100% compacted

Unit % cft.

1.	C.S.R.	Rs. 230.30
2	Subsequent carriage average lead 75-3 = 72 miles from Sikhanwali quarry to site of work	Rs. 155.05
		Rs. 385.35 % cft.

B) Analysis of rate for basecourse of crushed stone bound macadam 100% compacted

Unit % cft

1.	C.S.R.	Rs, 312.45
2.	Subsequent carriage average lead 75-3 = 72 miles from Sikhanwali quarry to site of work	Rs. 155.05
		Rs. 467.50 % cft.

C) Analysis of rate for tripple surface treatment using 67 Lbs Bitumen and 7.5 cft. agregate

Unit % cft.

1.	C.S.R.	Rs. 105.95
2.	Subsequent carriage of 7.5 cft agregate average lead 75-3 = 72 miles from Sikhanwali quarry to site of work	Rs. 11.36
		Total Rs. 117.58 %cft.

395

APPENDIX 6.1

PUNJAB

Estimates for Canal Roads

Irrigation System . Jhang Branch

Analysis of rate for 1 mile Length

S.NO	Description	Quantity	Rate Rs.	Unit	Amount Per mile.
1.	Surveys	1 mile	2500	P.M.	2500
2.	Providing & laying sub-base course of crushed stone 6" thick 100 % compacted.	32314 cft.	385/35	% cft.	124522
3.	Providing & laying base-course of crushed stone 6" thick 100 % compacted.	32314 cft.	467/50	% cft.	151068
4.	Tripple surface treatment using 67 lbs bitumen and 7.5 cft. aggregate % sft.	64627 sft.	117/58	% sft.	75988
5.	Providing and laying brick on edge 3" wide 9" deep.	10560 rft.	1/15	P.rft.	12144
6.	Providing and fixing of K.M stones, direction boards & caution boards etc.	1 mile	4220	P.M.	4220
7.	Making and maintaining diversions.	1 mile	8471	P.M.	8471
8.	Extra cost for bitumen.	19.33 Ton	1150	P.Ton	22230

BEST AVAILABLE DOCUMENT

APPENDIX 6.1

PUNJAB

Estimates for Canal Roads

Irrigation System . Jhang Branch

Analysis of Quantities for 1 mile Length

S.NO	Description	Quantity
1.	Surveys	1 mile
2.	Providing & laying sub-base course of crushed stone 6" thick 100 % compacted. = 5280 x 12 x 1/2	31680 cft.
	Add 2 % for curve widening	634
	Total	32314 cft.
3.	Providing & laying base- course of crushed stone 6" thick 100 % compacted. = 5280 x 12 x 1/2	31680 cft.
	Add 2 % for curve widening	634
	Total	32314 cft.
4.	Tripple surface treatment using 67 lbs bitumen and 7.5 cft. aggregate % sft. = 5280 x 12	63360 sft.
	Add 2 % for curve widening	1267
	Total	64627 sft.
5.	Providing & laying brick on edge 3" wide 9" deep. = 5280 x 2	10560 sft.
6.	Providing and fixing of K.M. stones, direction boards & caution boards etc.	1 mile
7.	Making and maintaining diversions.	1 mile
8.	Extra cost for bitumen.	19.33

BEST AVAILABLE DOCUMENT

APPENDIX 6.1

PUNJAB

Estimates for Canal Roads

Irrigation System Jhang Branch

Channel Jhang Branch

Road No. 2.1

Length from R.D. 160460 to R.D. 308426 = 147966 ft = 28.00 mile

ABSTRACT OF COST

S.NO	Description	Quantity	Rate Rs.	Unit	Amount Rs.
1.	Surveys	28.00 mile	2500	P.M.	70000
2.	Making embankment lead 500' lift 8' 85% compacted	7985608 cft	185/35	%. cft.	1480132
3.	Making embankment lead 500' lift 8' 95% compacted	7000441 cft	203/60	%. cft.	1425290
4.	Regular excavation i/c refilling with excavated material 95 % compacted	6436521 cft	166/80	% cft.	1073612
5.	Providing & laying sub-base course of crushed stone 6" thick 100% compacted.	28.00 mile	124522	P.M.	3486616
6.	Providing & laying base course of crushed stone 6" thick 100% compacted.	28.00 mile	151068	P.M.	4229904
7.	Tripple surface treatment using 67 lbs. bitumen & 7.5 cft. aggregate % sft.	28.00 mile	75988	P.M.	2127664
8.	Providing & laying brick on edge, 3" wide 9" deep.	28.00 mile	12144	P.M.	340032

BEST AVAILABLE DOCUMENT

398

S.NO	Description	Quantity	Rate Rs.	Unit	Amount Rs.
9.	Providing and fixing of K.M stones, direction boards, caution boards etc.	28.00 mile	4220	P.M.	118160
10.	Making and maintaining diversion	28.00 mile	8471	P.M.	237188
11.	Remodelling of masonary structures				
	1. Outlets	1 No.	25000	P.No.	25000
	2. H.Regulators	7 No.	250000	P.No.	1750000
12.	Land acquisition	-Acres		P.A.	
	Add 100% premium on item No. 2,3,4				3979034
	Add 75 % premium on item No. 5,6,7,8				7638162
	Add extra cost for 541.3 tonnes bitumen	Ton	1150	P.T.	622495
				Total	28603289
	Add 5% contingency & petty establishment.				1430164
				Total	30033453
				Say	30033453
			Cost Per mile		1072623

BEST AVAILABLE DOCUMENT

399

APPENDIX 6.1

PUNJAB

Estimates for Canal Roads

Irrigation System . Jhang Branch

Channel Jhang Branch + Khewra Disty.

Road No. 2.2

Length from R.D 187000 to R.D. 189300 = 2300 ft = 0.44 mile

Part I
Abstract of Cost of Jhang Branch

S.NO	Description	Quantity	Rate Rs.	Unit	Amount Rs.
1.	Surveys	0.44 mile	2500	P.M.	1100
2.	Making embankment lead 500' lift 8' 85% compacted	158125 cft	185/35	%. cft.	29308
3.	Making embankment lead 500' lift 8' 95% compacted	135700 cft	203/60	%. cft.	27629
4.	Regular excavation i/c refilling with excavated material 95 % compacted	100050 cft	166/80	%. cft.	16688
5.	Providing & laying sub-base course of crushed stone 6" thick 100% compacted.	0.44 mile	124522	P.M.	54790
6.	Providing & laying base course of crushed stone 6" thick 100% compacted.	0.44 mile	151068	P.M.	66470
7.	Tripple surface treatment using 67 lbs. bitumen & 7.5 cft. aggregate % sft.	0.44 mile	75988	P.M.	33435
8.	Providing & laying brick on edge, 3" wide 9" deep.	0.44 mile	12144	P.M.	5343

BEST AVAILABLE DOCUMENT

400

S.NO	Description	Quantity	Rate Rs.	Unit	Amount Rs.
9.	Providing and fixing of K.M stones, direction boards, caution boards etc.	0.44 mile	4220	P.M.	1857
10.	Making and maintaining diversion	0.44 mile	8471	P.M.	3727
11.	Remodelling of masonary structures				
	1. Outlets	0 No.	25000	P.No.	0
	2. H.Regulators	0 No.	250000	P.No.	0
12.	Land acquisition	0 Acres		P.A.	0
	Add 100% premium on item No. 2,3,4				73625
	Add 75 % premium on item No. 5,6,7,8				120028
	Add extra cost for 8.6 tonnes bitumen	Ton	1150	P.T.	9890
				Total	443891
	Add 5% contingency & petty establishment.				22195
8.				Total	466085
				Say	466100
			Cost Per mile		1059318

BEST AVAILABLE DOCUMENT

401

APPENDIX 6.1

PUNJAB

Estimates for Canal Roads

Irrigation System . Jhang Branch

Channel Jhang Branch + Khewra Disty.

Road No, 2.2

Length from R.D. 000 to R.D. 30000 = 5.68 mile

Part II
Abstract of Cost of Khewra Disty.

S.NO	Description	Quantity	Rate Rs.	Unit	Amount Rs.
1.	Surveys	5.68 mile	2500	P.M.	14200
2.	Making embankment lead 500' lift 8' 85% compacted	4637500 cft	185/35	%. cft.	859561
3.	Making embankment lead 500' lift 8' 95% compacted	2517250 cft	203/60	%. cft.	512512
4.	Regular excavation i/c refilling with excavated material 95 % compacted	1305000 cft	166/80	%. cft.	217674
5.	Providing & laying sub-base course of crushed stone 6" thick 100% compacted.	5.68 mile	124522	P.M.	707285
6.	Providing & laying base course of crushed stone 6" thick 100% compacted.	5.68 mile	151068	P.M.	858066
7.	Tripple surface treatment using 67 lbs. bitumen & 7.5 cft. aggregate % sft.	5.68 mile	75988	P.M.	431612
8.	Providing & laying brick on edge, 3" wide 9" deep.	5.68 mile	12144	P.M.	68978

BEST AVAILABLE DOCUMENT

102

S.NO	Description	Quantity	Rate Rs.	Unit	Amount Rs.
9.	Providing and fixing of K.M stones, direction boards, caution boards etc.	5.68 mile	4220	P.M.	23970
10.	Making and maintaining diversion	5.68 mile	8471	P.M.	48115
11.	Remodelling of masonary structures				
	1. Outlets	12 No.	25000	P.No.	300000
	2. H.Regulators	2 No.	250000	P.No.	500000
12.	Land acquisition	0 Acres		P.A.	0
	Add 100% premium on item No. 2,3,4				1589747
	Add 75 % premium on item No. 5,6,7,8				1549456
	Add extra cost for 109.8 tonnes bitumen	Ton	1150	P.T.	126270
				Total	7807446
	Add 5% contingency & petty establishment.				390372
				Total	8197818
				Say	8198000
			Cost Per mile		1443310

BEST AVAILABLE DOCUMENT

APPENDIX 6.1

PUNJAB

Estimates for Canal Roads

Irrigation System . Jhang Branch

Channel Bunga Branch

Road No. 2.3

Length from R.D 8936 to R.D. 75635 = 66699 ft. = 12.63 mile

ABSTRACT OF COST

S.NO	Description	Quantity	Rate Rs.	Unit	Amount Rs.
1.	Surveys	12.63 mile	2500	P.M.	31575
2.	Making embankment lead 500' lift 8' 85% compacted	7704130 cft	185/35	%. cft.	1427960
3.	Making embankment lead 500' lift 8' 95% compacted	529466 cft	203/60	%. cft.	107799
4.	Regular, excavation i/c refilling with excavated material 95 % compacted	2901407 cft	166/80	%. cft.	483955
5.	Providing & laying sub-base course of crushed stone 6" thick 100% compacted.	12.63 mile	124522	P.M.	1572713
6.	Providing & laying base course of crushed stone 6" thick 100% compacted.	12.63 mile	151068	P.M.	1907989
7.	Tripple surface treatment using 67 lbs. bitumen & 7.5 cft. aggregate % sft.	12.63 mile	75988	P.M.	959728
8.	Providing & laying brick on edge, 3" wide 9" deep.	12.63 mile	12144	P.M.	153379

BEST AVAILABLE DOCUMENT

S.NO	Description	Quantity	Rate Rs.	Unit	Amount Rs.
9.	Providing and fixing of K.M stones, direction boards, caution boards etc.	12.63 mile	4220	P.M.	53299
10.	Making and maintaining diversion	12.63 mile	8471	P.M.	106989
11.	Remodelling of masonary structures				
	1. Outlets	11 No.	25000	P.No.	275000
	2. H.Regulators	1 No.	250000	P.No.	250000
12.	Land acquisition	- Acres		P.A.	-
	Add 100% premium on item No. 2,3,4				2019714
	Add 75 % premium on item No. 5,6,7,8				3445357
	Add extra cost for 244.2 tonnes bitumen	Ton	1150	P.T.	280830
				Total	13076287
	Add 5% contingency & petty establishment.				653814
				Total	13730101
				Say	13731000
			Cost Per mile		1087173

BEST AVAILABLE DOCUMENT

405

APPENDIX 6.1

PUNJAB

Estimates for Canal Roads

Irrigation System . Jhang Branch

Channel Dhular Disty + Darsana Disty.

Road No. 2.4

Length from R.D. 000 to 29987+000 to R.D.39241=69228 ft.= 13.11 mile

ABSTRACT OF COST

S.NO	Description	Quantity	Rate Rs.	Unit	Amount Rs.
1.	Surveys	13.11 mile	2500	P.M.	32775
2.	Making embankment lead 500' lift 8' 85% compacted	1781679 cft	185/35	%. cft.	330234
3.	Making embankment lead 500' lift 8' 95% compacted	5724012 cft	203/60	%. cft.	1165409
4.	Regular excavation i/c refilling with excavated material 95 % compacted	3011418 cft	166/80	%. cft.	502305
5.	Providing & laying sub-base course of crushed stone 6" thick 100% compacted.	13.11 mile	124522	P.M.	1632483
6.	Providing & laying base course of crushed stone 6" thick 100% compacted.	13.11 mile	151068	P.M.	1980501
7.	Tripple surface treatment using 67 lbs. bitumen & 7.5 cft. aggregate % sft.	13.11 mile	75988	P.M.	996203
8.	Providing & laying brick on edge, 3" wide 9" deep.	13.11 mile	12144	P.M.	159208

BEST AVAILABLE DOCUMENT

406

S.NO	Description	Quantity	Rate Rs.	Unit	Amount Rs.
9.	Providing and fixing of K.M stones, direction boards, caution boards etc.	13.11 mile	4220	P.M.	55324
10.	Making and maintaining diversion	13.11 mile	8471	P.M.	111055
11.	Remodelling of masonary structures				
	1. Outlets	13 No.	25000	P.No.	325000
	2. H.Regulators	3 No.	250000	P.No.	750000
12.	Land acquisition	- Acres		P.A.	-
	Add 100% premium on item No. 2,3,4				1997948
	Add 75 % premium on item No. 5,6,7,8				3576297
	Add extra cost for 253.5 tonnes bitumen	Ton	1150	P.T.	291525
				Total	13906267
	Add 5% contingency & petty establishment.				695313
				Total	14601580
				Say	14602000
			Cost Per mile		1113806

BEST AVAILABLE DOCUMENT

APPENDIX 6.1

PUNJAB

Estimates for Canal Roads

Irrigation System . Jhang Branch

Channel Nasrana Disty.

Road No. 2.5

Length from R.D 000 to R.D. 85500 16.19 mile

ABSTRACT OF COST

S.NO	Description	Quantity	Rate Rs.	Unit	Amount Rs.
1.	Surveys	16.19 mile	2500	P.M.	40475
2.	Making embankment lead 500' lift 8' 85% compacted	2680840 cft	185/35	%. cft.	496894
3.	Making embankment lead 500' lift 8' 95% compacted	7568580 cft	203/60	%. cft.	1540963
4.	Regular excavation i/c refilling with excavated material 95 % compacted	3719250 cft	166/80	%. cft.	620371
5.	Providing & laying sub-base course of crushed stone 6" thick 100% compacted.	16.19 mile	124522	P.M.	2016011
6.	Providing & laying base course of crushed stone 6" thick 100% compacted.	16.19 mile	151068	P.M.	2445791
7.	Tripple surface treatment using 67 lbs. bitumen & 7.5 cft. aggregate % sft.	16.19 mile	75988	P.M.	1230246
8.	Providing & laying brick on edge, 3" wide 9" deep.	16.19 mile	12144	P.M.	196611

BEST AVAILABLE DOCUMENT

408

S.NO	Description	Quantity	Rate Rs.	Unit	Amount Rs.
9.	Providing and fixing of K.M stones, direction boards, caution boards etc.	16.19 mile	4220	P.M.	68322
10.	Making and maintaining diversion	16.19 mile	8471	P.M.	137145
11.	Remodelling of masonary structures				
	1. Outlets	25 No.	25000	P.No.	625000
	2. H.Regulators	1 No.	250000	P.No.	250000
12.	Land acquisition	- Acres		P.A.	-
	Add 100% premium on item No. 2,3,4				2658227
	Add 75 % premium on item No. 5,6,7,8				4416494
	Add extra cost for 307 tonnes bitumen	Ton	1150	P.T.	353050
				Total	17095601
	Add 5% contingency & petty establishment.				854780
				Total	17950381
				Say	17951000
			Cost Per mile		1108771

BEST AVAILABLE DOCUMENT

409

APPENDIX 6.1

PUNJAB

Estimates for Canal Roads

Irrigation System . Jhang Branch

Channel Dhaular Disty.

Road No. 2.6

Length from R.D 131250 to R.D.170800= 39550 ft.= 7.5 mile

ABSTRACT OF COST

S.NO	Description	Quantity	Rate Rs.	Unit	Amount Rs.
1.	Surveys	7.5 mile	2500	P.M.	18750
2.	Making embankment lead 500' lift 8' 85% compacted	5961599 cft	185/35	%. cft.	1104982
3.	Making embankment lead 500' lift 8' 95% compacted	3535531 cft	203/60	%. cft.	719834
4.	Regular excavation i/c refilling with excavated material 95 % compacted	1720425 cft	166/80	%. cft.	286967
5.	Providing & laying sub-base course of crushed stone 6" thick 100% compacted.	7.5 mile	124522	P.M.	933915
6.	Providing & laying base course of crushed stone 6" thick 100% compacted.	7.5 mile	151068	P.M.	1133010
7.	Tripple surface treatment using 67 lbs. bitumen & 7.5 cft. aggregate % sft.	7.5 mile	75988	P.M.	569910
8.	Providing & laying brick on edge, 3" wide 9" deep.	7.5 mile	12144	P.M.	91080

BEST AVAILABLE DOCUMENT

410

S.NO	Description	Quantity	Rate Rs.	Unit	Amount Rs.
9.	Providing and fixing of K.M stones, direction boards, caution boards etc.	7.5 mile	4220	P.M.	31650
10.	Making and maintaining diversion	7.5 mile	8471	P.M.	63533
11.	Remodelling of masonary structures				
	1. Outlets	10 No.	25000	P.No.	250000
	2. H.Regulators	- No.	250000	P.No.	-
12.	Land acquisition	- Acres		P.A.	-
	Add 100% premium on item No. 2,3,4				2111783
	Add 75 % premium on item No. 5,6,7,8				2045936
	Add extra cost for 145 tonnes bitumen	Ton	1150	P.T.	166750
				Total	9528101
	Add 5% contingency & petty establishment.				476405
				Total	10004506
				Say	10005000
			Cost Per mile		1334000

BEST AVAILABLE DOCUMENT

411

APPENDIX 6.1

PUNJAB

Estimates for Canal Roads

Irrigation System . Jhang Branch

Channel Bhowana Branch + Feeder Disty + Maghani Disty.

Road No. 2.7

Length from R.D. 28975 to R.D. 37478 = 8503 ft.= 1.61 mile

Part 1
Abstract Cost of Bhowana Branch

S.NO	Description	Quantity	Rate Rs.	Unit	Amount Rs.
1.	Surveys	1.61 mile	2500	P.M.	4025
2.	Making embankment lead 500' lift 8' 85% compacted	1037366 cft	185/35	%. cft.	192276
3.	Making embankment lead 500' lift 8' 95% compacted	457036 cft	203/60	%. cft.	93053
4.	Regular excavation i/c refilling with excavated material 95 % compacted	369881 cft	166/80	%. cft.	61696
5.	Providing & laying sub-base course of crushed stone 6" thick 100% compacted.	1.61 mile	124522	P.M.	200480
6.	Providing & laying base course of crushed stone 6" thick 100% compacted.	1.61 mile	151068	P.M.	243219
7.	Tripple surface treatment using 67 lbs. bitumen & 7.5 cft. aggregate % sft.	1.61 mile	75988	P.M.	122341
8.	Providing & laying brick on edge, 3" wide 9" deep.	1.61 mile	12144	P.M.	19552

BEST AVAILABLE DOCUMENT

412

S.NO	Description	Quantity	Rate Rs.	Unit	Amount Rs.
9.	Providing and fixing of K.M stones, direction boards, caution boards etc.	1.61 mile	4220	P.M.	6794
10.	Making and maintaining diversion	1.61 mile	8471	P.M.	13638
11.	Remodelling of masonary structures				
	1. Outlets	2 No.	25000	P.No.	50000
	2. H.Regulators	- No.	250000	P.No.	-
12.	Land acquisition	- Acres		P.A.	-
	Add 100% premium on item No. 2,3,4				347024
	Add 75 % premium on item No. 5,6,7,8				439194
	Add extra cost for 31.2 tonnes bitumen	Ton	1150	P.T.	35880
				Total	1829173
	Add 5% contingency & petty establishment.				91459
				Total	1920632
				Say	1921000
			Cost Per mile		1193168

BEST AVAILABLE DOCUMENT

413

APPENDIX 6.1

PUNJAB

Estimates for Canal Roads

Irrigation System . Jhang Branch

Channel Bhowana Branch + Feeder Disty + Maghani Disty.

Road No. 2.7

Length from R.D. 37478 to 87765+000 to.R.D.9600=59887 ft= 11.35 mile

Part II

Abstract of Cost of Feeder Disty + Maghani Disty.

S.NO	Description	Quantity	Rate Rs.	Unit	Amount Rs.
1.	Surveys	11.35 mile	2500	P.M.	28375
2.	Making embankment lead 500' lift 8' 85% compacted	3771024 cft	185/35	%. cft.	698959
3.	Making embankment lead 500' lift 8' 95% compacted	4736730 cft	203/60	%. cft.	964398
4.	Regular excavation i/c refilling with excavated material 95 % compacted	2605085 cft	166/80	%. cft.	434528
5.	Providing & laying sub-base course of crushed stone 6" thick 100% compacted.	11.35 mile	124522	P.M.	1413325
6.	Providing & laying base course of crushed stone 6" thick 100% compacted.	11.35 mile	151068	P.M.	1714622
7.	Tripple surface treatment using 67 lbs. bitumen & 7.5 cft. aggregate % sft.	11.35 mile	75988	P.M.	862464
8.	Providing & laying brick on edge, 3" wide 9" deep.	11.35 mile	12144	P.M.	137834

BEST AVAILABLE DOCUMENT

414

S.NO	Description	Quantity	Rate Rs.	Unit	Amount Rs.
9.	Providing and fixing of K.M stones, direction boards, caution boards etc.	11.35 mile	4220	P.M.	47897
10.	Making and maintaining diversion	11.35 mile	8471	P.M.	96146
11.	Remodelling of masonary structures				
	1. Outlets	12 No.	25000	P.No.	300000
	2. H.Regulators	2 No.	250000	P.No.	500000
12.	Land acquisition	- Acres		P.A.	-
	Add 100% premium on item No. 2,3,4				2097886
	Add 75 % premium on item No. 5,6,7,8				3096184
	Add extra cost for 219.4 tonnes bitumen	Ton	1150	P.T.	252310
				Total	12644928
	Add 5% contingency & petty establishment.				632246
				Total	13277174
				Say	13278000
			Cost Per mile		1169868

BEST AVAILABLE DOCUMENT

415

APPENDIX 6.1

PUNJAB

Estimates for Canal Roads

Irrigation System . Jhang Branch

Channel Dhaular Disty + Qaim Minor

Road No. 2.8

Length from R.D.1878800-209000+000 to.R.D.25450=46650 ft= 8.84 mile

ABSTRACT OF COST

S.NO	Description	Quantity	Rate Rs.	Unit	Amount Rs.
1.	Surveys	8.84 mile	2500	P.M.	22100
2.	Making embankment lead 500' lift 8' 85% compacted	3249850 cft	185/35	%. cft.	602360
3.	Making embankment lead 500' lift 8' 95% compacted	6620980 cft	203/60	%. cft.	1348032
4.	Regular excavation i/c refilling with excavated material 95 % compacted	2029275 cft	166/80	%. cft.	338483
5.	Providing & laying sub-base course of crushed stone 6" thick 100% compacted.	8.84 mile	124522	P.M.	1100774
6.	Providing & laying base course of crushed stone 6" thick 100% compacted.	8.84 mile	151068	P.M.	1335441
7.	Tripple surface treatment using 67 lbs. bitumen & 7.5 cft. aggregate % sft.	8.84 mile	75988	P.M.	671734
8.	Providing & laying brick on edge, 3" wide 9" deep.	8.84 mile	12144	P.M.	107353

BEST AVAILABLE DOCUMENT

416

S.NO	Description	Quantity	Rate Rs.	Unit	Amount Rs.
9.	Providing and fixing of K.M stones, direction boards, caution boards etc.	8.84 mile	4220	P.M.	37305
10.	Making and maintaining diversion	8.84 mile	8471	P.M.	74884
11.	Remodelling of masonary structures				
	1. Outlets	7 No.	25000	P.No.	175000
	2. H.Regulators	- No.	250000	P.No.	-
12.	Land acquisition	- Acres		P.A.	-
	Add 100% premium on item No. 2,3,4				2288875
	Add 75 % premium on item No. 5,6,7,8				2411477
	Add extra cost for 171 tonnes bitumen	Ton	1150	P.T.	196650
				Total	10710467
	Add 5% contingency & petty establishment.				535523
				Total	11245990
				Say	11246000
				Cost Per mile	1272172

BEST AVAILABLE DOCUMENT

417

APPENDIX 6.1

PUNJAB

Estimates for Canal Roads

Irrigation System . Jhang Branch

Channel Khewra Disty + 0.31 mile (1637 ft) Link.

Road No. 2.9

Length from R.D. 56800 to.R.D.121200 = 64400 ft.= 12.20 mile

Part I
Abstract of Cost of Khewra Disty.

S.NO	Description	Quantity	Rate Rs.	Unit	Amount Rs.
1.	Surveys	12.20 mile	2500	P.M.	30500
2.	Making embankment lead 500' lift 8' 85% compacted	6861439 cft	185/35	%. cft.	1271768
3.	Making embankment lead 500' lift 8' 95% compacted	4708900 cft	203/60	%. cft.	958732
4.	Regular excavation i/c refilling with excavated material 95 % compacted	2801400 cft	166/80	%. cft.	467274
5.	Providing & laying sub-base course of crushed stone 6" thick 100% compacted.	12.20 mile	124522	P.M.	1519168
6.	Providing & laying base course of crushed stone 6" thick 100% compacted.	12.20 mile	151068	P.M.	1843030
7.	Tripple surface treatment using 67 lbs. bitumen & 7.5 cft. aggregate % sft.	12.20 mile	75988	P.M.	927054
8.	Providing & laying brick on edge, 3" wide 9" deep.	12.20 mile	12144	P.M.	148157

BEST AVAILABLE DOCUMENT

418

S.NO	Description	Quantity	Rate Rs.	Unit	Amount Rs.
9.	Providing and fixing of K.M stones, direction boards, caution boards etc.	12.20 mile	4220	P.M.	51484
10.	Making and maintaining diversion	12.20 mile	8471	P.M.	103346
11.	Remodelling of masonary structures				
	1. Outlets	15 No.	25000	P.No.	375000
	2. H.Regulators	- No.	250000	P.No.	-
12.	Land acquisition	- Acres		P.A.	-
	Add 100% premium on item No. 2,3,4				2697773
	Add 75 % premium on item No. 5,6,7,8				3328056
	Add extra cost for 236 tonnes bitumen	Ton	1150	P.T.	271400
				Total	13992742
	Add 5% contingency & petty establishment.				699637
				Total	14692379
				Say	14693000
			Cost Per mile		1204344

BEST AVAILABLE DOCUMENT

419

APPENDIX 6.1

PUNJAB

Estimates for Canal Roads

Irrigation System . Jhang Branch

Channel Khewra Disty + 0.31 mile (1637 ft) Link.

Road No. 2.9

Length from R.D. 000 to.R.D. 1637 = 0.31 mile

Part II
ABSTRACT OF COST OF LINK

S.NO	Description	Quantity	Rate Rs.	Unit	Amount Rs.
1.	Surveys	0.31 mile	2500	P.M.	775
2.	Making embankment lead 500' lift 8' 85% compacted	- cft	185/35	%. cft.	-
3.	Making embankment lead 500' lift 8' 95% compacted	161540 cft	203/60	%. cft.	32890
4.	Regular excavation i/c refilling with excavated material 95 % compacted	- cft	166/80	%. cft.	-
5.	Providing & laying sub-base course of crushed stone 6" thick 100% compacted.	0.31 mile	124522	P.M.	38602
6.	Providing & laying base course of crushed stone 6" thick 100% compacted.	0.31 mile	151068	P.M.	46831
7.	Tripple surface treatment using 67 lbs. bitumen & 7.5 cft. aggregate % sft.	0.31 mile	75988	P.M.	23556
8.	Providing & laying brick on edge, 3" wide 9" deep.	0.31 mile	12144	P.M.	3765

BEST AVAILABLE DOCUMENT

420

S.NO	Description	Quantity	Rate Rs.	Unit	Amount Rs.
9.	Providing and fixing of K.M stones, direction boards, caution boards etc.	0.31 mile	4220	P.M.	1308
10.	Making and maintaining diversion	0.31 mile	8471	P.M.	2626
11.	Remodelling of masonary structures				
	1. Outlets	- No.	25000	P.No.	-
	2. H.Regulators	- No.	250000	P.No.	-
12.	Land acquisition	2 Acres	50000	P.A.	100000
	Add 100% premium on item No. 2,3,4				32890
	Add 75 % premium on item No. 5,6,7,8				84566
	Add extra cost for 6 tonnes bitumen	Ton	1150	P.T.	6900
				Total	374709
	Add 5% contingency & petty establishment.				18735
				Total	393444
				Say	394000
			Cost Per mile		1270968

BEST AVAILABLE DOCUMENT

421

APPENDIX 6.1

PUNJAB

Estimates for Canal Roads

Irrigation System . Jhang Branch

Channel Marh Chiniot Drain

Road No. 2.10

Length from R.D. 84910 to.R.D. 16220 = 77910 ft.= 14.76 mile

ABSTRACT OF COST

S.NO	Description	Quantity	Rate Rs.	Unit	Amount Rs.
1.	Surveys	14.76 mile	2500	P.M.	36900
2.	Making embankment lead 500' lift 8' 85% compacted	1546571 cft	185/35	%. cft.	286657
3.	Making embankment lead 500' lift 8' 95% compacted	3051695 cft	203/60	%. cft.	621325
4.	Regular excavation i/c refilling with excavated material 95 % compacted	3389085 cft	166/80	%. cft.	565299
5.	Providing & laying sub-base course of crushed stone 6" thick 100% compacted.	14.76 mile	124522	P.M.	1837945
6.	Providing & laying base course of crushed stone 6" thick 100% compacted.	14.76 mile	151068	P.M.	2229764
7.	Tripple surface treatment using 67 lbs. bitumen & 7.5 cft. aggregate % sft.	14.76 mile	75988	P.M.	1121583
8.	Providing & laying brick on edge, 3" wide 9" deep.	14.76 mile	12144	P.M.	179245

BEST AVAILABLE DOCUMENT

422

S.NO	Description	Quantity	Rate Rs.	Unit	Amount Rs.
9.	Providing and fixing of K.M stones, direction boards, caution boards etc.	14.76 mile	4220	P.M.	62287
10.	Making and maintaining diversion	14.76 mile	8471	P.M.	125032
11.	Remodelling of masonary structures				
	1. Outlets	8 No.	25000	P.No.	200000
	2. H.Regulators	- No.	250000	P.No.	-
	3. Cross drainage	8 No.	35000	P.No.	280000
12.	Land acquisition	-Acres		P.A.	
	Add 100% premium on item No. 2,3,4				1473281
	Add 75 % premium on item No. 5,6,7,8				4026403
	Add extra cost for 280 tonnes bitumen	Ton	1150	P.T.	322000
				Total	13367721
	Add 5% contingency & petty establishment.				668386
				Total	14036107
				Say	14037000
			Cost Per mile		951016

BEST AVAILABLE DOCUMENT

423

APPENDIX 7.1

SUMMARY - PID EQUIPMENT INVENTORY - PUNJAB.SIND,NWFP

(REF. 7.2-4)

CATEGORY	NO.OF MAKES	TOTAL NO.OF UNITS	3 YEARS OR LESS GOOD	4-6 YEARS FAIR	7-10 YEARS POOR/SCRAP	OVER 10 YEARS IN USE SCRAP	NOT IN USE USED FOR PARTS SCRAP
TRUCK CRANE 35 T		4			1	3	
15 T		1	1				
10 T	7	3				3	
5 T		2		1		1	
SIDE BOOM CRANE		3			2	1	
TRUCK - FLAT BED 8 T		4	4				
DUMPER 75 T		1				1	
50 T	6	4			2	2	
10 T		30	24	6			
8 T		18	11			7	4
LOWBED 70 T		2	2				
50 T		5	2			3	
35 T		4	3	1			
20 T		1		1			
LUBE		14	6		8		
FUEL 2500 g.		9	3	6			
WATER 2500 g.		17	13	4			
UTILITY 5 T		4			4		
FUEL TRAILER 600 g.	1	[illegible]	4				
SCRAPERS-ELEV. 18cy.		[illegible]				1	
10cy.	5	22	6	16			10
STD. 18cy.		90			24	66	18
14cy.		5	5				1
BULLDOZER - WHEEL		2			2		
TRACK 300 HP		80	19	1	2	58	12
200 HP	8	9	1			8	8
140 HP		11	9			2	
70 HP		16	13	3			
DRAGLINE 2.5 cy		13	9	1		3	
1.5 cy		20	8			12	
1.2 cy	10	29				29	
1.0 cy		4				4	
.75 cy		15	8			7	
HYD.EXCAVATOR 3 cy		10			10		
1.4 cy	5	7		6	1		
.75 cy		14	4	4	6		
GRADALL	1	3	3				
F.E.LOADER 3 cy		10	4		6		
2.5 cy		4	4				
1.5 cy		2	2				
.5 cy b/hoe 1 cy		32	20	9	3		
GRADERS 275 HP		2				2	
150 HP	5	12	2			10	
125 HP		10				10	
ELEC.SETS. 50 KW		9	2	2		5	
25 KW	2	14			14		
10 KW							
-5 KW		18	8	3		7	
VIB.COMPACT. 11 T						6	
6 T	3	7	7				
PLATE		310	310				
ROLLER 1 T		30	30				
3 WHEEL 10-12T	3	3				3	3
JEEP		41	21	12	4	4	8
PICK UP.		33	20		2	11	1
LAND CRUISER	5	19	19				
CAR/WAGON		4	4				1
VAN/BUS		2	1			1	
MOBILE WORKSHOP	1	3				3	
SERVICE UNIT	1	2				2	
WELDING UNIT	1	4			4		
DRILLS - WELL	8	3	1	2			
ROCK		23		1	6	16	
COMPRESSOR 750 cfm		1	1				
600 cfm	2						
10 cfm		3				3	

SOURCE : App. 7.2-4 (PRC/Checchi).

BEST AVAILABLE DOCUMENT

APPENDIX 7.2

PUNJAB - PID EQUIPMENT INVENTORY

CATEGORY	TOTAL NO.OF UNITS	3 YEARS OR LESS GOOD	4-6 YEARS FAIR	7-10 YEARS POOR/SCRAP	OVER 10 YEARS IN USE SCRAP	NOT IN USE USED FOR PARTS SCRAP
TRUCK CRANE 35 T	2			1	1	
15 T						
10 T	1				1	
8.5 T						
5 T	1				1	
SIDE BOOM CRANE	3			2	1	
TRUCK - FLAT BED 8 T	4	4				
DUMPER 75 T						
50 T						
10 T	16	16				
8 T						
LOWBED 70 T						
50 T	2	2				
35 T						
20 T						
LUBE	6	2		4		
FUEL 2500 g.	2	2				
WATER 2500 g.	12	12				
UTILITY 5 T	2			2		
FUEL TRAILER 600 g.						
SCRAPERS-ELEV. 18cy.						
10cy.	6	6				
STD. 18cy.	52			18	34	
14cy.	5	5				
BULLDOZER - WHEEL	2			2		
TRACK 300 HP	37	15			22	
200 HP						
140 HP	6	6				
70 HP						
DRAGLINE 2.5 cy	11	9			2	
1.5 cy	8	8				
1.2 cy						
1.0 cy	4				4	
.75 cy	18	6			12	7
HYD.EXCAVATOR 3 cy	10			10		
1.4 cy						
.75 cy	10	4		6		
GRADALL	2	2				
F.E.LOADER 3 cy	6			6		
2.5 cy						
1.5 cy						
.5 cy b/hoe 1 cy	3			3		
GRADERS 275 HP	2				2	
150 HP	10				10	
125 HP						
ELEC.SETS. 50 KW						
25 KW						
10 KW						
-5 KW						
VIB.COMPACT. 11 T	4				4	
6 T	5	5				
PLATE	36	36				
ROLLER 1 T	15	15				
3 WHEEL 10-12T						
JEEP	2	2				
PICK UP.	16	15		1		
LAND CRUISER						
CAR/WAGON						
VAN/BUS	1				1	
MOBILE WORKSHOP						
SERVICE UNIT						
WELDING UNIT						
DRILLS - WELL						
ROCK						
COMPRESSOR 750 cfm						
600 cfm						
10 cfm						

SOURCE : PRC/Checchi Computer Printout 03/87

BEST AVAILABLE DOCUMENT

425

APPENDIX 7.3

SIND - PID EQUIPMENT INVENTORY

CATEGORY	TOTAL NO.OF UNITS	3 YEARS OR LESS GOOD	4-6 YEARS FAIR	7-10 YEARS POOR/SCRAP	OVER 10 YEARS IN USE SCRAP	NOT IN USE USED FOR PARTS SCRAP
TRUCK CRANE 35 T	2				2	
15 T						
10 T	2				2	
8.5 T						
5 T	1		1			
SIDE BOOM CRANE						
TRUCK - FLAT BED 8 T						
DUMPER 75 T	1				1	
50 T	4			2	2	
10 T	8	8				
8 T	6				6	
LOWBED 70 T						
50 T	3				3	
35 T						
20 T						
LUBE	6	2		4		
FUEL 2500 g.						
WATER 2500 g.	8	8				
UTILITY 5 T	2			2		
FUEL TRAILER 600 g.						
SCRAPERS-ELEV. 18cy.						
10cy.						10
STD. 18cy.	38			6	32	16
14cy.						
BULLDOZER - WHEEL						
TRACK 300 HP	36	1	1	2	32	8
200 HP	9	1			8	
140 HP	2				2	
70 HP						
DRAGLINE 2.5 cy	1				1	
1.5 cy	17			5	12	
1.2 cy	29				29	
1.0 cy						
.75 cy	7				7	
HYD.EXCAVATOR 3 cy						
1.4 cy	6		6			
.75 cy						
GRADALL						
F.E.LOADER 3 cy						
2.5 cy						
1.5 cy						
.5 cy b/hoe 1 cy	9		9			
GRADERS 275 HP						
150 HP						
125 HP	8				8	
ELEC.SETS. 50 KW	4				4	
25 KW	14			14		
10 KW						
-5 KW						
VIB.COMPACT. 11 T	2				2	
6 T						
PLATE	258	258				
ROLLER 1 T	10	10				
3 WHEEL 10-12T						
JEEP	26	19	4	3		
PICK UP.	17	5		1	11	
LAND CRUISER						
CAR/WAGON						
VAN/BUS						
MOBILE WORKSHOP	3				3	
SERVICE UNIT	2				2	
WELDING UNIT	4			4		
DRILLS - WELL						
ROCK						
COMPRESSOR 750 cfm						
600 cfm						
10 cfm						

SOURCE : PRC/Checchi Computer Printout 03/87

BEST AVAILABLE DOCUMENT

APPENDIX 7.4

NWFP - PID EQUIPMENT INVENTORY

CATEGORY	TOTAL NO.OF UNITS	3 YEARS OR LESS GOOD	4-6 YEARS FAIR	7-10 YEARS POOR/SCRAP	OVER 10 YEARS IN USE SCRAP	NOT IN USE USED FOR PARTS SCRAP
TRUCK CRANE 35 T						
15 T						
10 T						
8.5 T						
5 T						
SIDE BOOM CRANE						
TRUCK - FLAT BED 8 T						
DUMPER 75 T						
50 T						
10 T						
8 T	5	4			1	3
LOWBED 70 T						
50 T						
35 T	1		1			
20 T	1		1			
LUBE	2	2				
FUEL 2500 g.						
WATER 2500 g.						
UTILITY 5 T						
FUEL TRAILER 600 g.						
SCRAPERS-ELEV. 18cy.	1				1	
10cy.						
STD. 18cy.						2
14cy.						1
BULLDOZER - WHEEL						
TRACK 300 HP	4				4	4
200 HP						
140 HP						
70 HP						
DRAGLINE 2.5 cy	1		1			
1.5 cy						
1.2 cy						
1.0 cy						
.75 cy	1	1				
HYD.EXCAVATOR 3 cy						
1.4 cy	3	2		1		
.75 cy						
GRADALL						
F.E.LOADER 3 cy						
2.5 cy						
1.5 cy						
.5 cy b/hoe 1 cy						
GRADERS 275 HP						
150 HP						
125 HP	2				2	
ELEC.SETS. 50 KW	3		2		1	
25 KW						
10 KW						
-5 KW	10		3		7	
VIB.COMPACT. 11 T						
6 T	1		1			
PLATE	4		4			
ROLLER 1 T	2		2			
3 WHEEL 10-12T	3				3	3
JEEP						8
PICK UP.						1
LAND CRUISER						
CAR/WAGON						1
VAN/BUS						
MOBILE WORKSHOP						
SERVICE UNIT						
WELDING UNIT						
DRILLS - WELL	2		2			
ROCK						
COMPRESSOR 750 cfm						
600 cfm						
10 cfm	3				3	

SOURCE : PRC/Cecchi Computer Printout 03/87

BEST AVAILABLE DOCUMENT

APPENDIX 7.5

BALUCHISTAN - PID EQUIPMENT INVENTORY

NOT APPLICABLE TO CRP.

BEST AVAILABLE DOCUMENT

APPENDIX 7.6

PUNJAB D O H

SUMMARY EQUIPMENT INVENTORY AND CONDITION REPORT

CATEGORY	NO.OF MAKES	TOTAL NO.OF UNITS	3 YEARS OR LESS GOOD	4-6 YEARS FAIR	7-10 YEARS POOR/SCRAP	OVER 10 YEARS IN USE SCRAP	NOT IN USE USED FOR PARTS SCRAP	No. Units Under 6 Years
ASPHALT PREMIX PLANT	4	5				5		
AIR COMPRESSOR	3	3				3		
AGGREGATE SPREADER	2	2			2			
BITUMEN SPRAYER	4	8	3		4		1	3
BULLDOZER-ALL SIZES	5	127	90	5	5	20	7	95
CHIPS SPREADER	1	2	2					2
CRANE	10	14				9	5	
DUMPER	8	49	5		21	19	4	5
EXCAVATOR	1	1			1			
GENERATOR	2	7				6	1	
GREASE /SERVICE UNIT	1	1		1				1
TROLLEY	1	6		6				6
LIFT TRUCK	1	1		1				1
LOADER-FRONT END	7	20				11	9	
MOTOR GRADER	6	60	52			6	2	52
OIL TANK	1	1			1			
PAVER-FINISHER	5	7		4	1		2	4
PUG MILL	1	1		1				1
REG MACHINE(TRUCK)	1	1				1		
ROAD ROLLER-STATIC	36	690	57	98	64	417	54	155
SCRAPER-MOTORIZED	5	16		5	4		7	5
SNOW CLEARING MACHINE	6	6		6				6
SAND BLAST UNIT	1	1		1				1
TIPPER TRUCK	1	2	2					2
TRACTOR-AG.TYPE	8	43				37	6	
TRUCK TRAILER	6	10			6	3	1	
TRUCK	13	81	4		49	14	14	4
TAR KETTLE/BOILER	1	52	5	12	17	11	7	17
WORKSHOP TRUCK	1	1				1		
WATER TRUCK	2	19		10		8	1	10
WATER TANK	1	5			5			
WATER PUMP	2	23			20	1	2	
WAGONS	2	5		3		1	1	3
JEEPS	10	104	3	92		2	7	95
CARS	5	19		6		8	5	6
PICK UPS	4	41	35				6	35
TOTAL	102	1434	258	251	200	583	142	
PERCENTAGE OF TOTAL		100	18	17	14	41	10	

SOURCE : PUNJAB DOH INVENTORY 17.11.86

BEST AVAILABLE DOCUMENT

429

APPENDIX 7.7

SIND D O H

SUMMARY EQUIPMENT INVENTORY AND CONDITION REPORT

CATEGORY	NO.OF MAKES	TOTAL NO.OF UNITS	3 YEARS OR LESS GOOD	4-6 YEARS FAIR	7-10 YEARS POOR/SCRAP	OVER 10 YEARS IN USE SCRAP	NOT IN USE USED FOR PARTS SCRAP	No. Units Under 6 Years
ASPHALT PREMIX PLANT		6			3	3		
BITUMEN SPREADER		1			1		1	
BULLDOZERS		41	14	8	7	12	8	22
CHIPS SPREADER		1			1			
CRANES		3				3	2	
DUMP TRUCKS		46	6	8	20	12	18	14
GENERATOR		1			1			
LOADERS-FRONT END.		6			3	3	4	
MOTOR GRADER		28	18		4	4	18	18
PAVER-FINISHER		5		3	2		3	3
ROAD ROLLER-STATIC		314	22	51	36	205	72	73
SCRAPER		5		3		2	12	3
TRACTOR-AG.TYPE		12				12	4	
TRUCK TRAILER		3			2	1	2	
TAR KETTLE/BOILER		16	2	4	5	5	6	6
TOW SWEEPER		1		1	1			1
WATER TRUCK		24		11	3	10	4	11
JEEPS/PICK UPS		59	2	44	8	7	5	46
CARS		4		2		2	1	2

SOURCE : SIND DOH INVENTORY 1986-87. (21-3-87)

BEST AVAILABLE DOCUMENT

430

APPENDIX 7.8

NWFP D O H

SUMMARY EQUIPMENT INVENTORY AND CONDITION REPORT

CATEGORY	NO.OF MAKES	TOTAL NO.OF UNITS	3 YEARS OR LESS GOOD	4-6 YEARS FAIR	7-10 YEARS POOR/SCRAP	OVER 10 YEARS IN USE SCRAP	NOT IN USE USED FOR PARTS SCRAP	No. Units Under 6 Years
ASPHALT PLANT		16						
AIR COMPRESSOR		25						
AGGREGATE SPREADER								
BITUMEN SPRAYER								
BULLDOZER		30						
CHIPS SPREADER								
CRANE		1						
DUMPER		14						
EXCAVATOR								
GENERATOR		2						
GREASE /SERVICE UNIT								
TROLLEY								
LIFT TRUCK								
LOADER-FRONT END		4						
MOTOR GRADER		3						
OIL TANK								
PAVER-FINISHER								
PUG MILL								
REG MACHINE(TRUCK)								
ROAD ROLLER-STATIC		283						
SCRAPER-MOTORIZED								
SNOW BLOWER		1						
SAND BLAST UNIT								
TIPPER TRUCK								
TRACTOR-AG.TYPE								
TRUCK TRAILER		4						
TRUCKS		16						
TAR KETTLE/BOILER		117						
WATER TANKER		1						
WATER PUMP								
WAGONS		11						
JEEPS		66						
CARS		3						
PICK UPS		26						
DRILLS		52						
CONCRETE MIXER		9						
PLATE COMPACTOR		2						
RESURFACING UNIT		2						
CRUSHER		3						
VIBRATORS		5						

SOURCE : NWFP DOH INVENTORY 03-87

BEST AVAILABLE DOCUMENT

APPENDIX 7.9

ESTIMATED HOURLY OWNING AND OPERATING COSTS

The hourly rates for the equipment have been base on the Consultants' experience with equipment operating under similar conditions. Although efforts are being made to increase the utility of equipment in Pakistan the reasonable annual use for the foreseeable future is 1200 hours. The low use of equipment in addition to reasons of mechanical breakdown is caused by weather, flooding, harvest season, hunting, holidays, and poor equipment management.

1. Owning Cost

Depreciation is assumed to be in a straight line based on the estimated economic life of the machine in hours. Newer machines with rebuildable components have longer useful lives each varying with the type of machine, application, and maintenance. As a convenient guide refer to the Caterpillar Performance Handbook, ed. 17, October 1986. No allowance for depreciation has been included in the local currency budget as all equipment recommended for the CRP will have been supplied previously under ISMR-I or will, presumably, be supplied for the CRP under an assistance programme. A calculation to include capital, investment, and insurance costs has been shown however to more accurately show the true hourly equipment cost (App.7.9 A).

BEST AVAILABLE DOCUMENT

While there are several methods of calculating machine depreciation the Consultant has used a residual value of 0 at the end of its economic life and, although there may be some value on resale several years in the future the used equipment resale market in Pakistan is quite small and the discounted value realized has a negligible impact on the current hourly cost.

Rubber tired vehicles at the time of disposal usually have tires with no value therefore the original set has also been written off to 0 with replacement tires being accounted for in the O&O.

Interest and Insurance is not generally accounted for in Pakistan but has been included in the tabulation of O&O to indicate the extent of the true cost of equipment investment. In the budget for CRP local currency it has not been included.

2. Operating Costs

Fuel Cost has been estimated using consumption experienced in similar conditions where the annual use was low and idle or idling time relatively high. Cost of fuel 8 Rs./litre.

Lubricants and other expendables have been estimated at 10% of fuel costs.

Repairs can be broken down into repair labour and

BEST AVAILABLE DOCUMENT

repair parts. Over thirty years of experience with construction equipment has shown that over its economic life a construction machine will consume its original cost in spare parts and labour. This maxum holds just as true for new technology equipment as it did for older equipment except the economic life of newer machines has increased from 6 - 8000 hours to 12-15000 hours.

(Some specialized types of equipment may have much shorter or longer life.) Because of the modern component design of equipment the ratio of parts to labour has also changed, from 40/60 to 60/40 in most cases, again depending on type of equipment and application. In the parts budget 15 % of parts and all tires have been assumed to be obtained locally.

Tires are available locally for most machines and have been treated accordingly. Application and type of vehicle will influence the tire life as indicated.

While it is possible to recap tires thereby extending the carcass life there has been only limited local success on construction equipment tires. For estimating purposes tires have been run out to 0 with no recap.

3. Operating Labour since the PIDs wish to do all construction then it is assumed that skilled operators will be supplied by the PID. Because most operators are retained on an annual basis the monthly rate must be amortized over the anticipated period of actual annual

$$\text{Hourly cost} \quad \frac{1000 \text{ Rs/Mo} \times 12 \text{ Mos}}{1200 \text{ hrs}} = 10 \text{ Rs / hr.}$$

A relief operator should be available for every 3 operating machines-additional cost/unit = 3.3 Rs/hr. Custom also suggests that each operating machine will have a helper - cost 800 Rs./month. This labour is unskilled it can be hired locally, daily, as needed. Effective working time therefore is, say, 9 months.

$$\text{Hourly cost} \quad \frac{800 \text{ Rs} \times 9 \text{ mos}}{1200 \text{ hrs}} = 6 \text{ Rs/hr}$$

Total Operating Labour cost per hour = 19.3 Rs/hr.

Say 19 Rs/hr.

APPENDIX 7.9 A

LIST PRICES (US $1000)

ESTIMATED HOURLY OWNING AND OPERATING COST

(IN RUPEES)

DESCRIPTION	62 HP. TRACTOR ATTACH-MENT	62 HP. TRACTOR TROLLEY	165 HP BULLDO-ZER	11 CY Elev. SCRAPER	S.P.VIB. COMPACTOR PAD FOOT 13 T	PLATE COMPACTOR	WATER TRUCK 2,500 GAL FUEL TRUCK	FLAT DECK TRUCK	PICKUP 1/2TON	MECHANIC TRUCK LUBE TRUCK	150 HP GRADER	4" PUMP 150' HOSE	3 CF CEMENT MIXER	TRUCK TRACTOR LOW BED 50 T
List price US $	64.00	66.00	163.00	145.00	102.00	6.50	65.00	44.00	19.00	70.00	164.00	3.00	3.00	150.00
Rupees	1095.68	1129.92	2790.56	2482.40	1746.24	111.28	1112.80	753.3	325.3	1198.4	2807.68	51.4	51.4	2568.0
1.OWNING COST														
Depreciation	91	94	233	248	146	11	93	63	41	80	187	9	9	171
Interest, Insurance	100	104	256	228	160	10	102	69	30	110	257	5	5	236
Total Owning Cost	191	198	489	476	306	21	195	132	71	190	445	14	14	407
2. OPERATING COST														
Fuel @8 Rs/l	48	48	144	184	240	8	144	120	80	120	160	32	32	120
Lube .1xFuel	5	5	14	18	24	1	14	12	8	12	16	3	3	12
Repair-Labour	36	38	93	100	58	4	37	25	15	32	75	2	2	68
Parts	55	56	140	149	87	7	56	38	25	48	112	4	4	103
Tires	3	3		26	9		8	8	6	10	14			41
Total Operating Cost	148	150	391	477	419	20	259	203	134	222	377	41	41	344
Total Owning and Operating Cost	339	348	880	953	725	41	454	335	205	412	822	55	55	751
DEPRECIATION HRS	12000	12000	12000	10000	12000	10000	12000	12000	8000	15000	15000	6000	6000	15000
TIRE COST RS	5136	5136		65000	46224		20544	20544	9590	20544	71944			82176
TIRE LIFE TO RUNOUT HRS	1800	1800		2500	5000		2500	2500	1500	2000	5000			2000

Source : Manufactureers, Distributors.
Consultants Estimate.

BEST AVAILABLE DOCUMENT

436

APPENDIX 7.9 A cont'd

LIST PRICES (US $1000)

ESTIMATED HOURLY OWNING AND OPERATING COST
(IN RUPEES)

DESCRIPTION	10-12 t COMPACTOR Smooth drum	BITUMEN HEATING AND STORAGE TANK	FRONT END LOADER 3-1/2 CY	CHIP SPREADER	10 t DUMP TRUCK 250 HP	ROTARY BROOM	BITUMEN SPREADER	5 KW ELECTRIC SET	HYD.EXAV 145 HP 1(1/4) CY
List price US $	70.00	83.80	150.00	86.33	78.00	10.20	79.50	8.50	170.00
1000 Rupees	1198.40	1434.66	2568.00	1477.97	1335.36	174.62	1361.04	145.52	2910.40
1.OWNING COST									
Depreciation	80	96	214	99	111	17	113	7	243
Interest, Insurance	110	132	235	135	122	16	125	13	267
Total Owning Cost	190	228	449	234	233	33	238	20	510
2. OPERATING COST									
Fuel @8 Rs/l	88	400	160	64	168	64	144	32	160
Lube .1xFuel	9	40	16	6	17	6	14	3	16
Repair-Labour	24	38	86	49	45	7	45	3	97
Parts	48	57	128	59	67	10	68	3	146
Tires			22	2	14	1	10		
Total Operating Cost	169	535	412	180	310	88	281	41	419
3. Total O & O Cost	359	763	861	414	543	121	519	61	929
Depreciation Period-Hours	15000	15000	12000	15000	12000	10000	12000	20000	12000
Tyre Cost Rs.			65000	6500	36000	4000	20544		
Life-Hours			3000	4000	2500	3000	2000		
Interest 12%, Insurance 10Rs/100Rs									

BEST AVAILABLE DOCUMENT

APPENDIX 7.10

CALCULATIONS FOR RENTAL RATE COMPARISON.

Rental rates are based on an 8 hour day. The rentee supplies daily servicing and repairs (15%) plus fuels, lubes, and an operator. Major repairs and scheduled servicing are usally to the rentors account.

DESCRIPTION	ROAD ROLLER 6 T	BULLDOZER A.G. TYPE 65-70 HP	TRUCK DUMPER 10 T	TRACTOR 65 HP	S.P. VIB. COMPACTOR 12 T
List price 1000 US $	57.00	27.00	78.00	64.00	102.00
1000 Rupees	975.84	462.24	1335.36	1095.68	1746.24
1. OWNING COST	81	39	111	91	146
2. OPERATING COST					
REPAIR-LABOUR	21	13	38	31	49
-PARTS.	41	20	57	47	74
TIRES.			12	3	8
TOTAL O & O *	143	72	218	172	277
OVERHEADS @ 20%	29	14	44	34	55
RENTAL RATE/HR.	172	86	262	206	332
/8HR DAY	1376	688	2096	1648	2656
* No Interest, Insurance Fuels, Lubes, Operator					
DEPRECIATON OVER (HOURS)	15000	12000	12000	12000	12000

SOURCE : App. 7.9

CONSULTANTS' ESTIMATE

BEST AVAILABLE DOCUMENT

438

APPENDIX 7.11

TYPICAL EQUIPMENT FLEETS

ESTIMATED PRODUCTION

When constructing the embankments it will be necessary to complete each section to finished subgrade and specified compaction and seal the grade before moving to the next section or reach.

Aside from the bulldozer which can work alone (except for a compactor) all other earthmovers require support equipment not only for excavation, placement, and compaction but for daily maintenance and daily job administration if the job is to be managed efficiently.

Following are two types of construction fleets "A" and "B". "A" utilizes scrapers as earthmovers usually on shorter hauls and where traffic congestion in minimal. "B" uses trucks and front end loaders which offer more flexibility particularly on longer hauls.

Bull dozers generally work effectively on short "pushes" not exceeding 100 ft, unless specially equipped. As haul distances change it may be necessary to add or subtract haulers and loaders from the fleet to maintain optimum efficiency.

In assessing the equipment requirements for the CRP the Consultants have broken down the embankment hauls into distances of 50ft, 800ft, 2000ft, and one mile. These are distances most commonly found on this type of job.

BEST AVAILABLE DOCUMENT

APPENDIX 7.11 cont'd.

TYPICAL WORK TEAMS

1.	Earthwork (Embankment)	1 - 2-1/2 cy loader 2 - Bulldozer, Scraper, Trucks* 4 - Tractor Trolleys 1 - S.P. Vibratory Padfoot Compactor 2 - Water Trucks 2 - Pickups 2 - Water Pumps 1 - Fuel Tank
2.	Ditch & Culvert	1 - Grader 1 - Tractor with backhoe 1 - Tractor and Trolley
3.	Surfacing	1 - Bitumen Fleet 1 - Compactor 2 - Pickups
4.	Shoulders	1 - Bulldozer 1 - Loader (Tractor) 2 - Tractor trolleys or dump trucks* 1 - Compactor 1 - Grader 2 - Water Pumps 2 - Pickups
5.	Access Road/Track	1 - Grader 2 - Water Truck 1 - Compactor 2 - Water Pumps

N.B. Hand tools required on all jobs

* NUMBER OF HAUL Units and loaders will depend on haul distance

BEST AVAILABLE DOCUMENT

440

APPENDIX 7.11 cont'd

PRODUCTION OF TYPICAL EARTHMOVERS.

1. BULLDOZER 165 HP POWER SHIFT. **4916**

Equipped with a straight blade -42 min. hour
dozing 100 feet. (50 ft cut, 50 ft. drift)
material cut from bank - factor 0.85
average operator - factor 0.85

Production 360 x 27 x .7 x .85 x .85 = 4916 cft

2. ELEVATING SCRAPER 297 cf rated capacity

Load factor 0.82
Load per trip 297 x 0.82 = 244 cfth

a. Situation 1 haul distance 800 ft. 7530 cfth
road resistance 6% (total)

load time	1.00 min.	
haul time	0.91 min.	(10 mph)
dump time	0.80 min.	(manoeuver and spread)
return time	0.76 min.	(12 mph)
cycle time	3.47 min.	

Efficiency 70 % i.e. 42 min hour.

Operator, average - factor 0.85

Production 244 x 60 x 0.7 x 0.85 / 3.47 = 2510 cfth

On 800 ft. haul use 3 scrapers 3 x 2510 = 7530 cfth

b. Situation 2 haul distance 2000 ft. 7600
road resistance 6% (total)

load time	1.00 min.	
haul time	1.52 min.	(15 mph)
dump time	0.80 min.	(manoeuver and spread)
return time	1.26 min.	(18 mph)
cycle time	4.58 min.	

Efficiency 70 % i.e. 42 min hour.

Operator, average - factor 0.85

Production 244 x 60 x 0.7 x 0.85 / 4.58 = 1902 cfth

On 2000 ft. haul use 4 scrapers 4 x 1900 = 7600 cfth

3. FRONT END LOADER 94 cf. capacity.

DUMP TRUCKS 10 T (232 cf capacity, heaped.)

Load factor 0.82

No. of passes to load truck 3 4550 cfth

Haul distance 1 mile

load time	1.50 min.	
haul time	3.00 min.	(20 mph)
dump time	1.00 min.	(manoeuver and spread)
return time	2.40 min.	(25 mph)
cycle time	7.90 min.	

Efficiency 70 % i.e. 42 min hour.

Operator above average - factor 0.90

Production 232 x .82 x 60 x .7 x .9 / 7.90 = 910 cfth

Loader can handle 7.90 / 1.5 = 5 trucks.

with some time for pit cleanup

TOTAL PRODUCTION 5 x 910 =4550 cfth.

4. COMPACTOR

Compactor production is usually expressed in compacted cubic feet per hour using the formula :

$$\text{cft/hr} = \frac{W \times S \times L \times 440}{P.}$$

Where W = compacted width per pass = 7 ft.

S = average speed (say) = 4 mph.

L = compacted thickness of lift = 6 inches

440 = conversion constant 5280 ft./12 inches

P = number of passes determined in a field test by engineer (say) = 6

$$\text{cft/hr} = \frac{7 \times 4 \times 6 \times 440}{6} = 12{,}320$$

Production required year - average 1200 hrs/yr.

Punjab (Ref. A 8.4) 89715335 cft.	=	6.07	Compactors use 9
Sind (Ref. A 8.4) 93074586 cft.	=	6.29	Compactors use 9
NWFP (Ref. A 8.4) 16998960 cft.	=	1.15	Compactors use 3

Not that compactors must compact all material whether traditional, private, or PID handled. Because the compactors must move between locations frequently and over long distances the requirement has been rounded up 40 % to give extra capacity.

5. GRADER

The graders have more than enough capacity to maintain the grade, haul roads and borrow areas. One has been provided for each PID fleet but none for the rental or private contractors. If graders were required for them an additional II would be required. Cost US $ 1,804,000. not included in budget.

APPENDIX 7.12

TYPICAL EQUIPMENT FLEETS.

OPPERATING COST-RUPEES.

DESCRIPTION	NO.	UNIT. * O & O	Subtotal	OPERATORS	TOTAL
CONSTRUCTION FLEET. B					
BULLDOZER 165 HP	2	391	782	38	820
FRONT END LOADER 3.5 CY.	1	369	369	19	388
DUMP TRUCK 10 T.	5	310	1550	95	1645
MOTOR GRADER 150 HP	1	371	371	19	390
WATER TRUCK. 2500 gal.	1	259	259	19	278
FUEL TRUCK. 500gal/2000gal	1	259	259	19	278
LUBE TRUCK.	1	222	222	19	241
S.P.VIBRATORY COMPACTOR. Padfoot 13 Tons.	1	419	419	19	438
	13		4231	247	4478
				Subtotal	4478
BASIC EQUIPMENT.					
PLATE COMPACTORS	2	20	40	16	56
PICK UPS. 1/2 TON.	2	134	268	38	306
SERVICE TRAILER	1	5	5		5
PARTS TRAILER	1	5	5		5
OFFICE TRAILER	1	5	5		5
4" WATER PUMPS, 150' HOSE	4	41	164	32	196
MECHANICS TOOLS. (SETS)	4		0		0
ELECTRIC SET SKW.	1	41	41		41
LABOUR - MECHANICS @ 10	4		0	40	40
HELPERS @ 8	4		0	32	32
PARTS @ 8	2		0	16	16
OFFICE @ 10	2		0	20	20
MISC. @ 8	4		0	32	32
Subtotal	32		528	226	754
				Subtotal	754
				Total	5232

Unit Cost 1 mile haul 5232/4300 = 1.22 Rs/cf.

*No depreciation, interest, insurance.

Source : Consultants Estimate. App. 7.9 A

444

APPENDIX 7.12

TYPICAL EQUIPMENT FLEETS.

OPPERATING COST-RUPEES.

DESCRIPTION	NO.	UNIT. * O & O	Subtotal	OPERATORS	TOTAL
CONSTRUCTION FLEET. A					
BULLDOZER 165 HP	2	391	782	38	820
ELEVATING SCRAPER 11 CY.	4	477	1908	76	1984
MOTOR GRADER 150 HP	1	377	377	19	396
WATER TRUCK 2500 gal.	1	259	259	19	278
FUEL TRUCK. 500gal/2000gal	1	259	259	19	278
LUBE TRUCK.	1	222	222	19	241
S.P.VIBRATORY COMPACTOR. Padfoot 13 Tons.	1	419	419	19	438
	11		4226	209	4435
BASIC EQUIPMENT.				Subtotal	4435
PLATE COMPACTORS	2	20	40	16	56
PICK UPS. 1/2 TON.	2	134	268	38	306
SERVICE TRAILER	1	5	5		5
PARTS TRAILER	1	5	5		5
OFFICE TRAILER	1	5	5		5
4" WATER PUMPS, 150' HOSE	4	41	164	32	196
MECHANICS TOOLS. (SETS)	4		0		0
ELECTRIC SET SKW.	1	41	41		41
LABOUR - MECHANICS @ 10	4		0	40	40
HELPERS @ 8	4		0	32	32
PARTS @ 8	2		0	16	16
OFFICE @ 10	2		0	20	20
MISC. @ 8	4		0	32	32
Subtotal	32		528	226	754
				Subtotal	754
				Total	5189

Unit Cost 800 ft. haul. (5189 -496 -(scraper)/7530 = .62 Rs/cf.
2000 ft. hual. 5189 / 7600 = .68 Rs/cf.

*No depreciation, interest, insurance.

Source : Consultants Estimate. App. 7.9 A

445

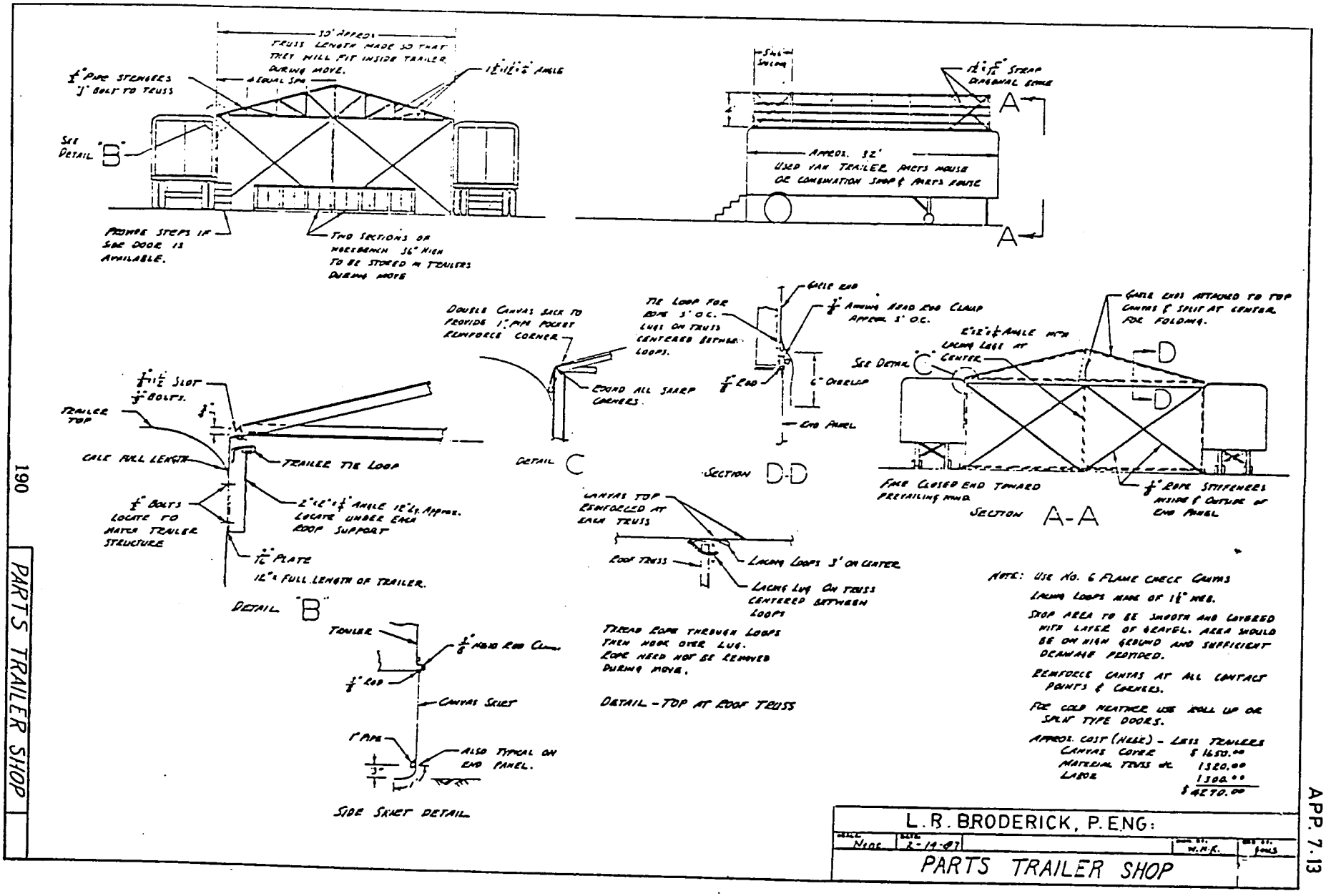

190 PARTS TRAILER SHOP

APP. 7.13

446

BEST AVAILABLE DOCUMENT

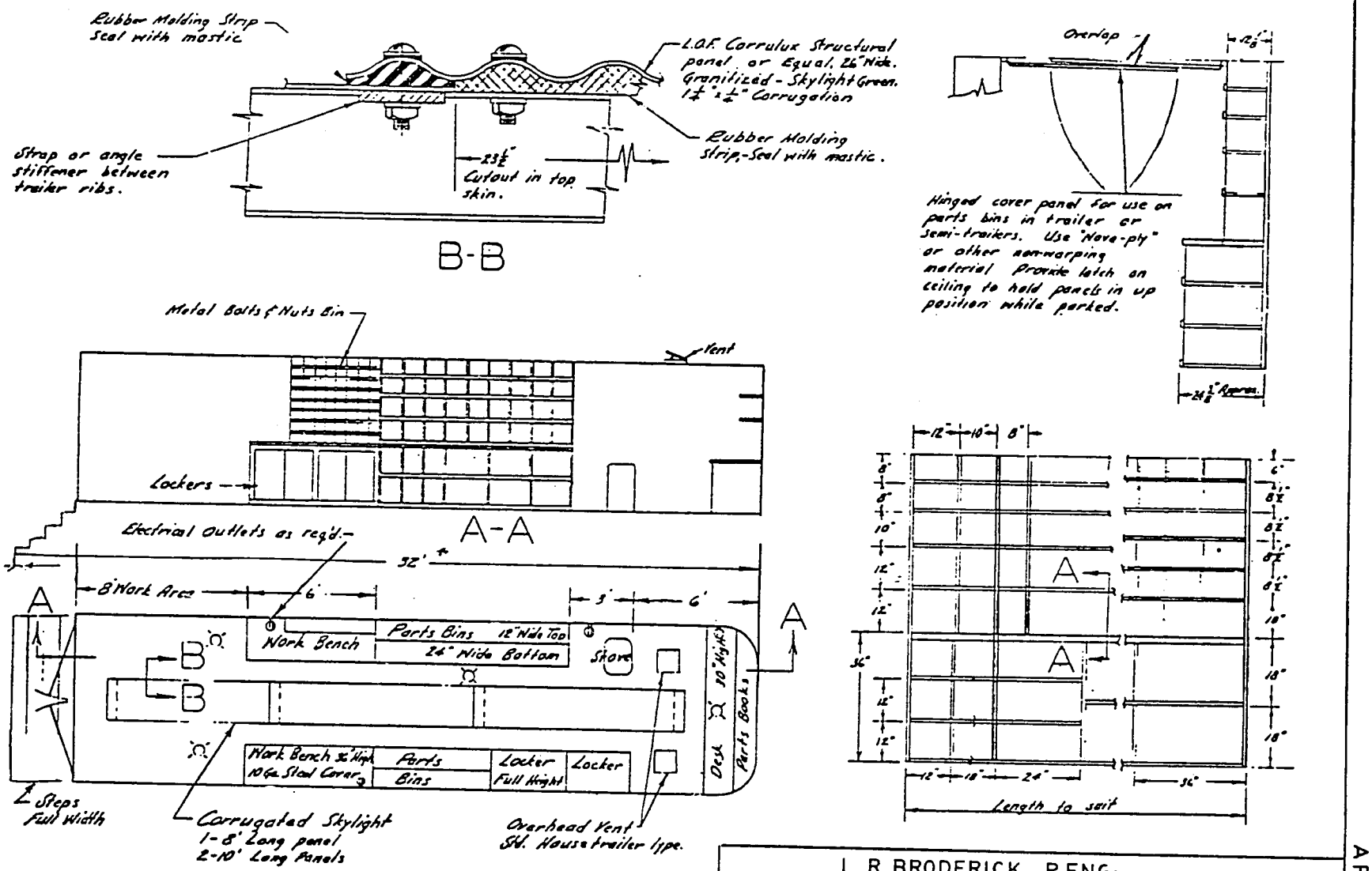

BEST AVAILABLE DOCUMENT

APPENDIX 7.15

SAMPLE OF EQUIPMENT OWNED BY CONTRACTORS

CATEGORY	LARGE CONTRACTORS- LAHORE: SAADULLAH KHAN & BROTHERS NO.OF UNITS	SAADULLAH KHAN & BROTHERS AGE RANGE 19-to 19	NAZIR & CO. NO.OF UNITS	NAZIR & CO. AGE RANGE 19-to 19	CLASS 'A' HIGHWAY CONTRACTORS - KARACHI/ HYDERABAD: DIN MOHD	SHAIKH NAZIR	ALI KHAN	HAROON RASHID	M.BUKSH MEMON	HABIB ULLAH KHAN	AMIR ASLAM	ABDUL HAKIM	HAFIZ ULLAH	SUPER CONT	ALI MOHD.	STEEL MILL
ASPHALT PLANTS	2		2	81,82												large
FINSHERS	3		4	81.85				1								
DISTRIBUTORS	4		1													No.of
BULLDOZER-150 HP			7	80-85												
+151 HP	6		6	80-85				1	1	1						most
FRONT END LDR-3Cm	1		11	80-85												
+3Cm	15		1	81												types
GRADERS	6		6	80-85					1							
DUMP TRUCKS	45		44	80	2	2	1	2	2	1	1	2	1	1	2	of
ROLLERS-STATIC-10 T	16		4	82,83												
+10 T	12		10	old-85				1					1		1	earth-
-VIB.Smooth	8		16	81-85												moving
-Pneumatic	3		2	85												
TRACTORS(Ag) 60 HP	29		74	69-84	2	3	1	2	2	3	1	2	1	1	2	equip-
HARROWS, DISCS	16															ment
CONCRETE MIXER -3Cm	10					1									1	
Truck			16	75-85												will
TRANSPORT-BULK	20		14	52-81												
LOW BED	4		1													bid on
WATER TRUCK-SP	4				2	1		1	1	1			2		1	
-TOWED	7															large
DIESEL TANKER	2															
GENERATORS	6															contr-
COMPRESSORS	7		1													acts.
CRUSHERS																
+100 Tph primary	1		1	83												
-70 Tph screen	5		9	81-84												
VEHICLES- Pick up			28	74-85												
Car/Jeeps	15		31	72-96												
Bus			2													
WELDERS	15															
WORKSHOP - MOBILE	2															
CRANE 10 T			1	71												

BEST AVAILABLE COPY

448

APPENDIX 8.1

PID

CONST. EQUIPMENT CAPACITY AVAILABLE - PUNJAB

DESCRIPTION	MACHINES 0-6 YEARS. + 1/3 7-10 YRS.	AVAILABLE 70 % OF 5.5 Mos.	FIT FOR SERVICE 85 %	HOURS CAPACITY AVAILABLE MAX. 1144 hr. ea. per year
TRUCK - FLAT BED 8 T	4	2.8	2.38	2723
DUMPER 10 T	16	11.2	9.52	10891
LOWBED 50 T	2	1.4	1.19	1361
LUBE	2+1 = 3	2.1	1.79	2042
FUEL 2500 g.	2	1.4	1.19	1361
WATER 2500 g.	12	8.4	7.14	8168
SCRAPERS 10-14 cy.	11	7.7	6.55	7487
18 cy.*	6	4.2	3.57	4084
BULLDOZER 300 HP.	15+7 = 22	15.4	13.09	14975
140 HP.	6	4.2	3.57	4084
HYD.EXCAVATOR 3 cy.	3	2.1	1.79	2042
.75 cy.	4 + 2 = 6	4.2	3.57	4084
GRADALL	2	1.4	1.19	1361
F.E.LOADER 3 cy.	2	1.4	1.19	1361
1.5 cy.	1	0.7	0.60	681
GRADERS 275 HP	0.7	0.49	0.42	476
150 HP	3	2.1	1.79	2042
VIB.COMPACTOR 12 T				
PLATE	36	25.2	21.42	24504
JEEP	2	1.4	1.19	1361
PICK UP.	15	10.5	8.93	10210
LAND CRUISER				
BITUMEN SMOOTH DOH	315	RENT UP TO	10	11440
3 WHEEL ROLLER				

* Require pusher.

SOURCE : App. 7.2 (PRC/Checchi)

BEST AVAILABLE COPY

449

APPENDIX 8.2

PID

CONST. EQUIPMENT CAPACITY AVAILABLE - SIND

DESCRIPTION	MACHINES 0-6 YEARS. + 1/3 7-10 YRS.	AVAILABLE 70 % OF 5.5 Mos.	FIT FOR SERVICE 85 %	HOURS CAPACITY AVAILABLE MAX. 1144 hr. ea. per year
TRUCK - DUMPER 50 T	1.3	0.91	0.77	885
10 T	8	5.6	4.76	5445
8 T	2	1.4	1.19	1361
LOWBED 50 T	1	0.7	0.60	681
LUBE	2+1.3 = 3.3	2.31	1.96	2246
WATER 2500 g.	8	5.6	4.76	5445
SCRAPERS 18 cy.*	12.6	8.82	7.50	8577
BULLDOZER 300 HP.	2 +.6 = 2.6	1.82	1.55	1770
200 HP.	1	0.7	0.60	681
F.E.LOADER 1 cy. .5 cy b/hoe.	9	6.3	5.36	6126
GRADERS 125 HP		0	0.00	0
VIB.COMPACTOR 12 T PLATE	258	180.6	153.51	175615
BITUMEN 3 WHEEL SMOOTH ROLLER DOH	153	RENT UP TO	10	11440
JEEP	23+1 = 24	16.8	14.28	16336
PICK UP.		0	0.00	0
LAND CRUISER	5+.3 = 5.3	3.71	3.15	3608

* Require pusher.

SOURCE : App. 7.3 (PRC/Checchi)

BEST AVAILABLE COPY

450

APPENDIX 8.3

PID

CONST. EQUIPMENT CAPACITY AVAILABLE - NWFP

DESCRIPTION	MACHINES 0-6 YEARS. + 1/3 7-10 YRS.	AVAILABLE 70 % OF 5.5 Mos.	FIT FOR SERVICE 85 %	HOURS CAPACITY AVAILABLE MAX. 1144 hr. ea. per year
TRUCK - DUMPER 8 T	4	2.8	2.38	2723
LOWBED 35 T	1	0.7	0.60	681
20 T	1	0.7	0.60	681
LUBE	2	1.4	1.19	1361
SCRAPERS 18 cy.*		0	0.00	0
BULLDOZER 300 HP.		0	0.00	0
GRADERS 125 HP		0	0.00	0
VIB.COMPACTOR 11 T				
PLATE	4	2.8	2.38	2723
BITUMEN SMOOTH 3 WHEEL ROLLER DOH	1	0.7	0.60	681
	283	RENT AS REQUIRED		
JEEP				
PICK UP.				
LAND CRUISER				

* Require pusher.

SOURCE : App. 7.4 (PRC/Checchi)

BEST AVAILABLE COPY

451

APPENDIX B.4

CALCULATIONS OF VOLUMES TO BE MOVED BY PROVINCE

DESCRIPTION	REF.	AVERAGE VOL/Mi cu ft.	NO. OF MILES	MAX.MILES PER YEAR. 25%	EMBANKMENT VOLUME CFT/YEAR*	AMOUNT BY TRADITIONAL METHODS 45%	AMOUNT BY PRIVATE CONTR. 20% OF BAL. (11%)	AMOUNT BY MECHANISED METHODS 44%
PUNJAB								
MAIN CANAL.	FIG 1	575540	109	27.25	15683465	7057559	1725181	6900725
BRANCH CANAL	FIG 2	881305	90	22.50	19829363	8923213	2181230	8724920
DISTY/MINOR.	FIG 3	891137	328	82.00	73073234	32882955	8038056	32152223
DRAINS.	FIG 4	562854	39	9.75	5487827	2469522	603661	2414644
LINKS.	FIG 5	457144	30	7.50	3428580	1542861	377144	1508575
			596		117502468			51701086
SIND								
MAIN CANAL.	FIG 9	1081411	174	43.50	47041379	21168620	5174552	20698207
BRANCH CANAL	FIG 10	1136609	66	16.50	18754049	8439322	2062945	8251781
DISTY/MINOR.	FIG 11	801787	206	51.50	41292031	18581414	4542123	18168493
DRAINS.	FIG 12	538560	8	2.00	1077120	484704	118483	473933
LINKS.	FIG 13	1227553	31	7.75	9513536	4281091	1046489	4185956
			485		117678113			51778370
NWFF								
MAIN CANAL.	FIG 6	269741	48	12.00	3236892	1456601	356058	1424232
BRANCH CANAL	FIG 6	1090062	46	11.50	12535713	5641071	1378928	5515714
DISTY/MINOR.	FIG 7	548322	67	16.75	9184394	4132977	1010283	4041133
DRAINS.								
LINKS.	FIG 8	675840	1	0.25	168960	76032	18586	74342
			162		25125959			11055422

* Volume Required in years 3 and 4- maximum production.

SOURCE : References above
Consultants Estimate.

BEST AVAILABLE COPY

452

APPENDIX 8.5

MECHANISED EQUIPMENT FLEETS REQUIRED - BY PROVINCE

DESCRIPTION	ESTIMATED TOTAL VOL. REF.A 8.4	BULLDOZER - 50' PUSH PRODUCTION 4916 cfth (Ref A 7.11)			3-ELEV.SCRAPERS-800'HAUL PRODUCTION 7530 cfth (Ref A 7.11)			4-ELEV.SCRAPERS-2000'HAUL PRODUCTION 7600 cfth (Ref A 7.11)			5-10TON TRUCKS 1 MILE HAUL PRODUCTION 4550 cfth (Ref A 7.11)		
		%	Vol.cfth	No.Hours	%	Vol.cfth	No.Hours	%	Vol.cfth	No.Hours	%	Vol.cfth	No.Hours
PUNJAB													

MAIN CANAL.	6900725	10	690072	140	10	690072	92	40	2760290	363	40	2760290	607
BRANCH CANAL	8724920	10	872492	177	10	872492	116	40	3489968	460	40	3489968	767
DISTY/MINOR.	32152223	30	9645667	1962	20	6430445	854	20	6430445	846	30	9645667	2120
DRAINS.	2414644	30	724393	147	40	965857	128		0	0	30	724394	159
LINKS.	1508575	100	1508575	307		0	0		0	0		0	0
TOTAL	51701086		13441199	2734		8958866	1190		12680703	1669		16620318	3653
NUMBER OF FLEETS @ 1200 HRS/YEAR.				2.28			0.99			1.39			3.04
			SAY	2			1			1			3
SIND													

MAIN CANAL.	20698207	10	2069821	421	10	2069821	275	40	8279283	1089	40	8279283	1820
BRANCH CANAL	8251781	10	825178	168	10	825178	110	40	3300713	434	40	3300713	725
DISTY/MINOR.	18168493	30	5450548	1109	20	3633699	483	20	3633699	478	30	5450548	1198
DRAINS.	473933	30	142180	29	40	189573	25		0	0	30	142180	31
LINKS.	4185956	100	4185956	851		0	0		0	0		0	0
TOTAL	51778370		12673683	2578		6718271	892		15213694	2002		17172723	3775
NUMBER OF FLEETS @ 1200 HRS/YEAR.				2.15			0.74			1.67			3.15
			SAY	2			1			2			3
NWFP													

MAIN CANAL.	1424232	10	142423	29	10	142423	19	40	569693	75	40	569693	125
BRANCH CANAL	5515714	10	551571	112	10	551571	73	40	2206285	290	40	2206285	485
DISTY/MINOR.	4041133	30	1212340	247	20	808227	107	20	808227	106	30	1212340	266
DRAINS.	0	30	0	0	40	0	0		0	0	30	0	0
LINKS.	74342	100	74342	15		0	0		0	0		0	0
TOTAL	11055422		1980678	403		1502222	199		3584205	472		3988318	877
NUMBER OF FLEETS @ 1200 HRS/YEAR.				0.34			0.17			0.39			0.52
USE 1 FLEET OF TRUCKS AND LOADER.													

SOURCE : App. 8.4 , 7.11

CONSULTANTS ESTIMATE

BEST AVAILABLE COPY

453

APPENDIX 8.6

EQUIPMENT REQUIREMENTS - PUNJAB

(Ref.App. 8.5)

DESCRIPTION	BULLDOZER OPERATION 2 FLEETS	SCRAPER OPERATION 2 FLEETS	TRUCK/LOADER OPERATION 3 FLEETS	TOTAL REQUIREMENT	AVAILABLE FROM PID (Ref. A 8.1)	NET REQUIRED
BULLDOZER 165 HP	2	2	3	7	3	4
ELEVATING SCRAPERS 11 cy		7		7	10	
MOTOR GRADERS 150 HP	2	2	3	7	(2)	7
S.P.VIB.PADFOOT COMP. 13 T	2	2	3	9		9*
TRUCK - DUMP. 10 T	1		15	15	9	6
WATER 2500 g.	2	2	3	7	7	
FUEL 2500 g.		2		2	1	1
LUBE		2	1	3	2	1
LOWBED 35 T						2
FLAT DECK 10 T	1	2	3	6	2	4
FUEL TRAILER 500 g.	2			2		2
FRONT END LOADER 3.5 cy			3	3	1	2
TRACTOR 62 HP	2	2	3	7		7
blade, bucket, hoe						
PLATE COMPACTOR	2	4	6	12	21	
WATER PUMPS 4" with 150' hose	2	6	10	18		18
CEMENT MIXER 3 cft.	2	2	3	7		7
TRAILERS - PARTS		2	3	5		5
SERVICE		2	3	5		5
OFFICE		2	3	5		5
ELECTRIC SETS. 5 KW		2	3	5		5
PICK UPS.	2	2	3	7		7
JEEPS		2		2		2
LAND CRUISER (Proj. Mgr.)		1		1		1
BITUMEN PLANT.				4 UNITS		4 UNITS
SMOOTH WHEEL ROLLER						
HEATING TANK						
STORAGE TANK						
FRONT END LOADER 3 cy						
CHIP SPREADER						
DUMP TRUCK 10 T (2)						
ROTARY BROOM						
BITUMEN SPREADER						
PICK UP TRUCK (2)						
FLAT DECK TRUCK (2)						
FUEL STORAGE TANK.						

* Includes Compactors for traditional and private sector.

Source : as noted, Consultants Estimate

BEST AVAILABLE COPY

454

APPENDIX 8.7

EQUIPMENT REQUIREMENTS - SIND

(Ref.App. 8.5)

DESCRIPTION	BULLDOZER OPERATION 2 FLEETS	SCRAPER OPERATION 2 FLEETS **	TRUCK/LOADER OPERATION 3 FLEETS	TOTAL REQUIREMENT	AVAILABLE FROM PID (Ref. A 8.1)	NET REQUIRED
BULLDOZER 165 HP	2	3	3	8	1	7
ELEVATING SCRAPERS 11 cy		7		7	7	
MOTOR GRADERS 150 HP	2	2	3	7	(1)	7
S.P.VIB.PADFOOT COMP. 13 T	2	2	3	9		9*
TRUCK - DUMP. 10 T			15	15	5	10
WATER 2500 g.	2	2	3	7	5	2
FUEL 2500 g.		2		2		2
LUBE		2	1	3	2	1
LOWBED 35 T						2
FLAT DECK 10 T	1	2	3	6		6
FUEL TRAILER 500 g.	2			2		2
FRONT END LOADER 3.5 cy			3	3		3
TRACTOR 62 HP	2	2	3	7		7
blade, bucket, hoe						
PLATE COMPACTOR	2	4	6	12	153	
WATER PUMPS 4" with 150' hose	2	6	10	18		18
CEMENT MIXER 3 cft.	2	2	3	7		7
TRAILERS PARTS		2	3	5		5
SERVICE		2	3	5		5
OFFICE		2	3	5		5
ELECTRIC SETS 5 KW		2	3	5		5
PICK UPS.	2	2	3	7	14	
JEEPS		2		2	3	
LAND CRUISER (Proj. Mgr.)						
BITUMEN PLANT.				4 UNITS		4 UNITS
SMOOTH WHEEL ROLLER						
HEATING TANK						
STORAGE TANK						
FRONT END LOADER 3 cy						
CHIP SPREADER						
DUMP TRUCK 10 T (2)						
ROTARY BROOM						
BITUMEN SPREADER						
PICK UP TRUCK (2)						
FLAT DECK TRUCK (2)						
FUEL STORAGE TANK.						

* Includes Compactors for traditional and private sector.

** Table 8.5 requires 3 Fleets 12 cy Scrapers - Sind has 18 cy Scrapers - 2 Fleets O.K.

Source : as noted, Consultants Estimate

BEST AVAILABLE COPY

455

APPENDIX 8.8

EQUIPMENT REQUIREMENTS - NWFP

(Ref.App. 8.5)

DESCRIPTION	BULLDOZER OPERATION 2 FLEETS	SCRAPER OPERATION 2 FLEETS	TRUCK/LOADER OPERATION 3 FLEETS	TOTAL REQUIREMENT	AVAILABLE FROM PID (Ref. A 8.3)	NET REQUIRED
BULLDOZER 165 HP			1	1		1
ELEVATING SCRAPERS 11 cy						
MOTOR GRADERS 150 HP			1	1		1
S.P.VIB.PADFOOT COMP. 13 T			2	3*		3*
TRUCK - DUMP. 10 T			5	5		5
WATER 2500 g.			1	1		1
FUEL 2500 g.						
LUBE			1	1		1
LOWBED 35 T				1	.6	
FLAT DECK 10 T			1	1		1
FUEL TRAILER 500 g.			1	1		1
FRONT END LOADER 3.5 cy			1	1		1
TRACTOR 62 HP			1	1		1
blade, bucket, hoe						
PLATE COMPACTOR			2	2	2	
WATER PUMPS 4" with 150' hose			3	3		3
CEMENT MIXER 3 cft.			1	1		1
TRAILERS - PARTS						
SERVICE						
OFFICE						
ELECTRIC SETS. 5 KW						
PICK UPS.			1	1		1
JEEPS			1	1	1	
LAND CRUISER (Proj. Mgr.)						
BITUMEN PLANT.				1 UNIT		1 UNIT
SMOOTH WHEEL ROLLER						
HEATING TANK						
STORAGE TANK						
FRONT END LOADER 3 cy						
CHIP SPREADER						
DUMP TRUCK 10 T (2)						
ROTARY BROOM						
BITUMEN SPREADER						
PICK UP TRUCK (2)						
FLAT DECK TRUCK (2)						
FUEL STORAGE TANK.						

* Includes Compactors for traditional and private sector.

Source : as noted, Consultants Estimate

BEST AVAILABLE COPY

452

APPENDIX 8.9

ROAD OPERATING AND MAINTENANCE EQUIPMENT REQUIREMENTS

1. Ditch and Culvert

Grader - daily coverage 8 miles - twice / year.

Punjab - add 1
Sind - add 1
NWFP -----

Tractor with bucket/blade and 24" backhoe.

- daily coverage 3 miles - twice / year.
- effective daily coverage 1.5 miles = 330 mpyr.

Punjab - add 2
Sind - add 2
NWFP - add 1 due to remoteness of area.

Tractor trolleys. - contracted out.

Plate compactors - available.

Pick up. - add 2 each Punjab and Sind, 1 for NWFP.

Hand Tools - available.

2. Bituminous Surface.

Plant - available.

Dump Trucks - add 2 each Punjab and Sind, 1 for NWFP.

Pick up. - add 2 each Punjab and Sind.

3. Shoulders.

Bulldozer - adequate

Tractor with bucket/blade and 24" backhoe.

- daily coverage 6 miles - twice / year.
- effective daily coverage 3 miles = 660 mpyr.

Punjab - add 1
Sind - add 1
NWFP - add 1 due to remoteness of area.

Tractor trolleys. - contracted out.

Grader - adequate

Vibratory Compactor - adequate

Water Pumps - add 2 each Punjab and Sind, 1 for NWFP.

Pick up. - adequate

BEST AVAILABLE COPY

APPENDIX 8.9A

Consultants Estimate of

ROAD OPERATING AND MAINTENANCE COSTS - LOCAL CURRENCY - NWFP

12' BITUMINOUS SURFACE
28 ft EMBANKMENT

DESCRIPTION	NO.	UNIT. O & O Ref.A 7.9	Subtotal	LABOUR	TOTAL	DAILY COST 8 HOURS	AVG. MILES/DAY	AVG. COST/MILE	ANNUAL COVERAGE No.OF TIMES	ANNUAL COST Rs/mile
DITCH AND CULVERT										
GRADER.	1/4	377	94	19	113					
TRACTOR, Back hoe	1	148	148	19	167					
TRACTOR, trolley.	2	150	300	38	338					
PLATE COMPACTOR	2	20	40		40					
PICK UP	1	127	127	19	146					
HAND TOOLS	set									
MISC. LABOUR	4			32	32					
TOTAL					836	6688	3	2229	2	4459
BITUMINOUS SURFACE										
BITUMEN FLEET (less spreader) 5 ops. and broom) 10 lab.	1/3	1664	555	48	603					
PICK UP	1	127	127	19	146					
HAND TOOLS	set									
MATERIAL (Bitumen,Chips)										8835
Subtotal					749	6072	6	1012	3	3036
TOTAL										11871
SHOULDERS										
BULLDOZER	1/2	391	196	19	205					
TRACTOR, Loader	1	148	148	19	167					
TRACTOR, trolley.	2	150	300	38	338					
GRADER	1/3	377	126	19	132					
S.P.Vib.Compactor Padfoot	1/3	419	140	19	146					
PLATE COMPACTOR	4	20	80		80					
WATER PUMP	2	41	82		82					
PICK UP	2	127	254	38	292					
HAND TOOLS	set									
MISC. LABOUR	6			48	48					
Total					1490	11648	6	1941	2	3882
Total O & M Cost/Mi Per Year										20212
Add 15% OVERHEAD (ex.mat.)										1706
Sub Total										21918
CONTRACT MAINTENANCE										
Contracted at 1000 Rs/mo. for 3 mi.										4000
TOTAL										25918
									Say	25900

SOURCE : CONSULTANTS ESTIMATE.
Material App. 8.9D
O & O App.7.9A

BEST AVAILABLE COPY

458

APPENDIX B.9B

Consultants Estimate of

ROAD OPERATING AND MAINTENANCE COSTS - LOCAL CURRENCY - NWFP

20' SHINGLE SURFACE
22 ft EMBANKMENT

DESCRIPTION	NO.	UNIT. O & O Ref.A 7.9	Subtotal	LABOUR	TOTAL	DAILY COST 8 HOURS	AVG. MILES/DAY	AVG. COST/MILE	ANNUAL COVERAGE No.OF TIMES	ANNUAL COST Rs/mile
DITCH AND CULVERT										
GRADER.	1/4	377	94	19	113					
TRACTOR, Back hoe	1	148	148	19	167					
TRACTOR, trolley.	2	150	300	38	338					
PLATE COMPACTOR	2	20	40		40					
PICK UP	1	127	127	19	146					
HAND TOOLS	set									
MISC. LABOUR	4			32	32					
TOTAL					836	6688	3	2229	2	4459
SHOULDERS and SHINGLE										
BULLDOZER	1/2	391	196	19	205					
TRACTOR, Loader	1	148	148	19	167					
TRACTOR, trolley.	2	150	300	38	338					
GRADER	1	377	377	19	396					
S.P.Compactor	1	169	169	19	188					
WATER TRUCK	2	259	518	38	556					
PLATE COMPACTOR	4	20	80		80					
WATER PUMP	2	41	82		82					
PICK UP	2	127	254	38	292					
HAND TOOLS	set									
MATERIAL Shingle										49526
MISC. LABOUR	6			48	48					
					2352	11648	6	1941	2	3882
Sub Total										53408
Transport premium 10%										5341
Sub Total O & M Cost/mi Per Year										63208
Add 15% OVERHEAD (ex.mat.)										2052
Sub Total										65260
CONTRACT MAINTENANCE										
Contracted at 1000 Rs/mo. for 3 mi.										6000
TOTAL										71260
									Say	71300

SOURCE : CONSULTANTS ESTIMATE.

BEST AVAILABLE COPY

459

APPENDIX 8.9C

Consultants Estimate of

ROAD OPERATING AND MAINTENANCE COSTS - LOCAL CURRENCY - NWFP

12' WATER BOUND MACADAM
22 ft EMBANKMENT

DESCRIPTION	NO.	UNIT. O & O Ref.A 7.9	Subtotal	LABOUR	TOTAL	DAILY COST 8 HOURS	AVG. MILES/DAY	AVG. COST/MILE	ANNUAL COVERAGE No.OF TIMES	ANNUAL COST Rs/mile
DITCH AND CULVERT										
GRADER.	1/4	377	94	19	113					
TRACTOR, Back hoe	1	148	148	19	167					
TRACTOR, trolley.	2	150	300	38	338					
PLATE COMPACTOR	2	20	40		40					
PICK UP	1	127	127	19	146					
HAND TOOLS	set									
MISC. LABOUR	4			32	32					
TOTAL					836	6688	3	2229	2	4459
SHOULDERS and SHINGLE										
BULLDOZER	1/2	391	196	19	205					
TRACTOR, Loader	1	148	148	19	167					
TRACTOR, trolley.	2	150	300	38	338					
GRADER	1	377	377	19	396					
S.P.Compactor	3*	169	507	57	564					
WATER TRUCK	6*	259	1554	114	1668					
PLATE COMPACTOR	4	20	80		80					
WATER PUMP	6*	41	246		246					
PICK UP	2	127	254	38	292					
HAND TOOLS	set									
MATERIAL										28512
MISC. LABOUR	18*			144	144					
					4100	32800	6	5467	2	10933
Sub Total										39445
Transport premium 10%										3944
Sub Total O & M Cost/mi Per Year										47848
Add 15% OVERHEAD (ex.mat.)										2900
Sub Total										50748
CONTRACT MAINTENANCE										
Contracted at 1000 Rs/mo. for 3 mi.										6000
TOTAL										56748
									Say	56700

SOURCE : CONSULTANTS ESTIMATE.

* Water bound macadam requires more watering andd compaction than other surfaces, particularly in drier climates, therefore coverage has been increased 3 times for these maintenance units.

BEST AVAILABLE COPY

460

APPENDIX 8.9D

ROAD O & M - NWFP

Surface Maintenance Calculations

1. Bitumenous Surface - 32 ft. roadbed, 12' metalled surface.

a. Aggregate 350 Rs/100 cft. = 3.5 Rs/cft.

12 in deep x 12 ft. wide x 5280 ft x 3.5 Rs = 221760 Rs/mi.

b. Chips 235 Rs/100 cft. = 2.35 Rs/cft.

i. original construction 7.5 cft/100 sq.ft.

7.5 cft. x 12 ft. wide x 5280 ft/100 sq.ft.x 2.35 Rs = 11167 Rs/mi.

ii. resurfacing 2.5 cft./100 sq.ft every 4 years.

2.5 cft x 12 ft wide x 5280 ft/100 sq.ft. x 2.35 Rs/4 yrs = 931 Rs/mi.

c. Bitumen - 5000 Rs/t delivered = 5 Rs/kg.

i. original construction 67 lb /100 sq.ft. (30.4 kg/100 sq ft.)

30.4 kg x 12 ft wide x 5280 ft/100 sq.ft. x 5 Rs = 96307 Rs/mi.

ii. resurfacing 22 lb/100 sq.ft. (9.98 kg/100 sq.ft.)

9.98 kg.x 12 ft.wide x5280 ft/100 sq.ft.x 5 Rs/4 yr. = 7904 Rs/mi.

Annual Maintenance Cost of Materials.	b. ii	931	
	c. ii	7904	
	Total	8835	Rs/mi.

2. Shingle Surface - 22 ft. Roadbed, 20 ft shingle surface 8 inch depth.

Reshingle over the first 4 and next 6 years

Shingle 350 Rs/100 cft. = 3.5 Rs/cft.

20 ft wide x 5280 x .67 ft deep x 3.5 Rs x 2/10 yr = 49526 Rs/mi.

3. Water bound Macadam 22 ft. Roadbed, 12 ft. water bound macadam surface

Aggregate replacement 10%/year (Ref.1a) 22176 Rs/mi.

Stone dust - 10 cft/ 100 sq.ft. -50% each year.

- 200 Rs/100 cft = 2 Rs/cft.

12 ft. wide x 5280 ft/100 sq.ft. x 10 cft. x 2 Rs/2 = 6336 Rs/mi.

Total 28512 Rs/mi.

BEST AVAILABLE DOCUMENT

461

APPENDIX B.10

CRP EQUIPMENT REQUIREMENTS SUMMARY

DESCRIPTION		NUMBER OF UNITS EACH MODEL					UNIT PRICE	FOREIGN
		PUNJAB Ref A 8.6	SIND Ref A 8.7	NWFP Ref A 8.8	O & M Ref A 8.9	TOTAL	Ref A 7.9A US $ 1000	CURRENCY 1000 Rs
BULLDOZER	165 HP	4	7	1		12	163	1956
ELEVATING SCRAPERS	11 cy					available		0
MOTOR GRADERS	150 HP	7	7	1	2	17	164	2788
S.P.VIB.PADFOOT	COMP. 12T	9	9	3		21	102	2142
TRUCK - DUMP.	10 T	14	18	7	5	44	78	3432
WATER	2500 g.		2	1		3	70	210
FUEL	2500 g.	1	2			3	63	189
LUBE		1	1	1		3	70	210
LOWBED	35 T	2	2	1		5	150	750
FLAT DECK	10 T	12	14	3		29	44	1276
FUEL TRAILER	500 g.	2	2	1		5	9	45
FRONT END LOADER	3.5 cy	16	7	2		15	150	2250
TRACTOR	62 HP	7	7	1	8	23	64	1472
blade, bucket, hoe								
PLATE COMPACTOR						available		0
WATER PUMPS 4" with 150' hose		18	18	3	5	44	3	132
CEMENT MIXER	3 cft.	7	7	1		15	3	45
TRAILERS - PARTS -	equipped	5	5			10	15	150
SERVICE	equipped	5	5			10	18	180
OFFICE	equipped	5	5			10	12	120
ELECTRIC SETS.	5 KW	5	5			10	8.5	85
Subtotal								17432
PICK UPS.	1/2 Ton	15	8	3	9	35	19	665
JEEPS CJ-7		2				2	17	34
LAND CRUISER		1				1	24	24
Subtotal								723
BITUMEN PLANT. (9)								
SMOOTH WHEEL ROLLER						available		0
HEATING TANK		4	4	1		9	84	756
STORAGE TANK		4	4	1		9		
CHIP SPREADER		4	4	1		9	86	774
ROTARY BROOM		4	4	1		9	10	90
BITUMEN SPREADER		4	4	1		9	80	720
FUEL STORAGE TANK.		4	4	1		9	15	135
SubTotal								2475
TOTAL							US $ 1000	20630
							MRs.	353.19

SOURCE : as noted, CONSULTANTS ESTIMATE

BEST AVAILABLE DOCUMENT

462

APPENDIX 8.10A

CRP EQUIPMENT REQUIREMENTS SUMMARY

REDUCED BUDGET - 35% Contractor Involvement

DESCRIPTION		TOTAL	UNIT PRICE Ref A 7.9A US $ 1000	FOREIGN CURRENCY 1000 MRs
BULLDOZER	165 HP	12	163	1956
ELEVATING SCRAPERS	11 cy	available		0
MOTOR GRADERS	150 HP	17	164	2788
S.P.VIB.PADFOOT	COMP. 12T	21	102	2142
TRUCK - DUMP.	10 T	18	78	1404
WATER	2500 g.	3	70	210
FUEL	2500 g.			0
LUBE				0
LOWBED	35 T			0
FLAT DECK	10 T	18	44	792
FUEL TRAILER	500 g.			0
FRONT END LOADER	3.5 cy	9	150	1350
TRACTOR	62 HP	8	64	512
blade, bucket, hoe				
PLATE COMPACTOR		available		0
WATER PUMPS 4" with 150' hose		44	3	132
CEMENT MIXER	3 cft.			0
TRAILERS - PARTS -	equipped			0
SERVICE	equipped			0
OFFICE	equipped			0
ELECTRIC SETS.	5 KW			0
Subtotal				11286
PICK UPS.	1/2 Ton	35	19	665
JEEPS CJ-7		2	17	34
LAND CRUISER		1	24	24
Subtotal				723
BITUMEN PLANT. (9)				
SMOOTH WHEEL ROLLER		available		0
HEATING TANK		9	84	756
STORAGE TANK		9		
CHIP SPREADER		9	86	774
ROTARY BROOM		9	10	90
BITUMEN SPREADER		9	80	720
FUEL STORAGE TANK.		9	15	135
SubTotal				2475
TOTAL			US $ 1000	14484
			MRs.	247.97

SOURCE : as noted, CONSULTANTS ESTIMATE

463

APPENDIX B.11

ESTIMATE OF SPARE PARTS REQUIREMENT

DESCRIPTION		No. OF UNITS SUPPLIED Ref. B.10	PARTS COST PER HOUR Rs. Ref 7.9A	F.E.*COST PER HOUR 85 %	EST.PARTS USED OVER 5 YEARS WITH OVERHAUL US $ 1000	EST.PARTS USED OVER 5 YEARS MAINTENANCE and PM only US $ 1000
BULLDOZER	165 HP	12	140	6.95	601	210
MOTOR GRADERS	150 HP	17	112	5.56	851	238
S.P.VIB.PADFOOT	COMP. 13 T	21	87	4.32	653	229
TRUCK - DUMP.		44	67	3.33	1054	369
WATER/FUEL		6	56	2.78	120	42
LUBE		3	48	2.38	51	18
LOWBED		5	103	5.11	230	64
FLAT DECK		29	38	1.89	394	138
FUEL TRAILER		5	5	0.25	9	3
FRONT END LOADER	3.5 cy	15	128	6.36	686	240
TRACTOR	62 HP	23	55	2.73	452	158
PUMPS/MIXER		44+15= 59	4	0.20	70	30
TRAILERS (NOMINAL)		30	2	0.10	21	8
ELECTRIC SETS.	5 KW	10	3	0.15	11	4
PICK UPS.		35	25	1.24	209	109
JEEPS CJ-7		2	29	1.44	14	7
LAND CRUISER		1	32	1.59	8	4
BITUMEN PLANT		9	504	25.02	811	568
TOTAL					6244	2439
PROTECTIVE STOCK 1/2 DIFFERENTIAL						1904
RECOMMENDED PARTS STOCK					SAY	4343
						4350

SOURCE : CONSULTANTS ESTIMATE
* US $ 1.00 = 17.12

BEST AVAILABLE DOCUMENT

464

APPENDIX B.11A

ESTIMATE OF SPARE PARTS REQUIREMENT

REDUCED BUDGET - 35% Contractor Involvement

DESCRIPTION		No. OF UNITS SUPPLIED Ref. B.10	PARTS COST PER HOUR Rs. Ref 7.9A	F.E.*COST PER HOUR 85 %	EST.PARTS USED OVER 5 YEARS WITH OVERHAUL US $ 1000	EST.PARTS USED OVER 5 YEARS MAINTENANCE and PM only US $ 1000
BULLDOZER	165 HP	12	140	6.95	601	210
MOTOR GRADERS	150 HP	17	112	5.56	851	238
S.P.VIB.PADFOOT	COMP. 13 T	21	87	4.32	653	229
TRUCK - DUMP.		18	67	3.33	431	151
WATER		3	56	2.78	60	21
LUBE				0.00	0	0
LOWBED				0.00	0	0
FLAT DECK		18	38	1.89	245	86
FUEL TRAILER				0.00	0	0
FRONT END LOADER	3.5 cy	9	128	6.36	412	144
TRACTOR	62 HP	8	55	2.73	157	55
PUMPS/MIXER			4	0.20	0	0
TRAILERS (NOMINAL)				0.00	0	0
ELECTRIC SETS.	5 KW			0.00	0	0
PICK UPS.		35	25	1.24	209	109
JEEPS CJ-7		2	29	1.44	14	7
LAND CRUISER		1	32	1.59	8	4
BITUMEN PLANT		9	504	25.02	811	568
TOTAL					4450	1822
PROTECTIVE STOCK 1/2 DIFFERENTIAL						1334
RECOMMENDED PARTS STOCK					SAY	3156
						3200

SOURCE : CONSULTANTS ESTIMATE
* US $ 1.00 = 17.12

BEST AVAILABLE DOCUMENT

465

APPENDIX 8.12 *

EXCHANGE TRANSMISSION BILLING

D9L 14Y2800 (9P2213 Transmission)

SERVICE PLUS PRICE - $7760.30 (minimum price)

Includes-Must Do Parts
Must Do Labour
User Fee

Extra -Charges for core items not up to standard.

TRANSMISSION

Core Standard: Must be returned complete, same configuration with no visible external damages, nor subjected to fire, water or chemical. Cases and housings previously damaged and repaired in a manner not meeting Finning's standards, will be replaced and additionally billed.
Exchange price includes dismantel and assemble labour; gaskets, seals, bearings, lock -
All other work or parts necessary to complete repairs to be additionally billed.

The concept is to customize the cost of repair to the condition of the customers cores and to not penalize customers with good cores versus cores that are basket cases.

* "Example of one Caterpillar Dealer's Component Exchange Plan using a D9L Transmission as an example."

GWC:mp

APPENDIX 8.13

PROVISION FOR FINANCIAL ASSISTANCE TO CONTRACTORS

EQUIPMENT REPAIR / PURCHASE

Some qualified contractors (say 9) may wish to expand their fleet or overhaul existing equipment to participate in the CRP.

An estimate of repairs has been made, as a provision, to assist them with foreign exchange allocated for parts and technical assistance to supervise the parts usage.

1.

DESCRIPTION	NUMBER FOR EACH OF 10 CONTRACTORS	No. OF UNITS	Est. Cost OF UNIT * OVERHAUL US $ 1000	TOTAL US $ 1000
BULLDOZER 200 HP +	1	9	100	900
TRUCK - VARIOUS	2	18	18	324
GRADERS	1	9	50	450
HAULERS (scraper)	1	9	80	720
FRONT END LOADER	2	18	40	720
TRACTORS 60 HP	2	18	12	216
MISC. SUPPORT VEH.	2	18	10	180
SUB TOTAL				3510
CONTINGENCY	10%			351
TOTAL				3861
PARTS COMPONENT (Eligible for FE Support)	60%			2317

2. TECHNICAL ASSISTANCE TO SUPERVISE AND CONTROL USE OF PARTS ON CRP DESIGNATED EQUIPMENT.
   3 TECH. SPECIALISTS 3 MOS. EA. @ $ 60.000 — 180

* Overhaul is made up of 60% Parts, 40 % Labour.

Source : Consultant's Estimate.

467

APPENDIX 9 ECONOMIC EVALUATION

9.1 Introduction

The purpose of this appendix to Chapter 9 of the report on the Canal Road Feasibility Study is not to create an independent document, but rather to support Chapter 9 by explaining procedures, justifying assumptions, discussing alternative and controversial points, and presenting calculations. These functions of the Appendix are especially relevant where matters are highly technical or so complicated or voluminous as to pose an obstacle to easy reading or prompt gaining of an overview. The Consultants believe that those are the objectives of most readers of the main text (Volume I), so the "heavier" parts have been moved to the Appendix. Parts of Chapter 9 are adjudged to need no further elaboration; in such cases the paralleling section of Appendix 9 is void. This is the case with sections 9.3, 9.5, 9.7, and 9.9 through 9.13.

9.2 Methodology

9.2.1 Projections of Agriculture's Future

In the 13 irrigation systems affected by this project, the agriculture of the future will be developed from the foundation of land and water resources, technology and skill of present day agriculture. New technologies will be introduced and popularized; new varieties will

replace older ones; farmers will gain in skill and management ablity; economic forces will provide incentive to use available technology and resources in varying proportions. The effect of changes in these factors over the next several decades probably will be to increase yields and production. However, changes will come about little by little; really striking changes in agriculture seldom happen rapidly.

The current crop areas and yields for the major crops constitute the statistical base for projections in this project. Yields for each province are projected to improve in all cases, but at rates and to levels that vary depending on the historical pattern of yield and production changes, and the consultants' evaluation of these and a complex of the other factors including population, resource capability, world trends in production, new agricultural programmes and their anticipated impact, and market forces. All of these factors in combination are expected to result in "normal growth" as projected in Section 9.6 and shown in Appendix Tables 9.7.1 - 13.

Normal growth in this case is considered to include the effect of rehabilitation of the canals. While rehabilitation of the canal may in some cases result in greater capacity for water delivery than exists at present, the usual standard for rehabilitation is to stablize the canal at the greater of design capacity or

current (enlarged through erosion) capacity. Thus little or no additional water flow will be available, so that the present area of crops and the present level of yields and production will be maintained. Rehabilitation will signficantly reduce the likelihood of canal banks collapsing or being overtopped, and will assure more regular and more dependable irrigation, but the primary impact of the rehabilitation, in the view of the consultants, will be to prevent or arrest a decline in production, rather than to bring about an increase. The factors that have been causing yields and production to increase over the last several decades will continue to have some effect, and as a result there will be a continuation of "normal" growth.

9.2.2 Impacted Areas

The analysis of impact of the Canal Roads Project is to be done by systems; i.e. the effect of the new roads in each system is to be weighed against the cost of the roads in that system. The systems range in area from 98000 to 1083000 hectares, equivalent to a range of 1 to 11. Road systems in the districts used to represent the systems range from 1 km of road per 5.05 square km of area to 1 km of road per 43.61 square km. New roads proposed make small or large differences in the roads network: i.e. 45 km of new road to be added to the 320 km road network in Marwat system provides a 14 percent

increase while 296 km of new roads added to 100 km existing roads in Jamrao and Mithrao system will nearly quadruple the network of high-type roads. Under conditions where the need for roads varies so greatly, as indicated by the figures just cited, it would be desirable to have firmly established measures for determining the benefits to be obtained from new roads. But only the general principle is unequivocal: better roads must lead to better transport, facilitate marketing, better and cheaper input availability and thus --eventually-- more market-conscious, input-intensive, higher-yielding agriculture.

The distance from the new roads to which benefits will extend, and the amount of these benefits at any given distance, depends on many factors and can only be estimated. In this study, the consultants estimated that there would be some impact for a distance of five miles on either side of the road. Impacted area was outlined on maps at a scaled distance of five miles from the new roads, and the enclosed area, measured by planimeter, was considered to comprise the area affected by those roads. This method eliminated the double counting that would have resulted from simply assuming the impacted area to be a 10 mile-wide band as long as the combined length of all the new roads.

9.2.3 Major Crops

Cropping patterns vary from one part of Pakistan to another. The major crops were used as indicators of agricultural production, and given the constraints under which the study was done, such short cuts were essential. However the prorating of district characteristics to impacted areas results in disturbing variations in the proportion of the impacted area from which agricultural production and benefits may be derived. For Jamrao- Mithrao system in Sind and for Paharpur system in NWFP, only about 9 percent of impacted area is devoted to the production of major crops, whereas the proportion rises to 73 percent is Depalpur and 85 percent in Upper Swat system. These variations reduce the indicated impact on agriculture by limiting the area affected. Logically, one would not expect so low a proportion of land being put to major uses, in the immediate vicinity of important irrigations system. Unfortunately a better systems for determining the affected area and its use could not be implemented within the constraints of time and personnel.

9.2.4 Computers

Most of the tables in this appendix and several in Vol.1 Chapter 9 were produced by computer using Lotus 123 soft ware. Computerization made possible a diversity, complexity and accuracy of calculations that could not

have been done by hand within the time and resource constraints of the study. One consequence of this, however, is occasional apparent (but not real) error. The computer carries and uses in calculations more digits than can be shown in tables, where numbers are rounded to fit space available. Therefore, addition or multiplication of (rounded) numbers printed in tables occasionally produces sums or products that disagree with those printed. The consultants consider this a small price to pay for the speed and accuracy gained in exchange.

9.3 Discounting

This topic was discussed in Volume I, Chapter 9.3, and no supplementation is required.

9.4 Financial and Economic Prices

The differentation of financial and economic prices and their uses were discussed in Volume I, Chapter 9.4. The prices of agricultural commodities actually used in the analysis are presented in Table 9.1.

9.5 Evaluative Measures

The Evaluation Measures of Net Present Worth, Benefit Cost Ratio and Internal Rate of Return are discribed and discussed in Volume I, Chapter 9.5. No further discussion is required.

Table 9.1

Financial and Economic Prices of Agricultural Commodities

(Rupees per metric tonne)

Commodity	Financial			Economical		
	Punjab	Sind	NWFP	Punjab	Sind	NWFP
Wheat	2000	2000	2000	1678	1748	1633
Rice (Paddy)						
IRRI	1325	1325	1325	-	1321	1245
Basmati	2400	2400	2400	2916	-	-
Cotton				5172	5242	-
Sugar Cane	241.25	245.25	234.50	189	179	189
Maize	2125	2125	2125	-	-	1409

Source : Financial prices, Economic Survey of Pakistan 1985-86

Economic prices, Consultants' estimates

474

9.6 Direct Benefits

Implementation of the Canal Roads Project will have a number of important effects on agriculture and on other activities in the affected irrigation systems. Five of the effects are discussed and the benefits quantified in the following sections 9.6.1 through 9.6.5, as follows :

9.6.1 Increased Agricultural Production

9.6.2 Reduction in Off-Road Hauling Costs

9.6.3 Reduction of Canal Maintenance Costs

9.6.4 Savings in Vehicles Operating Costs (VOC)

9.6.5 Time Savings

9.6.1 Increased Agricultural Production

Calculations and assumptions leading to quantification of increases in agricultural production and resultant benefits from the canal roads project are described and discussed in this sections.

Population is one of the important dimensions of the irrigation systems and impacted areas. Population data are presented in Table 9.2, beginning with area, rural population, density in persons per square kilometer, and rate of population growth for districts selected as representatives of the irrigation systems. The density of the district (persons per square km) was assumed to apply to the impacted area. This density was multiplied

by area in square kilometers (see discussion of area in section 9.2), thus providing a Base Year population for the relevant impacted area.

Population growth rates of the 13 districts varied exceedingly: from 1.33 percent per year for Faisalabad district to 4.70 percent for Tharparkar district. At the latter growth rate, population would double in about 15 years or quadruple during the 30 years for which benefits will be calculated. While it is desirable to measure the effect of the project allowing for difference in the systems, an exponential growth rate should not be the tail that wags the analytical dog. The population growth rates assumed to apply to the system over the next three decades were reduced or increased from district rates to come within the range of 2.5 to 3.5 percent. Resulting growth rates are shown in Table 9.2.

Area and production of the major crops were obtained and yields calculated for the representative districts (Table 9.3). The area-wise relationship among the crops, and between crops and the gross area of the district, were assumed to apply to systems and to the impacted areas (Table 9.4). The low proportion of crops in certain districts probably should have been adjusted at this stage, had there been any indication at that time of either a need for adjustment or a basis for it.

The total area of major crops in the impacted area was held constant over the life of the project, but shifts in cropping pattern were permitted. Where yields of a crop were particularly high or low, area of that crop was adjusted where possible to keep pace with the farmers' normal response of expanding the area of profitable crops at the expense of those that are less profitable.

In general, district yields were assumed to apply to systems. In a few cases, yields of certain crops were adjusted to bring them in line with consultants' observations of production levels in the impacted areas. Yields of individual crops were also adjusted over the life of the project. These adjustments constitute the consultants' judgement of what is likely to happen under a normal growth scenario in the concerned irrigation systems. The adjustments were made on the basis of present yields in the various districts and elsewhere in Pakistan, local resource potentials, research results and yield achievements in other countries, extension programmes, and farmer acceptance of new technologies. However, in view of uncertainties about the effects of all these factors over several decades, projections of changes in yields are limited to 20 years, after which time yields are assumed to remain stable. Yields for the base year and year 20 of the project (under normal growth) are shown in Table 9.5.

The foregoing estimates of area and yield for the 13 systems are combined in Table 9.6, which presents production estimates for the base year. Table 9.7.1-13 elaborate production estimates year by year for 30 years for each system, using the area and yield estimates as described in the foregoing paragraphs. This is characterized as the "Normal Growth" scenario.

Normal growth is what will take place without the Canal Roads Project. The project design and evaluation team believes that improving the roads network will have a favourable impact on agricultural yields, through a rather complicated chain of events involving better transport, improved financial incentives, and farmer response by using more inputs. The magnitude of this impact varies from 10 to 35 percent increase over the normal growth production levels in the twentieth year, as shown in Table 9.8. A fixed percentage increase each year, and the compounding and skyrocketing yields inherent in such growth rates, were carefully avoided; agriculture, even more than most activities, is characterized by diminishing rather than increasing marginal returns.

Production of each crop over a thirty year period under the "Accelerated Growth" scenario is presented for each system in Table 9.9.1-13. The mechanics of calculation were as follows: the yield level was set for year 10 or

year 20 or both at a given percentage over normal growth, and yields for intervening years were interpolated. For the first several years, less than a full share of yield increase was allowed. The schedule established for road construction was 15, 20, 25, 25, and 15 percent in the five years of construction. No benefits will accrue until a given section of road is completed and opened for use. The economists assumed that the same percentages of roads will be completed, so that benefits were phased in at the same rate as construction but lagged one year.

Two questions may be raised about this phase-in schedule, regarding when it begins and how long it lasts. Assumptions about completion rate may be over optimistic, given the complex nature of road building. Perhaps the benefit scheduled should have been lagged two years instead of one. Also it is likely that the full benefits from any given stretch of road will be felt only after several years, especially in the case of impact as circuitous as the effect of a paved road on the yield of crops from nearly fields. The two-stage phasing-in necessitated by a growth-curve progression of impact from an incremental construction schedule presented technical difficulties that, under pressure of time, the consultants had to side-step.

In Table 9.10.1-13, incremental production of each crop by year is calculated by subtraction. The value of each

crop is calculated at economic prices, and totalled. The net value of this production, after subtraction of costs of production, constitutes the maximum benefit attributable to the project. In Pakistani practice approximately half the realized value of the crop, on the average, is considered to be net profit or, in more detailed analysis, return to family labour and management. Thus up to almost half the value of the increase in production could be claimed as project benefits. However, such a claim would place a zero value on the expansion of the network of transporters and the additional merchants and produce buyers whose efforts contribute to the improved incentive for farmers, and thus to the final results. On balance, 20 percent of the value of the increase in production is attributed to the canal roads and taken as a benefit in economic analysis.

9.6.2 Reduction in Off Road Hauling Costs

Construction of additional roads in the irrigation systems will inevitably reduce the average distance from field to road. Measurement and evaluation of this reduction could be done through a case-by-case analysis of affected fields or farmers. Insufficient resources to undertake the necessary field work precluded a case-by-case approach for this study. The alternative was to analyze an average situation based on a model with assumed characteristics. That alternative was followed,

and the roads characteristics are developed and presented in Table 9.11.

Table No.9.12

Disposition of Sugarcane, by Systems

(Percentage)

System	Processed at Factory	Processed or Used in Field	Hauling Equivalent of Field Use	Proportion of Tonnage	
				Hauled	Not Hauled
Jhang	60	40	4	64	36
Gogera	50	50	5	55	45
Depalpur	60	40	4	64	36
Mailsi	0	100	9	9	91
Nasir	90	10	1	91	9
J & M*	20	80	7	27	73
Gotki	25	75	7	32	68
Rohri	15	85	8	23	77
Dadu	70	30	3	73	27
Kabul	40	60	5	45	55
Paharpur	30	70	6	36	64
Marwat	80	20	2	82	18
Upper Swat	90	10	1	91	9

* Jamrao and Mithrao

Source : Consultants' Estimates

Data on area, roads, and other matters are available for political subdivisions (districts, tehsils, etc) but not for irrigation systems. Highway Departments and other sources provided data on high type roads in the representative distcits, as well as the area of the districts. This permitted calculation of road density (area per km of road), which was assumed to apply to the impacted area of the relevant irrigation system. Length of roads network was calculated from this density figure and impacted area (determined by planimeter measurement of maps; see Appendix sections 9.2 and 9.6.1).

Farmers in Pakistan almost universally live in villages rather than on their land. The villages are usually surrounded by cropland, and seem to be located more or less at random with respect to paved roads. Most of the villages observed were located at varying distances from, rather than on, high-type roads. The pattern of transport for most of the produce hauled from the fields to market appears to be by way of the village. Rarely is the village the destination for the crop, although it may be the first stop; the government procurement centre at which grain is sold, or the sugar mill to which cane is hauled, is usually at a point apart from and several kilometers distant from the village of production. In transporting produce from field via the village to the market, procurement centre or mill,

482

nearly all produce must be moved over earthen tracks or katcha roads for some portion of the trip.

The distance from farmers' field to selling or delivering point will not be materially changed by construction of new roads, as most of these centers and mills are already located to provide convenient access to paved roads. However the new roads will, on the average, reduce the distance from field to paved road and/or from village to paved road. Therefore, while distance to market will not be affected, the proportion of that distance that is off-road will be reduced by the Canal Roads Project.

The amount of that reduction can be calculated as follows. A rural region of known area and with a roads network of known length can be visualized as and equated to a strip of land as long as the length of the roads network and of whatever average width ("w" Km) is needed to provide the proper area. If the road passes through the centre of this strip of land, the boundaries will be w/2 km distant from the road, and the average distance from the road to any given field or point will be w/4. Using this approach, the average distance from field to road was calculated for the impacted area, both with existing roads and with the expanded road network as augmented by CRP.

For example, in Jhang system the impacted area is 4810

square kilometers (481000 hectares) and the roads network has 456 km of road. This is equivalent to a strip of land 456 km long and 10.55 km wide. In such a strip, with the road down the center, the boundaries would be, on the average, 5.28 km from the road. The strip of land on each side of the road would be from 0 to 5.28 km distant from the road, with an average distance of 2.64 km. Addition of 213 km of roads results in a total length of 669 km. The same impacted area (4810 sq.km) now represents a strip 669 km long by 7.19 km wide. The boundaries now average 3.59 km distant from the road and the average field is 1.80 km distant, or 0.84 km closer than before.

The difference between the two average distances (0.84 km) is the distance or length of off-road hauling that, thanks to the project, is changed to paved-road hauling.

The reduction in off-road hauling means a savings in cost of hauling, since transport of goods is cheaper over paved roads than for the same distance over katcha roads. Whether the mode of transport is animal-drawn cart, tractor-trolley, or truck, the wheels roll more easily and less power is required for a given speed on paved roads than on typical katcha roads. The result of higher speed, easier draft, lowered fuel cost and reduced wear and tear is, inevitably, lower cost per ton-mile or tonne/kilometer of transport.

To quantify the cost of transport, a survey was taken of suppliers and purchasers of rural transport in each of the three provinces concerned. Results were as shown below:

Costs of Hauling Farm Produce

(Rs. per tonne per kilometer)

	Province		
	Punjab	Sind	NWFP
Transport over katcha roads	10.7	5.98	9.3
Transport Over pacca roads	4.8	2.18	4.8
Savings due to paved roads	5.9	3.8	4.5

Source : Survey by Consultants

The savings from transporting produce and inputs over paved roads instead of earthen tracks are striking. These savings can be applied to the relevant distances as already calculated, but the tonnage to be hauled must first be calculated.

Tonnages for hauling include most but not all of the production calculated in section 9.6.1. All of the cotton is included. So is most of the sugar cane, except that which is processed in the fields, used for animal forage, or retained for replanting cane fields.

485

Percentages of cane not hauled vary by systems, depending on the uses made of the cane. Disposition of sugar cane is shown in Table 9.12, and the proportions hauled or not hauled figure in the calculations in Tables 9.13.1-13.

For cereals, which can be aggregated for ease of calculation, 7.5 percent is used as seed or feed or is lost and so is not hauled to market. Cereals also supply human food needs, estimated as 200 kg per capita per year. Accordingly, local consumption of cereals is calculated as population x 0.2 tonne. Tonnage of available cereals, after the reduction for seed, feed and loss, is further reduced by the amount of local consumption, and the balance is hauled to market.

In some systems with large populations and small production of cereals, local production is insufficient to supply local consumption needs, so the balance is a negative quantity. This represents the amount of cereals that must be shipped in from other grain-producing regions, so whether the balance is positive or negative it represent the amount that must be hauled -- if not to the field, at least to the village so that a comparable distance of off-road transport is involved.

In addition, agricultural inputs must be hauled to the fields. Their tonnage is estimated at 1.2 percent of total agricultural production.

Savings from Combining Canal Rehabilitation and Road

Construction. A feasibility study of the irrigation system rehabilitation project prepared by NESPAK in 1986 produced estimates of the cost of rehabilitating canals in three provinces. Overall cost of the project ranged from Rs. 145,513 per mile in Punjab to Rs.681,379 in NWFP; the cost in Sind was intermediate at Rs.178,362 per mile.

With over 10000 miles of channels needing rehabilitation, this is clearly an expensive proposition, deserving of careful attention to ways to improve the cost - effectiveness.

If such canal rehabilitation is followed by construction and metalling of a road on the canal bank, certain economies should result to one or both efforts. The canal rehabilitation work would not need to include construction or reconstruction of an inspection path. Establishment of proper level and width of the canal

487

Net tonnage for hauling, in summary, includes the cereals balance, which may be hauled out to market or hauled in for consumption; all of seed cotton; the sugarcane which is not processed in the field or used as forage or for replanting; and the inputs. This net tonnage is subject to savings of Rs. 3.8 to Rs. 5.9 per tonne-kilometer for transport over distances ranging from 0.18 km to 8.16 km. These savings, constitute the second benefit of the CRP presented in Table 9.13.1-13.

9.6.3 Canal Rehabilitation and Road Construction

The canal system has deteriorated in recent years due to lack of proper maintenance. A major reason for lack of maintenance has been the ever-increasing gap between the irrigation water charges collected from the farmers and the cost of maintenance. Usually the maintenance budget has been spent on head works and main canals, with little or nothing remaining for smaller channels. As a result, their carrying capacity has gradually diminished due to siltation, especially in the tail reaches. Long-deferred maintenance and rehabilitation also has resulted in frequent breaches in distributories and minors, flooding the fields and interrupting the supply of irrigation water. To overcome this constraint on agricultural development, the Government of Pakistan gave specific attention in the Sixth Five Year Plan to the following objectives :

- To improve the water delivery efficiency of canals

and drains by remodelling.

- To achieve equitable distribution of water by rehabilitating the existing irrigation and drainage system.
- To improve the overall working efficiency of irrigation and drainage system by appropriate training of personnel and re-organizing the institutional framework.
- To achieve optimal use of water by introducing command water management, and
- To achieve high irrigation efficiency by reducing water losses through an accelerated On-Farm Water Management Programme.

The government has delineated a phased programme to rehabilitate 39000 miles of canals and 3700 miles of drains for which funds have been provided. In addition to rehabilitation of civil works, it is also envisaged in this project to provide machinery and equipment to facilitate operational and maintenance works in all the provinces.

To make canal rehabilitation more economical, metalling the patrol roads on the banks of the canals and opening them to public use is also being considered, The costs of canal rehabilitation with and without road construction are analysed in the present study, to judge the economic efficiency of the canal rehabilitation.

Savings from Combining Canal Rehabilitation and Road Construction. A feasibility study of the irrigation system rehabilitation project prepared by NESPAK in 1986 produced estimates of the cost of rehabilitating canals in three provinces. Overall cost of the project ranged from Rs. 145,513 per mile in Punjab to Rs.681,379 in NWFP; the cost in Sind was intermediate at Rs.178,362 per mile.

With over 10000 miles of channels needing rehabilitation, this is clearly an expensive proposition, deserving of careful attention to ways to improve the cost - effectiveness.

If such canal rehabilitation is followed by construction and metalling of a road on the canal bank, certain economies should result to one or both efforts. The canal rehabilitation work would not need to include construction or reconstruction of an inspection path. Establishment of proper level and width of the canal bank in canal rehabilitation would not need to be redone as a part of road construction. The savings in rehabilitation cost or in construction cost was envisioned by the consultants as either a reduction of the investment cost of the canal roads project, or a form of benefit.

Attempts to calculate that benefit or cost reduction were unproductive. Engineers' estimates of cost of the

canal rehabilitation did not separate out the costs of the inspection path, and roads engineers did not feel that allowance for work that might have been already done by another agency was justified. In the case of compaction, it was felt that the base of the patrol road would have to be torn up and recompacted to greater density, and such costs would offset whatever other savings there might be.

Therefore, it is concluded that savings in investment costs resulting from combining canal rehabilitation and road construction will be insignificant. The possibility remains of savings in costs of operation; this will be examined in the following section.

Budgeted Maintenance Cost (O&M)

Operation and Maintenance costs are the expenditures incurred to maintain the structures in satisfactory working condition. These expenditures include the salaries of the employees, any materials used in maintenance and repairs, and costs of any equipment used.

The operation and maintenance of the entire irrigation system, from its origin to tail of the distributories and minors, is the responsibility of PIDs. The maintenance of roads is the responsibility of District Councils for rural roads, and of the Highway Department

for both the sugar access roads (funded by the sugar industry) and the highways. The roads along the irrigation system, like any other roads, would normally be constructed and maintained by the Highway Department. However in this case the PIDs have expressed the desire to take responsibility for both construction and O&M; a final decision in this regard will be made by the provincial governments. The analysis in this study considers overall costs without regard to which ministry bears those costs.

O&M costs for canals and canal banks have traditionally (and properly) included a considerable segment that is spent on maintaining or attempting to maintain the katcha patrol road on the canal bank. If this road is upgraded and metalled, the O&M costs of the road would undoubtedly be greater than the amount the PIDs spending on maintenance of service roads.

However, if these O & M costs for the paved road were considered road cost, not chargeable to canal maintenance, there would be a savings in canal O & M. Conceptually, a road has its own O&M cost; certainly if the road were located elsewhere than on the canal bank there would be no question about road maintenance being a road cost. If that road happens to be located alongside a canal, and serves the purposes of the PID without separate cost, a savings would be recognized.

Expenditures for canal maintenance are established in budgets by "yardsticks" based on past maintenance costs. Such yardsticks for Punjab (also applicable to NWFP) and Sind are shown in the following table.

CANAL MAINTENANCE COSTS

	(Rs./mile/year)
PUNJAB	
Main Canals and Branches with Discharge upto 6000 Cs.	9,500
-do- from 6000 - 10,000 Cs.	10,500
-do- above 10,000 Cs.	13,000
Link Canals upto 10,000 Cs	9,900
More than 10,000 Cs.	15,000
Lined Channels	15,000
Distributories and Minors	3,500
SIND	
All canals	16,731
Minors/Disty and Drains	8,757

Source: Irrigation Departments, Punjab and Sind.

These figures do not include the costs of a labour gang whose main duties have been maintenance of the inspection path. One man per two miles of road is employed on a permanent basis for this purpose, at a cost of Rs. 4,800/- per mile. Thus the total annual cost

of maintenance in Punjab ranges from Rs.8300/- to Rs.17800/- per mile. However, for institutional and budgetary reasons, the labour gang is not considered by PID to be a part of canal maintenance costs, and in any case the expense for the labour gang will not be curtailed if a metalled road is built. Therefore, the yardsticks are accepted as the cost of canal maintenance.

Canals and drains alongside which roads are proposed to be built were categorized as to size (design capacity) to determine the appropriate yardstick, which was then multiplied by the length of the road. These costs were aggregated by systems, and then converted to economic costs. The labour component, 40 percent of total O&M costs, has a shadow wage rate of 80 percent of the financial cost. Economic cost, therefore, is less than financial or budget yardsticks cost by 20 percent of the 40 percent labour component. In effect, economic O&M cost is about 92 percent of financial O&M cost for canals.

With the metalling of the canal bank roads, some proportion of the yardstick costs related to earth work and watching and establishment costs of the service roads will be saved. Such savings amount to 31.85 percent of O&M costs, as shown in following table.

ELEMENTS OF ANNUAL MAINTENANCE COST OF CANAL IRRIGATION SYSTEM, AND POSSIBLE SAVINGS
(Rupees per mile)

Elements	Cost	Possible Savings	
Earth work	8,048	50%	4,024
Main structures	672	-	-
Checking of Erosion	3,860	-	-
Watching + Establishment	463	25%	96
T & P	45	-	-
Running charges	264	-	-
Plantations	200	-	-
Other	81	-	-
Total maintenance Cost	13,000		4,140
Percentage	100%		31.85%

Source: Office of the Deputy Secretary, Irrigation, PID Punjab, Lahore.

Savings of 31.85 percent are assumed to apply to the maintenance yardstick for canals, distributories, minors and drains wherever canal roads are built to replace inspection paths. Certain link roads in the proposed road network are not alongside such channels, so the savings do not apply to these roads. Savings are phased in proportionately with road constructon, and begin the year following completion of the relevant construction. The savings for the systems are shown in Table 9.14.

9.6.4. Savings in Vehicle Operating Costs

The demand for and use of transport is increasing, due

495

to population growth on one hand and an increase in production - both agricultural and industrial - on the other. The number of vehicles on the road and the length of the road network have both increased rapidly in the last decade, as evidenced by Tables 9.15 and 9.16, giving data for Punjab. It is evident from these two tables that the total number of motor vehicles has quadrupled during this period, while the roads network has increased by only 66 percent. The traffic load on the roads has more than doubled: total number of vehicles per kilometer of road has increased from 9.5 to 24.3. This heavy traffic load may cause many accidents, resulting in the loss in valuable time and money. To overcome this constraint in development, more roads are needed - such as are proposed in the current study.

Under the proposed CRP, metalled roads will add to the roads network replacing katcha roads, which are generally in bad condition throughout the year and in deplorable condition during the monsoon. Improvements in road condition - shifting them from katcha or shingle roads to metalled roads - will save vehicle operating costs (VOC) by reducing fuel consumption, engine oil use, tyre wear and tear, and maintenance costs. These savings have been estimated by using the parameters adopted by the National Highways Board of the Ministry of Communications and published as "Vehicles Operating Costs". They are depicted in Table No.9.17.

The amount and composition of traffic that will use the new roads was estimated by the consultants, based on traffic surveys published in "Summary of Traffic Date for Punjab and NWFP Highways, 1985," supplemented by traffic count done by the Consultants in Mailsi, Nasir and Upper Swat canal systems in March - April 1987. From the published surveys, a selection of roads was made that represented the rural conditions and farm-to-market roads existing in the irrigation systems in question. The consultants' surveys were done on roads believed comparable to those to be constructed by the Canal Road Project. Based on these surveys it is estimated that about 200 motorized vehicles of all kinds, in the proportions shown in Table 9.18, will ply the new roads each day. Half (100) of these vehicles will be commercial.

The increase in the total number of vehicles in Punjab during the last 13 years has been at the compound rate of 12 percent. During the earlier years (1972-1977) the rate was 8 percent, increasing during the later period (1983-85) to 18 percent. Although the increase in vehicles including automobiles is expected to follow the previous trend, the consultants projected slower growth rates, in order to keep the impact of VOC on the analysis in balance. Growth rates used vary with the different categories of vehicles. It is assumed that commercial vehicles, i.e. busses, trucks and tractor-

trailer units will grow at 5 percent per annum while motorcycles will grow in number at 8 percent. Cars, a luxury item which cannot be afforded by everybody, will increase in numbers at a compound rate of three percent. After twenty years, numbers are held constant, with no further increase projected for rest of the analysis period. The resulting numbers of vehicles are shown for each system in Tables 9.19.1-13.

The distance travelled by each type of vehicle during the year is estimated assuming that each segment of proposed road is travelled daily by the same number of vehicles. The mileage covered by motorized vehicles is presented in Tables 9.20.1-13.

The VOCs under "without improvement" have been estimated using running costs on shingled roads; figures for operation on katcha roads, while more appropriate, were not available. VOCs per vehicle will remain constant, but total VOCs increase in proportion to the number of vehicles. For example, total VOC for Jhang system is estimated at Rs.48.4 million at present, and it will increase to Rs.124.7 million during the next 30 years (assumed life of the project), as depicted in Table 9.21.1. Total VOCs for the other systems are presented in Tables 9.21.2-13.

The improvement in road conditions and metalling of the roads done as part of the project will induce reduction

of wear and tear and deterioration of all types, resulting in a decrease of operating expenditures per vehicle mile. The increase in number of vehicles and distance covered will cause total VOC in Jhang System to increase from Rs.48.4 million to Rs. 91.65 million in the same period; this and comparable data for the other systems are depicted in Tables 9.22.1-13.

The net savings in VOC with the road construction has been determined by deducting the VOC "with improvement" from the VOC "without improvement" There will be no savings during the first year, and then the potential savings - the difference between "with" and "without" - will be realized in proportion to the completion of the construction work. For Jhang system, savings of Rs. 17.06 million in year 6 (after construction is completed) will increase to Rs.33.1 million in years 20-30. Savings in VOC for all systems are presented in Tables 9.23.1-13.

9.6.5 Time Savings

When the new canal roads are placed in service, the local transport problems will be reduced. One of the ways in which transport will be improved is that the new roads will reduce the average distance from villages to paved roads, in the same way and to the same extent that off-road hauling distance will be reduced (see section 9.6.2). The length of the trip from village to destination will not be altered, but the first portion

(and the last portion of the return trip), between the village and the bus stop on the paved road, will be reduced. For this portion of the trip, the usual mode of transport is walking or animal-drawn transport, in either case slower than the bus transport that will replace it. Some time will be saved, leading to a benefit attributable to the new roads.

Successive steps in the calculation of this benefit are recorded in Table 9.24. It is assumed that in the impacted area half of the adult males (aged between 15 to 60) will take three bus trips per month for purposes of arranging farm inputs, selling farm produce, purchasing family needs, etc. Travels of other persons and other travel of these persons are disregarded. One third of these trips will be made by people for whom, or at times when, productive employment is not possible, so that the opportunity cost of the villager's time is zero. For the balance of the trips, the time saved has some economic value.

Time saved is calculated as the difference between walking time at 6 km per hour and bus travel time at 30 km per hour. To travel one km at these speeds takes 10 minutes afoot but only two minutes by bus, thus saving 8 minutes for each kilometer by which walking distance (distance to the paved road) is reduced. The savings applies to both ends of the round trip. In Jhang system, the average distance to the paved road will be reduced

500

by 0.84 km, so the distance saved per round trip is twice that or 1.68 km. The time saved at 8 minutes per km is 13.44 minutes or 0.224 hours per trip. This savings for two trips a month for 124000 travellers in the impacted area of Jhang system comes to 666,624 hours per year, more easily expressed as 83,328 eight-hour days.

The adult male villagers are assumed to have an opportunity wage rate of Rs. 25 per 8 hour day. Self-employed farmers typically have labour earnings comparable to the going local wage rate, so the rate of Rs. 25 per day applies to them as well. The wage is adjusted to an economic wage of Rs.20 per day by application of the shadow wage rate of 80 percent. The time saved (83328 days) at the economic wage rate gives a project benefit for Jhang system of Rs. 1.67 million, using the base year population.

The number of travellers will increase over time at the population growth rate, and the benefits will be realized only as road construction is completed. The latter adjustments of compound growth and phasing in have been made in the benefits shown in Table 9.25.1-13.

9.7 Indirect and Non-quantifiable Benefits

Indirect or secondary benefits of the CRP have been listed and described in Volume I, Chapter 9.7. Since

these benefits, although real and important, cannot be quantified, no further comment or explanation appears to be needed.

9.8 Costs

Close examination of costs as presented in tables in Chapter 6, 7 and 8 and costs shown in Chapter 9 reveal certain differences. These differences are of three main types.

First, the economic analysis in Chapter 9 uses economic prices, which are based on but differ from financial or market prices.

Second, cost estimates by engineers include "escalation" or adjustment for inflation. Escalation from base year costs at the annual rate of 6.5 percent makes a significant difference by the fifth year. On the other hand, the economics section uses constant prices, specifically excluding escalation for inflation. This is done to avoid unnecessary complexity; inflation of costs and benefits would negate each other leaving insignificant impact on results.

The third type of difference is the result of conflicting demands of precision and timeliness. Cost estimates underwent revision several times, including at least one round of changes after economic analysis was begin and the costs fixed. Thus, economic analysis is

based on initial estimates rather than detailed final costs. The magnitude of the difference is not grea', and can readily be accommodated by the sensitivity analyses, which show that small changes in costs have unimportant effects on the feasibility of the project.

9.9 Results of Economic Analysis

9.10 Sensitivity Anlysis of Aggregated CRP

9.11 Sensitivity Analysis of Individual Systems

9.12 Financial Analysis and Capital Recovery

All of these sections in Volume I contain rather complete discussions and reporting of calculations and findings, which are not repeated in this Appendix. Summaries of evaluative measures and other appropriate end products are presented in the relevant sections of Volume I, while the multitude of tables showing calculation for economic analysis and sensitivity analysis have been relegated to this appendix.

9.13 Summary and Conclusions

Findings are summarized and conclusions are given in Chapter 9.13 of Volume I, and are not repeated here.

Table 9.1

Financial and Economic Prices of Agricultural Commodities

(Rupees per metric tonne)

Commodity	Financial			Economical		
	Punjab	Sind	NWFP	Punjab	Sind	NWFP
Wheat	2000	2000	2000	1678	1748	1633
Rice (Paddy)						
IRRI	1325	1325	1325	-	1321	1245
Basmati	2400	2400	2400	2916	-	-
Cotton				5172	5242	-
Sugar Cane	241.25	245.25	234.50	189	179	189
Maize	2125	2125	2125	-	-	1409

Source : Financial prices, Economic Survey of Pakistan 1985-86

Economic prices, Consultants' estimates

BEST AVAILABLE DOCUMENT

504

TABLE 9.2

AREA AND POPULATION OF IRRIGATION SYSTEMS

REPRESENTATIVE DISTRICTS	AREA OF DISTRICT 000 ha.	RURAL POPULATION 000 PERSON	Rural Pop. Density PER Sq.Km.	Population Growth Rate %	IRRIGATION SYSTEMS	GROSS AREA OF SYSTEM 000 ha.	Impacted Area: Area 000 ha.	Population: In Base Year 000	Population: Future Growth Rate, %	Population: In Yr.20 000
PUNJAB										
JHANG	890	1801	202	2.67	JHANG BRANCH	573	481	973	3.0	1756.90
FAISALABAD	584	2505	429	1.33	GOGERA BRANCH	681	425	1824	2.5	2989.13
OKARA	439	1468	334	3.16	DEPALPUR CANAL	472	402	1344	3.1	2475.29
VEHARI	437	1366	313	2.91	MAILSI CANAL	472	361	1127	3.0	2035.41
SIND										
BADIN	649	859	132	4.59	NASIR BRANCH	174	138	182	3.4	355.93
THARPARKAR	2739	1566	57	4.70	JAMRAO & MITHRAO	1083	435	249	3.5	495.01
NAWABSHAH	750	1533	204	2.26	GOTKI FEEDER	514	292	596	3.0	1076.62
SUKKUR	1140	852	75	1.74	ROHRI CANAL	591	235	176	2.7	299.78
DADU	1523	1094	72	3.43	DADU CANAL	209	184	132	3.2	247.66
NWFP										
PESHAWAR	400	1734	434	3.31	KABUL RIVER CANAL	203	96	417	3.2	782.09
D.I.KHAN	901	635	70	3.53	PHARPUR CANAL	98	124	87	3.3	162.68
BANNU	439	758	173	2.70	MARWAT CANAL	1083	435	751	2.8	1305.20
MARDAN	314	1496	476	2.68	UPPER SWAT CANAL	418	421	2005	2.6	3483.51

SOURCE : Area of System and Impacted Area : Planimeter measurement of maps
Other data : PUNJAB (1984-85 Data) Punjab Development Statistics, 1985
SIND (1982-83 Data) Development Statistics, Sind, 1984
NWFP (1985-86 Data) Important District-wise Socio Economic Indicators of NWFP, 1987
Calculations and estimates

BEST AVAILABLE DOCUMENT

505

TABLE 9.3

AREA, PRODUCTION AND YIELD OF MAJOR CROPS IN SELECTED DISTRICTS

(In Base Year)

DISTRICTS	A R E A, 000 ha.				PRODUCTION, 000 tonnes				YIELD, Kg/ha.			
	WHEAT	RICE	COTTON	SUGAR CANE	WHEAT	Cleaned Rice	COTTON LINT 000 BALES	SUGAR CANE	WHEAT	RICE PADDY	SEED COTTON	SUGAR CANE t/ha
PUNJAB												
JHANG	280	32	79	44	512	36	167	1482	1829	1688	1079	33.7
FAISALABAD	248	27	21	87	493	36	35	3219	1988	2000	851	37.0
OKARA	187	68	34	30	445	114	62	1119	2380	2515	931	37.3
VEHARI	188	13	168	23	376	13	654	839	2000	1500	1987	36.5
SIND												
NASIR BRANCH	35	94	15	44	45	193	31	1958	1286	3080	1055	44.5
THARPARKAR	148	5	115	11	337	7	271	445	2277	2100	1203	40.5
NAWABSHAH	187	6	126	31	468	5	325	1286	2503	1250	1317	41.5
SUKKUR	105	6	77	9	204	11	180	337	1943	2750	1193	37.4
DADU	71	54	7	5	100	144	13	188	1408	4000	948	37.6
NWFP												
			MAIZE				MAIZE				MAIZE	
PESHAWAR	80		40	48	150		71	1974	1875		1775	41.1
D.I.KHAN	76		2	3	96		2	72	1262		1333	26.7
BANNU	101		17	2	97		29	56	960		1732	25.2
MARDAN	97	72.4	69	27	104	77	130	1093	1073	1595	1882	40.5

SOURCE : PUNJAB(1984-85 Data) Punjab Development Statistics, 1985
SIND (1982-83 Data) Development Statistics, Sind, 1984
NWFP (1985-86 Data) Important District-wise Socio Economic Indicators of NWFP, 1987

BEST AVAILABLE DOCUMENT

506

TABLE 9.4

AREA OF MAJOR CROPS IN IMPACTED AREA IN PROJECT YEARS 0 AND 20

REPRESENTATIVE DISTRICTS	DISTRICT: GROSS AREA 000 ha.	DISTRICT: AREA OF MAJOR CROPS 000 ha.	DISTRICT: MAJOR CROPS SHARE OF GROSS AREA %	IRRIGATION SYSTEMS	IMPACTED AREA 000 ha.	MAJOR CROPS IN IMPACTED AREA 000 ha.: TOTAL	YEAR	WHEAT	RICE	COTTON	SUGAR CANE
PUNJAB											
JHANG	890	435	48.88	JHANG BRANCH	481	235	Year 0	151.2	17.3	42.7	23.8
							Year 20	156.0	11.0	44.0	24.0
FAISALABAD	584	383	65.58	GOGERA BRANCH	425	279	Year 0	180.6	17.7	15.3	63.4
							Year 20	200.0	13.0	10.0	56.0
OKARA	439	319	72.67	DEPALPUR CANAL	402	292	Year 0	171.2	62.3	31.1	27.5
							Year 20	188.0	64.0	13.0	27.0
VEHARI	437	392	89.70	MAILSI CANAL	361	323	Year 0	155.1	10.7	138.6	19.0
							Year 20	157.0	4.0	152.0	10.0
SIND											
BADIN	649	188	28.97	NASIR BRANCH	138	40	Year 0	13.0	7.0	8.0	12.0
							Year 20	13.0	5.0	5.0	17.0
THARPARKAR	2739	279	10.19	JAMRAO & HITHRAO	435	44	Year 0	23.5	0.8	18.3	1.7
							Year 20	25.0	1.0	16.0	2.0
NAWABSHAH	750	350	46.67	GOTKI FEEDER	292	136	Year 0	72.7	2.3	49.0	12.1
							Year 20	74.0	1.0	49.0	12.0
SUKKUR	1140	197	17.28	ROHRI CANAL	235	41	Year 0	21.7	1.2	15.9	1.9
							Year 20	23.1	1.0	15.0	1.9
DADU	1523	137	9.00	DADU CANAL	184	17	Year 0	8.6	6.5	0.8	0.6
							Year 20	7.0	8.0	1.0	1.0
NWFP											
										MAIZE	
PESHAWAR	400	168	42.00	KABUL RIVER CANAL	96	40	Year 0	19.2		9.6	11.5
							Year 20	19.0		10.0	11.0
D.I.KHAN	901	81	8.98	PHARPUR CANAL	124	11	Year 0	10.5		0.2	0.4
							Year 20	9.0		1.0	1.0
BANNU	439	120	27.43	MARWAT CANAL	435	119	Year 0	100.5		16.7	2.2
							Year 20	99.0		15.0	5.0
MARDAN	314	266	84.55	UPPER SWAT CANAL	421	336	Year 0	130.4	97.0	92.2	36.2
							Year 20	112.8	96.7	103.4	42.9

SOURCE : PUNJAB (1984-85 Data) Punjab Development Statistics, 1985
SIND (1982-83 Data) Development Statistics, Sind, 1984
NWFP (1985-86 Data) Important District-wise Socio Ecomic Indicators of NWFP, 1987

BEST AVAILABLE DOCUMENT

TABLE 9.5

YIELDS OF MAJOR CROPS IN DISTRICTS AND SYSTEMS, AND PROJECTED YIELD IN YEAR 20 UNDER NORMAL GROWTH

(Kg per ha.)

DISTRICTS	CURRENT YIELD				IRRIGATION SYSTEMS	CURRENT YIELD				YIELD IN YEAR 20			
	WHEAT	RICE PADDY	SEED COTTON	SUGAR CANE tonnes		WHEAT	RICE PADDY	SEED COTTON	SUGAR CANE tonnes	WHEAT	RICE PADDY	SEED COTTON	SUGAR CANE tonnes
PUNJAB													
JHANG	1829	1688	1079	33.7	JHANG BRANCH	1829	1688	1079	33.7	2400	2500	1275	36.0
FAISALABAD	1988	2000	851	37.0	GOGERA BRANCH	1988	2000	851	37.0	2500	2900	1000	39.0
OKARA	2380	2515	931	37.3	DEPALPUR CANAL	2380	2515	931	37.3	2500	3300	1000	39.0
VEHARI	2000	1500	1987	36.5	MAILSI CANAL	2650	1500	2350	44.5	3310	2250	2650	46.0
SIND													
BADIN	1286	3080	1055	44.5	NASIR BRANCH	1780	3080	1055	44.5	2075	3675	1600	46.0
THARPARKAR	2277	2100	1203	40.5	JAMRAO & MITHRAO	2277	2100	1203	40.5	2500	3000	1500	43.0
NAWABSHAH	2503	1250	1317	41.5	GOTKI FEEDER	2503	1250	1317	41.5	2850	2250	1600	43.0
SUKKUR	1943	2750	1193	37.4	RDHRI CANAL	1943	2750	1193	37.4	2500	3600	1500	40.0
DADU	1408	4000	948	37.6	DADU CANAL	1408	4000	923	37.6	1600	4800	1150	41.0
NWFP													
			MAIZE					MAIZE				MAIZE	
PESHAWAR	1875		1775	41.1	KABUL RIVER CANAL	1875		1756	41.1	2300		2000	42.0
D.I.KHAN	1262		1333	26.7	PHARPUR CANAL	1262		1333	26.7	1550		1800	35.0
BANNU	960		1732	25.2	MARWAT CANAL	960		1732	25.2	1500		1800	30.0
MARDAN	1073	1595	1882	40.5	UPPER SWAT CANAL	1073	1595	1750	30.5	2500	1900	2500	42.0

SOURCE : District Data, Table 9.3
System Data, Consultants Estimates

BEST AVAILABLE DOCUMENT

508

TABLE 9.6

AREA, YIELD AND PRODUCTION OF MAJOR CROPS IN IMPACTED AREA, BY SYSTEM

(Base year)

SYSTEMS	A R E A, 000 ha.					YIELD, Kg/ha.				PRODUCTION, 000 tonnes			
	TOTAL OF MAJOR CROPS	WHEAT	RICE	COTTON	SUGAR CANE	WHEAT	RICE	SEED COTTON	SUGAR CANE t/ha	WHEAT	RICE	SEED COTTON	SUGAR CANE
PUNJAB													
JHANG BRANCH	235	151.2	17.3	42.7	23.8	1829	1688	1079	33.7	276.5	29.2	46.0	800.5
GOGERA BRANCH	279	180.6	19.7	15.3	63.4	1988	2000	851	37.0	359.0	39.3	13.0	2344.1
DEPALPUR CANAL	292	171.2	62.3	31.1	27.5	2380	2515	931	37.3	407.5	156.6	29.0	1024.6
MAILSI CANAL	323	155.1	10.7	138.6	19.0	2650	1500	2350	44.5	411.0	16.1	325.7	844.4
SIND													
NASIR BRANCH	40	13.0	7.0	8.0	12.0	1780	3080	1055	44.5	23.1	21.6	8.4	534.0
JAMRAO & MITHRAO	44	23.5	0.8	18.3	1.7	2277	2100	1203	40.5	53.5	1.7	22.0	70.7
GOTKI FEEDER	136	72.7	2.3	49.0	12.1	2503	1250	1317	41.5	182.0	2.9	64.5	500.1
ROHRI CANAL	41	21.7	1.2	15.9	1.9	1943	2750	1193	37.4	42.1	3.4	19.0	69.6
DADU CANAL	17	8.6	6.5	0.8	0.6	1408	4000	923	37.6	12.1	26.0	0.8	22.7
NWFP													
				MAIZE				MAIZE				MAIZE	
KABUL RIVER CANAL	40	19.2		9.6	11.5	1875		1775	41.1	36.0		17.1	474.2
PAHARPUR CANAL	11	10.5		0.2	0.4	1262		1333	26.7	13.2		0.3	9.9
MARWAT CANAL	119	100.5		16.7	2.2	960		1732	25.2	96.4		28.8	55.0
UPPER SWAT CANAL	356	130.4	97.0	92.2	36.2	1073	1595	1750	30.5	139.9	154.8	161.4	1103.8

Source : Area Data, Table 9.4
Yield Data, Table 9.5

BEST AVAILABLE DOCUMENT

TABLE 9.7.1

NORMAL GROWTH IN AGRICULTURE :

PROJECTION OF AREA, YIELD AND PRODUCTION OF MAJOR CROPS, JHANG SYSTEM

YEARS	A R E A, 000 ha.				YIELD, Kg/ha.				PRODUCTION, 000 tonnes				
	WHEAT	RICE	SEED COTTON	SUGAR CANE	WHEAT	RICE PADDY	SEED COTTON	SUGAR CANE t/ha	WHEAT	RICE PADDY	SEED COTTON	SUGAR CANE	TOTAL
Base year 0	151.2	17.3	42.7	23.8	1829	1688	1079	33.7	276.54	29.20	46.07	802.06	1153.9
1	151.4	17.0	42.8	23.8	1858	1729	1089	33.8	281.31	29.36	46.56	805.14	1162.4
2	151.7	16.7	42.8	23.8	1886	1769	1099	33.9	286.08	29.49	47.05	808.21	1170.8
3	151.9	16.4	42.9	23.8	1915	1810	1108	34.0	290.87	29.60	47.54	811.29	1179.3
4	152.2	16.0	43.0	23.8	1943	1850	1118	34.2	295.68	29.68	48.04	814.37	1187.8
5	152.4	15.7	43.0	23.9	1972	1891	1128	34.3	300.49	29.74	48.53	817.46	1196.2
6	152.6	15.4	43.1	23.9	2000	1932	1138	34.4	305.33	29.77	49.03	820.55	1204.7
7	152.9	15.1	43.2	23.9	2029	1972	1148	34.5	310.17	29.77	49.52	823.63	1213.1
8	153.1	14.8	43.2	23.9	2057	2013	1157	34.6	315.03	29.75	50.02	826.73	1221.5
9	153.4	14.5	43.3	23.9	2086	2053	1167	34.7	319.90	29.70	50.52	829.82	1229.9
10	153.6	14.2	43.4	23.9	2115	2094	1177	34.9	324.79	29.63	51.02	832.92	1238.4
11	153.8	13.8	43.4	23.9	2143	2135	1187	35.0	329.69	29.53	51.52	836.01	1246.8
12	154.1	13.5	43.5	23.9	2172	2175	1197	35.1	334.60	29.41	52.03	839.11	1255.2
13	154.3	13.2	43.5	23.9	2200	2216	1206	35.2	339.53	29.26	52.53	842.22	1263.5
14	154.6	12.9	43.6	23.9	2229	2256	1216	35.3	344.47	29.08	53.04	845.32	1271.9
15	154.8	12.6	43.7	24.0	2257	2297	1226	35.4	349.42	28.88	53.55	848.43	1280.3
16	155.0	12.3	43.7	24.0	2286	2338	1236	35.5	354.39	28.66	54.05	851.54	1288.6
17	155.3	11.9	43.8	24.0	2314	2378	1246	35.7	359.37	28.41	54.56	854.65	1297.0
18	155.5	11.6	43.9	24.0	2343	2419	1255	35.8	364.37	28.13	55.07	857.76	1305.3
19	155.8	11.3	43.9	24.0	2371	2459	1265	35.9	369.38	27.83	55.59	860.88	1313.7
20	156.0	11.0	44.0	24.0	2400	2500	1275	36.0	374.40	27.50	56.10	864.00	1322.0
21	156.0	11.0	44.0	24.0	2400	2500	1275	36.0	374.40	27.50	56.10	864.00	1322.0
22	156.0	11.0	44.0	24.0	2400	2500	1275	36.0	374.40	27.50	56.10	864.00	1322.0
23	156.0	11.0	44.0	24.0	2400	2500	1275	36.0	374.40	27.50	56.10	864.00	1322.0
24	156.0	11.0	44.0	24.0	2400	2500	1275	36.0	374.40	27.50	56.10	864.00	1322.0
25	156.0	11.0	44.0	24.0	2400	2500	1275	36.0	374.40	27.50	56.10	864.00	1322.0
26	156.0	11.0	44.0	24.0	2400	2500	1275	36.0	374.40	27.50	56.10	864.00	1322.0
27	156.0	11.0	44.0	24.0	2400	2500	1275	36.0	374.40	27.50	56.10	864.00	1322.0
28	156.0	11.0	44.0	24.0	2400	2500	1275	36.0	374.40	27.50	56.10	864.00	1322.0
29	156.0	11.0	44.0	24.0	2400	2500	1275	36.0	374.40	27.50	56.10	864.00	1322.0
30	156.0	11.0	44.0	24.0	2400	2500	1275	36.0	374.40	27.50	56.10	864.00	1322.0

)URCE : AREA, TABLE 9.4
YIELD, TABLE 9.5

BEST AVAILABLE DOCUMENT

510

TABLE 9.7.2

NORMAL GROWTH IN AGRICULTURE :

PROJECTION OF AREA, YIELD AND PRODUCTION OF MAJOR CROPS, GOGERA SYSTEM

YEARS	AREA, 000 ha.				YIELD, Kg/ha.				PRODUCTION, 000 tonnes				
	WHEAT	RICE	SEED COTTON	SUGAR CANE	WHEAT	RICE PADDY	SEED COTTON	SUGAR CANE t/ha	WHEAT	RICE PADDY	SEED COTTON	SUGAR CANE	TOTAL
Base year 0	180.6	19.7	15.3	63.4	1988	2000	851	37.0	359.03	39.40	13.02	2345.80	2757.3
1	181.6	19.4	15.0	63.0	2014	2045	858	37.1	365.61	39.60	12.91	2338.41	2756.5
2	182.5	19.0	14.8	62.7	2039	2090	866	37.2	372.24	39.77	12.79	2330.95	2755.7
3	183.5	18.7	14.5	62.3	2065	2135	873	37.3	378.91	39.91	12.67	2323.42	2754.9
4	184.5	18.4	14.2	61.9	2090	2180	881	37.4	385.64	40.02	12.54	2315.81	2754.0
5	185.5	18.0	14.0	61.6	2116	2225	888	37.5	392.41	40.11	12.41	2308.13	2753.1
6	186.4	17.7	13.7	61.2	2142	2270	896	37.6	399.24	40.16	12.28	2300.37	2752.0
7	187.4	17.4	13.4	60.8	2167	2315	903	37.7	406.11	40.18	12.14	2292.54	2751.0
8	188.4	17.0	13.2	60.4	2193	2360	911	37.8	413.04	40.17	12.00	2284.63	2749.8
9	189.3	16.7	12.9	60.1	2218	2405	918	37.9	420.01	40.13	11.86	2276.65	2748.6
10	190.3	16.4	12.7	59.7	2244	2450	926	38.0	427.03	40.06	11.71	2268.60	2747.4
11	191.3	16.0	12.4	59.3	2270	2495	933	38.1	434.11	39.96	11.55	2260.47	2746.1
12	192.2	15.7	12.1	59.0	2295	2540	940	38.2	441.23	39.83	11.40	2252.27	2744.7
13	193.2	15.3	11.9	58.6	2321	2585	948	38.3	448.40	39.67	11.24	2244.00	2743.3
14	194.2	15.0	11.6	58.2	2346	2630	955	38.4	455.62	39.48	11.07	2235.65	2741.8
15	195.2	14.7	11.3	57.9	2372	2675	963	38.5	462.90	39.26	10.90	2227.23	2740.3
16	196.1	14.3	11.1	57.5	2398	2720	970	38.6	470.22	39.00	10.73	2218.73	2738.7
17	197.1	14.0	10.8	57.1	2423	2765	978	38.7	477.59	38.72	10.55	2210.16	2737.0
18	198.1	13.7	10.5	56.7	2449	2810	985	38.8	485.01	38.41	10.37	2201.51	2735.3
19	199.0	13.3	10.3	56.4	2474	2855	993	38.9	492.48	38.07	10.19	2192.79	2733.5
20	200.0	13.0	10.0	56.0	2500	2900	1000	39.0	500.00	37.70	10.00	2184.00	2731.7
21	200.0	13.0	10.0	56.0	2500	2900	1000	39.0	500.00	37.70	10.00	2184.00	2731.7
22	200.0	13.0	10.0	56.0	2500	2900	1000	39.0	500.00	37.70	10.00	2184.00	2731.7
23	200.0	13.0	10.0	56.0	2500	2900	1000	39.0	500.00	37.70	10.00	2184.00	2731.7
24	200.0	13.0	10.0	56.0	2500	2900	1000	39.0	500.00	37.70	10.00	2184.00	2731.7
25	200.0	13.0	10.0	56.0	2500	2900	1000	39.0	500.00	37.70	10.00	2184.00	2731.7
26	200.0	13.0	10.0	56.0	2500	2900	1000	39.0	500.00	37.70	10.00	2184.00	2731.7
27	200.0	13.0	10.0	56.0	2500	2900	1000	39.0	500.00	37.70	10.00	2184.00	2731.7
28	200.0	13.0	10.0	56.0	2500	2900	1000	39.0	500.00	37.70	10.00	2184.00	2731.7
29	200.0	13.0	10.0	56.0	2500	2900	1000	39.0	500.00	37.70	10.00	2184.00	2731.7
30	200.0	13.0	10.0	56.0	2500	2900	1000	39.0	500.00	37.70	10.00	2184.00	2731.7

OURCE : AREA, TABLE 9.4
YIELD, TABLE 9.5

511

TABLE 9.7.3

NORMAL GROWTH IN AGRICULTURE :

PROJECTION OF AREA, YIELD AND PRODUCTION OF MAJOR CROPS, DEPALPUR SYSTEM

YEARS	AREA, 000 ha.				YIELD, Kg/ha.				PRODUCTION, 000 tonnes				
	WHEAT	RICE	SEED COTTON	SUGAR CANE	WHEAT	RICE PADDY	SEED COTTON	SUGAR CANE t/ha	WHEAT	RICE PADDY	SEED COTTON	SUGAR CANE	TOTAL
Base year 0	171.2	62.3	31.1	27.5	2380	2515	931	37.3	407.46	156.68	28.95	1025.75	1618.8
1	172.0	62.4	30.2	27.5	2386	2554	934	37.4	410.49	159.35	28.22	1027.15	1625.2
2	172.9	62.5	29.3	27.5	2392	2594	938	37.5	413.53	162.02	27.47	1028.55	1631.6
3	173.7	62.6	28.4	27.4	2398	2633	941	37.6	416.58	164.69	26.72	1029.95	1637.9
4	174.6	62.6	27.5	27.4	2404	2672	945	37.6	419.64	167.37	25.96	1031.34	1644.3
5	175.4	[illegible]	26.6	27.4	2410	2711	948	37.7	422.71	170.06	25.20	1032.72	1650.7
6	176.2	62.8	25.7	27.4	2416	2751	952	37.8	425.80	172.76	24.43	1034.10	1657.1
7	177.1	62.9	24.8	27.3	2422	2790	955	37.9	428.89	175.46	23.65	1035.48	1663.5
8	177.9	63.0	23.9	27.3	2428	2829	959	38.0	431.99	178.17	22.87	1036.85	1669.9
9	178.8	63.1	23.0	27.3	2434	2868	962	38.1	435.10	180.89	22.08	1038.22	1676.3
10	179.6	63.2	22.1	27.3	2440	2908	966	38.2	438.22	183.61	21.29	1039.59	1682.7
11	180.4	63.2	21.1	27.2	2446	2947	969	38.2	441.36	186.34	20.49	1040.95	1689.1
12	181.3	63.3	20.2	27.2	2452	2986	972	38.3	444.50	189.07	19.68	1042.30	1695.6
13	182.1	63.4	19.3	27.2	2458	3025	976	38.4	447.65	191.82	18.87	1043.66	1702.0
14	183.0	63.5	18.4	27.2	2464	3065	979	38.5	450.81	194.57	18.05	1045.00	1708.4
15	183.8	63.6	17.5	27.1	2470	3104	983	38.6	453.99	197.32	17.22	1046.35	1714.9
16	184.6	63.7	16.6	27.1	2476	3143	986	38.7	457.17	200.08	16.39	1047.69	1721.3
17	185.5	63.7	15.7	27.1	2482	3182	990	38.7	460.36	202.85	15.55	1049.02	1727.8
18	186.3	63.8	14.8	27.1	2488	3222	993	38.8	463.56	205.63	14.71	1050.35	1734.3
19	187.2	63.9	13.9	27.0	2494	3261	997	38.9	466.78	208.41	13.86	1051.68	1740.7
20	188.0	64.0	13.0	27.0	2500	3300	1000	39.0	470.00	211.20	13.00	1053.00	1747.2
21	188.0	64.0	13.0	27.0	2500	3300	1000	39.0	470.00	211.20	13.00	1053.00	1747.2
22	188.0	64.0	13.0	27.0	2500	3300	1000	39.0	470.00	211.20	13.00	1053.00	1747.2
23	188.0	64.0	13.0	27.0	2500	3300	1000	39.0	470.00	211.20	13.00	1053.00	1747.2
24	188.0	64.0	13.0	27.0	2500	3300	1000	39.0	470.00	211.20	13.00	1053.00	1747.2
25	188.0	64.0	13.0	27.0	2500	3300	1000	39.0	470.00	211.20	13.00	1053.00	1747.2
26	188.0	64.0	13.0	27.0	2500	3300	1000	39.0	470.00	211.20	13.00	1053.00	1747.2
27	188.0	64.0	13.0	27.0	2500	3300	1000	39.0	470.00	211.20	13.00	1053.00	1747.2
28	188.0	64.0	13.0	27.0	2500	3300	1000	39.0	470.00	211.20	13.00	1053.00	1747.2
29	188.0	64.0	13.0	27.0	2500	3300	1000	39.0	470.00	211.20	13.00	1053.00	1747.2
30	188.0	64.0	13.0	27.0	2500	3300	1000	39.0	470.00	211.20	13.00	1053.00	1747.2

URCE : AREA, TABLE 9.4
YIELD, TABLE 9.5

BEST AVAILABLE DOCUMENT

512

TABLE 9.7.4

NORMAL GROWTH IN AGRICULTURE :

PROJECTION OF AREA, YIELD AND PRODUCTION OF MAJOR CROPS, MAILSI SYSTEM

YEARS	AREA, 000 ha.				YIELD, Kg/ha.				PRODUCTION, 000 tonnes				
	WHEAT	RICE	SEED COTTON	SUGAR CANE	WHEAT	RICE PADDY	SEED COTTON	SUGAR CANE t/ha	WHEAT	RICE PADDY	SEED COTTON	SUGAR CANE	TOTAL
Base year 0	155.1	10.7	138.6	19.0	2650	1500	2350	44.5	411.02	16.05	325.71	845.50	1598.3
1	155.2	10.4	139.3	18.6	2683	1538	2365	44.6	416.39	15.94	329.37	826.87	1588.6
2	155.3	10.0	139.9	18.1	2716	1575	2380	44.7	421.77	15.80	333.06	808.17	1578.8
3	155.4	9.7	140.6	17.7	2749	1613	2395	44.7	427.15	15.63	336.76	789.40	1568.9
4	155.5	9.4	141.3	17.2	2782	1650	2410	44.8	432.55	15.44	340.48	770.56	1559.0
5	155.6	9.0	142.0	16.8	2815	1688	2425	44.9	437.94	15.23	344.23	751.66	1549.1
6	155.7	8.7	142.6	16.3	2848	1725	2440	45.0	443.35	14.99	347.99	732.69	1539.0
7	155.8	8.4	143.3	15.9	2881	1763	2455	45.0	448.76	14.73	351.78	713.65	1528.9
8	155.9	8.0	144.0	15.4	2914	1800	2470	45.1	454.18	14.44	355.58	694.54	1518.7
9	156.0	7.7	144.6	15.0	2947	1838	2485	45.2	459.60	14.12	359.41	675.37	1508.5
10	156.1	7.4	145.3	14.5	2980	1875	2500	45.3	465.03	13.78	363.25	656.13	1498.2
11	156.1	7.0	146.0	14.1	3013	1913	2515	45.3	470.46	13.42	367.11	636.82	1487.8
12	156.2	6.7	146.6	13.6	3046	1950	2530	45.4	475.91	13.03	371.00	617.44	1477.4
13	156.3	6.3	147.3	13.2	3079	1988	2545	45.5	481.36	12.61	374.90	598.00	1466.9
14	156.4	6.0	148.0	12.7	3112	2025	2560	45.6	486.81	12.17	378.83	578.48	1456.3
15	156.5	5.7	148.7	12.3	3145	2063	2575	45.6	492.27	11.70	382.77	558.91	1445.7
16	156.6	5.3	149.3	11.8	3178	2100	2590	45.7	497.74	11.21	386.74	539.26	1435.0
17	156.7	5.0	150.0	11.4	3211	2138	2605	45.8	503.21	10.70	390.72	519.55	1424.2
18	156.8	4.7	150.7	10.9	3244	2175	2620	45.9	508.69	10.16	394.73	499.77	1413.3
19	156.9	4.3	151.3	10.5	3277	2213	2635	45.9	514.18	9.59	398.75	479.92	1402.4
20	157.0	4.0	152.0	10.0	3310	2250	2650	46.0	519.67	9.00	402.80	460.00	1391.5
21	157.0	4.0	152.0	10.0	3310	2250	2650	46.0	519.67	9.00	402.80	460.00	1391.5
22	157.0	4.0	152.0	10.0	3310	2250	2650	46.0	519.67	9.00	402.80	460.00	1391.5
23	157.0	4.0	152.0	10.0	3310	2250	2650	46.0	519.67	9.00	402.80	460.00	1391.5
24	157.0	4.0	152.0	10.0	3310	2250	2650	46.0	519.67	9.00	402.80	460.00	1391.5
25	157.0	4.0	152.0	10.0	3310	2250	2650	46.0	519.67	9.00	402.80	460.00	1391.5
26	157.0	4.0	152.0	10.0	3310	2250	2650	46.0	519.67	9.00	402.80	460.00	1391.5
27	157.0	4.0	152.0	10.0	3310	2250	2650	46.0	519.67	9.00	402.80	460.00	1391.5
28	157.0	4.0	152.0	10.0	3310	2250	2650	46.0	519.67	9.00	402.80	460.00	1391.5
29	157.0	4.0	152.0	10.0	3310	2250	2650	46.0	519.67	9.00	402.80	460.00	1391.5
30	157.0	4.0	152.0	10.0	3310	2250	2650	46.0	519.67	9.00	402.80	460.00	1391.5

SOURCE : AREA, TABLE 9.4
YIELD, TABLE 9.5

BEST AVAILABLE DOCUMENT

TABLE 9.7.5

NORMAL GROWTH IN AGRICULTURE :

PROJECTION OF AREA, YIELD AND PRODUCTION OF MAJOR CROPS, NASIR BRANCH SYSTEM

YEARS	A R E A, 000 ha.				YIELD, Kg/ha.				PRODUCTION, 000 tonnes				
	WHEAT	RICE	SEED COTTON	SUGAR CANE	WHEAT	RICE PADDY	SEED COTTON	SUGAR CANE t/ha	WHEAT	RICE PADDY	SEED COTTON	SUGAR CANE	TOTAL
Base year 0	13.0	7.0	8.0	12.0	1780	3080	1055	44.5	23.14	21.56	8.44	534.00	587.1
1	13.0	6.9	7.9	12.3	1795	3110	1082	44.6	23.33	21.46	8.50	546.04	599.3
2	13.0	6.8	7.7	12.5	1810	3140	1110	44.7	23.52	21.35	8.54	558.13	611.5
3	13.0	6.7	7.6	12.8	1824	3169	1137	44.7	23.72	21.23	8.58	570.24	623.8
4	13.0	6.6	7.4	13.0	1839	3199	1164	44.8	23.91	21.11	8.61	582.40	636.0
5	13.0	6.5	7.3	13.3	1854	3229	1191	44.9	24.10	20.99	8.64	594.59	648.3
6	13.0	6.4	7.1	13.5	1869	3259	1219	45.0	24.29	20.85	8.65	606.83	660.6
7	13.0	6.3	7.0	13.8	1883	3288	1246	45.0	24.48	20.72	8.66	619.09	672.9
8	13.0	6.2	6.8	14.0	1898	3318	1273	45.1	24.67	20.57	8.66	631.40	685.3
9	13.0	6.1	6.7	14.3	1913	3348	1300	45.2	24.87	20.42	8.65	643.74	697.7
10	13.0	6.0	6.5	14.5	1928	3378	1328	45.3	25.06	20.27	8.63	656.13	710.1
11	13.0	5.9	6.4	14.8	1942	3407	1355	45.3	25.25	20.10	8.60	668.54	722.5
12	13.0	5.8	6.2	15.0	1957	3437	1382	45.4	25.44	19.93	8.57	681.00	734.9
13	13.0	5.7	6.1	15.3	1972	3467	1409	45.5	25.63	19.76	8.53	693.49	747.4
14	13.0	5.6	5.9	15.5	1987	3497	1437	45.6	25.82	19.58	8.48	706.03	759.9
15	13.0	5.5	5.8	15.8	2001	3526	1464	45.6	26.02	19.39	8.42	718.59	772.4
16	13.0	5.4	5.6	16.0	2016	3556	1491	45.7	26.21	19.20	8.35	731.20	785.0
17	13.0	5.3	5.5	16.3	2031	3586	1518	45.8	26.40	19.00	8.27	743.84	797.5
18	13.0	5.2	5.3	16.5	2046	3616	1546	45.9	26.59	18.80	8.19	756.53	810.1
19	13.0	5.1	5.2	16.8	2060	3645	1573	45.9	26.78	18.59	8.10	769.24	822.7
20	13.0	5.0	5.0	17.0	2075	3675	1600	46.0	26.98	18.38	8.00	782.00	835.4
21	13.0	5.0	5.0	17.0	2075	3675	1600	46.0	26.98	18.38	8.00	782.00	835.4
22	13.0	5.0	5.0	17.0	2075	3675	1600	46.0	26.98	18.38	8.00	782.00	835.4
23	13.0	5.0	5.0	17.0	2075	3675	1600	46.0	26.98	18.38	8.00	782.00	835.4
24	13.0	5.0	5.0	17.0	2075	3675	1600	46.0	26.98	18.38	8.00	782.00	835.4
25	13.0	5.0	5.0	17.0	2075	3675	1600	46.0	26.98	18.38	8.00	782.00	835.4
26	13.0	5.0	5.0	17.0	2075	3675	1600	46.0	26.98	18.38	8.00	782.00	835.4
27	13.0	5.0	5.0	17.0	2075	3675	1600	46.0	26.98	18.38	8.00	782.00	835.4
28	13.0	5.0	5.0	17.0	2075	3675	1600	46.0	26.98	18.38	8.00	782.00	835.4
29	13.0	5.0	5.0	17.0	2075	3675	1600	46.0	26.98	18.38	8.00	782.00	835.4
30	13.0	5.0	5.0	17.0	2075	3675	1600	46.0	26.98	18.38	8.00	782.00	835.4

SOURCE : AREA, TABLE 9.4
YIELD, TABLE 9.5

BEST AVAILABLE DOCUMENT

574

TABLE 9.7.6

NORMAL GROWTH IN AGRICULTURE :

PROJECTION OF AREA, YIELD AND PRODUCTION OF MAJOR CROPS, JAMRAO & MITHRAO SYSTEM

YEARS	A R E A, 000 ha.				YIELD, Kg/ha.				PRODUCTION, 000 tonnes				
	WHEAT	RICE	SEED COTTON	SUGAR CANE	WHEAT	RICE PADDY	SEED COTTON	SUGAR CANE t/ha	WHEAT	RICE PADDY	SEED COTTON	SUGAR CANE	TOTAL
Base year 0	23.5	0.8	18.3	1.7	2277	2100	1203	40.5	53.51	1.68	22.01	68.85	146.1
1	23.6	0.8	18.2	1.7	2288	2145	1218	40.6	53.94	1.74	22.15	69.67	147.5
2	23.7	0.8	18.1	1.7	2299	2190	1233	40.8	54.38	1.80	22.27	70.50	148.9
3	23.7	0.8	18.0	1.7	2310	2235	1248	40.9	54.82	1.86	22.40	71.33	150.4
4	23.8	0.8	17.8	1.8	2322	2280	1262	41.0	55.25	1.92	22.52	72.16	151.9
5	23.9	0.9	17.7	1.8	2333	2325	1277	41.1	55.69	1.98	22.64	73.00	153.3
6	24.0	0.9	17.6	1.8	2344	2370	1292	41.3	56.14	2.04	22.75	73.84	154.8
7	24.0	0.9	17.5	1.8	2355	2415	1307	41.4	56.58	2.10	22.87	74.68	156.2
8	24.1	0.9	17.4	1.8	2366	2460	1322	41.5	57.03	2.16	22.97	75.53	157.7
9	24.2	0.9	17.3	1.8	2377	2505	1337	41.6	57.47	2.23	23.08	76.38	159.2
10	24.3	0.9	17.2	1.9	2389	2550	1352	41.8	57.92	2.30	23.18	77.24	160.6
11	24.3	0.9	17.0	1.9	2400	2595	1366	41.9	58.37	2.36	23.28	78.10	162.1
12	24.4	0.9	16.9	1.9	2411	2640	1381	42.0	58.82	2.43	23.37	78.96	163.6
13	24.5	0.9	16.8	1.9	2422	2685	1396	42.1	59.28	2.50	23.46	79.83	165.1
14	24.6	0.9	16.7	1.9	2433	2730	1411	42.3	59.73	2.57	23.55	80.70	166.5
15	24.6	1.0	16.6	1.9	2444	2775	1426	42.4	60.19	2.64	23.63	81.57	168.0
16	24.7	1.0	16.5	1.9	2455	2820	1441	42.5	60.65	2.71	23.71	82.45	169.5
17	24.8	1.0	16.3	2.0	2467	2865	1455	42.6	61.11	2.78	23.79	83.33	171.0
18	24.9	1.0	16.2	2.0	2478	2910	1470	42.8	61.57	2.85	23.86	84.22	172.5
19	24.9	1.0	16.1	2.0	2489	2955	1485	42.9	62.03	2.93	23.93	85.11	174.0
20	25.0	1.0	16.0	2.0	2500	3000	1500	43.0	62.50	3.00	24.00	86.00	175.5
21	25.0	1.0	16.0	2.0	2500	3000	1500	43.0	62.50	3.00	24.00	86.00	175.5
22	25.0	1.0	16.0	2.0	2500	3000	1500	43.0	62.50	3.00	24.00	86.00	175.5
23	25.0	1.0	16.0	2.0	2500	3000	1500	43.0	62.50	3.00	24.00	86.00	175.5
24	25.0	1.0	16.0	2.0	2500	3000	1500	43.0	62.50	3.00	24.00	86.00	175.5
25	25.0	1.0	16.0	2.0	2500	3000	1500	43.0	62.50	3.00	24.00	86.00	175.5
26	25.0	1.0	16.0	2.0	2500	3000	1500	43.0	62.50	3.00	24.00	86.00	175.5
27	25.0	1.0	16.0	2.0	2500	3000	1500	43.0	62.50	3.00	24.00	86.00	175.5
28	25.0	1.0	16.0	2.0	2500	3000	1500	43.0	62.50	3.00	24.00	86.00	175.5
29	25.0	1.0	16.0	2.0	2500	3000	1500	43.0	62.50	3.00	24.00	86.00	175.5
30	25.0	1.0	16.0	2.0	2500	3000	1500	43.0	62.50	3.00	24.00	86.00	175.5

SOURCE : AREA, TABLE 9.4
YIELD, TABLE 9.5

BEST AVAILABLE DOCUMENT

515

TABLE 9.7.7

NORMAL GROWTH IN AGRICULTURE :

PROJECTION OF AREA, YIELD AND PRODUCTION OF MAJOR CROPS, GOTKI FEEDER SYSTEM

YEARS	A R E A, 000 ha.				YIELD, Kg/ha.				PRODUCTION, 000 tonnes				
	WHEAT	RICE	SEED COTTON	SUGAR CANE	WHEAT	RICE PADDY	SEED COTTON	SUGAR CANE t/ha	WHEAT	RICE PADDY	SEED COTTON	SUGAR CANE	TOTAL
Base year 0	72.7	2.3	49.0	12.1	2503	1250	1317	41.5	181.97	2.88	64.53	502.15	751.5
1	72.8	2.2	49.0	12.1	2520	1300	1331	41.6	183.39	2.91	65.23	502.85	754.4
2	72.8	2.2	49.0	12.1	2538	1350	1345	41.7	184.82	2.93	65.92	503.55	757.2
3	72.9	2.1	49.0	12.1	2555	1400	1359	41.7	186.25	2.95	66.61	504.25	760.1
4	73.0	2.0	49.0	12.1	2572	1450	1374	41.8	187.68	2.96	67.31	504.94	762.9
5	73.0	2.0	49.0	12.1	2590	1500	1388	41.9	189.12	2.96	68.00	505.64	765.7
6	73.1	1.9	49.0	12.1	2607	1550	1402	42.0	190.55	2.96	68.69	506.34	768.5
7	73.2	1.8	49.0	12.1	2624	1600	1416	42.0	191.99	2.95	69.39	507.03	771.4
8	73.2	1.8	49.0	12.1	2642	1650	1430	42.1	193.43	2.94	70.08	507.73	774.2
9	73.3	1.7	49.0	12.1	2659	1700	1444	42.2	194.88	2.92	70.77	508.42	777.0
10	73.4	1.7	49.0	12.1	2677	1750	1459	42.3	196.32	2.89	71.47	509.11	779.8
11	73.4	1.6	49.0	12.0	2694	1800	1473	42.3	197.77	2.85	72.16	509.80	782.6
12	73.5	1.5	49.0	12.0	2711	1850	1487	42.4	199.22	2.81	72.85	510.50	785.4
13	73.5	1.5	49.0	12.0	2729	1900	1501	42.5	200.67	2.76	73.55	511.19	788.2
14	73.6	1.4	49.0	12.0	2746	1950	1515	42.6	202.13	2.71	74.24	511.88	791.0
15	73.7	1.3	49.0	12.0	2763	2000	1529	42.6	203.58	2.65	74.93	512.57	793.7
16	73.7	1.3	49.0	12.0	2781	2050	1543	42.7	205.04	2.58	75.63	513.25	796.5
17	73.8	1.2	49.0	12.0	2798	2100	1558	42.8	206.50	2.51	76.32	513.94	799.3
18	73.9	1.1	49.0	12.0	2815	2150	1572	42.9	207.97	2.43	77.01	514.63	802.0
19	73.9	1.1	49.0	12.0	2833	2200	1586	42.9	209.43	2.34	77.71	515.31	804.8
20	74.0	1.0	49.0	12.0	2850	2250	1600	43.0	210.90	2.25	78.40	516.00	807.6
21	74.0	1.0	49.0	12.0	2850	2250	1600	43.0	210.90	2.25	78.40	516.00	807.6
22	74.0	1.0	49.0	12.0	2850	2250	1600	43.0	210.90	2.25	78.40	516.00	807.6
23	74.0	1.0	49.0	12.0	2850	2250	1600	43.0	210.90	2.25	78.40	516.00	807.6
24	74.0	1.0	49.0	12.0	2850	2250	1600	43.0	210.90	2.25	78.40	516.00	807.6
25	74.0	1.0	49.0	12.0	2850	2250	1600	43.0	210.90	2.25	78.40	516.00	807.6
26	74.0	1.0	49.0	12.0	2850	2250	1600	43.0	210.90	2.25	78.40	516.00	807.6
27	74.0	1.0	49.0	12.0	2850	2250	1600	43.0	210.90	2.25	78.40	516.00	807.6
28	74.0	1.0	49.0	12.0	2850	2250	1600	43.0	210.90	2.25	78.40	516.00	807.6
29	74.0	1.0	49.0	12.0	2850	2250	1600	43.0	210.90	2.25	78.40	516.00	807.6
30	74.0	1.0	49.0	12.0	2850	2250	1600	43.0	210.90	2.25	78.40	516.00	807.6

SOURCE : AREA, TABLE 9.4
YIELD, TABLE 9.5

BEST AVAILABLE DOCUMENT

516

TABLE 9.7.8

NORMAL GROWTH IN AGRICULTURE :

PROJECTION OF AREA, YIELD AND PRODUCTION OF MAJOR CROPS, ROHRI SYSTEM

YEARS	A R E A, 000 ha.				YIELD, Kg/ha.				PRODUCTION, 000 tonnes				
	WHEAT	RICE	SEED COTTON	SUGAR CANE	WHEAT	RICE PADDY	SEED COTTON	SUGAR CANE t/ha	WHEAT	RICE PADDY	SEED COTTON	SUGAR CANE	TOTAL
Base year 0	21.7	1.2	15.9	1.9	1943	2750	1193	37.4	42.16	3.30	18.97	71.06	135.5
1	21.8	1.2	15.9	1.9	1971	2793	1208	37.5	42.91	3.32	19.16	71.31	136.7
2	21.8	1.2	15.8	1.9	1999	2835	1224	37.7	43.65	3.35	19.35	71.55	137.9
3	21.9	1.2	15.8	1.9	2027	2878	1239	37.8	44.40	3.37	19.53	71.80	139.1
4	22.0	1.2	15.7	1.9	2054	2920	1254	37.9	45.16	3.39	19.72	72.05	140.3
5	22.1	1.2	15.7	1.9	2082	2963	1270	38.1	45.91	3.41	19.90	72.29	141.5
6	22.1	1.1	15.6	1.9	2110	3005	1285	38.2	46.68	3.43	20.09	72.54	142.7
7	22.2	1.1	15.6	1.9	2138	3048	1300	38.3	47.44	3.44	20.27	72.79	143.9
8	22.3	1.1	15.5	1.9	2166	3090	1316	38.4	48.21	3.46	20.45	73.04	145.2
9	22.3	1.1	15.5	1.9	2194	3133	1331	38.6	48.98	3.48	20.63	73.28	146.4
10	22.4	1.1	15.5	1.9	2222	3175	1347	38.7	49.76	3.49	20.80	73.53	147.6
11	22.5	1.1	15.4	1.9	2249	3218	1362	38.8	50.54	3.51	20.98	73.78	148.8
12	22.5	1.1	15.4	1.9	2277	3260	1377	39.0	51.33	3.52	21.15	74.02	150.0
13	22.6	1.1	15.3	1.9	2305	3303	1393	39.1	52.12	3.53	21.33	74.27	151.2
14	22.7	1.1	15.3	1.9	2333	3345	1408	39.2	52.91	3.55	21.50	74.52	152.5
15	22.8	1.1	15.2	1.9	2361	3388	1423	39.4	53.71	3.56	21.67	74.77	153.7
16	22.8	1.0	15.2	1.9	2389	3430	1439	39.5	54.51	3.57	21.84	75.01	154.9
17	22.9	1.0	15.1	1.9	2416	3473	1454	39.6	55.31	3.58	22.01	75.26	156.2
18	23.0	1.0	15.1	1.9	2444	3515	1469	39.7	56.12	3.59	22.17	75.51	157.4
19	23.0	1.0	15.0	1.9	2472	3558	1485	39.9	56.93	3.59	22.34	75.75	158.6
20	23.1	1.0	15.0	1.9	2500	3600	1500	40.0	57.75	3.60	22.50	76.00	159.9
21	23.1	1.0	15.0	1.9	2500	3600	1500	40.0	57.75	3.60	22.50	76.00	159.9
22	23.1	1.0	15.0	1.9	2500	3600	1500	40.0	57.75	3.60	22.50	76.00	159.9
23	23.1	1.0	15.0	1.9	2500	3600	1500	40.0	57.75	3.60	22.50	76.00	159.9
24	23.1	1.0	15.0	1.9	2500	3600	1500	40.0	57.75	3.60	22.50	76.00	159.9
25	23.1	1.0	15.0	1.9	2500	3600	1500	40.0	57.75	3.60	22.50	76.00	159.9
26	23.1	1.0	15.0	1.9	2500	3600	1500	40.0	57.75	3.60	22.50	76.00	159.9
27	23.1	1.0	15.0	1.9	2500	3600	1500	40.0	57.75	3.60	22.50	76.00	159.9
28	23.1	1.0	15.0	1.9	2500	3600	1500	40.0	57.75	3.60	22.50	76.00	159.9
29	23.1	1.0	15.0	1.9	2500	3600	1500	40.0	57.75	3.60	22.50	76.00	159.9
30	23.1	1.0	15.0	1.9	2500	3600	1500	40.0	57.75	3.60	22.50	76.00	159.9

SOURCE : AREA, TABLE 9.4
YIELD, TABLE 9.5

BEST AVAILABLE DOCUMENT

TABLE 9.7.9

NORMAL GROWTH IN AGRICULTURE :

PROJECTION OF AREA, YIELD AND PRODUCTION OF MAJOR CROPS, DADU SYSTEM

YEARS	AREA, 000 ha.				YIELD, Kg/ha.				PRODUCTION, 000 tonnes				
	WHEAT	RICE	SEED COTTON	SUGAR CANE	WHEAT	RICE PADDY	SEED COTTON	SUGAR CANE t/ha	WHEAT	RICE PADDY	SEED COTTON	SUGAR CANE	TOTAL
Base year 0	8.6	6.5	0.8	0.6	1408	4000	923	37.6	12.11	26.00	0.74	22.56	61.4
1	8.5	6.6	0.8	0.6	1418	4040	934	37.8	12.08	26.56	0.76	23.42	62.8
2	8.4	6.7	0.8	0.6	1427	4080	946	37.9	12.05	27.13	0.78	24.28	64.2
3	8.4	6.7	0.8	0.7	1437	4120	957	38.1	12.01	27.71	0.79	25.15	65.7
4	8.3	6.8	0.8	0.7	1446	4160	968	38.3	11.98	28.29	0.81	26.03	67.1
5	8.2	6.9	0.9	0.7	1456	4200	980	38.5	11.94	28.88	0.83	26.92	68.6
6	8.1	7.0	0.9	0.7	1466	4240	991	38.6	11.90	29.47	0.85	27.81	70.0
7	8.0	7.0	0.9	0.7	1475	4280	1002	38.8	11.86	30.07	0.87	28.70	71.5
8	8.0	7.1	0.9	0.8	1485	4320	1014	39.0	11.82	30.67	0.89	29.61	73.0
9	7.9	7.2	0.9	0.8	1494	4360	1025	39.1	11.78	31.28	0.91	30.52	74.5
10	7.8	7.3	0.9	0.8	1504	4400	1037	39.3	11.73	31.90	0.93	31.44	76.0
11	7.7	7.3	0.9	0.8	1514	4440	1048	39.5	11.68	32.52	0.95	32.37	77.5
12	7.6	7.4	0.9	0.8	1523	4480	1059	39.6	11.64	33.15	0.97	33.30	79.1
13	7.6	7.5	0.9	0.9	1533	4520	1071	39.8	11.59	33.79	1.00	34.24	80.6
14	7.5	7.6	0.9	0.9	1542	4560	1082	40.0	11.54	34.43	1.02	35.18	82.2
15	7.4	7.6	1.0	0.9	1552	4600	1093	40.2	11.48	35.08	1.04	36.14	83.7
16	7.3	7.7	1.0	0.9	1562	4640	1105	40.3	11.43	35.73	1.06	37.09	85.3
17	7.2	7.8	1.0	0.9	1571	4680	1116	40.5	11.38	36.39	1.08	38.06	86.9
18	7.2	7.9	1.0	1.0	1581	4720	1127	40.7	11.32	37.05	1.10	39.03	88.5
19	7.1	7.9	1.0	1.0	1590	4760	1139	40.8	11.26	37.72	1.13	40.01	90.1
20	7.0	8.0	1.0	1.0	1600	4800	1150	41.0	11.20	38.40	1.15	41.00	91.8
21	7.0	8.0	1.0	1.0	1600	4800	1150	41.0	11.20	38.40	1.15	41.00	91.8
22	7.0	8.0	1.0	1.0	1600	4800	1150	41.0	11.20	38.40	1.15	41.00	91.8
23	7.0	8.0	1.0	1.0	1600	4800	1150	41.0	11.20	38.40	1.15	41.00	91.8
24	7.0	8.0	1.0	1.0	1600	4800	1150	41.0	11.20	38.40	1.15	41.00	91.8
25	7.0	8.0	1.0	1.0	1600	4800	1150	41.0	11.20	38.40	1.15	41.00	91.8
26	7.0	8.0	1.0	1.0	1600	4800	1150	41.0	11.20	38.40	1.15	41.00	91.8
27	7.0	8.0	1.0	1.0	1600	4800	1150	41.0	11.20	38.40	1.15	41.00	91.8
28	7.0	8.0	1.0	1.0	1600	4800	1150	41.0	11.20	38.40	1.15	41.00	91.8
29	7.0	8.0	1.0	1.0	1600	4800	1150	41.0	11.20	38.40	1.15	41.00	91.8
30	7.0	8.0	1.0	1.0	1600	4800	1150	41.0	11.20	38.40	1.15	41.00	91.8

SOURCE : AREA, TABLE 9.4
YIELD, TABLE 9.5

BEST AVAILABLE DOCUMENT

518

TABLE 9.7.10

NORMAL GROWTH IN AGRICULTURE :

PROJECTION OF AREA, YIELD AND PRODUCTION OF MAJOR CROPS, KABUL RIVER SYSTEM

YEARS	A R E A, 000 ha.				YIELD, Kg/ha.				PRODUCTION, 000 tonnes				
	WHEAT	RICE	MAIZE	SUGAR CANE	WHEAT	RICE PADDY	MAIZE	SUGAR CANE t/ha	WHEAT	RICE PADDY	MAIZE	SUGAR CANE	TOTAL
Base year 0	19.2	0.0	9.6	11.5	1875	0	1756	41.1	36.00	0.00	16.86	472.65	525.5
1	19.2	0.0	9.6	11.5	1896	0	1768	41.1	36.39	0.00	17.01	472.14	525.5
2	19.2	0.0	9.6	11.5	1918	0	1780	41.2	36.78	0.00	17.16	471.63	525.6
3	19.2	0.0	9.7	11.4	1939	0	1793	41.2	37.17	0.00	17.32	471.11	525.6
4	19.2	0.0	9.7	11.4	1960	0	1805	41.3	37.55	0.00	17.47	470.59	525.6
5	19.2	0.0	9.7	11.4	1981	0	1817	41.3	37.94	0.00	17.62	470.07	525.6
6	19.1	0.0	9.7	11.4	2003	0	1829	41.4	38.33	0.00	17.78	469.55	525.7
7	19.1	0.0	9.7	11.3	2024	0	1841	41.4	38.71	0.00	17.94	469.02	525.7
8	19.1	0.0	9.8	11.3	2045	0	1854	41.5	39.10	0.00	18.09	468.50	525.7
9	19.1	0.0	9.8	11.3	2066	0	1866	41.5	39.49	0.00	18.25	467.97	525.7
10	19.1	0.0	9.8	11.3	2088	0	1878	41.6	39.87	0.00	18.40	467.44	525.7
11	19.1	0.0	9.8	11.2	2109	0	1890	41.6	40.26	0.00	18.56	466.90	525.7
12	19.1	0.0	9.8	11.2	2130	0	1902	41.6	40.64	0.00	18.72	466.37	525.7
13	19.1	0.0	9.9	11.2	2151	0	1915	41.7	41.02	0.00	18.88	465.83	525.7
14	19.1	0.0	9.9	11.2	2173	0	1927	41.7	41.41	0.00	19.04	465.29	525.7
15	19.1	0.0	9.9	11.1	2194	0	1939	41.8	41.79	0.00	19.20	464.75	525.7
16	19.0	0.0	9.9	11.1	2215	0	1951	41.8	42.17	0.00	19.36	464.20	525.7
17	19.0	0.0	9.9	11.1	2236	0	1963	41.9	42.56	0.00	19.52	463.65	525.7
18	19.0	0.0	10.0	11.1	2258	0	1976	41.9	42.94	0.00	19.68	463.11	525.7
19	19.0	0.0	10.0	11.0	2279	0	1988	42.0	43.32	0.00	19.84	462.55	525.7
20	19.0	0.0	10.0	11.0	2300	0	2000	42.0	43.70	0.00	20.00	462.00	525.7
21	19.0	0.0	10.0	11.0	2300	0	2000	42.0	43.70	0.00	20.00	462.00	525.7
22	19.0	0.0	10.0	11.0	2300	0	2000	42.0	43.70	0.00	20.00	462.00	525.7
23	19.0	0.0	10.0	11.0	2300	0	2000	42.0	43.70	0.00	20.00	462.00	525.7
24	19.0	0.0	10.0	11.0	2300	0	2000	42.0	43.70	0.00	20.00	462.00	525.7
25	19.0	0.0	10.0	11.0	2300	0	2000	42.0	43.70	0.00	20.00	462.00	525.7
26	19.0	0.0	10.0	11.0	2300	0	2000	42.0	43.70	0.00	20.00	462.00	525.7
27	19.0	0.0	10.0	11.0	2300	0	2000	42.0	43.70	0.00	20.00	462.00	525.7
28	19.0	0.0	10.0	11.0	2300	0	2000	42.0	43.70	0.00	20.00	462.00	525.7
29	19.0	0.0	10.0	11.0	2300	0	2000	42.0	43.70	0.00	20.00	462.00	525.7
30	19.0	0.0	10.0	11.0	2300	0	2000	42.0	43.70	0.00	20.00	462.00	525.7

SOURCE : AREA, TABLE 9.4
YIELD, TABLE 9.5

BEST AVAILABLE DOCUMENT

TABLE 9.7.11

NORMAL GROWTH IN AGRICULTURE :

PROJECTION OF AREA, YIELD AND PRODUCTION OF MAJOR CROPS, PAHARPUR SYSTEM

YEARS	AREA, 000 ha.				YIELD, Kg/ha.				PRODUCTION, 000 tonnes				
	WHEAT	RICE	MAIZE	SUGAR CANE	WHEAT	RICE PADDY	MAIZE	SUGAR CANE t/ha	WHEAT	RICE PADDY	MAIZE	SUGAR CANE	TOTAL
Base year 0	10.5	0.0	0.2	0.4	1262	0	1333	26.7	13.25	0.00	0.27	10.68	24.2
1	10.4	0.0	0.2	0.4	1276	0	1356	27.1	13.31	0.00	0.33	11.66	25.3
2	10.4	0.0	0.3	0.5	1291	0	1380	27.5	13.36	0.00	0.39	12.66	26.4
3	10.3	0.0	0.3	0.5	1305	0	1403	27.9	13.41	0.00	0.45	13.69	27.6
4	10.2	0.0	0.4	0.5	1320	0	1426	28.4	13.46	0.00	0.51	14.75	28.7
5	10.1	0.0	0.4	0.6	1334	0	1450	28.8	13.51	0.00	0.58	15.83	29.9
6	10.1	0.0	0.4	0.6	1348	0	1473	29.2	13.55	0.00	0.65	16.93	31.1
7	10.0	0.0	0.5	0.6	1363	0	1496	29.6	13.59	0.00	0.72	18.06	32.4
8	9.9	0.0	0.5	0.6	1377	0	1520	30.0	13.63	0.00	0.79	19.21	33.6
9	9.8	0.0	0.6	0.7	1392	0	1543	30.4	13.67	0.00	0.86	20.39	34.9
10	9.8	0.0	0.6	0.7	1406	0	1567	30.9	13.71	0.00	0.94	21.60	36.2
11	9.7	0.0	0.6	0.7	1420	0	1590	31.3	13.74	0.00	1.02	22.82	37.6
12	9.6	0.0	0.7	0.8	1435	0	1613	31.7	13.77	0.00	1.10	24.08	38.9
13	9.5	0.0	0.7	0.8	1449	0	1637	32.1	13.80	0.00	1.18	25.36	40.3
14	9.5	0.0	0.8	0.8	1464	0	1660	32.5	13.83	0.00	1.26	26.66	41.8
15	9.4	0.0	0.8	0.9	1478	0	1683	32.9	13.86	0.00	1.35	27.99	43.2
16	9.3	0.0	0.8	0.9	1492	0	1707	33.3	13.88	0.00	1.43	29.34	44.7
17	9.2	0.0	0.9	0.9	1507	0	1730	33.8	13.90	0.00	1.52	30.72	46.1
18	9.2	0.0	0.9	0.9	1521	0	1753	34.2	13.92	0.00	1.61	32.12	47.7
19	9.1	0.0	1.0	1.0	1536	0	1777	34.6	13.94	0.00	1.71	33.55	49.2
20	9.0	0.0	1.0	1.0	1550	0	1800	35.0	13.95	0.00	1.80	35.00	50.8
21	9.0	0.0	1.0	1.0	1550	0	1800	35.0	13.95	0.00	1.80	35.00	50.8
22	9.0	0.0	1.0	1.0	1550	0	1800	35.0	13.95	0.00	1.80	35.00	50.8
23	9.0	0.0	1.0	1.0	1550	0	1800	35.0	13.95	0.00	1.80	35.00	50.8
24	9.0	0.0	1.0	1.0	1550	0	1800	35.0	13.95	0.00	1.80	35.00	50.8
25	9.0	0.0	1.0	1.0	1550	0	1800	35.0	13.95	0.00	1.80	35.00	50.8
26	9.0	0.0	1.0	1.0	1550	0	1800	35.0	13.95	0.00	1.80	35.00	50.8
27	9.0	0.0	1.0	1.0	1550	0	1800	35.0	13.95	0.00	1.80	35.00	50.8
28	9.0	0.0	1.0	1.0	1550	0	1800	35.0	13.95	0.00	1.80	35.00	50.8
29	9.0	0.0	1.0	1.0	1550	0	1800	35.0	13.95	0.00	1.80	35.00	50.8
30	9.0	0.0	1.0	1.0	1550	0	1800	35.0	13.95	0.00	1.80	35.00	50.8

SOURCE : AREA, TABLE 9.4
YIELD, TABLE 9.5

BEST AVAILABLE COPY

TABLE 9.7.12

NORMAL GROWTH IN AGRICULTURE :

PROJECTION OF AREA, YIELD AND PRODUCTION OF MAJOR CROPS, MARAWAT SYSTEM

YEARS	A R E A, 000 ha.				YIELD, Kg/ha.				PRODUCTION, 000 tonnes				
	WHEAT	RICE	MAIZE	SUGAR CANE	WHEAT	RICE PADDY	MAIZE	SUGAR CANE t/ha	WHEAT	RICE PADDY	MAIZE	SUGAR CANE	TOTAL
Base year 0	100.5	0.0	16.7	2.2	960	0	1732	25.2	96.48	0.00	28.92	55.44	180.8
1	100.4	0.0	16.6	2.3	987	0	1735	25.4	99.12	0.00	28.83	59.53	187.5
2	100.4	0.0	16.5	2.5	1014	0	1739	25.7	101.75	0.00	28.74	63.69	194.2
3	100.3	0.0	16.4	2.6	1041	0	1742	25.9	104.39	0.00	28.65	67.91	200.9
4	100.2	0.0	16.4	2.8	1068	0	1746	26.2	107.01	0.00	28.56	72.20	207.8
5	100.1	0.0	16.3	2.9	1095	0	1749	26.4	109.64	0.00	28.46	76.56	214.7
6	100.1	0.0	16.2	3.0	1122	0	1752	26.6	112.26	0.00	28.37	80.99	221.6
7	100.0	0.0	16.1	3.2	1149	0	1756	26.9	114.87	0.00	28.28	85.48	228.6
8	99.9	0.0	16.0	3.3	1176	0	1759	27.1	117.48	0.00	28.18	90.04	235.7
9	99.8	0.0	15.9	3.5	1203	0	1763	27.4	120.09	0.00	28.09	94.67	242.8
10	99.8	0.0	15.9	3.6	1230	0	1766	27.6	122.69	0.00	27.99	99.36	250.0
11	99.7	0.0	15.8	3.7	1257	0	1769	27.8	125.29	0.00	27.89	104.12	257.3
12	99.6	0.0	15.7	3.9	1284	0	1773	28.1	127.89	0.00	27.80	108.95	264.6
13	99.5	0.0	15.6	4.0	1311	0	1776	28.3	130.48	0.00	27.70	113.85	272.0
14	99.5	0.0	15.5	4.2	1338	0	1780	28.6	133.06	0.00	27.60	118.81	279.5
15	99.4	0.0	15.4	4.3	1365	0	1783	28.8	135.65	0.00	27.50	123.84	287.0
16	99.3	0.0	15.3	4.4	1392	0	1786	29.0	138.23	0.00	27.40	128.94	294.6
17	99.2	0.0	15.3	4.6	1419	0	1790	29.3	140.80	0.00	27.30	134.10	302.2
18	99.2	0.0	15.2	4.7	1446	0	1793	29.5	143.37	0.00	27.20	139.33	309.9
19	99.1	0.0	15.1	4.9	1473	0	1797	29.8	145.94	0.00	27.10	144.63	317.7
20	99.0	0.0	15.0	5.0	1500	0	1800	30.0	148.50	0.00	27.00	150.00	325.5
21	99.0	0.0	15.0	5.0	1500	0	1800	30.0	148.50	0.00	27.00	150.00	325.5
22	99.0	0.0	15.0	5.0	1500	0	1800	30.0	148.50	0.00	27.00	150.00	325.5
23	99.0	0.0	15.0	5.0	1500	0	1800	30.0	148.50	0.00	27.00	150.00	325.5
24	99.0	0.0	15.0	5.0	1500	0	1800	30.0	148.50	0.00	27.00	150.00	325.5
25	99.0	0.0	15.0	5.0	1500	0	1800	30.0	148.50	0.00	27.00	150.00	325.5
26	99.0	0.0	15.0	5.0	1500	0	1800	30.0	148.50	0.00	27.00	150.00	325.5
27	99.0	0.0	15.0	5.0	1500	0	1800	30.0	148.50	0.00	27.00	150.00	325.5
28	99.0	0.0	15.0	5.0	1500	0	1800	30.0	148.50	0.00	27.00	150.00	325.5
29	99.0	0.0	15.0	5.0	1500	0	1800	30.0	148.50	0.00	27.00	150.00	325.5
30	99.0	0.0	15.0	5.0	1500	0	1800	30.0	148.50	0.00	27.00	150.00	325.5

SOURCE : AREA, TABLE 9.4
YIELD, TABLE 9.5

BEST AVAILABLE DOCUMENT

521

TABLE 9.7.13

NORMAL GROWTH IN AGRICULTURE :

PROJECTION OF AREA, YIELD AND PRODUCTION OF MAJOR CROPS, UPPER SWAT SYSTEM

YEARS	A R E A, 000 ha.				YIELD, Kg/ha.				PRODUCTION, 000 tonnes				
	WHEAT	RICE	MAIZE	SUGAR CANE	WHEAT	RICE PADDY	MAIZE	SUGAR CANE t/ha	WHEAT	RICE PADDY	MAIZE	SUGAR CANE	TOTAL
Base year 0	130.4	97.0	92.2	36.2	1073	1595	1750	30.5	139.92	154.72	161.35	1104.10	1560.1
1	129.5	97.0	92.8	36.5	1144	1610	1788	31.1	148.22	156.17	165.81	1135.33	1605.5
2	128.6	97.0	93.3	36.9	1216	1626	1825	31.7	156.40	157.62	170.31	1166.94	1651.3
3	127.8	97.0	93.9	37.2	1287	1641	1863	32.2	164.45	159.08	174.85	1198.93	1697.3
4	126.9	96.9	94.4	37.5	1358	1656	1900	32.8	172.38	160.53	179.44	1231.31	1743.7
5	126.0	96.9	95.0	37.9	1430	1671	1938	33.4	180.18	161.99	184.06	1264.08	1790.3
6	125.1	96.9	95.6	38.2	1501	1687	1975	34.0	187.85	163.44	188.73	1297.23	1837.3
7	124.3	96.9	96.1	38.5	1572	1702	2013	34.5	195.41	164.89	193.44	1330.77	1884.5
8	123.4	96.9	96.7	38.9	1644	1717	2050	35.1	202.83	166.34	198.19	1364.69	1932.1
9	122.5	96.9	97.2	39.2	1715	1732	2088	35.7	210.13	167.79	202.99	1399.00	1979.9
10	121.6	96.9	97.8	39.6	1787	1748	2125	36.3	217.31	169.25	207.83	1433.69	2028.1
11	120.8	96.8	98.4	39.9	1858	1763	2163	36.8	224.36	170.70	212.70	1468.77	2076.5
12	119.9	96.8	98.9	40.2	1929	1778	2200	37.4	231.29	172.15	217.62	1504.23	2125.3
13	119.0	96.8	99.5	40.6	2001	1793	2238	38.0	238.09	173.60	222.59	1540.08	2174.3
14	118.1	96.8	100.0	40.9	2072	1809	2275	38.6	244.77	175.04	227.59	1576.31	2223.7
15	117.3	96.8	100.6	41.2	2143	1824	2313	39.1	251.32	176.49	232.64	1612.93	2273.4
16	116.4	96.8	101.2	41.6	2215	1839	2350	39.7	257.74	177.94	237.73	1649.93	2323.3
17	115.5	96.7	101.7	41.9	2286	1854	2388	40.3	264.05	179.39	242.86	1687.32	2373.6
18	114.6	96.7	102.3	42.2	2357	1870	2425	40.9	270.22	180.84	248.03	1725.10	2424.2
19	113.8	96.7	102.8	42.6	2429	1885	2463	41.4	276.27	182.28	253.24	1763.26	2475.1
20	112.9	96.7	103.4	42.9	2500	1900	2500	42.0	282.20	183.73	258.50	1801.80	2526.2
21	112.9	96.7	103.4	42.9	2500	1900	2500	42.0	282.20	183.73	258.50	1801.80	2526.2
22	112.9	96.7	103.4	42.9	2500	1900	2500	42.0	282.20	183.73	258.50	1801.80	2526.2
23	112.9	96.7	103.4	42.9	2500	1900	2500	42.0	282.20	183.73	258.50	1801.80	2526.2
24	112.9	96.7	103.4	42.9	2500	1900	2500	42.0	282.20	183.73	258.50	1801.80	2526.2
25	112.9	96.7	103.4	42.9	2500	1900	2500	42.0	282.20	183.73	258.50	1801.80	2526.2
26	112.9	96.7	103.4	42.9	2500	1900	2500	42.0	282.20	183.73	258.50	1801.80	2526.2
27	112.9	96.7	103.4	42.9	2500	1900	2500	42.0	282.20	183.73	258.50	1801.80	2526.2
28	112.9	96.7	103.4	42.9	2500	1900	2500	42.0	282.20	183.73	258.50	1801.80	2526.2
29	112.9	96.7	103.4	42.9	2500	1900	2500	42.0	282.20	183.73	258.50	1801.80	2526.2
30	112.9	96.7	103.4	42.9	2500	1900	2500	42.0	282.20	183.73	258.50	1801.80	2526.2

SOURCE : AREA, TABLE 9.4
YIELD, TABLE 9.5

BEST AVAILABLE DOCUMENT

522

Table 9.8

Increase in Agricultural Yields

Attributable to Canal Roads Project

SYSTEMS	Increment Above Normal growth, %			
		Year 10		Year 20
PUNJAB				
JHANG BRANCH		20%		35%
GOGERA BRANCH		20%		35%
DEPALPUR CANAL		10%		20%
MAILSI CANAL		7.5%		10%
SIND				
NASIR BRANCH		15%		25%
JAMRAO & MITHRAO		15%		25%
GOTKI FEEDER				20%
ROHRI CANAL				20%
DADU CANAL				20%
NWFP				
KABUL RIVER CANAL				20%
PHARPUR CANAL		25%		35%
MARWAT CANAL		25%		30%
UPPER SWAT CANAL				20%

SOURCE : Consultants' Estimates

BEST AVAILABLE DOCUMENT

TABLE 9.9.1

ACCELERATED GROWTH IN AGRICULTURE :

PROJECTION OF AREA, YIELD AND PRODUCTION OF MAJOR CROPS, WITH CANAL ROAD PROJECT, JHANG SYSTEM

YEARS	AREA, 000 ha.				YIELD, Kg/ha.				PRODUCTION, 000 tonnes				
	WHEAT	RICE	SEED COTTON	SUGAR CANE	WHEAT	RICE PADDY	SEED COTTON	SUGAR CANE t/ha	WHEAT	RICE PADDY	SEED COTTON	SUGAR CANE	TOTAL
Base year 0	151.2	17.3	42.7	23.8	1829	1688	1079	33.7	276.54	29.20	46.07	802.06	1153.88
1	151.4	17.0	42.8	23.8	1858	1729	1089	33.8	281.31	29.36	46.56	805.14	1162.37
2	151.7	16.7	42.8	23.9	1893	1776	1103	34.0	287.15	29.61	47.22	810.98	1174.96
3	151.9	16.4	42.9	23.8	1948	1842	1127	34.6	295.87	30.13	48.33	824.21	1198.54
4	152.2	16.0	43.0	23.8	2028	1934	1165	35.6	308.55	31.02	50.06	847.61	1237.24
5	152.4	15.7	43.0	23.9	2132	2049	1217	36.9	324.84	32.22	52.36	880.26	1289.68
6	152.6	15.4	43.1	23.9	2235	2164	1269	38.3	341.19	33.35	54.66	912.94	1342.14
7	152.9	15.1	43.2	23.9	2311	2251	1305	39.2	353.27	33.98	56.30	934.55	1378.10
8	153.1	14.8	43.2	23.9	2386	2339	1340	40.0	365.39	34.56	57.94	956.18	1414.07
9	153.4	14.5	43.3	23.9	2462	2426	1376	40.9	377.55	35.09	59.58	977.83	1450.05
10	153.6	14.2	43.4	23.9	2537	2513	1412	41.8	389.74	35.56	61.23	999.50	1486.03
11	153.8	13.8	43.4	23.9	2608	2599	1443	42.5	401.16	35.96	62.66	1016.13	1515.91
12	154.1	13.5	43.5	23.9	2678	2685	1474	43.2	412.61	36.30	64.10	1032.77	1545.79
13	154.3	13.2	43.5	23.9	2748	2771	1505	43.9	424.10	36.60	65.54	1049.43	1575.66
14	154.6	12.9	43.6	23.9	2818	2858	1536	44.5	435.62	36.84	66.98	1066.10	1605.53
15	154.8	12.6	43.7	24.0	2889	2944	1567	45.2	447.17	37.02	68.43	1082.78	1635.40
16	155.0	12.3	43.7	24.0	2959	3030	1598	45.9	458.76	37.15	69.88	1099.48	1665.27
17	155.3	11.9	43.8	24.0	3029	3116	1629	46.6	470.38	37.22	71.34	1116.19	1695.13
18	155.5	11.6	43.9	24.0	3099	3203	1659	47.2	482.03	37.25	72.80	1132.91	1724.99
19	155.8	11.3	43.9	24.0	3170	3289	1690	47.9	493.72	37.21	74.27	1149.65	1754.85
20	156.0	11.0	44.0	24.0	3240	3375	1721	48.6	505.44	37.12	75.74	1166.40	1784.70
21	156.0	11.0	44.0	24.0	3240	3375	1721	48.6	505.44	37.12	75.74	1166.40	1784.70
22	156.0	11.0	44.0	24.0	3240	3375	1721	48.6	505.44	37.12	75.74	1166.40	1784.70
23	156.0	11.0	44.0	24.0	3240	3375	1721	48.6	505.44	37.12	75.74	1166.40	1784.70
24	156.0	11.0	44.0	24.0	3240	3375	1721	48.6	505.44	37.12	75.74	1166.40	1784.70
25	156.0	11.0	44.0	24.0	3240	3375	1721	48.6	505.44	37.12	75.74	1166.40	1784.70
26	156.0	11.0	44.0	24.0	3240	3375	1721	48.6	505.44	37.12	75.74	1166.40	1784.70
27	156.0	11.0	44.0	24.0	3240	3375	1721	48.6	505.44	37.12	75.74	1166.40	1784.70
28	156.0	11.0	44.0	24.0	3240	3375	1721	48.6	505.44	37.12	75.74	1166.40	1784.70
29	156.0	11.0	44.0	24.0	3240	3375	1721	48.6	505.44	37.12	75.74	1166.40	1784.70
30	156.0	11.0	44.0	24.0	3240	3375	1721	48.6	505.44	37.12	75.74	1166.40	1784.70

SOURCE : AREA, TABLE 9.4
YIELD, TABLE 9.5

BEST AVAILABLE DOCUMENT

524

TABLE 9.9.2

ACCELERATED GROWTH IN AGRICULTURE :

PROJECTION OF AREA, YIELD AND PRODUCTION OF MAJOR CROPS, WITH CANAL ROAD PROJECT, GOGERA SYSTEM

YEARS	AREA, 000 ha.				YIELD, Kg/ha.				PRODUCTION, 000 tonnes				
	WHEAT	RICE	SEED COTTON	SUGAR CANE	WHEAT	RICE PADDY	SEED COTTON	SUGAR CANE t/ha	WHEAT	RICE PADDY	SEED COTTON	SUGAR CANE	TOTAL
Base year 0	180.6	19.7	15.3	63.4	1988	2000	851	37.0	359.03	39.40	13.02	2345.80	2757.25
1	181.6	19.4	15.0	63.0	2014	2045	858	37.1	365.61	39.60	12.91	2338.41	2756.53
2	182.5	19.0	14.8	62.7	2047	2098	869	37.3	373.60	39.93	12.83	2338.89	2765.25
3	183.5	18.7	14.5	62.3	2100	2173	888	37.9	385.32	40.63	12.88	2360.24	2799.06
4	184.5	18.4	14.2	61.9	2180	2278	918	38.9	402.20	41.82	13.07	2409.93	2867.02
5	185.5	18.0	14.0	61.6	2286	2410	958	40.4	423.85	43.44	13.39	2484.84	2965.53
6	186.4	17.7	13.7	61.2	2391	2542	999	41.8	445.72	44.97	13.69	2558.68	3063.06
7	187.4	17.4	13.4	60.8	2466	2642	1027	42.8	462.18	45.85	13.80	2600.64	3122.47
8	188.4	17.0	13.2	60.4	2542	2741	1055	43.7	478.79	46.65	13.90	2641.90	3181.24
9	189.3	16.7	12.9	60.1	2617	2841	1083	44.7	495.54	47.39	13.98	2682.46	3239.38
10	190.3	16.4	12.7	59.7	2693	2940	1111	45.6	512.44	48.07	14.05	2722.32	3296.88
11	191.3	16.0	12.4	59.3	2761	3038	1135	46.3	528.10	48.65	14.05	2747.28	3338.07
12	192.2	15.7	12.1	59.0	2829	3135	1158	47.0	543.89	49.16	14.04	2771.71	3378.80
13	193.2	15.3	11.9	58.6	2897	3233	1182	47.7	559.82	49.60	14.02	2795.62	3419.06
14	194.2	15.0	11.6	58.2	2966	3330	1206	48.4	575.88	49.98	13.98	2819.01	3458.85
15	195.2	14.7	11.3	57.9	3034	3428	1230	49.1	592.07	50.30	13.93	2841.88	3498.18
16	196.1	14.3	11.1	57.5	3102	3525	1254	49.8	608.39	50.55	13.87	2864.23	3537.04
17	197.1	14.0	10.8	57.1	3170	3623	1278	50.5	624.84	50.73	13.80	2886.05	3575.43
18	198.1	13.7	10.5	56.7	3239	3720	1302	51.2	641.43	50.85	13.71	2907.36	3613.35
19	199.0	13.3	10.3	56.4	3307	3818	1326	51.9	658.15	50.91	13.61	2928.14	3650.81
20	200.0	13.0	10.0	56.0	3375	3915	1350	52.6	675.00	50.90	13.50	2948.40	3687.79
21	200.0	13.0	10.0	56.0	3375	3915	1350	52.6	675.00	50.90	13.50	2948.40	3687.79
22	200.0	13.0	10.0	56.0	3375	3915	1350	52.6	675.00	50.90	13.50	2948.40	3687.79
23	200.0	13.0	10.0	56.0	3375	3915	1350	52.6	675.00	50.90	13.50	2948.40	3687.79
24	200.0	13.0	10.0	56.0	3375	3915	1350	52.6	675.00	50.90	13.50	2948.40	3687.79
25	200.0	13.0	10.0	56.0	3375	3915	1350	52.6	675.00	50.90	13.50	2948.40	3687.79
26	200.0	13.0	10.0	56.0	3375	3915	1350	52.6	675.00	50.90	13.50	2948.40	3687.79
27	200.0	13.0	10.0	56.0	3375	3915	1350	52.6	675.00	50.90	13.50	2948.40	3687.79
28	200.0	13.0	10.0	56.0	3375	3915	1350	52.6	675.00	50.90	13.50	2948.40	3687.79
29	200.0	13.0	10.0	56.0	3375	3915	1350	52.6	675.00	50.90	13.50	2948.40	3687.79
30	200.0	13.0	10.0	56.0	3375	3915	1350	52.6	675.00	50.90	13.50	2948.40	3687.79

SOURCE : AREA, TABLE 9.4
YIELD, TABLE 9.5

BEST AVAILABLE DOCUMENT

525

TABLE 9.9.3

ACCELERATED GROWTH IN AGRICULTURE :

PROJECTION OF AREA, YIELD AND PRODUCTION OF MAJOR CROPS, WITH CANAL ROAD PROJECT, DEPALPUR SYSTEM

YEARS	AREA, 000 ha.				YIELD, Kg/ha.				PRODUCTION, 000 tonnes				
	WHEAT	RICE	SEED COTTON	SUGAR CANE	WHEAT	RICE PADDY	SEED COTTON	SUGAR CANE t/ha	WHEAT	RICE PADDY	SEED COTTON	SUGAR CANE	TOTAL
Base year 0	171.2	62.3	31.1	27.5	2380	2515	931	37.3	407.46	156.68	28.95	1025.75	1618.84
1	172.0	62.4	30.2	27.5	2386	2554	934	37.4	410.49	159.35	28.22	1027.15	1625.20
2	172.9	62.5	29.3	27.5	2396	2598	940	37.5	414.23	162.32	27.52	1030.30	1634.37
3	173.7	62.6	28.4	27.4	2417	2655	949	37.9	419.88	166.11	26.93	1038.08	1651.00
4	174.6	62.6	27.5	27.4	2453	2730	964	38.4	428.16	171.02	26.49	1052.24	1677.91
5	175.4	62.7	26.6	27.4	2502	2821	985	39.2	438.88	176.95	26.17	1072.18	1714.18
6	176.2	62.8	25.7	27.4	2552	2912	1005	39.9	449.69	182.90	25.81	1092.07	1750.47
7	177.1	62.9	24.8	27.3	2585	2984	1020	40.4	457.69	187.65	25.25	1104.98	1775.57
8	177.9	63.0	23.9	27.3	2618	3055	1034	40.9	465.76	192.41	24.66	1117.86	1800.69
9	178.8	63.1	23.0	27.3	2651	3127	1048	41.5	473.87	197.18	24.05	1130.72	1825.83
10	179.6	63.2	22.1	27.3	2684	3198	1062	42.0	482.05	201.97	23.42	1143.55	1850.98
11	180.4	63.2	21.1	27.2	2716	3274	1076	42.4	490.00	207.06	22.75	1155.66	1875.47
12	181.3	63.3	20.2	27.2	2747	3351	1090	42.9	498.01	212.16	22.05	1167.75	1899.98
13	182.1	63.4	19.3	27.2	2779	3427	1103	43.4	506.08	217.27	21.33	1179.82	1924.50
14	183.0	63.5	18.4	27.2	2810	3503	1117	43.9	514.19	222.40	20.59	1191.86	1949.04
15	183.8	63.6	17.5	27.1	2842	3579	1131	44.4	522.36	227.54	19.82	1203.88	1973.60
16	184.6	63.7	16.6	27.1	2874	3655	1145	44.9	530.58	232.70	19.03	1215.87	1998.17
17	185.5	63.7	15.7	27.1	2905	3731	1159	45.3	538.86	237.86	18.21	1227.84	2022.76
18	186.3	63.8	14.8	27.1	2937	3808	1172	45.8	547.18	243.04	17.36	1239.78	2047.37
19	187.2	63.9	13.9	27.0	2968	3884	1186	46.3	555.57	248.23	16.49	1251.70	2072.00
20	188.0	64.0	13.0	27.0	3000	3960	1200	46.8	564.00	253.44	15.60	1263.60	2096.64
21	188.0	64.0	13.0	27.0	3000	3960	1200	46.8	564.00	253.44	15.60	1263.60	2096.64
22	188.0	64.0	13.0	27.0	3000	3960	1200	46.8	564.00	253.44	15.60	1263.60	2096.64
23	188.0	64.0	13.0	27.0	3000	3960	1200	46.8	564.00	253.44	15.60	1263.60	2096.64
24	188.0	64.0	13.0	27.0	3000	3960	1200	46.8	564.00	253.44	15.60	1263.60	2096.64
25	188.0	64.0	13.0	27.0	3000	3960	1200	46.8	564.00	253.44	15.60	1263.60	2096.64
26	188.0	64.0	13.0	27.0	3000	3960	1200	46.8	564.00	253.44	15.60	1263.60	2096.64
27	188.0	64.0	13.0	27.0	3000	3960	1200	46.8	564.00	253.44	15.60	1263.60	2096.64
28	188.0	64.0	13.0	27.0	3000	3960	1200	46.8	564.00	253.44	15.60	1263.60	2096.64
29	188.0	64.0	13.0	27.0	3000	3960	1200	46.8	564.00	253.44	15.60	1263.60	2096.64
30	188.0	64.0	13.0	27.0	3000	3960	1200	46.8	564.00	253.44	15.60	1263.60	2096.64

SOURCE : AREA, TABLE 9.4
YIELD, TABLE 9.5

BEST AVAILABLE DOCUMENT

TABLE 9.9.4

ACCELERATED GROWTH IN AGRICULTURE :

PROJECTION OF AREA, YIELD AND PRODUCTION OF MAJOR CROPS, WITH CANAL ROAD PROJECT, MAILSI SYSTEM

YEARS	A R E A, 000 ha.				YIELD, Kg/ha.				PRODUCTION, 000 tonnes				
	WHEAT	RICE	SEED COTTON	SUGAR CANE	WHEAT	RICE PADDY	SEED COTTON	SUGAR CANE t/ha	WHEAT	RICE PADDY	SEED COTTON	SUGAR CANE	TOTAL
Base year 0	155.1	10.7	138.6	19.0	2650	1500	2350	44.5	411.02	16.05	325.71	845.50	1598.28
1	155.2	10.4	139.3	18.6	2683	1538	2365	44.6	416.39	15.94	329.37	826.87	1588.56
2	155.3	10.0	139.9	18.1	2720	1577	2383	44.7	422.35	15.82	333.49	809.19	1580.85
3	155.4	9.7	140.6	17.7	2766	1623	2410	45.0	429.85	15.74	338.81	794.06	1578.46
4	155.5	9.4	141.3	17.2	2827	1678	2448	45.5	439.50	15.71	345.78	782.23	1583.22
5	155.6	9.0	142.0	16.8	2899	1741	2496	46.2	451.08	15.71	354.28	773.13	1594.20
6	155.7	8.7	142.6	16.3	2972	1803	2544	46.8	462.68	15.67	362.85	763.42	1604.61
7	155.8	8.4	143.3	15.9	3030	1856	2580	47.3	471.97	15.51	369.69	749.51	1606.67
8	155.9	8.0	144.0	15.4	3088	1909	2616	47.7	481.27	15.31	376.58	735.19	1608.35
9	156.0	7.7	144.6	15.0	3146	1963	2652	48.2	490.58	15.08	383.51	720.47	1609.64
10	156.1	7.4	145.3	14.5	3204	2016	2688	48.6	499.91	14.81	390.49	705.33	1610.55
11	156.1	7.0	146.0	14.1	3247	2062	2710	48.8	507.04	14.46	395.62	686.19	1603.31
12	156.2	6.7	146.6	13.6	3291	2108	2733	49.0	514.19	14.08	400.77	666.88	1595.91
13	156.3	6.3	147.3	13.2	3335	2153	2756	49.2	521.34	13.66	405.95	647.38	1588.33
14	156.4	6.0	148.0	12.7	3379	2199	2779	49.4	528.50	13.22	411.16	627.71	1580.59
15	156.5	5.7	148.7	12.3	3422	2245	2801	49.6	535.67	12.74	416.41	607.87	1572.68
16	156.6	5.3	149.3	11.8	3466	2291	2824	49.8	542.84	12.24	421.68	587.85	1564.61
17	156.7	5.0	150.0	11.4	3510	2337	2847	50.0	550.03	11.70	426.98	567.65	1556.36
18	156.8	4.7	150.7	10.9	3554	2383	2870	50.2	557.22	11.13	432.32	547.28	1547.95
19	156.9	4.3	151.3	10.5	3597	2429	2892	50.4	564.43	10.53	437.68	526.73	1539.37
20	157.0	4.0	152.0	10.0	3641	2475	2915	50.6	571.64	9.90	443.08	506.00	1530.62
21	157.0	4.0	152.0	10.0	3641	2475	2915	50.6	571.64	9.90	443.08	506.00	1530.62
22	157.0	4.0	152.0	10.0	3641	2475	2915	50.6	571.64	9.90	443.08	506.00	1530.62
23	157.0	4.0	152.0	10.0	3641	2475	2915	50.6	571.64	9.90	443.08	506.00	1530.62
24	157.0	4.0	152.0	10.0	3641	2475	2915	50.6	571.64	9.90	443.08	506.00	1530.62
25	157.0	4.0	152.0	10.0	3641	2475	2915	50.6	571.64	9.90	443.08	506.00	1530.62
26	157.0	4.0	152.0	10.0	3641	2475	2915	50.6	571.64	9.90	443.08	506.00	1530.62
27	157.0	4.0	152.0	10.0	3641	2475	2915	50.6	571.64	9.90	443.08	506.00	1530.62
28	157.0	4.0	152.0	10.0	3641	2475	2915	50.6	571.64	9.90	443.08	506.00	1530.62
29	157.0	4.0	152.0	10.0	3641	2475	2915	50.6	571.64	9.90	443.08	506.00	1530.62
30	157.0	4.0	152.0	10.0	3641	2475	2915	50.6	571.64	9.90	443.08	506.00	1530.62

SOURCE : AREA, TABLE 9.4
YIELD, TABLE 9.5

BEST AVAILABLE DOCUMENT

TABLE 9.9.5

ACCELERATED GROWTH IN AGRICULTURE :

PROJECTION OF AREA, YIELD AND PRODUCTION OF MAJOR CROPS, WITH CANAL ROAD PROJECT, NASIR SYSTEM

YEARS	A R E A, 000 ha.				YIELD, Kg/ha.				PRODUCTION, 000 tonnes				
	WHEAT	RICE	SEED COTTON	SUGAR CANE	WHEAT	RICE PADDY	SEED COTTON	SUGAR CANE t/ha	WHEAT	RICE PADDY	SEED COTTON	SUGAR CANE	TOTAL
Base year 0	13.0	7.0	8.0	12.0	1780	3080	1055	44.5	23.14	21.56	8.44	534.00	587.14
1	13.0	6.9	7.9	12.3	1795	3110	1082	44.6	23.33	21.46	8.50	546.04	599.33
2	13.0	6.8	7.7	12.5	1814	3148	1113	44.8	23.59	21.41	8.57	559.54	613.10
3	13.0	6.7	7.6	12.8	1847	3209	1152	45.3	24.01	21.50	8.70	576.97	631.18
4	13.0	6.6	7.4	13.0	1897	3300	1204	46.2	24.66	21.78	8.91	600.05	655.40
5	13.0	6.5	7.3	13.3	1963	3420	1266	47.4	25.52	22.23	9.18	628.57	685.50
6	13.0	6.4	7.1	13.5	2029	3540	1329	48.7	26.38	22.66	9.44	657.73	716.20
7	13.0	6.3	7.0	13.8	2076	3626	1379	49.6	26.99	22.84	9.58	681.31	740.72
8	13.0	6.2	6.8	14.0	2123	3712	1428	50.4	27.60	23.01	9.71	705.31	765.63
9	13.0	6.1	6.7	14.3	2170	3798	1477	51.2	28.21	23.17	9.82	729.72	790.92
10	13.0	6.0	6.5	14.5	2217	3884	1527	52.0	28.82	23.30	9.92	754.54	816.59
11	13.0	5.9	6.4	14.8	2254	3955	1574	52.6	29.31	23.34	9.99	775.61	838.25
12	13.0	5.8	6.2	15.0	2292	4026	1621	53.1	29.80	23.35	10.05	796.95	860.15
13	13.0	5.7	6.1	15.3	2330	4097	1669	53.7	30.29	23.35	10.10	818.56	882.30
14	13.0	5.6	5.9	15.5	2367	4168	1716	54.2	30.78	23.34	10.12	840.45	904.69
15	13.0	5.5	5.8	15.8	2405	4239	1763	54.8	31.27	23.31	10.14	862.61	927.33
16	13.0	5.4	5.6	16.0	2443	4310	1811	55.3	31.76	23.27	10.14	885.04	950.21
17	13.0	5.3	5.5	16.3	2481	4381	1858	55.9	32.25	23.22	10.13	907.75	973.34
18	13.0	5.2	5.3	16.5	2518	4452	1905	56.4	32.74	23.15	10.10	930.72	996.71
19	13.0	5.1	5.2	16.8	2556	4523	1953	57.0	33.23	23.07	10.06	953.98	1020.33
20	13.0	5.0	5.0	17.0	2594	4594	2000	57.5	33.72	22.97	10.00	977.50	1044.19
21	13.0	5.0	5.0	17.0	2594	4594	2000	57.5	33.72	22.97	10.00	977.50	1044.19
22	13.0	5.0	5.0	17.0	2594	4594	2000	57.5	33.72	22.97	10.00	977.50	1044.19
23	13.0	5.0	5.0	17.0	2594	4594	2000	57.5	33.72	22.97	10.00	977.50	1044.19
24	13.0	5.0	5.0	17.0	2594	4594	2000	57.5	33.72	22.97	10.00	977.50	1044.19
25	13.0	5.0	5.0	17.0	2594	4594	2000	57.5	33.72	22.97	10.00	977.50	1044.19
26	13.0	5.0	5.0	17.0	2594	4594	2000	57.5	33.72	22.97	10.00	977.50	1044.19
27	13.0	5.0	5.0	17.0	2594	4594	2000	57.5	33.72	22.97	10.00	977.50	1044.19
28	13.0	5.0	5.0	17.0	2594	4594	2000	57.5	33.72	22.97	10.00	977.50	1044.19
29	13.0	5.0	5.0	17.0	2594	4594	2000	57.5	33.72	22.97	10.00	977.50	1044.19
30	13.0	5.0	5.0	17.0	2594	4594	2000	57.5	33.72	22.97	10.00	977.50	1044.19

SOURCE : AREA, TABLE 9.4
YIELD, TABLE 9.5

BEST AVAILABLE DOCUMENT

TABLE 9.9.6

ACCELERATED GROWTH IN AGRICULTURE :

PROJECTION OF AREA, YIELD AND PRODUCTION OF MAJOR CROPS, WITH CANAL ROAD PROJECT, JAMRAO & MITHRAO SYSTEM

YEARS	A R E A, 000 ha.				YIELD, Kg/ha.				PRODUCTION, 000 tonnes				
	WHEAT	RICE	SEED COTTON	SUGAR CANE	WHEAT	RICE PADDY	SEED COTTON	SUGAR CANE t/ha	WHEAT	RICE PADDY	SEED COTTON	SUGAR CANE	TOTAL
Base year 0	23.5	0.8	18.3	1.7	2277	2100	1203	40.5	53.51	1.68	22.01	68.85	146.05
1	23.6	0.8	18.2	1.7	2288	2145	1218	40.6	53.94	1.74	22.15	69.67	147.50
2	23.7	0.8	18.1	1.7	2305	2196	1236	40.9	54.52	1.80	22.34	70.68	149.33
3	23.7	0.8	18.0	1.7	2338	2265	1263	41.4	55.48	1.88	22.68	72.18	152.22
4	23.8	0.8	17.8	1.8	2393	2357	1303	42.3	56.96	1.98	23.24	74.36	156.55
5	23.9	0.9	17.7	1.8	2468	2470	1354	43.5	58.93	2.10	24.00	77.20	162.22
6	24.0	0.9	17.6	1.8	2543	2583	1405	44.7	60.90	2.22	24.74	80.07	167.93
7	24.0	0.9	17.5	1.8	2594	2670	1442	45.6	62.32	2.32	25.23	82.22	172.09
8	24.1	0.9	17.4	1.8	2645	2758	1479	46.4	63.74	2.43	25.71	84.39	176.28
9	24.2	0.9	17.3	1.8	2696	2845	1517	47.2	65.17	2.53	26.19	86.60	180.49
10	24.3	0.9	17.2	1.9	2747	2933	1554	48.0	66.61	2.64	26.65	88.82	184.73
11	24.3	0.9	17.0	1.9	2785	3014	1586	48.6	67.74	2.74	27.02	90.61	188.11
12	24.4	0.9	16.9	1.9	2822	3096	1618	49.2	68.87	2.85	27.38	92.42	191.52
13	24.5	0.9	16.8	1.9	2860	3178	1650	49.7	70.00	2.96	27.74	94.25	194.94
14	24.6	0.9	16.7	1.9	2898	3260	1683	50.3	71.15	3.06	28.08	96.09	198.38
15	24.6	1.0	16.6	1.9	2936	3341	1715	50.9	72.30	3.17	28.42	97.95	201.84
16	24.7	1.0	16.5	1.9	2974	3423	1747	51.5	73.45	3.29	28.75	99.82	205.31
17	24.8	1.0	16.3	2.0	3012	3505	1779	52.0	74.61	3.40	29.07	101.72	208.80
18	24.9	1.0	16.2	2.0	3049	3587	1811	52.6	75.78	3.51	29.39	103.63	212.31
19	24.9	1.0	16.1	2.0	3087	3668	1843	53.2	76.95	3.63	29.70	105.55	215.83
20	25.0	1.0	16.0	2.0	3125	3750	1875	53.7	78.13	3.75	30.00	107.50	219.38
21	25.0	1.0	16.0	2.0	3125	3750	1875	53.7	78.13	3.75	30.00	107.50	219.38
22	25.0	1.0	16.0	2.0	3125	3750	1875	53.7	78.13	3.75	30.00	107.50	219.38
23	25.0	1.0	16.0	2.0	3125	3750	1875	53.7	78.13	3.75	30.00	107.50	219.38
24	25.0	1.0	16.0	2.0	3125	3750	1875	53.7	78.13	3.75	30.00	107.50	219.38
25	25.0	1.0	16.0	2.0	3125	3750	1875	53.7	78.13	3.75	30.00	107.50	219.38
26	25.0	1.0	16.0	2.0	3125	3750	1875	53.7	78.13	3.75	30.00	107.50	219.38
27	25.0	1.0	16.0	2.0	3125	3750	1875	53.7	78.13	3.75	30.00	107.50	219.38
28	25.0	1.0	16.0	2.0	3125	3750	1875	53.7	78.13	3.75	30.00	107.50	219.38
29	25.0	1.0	16.0	2.0	3125	3750	1875	53.7	78.13	3.75	30.00	107.50	219.38
30	25.0	1.0	16.0	2.0	3125	3750	1875	53.7	78.13	3.75	30.00	107.50	219.38

SOURCE : AREA, TABLE 9.4
YIELD, TABLE 9.5

BEST AVAILABLE DOCUMENT

TABLE 9.9.7

ACCELERATED GROWTH IN AGRICULTURE :

PROJECTION OF AREA, YIELD AND PRODUCTION OF MAJOR CROPS, WITH CANAL ROAD PROJECT, GOTKI SYSTEM

YEARS	AREA, 000 ha.				YIELD, Kg/ha.				PRODUCTION, 000 tonnes				
	WHEAT	RICE	SEED COTTON	SUGAR CANE	WHEAT	RICE PADDY	SEED COTTON	SUGAR CANE t/ha	WHEAT	RICE PADDY	SEED COTTON	SUGAR CANE	TOTAL
Base year 0	72.7	2.3	49.0	12.1	2503	1250	1317	41.5	181.97	2.88	64.53	502.15	751.53
1	72.8	2.2	49.0	12.1	2520	1300	1331	41.6	183.39	2.91	65.23	502.85	754.37
2	72.8	2.2	49.0	12.1	2542	1354	1348	41.7	185.15	2.94	66.04	504.37	758.50
3	72.9	2.1	49.0	12.1	2576	1417	1371	42.0	187.78	2.98	67.19	508.08	766.03
4	73.0	2.0	49.0	12.1	2626	1493	1404	42.6	191.62	3.04	68.79	514.79	778.25
5	73.0	2.0	49.0	12.1	2692	1581	1445	43.4	196.57	3.12	70.81	524.22	794.72
6	73.1	1.9	49.0	12.1	2757	1668	1486	44.2	201.52	3.19	72.82	533.65	811.18
7	73.2	1.8	49.0	12.1	2804	1742	1517	44.7	205.16	3.21	74.34	539.80	822.51
8	73.2	1.8	49.0	12.1	2852	1816	1548	45.3	208.81	3.23	75.86	545.94	833.83
9	73.3	1.7	49.0	12.1	2899	1889	1579	45.8	212.46	3.24	77.38	552.07	845.15
10	73.4	1.7	49.0	12.1	2947	1963	1610	46.3	216.13	3.24	78.89	558.20	856.46
11	73.4	1.6	49.0	12.0	2994	2037	1641	46.9	219.79	3.23	80.41	564.32	867.76
12	73.5	1.5	49.0	12.0	3041	2111	1672	47.4	223.47	3.21	81.93	570.44	879.05
13	73.5	1.5	49.0	12.0	3089	2184	1703	47.9	227.15	3.18	83.45	576.56	890.33
14	73.6	1.4	49.0	12.0	3136	2258	1734	48.4	230.83	3.14	84.97	582.66	901.60
15	73.7	1.3	49.0	12.0	3183	2332	1765	49.0	234.53	3.09	86.49	588.77	912.87
16	73.7	1.3	49.0	12.0	3231	2405	1796	49.5	238.22	3.03	88.01	594.86	924.12
17	73.8	1.2	49.0	12.0	3278	2479	1827	50.0	241.93	2.96	89.52	600.96	935.37
18	73.9	1.1	49.0	12.0	3325	2553	1858	50.5	245.64	2.88	91.04	607.04	946.61
19	73.9	1.1	49.0	12.0	3373	2626	1889	51.1	249.36	2.80	92.56	613.12	957.84
20	74.0	1.0	49.0	12.0	3420	2700	1920	51.6	253.08	2.70	94.08	619.20	969.06
21	74.0	1.0	49.0	12.0	3420	2700	1920	51.6	253.08	2.70	94.08	619.20	969.06
22	74.0	1.0	49.0	12.0	3420	2700	1920	51.6	253.08	2.70	94.08	619.20	969.06
23	74.0	1.0	49.0	12.0	3420	2700	1920	51.6	253.08	2.70	94.08	619.20	969.06
24	74.0	1.0	49.0	12.0	3420	2700	1920	51.6	253.08	2.70	94.08	619.20	969.06
25	74.0	1.0	49.0	12.0	3420	2700	1920	51.6	253.08	2.70	94.08	619.20	969.06
26	74.0	1.0	49.0	12.0	3420	2700	1920	51.6	253.08	2.70	94.08	619.20	969.06
27	74.0	1.0	49.0	12.0	3420	2700	1920	51.6	253.08	2.70	94.08	619.20	969.06
28	74.0	1.0	49.0	12.0	3420	2700	1920	51.6	253.08	2.70	94.08	619.20	969.06
29	74.0	1.0	49.0	12.0	3420	2700	1920	51.6	253.08	2.70	94.08	619.20	969.06
30	74.0	1.0	49.0	12.0	3420	2700	1920	51.6	253.08	2.70	94.08	619.20	969.06

SOURCE : AREA, TABLE 9.4
YIELD, TABLE 9.5

BEST AVAILABLE DOCUMENT

530

TABLE 9.9.B

ACCELERATED GROWTH IN AGRICULTURE :

PROJECTION OF AREA, YIELD AND PRODUCTION OF MAJOR CROPS, WITH CANAL ROAD PROJECT, ROHRI SYSTEM

YEARS	AREA, 000 ha.				YIELD, Kg/ha.				PRODUCTION, 000 tonnes				
	WHEAT	RICE	SEED COTTON	SUGAR CANE	WHEAT	RICE PADDY	SEED COTTON	SUGAR CANE t/ha	WHEAT	RICE PADDY	SEED COTTON	SUGAR CANE	TOTAL
Base year 0	21.7	1.2	15.9	1.9	1943	2750	1193	37.4	42.16	3.30	18.97	71.06	135.49
1	21.8	1.2	15.9	1.9	1971	2793	1208	37.5	42.91	3.32	19.16	71.31	136.69
2	21.8	1.2	15.8	1.9	2003	2841	1226	37.7	43.74	3.35	19.38	71.67	138.15
3	21.9	1.2	15.8	1.9	2045	2904	1250	38.1	44.81	3.40	19.71	72.36	140.27
4	22.0	1.2	15.7	1.9	2102	2988	1283	38.7	46.20	3.47	20.17	73.49	143.32
5	22.1	1.2	15.7	1.9	2172	3091	1323	39.5	47.89	3.56	20.74	75.01	147.20
6	22.1	1.1	15.6	1.9	2242	3194	1364	40.3	49.59	3.64	21.32	76.54	151.09
7	22.2	1.1	15.6	1.9	2296	3275	1395	40.8	50.94	3.70	21.74	77.59	153.98
8	22.3	1.1	15.5	1.9	2350	3355	1426	41.4	52.31	3.76	22.17	78.64	156.87
9	22.3	1.1	15.5	1.9	2404	3436	1457	41.9	53.69	3.81	22.58	79.68	159.77
10	22.4	1.1	15.5	1.9	2458	3516	1489	42.5	55.07	3.87	23.00	80.73	162.66
11	22.5	1.1	15.4	1.9	2513	3596	1520	43.0	56.46	3.92	23.41	81.78	165.56
12	22.5	1.1	15.4	1.9	2567	3677	1551	43.6	57.85	3.97	23.82	82.82	168.47
13	22.6	1.1	15.3	1.9	2621	3757	1582	44.1	59.26	4.02	24.23	83.87	171.38
14	22.7	1.1	15.3	1.9	2675	3838	1613	44.7	60.67	4.07	24.63	84.92	174.29
15	22.8	1.1	15.2	1.9	2729	3918	1644	45.2	62.09	4.11	25.03	85.97	177.20
16	22.8	1.0	15.2	1.9	2783	3998	1675	45.8	63.52	4.16	25.43	87.01	180.12
17	22.9	1.0	15.1	1.9	2838	4079	1707	46.3	64.95	4.20	25.83	88.06	183.04
18	23.0	1.0	15.1	1.9	2892	4159	1738	46.9	66.39	4.24	26.22	89.11	185.96
19	23.0	1.0	15.0	1.9	2946	4240	1769	47.4	67.84	4.28	26.61	90.15	188.89
20	23.1	1.0	15.0	1.9	3000	4320	1800	48.0	69.30	4.32	27.00	91.20	191.82
21	23.1	1.0	15.0	1.9	3000	4320	1800	48.0	69.30	4.32	27.00	91.20	191.82
22	23.1	1.0	15.0	1.9	3000	4320	1800	48.0	69.30	4.32	27.00	91.20	191.82
23	23.1	1.0	15.0	1.9	3000	4320	1800	48.0	69.30	4.32	27.00	91.20	191.82
24	23.1	1.0	15.0	1.9	3000	4320	1800	48.0	69.30	4.32	27.00	91.20	191.82
25	23.1	1.0	15.0	1.9	3000	4320	1800	48.0	69.30	4.32	27.00	91.20	191.82
26	23.1	1.0	15.0	1.9	3000	4320	1800	48.0	69.30	4.32	27.00	91.20	191.82
27	23.1	1.0	15.0	1.9	3000	4320	1800	48.0	69.30	4.32	27.00	91.20	191.82
28	23.1	1.0	15.0	1.9	3000	4320	1800	48.0	69.30	4.32	27.00	91.20	191.82
29	23.1	1.0	15.0	1.9	3000	4320	1800	48.0	69.30	4.32	27.00	91.20	191.82
30	23.1	1.0	15.0	1.9	3000	4320	1800	48.0	69.30	4.32	27.00	91.20	191.82

SOURCE : AREA, TABLE 9.4
YIELD, TABLE 9.5

BEST AVAILABLE DOCUMENT

TABLE 9.9.9

ACCELERATED GROWTH IN AGRICULTURE :

PROJECTION OF AREA, YIELD AND PRODUCTION OF MAJOR CROPS, WITH CANAL ROAD PROJECT, DADU SYSTEM

YEARS	AREA, 000 ha.				YIELD, Kg/ha.				PRODUCTION, 000 tonnes				
	WHEAT	RICE	SEED COTTON	SUGAR CANE	WHEAT	RICE PADDY	SEED COTTON	SUGAR CANE t/ha	WHEAT	RICE PADDY	SEED COTTON	SUGAR CANE	TOTAL
Base year 0	8.6	6.5	0.8	0.6	1408	4000	923	37.6	12.11	26.00	0.74	22.56	61.41
1	8.5	6.6	0.8	0.6	1418	4040	934	37.8	12.08	26.56	0.76	23.42	62.82
2	8.4	6.7	0.8	0.6	1430	4088	948	38.0	12.07	27.18	0.78	24.32	64.35
3	8.4	6.7	0.8	0.7	1449	4155	966	38.4	12.11	27.94	0.80	25.35	66.21
4	8.3	6.8	0.8	0.7	1477	4251	990	39.1	12.23	28.91	0.83	26.56	68.52
5	8.2	6.9	0.9	0.7	1513	4372	1021	39.9	12.41	30.06	0.87	27.94	71.27
6	8.1	7.0	0.9	0.7	1550	4493	1052	40.8	12.58	31.22	0.90	29.36	74.07
7	8.0	7.0	0.9	0.7	1576	4583	1075	41.4	12.67	32.20	0.94	30.62	76.43
8	8.0	7.1	0.9	0.8	1603	4674	1099	42.0	12.76	33.18	0.97	31.91	78.81
9	7.9	7.2	0.9	0.8	1629	4764	1122	42.6	12.84	34.18	1.00	33.21	81.23
10	7.8	7.3	0.9	0.8	1656	4855	1145	43.2	12.91	35.20	1.03	34.55	83.69
11	7.7	7.3	0.9	0.8	1682	4945	1169	43.8	12.99	36.22	1.06	35.90	86.18
12	7.6	7.4	0.9	0.8	1708	5036	1192	44.4	13.05	37.26	1.10	37.29	88.70
13	7.6	7.5	0.9	0.9	1735	5126	1216	45.0	13.12	38.32	1.13	38.69	91.26
14	7.5	7.6	0.9	0.9	1761	5217	1239	45.6	13.17	39.39	1.16	40.12	93.85
15	7.4	7.6	1.0	0.9	1788	5307	1263	46.2	13.23	40.47	1.20	41.57	96.47
16	7.3	7.7	1.0	0.9	1814	5398	1286	46.8	13.28	41.56	1.23	43.05	99.13
17	7.2	7.8	1.0	0.9	1841	5488	1310	47.4	13.33	42.67	1.27	44.55	101.82
18	7.2	7.9	1.0	1.0	1867	5579	1333	48.0	13.37	43.79	1.31	46.08	104.55
19	7.1	7.9	1.0	1.0	1894	5669	1357	48.6	13.41	44.93	1.34	47.63	107.31
20	7.0	8.0	1.0	1.0	1920	5760	1380	49.2	13.44	46.08	1.38	49.20	110.10
21	7.0	8.0	1.0	1.0	1920	5760	1380	49.2	13.44	46.08	1.38	49.20	110.10
22	7.0	8.0	1.0	1.0	1920	5760	1380	49.2	13.44	46.08	1.38	49.20	110.10
23	7.0	8.0	1.0	1.0	1920	5760	1380	49.2	13.44	46.08	1.38	49.20	110.10
24	7.0	8.0	1.0	1.0	1920	5760	1380	49.2	13.44	46.08	1.38	49.20	110.10
25	7.0	8.0	1.0	1.0	1920	5760	1380	49.2	13.44	46.08	1.38	49.20	110.10
26	7.0	8.0	1.0	1.0	1920	5760	1380	49.2	13.44	46.08	1.38	49.20	110.10
27	7.0	8.0	1.0	1.0	1920	5760	1380	49.2	13.44	46.08	1.38	49.20	110.10
28	7.0	8.0	1.0	1.0	1920	5760	1380	49.2	13.44	46.08	1.38	49.20	110.10
29	7.0	8.0	1.0	1.0	1920	5760	1380	49.2	13.44	46.08	1.38	49.20	110.10
30	7.0	8.0	1.0	1.0	1920	5760	1380	49.2	13.44	46.08	1.38	49.20	110.10

SOURCE : AREA, TABLE 9.4
YIELD, TABLE 9.5

BEST AVAILABLE DOCUMENT

532

TABLE 9.9.10

ACCELERATED GROWTH IN AGRICULTURE :

PROJECTION OF AREA, YIELD AND PRODUCTION OF MAJOR CROPS, WITH CANAL ROAD PROJECT, KABUL SYSTEM

YEARS	A R E A, 000 ha.				YIELD, Kg/ha.				PRODUCTION, 000 tonnes				
	WHEAT	RICE	MAIZE	SUGAR CANE	WHEAT	RICE PADDY	MAIZE	SUGAR CANE t/ha	WHEAT	RICE PADDY	MAIZE	SUGAR CANE	TOTAL
Base year 0	19.2	0.0	9.6	11.5	1875	0	1756	41.1	36.00	0.00	16.86	472.65	525.51
1	19.2	0.0	9.6	11.5	1896	0	1768	41.1	36.39	0.00	17.01	472.14	525.54
2	19.2	0.0	9.6	11.5	1921	0	1784	41.3	36.85	0.00	17.19	472.38	526.43
3	19.2	0.0	9.7	11.4	1956	0	1807	41.5	37.49	0.00	17.46	474.65	529.60
4	19.2	0.0	9.7	11.4	2004	0	1843	42.1	38.39	0.00	17.84	479.66	535.89
5	19.2	0.0	9.7	11.4	2064	0	1889	42.8	39.52	0.00	18.32	487.17	545.01
6	19.1	0.0	9.7	11.4	2124	0	1934	43.6	40.64	0.00	18.80	494.64	554.09
7	19.1	0.0	9.7	11.3	2169	0	1968	44.1	41.49	0.00	19.17	499.07	559.72
8	19.1	0.0	9.8	11.3	2214	0	2001	44.6	42.34	0.00	19.53	503.47	565.34
9	19.1	0.0	9.8	11.3	2260	0	2034	45.0	43.19	0.00	19.89	507.85	570.93
10	19.1	0.0	9.8	11.3	2305	0	2067	45.5	44.03	0.00	20.26	512.20	576.49
11	19.1	0.0	9.8	11.2	2351	0	2101	46.0	44.88	0.00	20.63	516.53	582.04
12	19.1	0.0	9.8	11.2	2396	0	2134	46.5	45.72	0.00	21.00	520.84	587.56
13	19.1	0.0	9.9	11.2	2442	0	2167	47.0	46.56	0.00	21.37	525.12	593.05
14	19.1	0.0	9.9	11.2	2487	0	2200	47.5	47.41	0.00	21.74	529.37	598.52
15	19.1	0.0	9.9	11.1	2533	0	2234	48.0	48.25	0.00	22.11	533.60	603.97
16	19.0	0.0	9.9	11.1	2578	0	2267	48.5	49.09	0.00	22.49	537.91	609.39
17	19.0	0.0	9.9	11.1	2624	0	2300	48.9	49.93	0.00	22.86	542.00	614.79
18	19.0	0.0	10.0	11.1	2669	0	2333	49.4	50.77	0.00	23.24	546.15	620.16
19	19.0	0.0	10.0	11.0	2715	0	2367	49.9	51.60	0.00	23.62	550.29	625.51
20	19.0	0.0	10.0	11.0	2760	0	2400	50.4	52.44	0.00	24.00	554.40	630.84
21	19.0	0.0	10.0	11.0	2760	0	2400	50.4	52.44	0.00	24.00	554.40	630.84
22	19.0	0.0	10.0	11.0	2760	0	2400	50.4	52.44	0.00	24.00	554.40	630.84
23	19.0	0.0	10.0	11.0	2760	0	2400	50.4	52.44	0.00	24.00	554.40	630.84
24	19.0	0.0	10.0	11.0	2760	0	2400	50.4	52.44	0.00	24.00	554.40	630.84
25	19.0	0.0	10.0	11.0	2760	0	2400	50.4	52.44	0.00	24.00	554.40	630.84
26	19.0	0.0	10.0	11.0	2760	0	2400	50.4	52.44	0.00	24.00	554.40	630.84
27	19.0	0.0	10.0	11.0	2760	0	2400	50.4	52.44	0.00	24.00	554.40	630.84
28	19.0	0.0	10.0	11.0	2760	0	2400	50.4	52.44	0.00	24.00	554.40	630.84
29	19.0	0.0	10.0	11.0	2760	0	2400	50.4	52.44	0.00	24.00	554.40	630.84
30	19.0	0.0	10.0	11.0	2760	0	2400	50.4	52.44	0.00	24.00	554.40	630.84

SOURCE : AREA, TABLE 9.4
YIELD, TABLE 9.5

BEST AVAILABLE DOCUMENT

TABLE 9.9.11

ACCELERATED GROWTH IN AGRICULTURE :

PROJECTION OF AREA, YIELD AND PRODUCTION OF MAJOR CROPS, WITH CANAL ROAD PROJECT, PAHARPUR SYSTEM

YEARS	A R E A, 000 ha.				YIELD, Kg/ha.				PRODUCTION, 000 tonnes				
	WHEAT	RICE	MAIZE	SUGAR CANE	WHEAT	RICE PADDY	MAIZE	SUGAR CANE t/ha	WHEAT	RICE PADDY	MAIZE	SUGAR CANE	TOTAL
ase year 0	10.5	0.0	0.2	0.4	1262	0	1333	26.7	13.25	0.00	0.27	10.68	24.20
1	10.4	0.0	0.2	0.4	1276	0	1356	27.1	13.31	0.00	0.33	11.66	25.29
2	10.4	0.0	0.3	0.5	1297	0	1386	27.7	13.42	0.00	0.39	12.72	26.53
3	10.3	0.0	0.3	0.5	1333	0	1434	28.5	13.69	0.00	0.46	13.99	28.14
4	10.2	0.0	0.4	0.5	1390	0	1505	29.9	14.18	0.00	0.54	15.55	30.27
5	10.1	0.0	0.4	0.6	1467	0	1598	31.7	14.85	0.00	0.64	17.43	32.92
6	10.1	0.0	0.4	0.6	1544	0	1691	33.5	15.51	0.00	0.74	19.42	35.67
7	10.0	0.0	0.5	0.6	1597	0	1758	34.7	15.93	0.00	0.84	21.20	37.97
8	9.9	0.0	0.5	0.6	1651	0	1824	36.0	16.34	0.00	0.95	23.05	40.34
9	9.8	0.0	0.6	0.7	1704	0	1891	37.3	16.74	0.00	1.06	24.98	42.79
10	9.8	0.0	0.6	0.7	1758	0	1958	38.6	17.14	0.00	1.17	26.99	45.30
11	9.7	0.0	0.6	0.7	1791	0	2005	39.4	17.33	0.00	1.28	28.78	47.40
12	9.6	0.0	0.7	0.8	1825	0	2053	40.3	17.52	0.00	1.40	30.63	49.54
13	9.5	0.0	0.7	0.8	1858	0	2100	41.2	17.70	0.00	1.51	32.52	51.73
14	9.5	0.0	0.8	0.8	1892	0	2147	42.0	17.87	0.00	1.63	34.47	53.98
15	9.4	0.0	0.8	0.9	1925	0	2194	42.9	18.05	0.00	1.76	36.47	56.27
16	9.3	0.0	0.8	0.9	1959	0	2241	43.8	18.21	0.00	1.88	38.52	58.62
17	9.2	0.0	0.9	0.9	1992	0	2288	44.6	18.38	0.00	2.01	40.63	61.02
18	9.2	0.0	0.9	0.9	2026	0	2336	45.5	18.53	0.00	2.15	42.78	63.46
19	9.1	0.0	1.0	1.0	2059	0	2383	46.4	18.69	0.00	2.29	44.99	65.96
20	9.0	0.0	1.0	1.0	2093	0	2430	47.2	18.83	0.00	2.43	47.25	68.51
21	9.0	0.0	1.0	1.0	2093	0	2430	47.2	18.83	0.00	2.43	47.25	68.51
22	9.0	0.0	1.0	1.0	2093	0	2430	47.2	18.83	0.00	2.43	47.25	68.51
23	9.0	0.0	1.0	1.0	2093	0	2430	47.2	18.83	0.00	2.43	47.25	68.51
24	9.0	0.0	1.0	1.0	2093	0	2430	47.2	18.83	0.00	2.43	47.25	68.51
25	9.0	0.0	1.0	1.0	2093	0	2430	47.2	18.83	0.00	2.43	47.25	68.51
26	9.0	0.0	1.0	1.0	2093	0	2430	47.2	18.83	0.00	2.43	47.25	68.51
27	9.0	0.0	1.0	1.0	2093	0	2430	47.2	18.83	0.00	2.43	47.25	68.51
28	9.0	0.0	1.0	1.0	2093	0	2430	47.2	18.83	0.00	2.43	47.25	68.51
29	9.0	0.0	1.0	1.0	2093	0	2430	47.2	18.83	0.00	2.43	47.25	68.51
30	9.0	0.0	1.0	1.0	2093	0	2430	47.2	18.83	0.00	2.43	47.25	68.51

IRCE : AREA, TABLE 9.4
YIELD, TABLE 9.5

BEST AVAILABLE DOCUMENT

534

TABLE 9.9.12

ACCELERATED GROWTH IN AGRICULTURE :

PROJECTION OF AREA, YIELD AND PRODUCTION OF MAJOR CROPS, WITH CANAL ROAD PROJECT, MARWAT SYSTEM

YEARS	A R E A, 000 ha.				YIELD, Kg/ha.				PRODUCTION, 000 tonnes				
	WHEAT	RICE	MAIZE	SUGAR CANE	WHEAT	RICE PADDY	MAIZE	SUGAR CANE t/ha	WHEAT	RICE PADDY	MAIZE	SUGAR CANE	TOTAL
Base year 0	100.5	0.0	16.7	2.2	960	0	1732	25.2	96.48	0.00	28.92	55.44	180.84
1	100.4	0.0	16.6	2.3	987	0	1735	25.4	99.12	0.00	28.83	59.53	187.48
2	100.4	0.0	16.5	2.5	1019	0	1746	25.8	102.27	0.00	28.86	63.97	195.10
3	100.3	0.0	16.4	2.6	1065	0	1777	26.5	106.78	0.00	29.22	69.32	205.32
4	100.2	0.0	16.4	2.8	1130	0	1834	27.5	113.18	0.00	30.00	76.01	219.19
5	100.1	0.0	16.3	2.9	1211	0	1916	29.0	121.27	0.00	31.18	84.12	236.57
6	100.1	0.0	16.2	3.0	1293	0	1998	30.5	129.35	0.00	32.34	92.64	254.33
7	100.0	0.0	16.1	3.2	1354	0	2050	31.5	135.37	0.00	33.02	100.11	268.49
8	99.9	0.0	16.0	3.3	1415	0	2103	32.5	141.38	0.00	33.68	107.86	282.91
9	99.8	0.0	15.9	3.5	1476	0	2155	33.5	147.37	0.00	34.34	115.89	297.60
10	99.8	0.0	15.9	3.6	1538	0	2208	34.5	153.37	0.00	34.99	124.20	312.55
11	99.7	0.0	15.8	3.7	1579	0	2221	35.0	157.36	0.00	35.01	130.71	323.09
12	99.6	0.0	15.7	3.9	1620	0	2234	35.4	161.35	0.00	35.03	137.35	333.73
13	99.5	0.0	15.6	4.0	1661	0	2247	35.9	165.34	0.00	35.05	144.12	344.50
14	99.5	0.0	15.5	4.2	1703	0	2261	36.3	169.31	0.00	35.06	151.01	355.38
15	99.4	0.0	15.4	4.3	1744	0	2274	36.8	173.29	0.00	35.07	158.03	366.38
16	99.3	0.0	15.3	4.4	1785	0	2287	37.2	177.25	0.00	35.08	165.17	377.50
17	99.2	0.0	15.3	4.6	1826	0	2300	37.7	181.21	0.00	35.09	172.44	388.74
18	99.2	0.0	15.2	4.7	1868	0	2314	38.1	185.16	0.00	35.10	179.83	400.09
19	99.1	0.0	15.1	4.9	1909	0	2327	38.6	189.11	0.00	35.10	187.35	411.56
20	99.0	0.0	15.0	5.0	1950	0	2340	39.0	193.05	0.00	35.10	195.00	423.15
21	99.0	0.0	15.0	5.0	1950	0	2340	39.0	193.05	0.00	35.10	195.00	423.15
22	99.0	0.0	15.0	5.0	1950	0	2340	39.0	193.05	0.00	35.10	195.00	423.15
23	99.0	0.0	15.0	5.0	1950	0	2340	39.0	193.05	0.00	35.10	195.00	423.15
24	99.0	0.0	15.0	5.0	1950	0	2340	39.0	193.05	0.00	35.10	195.00	423.15
25	99.0	0.0	15.0	5.0	1950	0	2340	39.0	193.05	0.00	35.10	195.00	423.15
26	99.0	0.0	15.0	5.0	1950	0	2340	39.0	193.05	0.00	35.10	195.00	423.15
27	99.0	0.0	15.0	5.0	1950	0	2340	39.0	193.05	0.00	35.10	195.00	423.15
28	99.0	0.0	15.0	5.0	1950	0	2340	39.0	193.05	0.00	35.10	195.00	423.15
29	99.0	0.0	15.0	5.0	1950	0	2340	39.0	193.05	0.00	35.10	195.00	423.15
30	99.0	0.0	15.0	5.0	1950	0	2340	39.0	193.05	0.00	35.10	195.00	423.15

OURCE : AREA, TABLE 9.4
YIELD, TABLE 9.5

BEST AVAILABLE DOCUMENT

535

TABLE 9.9.13

ACCELERATED GROWTH IN AGRICULTURE :

PROJECTION OF AREA, YIELD AND PRODUCTION OF MAJOR CROPS, WITH CANAL ROAD PROJECT, UPPER SWAT SYSTEM

YEARS	A R E A, 000 ha.				YIELD, Kg/ha.				PRODUCTION, 000 tonnes				
	WHEAT	RICE	MAIZE	SUGAR CANE	WHEAT	RICE PADDY	MAIZE	SUGAR CANE t/ha	WHEAT	RICE PADDY	MAIZE	SUGAR CANE	TOTAL
Base year 0	130.4	97.0	92.2	36.2	1073	1595	1750	30.5	139.92	154.72	161.35	1104.10	1560.08
1	129.5	97.0	92.8	36.5	1144	1610	1788	31.1	148.22	156.17	165.81	1135.33	1605.52
2	128.6	97.0	93.3	36.9	1220	1629	1829	31.7	156.91	157.92	170.68	1169.38	1654.88
3	127.8	97.0	93.9	37.2	1305	1655	1881	32.5	166.80	160.44	176.58	1210.45	1714.26
4	126.9	96.9	94.4	37.5	1406	1692	1947	33.6	178.39	164.02	183.91	1261.19	1787.50
5	126.0	96.9	95.0	37.9	1519	1739	2027	34.9	191.45	168.58	192.56	1321.01	1873.60
6	125.1	96.9	95.6	38.2	1633	1787	2107	36.2	204.32	173.13	201.30	1381.69	1960.45
7	124.3	96.9	96.1	38.5	1730	1822	2170	37.2	215.03	176.52	208.62	1433.01	2033.18
8	123.4	96.9	96.7	38.9	1828	1857	2234	38.2	225.56	179.91	216.00	1485.01	2106.48
9	122.5	96.9	97.2	39.2	1926	1892	2298	39.2	235.93	183.29	223.46	1537.69	2180.37
10	121.6	96.9	97.8	39.6	2023	1928	2362	40.2	246.12	186.68	230.99	1591.05	2254.84
11	120.8	96.8	98.4	39.9	2121	1963	2426	41.2	256.14	190.06	238.59	1645.10	2329.89
12	119.9	96.8	98.9	40.2	2219	1998	2489	42.3	265.99	193.45	246.26	1699.82	2405.52
13	119.0	96.8	99.5	40.6	2316	2033	2553	43.3	275.67	196.83	254.00	1755.23	2481.73
14	118.1	96.8	100.0	40.9	2414	2069	2617	44.3	285.18	200.21	261.82	1811.32	2558.53
15	117.3	96.8	100.6	41.2	2512	2104	2681	45.3	294.52	203.59	269.70	1868.09	2635.90
16	116.4	96.8	101.2	41.6	2609	2139	2745	46.3	303.69	206.97	277.66	1925.54	2713.85
17	115.5	96.7	101.7	41.9	2707	2174	2809	47.3	312.68	210.35	285.69	1983.67	2792.39
18	114.6	96.7	102.3	42.2	2805	2210	2872	48.4	321.50	213.72	293.79	2042.49	2871.50
19	113.8	96.7	102.8	42.6	2902	2245	2936	49.4	330.16	217.10	301.96	2101.98	2951.20
20	112.9	96.7	103.4	42.9	3000	2280	3000	50.4	338.64	220.48	310.20	2162.16	3031.48
21	112.9	96.7	103.4	42.9	3000	2280	3000	50.4	338.64	220.48	310.20	2162.16	3031.48
22	112.9	96.7	103.4	42.9	3000	2280	3000	50.4	338.64	220.48	310.20	2162.16	3031.48
23	112.9	96.7	103.4	42.9	3000	2280	3000	50.4	338.64	220.48	310.20	2162.16	3031.48
24	112.9	96.7	103.4	42.9	3000	2280	3000	50.4	338.64	220.48	310.20	2162.16	3031.48
25	112.9	96.7	103.4	42.9	3000	2280	3000	50.4	338.64	220.48	310.20	2162.16	3031.48
26	112.9	96.7	103.4	42.9	3000	2280	3000	50.4	338.64	220.48	310.20	2162.16	3031.48
27	112.9	96.7	103.4	42.9	3000	2280	3000	50.4	338.64	220.48	310.20	2162.16	3031.48
28	112.9	96.7	103.4	42.9	3000	2280	3000	50.4	338.64	220.48	310.20	2162.16	3031.48
29	112.9	96.7	103.4	42.9	3000	2280	3000	50.4	338.64	220.48	310.20	2162.16	3031.48
30	112.9	96.7	103.4	42.9	3000	2280	3000	50.4	338.64	220.48	310.20	2162.16	3031.48

SOURCE : AREA, TABLE 9.4
YIELD, TABLE 9.5

BEST AVAILABLE DOCUMENT

TABLE 9.10.1

AMOUNT AND VALUE OF INCREASES IN PRODUCTION OF MAJOR CROPS,

JHANG SYSTEM

(Value at Economic Prices)

YEARS	INCREASE IN PRODUCTION (000 t)				VALUE OF INCREASE (Rs.million)					PROJECT BENEFIT @ 20 % Million Rupees
	WHEAT	RICE	SEED COTTON	SUGAR CANE	WHEAT @ Rs 1678	RICE @ Rs 2916	COTTON @ Rs 5172	S.CANE @ Rs 189	TOTAL	
Base year 0	0.00	0.00	0.00	0.00	0.00	0.00	0.00	0.00	0.00	0.00
1	0.00	0.00	0.00	0.00	0.00	0.00	0.00	0.00	0.00	0.00
2	1.07	0.12	0.17	2.77	1.79	0.34	0.87	0.52	3.53	0.71
3	5.00	0.53	0.79	12.92	8.38	1.55	4.06	2.44	16.44	3.29
4	12.87	1.34	2.02	33.23	21.60	3.92	10.46	6.28	42.25	8.45
5	24.35	2.49	3.83	62.80	40.86	7.25	19.79	11.87	79.77	15.95
6	35.86	3.59	5.64	92.39	60.18	10.46	29.15	17.46	117.24	23.45
7	43.10	4.21	6.77	110.92	72.33	12.29	35.03	20.96	140.60	28.12
8	50.36	4.81	7.91	129.46	84.51	14.04	40.93	24.47	163.94	32.79
9	57.65	5.38	9.06	148.01	96.74	15.70	46.84	27.97	187.26	37.45
10	64.96	5.93	10.20	166.58	109.00	17.28	52.78	31.48	210.54	42.11
11	71.48	6.43	11.14	180.11	119.94	18.74	57.59	34.04	230.31	46.06
12	78.01	6.90	12.07	193.66	130.91	20.11	62.42	36.60	250.04	50.01
13	84.57	7.34	13.00	207.21	141.91	21.40	67.26	39.16	269.73	53.95
14	91.15	7.75	13.94	220.77	152.95	22.60	72.12	41.73	289.39	57.88
15	97.75	8.13	14.89	234.35	164.02	23.72	76.99	44.29	309.02	61.80
16	104.37	8.49	15.83	247.94	175.13	24.76	81.87	46.86	328.62	65.72
17	111.01	8.82	16.78	261.54	186.27	25.71	86.77	49.43	348.18	69.64
18	117.66	9.12	17.73	275.15	197.44	26.58	91.68	52.00	367.71	73.54
19	124.34	9.38	18.68	288.77	208.65	27.37	96.61	54.58	387.20	77.44
20	131.04	9.62	19.64	302.40	219.89	28.07	101.55	57.15	406.66	81.33
21	131.04	9.62	19.64	302.40	219.89	28.07	101.55	57.15	406.66	81.33
22	131.04	9.62	19.64	302.40	219.89	28.07	101.55	57.15	406.66	81.33
23	131.04	9.62	19.64	302.40	219.89	28.07	101.55	57.15	406.66	81.33
24	131.04	9.62	19.64	302.40	219.89	28.07	101.55	57.15	406.66	81.33
25	131.04	9.62	19.64	302.40	219.89	28.07	101.55	57.15	406.66	81.33
26	131.04	9.62	19.64	302.40	219.89	28.07	101.55	57.15	406.66	81.33
27	131.04	9.62	19.64	302.40	219.89	28.07	101.55	57.15	406.66	81.33
28	131.04	9.62	19.64	302.40	219.89	28.07	101.55	57.15	406.66	81.33
29	131.04	9.62	19.64	302.40	219.89	28.07	101.55	57.15	406.66	81.33
30	131.04	9.62	19.64	302.40	219.89	28.07	101.55	57.15	406.66	81.33

SOURCE : Production , Table 9.9.1
Economic Prices estimated by Consultants.

BEST AVAILABLE DOCUMENT

TABLE 9.10.2

AMOUNT AND VALUE OF INCREASES IN PRODUCTION OF MAJOR CROPS,

GOGERA SYSTEM

(Value at Economic Prices)

YEARS	INCREASE IN PRODUCTION (000 t) WHEAT	RICE	SEED COTTON	SUGAR CANE	VALUE OF INCREASE (Rs.million) WHEAT @ Rs 1678	RICE @ Rs 2916	COTTON @ Rs 5172	S.CANE @ Rs 189	TOTAL	PROJECT BENEFIT @ 20 % Million Rupees
Base year 0	0.00	0.00	0.00	0.00	0.00	0.00	0.00	0.00	0.00	0.00
1	0.00	0.00	0.00	0.00	0.00	0.00	0.00	0.00	0.00	0.00
2	1.37	0.16	0.05	7.94	2.29	0.45	0.24	1.50	4.48	0.90
3	6.41	0.71	0.21	36.82	10.75	2.08	1.08	6.96	20.87	4.17
4	16.56	1.80	0.53	94.12	27.79	5.25	2.73	17.79	53.55	10.71
5	31.44	3.34	0.98	176.72	52.76	9.73	5.05	33.40	100.94	20.19
6	46.48	4.82	1.41	258.32	77.99	14.04	7.29	48.82	148.15	29.63
7	56.07	5.67	1.66	308.10	94.08	16.53	8.58	58.23	177.42	35.48
8	65.75	6.49	1.90	357.27	110.33	18.91	9.81	67.52	206.58	41.32
9	75.53	7.27	2.12	405.81	126.74	21.19	10.99	76.70	235.62	47.12
10	85.41	8.01	2.34	453.72	143.31	23.36	12.11	85.75	264.54	52.91
11	93.99	8.69	2.50	486.80	157.72	25.33	12.91	92.01	287.97	57.59
12	102.66	9.33	2.64	519.44	172.27	27.21	13.67	98.17	311.32	62.26
13	111.42	9.94	2.78	551.62	186.96	28.97	14.38	104.26	334.57	66.91
14	120.25	10.51	2.91	583.36	201.78	30.64	15.05	110.26	357.73	71.55
15	129.17	11.04	3.03	614.66	216.75	32.20	15.67	116.17	380.79	76.16
16	138.17	11.54	3.14	645.50	231.85	33.66	16.25	122.00	403.76	80.75
17	147.25	12.01	3.24	675.90	247.09	35.02	16.78	127.74	426.63	85.33
18	156.42	12.44	3.34	705.85	262.47	36.27	17.27	133.40	449.42	89.88
19	165.67	12.83	3.42	735.35	277.99	37.43	17.71	138.98	472.11	94.42
20	175.00	13.20	3.50	764.40	293.65	38.48	18.10	144.47	494.70	98.94
21	175.00	13.20	3.50	764.40	293.65	38.48	18.10	144.47	494.70	98.94
22	175.00	13.20	3.50	764.40	293.65	38.48	18.10	144.47	494.70	98.94
23	175.00	13.20	3.50	764.40	293.65	38.48	18.10	144.47	494.70	98.94
24	175.00	13.20	3.50	764.40	293.65	38.48	18.10	144.47	494.70	98.94
25	175.00	13.20	3.50	764.40	293.65	38.48	18.10	144.47	494.70	98.94
26	175.00	13.20	3.50	764.40	293.65	38.48	18.10	144.47	494.70	98.94
27	175.00	13.20	3.50	764.40	293.65	38.48	18.10	144.47	494.70	98.94
28	175.00	13.20	3.50	764.40	293.65	38.48	18.10	144.47	494.70	98.94
29	175.00	13.20	3.50	764.40	293.65	38.48	18.10	144.47	494.70	98.94
30	175.00	13.20	3.50	764.40	293.65	38.48	18.10	144.47	494.70	98.94

SOURCE : Production , Table 9.9.2
Economic Prices estimated by Consultants.

BEST AVAILABLE DOCUMENT

538

TABLE 9.10.3

AMOUNT AND VALUE OF INCREASES IN PRODUCTION OF MAJOR CROPS,

DEPALPUR SYSTEM

(Value at Economic Prices)

YEARS	INCREASE IN PRODUCTION				VALUE OF INCREASE (Rs.million)					PROJECT BENEFIT @ 20% Million Rupees
	WHEAT	RICE	SEED COTTON	SUGAR CANE	WHEAT @ Rs 1678	RICE @ Rs 2916	COTTON @ Rs 5172	S.CANE @ Rs 189	TOTAL	
Base year 0	0.00	0.00	0.00	0.00	0.00	0.00	0.00	0.00	0.00	0.00
1	0.00	0.00	0.00	0.00	0.00	0.00	0.00	0.00	0.00	0.00
2	0.70	0.30	0.05	1.75	1.18	0.88	0.24	0.33	2.64	0.53
3	3.30	1.41	0.21	8.14	5.53	4.13	1.10	1.54	12.30	2.46
4	8.52	3.64	0.53	20.91	14.29	10.62	2.74	3.95	31.61	6.32
5	16.17	6.89	0.97	39.45	27.13	20.09	5.01	7.46	59.69	11.94
6	23.89	10.15	1.38	57.97	40.09	29.58	7.12	10.96	87.75	17.55
7	28.81	12.19	1.59	69.50	48.33	35.55	8.24	13.13	105.26	21.05
8	33.77	14.24	1.79	81.01	56.66	41.53	9.27	15.31	122.77	24.55
9	38.77	16.30	1.97	92.49	65.06	47.53	10.19	17.48	140.26	28.05
10	43.82	18.36	2.13	103.96	73.53	53.54	11.01	19.65	157.73	31.55
11	48.65	20.72	2.26	114.71	81.63	60.42	11.69	21.68	175.42	35.08
12	53.51	23.09	2.37	125.45	89.80	67.32	12.27	23.71	193.10	38.62
13	58.42	25.46	2.47	136.16	98.04	74.24	12.76	25.73	210.77	42.15
14	63.38	27.84	2.54	146.85	106.35	81.17	13.15	27.76	228.42	45.68
15	68.37	30.22	2.60	157.53	114.73	88.13	13.44	29.77	246.07	49.21
16	73.41	32.61	2.64	168.18	123.19	95.10	13.63	31.79	263.71	52.74
17	78.50	35.01	2.66	178.82	131.71	102.09	13.73	33.80	281.33	56.27
18	83.62	37.41	2.68	189.43	140.32	109.10	13.73	35.80	298.95	59.79
19	88.79	39.82	2.6[illegible]	200.03	148.99	116.13	13.64	37.80	316.56	63.31
20	94.00	42.24	2.60	210.60	157.73	123.17	13.45	39.80	334.15	66.83
21	94.00	42.24	2.60	210.60	157.73	123.17	13.45	39.80	334.15	66.83
22	94.00	42.24	2.60	210.60	157.73	123.17	13.45	39.80	334.15	66.83
23	94.00	42.24	2.60	210.60	157.73	123.17	13.45	39.80	334.15	66.83
24	94.00	42.24	2.60	210.60	157.73	123.17	13.45	39.80	334.15	66.83
25	94.00	42.24	2.60	210.60	157.73	123.17	13.45	39.80	334.15	66.83
26	94.00	42.24	2.60	210.60	157.73	123.17	13.45	39.80	334.15	66.83
27	94.00	42.24	2.60	210.60	157.73	123.17	13.45	39.80	334.15	66.83
28	94.00	42.24	2.60	210.60	157.73	123.17	13.45	39.80	334.15	66.83
29	94.00	42.24	2.60	210.60	157.73	123.17	13.45	39.80	334.15	66.83
30	94.00	42.24	2.60	210.60	157.73	123.17	13.45	39.80	334.15	66.83

SOURCE : Production , Table 9.9.3
Economic Prices estimated by Consultants.

BEST AVAILABLE DOCUMENT

TABLE 9.10.4

AMOUNT AND VALUE OF INCREASES IN PRODUCTION OF MAJOR CROPS,

MAILSI SYSTEM

(Value at Economic Prices)

YEARS	INCREASE IN PRODUCTION				VALUE OF INCREASE (Rs.million)					PROJECT BENEFITS @ 20% Million Rupees
	WHEAT	RICE	SEED COTTON	SUGAR CANE	WHEAT @ Rs 1678	RICE @ Rs 2916	COTTON @ Rs 5172	S.CANE @ Rs 189	TOTAL	
Base year 0	0.00	0.00	0.00	0.00	0.00	0.00	0.00	0.00	0.00	0.00
1	0.00	0.00	0.00	0.00	0.00	0.00	0.00	0.00	0.00	0.00
2	0.58	0.02	0.44	1.02	0.97	0.07	2.26	0.19	3.49	0.70
3	2.70	0.11	2.05	4.66	4.53	0.31	10.61	0.88	16.33	3.27
4	6.95	0.26	5.30	11.67	11.66	0.77	27.40	2.21	42.04	8.41
5	13.14	0.48	10.05	21.47	22.04	1.40	52.00	4.06	79.50	15.90
6	19.33	0.68	14.86	30.73	32.43	1.98	76.84	5.81	117.06	23.41
7	23.21	0.78	17.91	35.86	38.94	2.28	92.64	6.78	140.64	28.13
8	27.09	0.88	20.99	40.65	45.46	2.56	108.58	7.68	164.29	32.86
9	30.98	0.96	24.10	45.10	51.99	2.80	124.67	8.52	187.99	37.60
10	34.88	1.03	27.24	49.21	58.52	3.01	140.90	9.30	211.74	42.35
11	36.58	1.05	28.50	49.38	61.38	3.05	147.41	9.33	221.16	44.23
12	38.28	1.05	29.77	49.44	64.23	3.07	153.96	9.34	230.60	46.12
13	39.98	1.05	31.05	49.39	67.09	3.07	160.57	9.33	240.06	48.01
14	41.69	1.05	32.33	49.23	69.95	3.06	167.23	9.30	249.54	49.91
15	43.40	1.04	33.63	48.96	72.82	3.03	173.95	9.25	259.04	51.81
16	45.11	1.02	34.94	48.59	75.69	2.98	180.71	9.18	268.56	53.71
17	46.82	1.00	36.26	48.10	78.56	2.91	187.54	9.09	278.10	55.62
18	48.53	0.97	37.59	47.51	81.44	2.83	194.41	8.98	287.67	57.53
19	50.25	0.94	38.93	46.81	84.32	2.74	201.34	8.85	297.25	59.45
20	51.97	0.90	40.28	46.00	87.20	2.62	208.33	8.69	306.85	61.37
21	51.97	0.90	40.28	46.00	87.20	2.62	208.33	8.69	306.85	61.37
22	51.97	0.90	40.28	46.00	87.20	2.62	208.33	8.69	306.85	61.37
23	51.97	0.90	40.28	46.00	87.20	2.62	208.33	8.69	306.85	61.37
24	51.97	0.90	40.28	46.00	87.20	2.62	208.33	8.69	306.85	61.37
25	51.97	0.90	40.28	46.00	87.20	2.62	208.33	8.69	306.85	61.37
26	51.97	0.90	40.28	46.00	87.20	2.62	208.33	8.69	306.85	61.37
27	51.97	0.90	40.28	46.00	87.20	2.62	208.33	8.69	306.85	61.37
28	51.97	0.90	40.28	46.00	87.20	2.62	208.33	8.69	306.85	61.37
29	51.97	0.90	40.28	46.00	87.20	2.62	208.33	8.69	306.85	61.37
30	51.97	0.90	40.28	46.00	87.20	2.62	208.33	8.69	306.85	61.37

SOURCE : Production , Table 9.9.4
Economic Prices estimated by Consultants.

BEST AVAILABLE DOCUMENT

540

TABLE 9.10.5

AMOUNT AND VALUE OF INCREASES IN PRODUCTION OF MAJOR CROPS,

NASIR SYSTEM

(Value at Economic Prices)

YEARS	INCREASE IN PRODUCTION				VALUE OF INCREASE (Rs.million)					PROJECT BENEFITS @ 20% Million Rupees
	WHEAT	RICE	SEED COTTON	SUGAR CANE	WHEAT @ Rs 1748	RICE @ Rs 1321	COTTON @ Rs 5242	S.CANE @ Rs 179	TOTAL	
Base year 0	0.00	0.00	0.00	0.00	0.00	0.00	0.00	0.00	0.00	0.00
1	0.00	0.00	0.00	0.00	0.00	0.00	0.00	0.00	0.00	0.00
2	0.06	0.06	0.03	1.41	0.11	0.08	0.13	0.25	0.57	0.11
3	0.29	0.26	0.12	6.73	0.51	0.35	0.61	1.20	2.68	0.54
4	0.75	0.67	0.29	17.65	1.31	0.88	1.54	3.16	6.90	1.38
5	1.42	1.24	0.55	33.98	2.48	1.64	2.86	6.08	13.07	2.61
6	2.09	1.80	0.79	50.91	3.65	2.38	4.12	9.11	19.26	3.85
7	2.51	2.13	0.92	62.22	4.38	2.81	4.84	11.14	23.16	4.63
8	2.92	2.44	1.05	73.91	5.11	3.23	5.52	13.23	27.09	5.42
9	3.34	2.75	1.18	85.97	5.84	3.63	6.17	15.39	31.03	6.21
10	3.76	3.04	1.29	98.42	6.57	4.02	6.78	17.62	34.99	7.00
11	4.06	3.23	1.39	107.07	7.09	4.27	7.30	19.16	37.82	7.56
12	4.36	3.42	1.48	115.95	7.61	4.51	7.78	20.76	40.66	8.13
13	4.65	3.59	1.57	125.07	8.14	4.75	8.23	22.39	43.49	8.70
14	4.95	3.76	1.65	134.42	8.66	4.97	8.64	24.06	46.33	9.27
15	5.25	3.92	1.72	144.01	9.18	5.18	9.03	25.78	49.16	9.83
16	5.55	4.07	1.79	153.84	9.70	5.38	9.38	27.54	52.00	10.40
17	5.85	4.21	1.85	163.90	10.22	5.57	9.71	29.34	54.83	10.97
18	6.15	4.35	1.91	174.20	10.74	5.74	10.00	31.18	57.67	11.53
19	6.45	4.48	1.96	184.73	11.27	5.91	10.26	33.07	60.50	12.10
20	6.74	4.59	2.00	195.50	11.79	6.07	10.48	34.99	63.33	12.67
21	6.74	4.59	2.00	195.50	11.79	6.07	10.48	34.99	63.33	12.67
22	6.74	4.59	2.00	195.50	11.79	6.07	10.48	34.99	63.33	12.67
23	6.74	4.59	2.00	195.50	11.79	6.07	10.48	34.99	63.33	12.67
24	6.74	4.59	2.00	195.50	11.79	6.07	10.48	34.99	63.33	12.67
25	6.74	4.59	2.00	195.50	11.79	6.07	10.48	34.99	63.33	12.67
26	6.74	4.59	2.00	195.50	11.79	6.07	10.48	34.99	63.33	12.67
27	6.74	4.59	2.00	195.50	11.79	6.07	10.48	34.99	63.33	12.67
28	6.74	4.59	2.00	195.50	11.79	6.07	10.48	34.99	63.33	12.67
29	6.74	4.59	2.00	195.50	11.79	6.07	10.48	34.99	63.33	12.67
30	6.74	4.59	2.00	195.50	11.79	6.07	10.48	34.99	63.33	12.67

SOURCE : Production , Table 9.9.5
Economic Prices estimated by Consultants.

BEST AVAILABLE DOCUMENT

TABLE 9.10.6

AMOUNT AND VALUE OF INCREASES IN PRODUCTION OF MAJOR CROPS,

JAMRAO & MITHRAO SYSTEM

(Value at Economic Prices)

YEARS	INCREASE IN PRODUCTION				VALUE OF INCREASE (Rs.million)					PROJECT BENEFITS @ 20% Million Rupees
	WHEAT	RICE	SEED COTTON	SUGAR CANE	WHEAT @ Rs 1748	RICE @ Rs 1321	COTTON @ Rs 5242	CANE @ Rs 179	TOTAL	
Base year 0	0.00	0.00	0.00	0.00	0.00	0.00	0.00	0.00	0.00	0.00
1	0.00	0.00	0.00	0.00	0.00	0.00	0.00	0.00	0.00	0.00
2	0.14	0.01	0.06	0.18	0.25	0.01	0.32	0.03	0.61	0.12
3	0.66	0.02	0.28	0.85	1.16	0.03	1.48	0.15	2.82	0.56
4	1.71	0.06	0.72	2.20	2.98	0.08	3.79	0.39	7.25	1.45
5	3.23	0.12	1.36	4.20	5.65	0.16	7.12	0.75	13.68	2.74
.6	4.77	0.18	1.98	6.23	8.33	0.24	10.40	1.11	20.09	4.02
7	5.74	0.22	2.36	7.54	10.03	0.29	12.39	1.35	24.07	4.81
8	6.72	0.26	2.74	8.86	11.74	0.35	14.37	1.59	28.04	5.61
9	7.70	0.30	3.11	10.21	13.46	0.40	16.31	1.83	31.99	6.40
10	8.69	0.34	3.48	11.59	15.19	0.45	18.23	2.07	35.94	7.19
11	9.36	0.38	3.75	12.52	16.37	0.50	19.64	2.24	38.75	7.75
12	10.04	0.42	4.01	13.46	17.56	0.55	21.04	2.41	41.56	8.31
13	10.73	0.46	4.28	14.42	18.75	0.61	22.41	2.58	44.35	8.87
14	11.41	0.50	4.53	15.39	19.95	0.66	23.77	2.75	47.13	9.43
15	12.11	0.54	4.79	16.37	21.16	0.71	25.10	2.93	49.90	9.98
16	12.80	0.58	5.04	17.37	22.38	0.76	26.41	3.11	52.66	10.53
17	13.50	0.62	5.28	18.38	23.60	0.82	27.70	3.29	55.41	11.08
18	14.21	0.66	5.53	19.41	24.83	0.88	28.97	3.47	58.15	11.63
19	14.91	0.71	5.77	20.45	26.07	0.93	30.22	3.66	60.88	12.18
20	15.63	0.75	6.00	21.50	27.31	0.99	31.45	3.85	63.60	12.72
21	15.63	0.75	6.00	21.50	27.31	0.99	31.45	3.85	63.60	12.72
22	15.63	0.75	6.00	21.50	27.31	0.99	31.45	3.85	63.60	12.72
23	15.63	0.75	6.00	21.50	27.31	0.99	31.45	3.85	63.60	12.72
24	15.63	0.75	6.00	21.50	27.31	0.99	31.45	3.85	63.60	12.72
25	15.63	0.75	6.00	21.50	27.31	0.99	31.45	3.85	63.60	12.72
26	15.63	0.75	6.00	21.50	27.31	0.99	31.45	3.85	63.60	12.72
27	15.63	0.75	6.00	21.50	27.31	0.99	31.45	3.85	63.60	12.72
28	15.63	0.75	6.00	21.50	27.31	0.99	31.45	3.85	63.60	12.72
29	15.63	0.75	6.00	21.50	27.31	0.99	31.45	3.85	63.60	12.72
30	15.63	0.75	6.00	21.50	27.31	0.99	31.45	3.85	63.60	12.72

SOURCE : Production ; Table 9.9.6
Economic Prices estimated by Consultants.

BEST AVAILABLE DOCUMENT

TABLE 9.10.7

AMOUNT AND VALUE OF INCREASES IN PRODUCTION OF MAJOR CROPS,

GOTKI SYSTEM

(Value at Economic Prices)

YEARS	INCREASE IN PRODUCTION				VALUE OF INCREASE (Rs.million)					PROJECT BENEFITS @ 20% Million Rupees
	WHEAT	RICE	SEED COTTON	SUGAR CANE	WHEAT @ Rs 1748	RICE @ Rs 1321	COTTON @ Rs 5242	S.CANE @ Rs 179	TOTAL	
Base year 0	0.00	0.00	0.00	0.00	0.00	0.00	0.00	0.00	0.00	0.00
1	0.00	0.00	0.00	0.00	0.00	0.00	0.00	0.00	0.00	0.00
2	0.33	0.01	0.12	0.82	0.57	0.01	0.65	0.15	1.38	0.28
3	1.53	0.03	0.58	3.83	2.68	0.05	3.03	0.69	6.44	1.29
4	3.94	0.09	1.49	9.84	6.89	0.11	7.79	1.76	16.55	3.31
5	7.45	0.16	2.81	18.58	13.02	0.21	14.71	3.33	31.26	6.25
6	10.96	0.23	4.13	27.32	19.16	0.30	21.63	4.89	45.98	9.20
7	13.17	0.26	4.95	32.77	23.02	0.35	25.96	5.87	55.19	11.04
8	15.38	0.30	5.78	38.21	26.88	0.39	30.28	6.84	64.39	12.88
9	17.59	0.32	6.60	43.65	30.74	0.43	34.61	7.81	73.60	14.72
10	19.80	0.35	7.43	49.09	34.62	0.46	38.93	8.79	82.80	16.56
11	22.02	0.38	8.25	54.52	38.50	0.50	43.26	9.76	92.01	18.40
12	24.25	0.40	9.08	59.95	42.39	0.52	47.59	10.73	101.23	20.25
13	26.48	0.41	9.90	65.37	46.28	0.55	51.91	11.70	110.44	22.09
14	28.71	0.43	10.73	70.79	50.18	0.57	56.24	12.67	119.66	23.93
15	30.94	0.44	11.55	76.20	54.09	0.58	60.56	13.64	128.87	25.77
16	33.18	0.45	12.38	81.61	58.00	0.59	64.89	14.61	138.09	27.62
17	35.43	0.45	13.20	87.01	61.93	0.60	69.22	15.58	147.32	29.46
18	37.67	0.45	14.03	92.41	65.85	0.60	73.54	16.54	156.54	31.31
19	39.92	0.45	14.85	97.81	69.79	0.60	77.87	17.51	165.76	33.15
20	42.18	0.45	15.68	103.20	73.73	0.59	82.19	18.47	174.99	35.00
21	42.18	0.45	15.68	103.20	73.73	0.59	82.19	18.47	174.99	35.00
22	42.18	0.45	15.68	103.20	73.73	0.59	82.19	18.47	174.99	35.00
23	42.18	0.45	15.68	103.20	73.73	0.59	82.19	18.47	174.99	35.00
24	42.18	0.45	15.68	103.20	73.73	0.59	82.19	18.47	174.99	35.00
25	42.18	0.45	15.68	103.20	73.73	0.59	82.19	18.47	174.99	35.00
26	42.18	0.45	15.68	103.20	73.73	0.59	82.19	18.47	174.99	35.00
27	42.18	0.45	15.68	103.20	73.73	0.59	82.19	18.47	174.99	35.00
28	42.18	0.45	15.68	103.20	73.73	0.59	82.19	18.47	174.99	35.00
29	42.18	0.45	15.68	103.20	73.73	0.59	82.19	18.47	174.99	35.00
30	42.18	0.45	15.68	103.20	73.73	0.59	82.19	18.47	174.99	35.00

SOURCE : Production, Table 9.9.7
Economic Prices estimated by Consultants.

BEST AVAILABLE DOCUMENT

543

TABLE 9.10.8

AMOUNT AND VALUE OF INCREASES IN PRODUCTION OF MAJOR CROPS,

ROHRI SYSTEM

(Value at Economic Prices)

YEARS	INCREASE IN PRODUCTION				VALUE OF INCREASE (Rs.million)					PROJECT BENEFITS @ 20% Million Rupees
	WHEAT	RICE	SEED COTTON	SUGAR CANE	WHEAT @ Rs 1748	RICE @ Rs 1321	COTTON @ Rs 5242	S.CANE @ Rs 179	TOTAL	
Base year 0	0.00	0.00	0.00	0.00	0.00	0.00	0.00	0.00	0.00	0.00
1	0.00	0.00	0.00	0.00	0.00	0.00	0.00	0.00	0.00	0.00
2	0.09	0.01	0.04	0.12	0.15	0.01	0.20	0.02	0.38	0.08
3	0.40	0.03	0.17	0.56	0.71	0.04	0.91	0.10	1.76	0.35
4	1.04	0.08	0.45	1.44	1.82	0.10	2.34	0.26	4.52	0.90
5	1.97	0.15	0.84	2.72	3.45	0.20	4.41	0.49	8.54	1.71
6	2.91	0.22	1.23	4.00	5.09	0.29	6.47	0.72	12.56	2.51
7	3.50	0.26	1.48	4.80	6.12	0.34	7.74	0.86	15.06	3.01
8	4.10	0.30	1.72	5.60	7.17	0.39	9.00	1.00	17.57	3.51
9	4.70	0.34	1.96	6.40	8.22	0.44	10.26	1.15	20.07	4.01
10	5.31	0.38	2.20	7.20	9.27	0.50	11.51	1.29	22.57	4.51
11	5.91	0.41	2.43	8.00	10.34	0.55	12.75	1.43	25.06	5.01
12	6.52	0.45	2.67	8.80	11.41	0.59	13.98	1.58	27.56	5.51
13	7.14	0.49	2.90	9.60	12.48	0.64	15.21	1.72	30.05	6.01
14	7.76	0.52	3.13	10.40	13.56	0.69	16.43	1.86	32.54	6.51
15	8.38	0.56	3.37	11.20	14.65	0.74	17.64	2.00	35.03	7.01
16	9.01	0.59	3.60	12.00	15.75	0.78	18.85	2.15	37.52	7.50
17	9.64	0.62	3.82	12.80	16.85	0.82	20.04	2.29	40.01	8.00
18	10.27	0.66	4.05	13.60	17.95	0.87	21.23	2.43	42.49	8.50
19	10.91	0.69	4.28	14.40	19.07	0.91	22.41	2.58	44.97	8.99
20	11.55	0.72	4.50	15.20	20.19	0.95	23.59	2.72	47.45	9.49
21	11.55	0.72	4.50	15.20	20.19	0.95	23.59	2.72	47.45	9.49
22	11.55	0.72	4.50	15.20	20.19	0.95	23.59	2.72	47.45	9.49
23	11.55	0.72	4.50	15.20	20.19	0.95	23.59	2.72	47.45	9.49
24	11.55	0.72	4.50	15.20	20.19	0.95	23.59	2.72	47.45	9.49
25	11.55	0.72	4.50	15.20	20.19	0.95	23.59	2.72	47.45	9.49
26	11.55	0.72	4.50	15.20	20.19	0.95	23.59	2.72	47.45	9.49
27	11.55	0.72	4.50	15.20	20.19	0.95	23.59	2.72	47.45	9.49
28	11.55	0.72	4.50	15.20	20.19	0.95	23.59	2.72	47.45	9.49
29	11.55	0.72	4.50	15.20	20.19	0.95	23.59	2.72	47.45	9.49
30	11.55	0.72	4.50	15.20	20.19	0.95	23.59	2.72	47.45	9.49

SOURCE : Production , Table 9.9.8
Economic Prices estimated by Consultants.

BEST AVAILABLE DOCUMENT

TABLE 9.10.9

AMOUNT AND VALUE OF INCREASES IN PRODUCTION OF MAJOR CROPS,

DADU SYSTEM

(Value at Economic Prices)

YEARS	INCREASE IN PRODUCTION				VALUE OF INCREASE (Rs.million)					PROJECT BENEFITS @ 20% Million Rupees
	WHEAT	RICE	SEED COTTON	SUGAR CANE	WHEAT @ Rs 1748	RICE @ Rs 1321	COTTON @ Rs 5242	S.CANE @ Rs 179	TOTAL	
Base year 0	0.00	0.00	0.00	0.00	0.00	0.00	0.00	0.00	0.00	0.00
1	0.00	0.00	0.00	0.00	0.00	0.00	0.00	0.00	0.00	0.00
2	0.02	0.05	.00	0.04	0.04	0.07	0.01	0.01	0.12	0.02
3	0.10	0.24	0.01	0.20	0.17	0.31	0.04	0.04	0.56	0.11
4	0.25	0.62	0.02	0.53	0.44	0.82	0.10	0.09	1.45	0.29
5	0.47	1.18	0.03	1.03	0.82	1.56	0.18	0.18	2.75	0.55
6	0.68	1.76	0.05	1.55	1.20	2.32	0.27	0.28	4.07	0.81
7	0.81	2.13	0.06	1.92	1.42	2.81	0.33	0.34	4.91	0.98
8	0.94	2.51	0.07	2.30	1.64	3.32	0.39	0.41	5.76	1.15
9	1.06	2.90	0.09	2.69	1.86	3.83	0.45	0.48	6.62	1.32
10	1.18	3.30	0.10	3.11	2.07	4.36	0.51	0.56	7.49	1.50
11	1.30	3.70	0.11	3.54	2.27	4.89	0.58	0.63	8.37	1.67
12	1.42	4.11	0.12	3.99	2.47	5.43	0.64	0.71	9.26	1.85
13	1.53	4.53	0.14	4.45	2.67	5.99	0.71	0.80	10.16	2.03
14	1.64	4.96	0.15	4.94	2.86	6.55	0.78	0.88	11.07	2.21
15	1.74	5.39	0.16	5.44	3.05	7.13	0.84	0.97	11.99	2.40
16	1.85	5.84	0.17	5.96	3.23	7.71	0.91	1.07	12.92	2.58
17	1.95	6.29	0.19	6.49	3.41	8.30	0.98	1.16	13.86	2.77
18	2.05	6.74	0.20	7.04	3.58	8.91	1.06	1.26	14.81	2.96
19	2.15	7.21	0.22	7.61	3.75	9.52	1.13	1.36	15.77	3.15
20	2.24	7.68	0.23	8.20	3.92	10.15	1.21	1.47	16.73	3.35
21	2.24	7.68	0.23	8.20	3.92	10.15	1.21	1.47	16.73	3.35
22	2.24	7.68	0.23	8.20	3.92	10.15	1.21	1.47	16.73	3.35
23	2.24	7.68	0.23	8.20	3.92	10.15	1.21	1.47	16.73	3.35
24	2.24	7.68	0.23	8.20	3.92	10.15	1.21	1.47	16.73	3.35
25	2.24	7.68	0.23	8.20	3.92	10.15	1.21	1.47	16.73	3.35
26	2.24	7.68	0.23	8.20	3.92	10.15	1.21	1.47	16.73	3.35
27	2.24	7.68	0.23	8.20	3.92	10.15	1.21	1.47	16.73	3.35
28	2.24	7.68	0.23	8.20	3.92	10.15	1.21	1.47	16.73	3.35
29	2.24	7.68	0.23	8.20	3.92	10.15	1.21	1.47	16.73	3.35
30	2.24	7.68	0.23	8.20	3.92	10.15	1.21	1.47	16.73	3.35

SOURCE : Production , Table 9.9.9
Economic Prices estimated by Consultants.

BEST AVAILABLE DOCUMENT

TABLE 9.10.10

AMOUNT AND VALUE OF INCREASES IN PRODUCTION OF MAJOR CROPS,

KABUL SYSTEM

(Value at Economic Prices)

YEARS	INCREASE IN PRODUCTION				VALUE OF INCREASE (Rs.million)					PROJECT BENEFITS @ 20% Million Rupees
	WHEAT	RICE	SEED COTTON	SUGAR CANE	WHEAT @ Rs 1633	RICE @ Rs 1245	MAIZE @ Rs 1409	S.CANE @ Rs 189	TOTAL	
Base year 0	0.00	0.00	0.00	0.00	0.00	0.00	0.00	0.00	0.00	0.00
1	0.00	0.00	0.00	0.00	0.00	0.00	0.00	0.00	0.00	0.00
2	0.07	0.00	0.03	0.76	0.11	0.00	0.04	0.14	0.30	0.06
3	0.32	0.00	0.14	3.54	0.53	0.00	0.20	0.67	1.40	0.28
4	0.83	0.00	0.37	9.07	1.36	0.00	0.52	1.71	3.59	0.72
5	1.58	0.00	0.69	17.10	2.57	0.00	0.98	3.23	6.78	1.36
6	2.32	0.00	1.02	25.09	3.78	0.00	1.44	4.74	9.97	1.99
7	2.78	0.00	1.23	30.04	4.54	0.00	1.73	5.68	11.95	2.39
8	3.24	0.00	1.44	34.97	5.29	0.00	2.03	6.61	13.93	2.79
9	3.70	0.00	1.65	39.88	6.04	0.00	2.32	7.54	15.90	3.18
10	4.16	0.00	1.86	44.76	6.80	0.00	2.62	8.46	17.87	3.57
11	4.62	0.00	2.07	49.63	7.55	0.00	2.91	9.38	19.84	3.97
12	5.08	0.00	2.28	54.47	8.30	0.00	3.21	10.29	21.80	4.36
13	5.54	0.00	2.49	59.29	9.05	0.00	3.51	11.21	23.76	4.75
14	6.00	0.00	2.70	64.08	9.80	0.00	3.81	12.11	25.72	5.14
15	6.46	0.00	2.92	68.86	10.54	0.00	4.11	13.01	27.67	5.53
16	6.91	0.00	3.13	73.61	11.29	0.00	4.41	13.91	29.62	5.92
17	7.37	0.00	3.35	78.34	12.04	0.00	4.72	14.81	31.56	6.31
18	7.83	0.00	3.56	83.05	12.78	0.00	5.02	15.70	33.50	6.70
19	8.28	0.00	3.78	87.74	13.53	0.00	5.33	16.58	35.44	7.09
20	8.74	0.00	4.00	92.40	14.27	0.00	5.64	17.46	37.37	7.47
21	8.74	0.00	4.00	92.40	14.27	0.00	5.64	17.46	37.37	7.47
22	8.74	0.00	4.00	92.40	14.27	0.00	5.64	17.46	37.37	7.47
23	8.74	0.00	4.00	92.40	14.27	0.00	5.64	17.46	37.37	7.47
24	8.74	0.00	4.00	92.40	14.27	0.00	5.64	17.46	37.37	7.47
25	8.74	0.00	4.00	92.40	14.27	0.00	5.64	17.46	37.37	7.47
26	8.74	0.00	4.00	92.40	14.27	0.00	5.64	17.46	37.37	7.47
27	8.74	0.00	4.00	92.40	14.27	0.00	5.64	17.46	37.37	7.47
28	8.74	0.00	4.00	92.40	14.27	0.00	5.64	17.46	37.37	7.47
29	8.74	0.00	4.00	92.40	14.27	0.00	5.64	17.46	37.37	7.47
30	8.74	0.00	4.00	92.40	14.27	0.00	5.64	17.46	37.37	7.47

SOURCE : Production , Table 9.9.10
Economic Prices estimated by Consultants.

BEST AVAILABLE DOCUMENT

546

TABLE 9.10.11

AMOUNT AND VALUE OF INCREASES IN PRODUCTION OF MAJOR CROPS,

PAHARPUR SYSTEM

(Value at Economic Prices)

YEARS	INCREASE IN PRODUCTION				VALUE OF INCREASE (Rs.million)					PROJECT BENEFITS @ 20% Million Rupees
	WHEAT	RICE	MAIZE	SUGAR CANE	WHEAT @ Rs 1633	RICE @ Rs 1245	MAIZE @ Rs 1409	S.CANE @ Rs 189	TOTAL	
Base year 0	0.00	0.00	0.00	0.00	0.00	0.00	0.00	0.00	0.00	0.00
1	0.00	0.00	0.00	0.00	0.00	0.00	0.00	0.00	0.00	0.00
2	0.06	0.00	.00	0.06	0.10	0.00	.00	0.01	0.11	0.02
3	0.28	0.00	0.01	0.29	0.46	0.00	0.01	0.06	0.53	0.11
4	0.72	0.00	0.03	0.80	1.17	0.00	0.04	0.15	1.36	0.27
5	1.34	0.00	0.06	1.60	2.20	0.00	0.08	0.30	2.58	0.52
6	1.96	0.00	0.10	2.49	3.20	0.00	0.13	0.47	3.81	0.76
7	2.34	0.00	0.13	3.14	3.82	0.00	0.18	0.59	4.59	0.92
8	2.71	0.00	0.16	3.84	4.42	0.00	0.22	0.73	5.37	1.07
9	3.07	0.00	0.19	4.59	5.01	0.00	0.27	0.87	6.16	1.23
10	3.43	0.00	0.23	5.40	5.60	0.00	0.33	1.02	6.95	1.39
11	3.59	0.00	0.27	5.96	5.86	0.00	0.37	1.13	7.36	1.47
12	3.74	0.00	0.30	6.55	6.11	0.00	0.42	1.24	7.77	1.55
13	3.89	0.00	0.33	7.17	6.36	0.00	0.47	1.35	8.18	1.64
14	4.04	0.00	0.37	7.81	6.60	0.00	0.52	1.48	8.60	1.72
15	4.19	0.00	0.41	8.48	6.84	0.00	0.58	1.60	9.02	1.80
16	4.33	0.00	0.45	9.18	7.08	0.00	0.63	1.74	9.45	1.89
17	4.48	0.00	0.49	9.91	7.31	0.00	0.69	1.87	9.87	1.97
18	4.61	0.00	0.54	10.66	7.54	0.00	0.75	2.02	10.31	2.06
19	4.75	0.00	0.58	11.44	7.76	0.00	0.82	2.16	10.74	2.15
20	4.88	0.00	0.63	12.25	7.97	0.00	0.89	2.32	11.18	2.24
21	4.88	0.00	0.63	12.25	7.97	0.00	0.89	2.32	11.18	2.24
22	4.88	0.00	0.63	12.25	7.97	0.00	0.89	2.32	11.18	2.24
23	4.88	0.00	0.63	12.25	7.97	0.00	0.89	2.32	11.18	2.24
24	4.88	0.00	0.63	12.25	7.97	0.00	0.89	2.32	11.18	2.24
25	4.88	0.00	0.63	12.25	7.97	0.00	0.89	2.32	11.18	2.24
26	4.88	0.00	0.63	12.25	7.97	0.00	0.89	2.32	11.18	2.24
27	4.88	0.00	0.63	12.25	7.97	0.00	0.89	2.32	11.18	2.24
28	4.88	0.00	0.63	12.25	7.97	0.00	0.89	2.32	11.18	2.24
29	4.88	0.00	0.63	12.25	7.97	0.00	0.89	2.32	11.18	2.24
30	4.88	0.00	0.63	12.25	7.97	0.00	0.89	2.32	11.18	2.24

SOURCE : Production , Table 9.9.11
Economic Prices estimated by Consultants.

BEST AVAILABLE DOCUMENT

547

TABLE 9.10.12

AMOUNT AND VALUE OF INCREASES IN PRODUCTION OF MAJOR CROPS,

MARWAT SYSTEM

(Value at Economic Prices)

YEARS	INCREASE IN PRODUCTION				VALUE OF INCREASE (Rs.million)					PROJECT BENEFITS @ 20% Million Rupees
	WHEAT	RICE	MAIZE	SUGAR CANE	WHEAT @ Rs 1633	RICE @ Rs 1245	MAIZE @ Rs 1409	S.CANE @ Rs 189	TOTAL	
Base year 0	0.00	0.00	0.00	0.00	0.00	0.00	0.00	0.00	0.00	0.00
1	0.00	0.00	0.00	0.00	0.00	0.00	0.00	0.00	0.00	0.00
2	0.51	0.00	0.12	0.29	0.84	0.00	0.17	0.05	1.07	0.21
3	2.40	0.00	0.56	1.41	3.92	0.00	0.80	0.27	4.98	1.00
4	6.16	0.00	1.44	3.81	10.06	0.00	2.04	0.72	12.82	2.56
5	11.63	0.00	2.71	7.56	18.99	0.00	3.82	1.43	24.25	4.85
6	17.09	0.00	3.97	11.65	27.91	0.00	5.60	2.20	35.71	7.14
7	20.49	0.00	4.74	14.63	33.47	0.00	6.68	2.76	42.91	8.58
8	23.89	0.00	5.50	17.82	39.02	0.00	7.75	3.37	50.14	10.03
9	27.29	0.00	6.25	21.22	44.56	0.00	8.81	4.01	57.38	11.48
10	30.67	0.00	7.00	24.84	50.09	0.00	9.86	4.69	64.64	12.93
11	32.07	0.00	7.12	26.59	52.37	0.00	10.03	5.03	67.42	13.48
12	33.47	0.00	7.23	28.40	54.65	0.00	10.19	5.37	70.21	14.04
13	34.86	0.00	7.35	30.27	56.92	0.00	10.35	5.72	73.00	14.60
14	36.25	0.00	7.46	32.20	59.20	0.00	10.51	6.09	75.79	15.16
15	37.64	0.00	7.57	34.19	61.46	0.00	10.67	6.46	78.59	15.72
16	39.02	0.00	7.68	36.23	63.73	0.00	10.82	6.85	81.40	16.28
17	40.41	0.00	7.79	38.33	65.99	0.00	10.97	7.25	84.21	16.84
18	41.79	0.00	7.89	40.50	68.25	0.00	11.12	7.65	87.02	17.40
19	43.17	0.00	8.00	42.72	70.50	0.00	11.27	8.07	89.84	17.97
20	44.55	0.00	8.10	45.00	72.75	0.00	11.41	8.51	92.67	18.53
21	44.55	0.00	8.10	45.00	72.75	0.00	11.41	8.51	92.67	18.53
22	44.55	0.00	8.10	45.00	72.75	0.00	11.41	8.51	92.67	18.53
23	44.55	0.00	8.10	45.00	72.75	0.00	11.41	8.51	92.67	18.53
24	44.55	0.00	8.10	45.00	72.75	0.00	11.41	8.51	92.67	18.53
25	44.55	0.00	8.10	45.00	72.75	0.00	11.41	8.51	92.67	18.53
26	44.55	0.00	8.10	45.00	72.75	0.00	11.41	8.51	92.67	18.53
27	44.55	0.00	8.10	45.00	72.75	0.00	11.41	8.51	92.67	18.53
28	44.55	0.00	8.10	45.00	72.75	0.00	11.41	8.51	92.67	18.53
29	44.55	0.00	8.10	45.00	72.75	0.00	11.41	8.51	92.67	18.53
30	44.55	0.00	8.10	45.00	72.75	0.00	11.41	8.51	92.67	18.53

SOURCE : Production , Table 9.9.12
Economic Prices estimated by Consultants.

BEST AVAILABLE DOCUMENT

548

TABLE 9.10.13

AMOUNT AND VALUE OF INCREASES IN PRODUCTION OF MAJOR CROPS,

UPPER SKAT SYSTEM

(Value at Economic Prices)

YEARS	INCREASE IN PRODUCTION				VALUE OF INCREASE (Rs.million)					PROJECT BENEFITS @ 20% Million Rupees
	WHEAT	RICE	SEED COTTON	SUGAR CANE	WHEAT @ Rs 1633	RICE @ Rs 1245	MAIZE @ Rs 1409	S.CANE @ Rs 189	TOTAL	
Base year 0	0.00	0.00	0.00	0.00	0.00	0.00	0.00	0.00	0.00	0.00
1	0.00	0.00	0.00	0.00	0.00	0.00	0.00	0.00	0.00	0.00
2	0.51	0.29	0.37	2.45	0.83	0.36	0.52	0.46	2.17	0.43
3	2.35	1.36	1.73	11.51	3.84	1.69	2.44	2.18	10.15	2.03
4	6.01	3.49	4.47	29.87	9.82	4.34	6.30	5.65	26.11	5.22
5	11.28	6.59	8.50	56.93	18.41	8.21	11.98	10.76	49.36	9.87
6	16.47	9.69	12.57	84.46	26.89	12.07	17.72	15.96	72.63	14.53
7	19.62	11.63	15.18	102.25	32.04	14.48	21.38	19.32	87.23	17.45
8	22.73	13.56	17.81	120.32	37.12	16.89	25.09	22.74	101.84	20.37
9	25.79	15.50	20.47	138.70	42.12	19.30	28.84	26.21	116.47	23.29
10	28.81	17.43	23.16	157.37	47.05	21.70	32.64	29.74	131.13	26.23
11	31.78	19.37	25.88	176.33	51.90	24.11	36.47	33.33	145.81	29.16
12	34.70	21.30	28.63	195.60	56.67	26.52	40.35	36.97	160.51	32.10
13	37.58	23.23	31.41	215.15	61.37	28.93	44.26	40.66	175.23	35.05
14	40.41	25.17	34.22	235.01	66.00	31.33	48.22	44.42	189.97	37.99
15	43.20	27.10	37.06	255.16	70.55	33.74	52.22	48.23	204.73	40.95
16	45.94	29.03	39.93	275.61	75.02	36.14	56.26	52.09	219.52	43.90
17	48.63	30.96	42.83	296.35	79.42	38.54	60.35	56.01	234.32	46.86
18	51.28	32.89	45.76	317.39	83.74	40.95	64.47	59.99	249.15	49.83
19	53.88	34.82	48.71	338.73	87.99	43.35	68.64	64.02	264.00	52.80
20	56.44	36.75	51.70	360.36	92.17	45.75	72.85	68.11	278.87	55.77
21	56.44	36.75	51.70	360.36	92.17	45.75	72.85	68.11	278.87	55.77
22	56.44	36.75	51.70	360.36	92.17	45.75	72.85	68.11	278.87	55.77
23	56.44	36.75	51.70	360.36	92.17	45.75	72.85	68.11	278.87	55.77
24	56.44	36.75	51.70	360.36	92.17	45.75	72.85	68.11	278.87	55.77
25	56.44	36.75	51.70	360.36	92.17	45.75	72.85	68.11	278.87	55.77
26	56.44	36.75	51.70	360.36	92.17	45.75	72.85	68.11	278.87	55.77
27	56.44	36.75	51.70	360.36	92.17	45.75	72.85	68.11	278.87	55.77
28	56.44	36.75	51.70	360.36	92.17	45.75	72.85	68.11	278.87	55.77
29	56.44	36.75	51.70	360.36	92.17	45.75	72.85	68.11	278.87	55.77
30	56.44	36.75	51.70	360.36	92.17	45.75	72.85	68.11	278.87	55.77

SOURCE : Production , Table 9.9.13
Economic Prices estimated by Consultants.

BEST AVAILABLE DOCUMENT

549

TABLE 9.11

OLD AND NEW ROAD NETWORKS AND REDUCTION IN OFF-ROAD HAULING DISTANCE

DISTRICTS	AREA OF DISTRICT Sq Km	HIGH TYPE ROADS Km	IRRIGATION SYSTEMS	IMPACTED AREA Sq Km	AREA Per Km OF ROAD Sq Km	ROADS IN IMPACTED AREA Km	AVERAGE DISTANCE FIELD TO ROAD Km	PROPOSED ROADS MILES	PROPOSED ROADS Km	TOTAL ROADS SYSTEM Km	NEW AVE. DISTANCE FIELD TO ROAD Km	REDUCTION IN OFF ROAD HAULING DISTANCE Km
PUNJAB												
JHANG	8900	843	JHANG BRANCH	4810	10.56	456	2.64	132.62	213	669	1.80	0.84
FAISALABAD	5840	563	GOGERA BRANCH	4250	10.37	410	2.59	86.84	140	549	1.93	0.66
OKARA	4390	415	DEPALPUR CANAL	4020	10.58	380	2.64	225.64	363	743	1.35	1.29
VEHARI	4370	564	MAILSI CANAL	3610	7.75	466	1.94	150.76	243	708	1.27	0.66
SIND												
BADIN	6490	572	NASIR BRANCH	1380	11.35	122	2.84	35.64	57	179	1.93	0.91
THARPARKAR	27390	628	JAMRAO & MITHRAO	4350	43.61	100	10.90	184.05	296	396	2.75	8.16
NAWABSHAH	7500	995	GOTKI FEEDER	2920	7.54	387	1.88	135.93	219	606	1.20	0.68
SUKKUR	11400	537	ROHRI CANAL	2350	21.23	111	5.31	61.99	100	210	2.79	2.52
DADU	15230	796	DADU CANAL	1840	19.13	96	4.78	64.74	104	200	2.30	2.49
NWFP												
PESHAWAR	4000	792	KABUL RIVER CANAL	960	5.05	190	1.26	19.15	31	221	1.09	0.18
D.I.KHAN	9010	579	PHARPUR CANAL	1240	15.56	80	3.89	31.62	51	131	2.37	1.52
BANNU	4390	323	MARWAT CANAL	4350	13.59	320	3.40	28.05	45	365	2.98	0.42
MARDAN	3140	448	UPPER SWAT CANAL	4210	7.01	601	1.75	82.88	133	734	1.43	0.32

SOURCE :Punjab Development Statistics 1985.
Chief Engineer, Highways, Hyderabad.
Important Socio-Economic Indicators of NWFP, 1987

BEST AVAILABLE DOCUMENT

550

Table No.9.12

Disposition of Sugarcane, by Systems

(Percentage)

System	Processed at Factory	Processed or Used in Field	Hauling Equivalent of Field Use	Proportion of Tonnage	
				Hauled	Not Hauled
Jhang	60	40	4	64	36
Gogera	50	50	5	55	45
Depalpur	60	40	4	64	36
Mailsi	0	100	9	9	91
Nasir	90	10	1	91	9
J & M*	20	80	7	27	73
Gotki	25	75	7	32	68
Rohri	15	85	8	23	77
Dadu	70	30	3	73	27
Kabul	40	60	5	45	55
Paharpur	30	70	6	36	64
Marwat	80	20	2	82	18
Upper Swat	90	10	1	91	9

* Jamrao and Mithrao

Source : Consultants' Estimates

BEST AVAILABLE DOCUMENT

551

Table 9.13.1

AGRICULTURAL PRODUCTION TO BE HAULED AND SAVINGS FROM NEW ROADS,

JHANG SYSTEM

(Volume 000 t)

YEAR	TOTAL AGRICULTURAL PRODUCTION	TOTAL CEREALS Prod.	REDUCTIONS: SEED,FEED LOSS @7.5% CEREALS	REDUCTIONS: CONSUMPTION @0.2t per cap.	REDUCTIONS: SUGAR CANE NOT HAULED 36%	CEREALS BALANCE HAULD IN (-) or OUT(+)	INCREASE INPUTS @ 1.2 OF Prod.	Net Tonnage for Hauling	OFF ROAD DISTANCE SAVED 0.84 Km	TOTAL SAVING @ 5.90/t/km Rupees in Million
0	1153.88	305.75	22.93	194.60	288.74	88.22	13.85	661.45	0.00	0.000
1	1162.37	310.67	23.30	200.44	289.85	86.93	13.95	662.73	0.00	0.000
2	1174.96	316.76	23.76	206.45	291.95	86.55	14.10	666.90	0.13	0.496
3	1198.54	326.00	24.45	212.64	296.72	88.91	14.38	679.12	0.29	1.178
4	1237.24	339.57	25.47	219.02	305.14	95.08	14.85	702.46	0.50	2.089
5	1289.68	357.07	26.78	225.59	316.89	104.69	15.48	735.89	0.71	3.100
6	1342.14	374.54	28.09	232.36	328.66	114.09	16.11	769.13	0.84	3.812
7	1378.10	387.26	29.04	239.33	336.44	118.88	16.54	789.83	0.84	3.914
8	1414.07	399.96	30.00	246.51	344.23	123.45	16.97	810.31	0.84	4.016
9	1450.05	412.64	30.95	253.91	352.02	127.78	17.40	830.57	0.84	4.116
10	1486.03	425.30	31.90	261.53	359.82	131.88	17.83	850.62	0.84	4.216
11	1515.91	437.12	32.78	269.37	365.81	134.96	18.19	866.14	0.84	4.293
12	1545.79	448.92	33.67	277.45	371.80	137.80	18.55	881.42	0.84	4.368
13	1575.66	460.70	34.55	285.78	377.79	140.37	18.91	896.45	0.84	4.443
14	1605.53	472.45	35.43	294.35	383.79	142.67	19.27	911.22	0.84	4.516
15	1635.40	484.19	36.31	303.18	389.80	144.70	19.62	925.73	0.84	4.588
16	1665.27	495.91	37.19	312.28	395.81	146.44	19.98	939.97	0.84	4.658
17	1695.13	507.60	38.07	321.64	401.83	147.89	20.34	953.93	0.84	4.728
18	1724.99	519.28	38.95	331.29	407.85	149.04	20.70	967.60	0.84	4.795
19	1754.85	530.93	39.82	341.23	413.87	149.88	21.06	980.98	0.84	4.862
20	1784.70	542.57	40.69	351.47	419.90	150.40	21.42	994.05	0.84	4.927
21	1784.70	542.57	40.69	362.01	419.90	139.86	21.42	983.51	0.84	4.874
22	1784.70	542.57	40.69	372.87	419.90	129.00	21.42	972.65	0.84	4.820
23	1784.70	542.57	40.69	384.06	419.90	117.81	21.42	961.46	0.84	4.765
24	1784.70	542.57	40.69	395.58	419.90	106.29	21.42	949.94	0.84	4.708
25	1784.70	542.57	40.69	407.45	419.90	94.42	21.42	938.07	0.84	4.649
26	1784.70	542.57	40.69	419.67	419.90	82.20	21.42	925.85	0.84	4.588
27	1784.70	542.57	40.69	432.26	419.90	69.61	21.42	913.26	0.84	4.526
28	1784.70	542.57	40.69	445.23	419.90	56.64	21.42	900.29	0.84	4.462
29	1784.70	542.57	40.69	458.59	419.90	43.28	21.42	886.93	0.84	4.396
30	1784.70	542.57	40.69	472.35	419.90	29.53	21.42	873.17	0.84	4.327

Source : Previous tables
Factors explained in text.

BEST AVAILABLE COPY

552

Table 9.13.2

AGRICULTURAL PRODUCTION TO BE HAULED AND SAVINGS FROM NEW ROADS,

GOGERA SYSTEM

(Volume 000 t)

YEAR	TOTAL AGRICULTURAL PRODUCTION	TOTAL CEREALS Prod.	REDUCTIONS: SEED,FEED LOSS @7.5% CEREALS	REDUCTIONS: CONSUMPTION @0.2t per cap.	REDUCTIONS: SUGAR CANE NOT HAULED 45%	CEREALS BALANCE HAULD IN(-) or OUT (+)	INCREASE INPUTS @ 1.2% OF Prod.	Net Tonnage for Hauling	OFF ROAD DISTANCE SAVED 0.66 Km	TOTAL SAVING @ 5.9/t/km Rupees in Million
0	2757.25	398.43	29.88	364.80	1055.61	3.75	33.09	1340.05	0.00	0.000
1	2756.53	405.21	30.39	373.92	1052.29	0.90	33.08	1333.01	0.00	0.000
2	2765.25	413.53	31.01	383.27	1052.50	-0.75	33.18	1331.65	0.10	0.778
3	2799.06	425.94	31.95	392.85	1062.11	1.15	33.59	1345.74	0.23	1.834
4	2867.02	444.02	33.30	402.67	1084.47	8.05	34.40	1380.98	0.40	3.227
5	2965.53	467.30	35.05	412.74	1118.18	19.51	35.59	1435.15	0.56	4.750
6	3063.06	490.69	36.80	423.06	1151.41	30.83	36.76	1488.55	0.66	5.796
7	3122.47	508.02	38.10	433.63	1170.29	36.29	37.47	1517.91	0.66	5.911
8	3181.24	525.44	39.41	444.47	1188.85	41.56	38.17	1546.68	0.66	6.023
9	3239.38	542.93	40.72	455.59	1207.11	46.63	38.87	1574.84	0.66	6.132
10	3296.88	560.51	42.04	466.97	1225.04	51.50	39.56	1602.38	0.66	6.240
11	3338.07	576.75	43.26	478.65	1236.27	54.84	40.06	1619.95	0.66	6.308
12	3378.80	593.05	44.48	490.62	1247.27	57.96	40.55	1636.98	0.66	6.374
13	3419.06	609.42	45.71	502.88	1258.03	60.83	41.03	1653.47	0.66	6.439
14	3458.85	625.86	46.94	515.45	1268.56	63.47	41.51	1669.41	0.66	6.501
15	3498.18	642.36	48.18	528.34	1278.85	65.85	41.98	1684.79	0.66	6.561
16	3537.04	658.94	49.42	541.55	1288.90	67.97	42.44	1699.61	0.66	6.618
17	3575.43	675.58	50.67	555.09	1298.72	69.82	42.91	1713.85	0.66	6.674
18	3613.35	692.28	51.92	568.96	1308.31	71.40	43.36	1727.52	0.66	6.727
19	3650.81	709.05	53.18	583.19	1317.66	72.69	43.81	1740.59	0.66	6.778
20	3687.79	725.89	54.44	597.77	1326.78	73.69	44.25	1753.06	0.66	6.826
21	3687.79	725.89	54.44	612.71	1326.78	58.74	44.25	1738.11	0.66	6.768
22	3687.79	725.89	54.44	628.03	1326.78	43.42	44.25	1722.80	0.66	6.709
23	3687.79	725.89	54.44	643.73	1326.78	27.72	44.25	1707.10	0.66	6.647
24	3687.79	725.89	54.44	659.82	1326.78	11.63	44.25	1691.00	0.66	6.585
25	3687.79	725.89	54.44	676.32	1326.78	-4.87	44.25	1684.24	0.66	6.558
26	3687.79	725.89	54.44	693.23	1326.78	-21.77	44.25	1701.15	0.66	6.624
27	3687.79	725.89	54.44	710.56	1326.78	-39.10	44.25	1718.48	0.66	6.692
28	3687.79	725.89	54.44	728.32	1326.78	-56.87	44.25	1736.24	0.66	6.761
29	3687.79	725.89	54.44	746.53	1326.78	-75.08	44.25	1754.45	0.66	6.832
30	3687.79	725.89	54.44	765.19	1326.78	-93.74	44.25	1773.11	0.66	6.905

Source : Previous tables
Factors explained in text.

BEST AVAILABLE DOCUMENT

553

Table 9.13.3

AGRICULTURAL PRODUCTION TO BE HAULED AND SAVINGS FROM NEW ROADS,

DEPALPUR SYSTEM

(Valume 000 t)

YEAR	TOTAL AGRICULTURAL PRODUCTION	TOTAL CEREALS Prod.	REDUCTIONS: SEED,FEED LOSS @7.5% CEREALS	REDUCTIONS: CONSUMPTION @0.2t per cap.	REDUCTIONS: SUGAR CANE NOT HAULED 36%	CEREALS BALANCE HAULD IN(-) or OUT (+)	INCREASE INPUTS @ 1.2% OF Prod.	Net Tonnage for Hauling	OFF ROAD DISTANCE SAVED 1.29 Km	TOTAL SAVING @ 5.9/t/km Rupees in Million
0	1618.84	564.14	42.31	268.80	369.27	253.03	19.43	957.89	0.00	0.000
1	1625.20	569.83	42.74	277.13	369.78	249.96	19.50	955.06	0.00	0.000
2	1634.37	576.55	43.24	285.72	370.91	247.59	19.61	954.11	0.19	1.089
3	1651.00	585.98	43.95	294.58	373.71	247.45	19.81	958.57	0.45	2.553
4	1677.91	599.18	44.94	303.71	378.81	250.53	20.13	970.59	0.77	4.432
5	1714.18	615.83	46.19	313.13	385.98	256.52	20.57	989.45	1.10	6.401
6	1750.47	632.59	47.44	322.84	393.15	262.31	21.01	1008.05	1.29	7.672
7	1775.57	645.35	48.40	332.84	397.79	264.10	21.31	1017.84	1.29	7.747
8	1800.69	658.17	49.36	343.16	402.43	265.64	21.61	1027.35	1.29	7.819
9	1825.83	671.06	50.33	353.80	407.06	266.93	21.91	1036.55	1.29	7.889
10	1850.98	684.02	51.30	364.77	411.68	267.95	22.21	1045.45	1.29	7.957
11	1875.47	697.06	52.28	376.08	416.04	268.71	22.51	1053.58	1.29	8.019
12	1899.58	710.17	53.26	387.73	420.39	269.18	22.80	1061.39	1.29	8.078
13	1924.50	723.35	54.25	399.75	424.73	269.35	23.09	1068.86	1.29	8.135
14	1949.04	736.59	55.24	412.15	429.07	269.20	23.39	1075.97	1.29	8.189
15	1973.60	749.90	56.24	424.92	433.40	268.74	23.68	1082.72	1.29	8.241
16	1998.17	763.28	57.25	438.09	437.71	267.94	23.98	1089.10	1.29	8.289
17	2022.76	776.72	58.25	451.68	442.02	266.79	24.27	1095.09	1.29	8.335
18	2047.37	790.23	59.27	465.68	446.32	265.28	24.57	1100.68	1.29	8.377
19	2072.00	803.80	60.29	480.11	450.61	263.40	24.86	1105.85	1.29	8.417
20	2096.64	817.44	61.31	495.00	454.90	261.13	25.16	1110.60	1.29	8.453
21	2096.64	817.44	61.31	510.34	454.90	245.79	25.16	1095.25	1.29	8.336
22	2096.64	817.44	61.31	526.16	454.90	229.97	25.16	1079.43	1.29	8.216
23	2096.64	817.44	61.31	542.47	454.90	213.66	25.16	1063.12	1.29	8.091
24	2096.64	817.44	61.31	559.29	454.90	196.84	25.16	1046.31	1.29	7.963
25	2096.64	817.44	61.31	576.63	454.90	179.50	25.16	1028.97	1.29	7.831
26	2096.64	817.44	61.31	594.50	454.90	161.63	25.16	1011.09	1.29	7.695
27	2096.64	817.44	61.31	612.93	454.90	143.20	25.16	992.66	1.29	7.555
28	2096.64	817.44	61.31	631.93	454.90	124.20	25.16	973.66	1.29	7.411
29	2096.64	817.44	61.31	651.52	454.90	104.61	25.16	954.07	1.29	7.261
30	2096.64	817.44	61.31	671.72	454.90	84.41	25.16	933.87	1.29	7.108

Source : Previous tables
Factors explained in text.

BEST AVAILABLE DOCUMENT

554

Table 9.13.4

AGRICULTURAL PRODUCTION TO BE HAULED AND SAVINGS FROM NEW ROADS,

MAILSI SYSTEM

(Values 000 t)

YEAR	TOTAL AGRICULTURAL PRODUCTION	TOTAL CEREALS Prod.	REDUCTIONS: SEED,FEED LOSS @7.5% CEREALS	REDUCTIONS: CONSUMPTION @0.2t per cap.	REDUCTIONS: SUGAR CANE NOT HAULED 91%	CEREALS BALANCE HAULD IN(-) or OUT (+)	INCREASE INPUTS @ 1.2% OF Prod.	Net Tonnage for Hauling	OFF ROAD DISTANCE SAVED 0.66 Km	TOTAL SAVING @ 5.9/t/km Rupees in Million
0	1598.28	427.07	32.03	225.40	769.41	169.64	19.18	590.62	0.00	0.000
1	1588.56	432.32	32.42	232.16	752.45	167.74	19.06	590.59	0.00	0.000
2	1580.85	438.17	32.86	239.13	736.36	166.18	18.97	591.47	0.10	0.345
3	1578.46	445.59	33.42	246.30	722.59	165.87	18.94	595.09	0.23	0.811
4	1583.22	455.20	34.14	253.69	711.83	167.37	19.00	602.56	0.40	1.408
5	1594.20	466.79	35.01	261.30	703.55	170.48	19.13	613.47	0.56	2.031
6	1604.61	478.35	35.88	269.14	694.71	173.33	19.26	624.14	0.66	2.430
7	1606.67	487.48	36.56	277.21	682.05	173.70	19.28	630.13	0.66	2.454
8	1608.35	496.58	37.24	285.53	669.02	173.81	19.30	635.85	0.66	2.476
9	1609.64	505.66	37.92	294.10	655.62	173.64	19.32	641.31	0.66	2.497
10	1610.55	514.72	38.60	302.92	641.85	173.20	19.33	646.50	0.66	2.517
11	1603.31	521.50	39.11	312.01	624.44	170.38	19.24	647.00	0.66	2.519
12	1595.91	528.26	39.62	321.37	606.86	167.28	19.15	647.21	0.66	2.520
13	1588.33	535.00	40.13	331.01	589.12	163.87	19.06	647.14	0.66	2.520
14	1580.59	541.72	40.63	340.94	571.22	160.15	18.97	646.77	0.66	2.519
15	1572.68	548.41	41.13	351.17	553.16	156.11	18.87	646.10	0.66	2.516
16	1564.61	555.08	41.63	361.70	534.94	151.75	18.78	645.11	0.66	2.512
17	1556.36	561.73	42.13	372.55	516.56	147.05	18.68	643.80	0.66	2.507
18	1547.95	568.35	42.63	383.73	498.02	142.00	18.58	642.15	0.66	2.501
19	1539.37	574.96	43.12	395.24	479.32	136.59	18.47	640.16	0.66	2.493
20	1530.62	581.54	43.62	407.10	460.46	130.82	18.37	637.81	0.66	2.484
21	1530.62	581.54	43.62	419.31	460.46	118.61	18.37	625.60	0.66	2.436
22	1530.62	581.54	43.62	431.89	460.46	106.03	18.37	613.02	0.66	2.387
23	1530.62	581.54	43.62	444.85	460.46	93.08	18.37	600.06	0.66	2.337
24	1530.62	581.54	43.62	458.19	460.46	79.73	18.37	586.72	0.66	2.285
25	1530.62	581.54	43.62	471.94	460.46	65.98	18.37	572.97	0.66	2.231
26	1530.62	581.54	43.62	486.10	460.46	51.83	18.37	558.81	0.66	2.176
27	1530.62	581.54	43.62	500.68	460.46	37.24	18.37	544.23	0.66	2.119
28	1530.62	581.54	43.62	515.70	460.46	22.22	18.37	529.21	0.66	2.061
29	1530.62	581.54	43.62	531.17	460.46	6.75	18.37	513.74	0.66	2.001
30	1530.62	581.54	43.62	547.10	460.46	-9.18	18.37	516.17	0.66	2.010

Source : Previous tables
Factors explained in text.

BEST AVAILABLE DOCUMENT

Table 9.13.5

AGRICULTURAL PRODUCTION TO BE HAULED AND SAVINGS FROM NEW ROADS,

NASIR SYSTEM

(Volume 000 t)

YEAR	TOTAL AGRICULTURAL PRODUCTION	TOTAL CEREALS Prod.	REDUCTIONS: SEED,FEED LOSS @7.5% CEREALS	REDUCTIONS: CONSUMPTION @0.2t per cap.	REDUCTIONS: SUGAR CANE NOT HAULED 5%	CEREALS BALANCE HAULD IN(-) or OUT (+)	INCREASE INPUTS @ 1.2% OF Prod.	Net Tonnage for Hauling	OFF ROAD DISTANCE SAVED 0.91 Km	TOTAL SAVING @ 3.8/t/km Rupees in Million
0	587.14	44.70	3.35	36.40	48.06	4.95	7.05	506.37	0.00	0.000
1	599.33	44.79	3.36	37.64	49.14	3.79	7.19	516.38	0.00	0.000
2	613.10	44.99	3.37	38.92	50.36	2.70	7.36	527.81	0.14	0.274
3	631.18	45.51	3.41	40.24	51.93	1.85	7.57	543.17	0.32	0.657
4	655.40	46.44	3.48	41.61	54.00	1.35	7.86	564.17	0.55	1.171
5	685.50	47.75	3.58	43.02	56.57	1.15	8.23	590.55	0.77	1.736
6	716.20	49.03	3.68	44.49	59.20	0.87	8.59	617.44	0.91	2.135
7	740.72	49.83	3.74	46.00	61.32	0.10	8.89	638.56	0.91	2.208
8	765.63	50.61	3.80	47.56	63.48	-0.75	9.19	661.47	0.91	2.287
9	790.92	51.38	3.85	49.18	65.67	-1.66	9.49	685.02	0.91	2.369
10	816.59	52.12	3.91	50.85	67.91	-2.64	9.80	709.00	0.91	2.452
11	838.25	52.64	3.95	52.58	69.80	-3.89	10.06	729.75	0.91	2.523
12	860.15	53.15	3.99	54.37	71.73	-5.21	10.32	750.81	0.91	2.596
13	882.30	53.64	4.02	56.22	73.67	-6.60	10.59	772.18	0.91	2.670
14	904.69	54.12	4.06	58.13	75.64	-8.07	10.86	793.86	0.91	2.745
15	927.33	54.58	4.09	60.10	77.63	-9.62	11.13	815.86	0.91	2.821
16	950.21	55.03	4.13	62.15	79.65	-11.24	11.40	838.17	0.91	2.898
17	973.34	55.47	4.16	64.26	81.70	-12.95	11.68	860.81	0.91	2.977
18	996.71	55.89	4.19	66.45	83.77	-14.75	11.96	883.77	0.91	3.056
19	1020.33	56.29	4.22	68.71	85.86	-16.63	12.24	907.05	0.91	3.137
20	1044.19	56.69	4.25	71.04	87.98	-18.61	12.53	930.66	0.91	3.218
21	1044.19	56.69	4.25	73.46	87.98	-21.02	12.53	933.08	0.91	3.227
22	1044.19	56.69	4.25	75.95	87.98	-23.52	12.53	935.57	0.91	3.235
23	1044.19	56.69	4.25	78.54	87.98	-26.10	12.53	938.16	0.91	3.244
24	1044.19	56.69	4.25	81.21	87.98	-28.77	12.53	940.83	0.91	3.253
25	1044.19	56.69	4.25	83.97	87.98	-31.53	12.53	943.59	0.91	3.263
26	1044.19	56.69	4.25	86.82	87.98	-34.39	12.53	946.44	0.91	3.273
27	1044.19	56.69	4.25	89.78	87.98	-37.34	12.53	949.39	0.91	3.283
28	1044.19	56.69	4.25	92.83	87.98	-40.39	12.53	952.45	0.91	3.294
29	1044.19	56.69	4.25	95.98	87.98	-43.55	12.53	955.60	0.91	3.304
30	1044.19	56.69	4.25	99.25	87.98	-46.81	12.53	958.87	0.91	3.316

Source : Previous tables
Factors explained in text.

BEST AVAILABLE DOCUMENT

556

Table 9.13.6

AGRICULTURAL PRODUCTION TO BE HAULED AND SAVINGS FROM NEW ROADS,

JAMRAO & MITHRAO SYSTEM

(Volume 000 t)

YEAR	TOTAL AGRICULTURAL PRODUCTION	TOTAL CEREALS Prod.	REDUCTIONS: SEED,FEED LOSS @7.5% CEREALS	REDUCTIONS: CONSUMPTION @0.2t per cap.	REDUCTIONS: SUGAR CANE NOT HAULED 73%	CEREALS BALANCE HAULD IN(-) or OUT (+)	INCREASE INPUTS @ 1.2% OF Prod.	Net Tonnage for Hauling	OFF ROAD DISTANCE SAVED 8.16 Km	TOTAL SAVING @ 3.8/t/km Rupees in Million
0	146.05	55.19	4.14	49.80	50.26	1.25	1.75	43.61	0.00	0.000
1	147.50	55.68	4.18	51.54	50.86	-0.04	1.77	42.77	0.00	0.000
2	149.33	56.32	4.22	53.35	51.59	-1.25	1.79	44.46	1.22	0.207
3	152.22	57.36	4.30	55.21	52.69	-2.16	1.83	46.16	2.86	0.501
4	156.55	58.94	4.42	57.15	54.29	-2.63	1.88	47.83	4.90	0.890
5	162.22	61.02	4.58	59.15	56.35	-2.70	1.95	49.49	6.94	1.304
6	167.93	63.12	4.73	61.22	58.45	-2.83	2.02	51.20	8.16	1.588
7	172.09	64.64	4.85	63.36	60.02	-3.57	2.07	53.06	8.16	1.645
8	176.28	66.17	4.96	65.58	61.61	-4.37	2.12	54.99	8.16	1.705
9	180.49	67.70	5.08	67.87	63.22	-5.25	2.17	56.98	8.16	1.767
10	184.73	69.25	5.19	70.25	64.84	-6.19	2.22	59.05	8.16	1.831
11	188.11	70.48	5.27	72.71	66.15	-7.51	2.26	61.26	8.16	1.900
12	191.52	71.72	5.38	75.25	67.47	-8.91	2.30	63.55	8.16	1.971
13	194.94	72.96	5.47	77.89	68.80	-10.40	2.34	65.92	8.16	2.044
14	198.38	74.21	5.57	80.61	70.14	-11.97	2.38	68.37	8.16	2.120
15	201.84	75.47	5.66	83.43	71.50	-13.62	2.42	70.91	8.16	2.199
16	205.31	76.74	5.76	86.35	72.87	-15.37	2.46	73.54	8.16	2.280
17	208.80	78.01	5.85	89.37	74.25	-17.22	2.51	76.26	8.16	2.365
18	212.31	79.29	5.95	92.50	75.65	-19.16	2.55	79.08	8.16	2.452
19	215.83	80.58	6.04	95.74	77.06	-21.20	2.59	81.99	8.16	2.542
20	219.38	81.88	6.14	99.09	78.47	-23.36	2.63	85.01	8.16	2.636
21	219.38	81.88	6.14	102.56	78.47	-26.83	2.63	88.48	8.16	2.744
22	219.38	81.88	6.14	106.15	78.47	-30.41	2.63	92.07	8.16	2.855
23	219.38	81.88	6.14	109.86	78.47	-34.13	2.63	95.79	8.16	2.970
24	219.38	81.88	6.14	113.71	78.47	-37.98	2.63	99.63	8.16	3.089
25	219.38	81.88	6.14	117.69	78.47	-41.96	2.63	103.61	8.16	3.213
26	219.38	81.88	6.14	121.81	78.47	-46.07	2.63	107.73	8.16	3.341
27	219.38	81.88	6.14	126.07	78.47	-50.34	2.63	112.00	8.16	3.473
28	219.38	81.88	6.14	130.48	78.47	-54.75	2.63	116.41	8.16	3.610
29	219.38	81.88	6.14	135.05	78.47	-59.32	2.63	120.97	8.16	3.751
30	219.38	81.88	6.14	139.78	78.47	-64.04	2.63	125.70	8.16	3.898

Source : Previous tables
Factors explained in text.

BEST AVAILABLE DOCUMENT

Table 9.13.7

AGRICULTURAL PRODUCTION TO BE HAULED AND SAVINGS FROM NEW ROADS,

GOTKI SYSTEM

(Volume 000 t)

YEAR	TOTAL AGRICULTURAL PRODUCTION	TOTAL CEREALS Prod.	REDUCTIONS: SEED,FEED LOSS @7.5% CEREALS	REDUCTIONS: CONSUMPTION @0.2t per cap.	REDUCTIONS: SUGAR CANE NOT HAULED 68%	CEREALS BALANCE HAULD IN(-) or OUT (+)	INCREASE INPUTS @ 1.2% OF Prod.	Net Tonnage for Hauling	OFF ROAD DISTANCE SAVED 0.68 Km	TOTAL SAVING @ 3.8/t/k Rupees in Million
0	751.53	184.84	13.86	119.20	341.46	51.78	9.02	286.02	0.00	0.000
1	754.37	186.30	13.97	122.78	341.94	49.55	9.05	284.74	0.00	0.000
2	758.50	188.09	14.11	126.46	342.97	47.52	9.10	284.06	0.10	0.110
3	766.03	190.76	14.31	130.25	345.49	46.20	9.19	285.17	0.24	0.258
4	778.25	194.67	14.60	134.16	350.05	45.91	9.34	288.77	0.41	0.448
5	794.72	199.69	14.98	138.19	356.47	46.52	9.54	294.62	0.58	0.647
6	811.18	204.70	15.35	142.33	362.88	47.02	9.73	300.34	0.68	0.776
7	822.51	208.37	15.63	146.60	367.06	46.14	9.87	303.09	0.68	0.783
8	833.83	212.04	15.90	151.00	371.24	45.14	10.01	305.70	0.68	0.790
9	845.15	215.70	16.18	155.53	375.41	44.00	10.14	308.18	0.68	0.796
10	856.46	219.36	16.45	160.19	379.58	42.72	10.28	310.51	0.68	0.802
11	867.76	223.02	16.73	165.00	383.74	41.29	10.41	312.70	0.68	0.808
12	879.05	226.68	17.00	169.95	387.90	39.72	10.55	314.75	0.68	0.813
13	890.33	230.33	17.27	175.05	392.06	38.00	10.68	316.63	0.68	0.818
14	901.60	233.97	17.55	180.30	396.21	36.12	10.82	318.36	0.68	0.823
15	912.87	237.62	17.82	185.71	400.36	34.08	10.95	319.93	0.68	0.827
16	924.12	241.26	18.09	191.28	404.51	31.88	11.09	321.33	0.68	0.830
17	935.37	244.89	18.37	197.02	408.65	29.51	11.22	322.56	0.68	0.833
18	946.61	248.52	18.64	202.93	412.79	26.96	11.36	323.61	0.68	0.836
19	957.84	252.15	18.91	209.02	416.92	24.22	11.49	324.48	0.68	0.838
20	969.06	255.78	19.18	215.29	421.06	21.31	11.63	325.16	0.68	0.840
21	969.06	255.78	19.18	221.75	421.06	14.85	11.63	318.70	0.68	0.824
22	969.06	255.78	19.18	228.40	421.06	8.20	11.63	312.05	0.68	0.806
23	969.06	255.78	19.18	235.25	421.06	1.34	11.63	305.20	0.68	0.789
24	969.06	255.78	19.18	242.31	421.06	-5.71	11.63	309.57	0.68	0.800
25	969.06	255.78	19.18	249.58	421.06	-12.98	11.63	316.83	0.68	0.819
26	969.06	255.78	19.18	257.07	421.06	-20.47	11.63	324.32	0.68	0.838
27	969.06	255.78	19.18	264.78	421.06	-28.18	11.63	332.03	0.68	0.858
28	969.06	255.78	19.18	272.72	421.06	-36.12	11.63	339.98	0.68	0.879
29	969.06	255.78	19.18	280.90	421.06	-44.31	11.63	348.16	0.68	0.900
30	969.06	255.78	19.18	289.33	421.06	-52.73	11.63	356.59	0.68	0.921

Source : Previous tables
Factors explFactors explained in text.

BEST AVAILABLE DOCUMENT

558

Table 9.13.8

AGRICULTURAL PRODUCTION TO BE HAULED AND SAVINGS FROM NEW ROADS,

ROHRI SYSTEM

(Volume 000 t)

YEAR	TOTAL AGRICULTURAL PRODUCTION	TOTAL CEREALS Prod.	REDUCTIONS: SEED,FEED LOSS @7.5% CEREALS	REDUCTIONS: CONSUMPTION @0.2t per cap.	REDUCTIONS: SUGAR CANE NOT HAULED 77%	CEREALS BALANCE HAULD IN(-) or OUT (+)	INCREASE INPUTS @ 1.2% OF Prod.	Net Tonnage for Hauling	OFF ROAD DISTANCE SAVED 2.52 Km	TOTAL SAVING @ 3.8/t/k Rupees in Million
0	135.49	45.46	3.41	35.20	54.72	6.85	1.63	43.79	0.00	0.000
1	136.69	46.23	3.47	36.15	54.9[illegible]	6.61	1.64	43.81	0.00	0.000
2	138.15	47.09	3.53	37.13	55.19	6.43	1.66	43.96	0.38	0.063
3	140.27	48.20	3.62	38.13	55.72	6.46	1.68	44.49	0.88	0.149
4	143.32	49.66	3.72	39.16	56.59	6.78	1.72	45.57	1.51	0.262
5	147.20	51.44	3.86	40.22	57.76	7.37	1.77	47.13	2.14	0.384
6	151.09	53.23	3.99	41.30	58.94	7.93	1.81	48.67	2.52	0.466
7	153.98	54.65	4.10	42.42	59.74	8.13	1.85	49.57	2.52	0.475
8	156.87	56.07	4.21	43.56	60.55	8.30	1.88	50.44	2.52	0.483
9	159.77	57.50	4.31	44.74	61.36	8.45	1.92	51.28	2.52	0.491
10	162.66	58.93	4.42	45.95	62.16	8.57	1.95	52.09	2.52	0.499
11	165.56	60.38	4.53	47.19	62.97	8.66	1.99	52.87	2.52	0.506
12	168.47	61.82	4.64	48.46	63.77	8.73	2.02	53.62	2.52	0.513
13	171.38	63.28	4.75	49.77	64.58	8.76	2.06	54.34	2.52	0.520
14	174.29	64.74	4.86	51.11	65.39	8.77	2.09	55.02	2.52	0.527
15	177.20	66.20	4.97	52.49	66.19	8.74	2.13	55.68	2.52	0.533
16	180.12	67.67	5.08	53.91	67.00	8.69	2.16	56.30	2.52	0.539
17	183.04	69.15	5.19	55.37	67.81	8.60	2.20	56.88	2.52	0.545
18	185.96	70.64	5.30	56.86	68.61	8.48	2.23	57.43	2.52	0.550
19	188.89	72.12	5.41	58.40	69.42	8.32	2.27	57.93	2.52	0.555
20	191.82	73.62	5.52	59.97	70.22	8.13	2.30	58.40	2.52	0.559
21	191.82	73.62	5.52	61.59	70.22	6.51	2.30	56.78	2.52	0.544
22	191.82	73.62	5.52	63.25	70.22	4.84	2.30	55.12	2.52	0.528
23	191.82	73.62	5.52	64.96	70.22	3.14	2.30	53.41	2.52	0.511
24	191.82	73.62	5.52	66.72	70.22	1.38	2.30	51.66	2.52	0.495
25	191.82	73.62	5.52	68.52	70.22	-0.42	2.30	50.70	2.52	0.485
26	191.82	73.62	5.52	70.37	70.22	-2.27	2.30	52.55	2.52	0.503
27	191.82	73.62	5.52	72.27	70.22	-4.17	2.30	54.45	2.52	0.521
28	191.82	73.62	5.52	74.22	70.22	-6.12	2.30	56.40	2.52	0.540
29	191.82	73.62	5.52	76.22	70.22	-8.12	2.30	58.40	2.52	0.559
30	191.82	73.62	5.52	78.28	70.22	-10.18	2.30	60.46	2.52	0.579

Source : Previous tables
Factors explained in text.

BEST AVAILABLE DOCUMENT

559

Table 9.13.9

AGRICULTURAL PRODUCTION TO BE HAULED AND SAVINGS FROM NEW ROADS,

DADU SYSTEM

(olume 000 t)

YEAR	TOTAL AGRICULTURAL PRODUCTION	TOTAL CEREALS Prod.	REDUCTIONS: SEED,FEED LOSS @7.5% CEREALS	REDUCTIONS: CONSUMPTION @0.2t per cap.	REDUCTIONS: SUGAR CANE NOT HAULED 27%	CEREALS BALANCE HAULD IN(-) or OUT (+)	INCREASE INPUTS @ 1.2% OF Prod.	Net Tonnage for Hauling	OFF ROAD DISTANCE SAVED 2.49 Km	TOTAL SAVING @ 3.8/t/k Rupees in Million
0	61.41	38.11	2.86	26.40	6.09	8.85	0.74	26.79	0.00	0.000
1	62.82	38.64	2.90	27.24	6.32	8.50	0.75	27.10	0.00	0.000
2	64.35	39.25	2.94	28.12	6.57	8.19	0.77	27.49	0.37	0.039
3	66.21	40.06	3.00	29.02	6.85	8.03	0.79	28.14	0.87	0.093
4	68.52	41.13	3.09	29.94	7.17	8.10	0.82	29.15	1.49	0.165
5	71.27	42.46	3.18	30.90	7.54	8.38	0.86	30.50	2.12	0.245
6	74.07	43.81	3.29	31.89	7.93	8.63	0.89	31.86	2.49	0.301
7	76.43	44.87	3.37	32.91	8.27	8.59	0.92	32.80	2.49	0.310
8	78.81	45.94	3.45	33.97	8.61	8.53	0.95	33.73	2.49	0.319
9	81.23	47.02	3.53	35.05	8.97	8.44	0.97	34.66	2.49	0.328
10	83.69	48.11	3.61	36.17	9.33	8.33	1.00	35.58	2.49	0.337
11	86.18	49.21	3.69	37.33	9.69	8.19	1.03	36.49	2.49	0.345
12	88.70	50.32	3.77	38.53	10.07	8.02	1.06	37.40	2.49	0.354
13	91.22	51.44	3.86	39.76	10.45	7.82	1.10	38.29	2.49	0.362
14	93.85	52.56	3.94	41.03	10.83	7.59	1.13	39.17	2.49	0.371
15	96.47	53.70	4.03	42.34	11.22	7.33	1.16	40.03	2.49	0.379
16	99.13	54.84	4.11	43.70	11.62	7.03	1.19	40.88	2.49	0.387
17	101.82	56.00	4.20	45.10	12.03	6.70	1.22	41.72	2.49	0.395
18	104.55	57.16	4.29	46.54	12.44	6.33	1.25	42.53	2.49	0.402
19	107.31	58.34	4.38	48.03	12.86	5.93	1.29	43.33	2.49	0.410
20	110.10	59.52	4.46	49.57	13.28	5.49	1.32	44.11	2.49	0.417
21	110.10	59.52	4.46	51.15	13.28	3.90	1.32	42.52	2.49	0.402
22	110.10	59.52	4.46	52.79	13.28	2.27	1.32	40.88	2.49	0.387
23	110.10	59.52	4.46	54.48	13.28	0.58	1.32	39.19	2.49	0.371
24	110.10	59.52	4.46	56.22	13.28	-1.17	1.32	39.78	2.49	0.376
25	110.10	59.52	4.46	58.02	13.28	-2.97	1.32	41.58	2.49	0.393
26	110.10	59.52	4.46	59.88	13.28	-4.82	1.32	43.44	2.49	0.411
27	110.10	59.52	4.46	61.80	13.28	-6.74	1.32	45.36	2.49	0.429
28	110.10	59.52	4.46	63.77	13.28	-8.72	1.32	47.33	2.49	0.448
29	110.10	59.52	4.46	65.81	13.28	-10.76	1.32	49.37	2.49	0.467
30	110.10	59.52	4.46	67.92	13.28	-12.86	1.32	51.48	2.49	0.487

Source : Previous tables
Factors explained in text.

BEST AVAILABLE DOCUMENT

Table 9.13.10

AGRICULTURAL PRODUCTION TO BE HAULED AND SAVINGS FROM NEW ROADS,

KABUL SYSTEM

(Volume 000 t)

YEAR	TOTAL AGRICULTURAL PRODUCTION	TOTAL CEREALS Prod.	REDUCTIONS: SEED,FEED LOSS @7.5% CEREALS	REDUCTIONS: CONSUMPTION @0.2t per cap.	REDUCTIONS: SUGAR CANE NOT HAULED 55%	CEREALS BALANCE HAULD IN(-) or OUT (+)	INCREASE INPUTS @ 1.2% OF Prod.	Net Tonnage for Hauling	OFF ROAD DISTANCE SAVED 0.18 Km	TOTAL SAVING @ 4.5/t/km Rupees in Million
0	525.51	52.86	3.96	83.40	259.96	-34.51	6.31	253.51	0.00	0.000
1	525.54	53.40	4.00	85.23	259.68	-35.84	6.31	254.61	0.00	0.000
2	526.43	54.04	4.05	87.11	259.81	-37.12	6.32	256.01	0.03	0.031
3	529.60	54.95	4.12	89.03	261.06	-38.20	6.36	258.14	0.06	0.073
4	535.89	56.23	4.22	90.98	263.82	-38.98	6.43	261.26	0.11	0.127
5	545.01	57.84	4.34	92.99	267.94	-39.49	6.54	265.25	0.15	0.183
6	554.09	59.45	4.46	95.03	272.05	-40.04	6.65	269.28	0.18	0.218
7	559.72	60.66	4.55	97.12	274.49	-41.01	6.72	272.31	0.18	0.221
8	565.34	61.87	4.64	99.26	276.91	-42.03	6.78	275.37	0.18	0.223
9	570.93	63.08	4.73	101.44	279.32	-43.09	6.85	278.47	0.18	0.226
10	576.49	64.29	4.82	103.68	281.71	-44.20	6.92	281.61	0.18	0.228
11	582.04	65.51	4.91	105.96	284.09	-45.36	6.98	284.79	0.18	0.231
12	587.56	66.72	5.00	108.29	286.46	-46.57	7.05	288.00	0.18	0.233
13	593.05	67.93	5.10	110.67	288.81	-47.83	7.12	291.25	0.18	0.236
14	598.52	69.15	5.19	113.10	291.15	-49.14	7.18	294.54	0.18	0.239
15	603.97	70.36	5.28	115.59	293.48	-50.51	7.25	297.88	0.18	0.241
16	609.39	71.58	5.37	118.14	295.80	-51.93	7.31	301.26	0.18	0.244
17	614.79	72.79	5.46	120.73	298.10	-53.40	7.38	304.68	0.18	0.247
18	620.16	74.01	5.55	123.39	300.39	-54.93	7.44	308.15	0.18	0.250
19	625.51	75.22	5.64	126.11	302.66	-56.52	7.51	311.66	0.18	0.252
20	630.84	76.44	5.73	128.88	304.92	-58.17	7.57	315.22	0.18	0.255
21	630.84	76.44	5.73	131.71	304.92	-61.01	7.57	318.06	0.18	0.258
22	630.84	76.44	5.73	134.61	304.92	-63.91	7.57	320.96	0.18	0.260
23	630.84	76.44	5.73	137.57	304.92	-66.87	7.57	323.92	0.18	0.262
24	630.84	76.44	5.73	140.60	304.92	-69.89	7.57	326.94	0.18	0.265
25	630.84	76.44	5.73	143.69	304.92	-72.99	7.57	330.04	0.18	0.267
26	630.84	76.44	5.73	146.86	304.92	-76.15	7.57	333.20	0.18	0.270
27	630.84	76.44	5.73	150.09	304.92	-79.38	7.57	336.43	0.18	0.273
28	630.84	76.44	5.73	153.39	304.92	-82.68	7.57	339.73	0.18	0.275
29	630.84	76.44	5.73	156.76	304.92	-86.06	7.57	343.11	0.18	0.278
30	630.84	76.44	5.73	160.21	304.92	-89.50	7.57	346.55	0.18	0.281

Source : Previous tables
Factors explained in text.

BEST AVAILABLE DOCUMENT

561

Table 9.13.11

AGRICULTURAL PRODUCTION TO BE HAULED AND SAVINGS FROM NEW ROADS,

PAHARPUR SYSTEM

(Volume 000 t)

YEAR	TOTAL AGRICULTURAL PRODUCTION	TOTAL CEREALS Prod.	REDUCTIONS: SEED,FEED LOSS @7.5% CEREALS	REDUCTIONS: CONSUMPTION @0.2t per cap.	REDUCTIONS: SUGAR CANE NOT HAULED 64%	CEREALS BALANCE HAULD IN(-) or OUT (+)	INCREASE INPUTS @ 1.2% OF Prod.	Net Tonnage for Hauling	OFF ROAD DISTANCE SAVED 1.52 Km	TOTAL SAVING @ 4.5/t/k Rupees in Million
0	24.20	13.52	1.01	17.40	6.84	-4.90	0.29	9.03	0.00	0.000
1	25.29	13.63	1.02	17.97	7.46	-5.36	0.30	9.87	0.00	0.000
2	26.53	13.81	1.04	18.57	8.14	-5.79	0.32	10.69	0.23	0.011
3	28.14	14.15	1.06	19.18	8.95	-6.09	0.34	11.46	0.53	0.027
4	30.27	14.72	1.10	19.81	9.95	-6.20	0.36	12.16	0.91	0.050
5	32.92	15.49	1.16	20.47	11.15	-6.14	0.40	12.81	1.29	0.074
6	35.67	16.26	1.22	21.14	12.43	-6.10	0.43	13.52	1.52	0.092
7	37.97	16.78	1.26	21.84	13.57	-6.32	0.46	14.41	1.52	0.099
8	40.34	17.29	1.30	22.56	14.75	-6.57	0.48	15.35	1.52	0.105
9	42.79	17.80	1.34	23.31	15.99	-6.84	0.51	16.35	1.52	0.112
10	45.30	18.31	1.37	24.07	17.28	-7.14	0.54	17.40	1.52	0.119
11	47.40	18.61	1.40	24.87	18.42	-7.65	0.57	18.58	1.52	0.127
12	49.54	18.91	1.42	25.69	19.60	-8.20	0.59	19.82	1.52	0.136
13	51.73	19.21	1.44	26.54	20.81	-8.77	0.62	21.10	1.52	0.144
14	53.98	19.51	1.46	27.41	22.06	-9.37	0.65	22.43	1.52	0.153
15	56.27	19.80	1.49	28.32	23.34	-10.00	0.68	23.81	1.52	0.163
16	58.62	20.10	1.51	29.25	24.65	-10.66	0.70	25.23	1.52	0.173
17	61.02	20.39	1.53	30.22	26.00	-11.36	0.73	26.71	1.52	0.183
18	63.46	20.68	1.55	31.21	27.38	-12.08	0.76	28.25	1.52	0.193
19	65.96	20.97	1.57	32.24	28.79	-12.84	0.79	29.83	1.52	0.204
20	68.51	21.26	1.59	33.31	30.24	-13.64	0.82	31.47	1.52	0.215
21	68.51	21.26	1.59	34.41	30.24	-14.74	0.82	32.57	1.52	0.223
22	68.51	21.26	1.59	35.54	30.24	-15.88	0.82	33.71	1.52	0.231
23	68.51	21.26	1.59	36.72	30.24	-17.05	0.82	34.88	1.52	0.239
24	68.51	21.26	1.59	37.93	30.24	-18.26	0.82	36.09	1.52	0.247
25	68.51	21.26	1.59	39.18	30.24	-19.51	0.82	37.34	1.52	0.255
26	68.51	21.26	1.59	40.47	30.24	-20.80	0.82	38.64	1.52	0.264
27	68.51	21.26	1.59	41.81	30.24	-22.14	0.82	39.97	1.52	0.273
28	68.51	21.26	1.59	43.19	30.24	-23.52	0.82	41.35	1.52	0.283
29	68.51	21.26	1.59	44.61	30.24	-24.94	0.82	42.78	1.52	0.293
30	68.51	21.26	1.59	46.08	30.24	-26.42	0.82	44.25	1.52	0.303

Source : Previous tables
Factors explained in text.

BEST AVAILABLE DOCUMENT

562

Table 9.13.12

AGRICULTURAL PRODUCTION TO BE HAULED AND SAVINGS FROM NEW ROADS,

MARWAT SYSTEM

(Volume 000 t)

YEAR	TOTAL AGRICULTURAL PRODUCTION	TOTAL CEREALS Prod.	REDUCTIONS: SEED,FEED LOSS @7.5% CEREALS	REDUCTIONS: CONSUMPTION @0.2t per cap.	REDUCTIONS: SUGAR CANE NOT HAULED 18%	CEREALS BALANCE HAULD IN(-) or OUT (+)	INCREASE INPUTS @ 1.2% OF Prod.	Net Tonnage for Hauling	OFF ROAD DISTANCE SAVED 0.42 Km	TOTAL SAVING @ 4.5/t/k Rupees in Million
0	180.84	125.40	9.41	150.20	9.93	-34.20	2.17	81.83	0.00	0.000
1	187.48	127.95	9.60	154.41	10.72	-36.05	2.25	87.11	0.00	0.000
2	195.10	131.13	9.83	158.73	11.51	-37.43	2.34	92.23	0.06	0.026
3	205.32	136.00	10.20	163.17	12.48	-37.37	2.46	96.68	0.15	0.064
4	219.19	143.18	10.74	167.74	13.68	-35.30	2.63	100.26	0.25	0.114
5	236.57	152.45	11.43	172.44	15.14	-31.43	2.84	103.24	0.36	0.166
6	254.33	161.69	12.13	177.27	16.68	-27.70	3.05	106.72	0.42	0.202
7	268.49	168.38	12.63	182.23	18.02	-26.48	3.22	111.79	0.42	0.211
8	282.91	175.06	13.13	187.33	19.41	-25.40	3.39	117.24	0.42	0.222
9	297.60	181.72	13.63	192.58	20.86	-24.49	3.57	123.09	0.42	0.233
10	312.55	188.35	14.13	197.97	22.36	-23.74	3.75	129.34	0.42	0.244
11	323.09	192.37	14.43	203.51	23.53	-25.57	3.88	136.63	0.42	0.258
12	333.73	196.38	14.73	209.21	24.72	-27.56	4.00	144.19	0.42	0.273
13	344.50	200.38	15.03	215.07	25.94	-29.72	4.13	152.03	0.42	0.287
14	355.38	204.37	15.33	221.09	27.18	-32.05	4.26	160.14	0.42	0.303
15	366.38	208.36	15.63	227.28	28.44	-34.55	4.40	168.53	0.42	0.319
16	377.50	212.33	15.92	233.65	29.73	-37.24	4.53	177.21	0.42	0.335
17	388.74	216.30	16.22	240.19	31.04	-40.11	4.66	186.17	0.42	0.352
18	400.09	220.26	16.52	246.91	32.37	-43.18	4.80	195.44	0.42	0.369
19	411.56	224.21	16.82	253.83	33.72	-46.43	4.94	205.00	0.42	0.387
20	423.15	228.15	17.11	260.93	35.10	-49.90	5.08	214.87	0.42	0.406
21	423.15	228.15	17.11	268.24	35.10	-57.20	5.08	222.18	0.42	0.420
22	423.15	228.15	17.11	275.75	35.10	-64.71	5.08	229.69	0.42	0.434
23	423.15	228.15	17.11	283.47	35.10	-72.43	5.08	237.41	0.42	0.449
24	423.15	228.15	17.11	291.41	35.10	-80.37	5.08	245.35	0.42	0.464
25	423.15	228.15	17.11	299.57	35.10	-88.53	5.08	253.51	0.42	0.479
26	423.15	228.15	17.11	307.96	35.10	-96.92	5.08	261.90	0.42	0.495
27	423.15	228.15	17.11	316.58	35.10	-105.54	5.08	270.52	0.42	0.511
28	423.15	228.15	17.11	325.44	35.10	-114.41	5.08	279.38	0.42	0.528
29	423.15	228.15	17.11	334.56	35.10	-123.52	5.08	288.50	0.42	0.545
30	423.15	228.15	17.11	343.92	35.10	-132.89	5.08	297.86	0.42	0.563

Source : Previous tables
Factors explained in text.

BEST AVAILABLE DOCUMENT

Table 9.13.13

AGRICULTURAL PRODUCTION TO BE HAULED AND SAVINGS FROM NEW ROADS,

UPPER SWAT SYSTEM

(Volume 000 t)

YEAR	TOTAL AGRICULTURAL PRODUCTION	TOTAL CEREALS Prod.	REDUCTIONS: SEED,FEED LOSS @7.5% CEREALS	REDUCTIONS: CONSUMPTION @0.2t per cap.	REDUCTIONS: SUGAR CANE NOT HAULED 9%	CEREALS BALANCE HAULD IN(-) or OUT (+)	INCREASE INPUTS @ 1.2% OF Prod.	Net Tonnage for Hauling	OFF ROAD DISTANCE SAVED 0.32 Km	TOTAL SAVING @ 4.5/t/k Rupees in Million
0	1560.08	455.98	34.20	401.00	99.37	20.79	18.72	1044.24	0.00	0.000
1	1605.52	470.20	35.26	412.23	102.18	22.71	19.27	1075.12	0.00	0.000
2	1654.88	485.50	36.41	423.77	105.24	25.32	19.86	1109.31	0.05	0.240
3	1714.26	503.82	37.79	435.64	108.94	30.40	20.57	1152.47	0.11	0.581
4	1787.50	526.32	39.47	447.83	113.51	39.01	21.45	1208.14	0.19	1.044
5	1873.60	552.59	41.44	460.37	118.89	50.77	22.48	1275.38	0.27	1.561
6	1960.45	578.75	43.41	473.26	124.35	62.08	23.53	1342.95	0.32	1.934
7	2033.18	600.16	45.01	486.51	126.97	68.64	24.40	1397.07	0.32	2.012
8	2106.48	621.47	46.61	500.14	133.65	74.72	25.28	1451.36	0.32	2.090
9	2180.37	642.68	48.20	514.14	138.39	80.34	26.16	1505.80	0.32	2.168
10	2254.84	663.79	49.78	528.54	143.19	85.46	27.06	1560.38	0.32	2.247
11	2329.89	684.79	51.36	543.34	148.06	90.10	27.96	1615.10	0.32	2.326
12	2405.52	705.70	52.93	558.55	152.98	94.22	28.87	1667.93	0.32	2.405
13	2481.73	726.50	54.49	574.19	157.97	97.83	29.78	1724.87	0.32	2.484
14	2558.53	747.21	56.04	590.27	163.02	100.90	30.70	1779.90	0.32	2.563
15	2635.90	767.81	57.59	606.79	168.13	103.43	31.63	1835.02	0.32	2.642
16	2713.85	788.31	59.12	623.78	173.30	105.40	32.57	1890.21	0.32	2.722
17	2792.39	808.71	60.65	641.25	178.53	106.81	33.51	1945.46	0.32	2.801
18	2871.50	829.02	62.18	659.20	183.82	107.63	34.46	2000.76	0.32	2.881
19	2951.20	849.22	63.69	677.66	189.18	107.86	35.41	2056.08	0.32	2.961
20	3031.48	869.32	65.20	696.64	194.59	107.48	36.38	2111.42	0.32	3.040
21	3031.48	869.32	65.20	716.14	194.59	87.97	36.38	2091.92	0.32	3.012
22	3031.48	869.32	65.20	736.20	194.59	67.92	36.38	2071.87	0.32	2.983
23	3031.48	869.32	65.20	756.81	194.59	47.31	36.38	2051.25	0.32	2.954
24	3031.48	869.32	65.20	778.00	194.59	26.12	36.38	2030.06	0.32	2.923
25	3031.48	869.32	65.20	799.78	194.59	4.33	36.38	2008.28	0.32	2.892
26	3031.48	869.32	65.20	822.18	194.59	-18.06	36.38	2022.00	0.32	2.912
27	3031.48	869.32	65.20	845.20	194.59	-41.08	36.38	2045.02	0.32	2.945
28	3031.48	869.32	65.20	868.86	194.59	-64.75	36.38	2068.69	0.32	2.979
29	3031.48	869.32	65.20	893.19	194.59	-89.07	36.38	2093.02	0.32	3.014
30	3031.48	869.32	65.20	918.20	194.59	-114.08	36.38	2118.03	0.32	3.050

Source : Previous tables
Factors explained in text.

BEST AVAILABLE DOCUMENT

564

Table 9.14

CANAL MAINTENANCE SAVINGS WITH ROAD CONSTRUCTION.

(Million Rs)

SYSTEMS	YEARS OF DEVELOPMENT					
	1	2	3	4	5	6-30
PUNJAB						
JHANG BRANCH	0.00	0.030	0.069	0.118	0.167	0.197
GOGERA BRANCH	0.00	0.020	0.046	0.078	0.111	0.130
DEPALPUR CANAL	0.00	0.057	0.132	0.227	0.321	0.378
MAILSI CANAL	0.00	0.019	0.045	0.077	0.110	0.129
SIND						
NASIR BRANCH	0.00	0.015	0.036	0.061	0.087	0.102
JAMRAO & MITHRAO	0.00	0.108	0.252	0.433	0.613	0.721
GOTKI FEEDER	0.00	0.069	0.160	0.274	0.388	0.457
ROHRI CANAL	0.00	0.022	0.052	0.089	0.126	0.148
DADU CANAL	0.00	0.029	0.068	0.117	0.166	0.195
NWFP						
KABUL RIVER CANAL	0.00	0.007	0.017	0.029	0.042	0.049
PHARPUR CANAL	0.00	0.000	0.000	0.000	0.000	0.000
MARWAT CANAL	0.00	0.004	0.009	0.016	0.023	0.027
UPPER SWAT CANAL	0.00	0.023	0.054	0.093	0.132	0.155

SOURCE : Consultants' Estimates.

BEST AVAILABLE DOCUMENT

565

Table No. 9.15
Number of Motor Vehicles 'On Road " by Types ,The Punjab
1972 to 1985
(As on 30th June)

Year	All Motor Vehicles	Motor Cars Jeeps and Wagons	Motor Cycles and Scooters	Trucks	Delivery Vans	Buses	Auto Rickshaws	Taxis	Others
1972	101183	32494	39869	11457	2219	6520	3278	4800	546
1973	109182	35048	43421	11221	2201	8029	3661	5274	327
1974	101038	28384	44412	9695	1057	8250	3194	5622	424
1975	119145	35366	54302	9613	1520	8010	2472	6297	1565
1976	130676	34427	62827	10732	2527	9390	3297	6863	613
1977	147149	37514	74111	10609	2678	9642	2853	7321	2421
1978	185562	43771	102219	11626	3043	9957	2238	9766	2942
1979	216557	51509	121295	10819	4067	10072	2562	11760	4473
1980	222867	54810	119504	10937	4334	11500	3747	11818	6227
1981	273910	62810	143077	10642	5130	11297	5603	13920	21431
1982	295764	70584	164127	11677	6369	10849	5642	15372	11144
1983	311407	73218	172066	13208	8184	13014	6285	14957	10511
1984	321762	75152	187251	13608	5506	13079	5938	14074	7154
1985	430734	101406	259649	14357	11656	13478	4350	13716	12122
Compound Growth Rate	11.79	9.15	15.84	1.75	13.26	5.74	2.20	8.41	26.93

Source : Punjab Development Statistics, 1985
Bureau of Statistics, Government of Punjab Lahore.

BEST AVAILABLE DOCUMENT

566

TABLE 9.16

ROADS MAINTAINED BY PUNJAB HIGHWAY DEPARTMENT

1972 to 1985

(Kilometers)

YEAR	TOTAL	HIGH TYPE	LOW TYPE (a)
1972	10644	10158	486
1973	10611	10294	317
1974	10915	10318	597
1975	11155	10571	584
1976	11046	10462	584
1977	11245	11070	175
1978	11520	11344	176
1979	11655	11480	175
1980	11768	11592	176
1981	12159	12029	130
1982	13718	13414	304
1983	15168	14697	471
1984	16427	16318	109
1985	17678	17560	118

a) Decline in low type roads is due to their conversion into high type roads.

Source : Punjab Development Statistics, 1985.

BEST AVAILABLE DOCUMENT

Table 9.17

Vehicle Operating Costs on Paved and Unpaved Roads

(Rs per 1000 k.m.)

	WITH PROJECT (Improved Road)			WITHOUT PROJECT (Shingle Road)		
ITEMS.	CAR	BUS	TRUCK	CAR	BUS	TRUCK
Fuel.	580.88	1312.58	1519.68	592.88	1222.01	1375.57
Engine oil	19.75	63.63	63.63	19.75	74.60	79.53
Tyre Wear	29.61	209.99	223.22	142.86	172.09	162.60
Depreciation	225.00	286.50	169.00	259.60	382.00	270.40
Interest	237.79	197.38	131.72	317.06	265.12	210.73
Maintenance						
Labour	32.13	242.96	224.95	91.58	356.37	340.48
Parts	14.80	212.30	180.37	346.05	940.20	854.52
Time Cost	612.48	1508.52	215.50	816.64	2007.58	340.27
Total	1752.44	4033.86	2728.07	2586.42	5418.97	3634.10
Vehicle Operating Cost/K.M.	1.75	4.03	2.73	2.59	5.42	3.63

Note : Values have been updated by an inflation factor of 6.5% /annum.

Source : Vehicle operating cost by National High Ways Board Ministry of Communications (Communication Division) Islamabad.

BEST AVAILABLE DOCUMENT

768

Table 9.18

Traffic Volume by type of Vehicle and by System

SYSTEM	TRAFFIC VOLUME (Number)							PERCENTAGE DISTRIBUTION OF MOTORISED TRAFFIC				
	ANIMAL DRIVEN	MOTOR CYCLES	MOTOR CAR	BUSES	TRUCKS	TRACTOR TROLLIES	TOTAL MOTORISED	MOTOR CYCLES	MOTOR CAR	BUSES	TRUCKS	TRACTOR TROLLIES
JHANG	124	278	330	212	520	151	1491	18.65	22.13	14.22	34.88	10.13
GOGERA	319	334	142	55	52	101	684	48.83	20.76	8.04	7.60	14.77
DEPALPUR	163	247	133	67	87	96	630	39.21	21.11	10.63	13.81	15.24
MAILSI	136	259	140	73	58	63	593	43.68	23.61	12.31	9.78	10.62
WASIR	130	170	104	17	121	50	462	36.80	22.51	3.68	26.19	10.82
JAMRAO & MITHRAO	155	80	150	22	15	35	302	26.49	49.67	7.28	4.97	11.59
GOTKI	165	145	103	15	35	62	360	40.28	28.61	4.17	9.72	17.22
ROHRI	200	210	165	35	65	85	560	37.50	29.46	6.25	11.61	15.18
DADU	210	85	210	18	84	60	457	18.60	45.95	3.94	18.38	13.13
KABUL	225	100	245	40	240	240	865	11.56	28.32	4.62	27.75	27.75
PAHARPUR	428	55	27	20	30	35	167	32.93	16.17	11.98	17.96	20.96
MARWAT	57	147	470	140	257	79	1093	13.45	43.00	12.81	23.51	7.23
UPPER SWAT	142	153	612	122	132	122	1141	13.41	53.64	10.69	11.57	10.69

SOURCE :Summary of Traffic data for Punjab Highways 1985.

Traffic Volume on Farm to Market Roads, Sind

Summary of Traffic data for NWFP Highways 1985.

P.C.I/Project Estimates of Shingling of Canal Patrol Road along K.R.C. RD 11000-133000 PID NWFP 1983

P.C.I. Proforma Shingling of Canal Patrol Road Along Paharpur Canal RD 0-129000. Irrigation and Public Health Engineering Department NWFP D.I.Khan 1983.

Supplemented with Field Observation of the Consultants.

BEST AVAILABLE COPY

569

Table No.9.19.1

Average Motorized Traffic Volume

(Vehicle Per day-Both Directions)

JHANG SYSTEM

DEVELOPMENT YEARS	MOTOR CYCLES	MOTOR CARS	PASSENGER BUSSES	TRUCKS	TRACTOR/ TRAILORS	TOTAL MOTORISED
0	37	44	29	70	20	200
1	40	45	30	74	21	210
2	43	47	32	77	22	221
3	47	48	34	81	23	232
4	50	50	35	85	24	245
5	54	51	37	89	26	257
6	59	53	39	94	27	271
7	63	54	41	98	28	285
8	68	56	43	103	30	300
9	74	57	45	109	31	316
10	80	59	47	114	33	333
11	86	61	50	120	34	351
12	93	63	52	126	36	370
13	101	65	55	132	38	390
14	109	67	57	139	40	411
15	117	69	60	146	42	433
16	127	71	63	153	44	457
17	137	73	66	160	46	482
18	148	75	70	168	48	509
19	160	77	73	177	51	538
20	172	79	77	186	53	567
21	172	79	77	186	53	567
22	172	79	77	186	53	567
23	172	79	77	186	53	567
24	172	79	77	186	53	567
25	172	79	77	186	53	567
26	172	79	77	186	53	567
27	172	79	77	186	53	567
28	172	79	77	186	53	567
29	172	79	77	186	53	567
30	172	79	77	186	53	567

570

Table No. 9.19.2

Average Motorized Traffic Volume

(Vehicle Per day-Both Directions)

GOGERA CANAL

DEVELOPMENT YEARS	MOTOR CYCLES	MOTOR CARS	PASSENGER BUSSES	TRUCKS	TRACTOR/ TRAILORS	TOTAL MOTORISED
0	98	42	16	15	29	200
1	106	43	17	16	30	212
2	114	45	18	17	32	225
3	123	46	19	17	34	239
4	133	47	19	18	35	254
5	144	49	20	19	37	269
6	156	50	21	20	39	286
7	168	52	23	21	41	304
8	181	53	24	22	43	323
9	196	55	25	23	45	344
10	212	56	26	24	47	366
11	229	58	27	26	50	389
12	247	60	29	27	52	414
13	267	62	30	28	55	441
14	288	64	32	30	57	470
15	311	65	33	31	60	501
16	336	67	35	33	63	534
17	363	69	37	34	66	570
18	392	72	39	36	70	608
19	423	74	40	38	73	648
20	457	76	42	40	77	692
21	457	76	42	40	77	692
22	457	76	42	40	77	692
23	457	76	42	40	77	692
24	457	76	42	40	77	692
25	457	76	42	40	77	692
26	457	76	42	40	77	692
27	457	76	42	40	77	692
28	457	76	42	40	77	692
29	457	76	42	40	77	692
30	457	76	42	40	77	692

571

Table No. 9.19.3

Average Motorized Traffic Volume

(Vehicle Per day-Both Directions)

DEPALPUR CANAL

DEVELOPMENT YEARS	MOTOR CYCLES	MOTOR CARS	PASSENGER BUSSES	TRUCKS	TRACTOR/ TRAILORS	TOTAL MOTORISED
0	78	42	21	28	31	200
1	84	43	22	29	33	212
2	91	45	23	31	34	224
3	98	46	24	32	36	237
4	106	47	26	34	38	251
5	115	49	27	36	40	265
6	124	50	28	38	42	281
7	134	52	30	39	44	298
8	144	53	31	41	46	316
9	156	55	33	43	48	335
10	168	56	34	46	50	355
11	182	58	36	48	53	377
12	196	60	38	50	56	400
13	212	62	40	53	58	425
14	229	64	42	55	61	451
15	247	65	44	58	64	479
16	267	67	46	61	68	509
17	289	69	48	64	71	541
18	312	72	51	67	75	576
19	337	74	53	71	78	612
20	364	76	56	74	82	652
21	364	76	56	74	82	652
22	364	76	56	74	82	652
23	364	76	56	74	82	652
24	364	76	56	74	82	652
25	364	76	56	74	82	652
26	364	76	56	74	82	652
27	364	76	56	74	82	652
28	364	76	56	74	82	652
29	364	76	56	74	82	652
30	364	76	56	74	82	652

572

Table No. 9.19.4

Average Motorized Traffic Volume

(Vehicle Per day-Both Directions)

MAILSI CANAL

DEVELOPMENT YEARS	MOTOR CYCLES	MOTOR CARS	PASSENGER BUSSES	TRUCKS	TRACTOR/ TRAILORS	TOTAL MOTORISED
0	87	47	25	20	21	200
1	94	48	26	21	22	212
2	101	50	28	22	23	224
3	110	51	29	23	24	237
4	118	53	30	24	26	251
5	128	54	32	26	27	267
6	138	56	34	27	28	283
7	149	58	35	28	30	300
8	161	60	37	30	31	318
9	174	61	39	31	33	338
10	188	63	41	33	34	358
11	203	65	43	34	36	381
12	219	67	45	36	38	405
13	237	69	47	38	40	430
14	256	71	49	40	42	457
15	276	73	52	42	44	486
16	298	75	55	44	46	518
17	322	78	57	46	48	551
18	348	80	60	48	51	587
19	375	82	63	51	53	625
20	406	85	66	53	56	666
21	406	85	66	53	56	666
22	406	85	66	53	56	666
23	406	85	66	53	56	666
24	406	85	66	53	56	666
25	406	85	66	53	56	666
26	406	85	66	53	56	666
27	406	85	66	53	56	666
28	406	85	66	53	56	666
29	406	85	66	53	56	666
30	406	85	66	53	56	666

573

Table No. 9.19.5

Average Motorized Traffic Volume

(Vehicle Per day-Both Directions)

NASIR BRANCH

DEVELOPMENT YEARS	MOTOR CYCLES	MOTOR CARS	PASSENGER BUSSES	TRUCKS	TRACTOR/ TRAILORS	TOTAL MOTORISED
0	74	45	7	52	22	200
1	80	46	7	55	23	211
2	86	48	8	57	24	223
3	93	49	8	60	25	236
4	101	51	9	63	27	250
5	109	52	9	66	28	264
6	117	54	9	70	29	280
7	127	55	10	73	31	296
8	137	57	10	77	33	314
9	148	59	11	81	34	332
10	160	60	11	85	36	352
11	173	62	12	89	38	373
12	186	64	13	93	40	396
13	201	66	13	98	41	420
14	217	68	14	103	44	446
15	235	70	15	108	46	473
16	254	72	15	114	48	503
17	274	74	16	119	50	534
18	296	77	17	125	53	567
19	319	79	18	131	56	603
20	345	81	19	138	58	641
21	345	81	19	138	58	641
22	345	81	19	138	58	641
23	345	81	19	138	58	641
24	345	81	19	138	58	641
25	345	81	19	138	58	641
26	345	81	19	138	58	641
27	345	81	19	138	58	641
28	345	81	19	138	58	641
29	345	81	19	138	58	641
30	345	81	19	138	58	641

574

Table No. 9.19.6

Average Motorized Traffic Volume

(Vehicle Per day-Both Directions)

JAMRAO & MITHRAO CANAL

DEVELOPMENT YEARS	MOTOR CYCLES	MOTOR CARS	PASSENGER BUSSES	TRUCKS	TRACTOR/ TRAILORS	TOTAL MOTORISED
0	53	99	15	10	23	200
1	57	102	16	11	24	210
2	62	105	17	11	25	220
3	67	108	17	12	27	231
4	72	111	18	12	28	242
5	78	115	19	13	29	254
6	84	118	20	13	31	267
7	91	122	21	14	32	280
8	98	125	22	15	34	294
9	106	129	23	16	36	310
10	114	133	24	16	37	326
11	124	137	26	17	39	343
12	133	141	27	18	41	361
13	144	145	28	19	43	380
14	156	150	30	20	46	400
15	168	154	31	21	48	422
16	182	159	33	22	50	445
17	196	164	34	23	53	470
18	212	169	36	24	55	496
19	229	174	38	25	58	524
20	247	179	40	27	61	554
21	247	179	40	27	61	554
22	247	179	40	27	61	554
23	247	179	40	27	61	554
24	247	179	40	27	61	554
25	247	179	40	27	61	554
26	247	179	40	27	61	554
27	247	179	40	27	61	554
28	247	179	40	27	61	554
29	247	179	40	27	61	554
30	247	179	40	27	61	554

575

Table No. 9.19.7

Average Motorized Traffic Volume

(Vehicle Per day-Both Directions)

GOTKI FEEDER

DEVELOPMENT YEARS	MOTOR CYCLES	MOTOR CARS	PASSENGER BUSSES	TRUCKS	TRACTOR/ TRAILORS	TOTAL MOTORISED
0	81	57	8	20	34	200
1	87	59	8	21	36	211
2	94	60	9	22	37	223
3	102	62	9	23	39	236
4	110	64	10	24	41	250
5	119	66	10	26	43	264
6	129	68	11	27	46	280
7	139	70	11	28	48	296
8	150	72	12	30	50	314
9	162	74	12	31	53	332
10	175	77	13	33	55	352
11	189	79	14	34	58	374
12	204	81	14	36	61	397
13	220	84	15	38	64	421
14	238	86	16	40	67	447
15	257	89	17	42	71	475
16	278	91	17	44	74	504
17	300	94	18	46	78	536
18	324	97	19	48	82	570
19	350	100	20	51	86	606
20	378	103	21	53	90	645
21	378	103	21	53	90	645
22	378	103	21	53	90	645
23	378	103	21	53	90	645
24	378	103	21	53	90	645
25	378	103	21	53	90	645
26	378	103	21	53	90	645
27	378	103	21	53	90	645
28	378	103	21	53	90	645
29	378	103	21	53	90	645
30	378	103	21	53	90	645

Table No. 9.19.8

Average Motorized Traffic Volume

(Vehicle Per day-Both Directions)

ROHRI CANAL

DEVELOPMENT YEARS	MOTOR CYCLES	MOTOR CARS	PASSENGER BUSSES	TRUCKS	TRACTOR/ TRAILORS	TOTAL MOTORISED
0	75	59	13	23	30	200
1	81	61	14	24	32	211
2	87	63	14	25	33	223
3	94	64	15	27	35	235
4	102	66	16	28	36	249
5	110	68	17	29	38	263
6	119	70	17	31	40	278
7	129	73	18	32	42	294
8	139	75	19	34	44	311
9	150	77	20	36	47	329
10	162	79	21	37	49	349
11	175	82	22	39	51	369
12	189	84	23	41	54	392
13	204	87	25	43	57	415
14	220	89	26	46	59	440
15	238	92	27	48	62	467
16	257	95	28	50	65	496
17	278	98	30	53	69	526
18	300	100	31	55	72	559
19	324	103	33	58	76	594
20	350	107	34	61	80	632
21	350	107	34	61	80	632
22	350	107	34	61	80	632
23	350	107	34	61	80	632
24	350	107	34	61	80	632
25	350	107	34	61	80	632
26	350	107	34	61	80	632
27	350	107	34	61	80	632
28	350	107	34	61	80	632
29	350	107	34	61	80	632
30	350	107	34	61	80	632

Table No. 9.19.9

Average Motorized Traffic Volume

(Vehicle Per day-Both Directions)

DADU CANAL

DEVELOPMENT YEARS	MOTOR CYCLES	MOTOR CARS	PASSENGER BUSSES	TRUCKS	TRACTOR/ TRAILORS	TOTAL MOTORISED
0	37	92	8	37	26	200
1	40	95	8	39	27	209
2	43	98	9	41	29	219
3	47	101	9	43	30	229
4	50	104	10	45	32	240
5	54	107	10	47	33	252
6	59	110	11	50	35	264
7	63	113	11	52	37	276
8	68	117	12	55	38	290
9	74	120	12	57	40	304
10	80	124	13	60	42	319
11	86	127	14	63	44	335
12	93	131	14	66	47	352
13	101	135	15	70	49	370
14	109	139	16	73	51	388
15	117	143	17	77	54	408
16	127	148	17	81	57	429
17	137	152	18	85	60	452
18	148	157	19	89	63	475
19	160	161	20	93	66	500
20	172	166	21	98	69	526
21	172	166	21	98	69	526
22	172	166	21	98	69	526
23	172	166	21	98	69	526
24	172	166	21	98	69	526
25	172	166	21	98	69	526
26	172	166	21	98	69	526
27	172	166	21	98	69	526
28	172	166	21	98	69	526
29	172	166	21	98	69	526
30	172	166	21	98	69	526

578

Table No. 9.19.10

Average Motorized Traffic Volume

(Vehicle Per day-Both Directions)

KABUL RIVER CANAL

DEVELOPMENT YEARS	MOTOR CYCLES	MOTOR CARS	PASSENGER BUSSES	TRUCKS	TRACTOR/ TRAILORS	TOTAL MOTORISED
0	23	57	9	56	55	200
1	25	59	9	59	58	210
2	27	60	10	62	61	220
3	29	62	10	65	64	230
4	31	64	11	68	67	241
5	34	66	11	71	70	253
6	36	68	12	75	74	265
7	39	70	13	79	77	278
8	43	72	13	83	81	292
9	46	74	14	87	85	307
10	50	77	15	91	90	322
11	54	79	15	96	94	338
12	58	81	16	101	99	355
13	63	84	17	106	104	373
14	68	86	18	111	109	391
15	73	89	19	116	114	411
16	79	91	20	122	120	432
17	85	94	21	128	126	454
18	92	97	22	135	132	478
19	99	100	23	142	139	502
20	107	103	24	149	146	529
21	107	103	24	149	146	529
22	107	103	24	149	146	529
23	107	103	24	149	146	529
24	107	103	24	149	146	529
25	107	103	24	149	146	529
26	107	103	24	149	146	529
27	107	103	24	149	146	529
28	107	103	24	149	146	529
29	107	103	24	149	146	529
30	107	103	24	149	146	529

579

Table No. 9.19.11

Average Motorized Traffic Volume

(Vehicle Per day-Both Directions)

PAHARPUR CANAL

DEVELOPMENT YEARS	MOTOR CYCLES	MOTOR CARS	PASSENGER BUSSES	TRUCKS	TRACTOR/ TRAILORS	TOTAL MOTORISED
0	66	32	24	36	42	200
1	71	33	25	38	44	211
2	77	34	26	40	46	223
3	83	35	28	42	49	236
4	90	36	29	44	51	250
5	97	37	31	46	54	264
6	105	38	32	48	56	280
7	113	39	34	51	59	296
8	122	41	35	53	62	313
9	132	42	37	56	65	332
10	142	43	39	59	68	352
11	154	44	41	62	72	373
12	166	46	43	65	75	395
13	179	47	45	68	79	419
14	194	48	48	71	83	444
15	209	50	50	75	87	471
16	226	51	52	79	92	500
17	244	53	55	83	96	531
18	264	54	58	87	101	564
19	285	56	61	91	106	599
20	308	58	64	96	111	637
21	308	58	64	96	111	637
22	308	58	64	96	111	637
23	308	58	64	96	111	637
24	308	58	64	96	111	637
25	308	58	64	96	111	637
26	308	58	64	96	111	637
27	308	58	64	96	111	637
28	308	58	64	96	111	637
29	308	58	64	96	111	637
30	308	58	64	96	111	637

580

Table No. 9.19.12

Average Motorized Traffic Volume

(Vehicle Per day-Both Directions)

MARWAT CANAL

DEVELOPMENT YEARS	MOTOR CYCLES	MOTOR CARS	PASSENGER BUSSES	TRUCKS	TRACTOR/ TRAILORS	TOTAL MOTORISED
0	27	86	26	47	14	200
1	29	89	27	49	15	209
2	31	91	29	52	15	219
3	34	94	30	54	16	229
4	37	97	32	57	17	239
5	40	100	33	60	18	250
6	43	103	35	63	19	262
7	46	106	37	66	20	274
8	50	109	38	69	21	287
9	54	112	40	73	22	301
10	58	116	42	77	23	316
11	63	119	44	80	24	331
12	68	123	47	84	25	347
13	73	126	49	89	26	364
14	79	130	51	93	28	382
15	86	134	54	98	29	401
16	93	138	57	103	31	420
17	100	142	60	108	32	441
18	108	146	63	113	34	464
19	117	151	66	119	35	487
20	126	155	69	125	37	512
21	126	155	69	125	37	512
22	126	155	69	125	37	512
23	126	155	69	125	37	512
24	126	155	69	125	37	512
25	126	155	69	125	37	512
26	126	155	69	125	37	512
27	126	155	69	125	37	512
28	126	155	69	125	37	512
29	126	155	69	125	37	512
30	126	155	69	125	37	512

Table No. 9.19.13

Average Motorized Traffic Volume

(Vehicle Per day-Both Directions)

UPPER SWAT CANAL

DEVELOPMENT YEARS	MOTOR CYCLES	MOTOR CARS	PASSENGER BUSSES	TRUCKS	TRACTOR/ TRAILORS	TOTAL MOTORISED
0	27	107	22	23	21	200
1	29	110	23	24	22	209
2	31	114	24	25	23	218
3	34	117	25	27	24	227
4	37	120	27	28	26	237
5	40	124	28	29	27	248
6	43	128	29	31	28	259
7	46	132	31	32	30	271
8	50	136	33	34	31	283
9	54	140	34	36	33	296
10	58	144	36	37	34	310
11	63	148	38	39	36	324
12	68	153	40	41	38	339
13	73	157	41	43	40	355
14	79	162	44	46	42	372
15	86	167	46	48	44	390
16	93	172	48	50	46	408
17	100	177	50	53	48	428
18	108	182	53	55	51	449
19	117	188	56	58	53	471
20	126	193	58	61	56	494
21	126	193	58	61	56	494
22	126	193	58	61	56	494
23	126	193	58	61	56	494
24	126	193	58	61	56	494
25	126	193	58	61	56	494
26	126	193	58	61	56	494
27	126	193	58	61	56	494
28	126	193	58	61	56	494
29	126	193	58	61	56	494
30	126	193	58	61	56	494

582

Table No.9.20.1

MILEAGE COVERED BY MOTORISED VEHICLES.

JHANG SYSTEM

(Million K.m.)

DEVELOPMENT YEARS	MOTOR CYCLES	MOTOR CARS	PASSENGER BUSSES	TRUCKS	TRACTOR/ TRAILORS
0	2.882	3.428	2.259	5.453	1.558
1	3.113	3.530	2.372	5.726	1.636
2	3.362	3.636	2.491	6.012	1.718
3	3.631	3.745	2.615	6.313	1.804
4	3.921	3.858	2.746	6.628	1.894
5	4.235	3.974	2.883	6.960	1.988
6	4.574	4.093	3.027	7.308	2.088
7	4.940	4.216	3.179	7.673	2.192
8	5.335	4.342	3.338	8.057	2.302
9	5.762	4.472	3.505	8.459	2.417
10	6.223	4.606	3.680	8.882	2.538
11	6.720	4.745	3.864	9.326	2.665
12	7.258	4.887	4.057	9.793	2.798
13	7.839	5.034	4.260	10.282	2.938
14	8.466	5.185	4.473	10.797	3.085
15	9.143	5.340	4.697	11.336	3.239
16	9.875	5.500	4.931	11.903	3.401
17	10.665	5.665	5.178	12.498	3.571
18	11.518	5.835	5.437	13.123	3.750
19	12.439	6.010	5.709	13.779	3.937
20	13.434	6.191	5.994	14.468	4.134
21	13.434	6.191	5.994	14.468	4.134
22	13.434	6.191	5.994	14.468	4.134
23	13.434	6.191	5.994	14.468	4.134
24	13.434	6.191	5.994	14.468	4.134
25	13.434	6.191	5.994	14.468	4.134
26	13.434	6.191	5.994	14.468	4.134
27	13.434	6.191	5.994	14.468	4.134
28	13.434	6.191	5.994	14.468	4.134
29	13.434	6.191	5.994	14.468	4.134
30	13.434	6.191	5.994	14.468	4.134

583

Table No. 9.20.2

MILEAGE COVERED BY MOTORISED VEHICLES.

GOGERA CANAL

(Million K.m.)

DEVELOPMENT YEARS	MOTOR CYCLES	MOTOR CARS	PASSENGER BUSSES	TRUCKS	TRACTOR/ TRAILORS
0	4.998	2.142	0.816	0.765	1.479
1	5.398	2.206	0.857	0.803	1.553
2	5.830	2.272	0.900	0.843	1.631
3	6.296	2.341	0.945	0.886	1.712
4	6.800	2.411	0.992	0.930	1.798
5	7.344	2.483	1.041	0.976	1.888
6	7.931	2.558	1.094	1.025	1.982
7	8.566	2.634	1.148	1.076	2.081
8	9.251	2.713	1.206	1.130	2.185
9	9.991	2.795	1.266	1.187	2.294
10	10.790	2.879	1.329	1.246	2.409
11	11.654	2.965	1.396	1.308	2.530
12	12.586	3.054	1.465	1.374	2.656
13	13.593	3.146	1.539	1.443	2.789
14	14.680	3.240	1.616	1.515	2.928
15	15.854	3.337	1.696	1.590	3.075
16	17.123	3.437	1.781	1.670	3.228
17	18.493	3.540	1.870	1.753	3.390
18	19.972	3.647	1.964	1.841	3.559
19	21.570	3.756	2.062	1.933	3.737
20	23.295	3.869	2.165	2.030	3.924
21	23.295	3.869	2.165	2.030	3.924
22	23.295	3.869	2.165	2.030	3.924
23	23.295	3.869	2.165	2.030	3.924
24	23.295	3.869	2.165	2.030	3.924
25	23.295	3.869	2.165	2.030	3.924
26	23.295	3.869	2.165	2.030	3.924
27	23.295	3.869	2.165	2.030	3.924
28	23.295	3.869	2.165	2.030	3.924
29	23.295	3.869	2.165	2.030	3.924
30	23.295	3.869	2.165	2.030	3.924

584

Table No. 9.20.3

MILEAGE COVERED BY MOTORISED VEHICLES.

DEPALPUR CANAL

(Million K.m.)

DEVELOPMENT YEARS	MOTOR CYCLES	MOTOR CARS	PASSENGER BUSSES	TRUCKS	TRACTOR/ TRAILORS
0	10.335	5.565	2.782	3.710	4.107
1	11.162	5.732	2.922	3.895	4.313
2	12.055	5.904	3.068	4.090	4.529
3	13.019	6.081	3.221	4.295	4.755
4	14.061	6.263	3.382	4.510	4.993
5	15.186	6.451	3.551	4.735	5.242
6	16.400	6.645	3.729	4.972	5.504
7	17.712	6.844	3.915	5.220	5.780
8	19.129	7.050	4.111	5.481	6.069
9	20.660	7.261	4.317	5.755	6.372
10	22.312	7.479	4.532	6.043	6.691
11	24.097	7.703	4.759	6.345	7.025
12	26.025	7.934	4.997	6.663	7.376
13	28.107	8.172	5.247	6.996	7.745
14	30.356	8.418	5.509	7.346	8.133
15	32.784	8.670	5.785	7.713	8.539
16	35.407	8.930	6.074	8.098	8.966
17	38.240	9.198	6.378	8.503	9.414
18	41.299	9.474	6.696	8.929	9.885
19	44.603	9.758	7.031	9.375	10.379
20	48.171	10.051	7.383	9.844	10.898
21	48.171	10.051	7.383	9.844	10.898
22	48.171	10.051	7.383	9.844	10.898
23	48.171	10.051	7.383	9.844	10.898
24	48.171	10.051	7.383	9.844	10.898
25	48.171	10.051	7.383	9.844	10.898
26	48.171	10.051	7.383	9.844	10.898
27	48.171	10.051	7.383	9.844	10.898
28	48.171	10.051	7.383	9.844	10.898
29	48.171	10.051	7.383	9.844	10.898
30	48.171	10.051	7.383	9.844	10.898

585

Table No. 9.20.4

MILEAGE COVERED BY MOTORISED VEHICLES.

MAILSI CANAL

(Million K.m.)

DEVELOPMENT YEARS	MOTOR CYCLES	MOTOR CARS	PASSENGER BUSSES	TRUCKS	TRACTOR/ TRAILORS
0	7.703	4.161	2.214	1.771	1.859
1	8.319	4.286	2.324	1.859	1.952
2	8.985	4.415	2.440	1.952	2.050
3	9.704	4.547	2.562	2.050	2.152
4	10.480	4.684	2.691	2.152	2.260
5	11.318	4.824	2.825	2.260	2.373
6	12.224	4.969	2.966	2.373	2.492
7	13.202	5.118	3.115	2.492	2.616
8	14.258	5.272	3.270	2.616	2.747
9	15.398	5.430	3.434	2.747	2.884
10	16.630	5.593	3.606	2.884	3.029
11	17.961	5.760	3.786	3.029	3.180
12	19.397	5.933	3.975	3.180	3.339
13	20.949	6.111	4.174	3.339	3.506
14	22.625	6.294	4.383	3.506	3.681
15	24.435	6.483	4.602	3.681	3.865
16	26.390	6.678	4.832	3.865	4.059
17	28.501	6.878	5.073	4.059	4.262
18	30.781	7.084	5.327	4.262	4.475
19	33.244	7.297	5.593	4.475	4.698
20	35.903	7.516	5.873	4.698	4.933
21	35.903	7.516	5.873	4.698	4.933
22	35.903	7.516	5.873	4.698	4.933
23	35.903	7.516	5.873	4.698	4.933
24	35.903	7.516	5.873	4.698	4.933
25	35.903	7.516	5.873	4.698	4.933
26	35.903	7.516	5.873	4.698	4.933
27	35.903	7.516	5.873	4.698	4.933
28	35.903	7.516	5.873	4.698	4.933
29	35.903	7.516	5.873	4.698	4.933
30	35.903	7.516	5.873	4.698	4.933

586

Table No. 9.20.5

MILEAGE COVERED BY MOTORISED VEHICLES.

NASIR BRANCH

(Million K.m.)

DEVELOPMENT YEARS	MOTOR CYCLES	MOTOR CARS	PASSENGER BUSSES	TRUCKS	TRACTOR/ TRAILORS
0	1.554	0.945	0.147	1.092	0.462
1	1.678	0.973	0.154	1.147	0.485
2	1.813	1.003	0.162	1.204	0.509
3	1.958	1.033	0.170	1.264	0.535
4	2.114	1.064	0.179	1.327	0.562
5	2.283	1.096	0.188	1.394	0.590
6	2.466	1.128	0.197	1.463	0.619
7	2.663	1.162	0.207	1.537	0.650
8	2.876	1.197	0.217	1.613	0.683
9	3.106	1.233	0.228	1.694	0.717
10	3.355	1.270	0.239	1.779	0.753
11	3.623	1.308	0.251	1.868	0.790
12	3.913	1.347	0.264	1.961	0.830
13	4.226	1.388	0.277	2.059	0.871
14	4.564	1.429	0.291	2.162	0.915
15	4.930	1.472	0.306	2.270	0.960
16	5.324	1.516	0.321	2.384	1.008
17	5.750	1.562	0.337	2.503	1.059
18	6.210	1.609	0.354	2.628	1.112
19	6.707	1.657	0.371	2.759	1.167
20	7.243	1.707	0.390	2.897	1.226
21	7.243	1.707	0.390	2.897	1.226
22	7.243	1.707	0.390	2.897	1.226
23	7.243	1.707	0.390	2.897	1.226
24	7.243	1.707	0.390	2.897	1.226
25	7.243	1.707	0.390	2.897	1.226
26	7.243	1.707	0.390	2.897	1.226
27	7.243	1.707	0.390	2.897	1.226
28	7.243	1.707	0.390	2.897	1.226
29	7.243	1.707	0.390	2.897	1.226
30	7.243	1.707	0.390	2.897	1.226

587

Table No. 9.20.6

MILEAGE COVERED BY MOTORISED VEHICLES.

JAMRAO & MITHRAO CANAL

(Million K.m.)

DEVELOPMENT YEARS	MOTOR CYCLES	MOTOR CARS	PASSENGER BUSSES	TRUCKS	TRACTOR/ TRAILORS
0	5.724	10.692	1.620	1.080	2.484
1	6.182	11.013	1.701	1.134	2.608
2	6.676	11.343	1.786	1.191	2.739
3	7.211	11.683	1.875	1.250	2.876
4	7.787	12.034	1.969	1.313	3.019
5	8.410	12.395	2.068	1.378	3.170
6	9.083	12.767	2.171	1.447	3.329
7	9.810	13.150	2.280	1.520	3.495
8	10.595	13.544	2.393	1.596	3.670
9	11.442	13.951	2.513	1.675	3.853
10	12.358	14.369	2.639	1.759	4.046
11	13.346	14.800	2.771	1.847	4.248
12	14.414	15.244	2.909	1.940	4.461
13	15.567	15.702	3.055	2.037	4.684
14	16.812	16.173	3.207	2.138	4.918
15	18.157	16.658	3.368	2.245	5.164
16	19.610	17.158	3.536	2.358	5.422
17	21.179	17.672	3.713	2.475	5.693
18	22.873	18.202	3.899	2.599	5.978
19	24.703	18.748	4.094	2.729	6.277
20	26.679	19.311	4.298	2.866	6.591
21	26.679	19.311	4.298	2.866	6.591
22	26.679	19.311	4.298	2.866	6.591
23	26.679	19.311	4.298	2.866	6.591
24	26.679	19.311	4.298	2.866	6.591
25	26.679	19.311	4.298	2.866	6.591
26	26.679	19.311	4.298	2.866	6.591
27	26.679	19.311	4.298	2.866	6.591
28	26.679	19.311	4.298	2.866	6.591
29	26.679	19.311	4.298	2.866	6.591
30	26.679	19.311	4.298	2.866	6.591

588

Table No. 9.20.7

MILEAGE COVERED BY MOTORISED VEHICLES.

GOTKI FEEDER

(Million K.m.)

DEVELOPMENT YEARS	MOTOR CYCLES	MOTOR CARS	PASSENGER BUSSES	TRUCKS	TRACTOR/ TRAILORS
0	6.602	4.646	0.652	1.630	2.771
1	7.130	4.785	0.685	1.712	2.910
2	7.700	4.928	0.719	1.797	3.055
3	8.316	5.076	0.755	1.887	3.208
4	8.981	5.229	0.793	1.981	3.368
5	9.700	5.385	0.832	2.080	3.537
6	10.476	5.547	0.874	2.184	3.713
7	11.314	5.713	0.917	2.294	3.899
8	12.219	5.885	0.963	2.408	4.094
9	13.196	6.061	1.011	2.529	4.299
10	14.252	6.243	1.062	2.655	4.514
11	15.392	6.430	1.115	2.788	4.739
12	16.624	6.623	1.171	2.927	4.976
13	17.954	6.822	1.229	3.074	5.225
14	19.390	7.027	1.291	3.227	5.486
15	20.941	7.238	1.355	3.389	5.761
16	22.616	7.455	1.423	3.558	6.049
17	24.426	7.678	1.494	3.736	6.351
18	26.380	7.909	1.569	3.923	6.669
19	28.490	8.146	1.648	4.119	7.002
20	30.769	8.390	1.730	4.325	7.352
21	30.769	8.390	1.730	4.325	7.352
22	30.769	8.390	1.730	4.325	7.352
23	30.769	8.390	1.730	4.325	7.352
24	30.769	8.390	1.730	4.325	7.352
25	30.769	8.390	1.730	4.325	7.352
26	30.769	8.390	1.730	4.325	7.352
27	30.769	8.390	1.730	4.325	7.352
28	30.769	8.390	1.730	4.325	7.352
29	30.769	8.390	1.730	4.325	7.352
30	30.769	8.390	1.730	4.325	7.352

589

Table No. 9.20.8

MILEAGE COVERED BY MOTORISED VEHICLES.

ROHRI CANAL

(Million K.m.)

DEVELOPMENT YEARS	MOTOR CYCLES	MOTOR CARS	PASSENGER BUSSES	TRUCKS	TRACTOR/ TRAILORS
0	2.730	2.148	0.473	0.837	1.092
1	2.948	2.212	0.497	0.879	1.147
2	3.184	2.278	0.522	0.923	1.204
3	3.439	2.347	0.548	0.969	1.264
4	3.714	2.417	0.575	1.018	1.327
5	4.011	2.490	0.604	1.069	1.394
6	4.332	2.564	0.634	1.122	1.463
7	4.679	2.641	0.666	1.178	1.537
8	5.053	2.721	0.699	1.237	1.613
9	5.457	2.802	0.734	1.299	1.694
10	5.894	2.886	0.771	1.364	1.779
11	6.365	2.973	0.809	1.432	1.868
12	6.875	3.062	0.850	1.503	1.961
13	7.425	3.154	0.892	1.579	2.059
14	8.019	3.248	0.937	1.658	2.162
15	8.660	3.346	0.984	1.740	2.270
16	9.353	3.446	1.033	1.828	2.384
17	10.101	3.550	1.085	1.919	2.503
18	10.909	3.656	1.139	2.015	2.628
19	11.782	3.766	1.196	2.116	2.759
20	12.724	3.879	1.256	2.221	2.897
21	12.724	3.879	1.256	2.221	2.897
22	12.724	3.879	1.256	2.221	2.897
23	12.724	3.879	1.256	2.221	2.897
24	12.724	3.879	1.256	2.221	2.897
25	12.724	3.879	1.256	2.221	2.897
26	12.724	3.879	1.256	2.221	2.897
27	12.724	3.879	1.256	2.221	2.897
28	12.724	3.879	1.256	2.221	2.897
29	12.724	3.879	1.256	2.221	2.897
30	12.724	3.879	1.256	2.221	2.897

Table No. 9.20.9

MILEAGE COVERED BY MOTORISED VEHICLES.

DADU CANAL

(Million K.m.)

DEVELOPMENT YEARS	MOTOR CYCLES	MOTOR CARS	PASSENGER BUSSES	TRUCKS	TRACTOR/ TRAILORS
0	1.406	3.496	0.304	1.406	0.988
1	1.518	3.601	0.319	1.476	1.037
2	1.640	3.709	0.335	1.550	1.089
3	1.771	3.820	0.352	1.628	1.144
4	1.913	3.935	0.370	1.709	1.201
5	2.066	4.053	0.388	1.794	1.261
6	2.231	4.174	0.407	1.884	1.324
7	2.410	4.300	0.428	1.978	1.390
8	2.602	4.429	0.449	2.077	1.460
9	2.811	4.561	0.472	2.181	1.533
10	3.035	4.698	0.495	2.290	1.609
11	3.278	4.839	0.520	2.405	1.690
12	3.541	4.984	0.546	2.525	1.774
13	3.824	5.134	0.573	2.651	1.863
14	4.130	5.288	0.602	2.784	1.956
15	4.460	5.447	0.632	2.923	2.054
16	4.817	5.610	0.664	3.069	2.157
17	5.202	5.778	0.697	3.223	2.265
18	5.618	5.952	0.732	3.384	2.378
19	6.068	6.130	0.768	3.553	2.497
20	6.553	6.314	0.807	3.731	2.621
21	6.553	6.314	0.807	3.731	2.621
22	6.553	6.314	0.807	3.731	2.621
23	6.553	6.314	0.807	3.731	2.621
24	6.553	6.314	0.807	3.731	2.621
25	6.553	6.314	0.807	3.731	2.621
26	6.553	6.314	0.807	3.731	2.621
27	6.553	6.314	0.807	3.731	2.621
28	6.553	6.314	0.807	3.731	2.621
29	6.553	6.314	0.807	3.731	2.621
30	6.553	6.314	0.807	3.731	2.621

Table No. 9.20.10

MILEAGE COVERED BY MOTORISED VEHICLES.

KABUL RIVER CANAL

(Million K.m.)

DEVELOPMENT YEARS	MOTOR CYCLES	MOTOR CARS	PASSENGER BUSSES	TRUCKS	TRACTOR/ TRAILORS
0	0.259	0.641	0.101	0.630	0.619
1	0.279	0.660	0.106	0.662	0.650
2	0.302	0.680	0.112	0.695	0.682
3	0.326	0.701	0.117	0.729	0.716
4	0.352	0.722	0.123	0.766	0.752
5	0.380	0.743	0.129	0.804	0.790
6	0.411	0.766	0.136	0.844	0.829
7	0.443	0.789	0.142	0.886	0.871
8	0.479	0.812	0.150	0.931	0.914
9	0.517	0.837	0.157	0.977	0.960
10	0.559	0.862	0.165	1.026	1.008
11	0.603	0.888	0.173	1.078	1.058
12	0.652	0.914	0.182	1.131	1.111
13	0.704	0.942	0.191	1.188	1.167
14	0.760	0.970	0.200	1.247	1.225
15	0.821	0.999	0.210	1.310	1.286
16	0.886	1.029	0.221	1.375	1.351
17	0.957	1.060	0.232	1.444	1.418
18	1.034	1.092	0.244	1.516	1.489
19	1.117	1.124	0.256	1.592	1.564
20	1.206	1.158	0.269	1.672	1.642
21	1.206	1.158	0.269	1.672	1.642
22	1.206	1.158	0.269	1.672	1.642
23	1.206	1.158	0.269	1.672	1.642
24	1.206	1.158	0.269	1.672	1.642
25	1.206	1.158	0.269	1.672	1.642
26	1.206	1.158	0.269	1.672	1.642
27	1.206	1.158	0.269	1.672	1.642
28	1.206	1.158	0.269	1.672	1.642
29	1.206	1.158	0.269	1.672	1.642
30	1.206	1.158	0.269	1.672	1.642

592

Table No. 9.20.11

MILEAGE COVERED BY MOTORISED VEHICLES.

PAHARPUR CANAL

(Million K.m.)

DEVELOPMENT YEARS	MOTOR CYCLES	MOTOR CARS	PASSENGER BUSSES	TRUCKS	TRACTOR/ TRAILORS
0	1.228	0.595	0.446	0.670	0.781
1	1.326	0.613	0.469	0.703	0.820
2	1.432	0.631	0.492	0.738	0.861
3	1.546	0.650	0.517	0.775	0.904
4	1.670	0.670	0.543	0.814	0.950
5	1.804	0.690	0.570	0.855	0.997
6	1.948	0.711	0.598	0.897	1.047
7	2.104	0.732	0.628	0.942	1.099
8	2.272	0.754	0.660	0.989	1.154
9	2.454	0.777	0.693	1.039	1.212
10	2.650	0.800	0.727	1.091	1.272
11	2.862	0.824	0.763	1.145	1.336
12	3.091	0.849	0.802	1.203	1.403
13	3.339	0.874	0.842	1.263	1.473
14	3.606	0.900	0.884	1.326	1.547
15	3.894	0.927	0.928	1.392	1.624
16	4.206	0.955	0.974	1.462	1.705
17	4.542	0.984	1.023	1.535	1.791
18	4.906	1.013	1.074	1.611	1.880
19	5.298	1.044	1.128	1.692	1.974
20	5.722	1.075	1.184	1.777	2.073
21	5.722	1.075	1.184	1.777	2.073
22	5.722	1.075	1.184	1.777	2.073
23	5.722	1.075	1.184	1.777	2.073
24	5.722	1.075	1.184	1.777	2.073
25	5.722	1.075	1.184	1.777	2.073
26	5.722	1.075	1.184	1.777	2.073
27	5.722	1.075	1.184	1.777	2.073
28	5.722	1.075	1.184	1.777	2.073
29	5.722	1.075	1.184	1.777	2.073
30	5.722	1.075	1.184	1.777	2.073

Table No. 9.20.12

MILEAGE COVERED BY MOTORISED VEHICLES.

MARWAT CANAL

(Million K.m.)

DEVELOPMENT YEARS	MOTOR CYCLES	MOTOR CARS	PASSENGER BUSSES	TRUCKS	TRACTOR/ TRAILORS
0	0.446	1.419	0.429	0.776	0.231
1	0.481	1.462	0.450	0.814	0.243
2	0.520	1.505	0.473	0.855	0.255
3	0.561	1.551	0.497	0.898	0.267
4	0.606	1.597	0.521	0.943	0.281
5	0.655	1.645	0.548	0.990	0.295
6	0.707	1.694	0.575	1.039	0.310
7	0.764	1.745	0.604	1.091	0.325
8	0.825	1.798	0.634	1.146	0.341
9	0.891	1.851	0.666	1.203	0.358
10	0.962	1.907	0.699	1.263	0.376
11	1.039	1.964	0.734	1.326	0.395
12	1.122	2.023	0.770	1.393	0.415
13	1.212	2.084	0.809	1.462	0.436
14	1.309	2.146	0.849	1.535	0.457
15	1.413	2.211	0.892	1.612	0.480
16	1.526	2.277	0.936	1.693	0.504
17	1.648	2.345	0.983	1.777	0.529
18	1.780	2.416	1.032	1.866	0.556
19	1.923	2.488	1.084	1.960	0.584
20	2.076	2.563	1.138	2.058	0.613
21	2.076	2.563	1.138	2.058	0.613
22	2.076	2.563	1.138	2.058	0.613
23	2.076	2.563	1.138	2.058	0.613
24	2.076	2.563	1.138	2.058	0.613
25	2.076	2.563	1.138	2.058	0.613
26	2.076	2.563	1.138	2.058	0.613
27	2.076	2.563	1.138	2.058	0.613
28	2.076	2.563	1.138	2.058	0.613
29	2.076	2.563	1.138	2.058	0.613
30	2.076	2.563	1.138	2.058	0.613

594

Table No. 9.20.13

MILEAGE COVERED BY MOTORISED VEHICLES.

UPPER SWAT CANAL

(Million K.m.)

DEVELOPMENT YEARS	MOTOR CYCLES	MOTOR CARS	PASSENGER BUSSES	TRUCKS	TRACTOR/ TRAILORS
0	1.315	5.211	1.071	1.120	1.023
1	1.420	5.367	1.125	1.176	1.074
2	1.534	5.528	1.181	1.235	1.128
3	1.656	5.694	1.240	1.297	1.184
4	1.789	5.865	1.302	1.361	1.243
5	1.932	6.041	1.367	1.430	1.305
6	2.087	6.222	1.436	1.501	1.371
7	2.254	6.409	1.508	1.576	1.439
8	2.434	6.601	1.583	1.655	1.511
9	2.628	6.799	1.662	1.738	1.587
10	2.839	7.003	1.745	1.825	1.666
11	3.066	7.213	1.832	1.916	1.749
12	3.311	7.429	1.924	2.012	1.837
13	3.576	7.652	2.020	2.112	1.928
14	3.862	7.882	2.121	2.218	2.025
15	4.171	8.118	2.227	2.329	2.126
16	4.505	8.362	2.339	2.445	2.232
17	4.865	8.613	2.456	2.567	2.344
18	5.254	8.871	2.578	2.696	2.461
19	5.675	9.137	2.707	2.830	2.584
20	6.129	9.411	2.843	2.972	2.714
21	6.129	9.411	2.843	2.972	2.714
22	6.129	9.411	2.843	2.972	2.714
23	6.129	9.411	2.843	2.972	2.714
24	6.129	9.411	2.843	2.972	2.714
25	6.129	9.411	2.843	2.972	2.714
26	6.129	9.411	2.843	2.972	2.714
27	6.129	9.411	2.843	2.972	2.714
28	6.129	9.411	2.843	2.972	2.714
29	6.129	9.411	2.843	2.972	2.714
30	6.129	9.411	2.843	2.972	2.714

Table No. 9.21.1

Economic Costs of Running Vehicles.

(Without Improvement)

JHANG SYSTEM

(Million Rs.)

DEVELOPMENT YEARS	MOTOR CYCLES	MOTOR CARS	PASSENGER BUSSES	TRUCKS	TRACTOR/ TRAILORS	TOTAL COST
0	1.866	8.877	12.244	19.794	5.656	48.438
1	2.016	9.144	12.857	20.784	5.938	50.738
2	2.177	9.418	13.499	21.823	6.235	53.153
3	2.351	9.701	14.174	22.914	6.547	55.687
4	2.539	9.992	14.883	24.060	6.874	58.348
5	2.742	10.291	15.627	25.263	7.218	61.142
6	2.962	10.600	16.409	26.526	7.579	64.076
7	3.198	10.918	17.229	27.853	7.958	67.156
8	3.454	11.246	18.090	29.245	8.356	70.392
9	3.731	11.583	18.995	30.708	8.774	73.790
10	4.029	11.931	19.945	32.243	9.212	77.360
11	4.352	12.289	20.942	33.855	9.673	81.110
12	4.700	12.657	21.989	35.548	10.157	85.050
13	5.076	13.037	23.088	37.325	10.664	89.191
14	5.482	13.428	24.243	39.192	11,198	93.542
15	5.920	13.831	25.455	41.151	11.757	98.115
16	6.394	14.246	26.728	43.209	12.345	102.921
17	6.905	14.673	28.064	45.369	12.963	107.974
18	7.458	15.113	29.467	47.638	13.611	113.287
19	8.054	15.567	30.941	50.019	14.291	118.873
20	8.699	16.034	32.488	52.520	15.006	124.746
21	8.699	16.034	32.488	52.520	15.006	124.746
22	8.699	16.034	32.488	52.520	15.006	124.746
23	8.699	16.034	32.488	52.520	15.006	124.746
24	8.699	16.034	32.488	52.520	15.006	124.746
25	8.699	16.034	32.488	52.520	15.006	124.746
26	8.699	16.034	32.488	52.520	15.006	124.746
27	8.699	16.034	32.488	52.520	15.006	124.746
28	8.699	16.034	32.488	52.520	15.006	124.746
29	8.699	16.034	32.488	52.520	15.006	124.746
30	8.699	16.034	32.488	52.520	15.006	124.746

596

Table No. 9.21.2

Economic Costs of Running Vehicles.

(Without Improvement)

GOGERA SYSTEM

(Million Rs.)

DEVELOPMENT YEARS	MOTOR CYCLES	MOTOR CARS	PASSENGER BUSSES	TRUCKS	TRACTOR/ TRAILORS	TOTAL COST
0	3.236	5.548	4.423	2.777	5.369	21.352
1	3.495	5.714	4.644	2.916	5.637	22.406
2	3.775	5.886	4.876	3.062	5.919	23.517
3	4.077	6.062	5.120	3.215	6.215	24.688
4	4.403	6.244	5.376	3.375	6.526	25.924
5	4.755	6.431	5.645	3.544	6.852	27.227
6	5.135	6.624	5.927	3.721	7.195	28.603
7	5.546	6.823	6.223	3.907	7.554	30.054
8	5.990	7.028	6.534	4.103	7.932	31.587
9	6.469	7.239	6.861	4.308	8.329	33.206
10	6.987	7.456	7.204	4.523	8.745	34.915
11	7.546	7.679	7.564	4.750	9.182	36.721
12	8.149	7.910	7.943	4.987	9.642	38.630
13	8.801	8.147	8.340	5.236	10.124	40.648
14	9.505	8.392	8.757	5.498	10.630	42.782
15	10.266	8.643	9.195	5.773	11.161	45.038
16	11.087	8.903	9.654	6.062	11.719	47.425
17	11.974	9.170	10.137	6.365	12.305	49.951
18	12.932	9.445	10.644	6.683	12.921	52.624
19	13.966	9.728	11.176	7.017	13.567	55.454
20	15.084	10.020	11.735	7.368	14.245	58.452
21	15.084	10.020	11.735	7.368	14.245	58.452
22	15.084	10.020	11.735	7.368	14.245	58.452
23	15.084	10.020	11.735	7.368	14.245	58.452
24	15.084	10.020	11.735	7.368	14.245	58.452
25	15.084	10.020	11.735	7.368	14.245	58.452
26	15.084	10.020	11.735	7.368	14.245	58.452
27	15.084	10.020	11.735	7.368	14.245	58.452
28	15.084	10.020	11.735	7.368	14.245	58.452
29	15.084	10.020	11.735	7.368	14.245	58.452
30	15.084	10.020	11.735	7.368	14.245	58.452

597

Table No. 9.21.3

Economic Costs of Running Vehicles.

(Without Improvement)

DEPALPUR SYSTEM

(Million Rs.)

DEVELOPMENT YEARS	MOTOR CYCLES	MOTOR CARS	PASSENGER BUSSES	TRUCKS	TRACTOR/ TRAILORS	TOTAL COST
0	6.692	14.413	15.081	13.467	14.910	64.564
1	7.227	14.846	15.835	14.141	15.656	67.705
2	7.805	15.291	16.627	14.848	16.439	71.010
3	8.430	15.750	17.458	15.590	17.260	74.489
4	9.104	16.222	18.331	16.370	18.123	78.151
5	9.833	16.709	19.248	17.188	19.030	82.007
6	10.619	17.210	20.210	18.047	19.981	86.068
7	11.469	17.727	21.221	18.950	20.980	90.346
8	12.386	18.258	22.282	19.897	22.029	94.853
9	13.377	18.806	23.396	20.892	23.131	99.602
10	14.447	19.370	24.566	21.937	24.287	104.607
11	15.603	19.951	25.794	23.034	25.502	109.884
12	16.851	20.550	27.084	24.185	26.777	115.447
13	18.199	21.166	28.438	25.395	28.115	121.314
14	19.655	21.801	29.860	26.664	29.521	127.502
15	21.228	22.456	31.353	27.998	30.997	134.031
16	22.926	23.129	32.920	29.397	32.547	140.920
17	24.760	23.823	34.566	30.867	34.175	148.191
18	26.741	24.538	36.295	32.411	35.883	55.867
19	28.880	25.274	38.109	34.031	37.677	163.972
20	31.191	26.032	40.015	35.733	39.561	172.532
21	31.191	26.032	40.015	35.733	39.561	172.532
22	31.191	26.032	40.015	35.733	39.561	172.532
23	31.191	26.032	40.015	35.733	39.561	172.532
24	31.191	26.032	40.015	35.733	39.561	172.532
25	31.191	26.032	40.015	35.733	39.561	172.532
26	31.191	26.032	40.015	35.733	39.561	172.532
27	31.191	26.032	40.015	35.733	39.561	172.532
28	31.191	26.032	40.015	35.733	39.561	172.532
29	31.191	26.032	40.015	35.733	39.561	172.532
30	31.191	26.032	40.015	35.733	39.561	172.532

598

Table No. 9.21.4

Economic Costs of Running Vehicles.

(Without Improvement)

MAILSI SYSTEM

(Million Rs.)

DEVELOPMENT YEARS	MOTOR CYCLES	MOTOR CARS	PASSENGER BUSSES	TRUCKS	TRACTOR/ TRAILORS	TOTAL COST
0	4.988	10.778	11.997	6.428	6.749	40.940
1	5.387	11.101	12.597	6.749	7.087	42.921
2	5.818	11.434	13.227	7.087	7.441	45.007
3	6.283	11.777	13.888	7.441	7.813	47.203
4	6.786	12.131	14.583	7.813	8.204	49.516
5	7.329	12.495	15.312	8.204	8.614	51.953
6	7.915	12.869	16.077	8.614	9.045	54.521
7	8.548	13.256	16.881	9.045	9.497	57.227
8	9.232	13.653	17.725	9.497	9.972	60.079
9	9.970	14.063	18.612	9.972	10.471	63.087
10	10.768	14.485	19.542	10.471	10.994	66.259
11	11.629	14.919	20.519	10.994	11.544	69.606
12	12.560	15.367	21.545	11.544	12.121	73.137
13	13.565	15.828	22.622	12.121	12.727	76.863
14	14.650	16.303	23.754	12.727	13.363	80.796
15	15.822	16.792	24.941	13.363	14.032	84.950
16	17.088	17.295	26.188	14.032	14.733	89.336
17	18.455	17.814	27.498	14.733	15.470	93.969
18	19.931	18.349	28.873	15.470	16.243	98.865
19	21.525	18.899	30.316	16.243	17.055	104.039
20	23.247	19.466	31.832	17.055	17.908	109.509
21	23.247	19.466	31.832	17.055	17.908	109.509
22	23.247	19.466	31.832	17.055	17.908	109.509
23	23.247	19.466	31.832	17.055	17.908	109.509
24	23.247	19.466	31.832	17.055	17.908	109.509
25	23.247	19.466	31.832	17.055	17.908	109.509
26	23.247	19.466	31.832	17.055	17.908	109.509
27	23.247	19.466	31.832	17.055	17.908	109.509
28	23.247	19.466	31.832	17.055	17.908	109.509
29	23.247	19.466	31.832	17.055	17.908	109.509
30	23.247	19.466	31.832	17.055	17.908	109.509

Table No. 9.21.5

Economic Costs of Running Vehicles.

(Without Improvement)

NASIR SYSTEM

(Million Rs.)

DEVELOPMENT YEARS	MOTOR CYCLES	MOTOR CARS	PASSENGER BUSSES	TRUCKS	TRACTOR/ TRAILORS	TOTAL COST
0	1.006	2.448	0.797	3.964	1.677	9.892
1	1.087	2.521	0.837	4.162	1.761	10.367
2	1.174	2.597	0.878	4.370	1.849	10.868
3	1.268	2.675	0.922	4.589	1.941	11.395
4	1.369	2.755	0.968	4.818	2.038	11.949
5	1.478	2.837	1.017	5.059	2.140	12.532
6	1.597	2.923	1.068	5.312	2.247	13.146
7	1.724	3.010	1.121	5.578	2.360	13.793
8	1.862	3.100	1.177	5.857	2.478	14.474
9	2.011	3.193	1.236	6.149	2.602	15.192
10	2.172	3.289	1.298	6.457	2.732	15.948
11	2.346	3.388	1.363	6.780	2.868	16.745
12	2.534	3.490	1.431	7.119	3.012	17.585
13	2.737	3.594	1.502	7.475	3.162	18.470
14	2.955	3.702	1.577	7.848	3.320	19.404
15	3.192	3.813	1.656	8.241	3.486	20.389
16	3.447	3.928	1.739	8.653	3.661	21.428
17	3.723	4.045	1.826	9.085	3.844	22.524
18	4.021	4.167	1.917	9.540	4.036	23.681
19	4.343	4.292	2.013	10.017	4.238	24.902
20	4.690	4.421	2.114	10.518	4.450	26.192
21	4.690	4.421	2.114	10.518	4.450	26.192
22	4.690	4.421	2.114	10.518	4.450	26.192
23	4.690	4.421	2.114	10.518	4.450	26.192
24	4.690	4.421	2.114	10.518	4.450	26.192
25	4.690	4.421	2.114	10.518	4.450	26.192
26	4.690	4.421	2.114	10.518	4.450	26.192
27	4.690	4.421	2.114	10.518	4.450	26.192
28	4.690	4.421	2.114	10.518	4.450	26.192
29	4.690	4.421	2.114	10.518	4.450	26.192
30	4.690	4.421	2.114	10.518	4.450	26.192

600

Table No. 9.21.6

Economic Costs of Running Vehicles.

(Without Improvement)

JAMRAO & MITHRAO SYSTEM

(Million Rs.)

DEVELOPMENT YEARS	MOTOR CYCLES	MOTOR CARS	PASSENGER BUSSES	TRUCKS	TRACTOR/ TRAILORS	TOTAL COST
0	3.706	27.692	8.780	3.920	9.017	53.116
1	4.003	28.523	9.219	4.116	9.468	55.329
2	4.323	29.379	9.680	4.322	9.941	57.646
3	4.669	30.260	10.164	4.538	10.438	60.070
4	5.042	31.168	10.673	4.765	10.960	62.608
5	5.446	32.103	11.206	5.004	11.508	65.267
6	5.881	33.066	11.767	5.254	12.084	68.051
7	6.352	34.058	12.355	5.516	12.688	70.969
8	6.860	35.080	12.973	5.792	13.322	74.027
9	7.409	36.132	13.621	6.082	13.988	77.232
10	8.002	37.216	14.302	6.386	14.688	80.594
11	8.642	38.333	15.017	6.705	15.422	84.119
12	9.333	39.483	15.768	7.040	16.193	87.818
13	10.080	40.667	16.557	7.392	17.003	91.699
14	10.886	41.887	17.385	7.762	17.853	95.773
15	11.757	43.144	18.254	8.150	18.746	100.050
16	12.698	44.438	19.167	8.558	19.683	104.543
17	13.713	45.771	20.125	8.986	20.667	109.262
18	14.810	47.144	21.131	9.435	21.700	114.221
19	15.995	48.559	22.188	9.907	22.785	119.433
20	17.275	50.015	23.297	10.402	23.925	124.914
21	17.275	50.015	23.297	10.402	23.925	124.914
22	17.275	50.015	23.297	10.402	23.925	124.914
23	17.275	50.015	23.297	10.402	23.925	124.914
24	17.275	50.015	23.297	10.402	23.925	124.914
25	17.275	50.015	23.297	10.402	23.925	124.914
26	17.275	50.015	23.297	10.402	23.925	124.914
27	17.275	50.015	23.297	10.402	23.925	124.914
28	17.275	50.015	23.297	10.402	23.925	124.914
29	17.275	50.015	23.297	10.402	23.925	124.914
30	17.275	50.015	23.297	10.402	23.925	124.914

601

Table No. 9.21.7

Economic Costs of Running Vehicles.

(Without Improvement)

GOTKI FEEDER

(Million Rs.)

DEVELOPMENT YEARS	MOTOR CYCLES	MOTOR CARS	PASSENGER BUSSES	TRUCKS	TRACTOR/ TRAILORS	TOTAL COST
0	4.274	12.032	3.534	5.917	10.059	35.816
1	4.616	12.393	3.711	6.213	10.562	37.494
2	4.986	12.765	3.896	6.523	11.090	39.260
3	5.385	13.148	4.091	6.850	11.644	41.117
4	5.815	13.542	4.295	7.192	12.226	43.071
5	6.281	13.948	4.510	7.552	12.838	45.128
6	6.783	14.367	4.736	7.929	13.480	47.294
7	7.326	14.798	4.972	8.326	14.154	49.575
8	7.912	15.242	5.221	8.742	14.861	51.978
9	8.545	15.699	5.482	9.179	15.604	54.509
10	9.228	16.170	5.756	9.638	16.385	57.177
11	9.967	16.655	6.044	10.120	17.204	59.989
12	10.764	17.155	6.346	10.626	18.064	62.955
13	11.625	17.669	6.664	11.157	18.967	66.082
14	12.555	18.199	6.997	11.715	19.916	69.382
15	13.559	18.745	7.347	12.301	20.911	72.863
16	14.644	19.308	7.714	12.916	21.957	76.538
17	15.816	19.887	8.100	13.562	23.055	80.418
18	17.081	20.483	8.505	14.240	24.208	84.516
19	18.447	21.098	8.930	14.952	25.418	88.845
20	19.923	21.731	9.376	15.699	26.689	93.418
21	19.923	21.731	9.376	15.699	26.689	93.418
22	19.923	21.731	9.376	15.699	26.689	93.418
23	19.923	21.731	9.376	15.699	26.689	93.418
24	19.923	21.731	9.376	15.699	26.689	93.418
25	19.923	21.731	9.376	15.699	26.689	93.418
26	19.923	21.731	9.376	15.699	26.689	93.418
27	19.923	21.731	9.376	15.699	26.689	93.418
28	19.923	21.731	9.376	15.699	26.689	93.418
29	19.923	21.731	9.376	15.699	26.689	93.418
30	19.923	21.731	9.376	15.699	26.689	93.418

602

Table No. 9.21.8

Economic Costs of Running Vehicles.

(Without Improvement)

ROHRI SYSTEM

(Million Rs.)

DEVELOPMENT YEARS	MOTOR CYCLES	MOTOR CARS	PASSENGER BUSSES	TRUCKS	TRACTOR/ TRAILORS	TOTAL COST
0	1.768	5.562	2.565	3.039	3.964	16.898
1	1.909	5.729	2.693	3.191	4.162	17.684
2	2.062	5.901	2.828	3.351	4.370	18.511
3	2.227	6.078	2.969	3.518	4.589	19.381
4	2.405	6.260	3.117	3.694	4.818	20.295
5	2.597	6.448	3.273	3.879	5.059	21.257
6	2.805	6.642	3.437	4.073	5.312	22.268
7	3.029	6.841	3.609	4.276	5.578	23.333
8	3.272	7.046	3.789	4.490	5.857	24.454
9	3.534	7.258	3.979	4.715	6.149	25.634
10	3.816	7.475	4.178	4.950	6.457	26.876
11	4.122	7.700	4.387	5.198	6.780	28.185
12	4.451	7.930	4.606	5.458	7.119	29.564
13	4.807	8.168	4.836	5.731	7.475	31.017
14	5.192	8.413	5.078	6.017	7.848	32.549
15	5.607	8.666	5.332	6.318	8.241	34.164
16	6.056	8.926	5.599	6.634	8.653	35.867
17	6.540	9.194	5.878	6.966	9.085	37.663
18	7.064	9.469	6.172	7.314	9.540	39.559
19	7.629	9.753	6.481	7.679	10.017	41.559
20	8.239	10.046	6.805	8.063	10.518	43.671
21	8.239	10.046	6.805	8.063	10.518	43.671
22	8.239	10.046	6.805	8.063	10.518	43.671
23	8.239	10.046	6.805	8.063	10.518	43.671
24	8.239	10.046	6.805	8.063	10.518	43.671
25	8.239	10.046	6.805	8.063	10.518	43.671
26	8.239	10.046	6.805	8.063	10.518	43.671
27	8.239	10.046	6.805	8.063	10.518	43.671
28	8.239	10.046	6.805	8.063	10.518	43.671
29	8.239	10.046	6.805	8.063	10.518	43.671
30	8.239	10.046	6.805	8.063	10.518	43.671

1103

Table No. 9.21.9

Economic Costs of Running Vehicles.

(Without Improvement)

DADU SYSTEM

(Million Rs.)

DEVELOPMENT YEARS	MOTOR CYCLES	MOTOR CARS	PASSENGER BUSSES	TRUCKS	TRACTOR/ TRAILORS	TOTAL COST
0	0.910	9.055	1.648	5.104	3.586	20.303
1	0.983	9.326	1.730	5.359	3.766	21.164
2	1.062	9.606	1.817	5.627	3.954	22.065
3	1.147	9.894	1.907	5.908	4.152	23.008
4	1.239	10.191	2.003	6.204	4.359	23.995
5	1.338	10.497	2.103	6.514	4.577	25.029
6	1.445	10.812	2.208	6.840	4.806	26.110
7	1.560	11.136	2.318	7.182	5.046	27.243
8	1.685	11.470	2.434	7.541	5.299	28.429
9	1.820	11.814	2.556	7.918	5.564	29.672
10	1.965	12.169	2.684	8.314	5.842	30.973
11	2.123	12.534	2.818	8.729	6.134	32.338
12	2.293	12.910	2.959	9.166	6.441	33.768
13	2.476	13.297	3.107	9.624	6.763	35.267
14	2.674	13.696	3.262	10.105	7.101	36.838
15	2.888	14.107	3.425	10.610	7.456	38.486
16	3.119	14.530	3.597	11.141	7.829	40.215
17	3.368	14.966	3.777	11.698	8.220	42.029
18	3.638	15.415	3.965	12.283	8.631	43.932
19	3.929	15.877	4.164	12.897	9.063	45.930
20	4.243	16.354	4.372	13.542	9.516	48.026
21	4.243	16.354	4.372	13.542	9.516	48.026
22	4.243	16.354	4.372	13.542	9.516	48.026
23	4.243	16.354	4.372	13.542	9.516	48.026
24	4.243	16.354	4.372	13.542	9.516	48.026
25	4.243	16.354	4.372	13.542	9.516	48.026
26	4.243	16.354	4.372	13.542	9.516	48.026
27	4.243	16.354	4.372	13.542	9.516	48.026
28	4.243	16.354	4.372	13.542	9.516	48.026
29	4.243	16.354	4.372	13.542	9.516	48,026
30	4.243	16.354	4.372	13.542	9.516	48.026

604

Table No. 9.21.10

Economic Costs of Running Vehicles.

(Without Improvement)

KABUL SYSTEM

(Million Rs.)

DEVELOPMENT YEARS	MOTOR CYCLES	MOTOR CARS	PASSENGER BUSSES	TRUCKS	TRACTOR/ TRAILORS	TOTAL COST
0	0.168	1.661	0.549	2.287	2.246	6.910
1	0.181	1.711	0.576	2.401	2.358	7.227
2	0.195	1.762	0.605	2.521	2.476	7.560
3	0.211	1.815	0.635	2.647	2.600	7.909
4	0.228	1.869	0.667	2.780	2.730	8.274
5	0.246	1.925	0.700	2.919	2.867	8.657
6	0.266	1.983	0.735	3.065	3.010	9.059
7	0.287	2.043	0.772	3.218	3.160	9.480
8	0.310	2.104	0.811	3.379	3.318	9.922
9	0.335	2.167	0.851	3.548	3.484	10.385
10	0.362	2.232	0.894	3.725	3.659	10.871
11	0.391	2.299	0.939	3.911	3.842	11.381
12	0.422	2.368	0.986	4.107	4.034	11.916
13	0.456	2.439	1.035	4.312	4.235	12.477
14	0.492	2.512	1.087	4.528	4.447	13.066
15	0.531	2.588	1.141	4.754	4.669	13.684
16	0.574	2.665	1.198	4.992	4.903	14.332
17	0.620	2.745	1.258	5.242	5.148	15.012
18	0.669	2.827	1.321	5.504	5.405	15.727
19	0.723	2.912	1.387	5.779	5.676	16.477
20	0.781	3.000	1.456	6.068	5.959	17.264
21	0.781	3.000	1.456	6.068	5.959	17.264
22	0.781	3.000	1.456	6.068	5.959	17.264
23	0.781	3.000	1.456	6.068	5.959	17.264
24	0.781	3.000	1.456	6.068	5.959	17.264
25	0.781	3.000	1.456	6.068	5.959	17.264
26	0.781	3.000	1.456	6.068	5.959	17.264
27	0.781	3.000	1.456	6.068	5.959	17.264
28	0.781	3.000	1.456	6.068	5.959	17.264
29	0.781	3.000	1.456	6.068	5.959	17.264
30	0.781	3.000	1.456	6.068	5.959	17.264

605

Table No. 9.21.11

Economic Costs of Running Vehicles.

(Without Improvement)

PAHARPUR SYSTEM

(Million Rs.)

DEVELOPMENT YEARS	MOTOR CYCLES	MOTOR CARS	PASSENGER BUSSES	TRUCKS	TRACTOR/ TRAILORS	TOTAL COST
0	0.775	1.542	2.419	2.431	2.836	10.022
1	0.858	1.588	2.540	2.552	2.978	10.516
2	0.927	1.635	2.667	2.680	3.126	11.036
3	1.001	1.685	2.801	2.814	3.283	11.583
4	1.081	1.735	2.941	2.954	3.447	12.159
5	1.168	1.787	3.088	3.102	3.619	12.764
6	1.261	1.841	3.242	3.257	3.800	13.402
7	1.362	1.896	3.404	3.420	3.990	14.073
8	1.471	1.953	3.575	3.591	4.190	14.780
9	1.589	2.011	3.753	3.771	4.399	15.524
10	1.716	2.072	3.941	3.959	4.619	16.307
11	1.853	2.134	4.138	4.157	4.850	17.133
12	2.002	2.198	4.345	4.365	5.093	18.002
13	2.162	2.264	4.562	4.583	5.347	18.918
14	2.335	2.332	4.790	4.813	5.615	19.884
15	2.521	2.402	5.030	5.053	5.895	20.902
16	2.723	2.474	5.281	5.306	6.190	21.974
17	2.941	2.548	5.546	5.571	6.500	23.105
18	3.176	2.624	5.823	5.850	6.825	24.298
19	3.430	2.703	6.114	6.142	7.166	25.555
20	3.705	2.784	6.420	6.449	7.524	26.882
21	3.705	2.784	6.420	6.449	7.524	26.882
22	3.705	2.784	6.420	6.449	7.524	26.882
23	3.705	2.784	6.420	6.449	7.524	26.882
24	3.705	2.784	6.420	6.449	7.524	26.882
25	3.705	2.784	6.420	6.449	7.524	26.882
26	3.705	2.784	6.420	6.449	7.524	26.882
27	3.705	2.784	6.420	6.449	7.524	26.882
28	3.705	2.784	6.420	6.449	7.524	26.882
29	3.705	2.784	6.420	6.449	7.524	26.882
30	3.705	2.784	6.420	6.449	7.524	26.882

606

Table No. 9.21.12

Economic Costs of Running Vehicles.

(Without Improvement)

MARWAT SYSTEM

(Million Rs.)

DEVELOPMENT YEARS	MOTOR CYCLES	MOTOR CARS	PASSENGER BUSSES	TRUCKS	TRACTOR/ TRAILORS	TOTAL COST
0	0.288	3.675	2.325	2.815	0.839	9.942
1	0.312	3.785	2.441	2.956	0.880	10.375
2	0.336	3.899	2.564	3.104	0.924	10.827
3	0.363	4.016	2.692	3.259	0.971	11.301
4	0.392	4.136	2.826	3.422	1.019	11.796
5	0.424	4.261	2.968	3.593	1.070	12.315
6	0.458	4.388	3.116	3.772	1.124	12.858
7	0.494	4.520	3.272	3.961	1.180	13.427
8	0.534	4.656	3.435	4.159	1.239	14.023
9	0.577	4.795	3.607	4.367	1.301	14.647
10	0.623	4.939	3.787	4.585	1.366	15.301
11	0.673	5.087	3.977	4.815	1.434	15.986
12	0.726	5.240	4.176	5.055	1.506	16.703
13	0.785	5.397	4.384	5.308	1.581	17.456
14	0.847	5.559	4.604	5.574	1.660	18.244
15	0.915	5.726	4.834	5.852	1.743	19.070
16	0.988	5.898	5.076	6.145	1.830	19.937
17	1.067	6.075	5.329	6.452	1.922	20.845
18	1.153	6.257	5.596	6.775	2.018	21.798
19	1.245	6.445	5.876	7.114	2.119	22.797
20	1.345	6.638	6.169	7.469	2.225	23.846
21	1.345	6.638	6.169	7.469	2.225	23.846
22	1.345	6.638	6.169	7.469	2.225	23.846
23	1.345	6.638	6.169	7.469	2.225	23.846
24	1.345	6.638	6.169	7.469	2.225	23.846
25	1.345	6.638	6.169	7.469	2.225	23.846
26	1.345	6.638	6.169	7.469	2.225	23.846
27	1.345	6.638	6.169	7.469	2.225	23.846
28	1.345	6.638	6.169	7.469	2.225	23.846
29	1.345	6.638	6.169	7.469	2.225	23.846
30	1.345	6.638	6.169	7.469	2.225	23.846

607

Table No. 9.21.13

Economic Costs of Running Vehicles.

(Without Improvement)

UPPER SWAT CANAL

(Million Rs.)

DEVELOPMENT YEARS	MOTOR CYCLES	MOTOR CARS	PASSENGER BUSSES	TRUCKS	TRACTOR/ TRAILORS	TOTAL COST
0	0.851	13.496	5.807	4.066	3.712	27.933
1	0.920	13.901	6.097	4.269	3.898	29.085
2	0.993	14.318	6.402	4.483	4.093	30.289
3	1.073	14.748	6.722	4.707	4.298	31.547
4	1.158	15.190	7.058	4.942	4.512	32.862
5	1.251	15.646	7.411	5.189	4.738	34.236
6	1.351	16.115	7.782	5.449	4.975	35.672
7	1.459	16.599	8.171	5.721	5.224	37.174
8	1.576	17.097	8.580	6.007	5.485	38.744
9	1.702	17.610	9.009	6.308	5.759	40.387
10	1.838	18.138	9.459	6.623	6.047	42.105
11	1.985	18.682	9.932	6.954	6.349	43.903
12	2.144	19.242	10.429	7.302	6.667	45.784
13	2.315	19.820	10.950	7.667	7.000	47.752
14	2.501	20.414	11.497	8.050	7.350	49.813
15	2.701	21.027	12.072	8.453	7.718	51.970
16	2.917	21.657	12.676	8.875	8.104	54.229
17	3.150	22.307	13.310	9.319	8.509	56.595
18	3.402	22.976	13.975	9.785	8.934	59.073
19	3.674	23.666	14.674	10.274	9.381	61.670
20	3.968	24.376	15.408	10.788	9.850	64.390
21	3.968	24.376	15.408	10.788	9.850	64.390
22	3.968	24.376	15.408	10.788	9.850	64.390
23	3.968	24.376	15.408	10.788	9.850	64.390
24	3.968	24.376	15.408	10.788	9.850	64.390
25	3.968	24.376	15.408	10.788	9.850	64.390
26	3.968	24.376	15.408	10.788	9.850	64.390
27	3.968	24.376	15.408	10.788	9.850	64.390
28	3.968	24.376	15.408	10.788	9.850	64.390
29	3.968	24.376	15.408	10.788	9.850	64.390
30	3.968	24.376	15.408	10.788	9.850	64.390

108

Table No. 9.22.1

Economic Costs of Running Vehicles.

(With Improvement)

JHANG SYSTEM

(Million Rs.)

DEVELOPMENT YEARS	MOTOR CYCLES	MOTOR CARS	PASSENGER BUSSES	TRUCKS	TRACTOR/ TRAILORS	TOTAL COST
0	1.866	8.877	12.244	19.794	5.656	48.438
1	1.362	6.178	9.559	15.631	4.466	37.197
2	1.471	6.364	10.037	16.413	4.689	38.974
3	1.589	6.555	10.539	17.233	4.924	40.839
4	1.716	6.751	11.066	18.095	5.170	42.798
5	1.853	6.954	11.619	19.000	5.428	44.854
6	2.001	7.162	12.200	19.950	5.700	47.013
7	2.161	7.377	12.810	20.947	5.985	49.281
8	2.334	7.598	13.451	21.994	6.284	51.662
9	2.521	7.826	14.124	23.094	6.598	54.163
10	2.722	8.061	14.830	24.249	6.928	56.790
11	2.940	8.303	15.571	25.461	7.275	59.550
12	3.175	8.552	16.350	26.734	7.638	62.450
13	3.429	8.809	17.167	28.071	8.020	65.497
14	3.704	9.073	18.026	29.475	8.421	68.698
15	4.000	9.345	18.927	30.948	8.842	72.063
16	4.320	9.626	19.873	32.496	9.285	75.599
17	4.666	9.914	20.867	34.121	9.749	79.316
18	5.039	10.212	21.910	35.827	10.236	83.224
19	5.442	10.518	23.006	37.618	10.748	87.332
20	5.877	10.834	24.156	39.499	11.285	91.651
21	5.877	10.834	24.156	39.499	11.285	91.651
22	5.877	10.834	24.156	39.499	11.285	91.651
23	5.877	10.834	24.156	39.499	11.285	91.651
24	5.877	10.834	24.156	39.499	11.285	91.651
25	5.877	10.834	24.156	39.499	11.285	91.651
26	5.877	10.834	24.156	39.499	11.285	91.651
27	5.877	10.834	24.156	39.499	11.285	91.651
28	5.877	10.834	24.156	39.499	11.285	91.651
29	5.877	10.834	24.156	39.499	11.285	91.651
30	5.877	10.834	24.156	39.499	11.285	91.651

Table No. 9.22.2

Economic Costs of Running Vehicles.

(With Improvement)

GOGERA SYSTEM

(Million Rs.)

DEVELOPMENT YEARS	MOTOR CYCLES	MOTOR CARS	PASSENGER BUSSES	TRUCKS	TRACTOR/ TRAILORS	TOTAL COST
0	3.236	5.548	4.423	2.777	5.369	21.352
1	2.362	3.861	3.453	2.193	4.240	16.108
2	2.550	3.977	3.626	2.303	4.452	16.907
3	2.755	4.096	3.807	2.418	4.674	17.749
4	2.975	4.219	3.997	2.539	4.908	18.637
5	3.213	4.346	4.197	2.665	5.153	19.574
6	3.470	4.476	4.407	2.799	5.411	20.562
7	3.747	4.610	4.627	2.939	5.681	21.605
8	4.047	4.748	4.859	3.086	5.965	22.705
9	4.371	4.891	5.102	3.240	6.264	23.867
10	4.721	5.038	5.357	3.402	6.577	25.094
11	5.098	5.189	5.624	3.572	6.906	26.389
12	5.506	5.344	5.906	3.751	7.251	27.758
13	5.947	5.505	6.201	3.938	7.614	29.204
14	6.423	5.670	6.511	4.135	7.994	30.733
15	6.936	5.840	6.837	4.342	8.394	32.349
16	7.491	6.015	7.178	4.559	8.814	34.057
17	8.091	6.196	7.537	4.787	9.254	35.865
18	8.738	6.382	7.914	5.026	9.717	37.777
19	9.437	6.573	8.310	5.277	10.203	39.800
20	10.192	6.770	8.725	5.541	10.713	41.942
21	10.192	6.770	8.725	5.541	10.713	41.942
22	10.192	6.770	8.725	5.541	10.713	41.942
23	10.192	6.770	8.725	5.541	10.713	41.942
24	10.192	6.770	8.725	5.541	10.713	41.942
25	10.192	6.770	8.725	5.541	10.713	41.942
26	10.192	6.770	8.725	5.541	10.713	41.942
27	10.192	6.770	8.725	5.541	10.713	41.942
28	10.192	6.770	8.725	5.541	10.713	41.942
29	10.192	6.770	8.725	5.541	10.713	41.942
30	10.192	6.770	8.725	5.541	10.713	41.942

610

Table No. 9.22.3

Economic Costs of Running Vehicles.

(With Improvement)

DEPALPUR SYSTEM

(Million Rs.)

DEVELOPMENT YEARS	MOTOR CYCLES	MOTOR CARS	PASSENGER BUSSES	TRUCKS	TRACTOR/ TRAILORS	TOTAL COST
0	6.692	14.413	15.081	13.467	14.910	64.564
1	4.883	10.031	11.774	10.635	11.774	49.097
2	5.274	10.332	12.363	11.166	12.363	51.498
3	5.696	10.642	12.981	11.725	12.981	54.024
4	6.152	10.961	13.630	12.311	13.630	56.684
5	6.644	11.290	14.312	12.927	14.312	59.483
6	7.175	11.629	15.027	13.573	15.027	62.431
7	7.749	11.977	15.778	14.252	15.778	65.535
8	8.369	12.337	16.567	14.964	16.567	68.805
9	9.039	12.707	17.396	15.712	17.396	72.249
10	9.762	13.088	18.266	16.498	18.266	75.879
11	10.543	13.481	19.179	17.323	19.179	79.704
12	11.386	13.885	20.138	18.189	20.138	83.736
13	12.297	14.302	21.145	19.098	21.145	87.986
14	13.281	14.731	22.202	20.053	22.202	92.469
15	14.343	15.173	23.312	21.056	23.312	97.196
16	15.491	15.628	24.478	22.109	24.478	102.182
17	16.730	16.097	25.701	23.214	25.701	107.444
18	18.068	16.580	26.987	24.375	26.987	112.996
19	19.514	17.077	28.336	25.594	28.336	118.856
20	21.075	17.589	29.753	26.873	29.753	125.043
21	21.075	17.589	29.753	26.873	29.753	125.043
22	21.075	17.589	29.753	26.873	29.753	125.043
23	21.075	17.589	29.753	26.873	29.753	125.043
24	21.075	17.589	29.753	26.873	29.753	125.043
25	21.075	17.589	29.753	26.873	29.753	125.043
26	21.075	17.589	29.753	26.873	29.753	125.043
27	21.075	17.589	29.753	26.873	29.753	125.043
28	21.075	17.589	29.753	26.873	29.753	125.043
29	21.075	17.589	29.753	26.873	29.753	125.043
30	21.075	17.589	29.753	26.873	29.753	125.043

611

Table No. 9.22.4

Economic Costs of Running Vehicles.

(With Improvement)

MAILSI SYSTEM

(Million Rs.)

DEVELOPMENT YEARS	MOTOR CYCLES	MOTOR CARS	PASSENGER BUSSES	TRUCKS	TRACTOR/ TRAILORS	TOTAL COST
0	4.988	10.778	11.997	6.428	6.749	40.940
1	3.640	7.501	9.366	5.076	5.330	30.913
2	3.931	7.726	9.835	5.330	5.596	32.418
3	4.245	7.958	10.326	5.596	5.876	34.002
4	4.585	8.196	10.843	5.876	6.170	35.670
5	4.952	8.442	11.385	6.170	6.478	37.427
6	5.348	8.696	11.954	6.478	6.802	39.278
7	5.776	8.956	12.552	6.802	7.142	41.229
8	6.238	9.225	13.180	7.142	7.500	43.284
9	6.737	9.502	13.838	7.500	7.875	45.451
10	7.276	9.787	14.530	7.875	8.268	47.736
11	7.858	10.081	15.257	8.268	8.682	50.145
12	8.486	10.383	16.020	8.682	9.116	52.687
13	9.165	10.694	16.821	9.116	9.572	55.368
14	9.899	11.015	17.662	9.572	10.050	58.197
15	10.690	11.346	18.545	10.050	10.553	61.184
16	11.546	11.686	19.472	10.553	11.080	64.337
17	12.469	12.037	20.446	11.080	11.634	67.666
18	13.467	12.398	21.468	11.634	12.216	71.183
19	14.544	12.770	22.541	12.216	12.827	74.898
20	15.708	13.153	23.668	12.827	13.468	78.824
21	15.708	13.153	23.668	12.827	13.468	78.824
22	15.708	13.153	23.668	12.827	13.468	78.824
23	15.708	13.153	23.668	12.827	13.468	78.824
24	15.708	13.153	23.668	12.827	13.468	78.824
25	15.708	13.153	23.668	12.827	13.468	78.824
26	15.708	13.153	23.668	12.827	13.468	78.824
27	15.708	13.153	23.668	12.827	13.468	78.824
28	15.708	13.153	23.668	12.827	13.468	78.824
29	15.708	13.153	23.668	12.827	13.468	78.824
30	15.708	13.153	23.668	12.827	13.468	78.824

612

Table No. 9.22.5

Economic Costs of Running Vehicles.

(With Improvement)

NASIR SYSTEM

(Million Rs.)

DEVELOPMENT YEARS	MOTOR CYCLES	MOTOR CARS	PASSENGER BUSSES	TRUCKS	TRACTOR/ TRAILORS	TOTAL COST
0	1.006	2.448	0.797	3.964	1.677	9.892
1	0.734	1.703	0.622	3.130	1.324	7.514
2	0.793	1.754	0.653	3.287	1.391	7.878
3	0.856	1.807	0.686	3.451	1.460	8.260
4	0.925	1.861	0.720	3.624	1.533	8.663
5	0.999	1.917	0.756	3.805	1.610	9.087
6	1.079	1.975	0.794	3.995	1.690	9.533
7	1.165	2.034	0.834	4.195	1.775	10.002
8	1.258	2.095	0.875	4.405	1.863	10.497
9	1.359	2.158	0.919	4.625	1.957	11.017
10	1.468	2.223	0.965	4.856	2.054	11.566
11	1.585	2.289	1.013	5.099	2.157	12.144
12	1.712	2.358	1.064	5.354	2.265	12.753
13	1.849	2.429	1.117	5.621	2.378	13.394
14	1.997	2.501	1.173	5.902	2.497	14.071
15	2.157	2.576	1.232	6.198	2.622	14.784
16	2.329	2.654	1.293	6.507	2.753	15.537
17	2.516	2.733	1.358	6.833	2.891	16.330
18	2.717	2.815	1.426	7.175	3.035	17.168
19	2.934	2.900	1.497	7.533	3.187	18.051
20	3.169	2.987	1.572	7.910	3.346	18.984
21	3.169	2.987	1.572	7.910	3.346	18.984
22	3.169	2.987	1.572	7.910	3.346	18.984
23	3.169	2.987	1.572	7.910	3.346	18.984
24	3.169	2.987	1.572	7.910	3.346	18.984
25	3.169	2.987	1.572	7.910	3.346	18.984
26	3.169	2.987	1.572	7.910	3.346	18.984
27	3.169	2.987	1.572	7.910	3.346	18.984
28	3.169	2.987	1.572	7.910	3.346	18.984
29	3.169	2.987	1.572	7.910	3.346	18.984
30	3.169	2.987	1.572	7.910	3.346	18.984

613

Table No. 9.22.6

Economic Costs of Running Vehicles.

(With Improvement)

JAMRAO & MITHRAO SYSTEM

(Million Rs.)

DEVELOPMENT YEARS	MOTOR CYCLES	MOTOR CARS	PASSENGER BUSSES	TRUCKS	TRACTOR/ TRAILORS	TOTAL COST
0	3.706	27.692	8.780	3.920	9.017	53.116
1	2.705	19.272	6.855	3.096	7.120	39.048
2	2.921	19.851	7.198	3.251	7.476	40.696
3	3.155	20.446	7.558	3.413	7.850	42.422
4	3.407	21.059	7.936	3.584	8.243	44.228
5	3.680	21.691	8.332	3.763	8.655	46.121
6	3.974	22.342	8.749	3.951	9.088	48.104
7	4.292	23.012	9.186	4.149	9.542	50.181
8	4.635	23.703	9.646	4.356	10.019	52.359
9	5.006	24.414	10.128	4.574	10.520	54.642
10	5.406	25.146	10.634	4.803	11.046	57.036
11	5.839	25.900	11.166	5.043	11.598	59.547
12	6.306	26.677	11.724	5.295	12.178	62.181
13	6.811	27.478	12.311	5.560	12.787	64.946
14	7.355	28.302	12.926	5.838	13.427	67.848
15	7.944	29.151	13.572	6.130	14.098	70.895
16	8.579	30.026	14.251	6.436	14.803	74.095
17	9.266	30.926	14.964	6.758	15.543	77.457
18	10.007	31.854	15.712	7.096	16.320	80.989
19	10.808	32.810	16.497	7.450	17.136	84.701
20	11.672	33.794	17.322	7.823	17.993	88.605
21	11.672	33.794	17.322	7.823	17.993	88.605
22	11.672	33.794	17.322	7.823	17.993	88.605
23	11.672	33.794	17.322	7.823	17.993	88.605
24	11.672	33.794	17.322	7.823	17.993	88.605
25	11.672	33.794	17.322	7.823	17.993	88.605
26	11.672	33.794	17.322	7.823	17.993	88.605
27	11.672	33.794	17.322	7.823	17.993	88.605
28	11.672	33.794	17.322	7.823	17.993	88.605
29	11.672	33.794	17.322	7.823	17.993	88.605
30	11.672	33.794	17.322	7.823	17.993	88.605

614

Table No. 9.22.7

Economic Costs of Running Vehicles.

(With Improvement)

GOTKI SYSTEM

(Million Rs.)

DEVELOPMENT YEARS	MOTOR CYCLES	MOTOR CARS	PASSENGER BUSSES	TRUCKS	TRACTOR/ TRAILORS	TOTAL COST
0	4.274	12.032	3.534	5.917	10.059	35.816
1	3.119	8.374	2.759	4.672	7.943	26.867
2	3.369	8.625	2.897	4.906	8.340	28.137
3	3.638	8.883	3.042	5.151	8.757	29.472
4	3.929	9.150	3.194	5.409	9.195	30.877
5	4.244	9.424	3.354	5.679	9.655	32.356
6	4.583	9.707	3.521	5.963	10.138	33.912
7	4.950	9.998	3.697	6.261	10.644	35.551
8	5.346	10.298	3.882	6.575	11.177	37.277
9	5.773	10.607	4.076	6.903	11.736	39.096
10	6.235	10.926	4.280	7.248	12.322	41.012
11	6.734	11.253	4.494	7.611	12.938	43.031
12	7.273	11.591	4.719	7.991	13.585	45.159
13	7.855	11.939	4.955	8.391	14.265	47.404
14	8.483	12.297	5.202	8.810	14.978	49.771
15	9.162	12.666	5.463	9.251	15.727	52.268
16	9.895	13.046	5.736	9.714	16.513	54.903
17	10.686	13.437	6.022	10.199	17.339	57.684
18	11.541	13.840	6.324	10.709	18.206	60.620
19	12.464	14.255	6.640	11.245	19.116	63.720
20	13.462	14.683	6.972	11.807	20.072	66.995
21	13.462	14.683	6.972	11.807	20.072	66.995
22	13.462	14.683	6.972	11.807	20.072	66.995
23	13.462	14.683	6.972	11.807	20.072	66.995
24	13.462	14.683	6.972	11.807	20.072	66.995
25	13.462	14.683	6.972	11.807	20.072	66.995
26	13.462	14.683	6.972	11.807	20.072	66.995
27	13.462	14.683	6.972	11.807	20.072	66.995
28	13.462	14.683	6.972	11.807	20.072	66.995
29	13.462	14.683	6.972	11.807	20.072	66.995
30	13.462	14.683	6.972	11.807	20.072	66.995

615

Table No. 9.22.8

Economic Costs of Running Vehicles.

(With Improvement)

ROHRI SYSTEM

(Million Rs.)

DEVELOPMENT YEARS	MOTOR CYCLES	MOTOR CARS	PASSENGER BUSSES	TRUCKS	TRACTOR/ TRAILORS	TOTAL COST
0	1.768	5.562	2.565	3.039	3.964	16.898
1	1.290	3.871	2.002	2.400	3.130	12.693
2	1.393	3.987	2.102	2.520	3.287	13.289
3	1.505	4.107	2.208	2.646	3.451	13.916
4	1.625	4.230	2.318	2.778	3.624	14.575
5	1.755	4.357	2.434	2.917	3.805	15.268
6	1.895	4.488	2.556	3.063	3.995	15.996
7	2.047	4.622	2.683	3.216	4.195	16.763
8	2.211	4.761	2.818	3.377	4.405	17.570
9	2.388	4.904	2.958	3.546	4.625	18.420
10	2.579	5.051	3.106	3.723	4.856	19.315
11	2.785	5.202	3.262	3.909	5.099	20.257
12	3.008	5.358	3.425	4.105	5.354	21.249
13	3.248	5.519	3.596	4.310	5.621	22.295
14	3.508	5.685	3.776	4.525	5.902	23.396
15	3.789	5.855	3.965	4.752	6.198	24.558
16	4.092	6.031	4.163	4.989	6.507	25.782
17	4.419	6.212	4.371	5.239	6.833	27.073
18	4.773	6.398	4.589	5.500	7.175	28.435
19	5.155	6.590	4.819	5.775	7.533	29.872
20	5.567	6.788	5.060	6.064	7.910	31.389
21	5.567	6.788	5.060	6.064	7.910	31.389
22	5.567	6.788	5.060	6.064	7.910	31.389
23	5.567	6.788	5.060	6.064	7.910	31.389
24	5.567	6.788	5.060	6.064	7.910	31.389
25	5.567	6.788	5.060	6.064	7.910	31.389
26	5.567	6.788	5.060	6.064	7.910	31.389
27	5.567	6.788	5.060	6.064	7.910	31.389
28	5.567	6.788	5.060	6.064	7.910	31.389
29	5.567	6.788	5.060	6.064	7.910	31.389
30	5.567	6.788	5.060	6.064	7.910	31.389

616

Table No. 9.22.11

Economic Costs of Running Vehicles.

(With Improvement)

PAHARPUR SYSTEM

(Million Rs.)

DEVELOPMENT YEARS	MOTOR CYCLES	MOTOR CARS	PASSENGER BUSSES	TRUCKS	TRACTOR/ TRAILORS	TOTAL COST
0	0.795	1.542	2.419	2.431	2.836	10.022
1	0.580	1.073	1.889	1.919	2.239	7.701
2	0.626	1.105	1.983	2.015	2.351	8.082
3	0.677	1.138	2.083	2.116	2.469	8.482
4	0.731	1.172	2.187	2.222	2.592	8.904
5	0.789	1.207	2.296	2.333	2.722	9.348
6	0.852	1.244	2.411	2.450	2.858	9.815
7	0.920	1.281	2.531	2.572	3.001	10.306
8	0.994	1.319	2.658	2.701	3.151	10.823
9	1.074	1.359	2.791	2.836	3.308	11.368
10	1.160	1.400	2.930	2.978	3.474	11.941
11	1.252	1.442	3.077	3.127	3.648	12.545
12	1.352	1.485	3.231	3.283	3.830	13.181
13	1.461	1.530	3.392	3.447	4.021	13.851
14	1.577	1.576	3.562	3.619	4.223	14.557
15	1.704	1.623	3.740	3.800	4.434	15.300
16	1.840	1.671	3.927	3.990	4.655	16.084
17	1.987	1.722	4.123	4.190	4.888	16.910
18	2.146	1.773	4.329	4.399	5.133	17.781
19	2.318	1.826	4.546	4.619	5.389	18.699
20	2.503	1.881	4.773	4.850	5.659	19.667
21	2.503	1.881	4.773	4.850	5.659	19.667
22	2.503	1.881	4.773	4.850	5.659	19.667
23	2.503	1.881	4.773	4.850	5.659	19.667
24	2.503	1.881	4.773	4.850	5.659	19.667
25	2.503	1.881	4.773	4.850	5.659	19.667
26	2.503	1.881	4.773	4.850	5.659	19.667
27	2.503	1.881	4.773	4.850	5.659	19.667
28	2.503	1.881	4.773	4.850	5.659	19.667
29	2.503	1.881	4.773	4.850	5.659	19.667
30	2.503	1.881	4.773	4.850	5.659	19.667

617

Table No. 9.22.12

Economic Costs of Running Vehicles.

(With Improvement)

MARWAT SYSTEM

(Million Rs.)

DEVELOPMENT YEARS	MOTOR CYCLES	MOTOR CARS	PASSENGER BUSSES	TRUCKS	TRACTOR/ TRAILORS	TOTAL COST
0	0.288	3.675	2.325	2.815	0.839	9.942
1	0.210	2.558	1.815	2.223	0.662	7.469
2	0.227	2.634	1.906	2.334	0.695	7.797
3	0.246	2.714	2.001	2.451	0.730	8.141
4	0.265	2.795	2.101	2.573	0.767	8.501
5	0.286	2.879	2.207	2.702	0.805	8.879
6	0.309	2.965	2.317	2.837	0.845	9.274
7	0.334	3.054	2.433	2.979	0.887	9.687
8	0.361	3.146	2.554	3.128	0.932	10.120
9	0.390	3.240	2.682	3.284	0.978	10.574
10	0.421	3.337	2.816	3.449	1.027	11.050
11	0.454	3.437	2.957	3.621	1.079	11.548
12	0.491	3.541	3.105	3.802	1.133	12.071
13	0.530	3.647	3.260	3.992	1.189	12.618
14	0.572	3.756	3.423	4.192	1.249	13.192
15	0.618	3.869	3.594	4.401	1.311	13.794
16	0.668	3.985	3.774	4.621	1.377	14.425
17	0.721	4.104	3.963	4.852	1.445	15.086
18	0.779	4.228	4.161	5.095	1.518	15.780
19	0.841	4.354	4.369	5.350	1.594	16.508
20	0.908	4.485	4.587	5.617	1.673	17.271
21	0.908	4.485	4.587	5.617	1.673	17.271
22	0.908	4.485	4.587	5.617	1.673	17.271
23	0.908	4.485	4.587	5.617	1.673	17.271
24	0.908	4.485	4.587	5.617	1.673	17.271
25	0.908	4.485	4.587	5.617	1.673	17.271
26	0.908	4.485	4.587	5.617	1.673	17.271
27	0.908	4.485	4.587	5.617	1.673	17.271
28	0.908	4.485	4.587	5.617	1.673	17.271
29	0.908	4.485	4.587	5.617	1.673	17.271
30	0.908	4.485	4.587	5.617	1.673	17.271

618

Table No. 9.22.9

Economic Costs of Running Vehicles.

(With Improvement)

DADU SYSTEM

(Million Rs.)

DEVELOPMENT YEARS	MOTOR CYCLES	MOTOR CARS	PASSENGER BUSSES	TRUCKS	TRACTOR/ TRAILORS	TOTAL COST
0	0.910	9.055	1.648	5.104	3.586	20.303
1	0.664	6.302	1.286	4.030	2.832	15.115
2	0.717	6.491	1.351	4.232	2.974	15.764
3	0.775	6.685	1.418	4.443	3.122	16.444
4	0.837	6.886	1.489	4.666	3.279	17.156
5	0.904	7.092	1.564	4.899	3.442	17.901
6	0.976	7.305	1.642	5.144	3.615	18.681
7	1.054	7.524	1.724	5.401	3.795	19.499
8	1.139	7.750	1.810	5.671	3.985	20.355
9	1.230	7.983	1.901	5.955	4.184	21.252
10	1.328	8.222	1.996	6.252	4.394	22.192
11	1.434	8.469	2.095	6.565	4.613	23.176
12	1.549	8.723	2.200	6.893	4.844	24.209
13	1.673	8.984	2.310	7.238	5.086	25.291
14	1.807	9.254	2.426	7.600	5.340	26.426
15	1.951	9.532	2.547	7.980	5.607	27.617
16	2.107	9.818	2.674	8.379	5.888	28.866
17	2.276	10.112	2.808	8.798	6.182	30.176
18	2.458	10.415	2.948	9.238	6.491	31.551
19	2.655	10.728	3.096	9.699	6.816	32.994
20	2.867	11.050	3.251	10.184	7.157	34.508
21	2.867	11.050	3.251	10.184	7.157	34.508
22	2.867	11.050	3.251	10.184	7.157	34.508
23	2.867	11.050	3.251	10.184	7.157	34.508
24	2.867	11.050	3.251	10.184	7.157	34.508
25	2.867	11.050	3.251	10.184	7.157	34.508
26	2.867	11.050	3.251	10.184	7.157	34.508
27	2.867	11.050	3.251	10.184	7.157	34.508
28	2.867	11.050	3.251	10.184	7.157	34.508
29	2.867	11.050	3.251	10.184	7.157	34.508
30	2.867	11.050	3.251	10.184	7.157	34.508

619

Table No. 9.22.10

Economic Costs of Running Vehicles.

(With Improvement)

KABUL SYSTEM

(Million Rs.)

DEVELOPMENT YEARS	MOTOR CYCLES	MOTOR CARS	PASSENGER BUSSES	TRUCKS	TRACTOR/ TRAILORS	TOTAL COST
0	0.168	1.661	0.549	2.287	2.246	6.910
1	0.122	1.156	0.428	1.806	1.774	5.286
2	0.132	1.191	0.450	1.896	1.862	5.531
3	0.143	1.226	0.472	1.991	1.955	5.788
4	0.154	1.263	0.496	2.091	2.053	6.057
5	0.166	1.301	0.521	2.195	2.156	6.339
6	0.180	1.340	0.547	2.305	2.264	6.635
7	0.194	1.380	0.574	2.420	2.377	6.945
8	0.210	1.422	0.603	2.541	2.496	7.271
9	0.226	1.464	0.633	2.668	2.620	7.612
10	0.244	1.508	0.665	2.802	2.752	7.970
11	0.264	1.553	0.698	2.942	2.889	8.346
12	0.285	1.600	0.733	3.089	3.034	8.740
13	0.308	1.648	0.769	3.243	3.185	9.154
14	0.332	1.697	0.808	3.405	3.344	9.588
15	0.359	1.748	0.848	3.576	3.512	10.043
16	0.388	1.801	0.891	3.754	3.687	10.521
17	0.419	1.855	0.935	3.942	3.872	11.023
18	0.452	1.910	0.982	4.139	4.065	11.549
19	0.489	1.968	1.031	4.346	4.268	12.102
20	0.528	2.027	1.083	4.563	4.482	12.682
21	0.528	2.027	1.083	4.563	4.482	12.682
22	0.528	2.027	1.083	4.563	4.482	12.682
23	0.528	2.027	1.083	4.563	4.482	12.682
24	0.528	2.027	1.083	4.563	4.482	12.682
25	0.528	2.027	1.083	4.563	4.482	12.682
26	0.528	2.027	1.083	4.563	4.482	12.682
27	0.528	2.027	1.083	4.563	4.482	12.682
28	0.528	2.027	1.083	4.563	4.482	12.682
29	0.528	2.027	1.083	4.563	4.482	12.682
30	0.528	2.027	1.083	4.563	4.482	12.682

620

Table No. 9.22.13

Economic Costs of Running Vehicles.

(With Improvement)

UPPER SWAT SYSTEM

(Million Rs.)

DEVELOPMENT YEARS	MOTOR CYCLES	MOTOR CARS	PASSENGER BUSSES	TRUCKS	TRACTOR/ TRAILORS	TOTAL COST
0	0.851	13.496	5.807	4.066	3.712	27.933
1	0.621	9.393	4.534	3.211	2.932	20.690
2	0.671	9.674	4.760	3.371	3.078	21.555
3	0.725	9.965	4.998	3.540	3.232	22.460
4	0.783	10.264	5.248	3.717	3.394	23.405
5	0.845	10.572	5.511	3.903	3.563	24.393
6	0.913	10.889	5.786	4.098	3.742	25.427
7	0.986	11.215	6.075	4.303	3.929	26.508
8	1.065	11.552	6.379	4.518	4.125	27.639
9	1.150	11.898	6.698	4.744	4.331	28.822
10	1.242	12.255	7.033	4.981	4.548	30.059
11	1.341	12.623	7.385	5.230	4.775	31.354
12	1.449	13.002	7.754	5.492	5.014	32.710
13	1.565	13.392	8.142	5.766	5.265	34.129
14	1.690	13.793	8.549	6.054	5.528	35.614
15	1.825	14.207	8.976	6.357	5.804	37.170
16	1.971	14.633	9.425	6.675	6.095	38.799
17	2.129	15.072	9.896	7.009	6.399	40.505
18	2.299	15.525	10.391	7.359	6.719	42.293
19	2.483	15.990	10.911	7.727	7.055	44.166
20	2.681	16.470	11.456	8.113	7.408	46.129
21	2.681	16.470	11.456	8.113	7.408	46.129
22	2.681	16.470	11.456	8.113	7.408	46.129
23	2.681	16.470	11.456	8.113	7.408	46.129
24	2.681	16.470	11.456	8.113	7.408	46.129
25	2.681	16.470	11.456	8.113	7.408	46.129
26	2.681	16.470	11.456	8.113	7.408	46.129
27	2.681	16.470	11.456	8.113	7.408	46.129
28	2.681	16.470	11.456	8.113	7.408	46.129
29	2.681	16.470	11.456	8.113	7.408	46.129
30	2.681	16.470	11.456	8.113	7.408	46.129

621

Table No. 9.23.1

BENEFITS FROM V.O.C. SAVING

JHANG IRRIGATION SYSTEM

(Rupees in Millions)

Years of Development	Economic Cost of Running Vehicles: Without Improvement	Economic Cost of Running Vehicles: With Improvement	Net Saving	Project* Benefits
0	48.438	48.438	0.000	0.000
1	50.738	37.197	13.542	0.000
2	53.153	38.974	14.179	2.127
3	55.687	40.839	14.848	5.197
4	58.348	42.798	15.551	9.330
5	61.142	44.854	16.288	13.845
6	64.076	47.013	17.062	17.062
7	67.156	49.281	17.876	17.876
8	70.392	51.662	18.730	18.730
9	73.790	54.163	19.627	19.627
10	77.360	56.790	20.569	20.569
11	81.110	59.550	21.560	21.560
12	85.050	62.450	22.600	22.600
13	89.191	65.497	23.694	23.694
14	93.542	68.698	24.843	24.843
15	98.115	72.063	26.052	26.052
16	102.921	75.599	27.322	27.322
17	107.974	79.316	28.658	28.658
18	113.287	83.224	30.063	30.063
19	118.873	87.332	31.541	31.541
20	124.746	91.651	33.095	33.095
21	124.746	91.651	33.095	33.095
22	124.746	91.651	33.095	33.095
23	124.746	91.651	33.095	33.095
24	124.746	91.651	33.095	33.095
25	124.746	91.651	33.095	33.095
26	124.746	91.651	33.095	33.095
27	124.746	91.651	33.095	33.095
28	124.746	91.651	33.095	33.095
29	124.746	91.651	33.095	33.095
30	124.746	91.651	33.095	33.095

* Project Benefits have been phased according to construction schedule of 15%, 20%, 25%, 25% and 15% commencing from the year following completion.

1027

Table No. 9.23.2

BENEFITS FROM V.O.C. SAVING

GOGERA IRRIGATION SYSTEM

(Rupees in Millions)

Years of Development	Economic Cost of Running Vehicles: Without Improvement	Economic Cost of Running Vehicles: With Improvement	Net Saving	Project* Benefits
0	21.352	21.352	0.000	0.000
1	22.406	16.108	6.298	0.000
2	23.517	16.907	6.610	0.992
3	24.688	17.749	6.939	2.429
4	25.924	18.637	7.287	4.372
5	27.227	19.574	7.653	6.505
6	28.603	20.562	8.040	8.040
7	30.054	21.605	8.449	8.449
8	31.587	22.705	8.882	8.882
9	33.206	23.867	9.338	9.338
10	34.915	25.094	9.821	9.821
11	36.721	26.389	10.332	10.332
12	38.630	27.758	10.872	10.872
13	40.648	29.204	11.444	11.444
14	42.782	30.733	12.049	12.049
15	45.038	32.349	12.689	12.689
16	47.425	34.057	13.368	13.368
17	49.951	35.865	14.086	14.086
18	52.624	37.777	14.847	14.847
19	55.454	39.800	15.654	15.654
20	58.452	41.942	16.510	16.510
21	58.452	41.942	16.510	16.510
22	58.452	41.942	16.510	16.510
23	58.452	41.942	16.510	16.510
24	58.452	41.942	16.510	16.510
25	58.452	41.942	16.510	16.510
26	58.452	41.942	16.510	16.510
27	58.452	41.942	16.510	16.510
28	58.452	41.942	16.510	16.510
29	58.452	41.942	16.510	16.510
30	58.452	41.942	16.510	16.510

* Project Benefits have been phased according to construction schedule of 15%, 20%, 25%, 25% and 15% commencing from the year following completion.

623

Table No. 9.23.3

BENEFITS FROM V.O.C. SAVING

DEPALPUR IRRIGATION SYSTEM

(Rupees in Millions)

Years of Development	Economic Cost of Running Vehicles		Net Saving	Project* Benefits
	Without Improvement	With Improvement		
0	64.564	64.564	0.000	0.000
1	67.705	49.097	18.607	0.000
2	71.010	51.498	19.512	2.927
3	74.489	54.024	20.464	7.162
4	78.151	56.684	21.467	12.880
5	82.007	59.483	22.524	19.145
6	86.068	62.431	23.637	23.637
7	90.346	65.535	24.811	24.811
8	94.853	68.805	26.048	26.048
9	99.602	72.249	27.353	27.353
10	104.607	75.879	28.728	28.728
11	109.884	79.704	30.180	30.180
12	115.447	83.736	31.711	31.711
13	121.314	87.986	33.327	33.327
14	127.502	92.469	35.034	35.034
15	134.031	97.196	36.835	36.835
16	140.920	102.182	38.738	38.738
17	148.191	107.444	40.748	40.748
18	155.867	112.996	42.871	42.871
19	163.972	118.856	45.116	45.116
20	172.532	125.043	47.489	47.489
21	172.532	125.043	47.489	47.489
22	172.532	125.043	47.489	47.489
23	172.532	125.043	47.489	47.489
24	172.532	125.043	47.489	47.489
25	172.532	125.043	47.489	47.489
26	172.532	125.043	47.489	47.489
27	172.532	125.043	47.489	47.489
28	172.532	125.043	47.489	47.489
29	172.532	125.043	47.489	47.489
30	172.532	125.043	47.489	47.489

* Project Benefits have been phased according to construction schedule of 15%, 20%, 25%, 25% and 15% commencing from the year following completion.

Table No. 9.23.4

BENEFITS FROM V.O.C. SAVING

MAILSI IRRIGATION SYSTEM

(Rupees in Millions)

Years of Development	Economic Cost of Running Vehicles		Net Saving	Project* Benefits
	Without Improvement	With Improvement		
0	40.940	40.940	0.000	0.000
1	42.921	30.913	12.009	0.000
2	45.007	32.418	12.589	1.888
3	47.203	34.002	13.201	4.620
4	49.516	35.670	13.846	8.308
5	51.953	37.427	14.526	12.347
6	54.521	39.278	15.242	15.242
7	57.227	41.229	15.998	15.998
8	60.079	43.284	16.795	16.795
9	63.087	45.451	17.636	17.636
10	66.259	47.736	18.524	18.524
11	69.606	50.145	19.461	19.461
12	73.137	52.687	20.450	20.450
13	76.863	55.368	21.495	21.495
14	80.796	58.197	22.599	22.599
15	84.950	61.184	23.766	23.766
16	89.336	64.337	24.999	24.999
17	93.969	67.666	26.303	26.303
18	98.865	71.183	27.682	27.682
19	104.039	74.898	29.141	29.141
20	109.509	78.824	30.685	30.685
21	109.509	78.824	30.685	30.685
22	109.509	78.824	30.685	30.685
23	109.509	78.824	30.685	30.685
24	109.509	78.824	30.685	30.685
25	109.509	78.824	30.685	30.685
26	109.509	78.824	30.685	30.685
27	109.509	78.824	30.685	30.685
28	109.509	78.824	30.685	30.685
29	109.509	78.824	30.685	30.685
30	109.509	78.824	30.685	30.685

* Project Benefits have been phased according to construction schedule of 15%, 20%, 25%, 25% and 15% commencing from the year following completion.

625

Table No. 9.23.5

BENEFITS FROM V.O.C. SAVING

NASIR IRRIGATION SYSTEM

(Rupees in Millions)

Years of Development	Economic Cost of Running Vehicles		Net Saving	Project* Benefits
	Without Improvement	With Improvement		
0	9.892	9.892	0.000	0.000
1	10.367	7.514	2.853	0.000
2	10.868	7.878	2.990	0.449
3	11.395	8.260	3.134	1.097
4	11.949	8.663	3.286	1.971
5	12.532	9.087	3.446	2.929
6	13.146	9.533	3.614	3.614
7	13.793	10.002	3.791	3.791
8	14.474	10.497	3.978	3.978
9	15.192	11.017	4.175	4.175
10	15.948	11.566	4.382	4.382
11	16.745	12.144	4.601	4.601
12	17.585	12.753	4.832	4.832
13	18.470	13.394	5.076	5.076
14	19.404	14.071	5.333	5.333
15	20.389	14.784	5.604	5.604
16	21.428	15.537	5.891	5.891
17	22.524	16.330	6.193	6.193
18	23.681	17.168	6.513	6.513
19	24.902	18.051	6.851	6.851
20	26.192	18.984	7.208	7.208
21	26.192	18.984	7.208	7.208
22	26.192	18.984	7.208	7.208
23	26.192	18.984	7.208	7.208
24	26.192	18.984	7.208	7.208
25	26.192	18.984	7.208	7.208
26	26.192	18.984	7.208	7.208
27	26.192	18.984	7.208	7.208
28	26.192	18.984	7.208	7.208
29	26.192	18.984	7.208	7.208
30	26.192	18.984	7.208	7.208

* Project Benefits have been phased according to construction schedule of 15%, 20%, 25%, 25% and 15% commencing from the year following completion.

626

Table No. 9.23.6

BENEFITS FROM V.O.C. SAVING

JAMRAO & MITHRAO IRRIGATION SYSTEM

(Rupees in Millions)

Years of Development	Economic Cost of Running Vehicles		Net Saving	Project* Benefits
	Without Improvement	With Improvement		
0	53.116	53.116	0.000	0.000
1	55.329	39.048	16.281	0.000
2	57.646	40.696	16.949	2.542
3	60.070	42.422	17.648	6.177
4	62.608	44.228	18.380	11.028
5	65.267	46.121	19.146	16.274
6	68.051	48.104	19.948	19.948
7	70.969	50.181	20.788	20.788
8	74.027	52.359	21.668	21.668
9	77.232	54.642	22.591	22.591
10	80.594	57.036	23.558	23.558
11	84.119	59.547	24.572	24.572
12	87.818	62.181	25.636	25.636
13	91.699	64.946	26.753	26.753
14	95.773	67.848	27.925	27.925
15	100.050	70.895	29.155	29.155
16	104.543	74.095	30.448	30.448
17	109.262	77.457	31.805	31.805
18	114.221	80.989	33.232	33.232
19	119.433	84.701	34.732	34.732
20	124.914	88.605	36.309	36.309
21	124.914	88.605	36.309	36.309
22	124.914	88.605	36.309	36.309
23	124.914	88.605	36.309	36.309
24	124.914	88.605	36.309	36.309
25	124.914	88.605	36.309	36.309
26	124.914	88.605	36.309	36.309
27	124.914	88.605	36.309	36.309
28	124.914	88.605	36.309	36.309
29	124.914	88.605	36.309	36.309
30	124.914	88.605	36.309	36.309

* Project Benefits have been phased according to construction schedule of 15%, 20%, 25%, 25% and 15% commencing from the year following completion.

627

Table No. 9.23.7

BENEFITS FROM V.O.C. SAVING

GOTKI FEEDER IRRIGATION SYSTEM

(Rupees in Millions)

Years of Development	Economic Cost of Running Vehicles		Net Saving	Project* Benefits
	Without Improvement	With Improvement		
0	35.816	35.816	0.000	0.000
1	37.494	26.867	10.627	0.000
2	39.260	28.137	11.123	1.668
3	41.117	29.472	11.645	4.076
4	43.071	30.877	12.194	7.316
5	45.128	32.356	12.773	10.857
6	47.294	33.912	13.382	13.382
7	49.575	35.551	14.024	14.024
8	51.978	37.277	14.700	14.700
9	54.509	39.096	15.413	15.413
10	57.177	41.012	16.165	16.165
11	59.989	43.031	16.959	16.959
12	62.955	45.159	17.795	17.795
13	66.082	47.404	18.679	18.679
14	69.382	49.771	19.611	19.611
15	72.863	52.268	20.596	20.596
16	76.538	54.903	21.636	21.636
17	80.418	57.684	22.735	22.735
18	84.516	60.620	23.896	23.896
19	88.845	63.720	25.125	25.125
20	93.418	66.995	26.423	26.423
21	93.418	66.995	26.423	26.423
22	93.418	66.995	26.423	26.423
23	93.418	66.995	26.423	26.423
24	93.418	66.995	26.423	26.423
25	93.418	66.995	26.423	26.423
26	93.418	66.995	26.423	26.423
27	93.418	66.995	26.423	26.423
28	93.418	66.995	26.423	26.423
29	93.418	66.995	26.423	26.423
30	93.418	66.995	26.423	26.423

* Project Benefits have been phased according to construction schedule of 15%, 20%, 25%, 25% and 15% commencing from the year following completion.

1.28

Table No. 9.23.8

BENEFITS FROM V.O.C. SAVING

ROHRI IRRIGATION SYSTEM

(Rupees in Millions)

Years of Development	Economic Cost of Running Vehicles		Net Saving	Project* Benefits
	Without Improvement	With Improvement		
0	16.898	16.898	0.000	0.000
1	17.684	12.693	4.991	0.000
2	18.511	13.289	5.222	0.783
3	19.381	13.916	5.465	1.913
4	20.295	14.575	5.720	3.432
5	21.257	15.268	5.989	5.091
6	22.268	15.996	6.272	6.272
7	23.333	16.763	6.570	6.570
8	24.454	17.570	6.883	6.883
9	25.634	18.420	7.214	7.214
10	26.876	19.315	7.562	7.562
11	28.185	20.257	7.928	7.928
12	29.564	21.249	8.315	8.315
13	31.017	22.295	8.723	8.723
14	32.549	23.396	9.153	9.153
15	34.164	24.558	9.606	9.606
16	35.867	25.782	10.085	10.085
17	37.663	27.073	10.590	10.590
18	39.559	28.435	11.124	11.124
19	41.559	29.872	11.687	11.687
20	43.671	31.389	12.282	12.282
21	43.671	31.389	12.282	12.282
22	43.671	31.389	12.282	12.282
23	43.671	31.389	12.282	12.282
24	43.671	31.389	12.282	12.282
25	43.671	31.389	12.282	12.282
26	43.671	31.389	12.282	12.282
27	43.671	31.389	12.282	12.282
28	43.671	31.389	12.282	12.282
29	43.671	31.389	12.282	12.282
30	43.671	31.389	12.282	12.282

* Project Benefits have been phased according to construction schedule of 15%, 20%, 25%, 25% and 15% commencing from the year following completion.

629

Table No. 9.23.9

BENEFITS FROM V.O.C. SAVING

DADU IRRIGATION SYSTEM

(Rupees in Millions)

Years of Development	Economic Cost of Running Vehicles		Net Saving	Project* Benefits
	Without Improvement	With Improvement		
0	20.303	20.303	0.000	0.000
1	21.164	15.115	6.050	0.000
2	22.065	15.764	6.301	0.945
3	23.008	16.444	6.564	2.297
4	23.995	17.156	6.839	4.104
5	25.029	17.901	7.127	6.058
6	26.110	18.681	7.429	7.429
7	27.243	19.499	7.744	7.744
8	28.429	20.355	8.074	8.074
9	29.672	21.252	8.420	8.420
10	30.973	22.192	8.782	8.782
11	32.338	23.176	9.161	9.161
12	33.768	24.209	9.559	9.559
13	35.267	25.291	9.975	9.975
14	36.838	26.426	10.412	10.412
15	38.486	27.617	10.870	10.870
16	40.215	28.866	11.350	11.350
17	42.029	30.176	11.853	11.853
18	43.932	31.551	12.382	12.382
19	45.930	32.994	12.936	12.936
20	48.026	34.508	13.518	13.518
21	48.026	34.508	13.518	13.518
22	48.026	34.508	13.518	13.518
23	48.026	34.508	13.518	13.518
24	48.026	34.508	13.518	13.518
25	48.026	34.508	13.518	13.518
26	48.026	34.508	13.518	13.518
27	48.026	34.508	13.518	13.518
28	48.026	34.508	13.518	13.518
29	48.026	34.508	13.518	13.518
30	48.026	34.508	13.518	13.518

* Project Benefits have been phased according to construction schedule of 15%, 20%, 25%, 25% and 15% commencing from the year following completion.

Table No. 9.23.10

BENEFITS FROM V.O.C. SAVING

KABUL RIVER IRRIGATION SYSTEM

(Rupees in Millions)

Years of Development	Economic Cost of Running Vehicles		Net Saving	Project* Benefits
	Without Improvement	With Improvement		
0	6.910	6.910	0.000	0.000
1	7.227	5.286	1.941	0.000
2	7.560	5.531	2.029	0.304
3	7.909	5.788	2.121	0.742
4	8.274	6.057	2.217	1.330
5	8.657	6.339	2.318	1.971
6	9.059	6.635	2.424	2.424
7	9.480	6.945	2.535	2.535
8	9.922	7.271	2.651	2.651
9	10.385	7.612	2.773	2.773
10	10.871	7.970	2.901	2.901
11	11.381	8.346	3.035	3.035
12	11.916	8.740	3.176	3.176
13	12.477	9.154	3.323	3.323
14	13.066	9.588	3.478	3.478
15	13.684	10.043	3.641	3.641
16	14.332	10.521	3.811	3.811
17	15.012	11.023	3.990	3.990
18	15.727	11.549	4.178	4.178
19	16.477	12.102	4.375	4.375
20	17.264	12.682	4.582	4.582
21	17.264	12.682	4.582	4.582
22	17.264	12.682	4.582	4.582
23	17.264	12.682	4.582	4.582
24	17.264	12.682	4.582	4.582
25	17.264	12.682	4.582	4.582
26	17.264	12.682	4.582	4.582
27	17.264	12.682	4.582	4.582
28	17.264	12.682	4.582	4.582
29	17.264	12.682	4.582	4.582
30	17.264	12.682	4.582	4.582

* Project Benefits have been phased according to construction schedule of 15%, 20%, 25%, 25% and 15% commencing from the year following completion.

Table No. 9.23.11

BENEFITS FROM V.O.C. SAVING

PAHARPUR IRRIGATION SYSTEM

(Rupees in Millions)

Years of Development	Economic Cost of Running Vehicles		Net Saving	Project* Benefits
	Without Improvement	With Improvement		
0	10.022	10.022	0.000	0.000
1	10.516	7.701	2.816	0.000
2	11.036	8.082	2.955	0.443
3	11.583	8.482	3.101	1.085
4	12.159	8.904	3.255	1.953
5	12.764	9.348	3.417	2.904
6	13.402	9.815	3.587	3.587
7	14.073	10.306	3.767	3.767
8	14.780	10.823	3.956	3.956
9	15.524	11.368	4.156	4.156
10	16.307	11.941	4.366	4.366
11	17.133	12.545	4.588	4.588
12	18.002	13.181	4.821	4.821
13	18.918	13.851	5.067	5.067
14	19.884	14.557	5.327	5.327
15	20.902	15.300	5.601	5.601
16	21.974	16.084	5.890	5.890
17	23.105	16.910	6.195	6.195
18	24.298	17.781	6.517	6.517
19	25.555	18.699	6.857	6.857
20	26.882	19.667	7.215	7.215
21	26.882	19.667	7.215	7.215
22	26.882	19.667	7.215	7.215
23	26.882	19.667	7.215	7.215
24	26.882	19.667	7.215	7.215
25	26.882	19.667	7.215	7.215
26	26.882	19.667	7.215	7.215
27	26.882	19.667	7.215	7.215
28	26.882	19.667	7.215	7.215
29	26.882	19.667	7.215	7.215
30	26.882	19.667	7.215	7.215

* Project Benefits have been phased according to construction schedule of 15%, 20%, 25%, 25% and 15% commencing from the year following completion.

632

Table No. 9.23.12

BENEFITS FROM V.O.C. SAVING

MARWAT IRRIGATION SYSTEM

(Rupees in Millions)

Years of Development	Economic Cost of Running Vehicles: Without Improvement	Economic Cost of Running Vehicles: With Improvement	Net Saving	Project* Benefits
0	9.942	9.942	0.000	0.000
1	10.375	7.469	2.906	0.000
2	10.827	7.797	3.030	0.454
3	11.301	8.141	3.159	1.106
4	11.796	8.501	3.295	1.977
5	12.315	8.879	3.436	2.921
6	12.858	9.274	3.585	3.585
7	13.427	9.687	3.740	3.740
8	14.023	10.120	3.902	3.902
9	14.647	10.574	4.073	4.073
10	15.301	11.050	4.251	4.251
11	15.986	11.548	4.437	4.437
12	16.703	12.071	4.633	4.633
13	17.456	12.618	4.837	4.837
14	18.244	13.192	5.052	5.052
15	19.070	13.794	5.277	5.277
16	19.937	14.425	5.512	5.512
17	20.845	15.086	5.759	5.759
18	21.798	15.780	6.018	6.018
19	22.797	16.508	6.290	6.290
20	23.846	17.271	6.575	6.575
21	23.846	17.271	6.575	6.575
22	23.846	17.271	6.575	6.575
23	23.846	17.271	6.575	6.575
24	23.846	17.271	6.575	6.575
25	23.846	17.271	6.575	6.575
26	23.846	17.271	6.575	6.575
27	23.846	17.271	6.575	6.575
28	23.846	17.271	6.575	6.575
29	23.846	17.271	6.575	6.575
30	23.846	17.271	6.575	6.575

* Project Benefits have been phased according to construction schedule of 15%, 20%, 25%, 25% and 15% commencing from the year following completion.

633

Table No. 9.23.13

BENEFITS FROM V.O.C. SAVING

UPPER SWAT IRRIGATION SYSTEM

(Rupees in Millions)

Years of Development	Economic Cost of Running Vehicles		Net Saving	Project* Benefits
	Without Improvement	With Improvement		
0	27.933	27.933	0.000	0.000
1	29.085	20.690	8.395	0.000
2	30.289	21.555	8.734	1.310
3	31.547	22.460	9.087	3.181
4	32.862	23.405	9.457	5.674
5	34.236	24.393	9.842	8.366
6	35.672	25.427	10.245	10.245
7	37.174	26.508	10.666	10.666
8	38.744	27.639	11.106	11.106
9	40.387	28.822	11.565	11.565
10	42.105	30.059	12.046	12.046
11	43.903	31.354	12.548	12.548
12	45.784	32.710	13.074	13.074
13	47.752	34.129	13.624	13.624
14	49.813	35.614	14.199	14.199
15	51.970	37.170	14.801	14.801
16	54.229	38.799	15.431	15.431
17	56.595	40.505	16.090	16.090
18	59.073	42.293	16.780	16.780
19	61.670	44.166	17.504	17.504
20	64.390	46.129	18.261	18.261
21	64.390	46.129	18.261	18.261
22	64.390	46.129	18.261	18.261
23	64.390	46.129	18.261	18.261
24	64.390	46.129	18.261	18.261
25	64.390	46.129	18.261	18.261
26	64.390	46.129	18.261	18.261
27	64.390	46.129	18.261	18.261
28	64.390	46.129	18.261	18.261
29	64.390	46.129	18.261	18.261
30	64.390	46.129	18.261	18.261

* Project Benefits have been phased according to construction schedule of 15%, 20%, 25%, 25% and 15% commencing from the year following completion.

134

Table 9.24

POTENTIAL TIME SAVINGS OF LOCAL TRAVELLERS *

SYSTEMS	POPULATION 000	MALES AGED 15-60 Yrs. Percent of Population	MALES AGED 15-60 Yrs. Numbers 000	TRAVELLERS Numbers 000	ECONOMIC Trips/Yr 000	REDUCTION of Distance per trip Km	TIME SAVED Per Round Trip hrs	Man days Saved Per Year 000	ECONOMIC Value of Time Saved Rs. 000
PUNJAB									
JHANG BRANCH	973	25.44	248	124	2970	1.68	0.22	83.15	1662.99
GOGERA BRANCH	1824	25.44	464	232	5568	1.32	0.18	122.47	2449.44
DEPALPUR CANAL	1344	25.44	342	171	4103	2.58	0.34	176.38	3527.67
MAILSI CANAL	1127	25.44	287	143	3441	1.33	0.18	76.25	1524.91
SIND									
NASIR BRANCH	182	24.48	45	22	535	1.82	0.24	16.21	324.27
JAMRAO & MITHRAO	249	25.44	63	32	760	16.31	2.17	206.58	4131.63
GOTKI FEEDER	596	24.00	143	72	1716	1.36	0.18	38.90	777.94
ROHRI CANAL	176	25.44	45	22	537	5.03	0.67	45.03	900.64
DADU CANAL	132	24.96	33	16	395	4.97	0.66	32.74	654.83
NWFP									
KABUL RIVER CANAL	417	25.44	106	53	1273	0.35	0.05	7.42	148.48
PHARPUR CANAL	87	25.44	22	11	266	3.03	0.40	13.41	268.18
MARWAT CANAL	751	24.96	187	94	2249	0.84	0.11	31.48	629.67
UPPER SWAT CANAL	2005	24.96	500	250	6005	0.64	0.09	64.04	1280.83

* Potential benefits increase with population, but are realized only after construction

SOURCE : Consultants Estimates.

635

Table 9.25.1

VALUE OF TIME SAVINGS , SYSTEMS IN PUNJAB

(Million Rupees)

YEARS	PHASE IN RATE	PUNJAB				
		JHANG	GOGERA	DEPALPUR	MAILSI	TOTAL
0	0.00	0.00	0.00	0.00	0.00	0.00
1	0.00	0.00	0.00	0.00	0.00	0.00
2	0.15	0.26	0.39	0.56	0.24	1.46
3	0.35	0.64	0.92	1.35	0.58	3.50
4	0.60	1.12	1.62	2.39	1.03	6.17
5	0.85	1.64	2.36	3.49	1.50	8.99
6	1.00	1.99	2.84	4.24	1.82	10.88
7	1.00	2.05	2.91	4.37	1.88	11.20
8	1.00	2.11	2.98	4.50	1.93	11.53
9	1.00	2.17	3.06	4.64	1.99	11.86
10	1.00	2.23	3.14	4.79	2.05	12.21
11	1.00	2.30	3.21	4.94	2.11	12.56
12	1.00	2.37	3.29	5.09	2.17	12.93
13	1.00	2.44	3.38	5.25	2.24	13.30
14	1.00	2.52	3.46	5.41	2.31	13.69
15	1.00	2.59	3.55	5.58	2.38	14.09
16	1.00	2.67	3.64	5.75	2.45	14.50
17	1.00	2.75	3.73	5.93	2.52	14.92
18	1.00	2.83	3.82	6.11	2.60	15.36
19	1.00	2.92	3.92	6.30	2.67	15.81
20	1.00	3.00	4.01	6.50	2.75	16.27
21	1.00	3.09	4.11	6.70	2.84	16.74
22	1.00	3.19	4.22	6.91	2.92	17.23
23	1.00	3.28	4.32	7.12	3.01	17.73
24	1.00	3.38	4.43	7.34	3.10	18.25
25	1.00	3.48	4.54	7.57	3.19	18.78
26	1.00	3.59	4.65	7.80	3.29	19.33
27	1.00	3.69	4.77	8.04	3.39	19.90
28	1.00	3.80	4.89	8.29	3.49	20.48
29	1.00	3.92	5.01	8.55	3.59	21.08
30	1.00	4.04	5.14	8.82	3.70	21.69

636

Table 9.25.2

VALUE OF TIME SAVINGS , SYSTEMS IN SIND

(Million Rupees)

YEARS	PHASE IN RATE	SIND					
		NASIR	JAMRAO & MITHRAO	GOTKI	ROHRI	DADU	TOTAL
0	0.00	0.00	0.00	0.00	0.00	0.00	0.00
1	0.00	0.00	0.00	0.00	0.00	0.00	0.00
2	0.15	0.05	0.66	0.12	0.14	0.10	1.09
3	0.35	0.13	1.60	0.30	0.34	0.25	2.62
4	0.60	0.22	2.84	0.53	0.60	0.45	4.64
5	0.85	0.33	4.17	0.77	0.87	0.65	6.79
6	1.00	0.40	5.08	0.93	1.06	0.79	8.25
7	1.00	0.41	5.26	0.96	1.09	0.82	8.52
8	1.00	0.42	5.44	0.99	1.11	0.84	8.81
9	1.00	0.44	5.63	1.02	1.14	0.87	9.10
10	1.00	0.45	5.83	1.05	1.18	0.90	9.40
11	1.00	0.47	6.03	1.08	1.21	0.93	9.71
12	1.00	0.48	6.24	1.11	1.24	0.96	10.03
13	1.00	0.50	6.46	1.14	1.27	0.99	10.36
14	1.00	0.52	6.69	1.18	1.31	1.02	10.71
15	1.00	0.54	6.92	1.21	1.34	1.05	11.06
16	1.00	0.55	7.16	1.25	1.38	1.08	11.43
17	1.00	0.57	7.41	1.29	1.42	1.12	11.81
18	1.00	0.59	7.67	1.32	1.45	1.15	12.20
19	1.00	0.61	7.94	1.36	1.49	1.19	12.60
20	1.00	0.63	8.22	1.41	1.53	1.23	13.02
21	1.00	0.65	8.51	1.45	1.58	1.27	13.46
22	1.00	0.68	8.81	1.49	1.62	1.31	13.90
23	1.00	0.70	9.11	1.54	1.66	1.35	14.36
24	1.00	0.72	9.43	1.58	1.71	1.39	14.84
25	1.00	0.75	9.76	1.63	1.75	1.44	15.33
26	1.00	0.77	10.11	1.68	1.80	1.49	15.84
27	1.00	0.80	10.46	1.73	1.85	1.53	16.37
28	1.00	0.83	10.83	1.78	1.90	1.58	16.91
29	1.00	0.86	11.20	1.83	1.95	1.63	17.48
30	1.00	0.88	11.60	1.89	2.00	1.68	18.06

Table 9.25.3

VALUE OF TIME SAVINGS, SYSTEMS IN NWFP

(Thousand of Rupees)

YEARS	PHASE IN RATE	NWFP					PROJECT TOTAL
		KABUL	PAHARPUR	MARWAT	UPPER SWAT	TOTAL	
0	0.00	0.00	0.00	0.00	0.00	0.00	0.00
1	0.00	0.00	0.00	0.00	0.00	0.00	0.00
2	0.15	0.02	0.04	0.10	0.20	0.37	2.91
3	0.35	0.06	0.10	0.24	0.49	0.89	7.00
4	0.60	0.10	0.18	0.42	0.86	1.56	12.37
5	0.85	0.14	0.27	0.61	1.25	2.27	18.05
6	1.00	0.17	0.33	0.74	1.51	2.75	21.89
7	1.00	0.17	0.34	0.76	1.55	2.83	22.55
8	1.00	0.18	0.35	0.79	1.60	2.91	23.24
9	1.00	0.18	0.36	0.81	1.64	2.99	23.95
10	1.00	0.18	0.37	0.83	1.69	3.07	24.68
11	1.00	0.19	0.38	0.85	1.74	3.16	25.43
12	1.00	0.19	0.40	0.88	1.78	3.25	26.21
13	1.00	0.20	0.41	0.90	1.83	3.34	27.01
14	1.00	0.20	0.42	0.93	1.89	3.44	27.84
15	1.00	0.21	0.44	0.95	1.94	3.53	28.69
16	1.00	0.21	0.45	0.98	1.99	3.63	29.56
17	1.00	0.21	0.47	1.01	2.05	3.74	30.47
18	1.00	0.22	0.48	1.04	2.11	3.84	31.40
19	1.00	0.22	0.50	1.06	2.16	3.95	32.36
20	1.00	0.23	0.51	1.09	2.23	4.06	33.35
21	1.00	0.23	0.53	1.12	2.29	4.18	34.37
22	1.00	0.24	0.55	1.16	2.35	4.29	35.43
23	1.00	0.24	0.57	1.19	2.42	4.42	36.51
24	1.00	0.25	0.58	1.22	2.48	4.54	37.63
25	1.00	0.26	0.60	1.26	2.55	4.67	38.79
26	1.00	0.26	0.62	1.29	2.63	4.80	39.98
27	1.00	0.27	0.64	1.33	2.70	4.94	41.20
28	1.00	0.27	0.67	1.36	2.78	5.08	42.47
29	1.00	0.28	0.69	1.40	2.85	5.22	43.77
30	1.00	0.29	0.71	1.44	2.93	5.37	45.12

638

TABLE 9.26

INVESTMENT COSTS AT MARKET PRICES, CRP
(Financial Prices)

(Rs Million)

CATEGORY	TOTAL COSTS	Y E A R S 1	2	3	4	5
Equipment (FX)	353.185	211.911	141.274	--	--	--
Fuel, Oil, Grease	339.541	50.675	76.030	73.719	70.705	68.412
Parts, Imported (FX)	74.385	49.340	8.372	8.372	8.389	--
Parts, Local	45.506	22.085	6.470	7.259	7.259	2.345
Labour	254.059	38.108	50.812	63.515	63.515	38.109
Civil Works + Other Costs	770.997	115.650	154.199	192.749	192.749	115.650
Consulting Engineers	106.000	21.200	21.200	21.200	21.200	21.200
Technical Assistance (FX)	15.000	3.000	3.000	3.000	3.000	3.000
Total	1958.673	511.969	461.357	369.814	366.817	248.716
Foreign Exchange Component	442.570					
Local Currency Component	1516.103	of which labour 40 % = 606.441				
		shadow wages @ 80 % x 606.441 = 485.153				
Econ Price of Local Comp.	1394.815	Difference = 121.288				
Economic Total Cost	1837.385					

FX = Foreign Exchange

639

TABLE 9.27

ECONOMIC INVESTMENT COSTS OF CRP BY SYSTEMS AND BY YEARS

(Rs Millions)

SYSTEMS	TOTAL COSTS				YEARS				
	FINANCIAL COSTS			ECONOMIC COSTS	1	2	3	4	5
	LOCAL	FOREIGN EXCHANGE	TOTAL						
JHANG	147.99	43.250	191.240	179.398	48.052	42.634	33.308	33.039	22.365
GOGERA	106.48	31.118	137.598	129.077	34.574	30.676	23.965	23.772	16.091
DEPALPUR	285.37	83.398	368.768	345.933	92.660	82.212	64.228	63.709	43.126
MAILSI	225.70	65.960	291.660	273.599	73.285	65.022	50.798	50.388	34.108
PUNJAB	765.54	223.726	989.266	928.007	248.570	220.544	172.298	170.907	115.690
NASIR	44.887	13.118	58.005	54.413	14.575	12.931	10.103	10.021	6.783
JAMRAO & MITHRAO	238.839	69.800	308.639	289.527	77.551	68.807	53.755	53.321	36.094
GOTKI	168.448	49.228	217.676	204.197	54.695	48.528	37.912	37.606	25.456
ROHRI	76.866	22.464	99.330	93.179	24.958	22.144	17.300	17.160	11.616
DADU	79.073	23.109	102.182	95.855	25.675	22.780	17.797	17.653	11.950
SIND	608.11	177.72	785.83	737.17	197.454	175.191	136.867	135.762	91.899
KABUL	19.068	5.573	24.641	23.115	6.191	5.493	4.292	4.257	2.882
PHARPUR	21.432	6.263	27.695	25.980	6.959	6.174	4.824	4.785	3.239
MARWAT	21.826	6.378	28.204	26.457	7.087	6.288	4.912	4.872	3.298
UPPER SWAT	79.733	23.302	103.035	96.655	25.889	22.970	17.945	17.801	12.049
NWFP	142.06	41.52	183.58	172.21	46.126	40.926	31.973	31.715	21.468
PROJECT	1515.712	442.961	1958.673	1837.385	492.151	436.660	341.138	338.384	229.058

640

TABLE 9.28

OPERATION AND MAINTENANCE COSTS FOR CRP

(Rs Million)

SYSTEMS	NEW ROADS	ECONOMIC O & M COST	TOTAL O & M	O & M COSTS BY YEARS					
	Km	Rs PER Km	Rs Million	1	2	3	4	5	6-30
JHANG	213	11.966	2.556	--	0.383	0.895	1.534	2.173	2.556
GOGERA	140	11.966	1.680	--	0.252	0.588	1.008	1.428	1.680
DEPALPUR	363	11.966	4.356	--	0.653	1.525	2.614	3.703	4.356
MAILSI	243	11.966	2.916	--	0.437	1.021	1.750	2.479	2.916
NASIR	57	11.459	0.656	--	0.098	0.230	0.394	0.558	0.656
JAMRAO & MITHRAO	296	11.459	3.404	--	0.511	1.191	2.042	2.893	3.404
GOTKI	219	11.459	2.518	--	0.378	0.881	1.511	2.140	2.518
ROHRI	100	11.459	1.150	--	0.173	0.403	0.690	0.978	1.150
DADU	104	11.459	1.196	--	0.179	0.419	0.718	1.017	1.196
KABUL	31	5.150	0.192	--	0.029	0.067	0.115	0.163	0.192
PAHARPUR	51	5.150	0.316	--	0.047	0.111	0.190	0.269	0.316
MARWAT	45	5.150	0.279	--	0.042	0.098	0.167	0.237	0.279
UPPER SWAT	133	5.150	0.825	--	0.124	0.289	0.495	0.701	0.825
TOTAL	1995	125.759	22.044		3.307	7.715	13.226	18.737	22.044

641

TABLE 9.29.1

ECONOMIC ANALYSIS OF CANAL ROADS IN JHANG SYSTEM:
BENEFITS, COSTS AND MEASURES OF PROJECT DESIRABILITY
(Rs.Million)

YEARS	BENEFITS: Increase in Agri. Prod.	Savings in off-Road Hauling Exp.	Canal O&M Savings	Vehicle Operating Cost (VOC) Savings	Time Savings	Total Benefits	COSTS: Capital Cost	O & M Cost	Total Cost	CASH FLOW	PRESENT WORTH: Benefits @ 12%	Costs @ 12%	CASH FLOW 26%	CASH FLOW 28%
0	0.00	0.00	0.00	0.00	0.00	0.00	0.00	0.00	0.00	0.00	0.00	0.00	0.00	0.00
1	0.00	0.00	0.00	0.00	0.00	0.00	48.05	0.00	48.05	-48.05	0.00	42.90	-38.14	-37.54
2	0.71	0.50	0.03	2.13	0.26	3.62	42.63	0.38	43.02	-39.39	2.89	34.29	-24.81	-24.04
3	3.29	1.18	0.07	5.20	0.64	10.37	33.31	0.90	34.20	-23.83	7.38	24.35	-11.91	-11.36
4	8.45	2.09	0.12	9.33	1.12	21.11	33.04	1.53	34.57	-13.47	13.41	21.97	-5.34	-5.02
5	15.95	3.10	0.17	13.85	1.64	34.70	22.37	2.17	24.54	10.16	19.69	13.92	3.20	2.96
6	23.45	3.81	0.20	17.06	1.99	46.51	0.00	2.56	2.56	43.96	23.56	1.29	10.98	9.99
7	28.12	3.91	0.20	17.88	2.05	52.16	0.00	2.56	2.56	49.60	23.59	1.16	9.84	8.81
8	32.79	4.02	0.20	18.73	2.11	57.84	0.00	2.56	2.56	55.29	23.36	1.03	8.70	7.67
9	37.45	4.12	0.20	19.63	2.17	63.56	0.00	2.56	2.56	61.00	22.92	0.92	7.62	6.61
10	42.11	4.22	0.20	20.57	2.23	69.32	0.00	2.56	2.56	66.77	22.32	0.82	6.62	5.66
11	46.06	4.29	0.20	21.56	2.30	74.41	0.00	2.56	2.56	71.85	21.39	0.73	5.65	4.75
12	50.01	4.37	0.20	22.60	2.37	79.55	0.00	2.56	2.56	76.99	20.42	0.66	4.81	3.98
13	53.95	4.44	0.20	23.69	2.44	84.72	0.00	2.56	2.56	82.17	19.42	0.59	4.07	3.32
14	57.88	4.52	0.20	24.84	2.52	89.96	0.00	2.56	2.56	87.40	18.41	0.52	3.44	2.76
15	61.80	4.59	0.20	26.05	2.59	95.23	0.00	2.56	2.56	92.67	17.40	0.47	2.89	2.28
16	65.72	4.66	0.20	27.32	2.67	100.57	0.00	2.56	2.56	98.01	16.40	0.42	2.43	1.89
17	69.64	4.73	0.20	28.66	2.75	105.97	0.00	2.56	2.56	103.42	15.43	0.37	2.03	1.56
18	73.54	4.80	0.20	30.06	2.83	111.43	0.00	2.56	2.56	108.87	14.49	0.33	1.70	1.28
19	77.44	4.86	0.20	31.54	2.92	116.96	0.00	2.56	2.56	114.40	13.58	0.30	1.42	1.05
20	81.33	4.93	0.20	33.10	3.00	122.55	0.00	2.56	2.56	119.99	12.70	0.26	1.18	0.86
21	81.33	4.87	0.20	33.10	3.09	122.59	0.00	2.56	2.56	120.03	11.35	0.24	0.94	0.67
22	81.33	4.82	0.20	33.10	3.19	122.63	0.00	2.56	2.56	120.08	10.13	0.21	0.74	0.53
23	81.33	4.77	0.20	33.10	3.28	122.67	0.00	2.56	2.56	120.11	9.05	0.19	0.59	0.41
24	81.33	4.71	0.20	33.10	3.38	122.71	0.00	2.56	2.56	120.15	8.08	0.17	0.47	0.32
25	81.33	4.65	0.20	33.10	3.48	122.75	0.00	2.56	2.56	120.20	7.22	0.15	0.37	0.25
26	81.33	4.59	0.20	33.10	3.59	122.80	0.00	2.56	2.56	120.24	6.45	0.13	0.30	0.20
27	81.33	4.53	0.20	33.10	3.69	122.84	0.00	2.56	2.56	120.28	5.76	0.12	0.23	0.15
28	81.33	4.46	0.20	33.10	3.80	122.88	0.00	2.56	2.56	120.33	5.15	0.11	0.19	0.12
29	81.33	4.40	0.20	33.10	3.92	122.94	0.00	2.56	2.56	120.38	4.60	0.10	0.15	0.09
30	81.33	4.33	0.20	33.10	4.04	122.99	0.00	2.56	2.56	120.43	4.11	0.09	0.12	0.07
TOTAL	1642.99	119.23	5.31	724.74	76.06	2568.33	179.40	68.89	248.28	2320.05	400.67	148.81	0.48	-9.71

NET PRESENT WORTH = Rs. 251.859 million

B/C RATIO = 2.69 : 1

IRR = 26.09 %

642

TABLE 9.29.2

ECONOMIC ANALYSIS OF CANAL ROADS IN GOGERA SYSTEM:
BENEFITS, COSTS AND MEASURES OF PROJECT DESIRABILITY
(Rs.Million)

YEARS	BENEFITS: Increase in Agri. Prod.	BENEFITS: Savings in off-Road Hauling Exp.	BENEFITS: Canal O&M Savings	BENEFITS: Vehicle Operating Cost(VOC) Savings	BENEFITS: Time Savings	BENEFITS: Total Benefits	COSTS: Capital Cost	COSTS: O & M Cost	COSTS: Total Cost	CASH FLOW	PRESENT WORTH: Benefits @ 12%	PRESENT WORTH: Costs @ 12%	PRESENT WORTH: CASH FLOW 32%	PRESENT WORTH: CASH FLOW 34%
0	0.00	0.00	0.00	0.00	0.00	0.00	0.00	0.00	0.00	0.00	0.00	0.00	0.00	0.00
1	0.00	0.00	0.00	0.00	0.00	0.00	34.57	0.00	34.57	-34.57	0.00	30.87	-26.19	-25.80
2	0.90	0.78	0.02	0.99	0.39	3.08	30.68	0.25	30.93	-27.85	2.46	24.65	-15.98	-15.51
3	4.17	1.83	0.05	2.43	0.92	9.40	23.97	0.59	24.55	-15.15	6.69	17.48	-6.59	-6.30
4	10.71	3.23	0.08	4.37	1.62	20.01	23.77	1.09	24.86	-4.85	12.71	15.80	-1.60	-1.51
5	20.19	4.75	0.11	6.51	2.36	33.92	16.09	1.43	17.52	16.40	19.24	9.94	4.09	3.80
6	29.63	5.80	0.13	8.04	2.84	46.44	0.00	1.68	1.68	44.76	23.53	0.85	8.46	7.73
7	35.48	5.91	0.13	8.45	2.91	52.88	0.00	1.68	1.68	51.20	23.92	0.76	7.33	6.60
8	41.32	6.02	0.13	8.88	2.98	59.34	0.00	1.68	1.68	57.66	23.96	0.68	6.26	5.55
9	47.12	6.13	0.13	9.34	3.06	65.78	0.00	1.68	1.68	64.10	23.72	0.61	5.27	4.60
10	52.91	6.24	0.13	9.82	3.14	72.24	0.00	1.68	1.68	70.56	23.26	0.54	4.39	3.78
11	57.59	6.31	0.13	10.33	3.21	77.57	0.00	1.68	1.68	75.89	22.30	0.48	3.58	3.03
12	62.26	6.37	0.13	10.87	3.29	82.93	0.00	1.68	1.68	81.25	21.29	0.43	2.90	2.42
13	66.91	6.44	0.13	11.44	3.38	88.30	0.00	1.68	1.68	86.62	20.24	0.39	2.35	1.93
14	71.55	6.50	0.13	12.05	3.46	93.69	0.00	1.68	1.68	92.01	19.17	0.34	1.89	1.53
15	76.16	6.56	0.13	12.69	3.55	99.09	0.00	1.68	1.68	97.41	18.10	0.31	1.51	1.21
16	80.75	6.62	0.13	13.37	3.64	104.51	0.00	1.68	1.68	102.83	17.05	0.27	1.21	0.95
17	85.33	6.67	0.13	14.09	3.73	109.95	0.00	1.68	1.68	108.27	16.01	0.24	0.97	0.75
18	89.88	6.73	0.13	14.85	3.82	115.40	0.00	1.68	1.68	113.72	15.01	0.22	0.77	0.59
19	94.42	6.78	0.13	15.65	3.92	120.90	0.00	1.68	1.68	119.22	14.04	0.20	0.61	0.46
20	98.94	6.83	0.13	16.51	4.01	126.42	0.00	1.68	1.68	124.74	13.11	0.17	0.48	0.36
21	98.94	6.77	0.13	16.51	4.11	126.46	0.00	1.68	1.68	124.78	11.70	0.16	0.37	0.27
22	98.94	6.71	0.13	16.51	4.22	126.51	0.00	1.68	1.68	124.83	10.46	0.14	0.28	0.20
23	98.94	6.65	0.13	16.51	4.32	126.55	0.00	1.68	1.68	124.87	9.34	0.12	0.21	0.15
24	98.94	6.59	0.13	16.51	4.43	126.60	0.00	1.68	1.68	124.92	8.34	0.11	0.16	0.11
25	98.94	6.56	0.13	16.51	4.54	126.68	0.00	1.68	1.68	125.00	7,45	0.10	0.12	0.08
26	98.94	6.62	0.13	16.51	4.65	126.85	0.00	1.68	1.68	125.17	6.66	0.09	0.09	0.06
27	98.94	6.69	0.13	16.51	4.77	127.04	0.00	1.68	1.68	125.36	5.96	0.08	0.07	0.05
28	98.94	6.76	0.13	16.51	4.89	127.23	0.00	1.68	1.68	125.55	5.33	0.07	0.05	0.03
29	98.94	6.83	0.13	16.51	5.01	127.42	0.00	1.68	1.68	125.74	4.76	0.06	0.04	0.03
30	98.94	6.91	0.13	16.51	5.14	127.63	0.00	1.68	1.68	125.95	4.26	0.06	0.03	0.02
TOTAL	2015.62	173.58	3.51	355.78	102.31	2650.79	129.08	45.36	174.43	2476.36	410.06	106.22	3.13	-2.83

NET PRESENT WORTH = Rs. 303.845 million

B/C RATIO = 3.86 : 1

IRR = 33.05 %

TABLE 9.29.3

ECONOMIC ANALYSIS OF CANAL ROADS IN DEPALPUR SYSTEM:
BENEFITS, COSTS AND MEASURES OF PROJECT DESIRABILITY
(Rs.Million)

YEARS	BENEFITS: Increase in Agri. Prod.	Savings in off-Road Hauling Exp.	Canal O&M Savings	Vehicle Operating Cost(VOC) Savings	Time Savings	Total Benefits	COSTS: Capital Cost	O & M Cost	Total Cost	CASH FLOW	PRESENT WORTH: Benefits @ 12%	Costs @ 12%	CASH FLOW 16%	CASH FLOW 18%
0	0.00	0.00	0.00	0.00	0.00	0.00	0.00	0.00	0.00	0.00	0.00	0.00	0.00	0.00
1	0.00	0.00	0.00	0.00	0.00	0.00	92.66	0.00	92.66	-92.66	0.00	82.73	-79.88	-78.52
2	0.53	1.09	0.06	2.93	0.56	5.16	82.21	0.65	82.87	-77.70	4.12	66.06	-57.75	-55.80
3	2.46	2.55	0.13	7.16	1.35	13.66	64.23	1.53	65.75	-52.10	9.72	46.80	-33.38	-31.71
4	6.32	4.43	0.23	12.88	2.39	26.25	63.71	2.61	66.32	-40.07	16.68	42.15	-22.13	-20.67
5	11.94	6.40	0.32	19.15	3.49	41.30	43.13	3.70	46.83	-5.53	23.43	26.57	-2.63	-2.42
6	17.55	7.67	0.38	23.64	4.24	53.48	0.00	4.36	4.36	49.12	27.09	2.21	20.16	18.20
7	21.05	7.75	0.38	24.81	4.37	58.36	0.00	4.36	4.36	54.00	26.40	1.97	19.11	16.95
8	24.55	7.82	0.38	26.05	4.50	63.30	0.00	4.36	4.36	58.94	25.56	1.76	17.98	15.68
9	28.05	7.89	0.38	27.35	4.64	68.31	0.00	4.36	4.36	63.95	24.63	1.57	16.82	14.42
10	31.55	7.96	0.38	28.73	4.79	73.40	0.00	4.36	4.36	69.05	23.63	1.40	15.65	13.19
11	35.08	8.02	0.38	30.18	4.94	78.60	0.00	4.36	4.36	74.24	22.59	1.25	14.51	12.02
12	38.62	8.08	0.38	31.71	5.09	83.88	0.00	4.36	4.36	79.52	21.53	1.12	13.40	10.91
13	42.15	8.14	0.38	33.33	5.25	89.24	0.00	4.36	4.36	84.88	20.45	1.00	12.33	9.87
14	45.68	8.19	0.38	35.03	5.41	94.69	0.00	4.36	4.36	90.34	19.38	0.89	11.31	8.90
15	49.21	8.24	0.38	36.84	5.58	100.24	0.00	4.36	4.36	95.89	18.31	0.80	10.35	8.01
16	52.74	8.29	0.38	38.74	5.75	105.90	0.00	4.36	4.36	101.54	17.27	0.71	9.45	7.19
17	56.27	8.34	0.38	40.75	5.93	111.66	0.00	4.36	4.36	107.31	16.26	0.63	8.61	6.44
18	59.79	8.38	0.38	42.87	6.11	117.53	0.00	4.36	4.36	113.17	15.28	0.57	7.83	5.75
19	63.31	8.42	0.38	45.12	6.30	123.52	0.00	4.36	4.36	119.17	14.34	0.51	7.10	5.13
20	66.83	8.45	0.38	47.49	6.50	129.65	0.00	4.36	4.36	125.29	13.44	0.45	6.44	4.57
21	66.83	8.34	0.38	47.49	6.70	129.73	0.00	4.36	4.36	125.38	12.01	0.40	5.55	3.88
22	66.83	8.22	0.38	47.49	6.91	129.82	0.00	4.36	4.36	125.47	10.73	0.36	4.79	3.29
23	66.83	8.09	0.38	47.49	7.12	129.91	0.00	4.36	4.36	125.55	9.59	0.32	4.13	2.79
24	66.83	7.96	0.38	47.49	7.34	130.00	0.00	4.36	4.36	125.64	8.56	0.29	3.57	2.37
25	66.83	7.83	0.38	47.49	7.57	130.10	0.00	4.36	4.36	125.74	7.65	0.26	3.08	2.01
26	66.83	7.70	0.38	47.49	7.80	130.19	0.00	4.36	4.36	125.84	6.84	0.23	2.65	1.70
27	66.83	7.56	0.38	47.49	8.04	130.29	0.00	4.36	4.36	125.94	6.11	0.20	2.29	1.44
28	66.83	7.41	0.38	47.49	8.29	130.40	0.00	4.36	4.36	126.04	5.46	0.18	1.98	1.22
29	66.83	7.26	0.38	47.49	8.55	130.51	0.00	4.36	4.36	126.15	4.88	0.16	1.70	1.04
30	66.83	7.11	0.38	47.49	8.82	130.63	0.00	4.36	4.36	126.27	4.36	0.15	1.47	0.88
TOTAL	1321.98	213.56	10.19	1029.63	164.33	2739.69	345.93	117.4	463.33	2276.36	436.33	283.70	26.48	-11.27

NET PRESENT WORTH = Rs. 152.626 million

B/C RATIO = 1.54 : 1

IRR = 17.40 %

TABLE 9.29.4

ECONOMIC ANALYSIS OF CANAL ROADS IN MAILSI SYSTEM:
BENEFITS, COSTS AND MEASURES OF PROJECT DESIRABILITY
(Rs.Million)

YEARS	BENEFITS: Increase in Agri. Prod.	Savings in off-Road Hauling Exp.	Canal O&M Savings	Vehicle Operating Cost(VOC) Savings	Time Savings	Total Benefits	COSTS: Capital Cost	O & M Cost	Total Cost	CASH FLOW	PRESENT WORTH: Benefits @ 12%	Costs @ 12%	CASH FLOW 16%	CASH FLOW 18%
0	0.00	0.00	0.00	0.00	0.00	0.00	0.00	0.00	0.00	0.00	0.00	0.00	0.00	0.00
1	0.00	0.00	0.00	0.00	0.00	0.00	73.28	0.00	73.28	-73.28	0.00	65.43	-63.18	-62.11
2	0.70	0.35	0.02	1.89	0.24	3.19	65.02	0.44	65.46	-62.27	2.54	52.16	-46.27	-44.72
3	3.27	0.81	0.05	4.62	0.58	9.33	50.80	1.02	51.82	-42.49	6.64	36.88	-27.22	-25.86
4	8.41	1.41	0.08	8.31	1.03	19.23	50.39	1.75	52.14	-32.91	12.22	33.13	-18.17	-16.97
5	15.90	2.03	0.11	12.35	1.50	31.89	34.11	2.48	36.59	-4.70	18.09	20.76	-2.24	-2.05
6	23.41	2.43	0.13	15.24	1.82	43.03	0.00	2.92	2.92	40.12	21.80	1.48	16.46	14.86
7	28.13	2.45	0.13	16.00	1.88	48.59	0.00	2.92	2.92	45.68	21.98	1.32	16.16	14.34
8	32.86	2.48	0.13	16.80	1.93	54.19	0.00	2.92	2.92	51.27	21.89	1.18	15.64	13.64
9	37.60	2.50	0.13	17.64	1.99	59.85	0.00	2.92	2.92	56.94	21.58	1.05	14.97	12.84
10	42.35	2.52	0.13	18.52	2.05	65.57	0.00	2.92	2.92	62.65	21.11	0.94	14.20	11.97
11	44.23	2.52	0.13	19.46	2.11	68.45	0.00	2.92	2.92	65.53	19.68	0.84	12.81	10.61
12	46.12	2.52	0.13	20.45	2.17	71.39	0.00	2.92	2.92	68.47	18.32	0.75	11.54	9.40
13	48.01	2.52	0.13	21.50	2.24	74.39	0.00	2.92	2.92	71.48	17.05	0.67	10.38	8.31
14	49.91	2.52	0.13	22.60	2.31	77.47	0.00	2.92	2.92	74.55	15.85	0.60	9.33	7.35
15	51.81	2.52	0.13	23.77	2.38	80.60	0.00	2.92	2.92	77.69	14.73	0.53	8.38	6.49
16	53.71	2.51	0.13	25.00	2.45	83.80	0.00	2.92	2.92	80.88	13.67	0.48	7.53	5.72
17	55.62	2.51	0.13	26.30	2.52	87.08	0.00	2.92	2.92	84.16	12.68	0.42	6.75	5.05
18	57.53	2.50	0.13	27.68	2.60	90.44	0.00	2.92	2.92	87.53	11.76	0.38	6.05	4.45
19	59.45	2.49	0.13	29.14	2.67	93.88	0.00	2.92	2.92	90.97	10.90	0.34	5.42	3.92
20	61.37	2.48	0.13	30.69	2.75	97.42	0.00	2.92	2.92	94.50	10.10	0.30	4.86	3.45
21	61.37	2.44	0.13	30.69	2.84	97.46	0.00	2.92	2.92	94.54	9.02	0.27	4.19	2.92
22	61.37	2.39	0.13	30.69	2.92	97.49	0.00	2.92	2.92	94.58	8.06	0.24	3.61	2.48
23	61.37	2.34	0.13	30.69	3.01	97.53	0.00	2.92	2.92	94.62	7.20	0.22	3.11	2.10
24	61.37	2.29	0.13	30.69	3.10	97.57	0.00	2.92	2.92	94.65	6.43	0.19	2.69	1.78
25	61.37	2.23	0.13	30.69	3.19	97.61	0.00	2.92	2.92	94.69	5.74	0.17	2.32	1.51
26	61.37	2.18	0.13	30.69	3.29	97.65	0.00	2.92	2.92	94.73	5.13	0.15	2.00	1.28
27	61.37	2.12	0.13	30.69	3.39	97.69	0.00	2.92	2.92	94.78	4.58	0.14	1.72	1.09
28	61.37	2.06	0.13	30.69	3.49	97.74	0.00	2.92	2.92	94.82	4.09	0.12	1.49	0.92
29	61.37	2.00	0.13	30.69	3.59	97.78	0.00	2.92	2.92	94.86	3.66	0.11	1.28	0.78
30	61.37	2.01	0.13	30.69	3.70	97.89	0.00	2.92	2.92	94.98	3.27	0.10	1.11	0.66
TOTAL	1334.09	64.10	3.48	664.79	69.74	2136.20	273.60	78.6	352.19	1784.01	349.77	221.37	26.92	-3.79

NET PRESENT WORTH = Rs. 128.399 million

B/C RATIO = 1.58 : 1

IRR = 17.75 %

645

TABLE 9.29.5

ECONOMIC ANALYSIS OF CANAL ROADS IN NASIR SYSTEM:
BENEFITS, COSTS AND MEASURES OF PROJECT DESIRABILITY
(Rs.Million)

YEARS	BENEFITS: Increase in Agri. Prod.	Savings in off-Road Hauling Exp.	Canal O&M Savings	Vehicle Operating Cost(VOC) Savings	Time Savings	Total Benefits	COSTS: Capital Cost	O & M Cost	Total Cost	CASH FLOW	PRESENT WORTH: Benefits @ 12%	Costs @ 12%	CASH FLOW 20%	CASH FLOW 22%
0	0.00	0.00	0.00	0.00	0.00	0.00	0.00	0.00	0.00	0.00	0.00	0.00	0.00	0.00
1	0.00	0.00	0.00	0.00	0.00	0.00	14.58	0.00	14.58	-14.58	0.00	13.01	-12.15	-11.95
2	0.11	0.27	0.02	0.45	0.05	0.90	12.93	0.10	13.03	-12.13	0.72	10.39	-8.42	-8.15
3	0.54	0.66	0.04	1.10	0.13	2.46	10.10	0.23	10.33	-7.87	1.75	7.35	-4.56	-4.34
4	1.38	1.17	0.06	1.97	0.22	4.80	10.02	0.39	10.42	-5.61	3.05	6.62	-2.71	-2.53
5	2.61	1.74	0.09	2.93	0.33	7.69	6.78	0.56	7.34	0.35	4.36	4.17	0.14	0.13
6	3.85	2.14	0.10	3.61	0.40	10.10	0.00	0.66	0.66	9.45	5.12	0.33	3.16	2.86
7	4.63	2.21	0.10	3.79	0.41	11.14	0.00	0.66	0.66	10.49	5.04	0.30	2.93	2.61
8	5.42	2.29	0.10	3.98	0.42	12.21	0.00	0.66	0.66	11.55	4.93	0.26	2.69	2.35
9	6.21	2.37	0.10	4.18	0.44	13.30	0.00	0.66	0.66	12.64	4.79	0.24	2.45	2.11
10	7.00	2.45	0.10	4.38	0.45	14.39	0.00	0.66	0.66	13.73	4.63	0.21	2.22	1.88
11	7.56	2.52	0.10	4.60	0.47	15.26	0.00	0.66	0.66	14.60	4.39	0.19	1.97	1.64
12	8.13	2.60	0.10	4.83	0.48	16.14	0.00	0.66	0.66	15.48	4.14	0.17	1.74	1.42
13	8.70	2.67	0.10	5.08	0.50	17.05	0.00	0.66	0.66	16.39	3.91	0.15	1.53	1.24
14	9.27	2.75	0.10	5.33	0.52	17.97	0.00	0.66	0.66	17.31	3.68	0.13	1.35	1.07
15	9.83	2.82	0.10	5.60	0.54	18.90	0.00	0.66	0.66	18.24	3.45	0.12	1.18	0.92
16	10.40	2.90	0.10	5.89	0.55	19.84	0.00	0.66	0.66	19.19	3.24	0.11	1.04	0.80
17	10.97	2.98	0.10	6.19	0.57	20.81	0.00	0.66	0.66	20.16	3.03	0.10	0.91	0.69
18	11.53	3.06	0.10	6.51	0.59	21.79	0.00	0.66	0.66	21.14	2.83	0.09	0.79	0.59
19	12.10	3.14	0.10	6.85	0.61	22.80	0.00	0.66	0.66	22.14	2.65	0.08	0.69	0.51
20	12.67	3.22	0.10	7.21	0.63	23.83	0.00	0.66	0.66	23.17	2.47	0.07	0.60	0.43
21	12.67	3.23	0.10	7.21	0.65	23.86	0.00	0.66	0.66	23.20	2.21	0.06	0.50	0.36
22	12.67	3.24	0.10	7.21	0.68	23.90	0.00	0.66	0.66	23.24	1.97	0.05	0.42	0.29
23	12.67	3.24	0.10	7.21	0.70	23.92	0.00	0.66	0.66	23.27	1.77	0.05	0.35	0.24
24	12.67	3.25	0.10	7.21	0.72	23.95	0.00	0.66	0.66	23.30	1.58	0.04	0.29	0.20
25	12.67	3.26	0.10	7.21	0.75	23.99	0.00	0.66	0.66	23.34	1.41	0.04	0.24	0.18
26	12.67	3.27	0.10	7.21	0.77	24.02	0.00	0.66	0.66	23.37	1.26	0.03	0.20	0.13
27	12.67	3.28	0.10	7.21	0.80	24.06	0.00	0.66	0.66	23.41	1.13	0.03	0.17	0.11
28	12.67	3.29	0.10	7.21	0.83	24.10	0.00	0.66	0.66	23.45	1.01	0.03	0.14	0.09
29	12.67	3.30	0.10	7.21	0.86	24.14	0.00	0.66	0.66	23.49	0.90	0.02	0.12	0.07
30	12.67	3.32	0.10	7.21	0.88	24.18	0.00	0.66	0.66	23.52	0.81	0.02	0.10	0.06
TOTAL	259.61	76.62	2.75	156.57	15.95	511.50	54.41	17.68	72.09	439.41	82.23	44.46	0.10	-4.00

NET PRESENT WORTH = Rs. 37.7692 million

B/C RATIO = 1.85 : 1

IRR = 20.05 %

646

TABLE 9.29.6

ECONOMIC ANALYSIS OF CANAL ROADS IN JAMRAO & MITHRAO SYSTEM:
BENEFITS, COSTS AND MEASURES OF PROJECT DESIRABILITY
(Rs.Million)

YEARS	BENEFITS: Increase in Agri. Prod.	BENEFITS: Savings in off-Road Hauling Exp.	BENEFITS: Canal O&M Savings	BENEFITS: Vehicle Operating Cost (VOC) Savings	BENEFITS: Time Savings	BENEFITS: Total Benefits	COSTS: Capital Cost	COSTS: O & M Cost	COSTS: Total Cost	CASH FLOW	PRESENT WORTH: Benefits @ 12%	PRESENT WORTH: Costs @ 12%	PRESENT WORTH: CASH FLOW 10%	PRESENT WORTH: CASH FLOW 12%
0	0.00	0.00	0.00	0.00	0.00	0.00	0.00	0.00	0.00	0.00	0.00	0.00	0.00	0.00
1	0.00	0.00	0.00	0.00	0.00	0.00	77.55	0.00	77.55	-77.55	0.00	69.24	-70.50	-69.24
2	0.12	0.21	0.11	2.54	0.66	3.64	68.81	0.51	69.32	-65.68	2.90	55.26	-54.28	-52.36
3	0.56	0.50	0.25	6.18	1.60	9.09	53.76	1.19	54.95	-45.86	6.47	39.11	-34.45	-32.64
4	1.45	0.89	0.43	11.03	2.84	16.64	53.32	2.04	55.36	-38.72	10.58	35.18	-26.45	-24.61
5	2.74	1.30	0.61	16.27	4.17	25.10	36.09	2.89	38.99	-13.89	14.24	22.12	-8.62	-7.88
6	4.02	1.59	0.72	19.95	5.08	31.36	0.00	3.40	3.40	27.95	15.89	1.72	15.78	14.16
7	4.81	1.65	0.72	20.79	5.26	33.22	0.00	3.40	3.40	29.82	15.03	1.54	15.30	13.49
8	5.61	1.71	0.72	21.67	5.44	35.14	0.00	3.40	3.40	31.74	14.19	1.37	14.81	12.82
9	6.40	1.77	0.72	22.59	5.63	37.11	0.00	3.40	3.40	33.71	13.38	1.23	14.29	12.15
10	7.19	1.83	0.72	23.56	5.83	39.13	0.00	3.40	3.40	35.73	12.60	1.10	13.77	11.50
11	7.75	1.90	0.72	24.57	6.03	40.97	0.00	3.40	3.40	37.57	11.78	0.98	13.17	10.80
12	8.31	1.97	0.72	25.64	6.24	42.88	0.00	3.40	3.40	39.47	11.01	0.87	12.58	10.13
13	8.87	2.04	0.72	26.75	6.46	44.85	0.00	3.40	3.40	41.44	10.28	0.78	12.00	9.50
14	9.43	2.12	0.72	27.93	6.69	46.89	0.00	3.40	3.40	43.48	9.59	0.70	11.45	8.90
15	9.98	2.20	0.72	29.16	6.92	48.98	0.00	3.40	3.40	45.57	8.95	0.62	10.91	8.33
16	10.53	2.28	0.72	30.45	7.16	51.14	0.00	3.40	3.40	47.74	8.34	0.56	10.39	7.79
17	11.08	2.37	0.72	31.81	7.41	53.38	0.00	3.40	3.40	49.98	7.77	0.50	9.89	7.28
18	11.63	2.45	0.72	33.23	7.67	55.71	0.00	3.40	3.40	52.30	7.24	0.44	9.41	6.80
19	12.18	2.54	0.72	34.73	7.49	57.67	0.00	3.40	3.40	54.26	6.70	0.40	8.87	6.30
20	12.72	2.64	0.72	36.31	8.22	60.61	0.00	3.40	3.40	57.20	6.28	0.35	8.50	5.93
21	12.72	2.74	0.72	36.31	8.51	61.00	0.00	3.40	3.40	57.60	5.65	0.32	7.78	5.33
22	12.72	2.86	0.72	36.31	8.81	61.42	0.00	3.40	3.40	58.01	5.08	0.28	7.13	4.79
23	12.72	2.70	0.72	36.31	9.11	61.56	0.00	3.40	3.40	58.16	4.54	0.25	6.49	4.29
24	12.72	3.09	0.72	36.31	9.43	62.27	0.00	3.40	3.40	58.87	4.10	0.22	5.98	3.88
25	12.72	3.21	0.72	36.31	9.76	62.72	0.00	3.40	3.40	59.32	3.69	0.20	5.47	3.49
26	12.72	3.34	0.72	36.31	10.11	63.20	0.00	3.40	3.40	59.80	3.32	0.18	5.02	3.14
27	12.72	3.47	0.72	36.31	10.46	63.68	0.00	3.40	3.40	60.28	2.99	0.16	4.60	2.83
28	12.72	3.61	0.72	36.31	10.83	64.19	0.00	3.40	3.40	60.79	2.69	0.14	4.22	2.55
29	12.72	3.75	0.72	36.31	11.20	64.70	0.00	3.40	3.40	61.30	2.42	0.13	3.86	2.29
30	12.72	3.90	0.72	36.31	11.60	65.25	0.00	3.40	3.40	61.84	2.18	0.11	3.54	2.06
TOTAL	262.58	66.62	19.43	808.23	206.62	1363.48	289.53	91.74	381.26	982.22	229.87	236.07	40.91	-6.20

NET PRESENT WORTH = Rs. -6.1996 million

B/C RATIO = 0.97 : 1

IRR = 11.74 %

647

TABLE 9.29.7

ECONOMIC ANALYSIS OF CANAL ROADS IN GOTKI SYSTEM:
BENEFITS, COSTS AND MEASURES OF PROJECT DESIRABILITY
(Rs.Million)

YEARS	BENEFITS: Increase in Agri. Prod.	BENEFITS: Savings in off-Road Hauling Exp.	BENEFITS: Canal O&M Savings	BENEFITS: Vehicle Operating Cost (VOC) Savings	BENEFITS: Time Savings	BENEFITS: Total Benefits	COSTS: Capital Cost	COSTS: O & M Cost	COSTS: Total Cost	CASH FLOW	PRESENT WORTH: Benefits @ 12%	PRESENT WORTH: Costs @ 12%	PRESENT WORTH: CASH FLOW 14%	PRESENT WORTH: CASH FLOW 16%
0	0.00	0.00	0.00	0.00	0.00	0.00	0.00	0.00	0.00	0.00	0.00	0.00	0.00	0.00
1	0.00	0.00	0.00	0.00	0.00	0.00	54.70	0.00	54.70	-54.70	0.00	48.83	-47.98	-47.15
2	0.28	0.11	0.07	1.67	0.12	2.25	48.53	0.38	48.91	-46.66	1.79	38.99	-35.90	-34.68
3	1.29	0.26	0.16	4.08	0.30	6.08	37.91	0.88	38.79	-32.71	4.33	27.61	-22.08	-20.96
4	3.31	0.45	0.27	7.32	0.53	11.88	37.61	1.51	39.12	-27.24	7.55	24.86	-16.13	-15.04
5	6.25	0.65	0.39	10.86	0.77	18.91	25.46	2.14	27.60	-8.68	10.73	15.66	-4.51	-4.13
6	9.20	0.78	0.46	13.38	0.93	24.75	0.00	2.52	2.52	22.23	12.54	1.28	10.13	9.12
7	11.04	0.78	0.46	14.02	0.96	27.26	0.00	2.52	2.52	24.75	12.33	1.14	9.89	8.76
8	12.88	0.79	0.46	14.70	0.99	29.82	0.00	2.52	2.52	27.30	12.04	1.02	9.57	8.33
9	14.72	0.80	0.46	15.41	1.02	32.41	0.00	2.52	2.52	29.89	11.69	0.91	9.19	7.86
10	16.56	0.80	0.46	16.17	1.05	35.03	0.00	2.52	2.52	32.52	11.28	0.81	8.77	7.37
11	18.40	0.81	0.46	16.96	1.08	37.70	0.00	2.52	2.52	35.19	10.84	0.72	8.33	6.88
12	20.25	0.81	0.46	17.80	1.11	40.43	0.00	2.52	2.52	37.91	10.38	0.65	7.87	6.39
13	22.09	0.82	0.46	18.68	1.14	43.18	0.00	2.52	2.52	40.67	9.90	0.58	7.40	5.91
14	23.93	0.82	0.46	19.61	1.18	46.00	0.00	2.52	2.52	43.48	9.41	0.52	6.94	5.44
15	25.77	0.83	0.46	20.60	1.21	48.86	0.00	2.52	2.52	46.34	8.93	0.46	6.49	5.00
16	27.62	0.83	0.46	21.64	1.25	51.79	0.00	2.52	2.52	49.28	8.45	0.41	6.06	4.58
17	29.46	0.83	0.46	22.74	1.29	54.78	0.00	2.52	2.52	52.26	7.98	0.37	5.63	4.19
18	31.31	0.84	0.46	23.90	1.32	57.82	0.00	2.52	2.52	55.30	7.52	0.33	5.23	3.82
19	33.15	0.84	0.46	25.13	1.36	60.93	0.00	2.52	2.52	58.41	7.07	0.29	4.85	3.48
20	35.00	0.84	0.46	26.42	1.41	64.13	0.00	2.52	2.52	61.61	6.65	0.26	4.48	3.17
21	35.00	0.82	0.46	26.42	1.45	64.15	0.00	2.52	2.52	61.64	5.94	0.23	3.93	2.73
22	35.00	0.81	0.46	26.42	1.49	64.18	0.00	2.52	2.52	61.66	5.30	0.21	3.45	2.35
23	35.00	0.79	0.46	26.42	1.54	64.21	0.00	2.52	2.52	61.69	4.74	0.19	3.03	2.03
24	35.00	0.80	0.46	26.42	1.58	64.26	0.00	2.52	2.52	61.74	4.23	0.17	2.66	1.75
25	35.00	0.82	0.46	26.42	1.63	64.33	0.00	2.52	2.52	61.81	3.78	0.15	2.34	1.51
26	35.00	0.84	0.46	26.42	1.68	64.40	0.00	2.52	2.52	61.88	3.38	0.13	2.05	1.31
27	35.00	0.86	0.46	26.42	1.73	64.47	0.00	2.52	2.52	61.95	3.02	0.12	1.80	1.13
28	35.00	0.88	0.46	26.42	1.78	64.54	0.00	2.52	2.52	62.02	2.70	0.11	1.58	0.97
29	35.00	0.90	0.46	26.42	1.83	64.61	0.00	2.52	2.52	62.09	2.42	0.09	1.39	0.84
30	35.00	0.92	0.46	26.42	1.89	64.69	0.00	2.52	2.52	62.17	2.16	0.08	1.22	0.72
TOTAL	692.51	22.11	12.32	575.29	35.62	1337.84	204.20	67.86	272.06	1065.79	209.08	167.16	7.69	-16.32

NET PRESENT WORTH = Rs. 41.92 million

B/C RATIO = 1.25 : 1

IRR = 14.64 %

648

TABLE 9.29.8

ECONOMIC ANALYSIS OF CANAL ROADS IN ROHRI SYSTEM:
BENEFITS, COSTS AND MEASURES OF PROJECT DESIRABILITY
(Rs.Million)

YEARS	BENEFITS: Increase in Agri. Prod.	BENEFITS: Savings in off-Road Hauling Exp.	BENEFITS: Canal O&M Savings	BENEFITS: Vehicle Operating Cost (VOC) Savings	BENEFITS: Time Savings	BENEFITS: Total Benefits	COSTS: Capital Cost	COSTS: O & M Cost	COSTS: Total Cost	CASH FLOW	PRESENT WORTH: Benefits @ 12%	PRESENT WORTH: Costs @ 12%	PRESENT WORTH: CASH FLOW 12%	PRESENT WORTH: CASH FLOW 14%
0	0.00	0.00	0.00	0.00	0.00	0.00	0.00	0.00	0.00	0.00	0.00	0.00	0.00	0.00
1	0.00	0.00	0.00	0.00	0.00	0.00	24.96	0.00	24.96	-24.96	0.00	22.28	-22.28	-21.89
2	0.08	0.06	0.02	0.78	0.14	1.09	22.14	0.17	22.32	-21.23	0.87	17.79	-16.92	-16.34
3	0.35	0.15	0.05	1.91	0.34	2.80	17.30	0.40	17.70	-14.90	2.00	12.60	-10.60	-10.06
4	0.90	0.26	0.09	3.43	0.60	5.28	17.16	0.69	17.85	-12.57	3.36	11.34	-7.99	-7.44
5	1.71	0.38	0.13	5.09	0.87	8.18	11.62	0.98	12.59	-4.41	4.64	7.15	-2.50	-2.29
6	2.51	0.47	0.15	6.27	1.06	10.46	0.00	1.15	1.15	9.31	5.30	0.58	4.71	4.24
7	3.01	0.48	0.15	6.57	1.09	11.29	0.00	1.15	1.15	10.14	5.11	0.52	4.59	4.05
8	3.51	0.48	0.15	6.88	1.11	12.13	0.00	1.15	1.15	10.98	4.90	0.46	4.44	3.85
9	4.01	0.49	0.15	7.21	1.14	13.00	0.00	1.15	1.15	11.85	4.69	0.41	4.27	3.64
10	4.51	0.50	0.15	7.56	1.18	13.90	0.00	1.15	1.15	12.75	4.48	0.37	4.10	3.44
11	5.01	0.51	0.15	7.93	1.21	14.80	0.00	1.15	1.15	13.65	4.26	0.33	3.92	3.23
12	5.51	0.51	0.15	8.32	1.24	15.73	0.00	1.15	1.15	14.58	4.04	0.30	3.74	3.03
13	6.01	0.52	0.15	8.72	1.27	16.67	0.00	1.15	1.15	15.52	3.82	0.26	3.56	2.83
14	6.51	0.53	0.15	9.15	1.31	17.65	0.00	1.15	1.15	16.50	3.61	0.24	3.38	2.63
15	7.01	0.53	0.15	9.61	1.34	18.64	0.00	1.15	1.15	17.49	3.40	0.21	3.19	2.45
16	7.50	0.54	0.15	10.09	1.38	19.65	0.00	1.15	1.15	18.50	3.21	0.19	3.02	2.27
17	8.00	0.55	0.15	10.59	1.42	20.70	0.00	1.15	1.15	19.55	3.02	0.17	2.85	2.11
18	8.50	0.55	0.15	11.12	1.45	21.77	0.00	1.15	1.15	20.62	2.83	0.15	2.68	1.95
19	8.99	0.56	0.15	11.69	1.49	22.87	0.00	1.15	1.15	21.72	2.66	0.13	2.52	1.80
20	9.49	0.56	0.15	12.28	1.53	24.01	0.00	1.15	1.15	22.86	2.49	0.12	2.37	1.66
21	9.49	0.54	0.15	12.28	1.58	24.04	0.00	1.15	1.15	22.89	2.23	0.11	2.12	1.46
22	9.49	0.53	0.15	12.28	1.62	24.07	0.00	1.15	1.15	22.92	1.99	0.10	1.89	1.28
23	9.49	0.51	0.15	12.28	1.66	24.09	0.00	1.15	1.15	22.94	1.78	0.08	1.69	1.13
24	9.49	0.50	0.15	12.28	1.71	24.13	0.00	1.15	1.15	22.98	1.59	0.08	1.51	0.99
25	9.49	0.49	0.15	12.28	1.75	24.16	0.00	1.15	1.15	23.01	1.42	0.07	1.35	0.87
26	9.49	0.50	0.15	12.28	1.80	24.22	0.00	1.15	1.15	23.07	1.27	0.06	1.21	0.76
27	9.49	0.52	0.15	12.28	1.85	24.29	0.00	1.15	1.15	23.14	1.14	0.05	1.09	0.67
28	9.49	0.54	0.15	12.28	1.90	24.36	0.00	1.15	1.15	23.21	1.02	0.05	0.97	0.59
29	9.49	0.56	0.15	12.28	1.95	24.43	0.00	1.15	1.15	23.28	0.91	0.04	0.87	0.52
30	9.49	0.58	0.15	12.28	2.00	24.50	0.00	1.15	1.15	23.35	0.82	0.04	0.78	0.46
TOTAL	188.02	13.88	3.99	268.03	38.99	512.92	93.18	30.99	124.17	388.74	82.82	76.28	6.54	-6.09

NET PRESENT WORTH = Rs. 6.54 million

B/C RATIO = 1.09 : 1

IRR = 13.04 %

649

TABLE 9.29.9

ECONOMIC ANALYSIS OF CANAL ROADS IN DADU SYSTEM:
BENEFITS, COSTS AND MEASURES OF PROJECT DESIRABILITY
(Rs.Million)

YEARS	BENEFITS: Increase in Agri. Prod.	Savings in off-Road Hauling Exp.	Canal O&M Savings	Vehicle Operating Cost (VOC) Savings	Time Savings	Total Benefits	COSTS: Capital Cost	O & M Cost	Total Cost	CASH FLOW	PRESENT WORTH: Benefits @ 12%	Costs @ 12%	CASH FLOW 10%	CASH FLOW 12%
0	0.00	0.00	0.00	0.00	0.00	0.00	0.00	0.00	0.00	0.00	0.00	0.00	0.00	0.00
1	0.00	0.00	0.00	0.00	0.00	0.00	25.68	0.00	25.68	-25.68	0.00	22.92	-23.34	-22.92
2	0.02	0.04	0.03	0.95	0.10	1.13	22.78	0.18	22.96	-21.83	0.90	18.30	-18.04	-17.40
3	0.11	0.93	0.07	2.30	0.25	3.66	17.80	0.42	18.22	-14.56	2.60	12.97	-10.94	-10.36
4	0.29	0.17	0.12	4.10	0.45	5.13	17.65	0.72	18.37	-13.25	3.26	11.68	-9.05	-8.42
5	0.55	0.25	0.17	6.06	0.65	7.67	11.95	1.02	12.97	-5.30	4.35	7.36	-3.29	-3.01
6	0.81	0.30	0.20	7.43	0.79	9.53	0.00	1.20	1.20	8.33	4.83	0.61	4.70	4.22
7	0.98	0.31	0.20	7.74	0.82	10.05	0.00	1.20	1.20	8.85	4.55	0.54	4.54	4.00
8	0.15	0.32	0.20	8.07	0.84	9.58	0.00	1.20	1.20	8.38	3.87	0.48	3.91	3.39
9	1.32	0.33	0.20	8.42	0.87	11.13	0.00	1.20	1.20	9.94	4.01	0.43	4.21	3.58
10	1.50	0.34	0.20	8.78	0.90	11.71	0.00	1.20	1.20	10.52	3.77	0.39	4.06	3.39
11	1.67	0.35	0.20	9.16	0.93	12.30	0.00	1.20	1.20	11.11	3.54	0.34	3.89	3.19
12	1.85	0.35	0.20	9.56	0.96	12.92	0.00	1.20	1.20	11.72	3.32	0.31	3.73	3.01
13	2.03	0.36	0.20	9.98	0.99	13.55	0.00	1.20	1.20	12.36	3.11	0.27	3.58	2.83
14	2.21	0.37	0.20	10.41	1.02	14.21	0.00	1.20	1.20	13.01	2.91	0.24	3.43	2.66
15	2.40	0.38	0.20	10.87	1.05	14.89	0.00	1.20	1.20	13.70	2.72	0.22	3.28	2.50
16	2.58	0.39	0.20	11.35	1.08	15.59	0.00	1.20	1.20	14.40	2.54	0.20	3.13	2.35
17	2.77	0.40	0.20	11.85	1.12	16.33	0.00	1.20	1.20	15.14	2.38	0.17	2.99	2.20
18	2.96	0.40	0.20	12.38	1.15	17.09	0.00	1.20	1.20	15.89	2.22	0.16	2.86	2.07
19	3.15	0.41	0.20	12.94	1.19	17.88	0.00	1.20	1.20	16.69	2.08	0.14	2.73	1.94
20	3.35	0.42	0.20	13.52	1.23	18.71	0.00	1.20	1.20	17.51	1.94	0.12	2.60	1.82
21	3.35	0.40	0.20	13.52	1.27	18.74	0.00	1.20	1.20	17.54	1.73	0.11	2.37	1.62
22	3.35	0.39	0.20	13.52	1.31	18.76	0.00	1.20	1.20	17.56	1.55	0.10	2.16	1.45
23	3.35	0.37	0.20	13.52	1.35	18.78	0.00	1.20	1.20	17.59	1.39	0.09	1.96	1.30
24	3.35	0.38	0.20	13.52	1.39	18.83	0.00	1.20	1.20	17.63	1.24	0.08	1.79	1.16
25	3.35	0.39	0.20	13.52	1.44	18.90	0.00	1.20	1.20	17.70	1.11	0.07	1.63	1.04
26	3.35	0.41	0.20	13.52	1.49	18.96	0.00	1.20	1.20	17.77	1.00	0.06	1.49	0.93
27	3.35	0.43	0.20	13.52	1.53	19.02	0.00	1.20	1.20	17.83	0.89	0.06	1.36	0.84
28	3.35	0.45	0.20	13.52	1.58	19.09	0.00	1.20	1.20	17.90	0.80	0.05	1.24	0.75
29	3.35	0.47	0.20	13.52	1.63	19.16	0.00	1.20	1.20	17.96	0.72	0.04	1.13	0.67
30	3.35	0.49	0.20	13.52	1.68	19.23	0.00	1.20	1.20	18.03	0.64	0.04	1.03	0.60
TOTAL	64.20	10.97	5.26	301.05	31.06	412.53	95.86	32.23	128.09	284.44	69.95	78.55	5.17	-8.59

NET PRESENT WORTH = Rs. -8.59 million

B/C RATIO = 0.89 : 1

IRR = 10.75 %

650

TABLE 9.29.10

ECONOMIC ANALYSIS OF CANAL ROADS IN KABUL SYSTEM:
BENEFITS, COSTS AND MEASURES OF PROJECT DESIRABILITY
(Rs.Million)

YEARS	BENEFITS: Increase in Agri. Prod.	Savings in off-Road Hauling Exp.	Canal O&M Savings	Vehicle Operating Cost (VOC) Savings	Time Savings	Total Benefits	COSTS: Capital Cost	O & M Cost	Total Cost	CASH FLOW	PRESENT WORTH: Benefits @ 12%	Costs @ 12%	CASH FLOW 22%	CASH FLOW 24%
0	0.00	0.00	0.00	0.00	0.00	0.00	0.00	0.00	0.00	0.00	0.00	0.00	0.00	0.00
1	0.00	0.00	0.00	0.00	0.00	0.00	6.19	0.00	6.19	-6.19	0.00	5.53	-5.07	-4.99
2	0.06	0.03	0.01	0.30	0.02	0.42	5.49	0.03	5.52	-5.10	0.34	4.40	-3.43	-3.32
3	0.28	0.07	0.02	0.74	0.06	1.17	4.29	0.07	4.36	-3.19	0.83	3.10	-1.76	-1.67
4	0.72	0.13	0.03	1.33	0.10	2.31	4.26	0.12	4.37	-2.07	1.47	2.78	-0.93	-0.87
5	1.36	0.18	0.04	1.97	0.14	3.70	2.88	0.16	3.05	0.65	2.10	1.73	0.24	0.22
6	1.99	0.22	0.05	2.42	0.17	4.85	0.00	0.19	0.19	4.66	2.46	0.10	1.41	1.28
7	2.39	0.22	0.05	2.54	0.17	5.37	0.00	0.19	0.19	5.17	2.43	0.09	1.29	1.15
8	2.79	0.22	0.05	2.65	0.18	5.89	0.00	0.19	0.19	5.70	2.38	0.08	1.16	1.02
9	3.18	0.23	0.05	2.77	0.18	6.41	0.00	0.19	0.19	6.22	2.31	0.07	1.04	0.90
10	3.57	0.23	0.05	2.90	0.18	6.93	0.00	0.19	0.19	6.74	2.23	0.06	0.92	0.78
11	3.97	0.23	0.05	3.04	0.19	7.48	0.00	0.19	0.19	7.28	2.15	0.06	0.82	0.68
12	4.36	0.23	0.05	3.18	0.19	8.01	0.00	0.19	0.19	7.82	2.06	0.05	0.72	0.59
13	4.75	0.24	0.05	3.32	0.20	8.56	0.00	0.19	0.19	8.37	1.96	0.04	0.63	0.51
14	5.14	0.24	0.05	3.48	0.20	9.11	0.00	0.19	0.19	8.91	1.86	0.04	0.55	0.44
15	5.53	0.24	0.05	3.64	0.21	9.67	0.00	0.19	0.19	9.48	1.77	0.04	0.48	0.38
16	5.92	0.24	0.05	3.81	0.21	10.23	0.00	0.19	0.19	10.04	1.67	0.03	0.42	0.32
17	6.31	0.25	0.05	3.99	0.21	10.81	0.00	0.19	0.19	10.61	1.57	0.03	0.36	0.27
18	6.70	0.25	0.05	4.18	0.22	11.40	0.00	0.19	0.19	11.21	1.48	0.02	0.31	0.23
19	7.09	0.25	0.05	4.38	0.22	11.99	0.00	0.19	0.19	11.79	1.39	0.02	0.27	0.20
20	7.47	0.26	0.05	4.58	0.23	12.59	0.00	0.19	0.19	12.39	1.30	0.02	0.23	0.17
21	7.47	0.26	0.05	4.58	0.23	12.59	0.00	0.19	0.19	12.40	1.17	0.02	0.19	0.14
22	7.47	0.26	0.05	4.58	0.24	12.60	0.00	0.19	0.19	12.41	1.04	0.02	0.16	0.11
23	7.47	0.26	0.05	4.58	0.24	12.60	0.00	0.19	0.19	12.41	0.93	0.01	0.13	0.09
24	7.47	0.27	0.05	4.58	0.25	12.62	0.00	0.19	0.19	12.42	0.83	0.01	0.11	0.07
25	7.47	0.27	0.05	4.58	0.26	12.63	0.00	0.19	0.19	12.44	0.74	0.01	0.09	0.06
26	7.47	0.27	0.05	4.58	0.26	12.63	0.00	0.19	0.19	12.44	0.66	0.01	0.07	0.05
27	7.47	0.27	0.05	4.58	0.27	12.64	0.00	0.19	0.19	12.45	0.59	0.01	0.06	0.04
28	7.47	0.28	0.05	4.58	0.27	12.65	0.00	0.19	0.19	12.45	0.53	0.01	0.05	0.03
29	7.47	0.78	0.05	4.58	0.28	13.16	0.00	0.19	0.19	12.97	0.49	0.01	0.04	0.03
30	7.47	0.28	0.05	4.58	0.29	12.67	0.00	0.19	0.19	12.48	0.42	0.01	0.03	0.02
TOTAL	148.28	7.15	1.32	101.04	5.87	263.66	23.12	5.17	28.29	235.37	41.17	18.39	0.58	-1.09

NET PRESENT WORTH = Rs. 22.77 million

B/C RATIO = 2.24 : 1

IRR = 22.69 %

651

TABLE 9.29.11

ECONOMIC ANALYSIS OF CANAL ROADS IN PAHARPUR SYSTEM:
BENEFITS, COSTS AND MEASURES OF PROJECT DESIRABILITY
(Rs.Million)

YEARS	BENEFITS: Increase in Agri. Prod.	BENEFITS: Savings in off-Road Hauling Exp.	BENEFITS: Canal O&M Savings	BENEFITS: Vehicle Operating Cost(VOC) Savings	BENEFITS: Time Savings	BENEFITS: Total Benefits	COSTS: Capital Cost	COSTS: O & M Cost	COSTS: Total Cost	CASH FLOW	PRESENT WORTH: Benefits @ 12%	PRESENT WORTH: Costs @ 12%	PRESENT WORTH: CASH FLOW 18%	PRESENT WORTH: CASH FLOW 20%
0	0.00	0.00	0.00	0.00	0.00	0.00	0.00	0.00	0.00	0.00	0.00	0.00	0.00	0.00
1	0.00	0.00	0.00	0.00	0.00	0.00	6.96	0.00	6.96	-6.96	0.00	6.21	-5.90	-5.80
2	0.02	0.01	0.00	0.44	0.04	0.51	6.17	0.05	6.22	-5.71	0.41	4.96	-4.10	-3.96
3	0.11	0.03	0.00	1.09	0.10	1.32	4.82	0.11	4.93	-3.61	0.94	3.51	-2.20	-2.09
4	0.27	0.05	0.00	1.95	0.18	2.45	4.79	0.19	4.98	-2.52	1.56	3.16	-1.30	-1.22
5	0.52	0.07	0.00	2.90	0.27	3.77	3.24	0.27	3.51	0.26	2.14	1.99	0.11	0.10
6	0.76	0.09	0.00	3.59	0.33	4.77	0.00	0.32	0.32	4.45	2.42	0.16	1.65	1.49
7	0.92	0.10	0.00	3.77	0.34	5.13	0.00	0.32	0.32	4.81	2.32	0.14	1.51	1.34
8	1.07	0.11	0.00	3.96	0.35	5.48	0.00	0.32	0.32	5.17	2.21	0.13	1.37	1.20
9	1.23	0.11	0.00	4.16	0.36	5.86	0.00	0.32	0.32	5.54	2.11	0.11	1.25	1.07
10	1.39	0.12	0.00	4.37	0.37	6.25	0.00	0.32	0.32	5.93	2.01	0.10	1.13	0.96
11	1.47	0.13	0.00	4.59	0.38	6.57	0.00	0.32	0.32	6.25	1.89	0.09	1.01	0.84
12	1.55	0.14	0.00	4.82	0.40	6.91	0.00	0.32	0.32	6.59	1.77	0.08	0.90	0.74
13	1.64	0.14	0.00	5.07	0.41	7.26	0.00	0.32	0.32	6.95	1.66	0.07	0.81	0.65
14	1.72	0.15	0.00	5.33	0.42	7.62	0.00	0.32	0.32	7.30	1.56	0.06	0.72	0.57
15	1.80	0.16	0.00	5.60	0.44	8.00	0.00	0.32	0.32	7.69	1.46	0.06	0.64	0.50
16	1.89	0.17	0.00	5.89	0.45	8.40	0.00	0.32	0.32	8.09	1.37	0.05	0.57	0.44
17	1.97	0.18	0.00	6.20	0.47	8.82	0.00	0.32	0.32	8.50	1.28	0.05	0.51	0.38
18	2.06	0.19	0.00	6.52	0.48	9.25	0.00	0.32	0.32	8.93	1.20	0.04	0.45	0.34
19	2.15	0.20	0.00	6.86	0.50	9.71	0.00	0.32	0.32	9.40	1.13	0.04	0.40	0.29
20	2.24	0.22	0.00	7.22	0.51	10.18	0.00	0.32	0.32	9.86	1.06	0.03	0.36	0.26
21	2.24	0.22	0.00	7.22	0.53	10.21	0.00	0.32	0.32	9.89	0.94	0.03	0.31	0.22
22	2.24	0.23	0.00	7.22	0.55	10.24	0.00	0.32	0.32	9.92	0.85	0.03	0.26	0.18
23	2.24	0.24	0.00	7.22	0.57	10.26	0.00	0.32	0.32	9.95	0.76	0.02	0.22	0.15
24	2.24	0.25	0.00	7.22	0.58	10.28	0.00	0.32	0.32	9.97	0.68	0.02	0.19	0.13
25	2.24	0.26	0.00	7.22	0.60	10.31	0.00	0.32	0.32	9.99	0.61	0.02	0.16	0.10
26	2.24	0.26	0.00	7.22	0.62	10.34	0.00	0.32	0.32	10.02	0.54	0.02	0.14	0.09
27	2.24	0.27	0.00	7.22	0.64	10.37	0.00	0.32	0.32	10.05	0.49	0.01	0.12	0.07
28	2.24	0.28	0.00	7.22	0.67	10.41	0.00	0.32	0.32	10.09	0.44	0.01	0.10	0.06
29	2.24	0.29	0.00	7.22	0.69	10.44	0.00	0.32	0.32	10.12	0.39	0.01	0.08	0.05
30	2.24	0.30	0.00	7.22	0.71	10.47	0.00	0.32	0.32	10.15	0.35	0.01	0.07	0.04
TOTAL	47.18	4.99	0.00	156.45	12.96	221.58	25.98	8.52	34.50	187.08	36.54	21.24	1.56	-0.80

NET PRESENT WORTH = Rs. 15.30 million

B/C RATIO = 1.72 : 1

IRR = 19.32 %

652

TABLE 9.29.12

ECONOMIC ANALYSIS OF CANAL ROADS IN MARWAT SYSTEM:
BENEFITS, COSTS AND MEASURES OF PROJECT DESIRABILITY
(Rs.Million)

YEARS	BENEFITS: Increase in Agri. Prod.	Savings in off-Road Hauling Exp.	Canal O&M Savings	Vehicle Operating Cost(VOC) Savings	Time Savings	Total Benefits	COSTS: Capital Cost	O & M Cost	Total Cost	CASH FLOW	PRESENT WORTH: Benefits @ 12%	Costs @ 12%	CASH FLOW 36%	CASH FLOW 38%
0	0.00	0.00	0.00	0.00	0.00	0.00	0.00	0.00	0.00	0.00	0.00	0.00	0.00	0.00
1	0.00	0.00	0.00	0.00	0.00	0.00	7.09	0.00	7.09	-7.09	0.00	6.33	-5.21	-5.14
2	0.21	0.03	.00	0.45	0.10	0.79	6.29	0.04	6.33	-5.54	0.63	5.05	-2.99	-2.91
3	1.00	0.06	0.01	1.11	0.24	2.42	4.91	0.10	5.01	-2.59	1.72	3.57	-1.03	-0.99
4	2.56	0.11	0.02	1.98	0.42	5.09	4.87	0.17	5.04	0.05	3.23	3.20	0.01	0.01
5	4.85	0.17	0.02	2.92	0.61	8.57	3.30	0.24	3.54	5.04	4.86	2.01	1.08	1.01
6	7.14	0.20	0.03	3.59	0.74	11.69	0.00	0.28	0.28	11.42	5.92	0.14	1.80	1.65
7	8.58	0.21	0.03	3.74	0.76	13.32	0.00	0.28	0.28	13.04	6.02	0.13	1.52	1.37
8	10.03	0.22	0.03	3.90	0.79	14.97	0.00	0.28	0.28	14.69	6.05	0.11	1.26	1.12
9	11.48	0.23	0.03	4.07	0.81	16.62	0.00	0.28	0.28	16.34	5.99	0.10	1.03	0.90
10	12.93	0.24	0.03	4.25	0.83	18.28	0.00	0.28	0.28	18.00	5.89	0.09	0.83	0.72
11	13.48	0.26	0.03	4.44	0.85	19.05	0.00	0.28	0.28	18.77	5.48	0.08	0.64	0.54
12	14.04	0.27	0.03	4.63	0.88	19.85	0.00	0.28	0.28	19.57	5.10	0.07	0.49	0.41
13	14.60	0.29	0.03	4.84	0.90	20.65	0.00	0.28	0.28	20.38	4.73	0.06	0.37	0.31
14	15.16	0.30	0.03	5.05	0.93	21.47	0.00	0.28	0.28	21.19	4.39	0.06	0.29	0.23
15	15.72	0.32	0.03	5.28	0.95	22.29	0.00	0.28	0.28	22.01	4.07	0.05	0.22	0.18
16	16.28	0.34	0.03	5.51	0.98	23.13	0.00	0.28	0.28	22.86	3.77	0.05	0.17	0.13
17	16.84	0.35	0.03	5.76	1.01	23.99	0.00	0.28	0.28	23.71	3.49	0.04	0.13	0.10
18	17.40	0.37	0.03	6.02	1.04	24.85	0.00	0.28	0.28	24.58	3.23	0.04	0.10	0.07
19	17.97	0.39	0.03	6.29	1.06	25.73	0.00	0.28	0.28	25.46	2.99	0.03	0.07	0.06
20	18.53	0.41	0.03	6.58	1.09	26.63	0.00	0.28	0.28	26.35	2.76	0.03	0.06	0.04
21	18.53	0.42	0.03	6.58	1.12	26.67	0.00	0.28	0.28	26.39	2.47	0.03	0.04	0.03
22	18.53	0.43	0.03	6.58	1.16	26.73	0.00	0.28	0.28	26.45	2.21	0.02	0.03	0.02
23	18.53	0.45	0.03	6.58	1.19	26.77	0.00	0.28	0.28	26.49	1.98	0.02	0.02	0.02
24	18.53	0.46	0.03	6.58	1.22	26.82	0.00	0.28	0.28	26.54	1.77	0.02	0.02	0.01
25	18.53	0.48	0.03	6.58	1.26	26.87	0.00	0.28	0.28	26.59	1.58	0.02	0.01	0.01
26	18.53	0.50	0.03	6.58	1.29	26.92	0.00	0.28	0.28	26.64	1.41	0.01	0.01	0.01
27	18.53	0.51	0.03	6.58	1.33	26.97	0.00	0.28	0.28	26.69	1.26	0.01	0.01	.00
28	18.53	0.53	0.03	6.58	1.36	27.02	0.00	0.28	0.28	26.74	1.13	0.01	.00	.00
29	18.53	0.55	0.03	6.58	1.40	27.08	0.00	0.28	0.28	26.80	1.01	0.01	.00	.00
30	18.53	0.56	0.03	6.58	1.44	27.14	0.00	0.28	0.28	26.86	0.91	0.01	.00	.00
TOTAL	404.10	9.66	0.73	146.15	27.76	588.40	26.46	7.52	33.98	554.42	96.07	21.39	0.97	-0.07

NET PRESENT WORTH = Rs. 74.69 million

B/C RATIO = 4.49 : 1

IRR = 37.87 %

153

TABLE 9.29.13

ECONOMIC ANALYSIS OF CANAL ROADS IN UPPER SWAT SYSTEM:
BENEFITS, COSTS AND MEASURES OF PROJECT DESIRABILITY
(Rs.Million)

YEARS	BENEFITS: Increase in Agri. Prod.	Savings in off-Road Hauling Exp.	Canal O&M Savings	Vehicle Operating Cost(VOC) Savings	Time Savings	Total Benefits	COSTS: Capital Cost	D & M Cost	Total Cost	CASH FLOW	PRESENT WORTH: Benefits @ 12%	Costs @ 12%	CASH FLOW 28%	CASH FLOW 30%
0	0.00	0.00	0.00	0.00	0.00	0.00	0.00	0.00	0.00	0.00	0.00	0.00	0.00	0.00
1	0.00	0.00	0.00	0.00	0.00	0.00	25.89	0.00	25.89	-25.89	0.00	23.12	-20.23	-19.92
2	0.43	0.24	0.02	1.31	0.20	2.20	22.97	0.12	23.09	-20 89	1.76	18.41	-12.75	-12.36
3	2.03	0.58	0.05	3.18	0.49	6.34	17.95	0.29	18.23	-11.90	4.51	12.98	-5.67	-5.42
4	5.22	1.04	0.09	5.67	0.86	12.89	17.80	0.50	18.30	-5.40	8.19	11.63	-2.01	-1.89
5	9.87	1.56	0.13	8.37	1.25	21.18	12.05	0.70	12.75	8.43	12.02	7.23	2.45	2.27
6	14.53	1.93	0.16	10.25	1.51	28.37	0.00	0.83	0.83	27.55	14.38	0.42	6.26	5.71
7	17.45	2.01	0.16	10.67	1.55	31.83	0.00	0.83	0.83	31.01	14.40	0.37	5.51	4.94
8	20.37	2.09	0.16	11.11	1.60	35.32	0.00	0.83	0.83	34.50	14.27	0.33	4.79	4.23
9	23.29	2.17	0.16	11.57	1.64	38.82	0.00	0.83	0.83	37.99	14.00	0.30	4.12	3.58
10	26.23	2.25	0.16	12.05	1.69	42.37	0.00	0.83	0.83	41.54	13.64	0.27	3.52	3.01
11	29.16	2.33	0.16	12.55	1.74	45.93	0.00	0.83	0.83	45.10	13.20	0.24	2.98	2.52
12	32.10	2.41	0.16	13.07	1.78	49.51	0.00	0.83	0.83	48.69	12.71	0.21	2.52	2.09
13	35.05	2.48	0.16	13.62	1.83	53.14	0.00	0.83	0.83	52.32	12.18	0.19	2.11	1.73
14	37.99	2.56	0.16	14.20	1.89	56.80	0.00	0.83	0.83	55.97	11.62	0.17	1.77	1.42
15	40.95	2.64	0.16	14.80	1.94	60.49	0.00	0.83	0.83	59.66	11.05	0.15	1.47	1.17
16	43.90	2.72	0.16	15.43	1.99	64.20	0.00	0.83	0.83	63.37	10.47	0.13	1.22	0.95
17	46.86	2.80	0.16	16.09	2.05	67.96	0.00	0.83	0.83	67.13	9.90	0.12	1.01	0.78
18	49.83	2.88	0.16	16.78	2.11	71.76	0.00	0.83	0.83	70.93	9.33	0.11	0.83	0.63
19	52.80	2.96	0.16	17.50	2.16	75.58	0.00	0.83	0.83	74.76	8.78	0.10	0.69	0.51
20	55.77	3.04	0.16	18.26	2.23	79.46	0.00	0.83	0.83	78.63	8.24	0.09	0.56	0.41
21	55.77	3.01	0.16	18.26	2.29	79.49	0.00	0.83	0.83	78.66	7.36	0.08	0.44	0.32
22	55.77	2.98	0.16	18.26	2.35	79.52	0.00	0.83	0.83	78.69	6.57	0.07	0.34	0.25
23	55.77	2.95	0.16	18.26	2.42	79.56	0.00	0.83	0.83	78.74	5.87	0.06	0.27	0.19
24	55.77	2.92	0.16	18.26	2.48	79.59	0.00	0.83	0.83	78.76	5.24	0.05	0.21	0.15
25	55.77	2.89	0.16	18.26	2.55	79.63	0.00	0.83	0.83	78.80	4.68	0.05	0.16	0.11
26	55.77	2.91	0.16	18.26	2.63	79.73	0.00	0.83	0.83	78.90	4.19	0.04	0.13	0.09
27	55.77	2.95	0.16	18.26	2.70	79.83	0.00	0.83	0.83	79.01	3.74	0.04	0.10	0.07
28	55.77	2.98	0.16	18.26	2.78	79.95	0.00	0.83	0.83	79.12	3.35	0.03	0.08	0.05
29	55.77	3.01	0.16	18.26	2.85	80.05	0.00	0.83	0.83	79.23	2.99	0.03	0.06	0.04
30	55.77	3.05	0.16	18.26	2.93	80.17	0.00	0.83	0.83	79.34	2.68	0.03	0.05	0.03
TOTAL	1101.53	70.37	4.18	409.08	56.49	1641.64	96.65	22.23	118.89	1522.76	251.31	77.04	3.00	-2.35

NET PRESENT WORTH = Rs. 174.27 million

B/C RATIO = 3.26 : 1

IRR = 29.12 %

654

TABLE 9.30.1

ECONOMIC ANALYSIS OF CANAL ROADS IN PUNJAB :
BENEFITS, COSTS AND MEASURES OF PROJECT DESIRABILITY
(Rs.Million)

YEARS	BENEFITS: Increase in Agri. Prod.	BENEFITS: Savings in off-Road Hauling Exp.	BENEFITS: Canal O&M Savings	BENEFITS: Vehicle Operating Cost(VOC) Savings	BENEFITS: Time Savings	BENEFITS: Total Benefits	COSTS: Capital Cost	COSTS: O & M Cost	COSTS: Total Cost	CASH FLOW	PRESENT WORTH: Benefits @ 12%	PRESENT WORTH: Costs @ 12%	PRESENT WORTH: CASH FLOW 20%	PRESENT WORTH: CASH FLOW 22%
0	0.00	0.00	0.00	0.00	0.00	0.00	0.00	0.00	0.00	0.00	0.00	0.00	0.00	0.00
1	0.00	0.00	0.00	0.00	0.00	0.00	248.57	0.00	248.57	-248.57	0.00	221.94	-207.14	-203.75
2	2.84	2.71	0.13	7.93	1.45	15.06	220.54	1.73	222.27	-207.21	12.00	177.19	-143.89	-139.22
3	13.19	6.38	0.29	19.41	3.49	42.76	172.30	4.03	176.33	-133.57	30.43	125.51	-77.30	-73.56
4	33.89	11.16	0.50	34.89	6.16	86.60	170.91	6.99	177.89	-91.30	55.03	113.05	-44.03	-41.21
5	63.98	16.28	0.71	51.84	8.99	141.80	115.69	9.78	125.47	16.33	80.46	71.20	6.56	6.04
6	94.04	19.71	0.83	63.98	10.89	189.46	0.00	11.51	11.51	177.95	95.98	5.83	59.59	53.97
7	112.78	20.03	0.83	67.13	11.21	211.98	0.00	11.51	11.51	200.48	95.89	5.21	55.95	49.84
8	131.52	20.33	0.83	70.46	11.52	234.66	0.00	11.51	11.51	223.16	94.78	4.65	51.90	45.47
9	150.22	20.63	0.83	73.95	11.86	257.50	0.00	11.51	11.51	245.99	92.86	4.15	47.68	41.09
10	168.92	20.93	0.83	77.64	12.21	280.54	0.00	11.51	11.51	269.03	90.33	3.71	43.45	36.83
11	182.96	21.14	0.83	81.53	12.56	299.03	0.00	11.51	11.51	287.52	85.96	3.31	38.70	32.26
12	197.01	21.34	0.83	85.63	12.92	317.74	0.00	11.51	11.51	306.23	81.56	2.95	34.35	28.17
13	211.02	21.54	0.83	89.96	13.31	336.66	0.00	11.51	11.51	325.15	77.15	2.64	30.39	24.51
14	225.02	21.73	0.83	94.53	13.70	355.80	0.00	11.51	11.51	344.30	72.80	2.35	26.82	21.28
15	238.98	21.91	0.83	99.34	14.10	375.16	0.00	11.51	11.51	363.65	68.54	2.10	23.60	18.42
16	252.92	22.08	0.83	104.43	14.51	394.77	0.00	11.51	11.51	383.26	64.40	1.88	20.73	15.91
17	266.86	22.24	0.83	109.80	14.93	414.66	0.00	11.51	11.51	403.16	60.39	1.68	18.17	13.72
18	280.74	22.40	0.83	115.46	15.36	434.00	0.00	11.51	11.51	423.29	56.54	1.50	15.90	11.81
19	294.62	22.55	0.83	121.45	15.81	455.27	0.00	11.51	11.51	443.76	52.86	1.34	13.89	10.15
20	308.47	22.69	0.83	127.78	16.26	476.03	0.00	11.51	11.51	464.53	49.35	1.19	12.12	8.71
21	308.47	22.41	0.83	127.78	16.74	476.24	0.00	11.51	11.51	464.73	44.08	1.07	10.10	7.14
22	308.47	22.13	0.83	127.78	17.24	476.46	0.00	11.51	11.51	464.95	39.38	0.95	8.42	5.85
23	308.47	21.84	0.83	127.78	17.73	476.65	0.00	11.51	11.51	465.15	35.17	0.85	7.02	4.80
24	308.47	21.54	0.83	127.78	18.25	476.87	0.00	11.51	11.51	465.37	31.42	0.76	5.85	3.94
25	308.47	21.27	0.83	127.78	18.78	477.13	0.00	11.51	11.51	465.62	28.07	0.68	4.88	3.23
26	308.47	21.08	0.83	127.78	19.33	477.50	0.00	11.51	11.51	465.99	25.08	0.60	4.07	2.65
27	308.47	20.89	0.83	127.78	19.89	477.87	0.00	11.51	11.51	466.36	22.41	0.54	3.39	2.17
28	308.47	20.70	0.83	127.78	20.47	478.25	0.00	11.51	11.51	466.74	20.02	0.48	2.83	1.78
29	308.47	20.49	0.83	127.78	21.07	478.64	0.00	11.51	11.51	467.14	17.89	0.43	2.36	1.46
30	308.47	20.35	0.83	127.78	21.70	479.13	0.00	11.51	11.51	467.63	15.99	0.38	1.97	1.20
TOTAL	6314.68	570.47	22.48	2774.94	412.44	10095.0	928.01	310.2	1238.23	8856.78	1596.83	760.10	78.33	-5.34

NET PRESENT WORTH = Rs836.731 million

B/C RATIO = 2.10 : 1

IRR = 21.87 %

655

TABLE 9.30.2

ECONOMIC ANALYSIS OF CANAL ROADS IN SIND :
BENEFITS, COSTS AND MEASURES OF PROJECT DESIRABILITY
(Rs.Million)

YEARS	BENEFITS: Increase in Agri. Prod.	Savings in off-Road Hauling Exp.	Canal O&M Savings	Vehicle Operating Cost (VOC) Savings	Time Savings	Total Benefits	COSTS: Capital Cost	O & M Cost	Total Cost	CASH FLOW	PRESENT WORTH: Benefits @ 12%	Costs @ 12%	CASH FLOW 12%	CASH FLOW 14%
0	0.00	0.00	0.00	0.00	0.00	0.00	0.00	0.00	0.00	0.00	0.00	0.00	0.00	0.00
1	0.00	0.00	0.00	0.00	0.00	0.00	197.46	0.00	197.46	-197.46	0.00	176.30	-176.30	-173.21
2	0.61	0.69	0.24	6.39	1.07	9.00	175.19	1.34	176.53	-167.53	7.18	140.73	-133.55	-128.91
3	2.85	2.50	0.57	15.56	2.62	24.09	136.87	3.12	139.99	-115.90	17.15	99.64	-82.49	-78.23
4	7.33	2.94	0.97	27.85	4.64	43.73	135.76	5.36	141.12	-97.39	27.79	89.68	-61.89	-57.66
5	13.86	4.32	1.38	41.21	6.79	67.55	91.90	7.59	99.48	-31.93	38.33	56.45	-18.12	-16.58
6	20.39	5.27	1.62	50.65	8.26	86.18	0.00	8.92	8.92	77.26	43.66	4.52	39.14	35.20
7	24.47	5.42	1.62	52.92	8.54	92.97	0.00	8.92	8.92	84.05	42.06	4.04	38.02	33.59
8	27.57	5.58	1.62	55.30	8.80	98.88	0.00	8.92	8.92	89.96	39.94	3.60	36.33	31.54
9	32.66	5.75	1.62	57.81	9.10	106.95	0.00	8.92	8.92	98.02	38.57	3.22	35.35	30.14
10	36.76	5.92	1.62	60.45	9.41	114.16	0.00	8.92	8.92	105.24	36.76	2.87	33.88	28.39
11	40.39	6.08	1.62	63.22	9.72	121.04	0.00	8.92	8.92	112.11	34.80	2.57	32.23	26.53
12	44.05	6.25	1.62	66.14	10.03	128.09	0.00	8.92	8.92	119.16	32.88	2.29	30.59	24.73
13	47.70	6.41	1.62	69.21	10.36	135.30	0.00	8.92	8.92	126.38	31.01	2.05	28.96	23.01
14	51.35	6.59	1.62	72.43	10.72	142.71	0.00	8.92	8.92	133.79	29.20	1.83	27.38	21.37
15	54.99	6.76	1.62	75.83	11.06	150.26	0.00	8.92	8.92	141.34	27.45	1.63	25.82	19.80
16	58.63	6.93	1.62	79.41	11.42	158.02	0.00	8.92	8.92	149.09	25.78	1.46	24.32	18.32
17	62.28	7.11	1.62	83.18	11.81	166.00	0.00	8.92	8.92	157.08	24.18	1.30	22.88	16.93
18	65.93	7.30	1.62	87.15	12.18	174.18	0.00	8.92	8.92	165.25	22.65	1.16	21.49	15.63
19	69.57	7.48	1.62	91.33	12.14	182.15	0.00	8.92	8.92	173.22	21.15	1.04	20.11	14.37
20	73.23	7.67	1.62	95.74	13.02	191.28	0.00	8.92	8.92	182.36	19.83	0.93	18.90	13.27
21	73.23	7.74	1.62	95.74	13.46	191.79	0.00	8.92	8.92	182.87	17.75	0.83	16.93	11.67
22	73.23	7.81	1.62	95.74	13.91	192.31	0.00	8.92	8.92	183.39	15.89	0.74	15.16	10.27
23	73.23	7.62	1.62	95.74	14.36	192.57	0.00	8.92	8.92	183.64	14.21	0.66	13.55	9.02
24	73.23	8.01	1.62	95.74	14.83	193.44	0.00	8.92	8.92	184.51	12.74	0.59	12.16	7.95
25	73.23	8.17	1.62	95.74	15.33	194.10	0.00	8.92	8.92	185.17	11.42	0.52	10.89	7.00
26	73.23	8.37	1.62	95.74	15.85	194.81	0.00	8.92	8.92	185.88	10.23	0.47	9.76	6.16
27	73.23	8.56	1.62	95.74	16.37	195.53	0.00	8.92	8.92	186.60	9.17	0.42	8.75	5.43
28	73.23	8.77	1.62	95.74	16.92	196.28	0.00	8.92	8.92	187.36	8.22	0.37	7.84	4.78
29	73.23	8.98	1.62	95.74	17.47	197.04	0.00	8.92	8.92	188.12	7.37	0.33	7.03	4.21
30	73.23	9.20	1.62	95.74	18.05	197.84	0.00	8.92	8.92	188.92	6.60	0.30	6.31	3.71
TOTAL	1466.92	190.20	43.74	2109.17	328.24	4138.3	737.17	240.5	977.67	3160.60	673.95	602.52	71.43	-31.58

NET PRESENT WORTH = Rs71.4328 million

B/C RATIO = 1.12 : 1

IRR = 13.39 %

656

TABLE 9.30.3

ECONOMIC ANALYSIS OF CANAL ROADS IN NWFP :
BENEFITS, COSTS AND MEASURES OF PROJECT DESIRABILITY
(Rs.Million)

YEARS	BENEFITS: Increase in Agri. Prod.	Savings in off-Road Hauling Exp.	Canal O&M Savings	Vehicle Operating Cost(VOC) Savings	Time Savings	Total Benefits	COSTS: Capital Cost	O & M Cost	Total Cost	CASH FLOW	PRESENT WORTH: Benefits @ 12%	Costs @ 12%	CASH FLOW 28%	CASH FLOW 30
0	0.00	0.00	0.00	0.00	0.00	0.00	0.00	0.00	0.00	0.00	0.00	0.00	0.00	0.00
1	0.00	0.00	0.00	0.00	0.00	0.00	46.13	0.00	46.13	-46.13	0.00	41.18	-36.04	-35.48
2	0.72	0.31	0.03	2.51	0.36	3.93	40.93	0.24	41.17	-37.23	3.14	32.82	-22.73	-22.03
3	3.42	0.75	0.08	6.11	0.89	11.25	31.97	0.57	32.54	-21.29	8.01	23.16	-10.15	-9.69
4	8.77	1.34	0.14	10.93	1.56	22.74	31.71	0.97	32.68	-9.94	14.45	20.77	-3.70	-3.48
5	16.60	1.98	0.20	16.16	2.27	37.21	21.47	1.37	22.84	14.37	21.12	12.96	4.18	3.87
6	24.42	2.45	0.23	19.84	2.75	49.69	0.00	1.61	1.61	48.08	25.17	0.82	10.93	9.96
7	29.34	2.54	0.23	20.71	2.82	55.64	0.00	1.61	1.61	54.03	25.17	0.73	9.60	8.61
8	34.26	2.64	0.23	21.62	2.92	61.67	0.00	1.61	1.61	60.05	24.91	0.65	8.33	7.36
9	39.18	2.74	0.23	22.57	2.99	67.71	0.00	1.61	1.61	66.10	24.42	0.58	7.17	6.23
10	44.12	2.84	0.23	23.56	3.07	73.82	0.00	1.61	1.61	72.21	23.77	0.52	6.12	5.24
11	48.08	2.94	0.23	24.61	3.16	79.02	0.00	1.61	1.61	77.41	22.72	0.46	5.12	4.32
12	52.05	3.05	0.23	25.70	3.25	84.28	0.00	1.61	1.61	82.67	21.63	0.41	4.27	3.55
13	56.04	3.15	0.23	26.85	3.34	89.62	0.00	1.61	1.61	88.00	20.54	0.37	3.55	2.91
14	60.01	3.26	0.23	28.06	3.44	95.00	0.00	1.61	1.61	93.38	19.44	0.33	2.95	2.37
15	64.00	3.37	0.23	29.32	3.54	100.46	0.00	1.61	1.61	98.84	18.35	0.29	2.44	1.93
16	67.99	3.47	0.23	30.64	3.63	105.97	0.00	1.61	1.61	104.36	17.29	0.26	2.01	1.57
17	71.98	3.58	0.23	32.03	3.74	111.57	0.00	1.61	1.61	109.96	16.25	0.23	1.65	1.27
18	75.99	3.69	0.23	33.49	3.85	117.26	0.00	1.61	1.61	115.65	15.25	0.21	1.36	1.03
19	80.01	3.80	0.23	35.03	3.94	123.01	0.00	1.61	1.61	121.40	14.28	0.19	1.11	0.83
20	84.01	3.92	0.23	36.63	4.06	128.85	0.00	1.61	1.61	127.24	13.36	0.17	0.91	0.67
21	84.01	3.91	0.23	36.63	4.17	128.96	0.00	1.61	1.61	127.35	11.94	0.15	0.71	0.52
22	84.01	3.91	0.23	36.63	4.30	129.08	0.00	1.61	1.61	127.47	10.67	0.13	0.56	0.40
23	84.01	3.90	0.23	36.63	4.42	129.20	0.00	1.61	1.61	127.59	9.53	0.12	0.44	0.31
24	84.01	3.90	0.23	36.63	4.53	129.30	0.00	1.61	1.61	127.69	8.52	0.11	0.34	0.24
25	84.01	3.89	0.23	36.63	4.67	129.44	0.00	1.61	1.61	127.83	7.61	0.09	0.27	0.18
26	84.01	3.94	0.23	36.63	4.80	129.62	0.00	1.61	1.61	128.00	6.81	0.08	0.21	0.14
27	84.01	4.00	0.23	36.63	4.94	129.82	0.00	1.61	1.61	128.20	6.09	0.08	0.16	0.11
28	84.01	4.07	0.23	36.63	5.08	130.02	0.00	1.61	1.61	128.41	5.44	0.07	0.13	0.08
29	84.01	4.63	0.23	36.63	5.22	130.73	0.00	1.61	1.61	129.11	4.89	0.06	0.10	0.06
30	84.01	4.20	0.23	36.63	5.37	130.44	0.00	1.61	1.61	128.83	4.35	0.05	0.08	0.05
TOTAL	1701.09	92.17	6.22	812.72	103.08	2715.3	172.21	43.4	215.65	2499.63	425.09	138.06	2.09	-6.89

NET PRESENT WORTH = Rs287.027 million

B/C RATIO = 3.08 : 1

IRR = 28.47 %

657

TABLE 9.31

ECONOMIC ANALYSIS OF CANAL ROADS IN PAKISTAN
BENEFITS, COSTS AND MEASURES OF PROJECT DESIRABILITY
(Rs.Million)

YEARS	BENEFITS: Increase in Agri. Prod.	Savings in off-Road Hauling Exp.	Canal O&M Savings	Vehicle Operating Cost (VOC) Savings	Time Savings	Total Benefits	COSTS: Capital Cost	O & M Cost	Total Cost	CASH FLOW	PRESENT WORTH: Benefits @ 12%	Costs @ 12%	CASH FLOW 18%	CASH FLOW 20%
0	0.00	0.00	0.00	0.00	0.00	0.00	0.00	0.00	0.00	0.00	0.00	0.00	0.00	0.00
1	0.00	0.00	0.00	0.00	0.00	0.00	492.15	0.00	492.15	-492.15	0.00	439.42	-417.08	-410.13
2	4.17	3.71	0.40	16.83	2.88	27.99	436.66	3.31	439.96	-411.97	22.32	350.74	-295.87	-286.09
3	19.46	9.62	0.94	41.08	7.00	78.10	341.14	7.72	348.86	-270.76	55.59	248.31	-164.79	-156.69
4	49.99	15.43	1.61	73.68	12.36	153.06	338.38	13.31	351.69	-198.63	97.27	223.51	-102.45	-95.79
5	94.44	22.58	2.29	109.21	18.05	246.57	229.06	18.74	247.79	-1.22	139.91	140.60	-0.53	-0.49
6	138.85	27.42	2.69	134.47	21.90	325.33	0.00	22.04	22.04	303.28	164.82	11.17	112.35	101.57
7	166.59	27.99	2.69	140.76	22.57	360.60	0.00	22.04	22.04	338.55	163.12	9.97	106.28	94.48
8	193.35	28.56	2.69	147.37	23.24	395.21	0.00	22.04	22.04	373.17	159.62	8.90	99.28	86.79
9	222.06	29.12	2.69	154.33	23.95	432.16	0.00	22.04	22.04	410.11	155.84	7.95	92.46	79.48
10	249.80	29.69	2.69	161.66	24.69	468.52	0.00	22.04	22.04	446.48	150.85	7.10	85.31	72.11
11	271.43	30.16	2.69	169.36	25.44	499.08	0.00	22.04	22.04	477.04	143.47	6.34	77.24	64.20
12	293.11	30.63	2.69	177.47	26.20	530.11	0.00	22.04	22.04	508.06	136.07	5.66	69.72	56.98
13	314.76	31.11	2.69	186.02	27.01	561.58	0.00	22.04	22.04	539.54	128.70	5.05	62.74	50.43
14	336.38	31.57	2.69	195.02	27.86	593.51	0.00	22.04	22.04	571.47	121.44	4.51	56.32	44.51
15	357.97	32.03	2.69	204.49	28.70	625.88	0.00	22.04	22.04	603.84	114.35	4.03	50.43	39.19
16	379.54	32.49	2.69	214.48	29.56	658.75	0.00	22.04	22.04	636.71	107.46	3.60	45.06	34.44
17	401.12	32.94	2.69	225.01	30.48	692.23	0.00	22.04	22.04	670.19	100.82	3.21	40.20	30.21
18	422.66	33.39	2.69	236.10	31.39	726.23	0.00	22.04	22.04	704.19	94.44	2.87	35.79	26.45
19	444.20	33.84	2.69	247.81	31.89	760.42	0.00	22.04	22.04	738.38	88.29	2.56	31.81	23.11
20	465.71	34.28	2.69	260.15	33.34	796.17	0.00	22.04	22.04	774.12	82.54	2.29	28.26	20.19
21	465.71	34.07	2.69	260.15	34.37	796.99	0.00	22.04	22.04	774.94	73.77	2.04	23.97	16.84
22	465.71	33.85	2.69	260.15	35.45	797.85	0.00	22.04	22.04	775.81	65.94	1.82	20.34	14.05
23	465.71	33.36	2.69	260.15	36.51	798.42	0.00	22.04	22.04	776.38	58.91	1.63	17.25	11.72
24	465.71	33.45	2.69	260.15	37.61	799.61	0.00	22.04	22.04	777.57	52.68	1.45	14.64	9.78
25	465.71	33.33	2.69	260.15	38.78	800.66	0.00	22.04	22.04	778.62	47.10	1.30	12.42	8.16
26	465.71	33.39	2.69	260.15	39.98	801.92	0.00	22.04	22.04	779.88	42.12	1.16	10.55	6.81
27	465.71	33.46	2.69	260.15	41.20	803.21	0.00	22.04	22.04	781.16	37.67	1.03	8.95	5.69
28	465.71	33.53	2.69	260.15	42.47	804.55	0.00	22.04	22.04	782.51	33.69	0.92	7.60	4.75
29	465.71	34.10	2.69	260.15	43.76	806.41	0.00	22.04	22.04	784.37	30.15	0.82	6.46	3.97
30	465.71	33.75	2.69	260.15	45.12	807.42	0.00	22.04	22.04	785.37	26.95	0.74	5.48	3.31
TOTAL	9482.69	852.84	72.44	5696.82	843.76	16948.6	1837.38	594.2	2431.55	14517.0	2695.87	1500.7	140.18	-39.96

NET PRESENT WORTH = Rs. 1195.19 million

B/C RATIO = 1.80 : 1

IRR = 19.56 %

658

TABLE 9.32

SENSITIVITY ANALYSIS OF AGGREGATED PROJECT
ALT I*

(Rs.Million)

YEARS	BENEFITS: Increase in Agri. Prod.	Savings in off-Road Hauling Exp.	Canal O&M Savings	Vehicle Operating Cost(VOC) Savings	Time Savings	Total Benefits	COSTS: Capital Cost	O & M Cost	Total Cost	CASH FLOW	PRESENT WORTH: Benefits @ 12%	Costs @ 12%	CASH FLOW 16%	CASH FLOW 18%
0	0.00	0.00	0.00	0.00	0.00	0.00	0.00	0.00	0.00	0.00	0.00	0.00	0.00	0.00
1	0.00	0.00	0.00	0.00	0.00	0.00	492.15	0.00	492.15	-492.15	0.00	439.42	-424.27	-417.08
2	3.75	3.34	0.36	15.15	2.59	25.20	436.66	3.31	439.96	-414.77	20.09	350.74	-308.24	-297.88
3	17.51	8.65	0.85	36.97	6.30	70.29	341.14	7.72	348.86	-278.57	50.03	248.31	-178.47	-169.54
4	44.99	13.88	1.45	66.31	11.12	137.76	338.38	13.31	351.69	-213.93	87.55	223.51	-118.15	-110.34
5	85.00	20.32	2.06	98.29	16.25	221.91	229.06	18.74	247.79	-25.88	125.92	140.60	-12.32	-11.31
6	124.97	24.68	2.42	121.02	19.71	292.79	0.00	22.04	22.04	270.75	148.34	11.17	111.13	100.29
7	149.93	25.19	2.42	126.68	20.31	324.54	0.00	22.04	22.04	302.49	146.80	9.97	107.03	94.96
8	174.02	25.70	2.42	132.64	20.92	355.69	0.00	22.04	22.04	333.64	145.66	8.90	101.77	88.76
9	199.85	26.21	2.42	138.90	21.56	388.94	0.00	22.04	22.04	366.90	140.26	7.95	96.48	82.72
10	224.82	26.72	2.42	145.49	22.22	421.67	0.00	22.04	22.04	399.63	135.77	7.10	90.59	76.35
11	244.29	27.15	2.42	152.43	22.90	449.18	0.00	22.04	22.04	427.13	129.13	6.34	83.47	69.16
12	263.80	27.57	2.42	159.73	23.58	477.10	0.00	22.04	22.04	455.05	122.46	5.66	76.66	62.44
13	283.28	27.99	2.42	167.42	24.31	505.42	0.00	22.04	22.04	483.38	115.83	5.05	70.20	56.21
14	302.74	28.41	2.42	175.51	25.07	534.16	0.00	22.04	22.04	512.12	109.30	4.51	64.11	50.47
15	322.17	28.83	2.42	184.04	25.83	563.29	0.00	22.04	22.04	541.25	102.91	4.03	58.42	45.20
16	341.59	29.24	2.42	193.03	26.60	592.88	0.00	22.04	22.04	570.83	96.71	3.60	53.11	40.40
17	361.01	29.65	2.42	202.50	27.43	623.01	0.00	22.04	22.04	600.97	90.74	3.21	48.20	36.05
18	380.39	30.05	2.42	212.49	28.25	653.61	0.00	22.04	22.04	631.56	84.99	2.87	43.67	32.10
19	399.78	30.45	2.42	223.03	28.70	684.38	0.00	22.04	22.04	662.34	79.46	2.56	39.48	28.53
20	419.14	30.85	2.42	234.14	30.01	716.55	0.00	22.04	22.04	694.51	74.28	2.29	35.69	25.35
21	419.14	30.66	2.42	234.14	30.93	717.29	0.00	22.04	22.04	695.24	66.39	2.04	30.80	21.51
22	419.14	30.47	2.42	234.14	31.91	718.07	0.00	22.04	22.04	696.02	59.34	1.82	26.58	18.25
23	419.14	30.02	2.42	234.14	32.86	718.58	0.00	22.04	22.04	696.53	53.02	1.63	22.93	15.48
24	419.14	30.11	2.42	234.14	33.85	719.65	0.00	22.04	22.04	697.61	47.41	1.45	19.80	13.14
25	419.14	30.00	2.42	234.14	34.90	720.60	0.00	22.04	22.04	698.55	42.39	1.30	17.09	11.15
26	419.14	30.05	2.42	234.14	35.98	721.73	0.00	22.04	22.04	699.68	37.91	1.16	14.76	9.46
27	419.14	30.11	2.42	234.14	37.08	722.89	0.00	22.04	22.04	700.84	33.90	1.03	12.74	8.03
28	419.14	30.18	2.42	234.14	38.22	724.10	0.00	22.04	22.04	702.05	30.32	0.92	11.00	6.82
29	419.14	30.69	2.42	234.14	39.38	725.77	0.00	22.04	22.04	703.73	27.13	0.82	9.51	5.79
30	419.14	30.37	2.42	234.14	40.61	726.68	0.00	22.04	22.04	704.63	24.25	0.74	8.21	4.91
TOTAL	8534.42	767.56	65.20	5127.14	759.38	15253.7	1837.38	594.2	2431.55	12822.1	2426.28	1500.7	211.97	-2.61

* Benefits decreased by 10%

NET PRESENT WORTH = Rs. 925.604 million

B/C RATIO = 1.62 : 1

IRR = 17.98 %

159

TABLE 9.33

SENSITIVITY ANALYSIS OF AGGREGATED PROJECT
ALT II*

(Rs.Million)

YEARS	BENEFITS: Increase in Agri. Prod.	Savings in off-Road Hauling Exp.	Canal O&M Savings	Vehicle Operating Cost (VOC) Savings	Time Savings	Total Benefits	COSTS: Capital Cost	O & M Cost	Total Cost	CASH FLOW	PRESENT WORTH: Benefits @ 12%	Costs @ 12%	CASH FLOW @ 18%	CASH FLOW @ 20%
0	0.00	0.00	0.00	0.00	0.00	0.00	0.00	0.00	0.00	0.00	0.00	0.00	0.00	0.00
1	0.00	0.00	0.00	0.00	0.00	0.00	541.37	0.00	541.37	-541.37	0.00	483.36	-458.78	-451.14
2	4.17	3.71	0.40	16.83	2.88	27.99	480.32	3.31	483.63	-455.63	22.32	385.55	-327.23	-316.41
3	19.46	9.62	0.94	41.08	7.00	78.10	375.25	7.72	382.97	-304.87	55.59	272.59	-185.55	-176.43
4	49.99	15.43	1.61	73.68	12.36	153.06	372.22	13.31	385.53	-232.47	97.27	245.01	-119.90	-112.11
5	94.44	22.58	2.29	109.21	18.05	246.57	251.96	18.74	270.70	-24.13	139.91	153.60	-10.55	-9.70
6	138.85	27.42	2.69	134.47	21.90	325.33	0.00	22.04	22.04	303.28	164.82	11.17	112.35	101.57
7	166.59	27.99	2.69	140.76	22.57	360.60	0.00	22.04	22.04	338.55	163.12	9.97	106.28	94.48
8	193.35	28.56	2.69	147.37	23.24	395.21	0.00	22.04	22.04	373.17	159.62	8.90	99.28	86.79
9	222.06	29.12	2.69	154.33	23.95	432.16	0.00	22.04	22.04	410.11	155.84	7.95	92.46	79.48
10	249.80	29.69	2.69	161.66	24.69	468.52	0.00	22.04	22.04	446.48	150.85	7.10	85.31	72.11
11	271.43	30.16	2.69	169.36	25.44	499.08	0.00	22.04	22.04	477.04	143.47	6.34	77.24	64.20
12	293.11	30.63	2.69	177.47	26.20	530.11	0.00	22.04	22.04	508.06	136.07	5.66	69.72	56.98
13	314.76	31.11	2.69	186.02	27.01	561.58	0.00	22.04	22.04	539.54	128.70	5.05	62.74	50.43
14	336.38	31.57	2.69	195.02	27.86	593.51	0.00	22.04	22.04	571.47	121.44	4.51	56.32	44.51
15	357.97	32.03	2.69	204.49	28.70	625.88	0.00	22.04	22.04	603.84	114.35	4.03	50.43	39.19
16	379.54	32.49	2.69	214.48	29.56	658.75	0.00	22.04	22.04	636.71	107.46	3.60	45.06	34.44
17	401.12	32.94	2.69	225.01	30.48	692.23	0.00	22.04	22.04	670.19	100.82	3.21	40.20	30.21
18	422.66	33.39	2.69	236.10	31.39	726.23	0.00	22.04	22.04	704.19	94.44	2.87	35.79	26.45
19	444.20	33.84	2.69	247.81	31.89	760.42	0.00	22.04	22.04	738.38	88.29	2.56	31.81	23.11
20	465.71	34.28	2.69	260.15	33.34	796.17	0.00	22.04	22.04	774.12	82.54	2.29	28.26	20.19
21	465.71	34.07	2.69	260.15	34.37	796.99	0.00	22.04	22.04	774.94	73.77	2.04	23.97	16.84
22	465.71	33.85	2.69	260.15	35.45	797.85	0.00	22.04	22.04	775.81	65.94	1.82	20.34	14.05
23	465.71	33.36	2.69	260.15	36.51	798.42	0.00	22.04	22.04	776.38	58.91	1.63	17.25	11.72
24	465.71	33.45	2.69	260.15	37.61	799.61	0.00	22.04	22.04	777.57	52.68	1.45	14.64	9.78
25	465.71	33.33	2.69	260.15	38.78	800.66	0.00	22.04	22.04	778.62	47.10	1.30	12.42	8.16
26	465.71	33.39	2.69	260.15	39.98	801.92	0.00	22.04	22.04	779.88	42.12	1.16	10.55	6.81
27	465.71	33.46	2.69	260.15	41.20	803.21	0.00	22.04	22.04	781.16	37.67	1.03	8.95	5.69
28	465.71	33.53	2.69	260.15	42.47	804.55	0.00	22.04	22.04	782.51	33.69	0.92	7.60	4.75
29	465.71	34.10	2.69	260.15	43.76	806.41	0.00	22.04	22.04	784.37	30.15	0.82	6.46	3.97
30	465.71	33.75	2.69	260.15	45.12	807.42	0.00	22.04	22.04	785.37	26.95	0.74	5.46	3.31
TOTAL	9482.69	852.84	72.44	5696.82	843.76	16948.6	2021.12	594.2	2615.29	14333.3	2695.87	1638.2	18.88	-156.56

* Costs increased by 10%

NET PRESENT WORTH = Rs. 1057.65 million

B/C RATIO = 1.65 : 1

IRR = 18.22 %

660

TABLE 9.33A

SENSITIVITY ANALYSIS OF AGGREGATED PROJECT
ALT IIA *

(Rs.Million)

YEARS	BENEFITS: Increase in Agri. Prod.	Savings in off-Road Hauling Exp.	Canal O&M Savings	Vehicle Operating Cost (VOC) Savings	Time Savings	Total Benefits	COSTS: Capital Cost	O & M Cost	Total Cost	CASH FLOW	PRESENT WORTH: Benefits @ 12%	Costs @ 12%	CASH FLOW 18%	CASH FLOW 20%
0	0.00	0.00	0.00	0.00	0.00	0.00	0.00	0.00	0.00	0.00	0.00	0.00	0.00	0.00
1	0.00	0.00	0.00	0.00	0.00	0.00	541.37	0.00	541.37	-541.37	0.00	483.36	-458.78	-451.14
2	4.17	3.71	0.40	16.83	2.88	27.99	480.32	3.64	483.96	-455.96	22.32	385.81	-327.47	-316.64
3	19.46	9.62	0.94	41.08	7.00	78.10	375.25	8.49	383.74	-305.64	55.59	273.14	-186.02	-176.88
4	49.99	15.43	1.61	73.68	12.36	153.06	372.22	14.64	386.86	-233.80	97.27	245.86	-120.59	-112.75
5	94.44	22.58	2.29	109.21	18.05	246.57	251.96	20.61	272.57	-26.00	139.91	154.67	-11.37	-10.45
6	138.85	27.42	2.69	134.47	21.90	325.33	0.00	24.25	24.25	301.08	164.82	12.28	111.53	100.83
7	166.59	27.99	2.69	140.76	22.57	360.60	0.00	24.25	24.25	336.35	163.12	10.97	105.59	93.87
8	193.35	28.56	2.69	147.37	23.24	395.21	0.00	24.25	24.25	370.96	159.62	9.79	98.69	86.27
9	222.06	29.12	2.69	154.33	23.95	432.16	0.00	24.25	24.25	407.91	155.84	8.74	91.97	79.06
10	249.80	29.69	2.69	161.66	24.69	468.52	0.00	24.25	24.25	444.27	150.85	7.81	84.88	71.75
11	271.43	30.16	2.69	169.36	25.44	499.08	0.00	24.25	24.25	474.84	143.47	6.97	76.88	63.91
12	293.11	30.63	2.69	177.47	26.20	530.11	0.00	24.25	24.25	505.86	136.07	6.22	69.41	56.74
13	314.76	31.11	2.69	186.02	27.01	561.58	0.00	24.25	24.25	537.33	128.70	5.56	62.49	50.22
14	336.38	31.57	2.69	195.02	27.86	593.51	0.00	24.25	24.25	569.26	121.44	4.96	56.10	44.34
15	357.97	32.03	2.69	204.49	28.70	625.88	0.00	24.25	24.25	601.63	114.35	4.43	50.25	39.05
16	379.54	32.49	2.69	214.48	29.56	658.75	0.00	24.25	24.25	634.51	107.46	3.96	44.91	34.32
17	401.12	32.94	2.69	225.01	30.48	692.23	0.00	24.25	24.25	667.99	100.82	3.53	40.07	30.11
18	422.66	33.39	2.69	236.10	31.39	726.23	0.00	24.25	24.25	701.98	94.44	3.15	35.68	26.37
19	444.20	33.84	2.69	247.81	31.89	760.42	0.00	24.25	24.25	736.17	88.29	2.82	31.71	23.04
20	465.71	34.28	2.69	260.15	33.34	796.17	0.00	24.25	24.25	771.92	82.54	2.51	28.18	20.13
21	465.71	34.07	2.69	260.15	34.37	796.99	0.00	24.25	24.25	772.74	73.77	2.24	23.91	16.80
22	465.71	33.85	2.69	260.15	35.45	797.85	0.00	24.25	24.25	773.60	65.94	2.00	20.28	14.01
23	465.71	33.36	2.69	260.15	36.51	798.42	0.00	24.25	24.25	774.17	58.91	1.79	17.20	11.69
24	465.71	33.45	2.69	260.15	37.61	799.61	0.00	24.25	24.25	775.36	52.68	1.60	14.60	9.75
25	465.71	33.33	2.69	260.15	38.78	800.66	0.00	24.25	24.25	776.42	47.10	1.43	12.39	8.14
26	465.71	33.39	2.69	260.15	39.98	801.92	0.00	24.25	24.25	777.67	42.12	1.27	10.52	6.79
27	465.71	33.46	2.69	260.15	41.20	803.21	0.00	24.25	24.25	778.96	37.67	1.14	8.93	5.67
28	465.71	33.53	2.69	260.15	42.47	804.55	0.00	24.25	24.25	780.30	33.69	1.02	7.58	4.73
29	465.71	34.10	2.69	260.15	43.76	806.41	0.00	24.25	24.25	782.17	30.15	0.91	6.44	3.95
30	465.71	33.75	2.69	260.15	45.12	807.42	0.00	24.25	24.25	783.17	26.95	0.81	5.46	3.30
TOTAL	9482.69	852.84	72.44	5696.82	843.76	16948.6	2021.12	653.6	2674.71	14273.8	2695.87	1650.7	11.40	-163.01

* Capital and O&M Costs increased by 10%

NET PRESENT WORTH = Rs. 1045.12 million

B/C RATIO = 1.63 : 1

IRR = 18.13 %

161

TABLE 9.34

SENSITIVITY ANALYSIS OF AGGERGATED PROJECT
ALT III *

(Rs.Million)

YEARS	BENEFITS: Increase in Agri. Prod.	Savings in off-Road Hauling Exp.	Canal O&M Savings	Vehicle Operating Cost (VOC) Savings	Time Savings	Total Benefits	COSTS: Capital Cost	O & M Cost	Total Cost	CASH FLOW	PRESENT WORTH: Benefits @ 12%	Costs @ 12%	CASH FLOW 16%	CASH FLOW 18%
0	0.00	0.00	0.00	0.00	0.00	0.00	0.00	0.00	0.00	0.00	0.00	0.00	0.00	0.00
1	0.00	0.00	0.00	0.00	0.00	0.00	541.37	0.00	541.37	-541.37	0.00	483.36	-466.69	-458.78
2	3.75	3.34	0.36	15.15	2.59	25.20	480.32	3.31	483.63	-458.43	20.09	385.55	-340.69	-329.24
3	17.51	8.65	0.85	36.97	6.30	70.29	375.25	7.72	382.97	-312.68	50.03	272.59	-200.32	-190.31
4	44.99	13.88	1.45	66.31	11.12	137.76	372.22	13.31	385.53	-247.77	87.55	245.01	-136.84	-127.80
5	85.00	20.32	2.06	98.29	16.25	221.91	251.96	18.74	270.70	-48.79	125.92	153.60	-23.23	-21.32
6	124.97	24.68	2.42	121.02	19.71	292.79	0.00	22.04	22.04	270.75	148.34	11.17	111.13	100.29
7	149.93	25.19	2.42	126.68	20.31	324.54	0.00	22.04	22.04	302.49	146.80	9.97	107.03	94.96
8	174.02	25.70	2.42	132.64	20.92	355.69	0.00	22.04	22.04	333.64	143.66	8.90	101.77	88.76
9	199.85	26.21	2.42	138.90	21.56	388.94	0.00	22.04	22.04	366.90	140.26	7.95	96.48	82.72
10	224.82	26.72	2.42	145.49	22.22	421.67	0.00	22.04	22.04	399.63	136.77	7.10	90.59	76.35
11	244.29	27.15	2.42	152.43	22.90	449.18	0.00	22.04	22.04	427.13	129.13	6.34	83.47	69.16
12	263.80	27.57	2.42	159.73	23.58	477.10	0.00	22.04	22.04	455.05	122.46	5.66	76.66	62.44
13	283.28	27.99	2.42	167.42	24.31	505.42	0.00	22.04	22.04	483.38	115.83	5.05	70.20	56.21
14	302.74	28.41	2.42	175.51	25.07	534.16	0.00	22.04	22.04	512.12	109.30	4.51	64.11	50.47
15	322.17	28.83	2.42	184.04	25.83	563.29	0.00	22.04	22.04	541.25	102.91	4.03	58.42	45.20
16	341.59	29.24	2.42	193.03	26.60	592.88	0.00	22.04	22.04	570.83	96.71	3.60	53.11	40.40
17	361.01	29.65	2.42	202.50	27.43	623.01	0.00	22.04	22.04	600.97	90.74	3.21	48.20	36.05
18	380.39	30.05	2.42	212.49	28.25	653.61	0.00	22.04	22.04	631.56	84.99	2.87	43.67	32.10
19	399.78	30.45	2.42	223.03	28.70	684.38	0.00	22.04	22.04	662.34	79.46	2.56	39.48	28.53
20	419.14	30.85	2.42	234.14	30.01	716.55	0.00	22.04	22.04	694.51	74.28	2.29	35.69	25.35
21	419.14	30.66	2.42	234.14	30.93	717.29	0.00	22.04	22.04	695.24	66.39	2.04	30.80	21.51
22	419.14	30.47	2.42	234.14	31.91	718.07	0.00	22.04	22.04	696.02	59.34	1.82	26.58	18.25
23	419.14	30.02	2.42	234.14	32.86	718.58	0.00	22.04	22.04	696.53	53.02	1.63	22.93	15.48
24	419.14	30.11	2.42	234.14	33.85	719.65	0.00	22.04	22.04	697.61	47.41	1.45	19.80	13.14
25	419.14	30.00	2.42	234.14	34.90	720.60	0.00	22.04	22.04	698.55	42.39	1.30	17.09	11.15
26	419.14	30.05	2.42	234.14	35.98	721.73	0.00	22.04	22.04	699.68	37.91	1.16	14.76	9.46
27	419.14	30.11	2.42	234.14	37.08	722.89	0.00	22.04	22.04	700.84	33.90	1.03	12.74	8.03
28	419.14	30.18	2.42	234.14	38.22	724.10	0.00	22.04	22.04	702.05	30.32	0.92	11.00	6.82
29	419.14	30.69	2.42	234.14	39.38	725.77	0.00	22.04	22.04	703.73	27.13	0.82	9.51	5.79
30	419.14	30.37	2.42	234.14	40.61	726.68	0.00	22.04	22.04	704.63	24.25	0.74	8.21	4.91
TOTAL	8534.42	767.56	65.20	5127.14	759.38	15253.7	2021.12	594.2	2615.29	12638.4	2426.28	1638.2	85.64	-123.91

* Benefits decreased and Costs increased by 10%

NET PRESENT WORTH = Rs. 788.068 million

B/C RATIO = 1.48 : 1

IRR = 16.82 %

662

TABLE 9.35

SENSITIVITY ANALYSIS OF AGGREGATED PROJECT
ALT IV *

(Rs.Million)

YEARS	BENEFITS: Increase in Agri. Prod.	Savings in off-Road Hauling Exp.	Canal O&M Savings	Vehicle Operating Cost (VOC) Savings	Time Savings	Total Benefits	COSTS: Capital Cost	O & M Cost	Total Cost	CASH FLOW	PRESENT WORTH: Benefits @ 12%	Costs @ 12%	CASH FLOW 18%	CASH FLOW 20%
0	0.00	0.00	0.00	0.00	0.00	0.00	0.00	0.00	0.00	0.00	0.00	0.00	0.00	0.00
1	0.00	0.00	0.00	0.00	0.00	0.00	492.15	0.00	492.15	-492.15	0.00	439.42	-417.08	-410.13
2	4.17	3.71	0.40	16.83	2.88	27.99	436.66	3.31	439.96	-411.97	22.32	350.74	-295.87	-286.09
3	19.46	9.62	0.94	41.08	7.00	78.10	341.14	7.72	348.86	-270.76	55.59	248.31	-164.79	-156.69
4	49.99	15.43	1.61	73.68	12.36	153.06	338.38	13.31	351.69	-198.63	97.27	223.51	-102.45	-95.79
5	94.44	22.58	2.29	109.21	18.05	246.57	229.06	18.74	247.79	-1.22	139.91	140.60	-0.53	-0.49
6	138.85	27.42	2.69	134.47	21.90	325.33	-64.85	22.04	-42.81	368.13	164.82	-21.69	136.37	123.29
7	166.59	27.99	2.69	140.76	22.57	360.60	0.00	22.04	22.04	338.55	163.12	9.97	106.28	94.48
8	193.35	28.56	2.69	147.37	23.24	395.21	0.00	22.04	22.04	373.17	159.62	8.90	99.28	86.79
9	222.06	29.12	2.69	154.33	23.95	432.16	0.00	22.04	22.04	410.11	155.84	7.95	92.46	79.48
10	249.80	29.69	2.69	161.66	24.69	468.52	0.00	22.04	22.04	446.48	150.85	7.10	85.31	72.11
11	271.43	30.16	2.69	169.36	25.44	499.08	0.00	22.04	22.04	477.04	143.47	6.34	77.24	64.20
12	293.11	30.63	2.69	177.47	26.20	530.11	0.00	22.04	22.04	508.06	136.07	5.66	69.72	56.98
13	314.76	31.11	2.69	186.02	27.01	561.58	0.00	22.04	22.04	539.54	129.70	5.05	62.74	50.43
14	336.38	31.57	2.69	195.02	27.86	593.51	0.00	22.04	22.04	571.47	121.44	4.51	56.32	44.51
15	357.97	32.03	2.69	204.49	28.70	625.88	0.00	22.04	22.04	603.84	114.35	4.03	50.43	39.19
16	379.54	32.49	2.69	214.48	29.56	658.75	0.00	22.04	22.04	636.71	107.46	3.60	45.06	34.44
17	401.12	32.94	2.69	225.01	30.48	692.23	0.00	22.04	22.04	670.19	100.82	3.21	40.20	30.21
18	422.66	33.39	2.69	236.10	31.39	726.23	0.00	22.04	22.04	704.19	94.44	2.87	35.79	26.45
19	444.20	33.84	2.69	247.81	31.89	760.42	0.00	22.04	22.04	738.38	88.29	2.56	31.81	23.11
20	465.71	34.28	2.69	260.15	33.34	796.17	0.00	22.04	22.04	774.12	82.54	2.29	28.26	20.19
21	465.71	34.07	2.69	260.15	34.37	796.99	0.00	22.04	22.04	774.94	73.77	2.04	23.97	16.84
22	465.71	33.85	2.69	260.15	35.45	797.85	0.00	22.04	22.04	775.81	65.94	1.82	20.34	14.05
23	465.71	33.36	2.69	260.15	36.51	798.42	0.00	22.04	22.04	776.38	58.91	1.63	17.25	11.72
24	465.71	33.45	2.69	260.15	37.61	799.61	0.00	22.04	22.04	777.57	52.68	1.45	14.64	9.78
25	465.71	33.33	2.69	260.15	38.78	800.66	0.00	22.04	22.04	778.62	47.10	1.30	12.42	8.16
26	465.71	33.39	2.69	260.15	39.98	801.92	0.00	22.04	22.04	779.88	42.12	1.16	10.55	6.81
27	465.71	33.46	2.69	260.15	41.20	803.21	0.00	22.04	22.04	781.16	37.67	1.03	8.95	5.69
28	465.71	33.53	2.69	260.15	42.47	804.55	0.00	22.04	22.04	782.51	33.69	0.92	7.60	4.75
29	465.71	34.10	2.69	260.15	43.76	806.41	0.00	22.04	22.04	784.37	30.15	0.82	6.46	3.97
30	465.71	33.75	2.69	260.15	45.12	807.42	0.00	22.04	22.04	785.37	26.95	0.74	5.48	3.31
TOTAL	9482.69	852.84	72.44	5696.82	843.76	16948.6	1772.53	594.2	2366.70	14581.9	2695.87	1467.8	164.20	-18.24

* With salvage value of equipment.

NET PRESENT WORTH = Rs. 1228.04 million

B/C RATIO = 1.84 : 1

IRR = 19.80 %

663

TABLE 9.36

SENSITIVITY ANALYSIS OF AGGREGATED PROJECT
ALT V *

(Rs.Million)

YEARS	BENEFITS: Increase in Agri. Prod.	Savings in off-Road Hauling Exp.	Canal D&M Savings	Vehicle Operating Cost(VOC) Savings	Time Savings	Total Benefits	COSTS: Capital Cost	O & M Cost	Total Cost	CASH FLOW	PRESENT WORTH: Benefits @ 12%	Costs @ 12%	CASH FLOW 18%	CASH FLOW 20%
0	0.00	0.00	0.00	0.00	0.00	0.00	0.00	0.00	0.00	0.00	0.00	0.00	0.00	0.00
1	0.00	0.00	0.00	0.00	0.00	0.00	492.15	0.00	492.15	-492.15	0.00	439.42	-417.08	-410.13
2	4.17	3.71	0.40	16.83	2.88	27.99	436.66	3.31	439.96	-411.97	22.32	350.74	-295.87	-286.09
3	19.46	9.62	0.94	41.08	7.00	78.10	341.14	7.72	348.86	-270.76	55.59	248.31	-164.79	-156.69
4	49.99	15.43	1.61	73.68	12.36	153.06	338.38	13.31	351.69	-198.63	97.27	223.51	-102.45	-95.79
5	94.44	22.58	2.29	109.21	18.05	246.57	229.06	18.74	247.79	-1.22	139.91	140.60	-0.53	-0.49
6	138.85	27.42	2.69	134.47	21.90	325.33	-64.85	22.04	-42.81	368.13	164.82	-21.69	136.37	123.29
7	166.59	27.99	2.69	140.76	22.57	360.60	0.00	22.04	22.04	338.55	163.12	9.97	106.28	94.48
8	193.35	28.56	2.69	147.37	23.24	395.21	0.00	22.04	22.04	373.17	159.62	8.90	99.28	86.79
9	222.06	29.12	2.69	154.33	23.95	432.16	0.00	22.04	22.04	410.11	155.84	7.95	92.46	79.48
10	249.80	29.69	2.69	161.66	24.69	468.52	0.00	22.04	22.04	446.48	150.85	7.10	85.31	72.11
11	271.43	30.16	2.69	169.36	25.44	499.08	0.00	22.04	22.04	477.04	143.47	6.34	77.24	64.20
12	293.11	30.63	2.69	177.47	26.20	530.11	0.00	22.04	22.04	508.06	136.07	5.66	69.72	56.98
13	314.76	31.11	2.69	186.02	27.01	561.58	0.00	22.04	22.04	539.54	128.70	5.05	62.74	50.43
14	336.38	31.57	2.69	195.02	27.86	593.51	0.00	22.04	22.04	571.47	121.44	4.51	56.32	44.51
15	357.97	32.03	2.69	204.49	28.70	625.88	0.00	22.04	22.04	603.84	114.35	4.03	50.43	39.19
16	379.54	32.49	2.69	214.48	29.56	658.75	0.00	22.04	22.04	636.71	107.46	3.60	45.06	34.44
17	401.12	32.94	2.69	225.01	30.48	692.23	0.00	22.04	22.04	670.19	100.82	3.21	40.20	30.21
18	422.66	33.39	2.69	236.10	31.39	726.23	0.00	22.04	22.04	704.19	94.44	2.87	35.79	26.45
19	444.20	33.84	2.69	247.81	31.89	760.42	0.00	22.04	22.04	738.38	88.29	2.56	31.81	23.11
20	465.71	34.28	2.69	260.15	33.34	796.17	0.00	22.04	22.04	774.12	82.54	2.29	28.26	20.19
TOTAL	4825.59	516.55	45.56	3095.30	448.51	8931.51	1772.53	373.73	2146.26	6785.25	2226.91	1454.9	36.54	-103.32

* With salvage value of equipment; life of project 20 years.

NET PRESENT WORTH = Rs.771.997 million

B/C RATIO = 1.53 : 1

IRR = 18.52 %

664

TABLE 9.37

SENSITIVITY ANALYSIS OF AGGREGATED PROJECT
ALT VI *

(Rs.Million)

YEARS	BENEFITS: Increase in Agri. Prod.	BENEFITS: Savings in off-Road Hauling Exp.	BENEFITS: Canal O&M Savings	BENEFITS: Vehicle Operating Cost (VOC) Savings	BENEFITS: Time Savings	BENEFITS: Total Benefits	COSTS: Capital Cost	COSTS: O & M Cost	COSTS: Total Cost	CASH FLOW	PRESENT WORTH: Benefits @ 12%	PRESENT WORTH: Costs @ 12%	PRESENT WORTH: CASH FLOW 14%	PRESENT WORTH: CASH FLOW 16%
0	0.00	0.00	0.00	0.00	0.00	0.00	0.00	0.00	0.00	0.00	0.00	0.00	0.00	0.00
1	0.00	0.00	0.00	0.00	0.00	0.00	492.15	0.00	492.15	-492.15	0.00	439.42	-431.71	-424.27
2	4.17	3.71	0.40	16.83	2.88	27.99	436.66	3.31	439.96	-411.97	22.32	350.74	-317.00	-306.16
3	19.46	9.62	0.94	41.08	7.00	78.10	341.14	7.72	348.86	-270.76	55.59	248.31	-182.75	-173.46
4	49.99	15.43	1.61	73.68	12.36	153.06	338.38	13.31	351.69	-198.63	97.27	223.51	-117.60	-109.70
5	94.44	22.58	2.29	109.21	18.05	246.57	229.06	18.74	247.79	-1.22	139.91	140.60	-0.64	-0.58
6	138.85	27.42	2.69	134.47	21.90	325.33	-64.85	22.04	-42.81	368.13	164.82	-21.69	167.72	151.10
7	166.59	27.99	2.69	140.76	22.57	360.60	0.00	22.04	22.04	338.55	163.12	9.97	135.30	119.79
8	193.35	28.56	2.69	147.37	23.24	395.21	0.00	22.04	22.04	373.17	159.62	8.90	130.82	113.82
9	222.06	29.12	2.69	154.33	23.95	432.16	0.00	22.04	22.04	410.11	155.84	7.95	126.11	107.84
10	249.80	29.69	2.69	161.66	24.69	468.52	0.00	22.04	22.04	446.48	150.85	7.10	120.43	101.21
11	271.43	30.16	2.69	169.36	25.44	499.08	0.00	22.04	22.04	477.04	143.47	6.34	112.88	93.22
12	293.11	30.63	2.69	177.47	26.20	530.11	0.00	22.04	22.04	508.06	136.07	5.66	105.45	85.59
13	314.76	31.11	2.69	186.02	27.01	561.58	0.00	22.04	22.04	539.54	128.70	5.05	98.23	78.35
14	336.38	31.57	2.69	195.02	27.86	593.51	0.00	22.04	22.04	571.47	121.44	4.51	91.27	71.55
15	357.97	32.03	2.69	204.49	28.70	625.88	0.00	22.04	22.04	603.84	114.35	4.03	84.60	65.17
TOTAL	2712.36	349.62	32.12	1911.75	291.85	5297.70	1772.53	263.51	2036.04	3261.66	1753.37	1440.4	123.11	-26.53

* With salvage value of equipment; life of project 15 years.

NET PRESENT WORTH = Rs. 312.972 million

B/C RATIO = 1.22 : 1

IRR = 15.65 %

665

TABLE 9.38

SENSITIVITY ANALYSIS OF AGGREGATED PROJECT
ALT VII *

(Rs.Million)

YEARS	BENEFITS: Increase in Agri. Prod.	BENEFITS: Savings in off-Road Hauling Exp.	BENEFITS: Canal O&M Savings	BENEFITS: Vehicle Operating Cost (VOC) Savings	BENEFITS: Time Savings	BENEFITS: Total Benefits	COSTS: Capital Cost	COSTS: O & M Cost	COSTS: Total Cost	CASH FLOW	PRESENT WORTH: Benefits @ 12%	PRESENT WORTH: Costs @ 12%	PRESENT WORTH: CASH FLOW 18%	PRESENT WORTH: CASH FLOW 20%
0	0.00	0.00	0.00	0.00	0.00	0.00	0.00	0.00	0.00	0.00	0.00	0.00	0.00	0.00
1	0.00	0.00	0.00	0.00	0.00	0.00	347.27	0.00	347.27	-347.27	0.00	310.06	-294.29	-289.39
2	2.47	0.32	0.03	1.71	0.27	4.80	286.26	0.00	286.26	-281.46	3.83	228.21	-202.14	-195.46
3	11.10	1.46	0.13	7.72	1.20	21.61	174.74	1.10	175.84	-154.23	15.38	125.16	-93.87	-89.25
4	24.67	3.24	0.30	17.15	2.66	48.02	174.74	3.31	178.04	-130.02	30.52	113.15	-67.07	-62.70
5	43.18	5.66	0.52	30.01	4.66	84.03	210.38	5.51	215.89	-131.86	47.68	122.50	-57.64	-52.99
6	74.02	9.71	0.90	51.44	7.96	144.05	210.38	7.72	218.10	-74.04	72.98	110.49	-27.43	-24.80
7	112.26	14.72	1.36	78.02	12.11	218.48	206.71	11.02	217.73	0.75	98.83	98.49	0.24	0.21
8	157.91	20.71	1.91	109.75	17.03	307.31	226.92	14.33	241.25	66.07	124.12	97.44	17.58	15.36
9	222.06	29.12	2.69	154.33	23.95	432.16	0.00	17.64	17.64	414.52	155.84	6.36	93.46	80.34
10	249.80	29.69	2.69	161.66	24.69	468.52	0.00	22.04	22.04	446.48	150.85	7.10	85.31	72.11
11	271.43	30.16	2.69	169.36	25.44	499.08	0.00	22.04	22.04	477.04	143.47	6.34	77.24	64.20
12	293.11	30.63	2.69	177.47	26.20	530.11	0.00	22.04	22.04	508.06	136.07	5.66	69.72	56.98
13	314.76	31.11	2.69	186.02	27.01	561.58	0.00	22.04	22.04	539.54	128.70	5.05	62.74	50.43
14	336.38	31.57	2.69	195.02	27.86	593.51	0.00	22.04	22.04	571.47	121.44	4.51	56.32	44.51
15	357.97	32.03	2.69	204.49	28.70	625.88	0.00	22.04	22.04	603.84	114.35	4.03	50.43	39.19
16	379.54	32.49	2.69	214.48	29.56	658.75	0.00	22.04	22.04	636.71	107.46	3.60	45.06	34.44
17	401.12	32.94	2.69	225.01	30.48	692.23	0.00	22.04	22.04	670.19	100.82	3.21	40.20	30.21
18	422.66	33.39	2.69	236.10	31.39	726.23	0.00	22.04	22.04	704.19	94.44	2.87	35.79	26.45
19	444.20	33.84	2.69	247.81	31.89	760.42	0.00	22.04	22.04	738.38	88.29	2.56	31.81	23.11
20	465.71	34.28	2.69	260.15	33.34	796.17	0.00	22.04	22.04	774.12	82.54	2.29	28.26	20.19
21	465.71	34.07	2.69	260.15	34.37	796.99	0.00	22.04	22.04	774.94	73.77	2.04	23.97	16.84
22	465.71	33.85	2.69	260.15	35.45	797.85	0.00	22.04	22.04	775.81	65.94	1.82	20.34	14.05
23	465.71	33.36	2.69	260.15	36.51	798.42	0.00	22.04	22.04	776.38	58.91	1.63	17.25	11.72
24	465.71	33.45	2.69	260.15	37.61	799.61	0.00	22.04	22.04	777.57	52.68	1.45	14.64	9.78
25	465.71	33.33	2.69	260.15	38.78	800.66	0.00	22.04	22.04	778.62	47.10	1.30	12.42	8.16
26	465.71	33.39	2.69	260.15	39.98	801.92	0.00	22.04	22.04	779.88	42.12	1.16	10.55	6.81
27	465.71	33.46	2.69	260.15	41.20	803.21	0.00	22.04	22.04	781.16	37.67	1.03	8.95	5.69
28	465.71	33.53	2.69	260.15	42.47	804.55	0.00	22.04	22.04	782.51	33.69	0.92	7.60	4.75
29	465.71	34.10	2.69	260.15	43.76	806.41	0.00	22.04	22.04	784.37	30.15	0.82	6.46	3.97
30	465.71	33.75	2.69	260.15	45.12	807.42	0.00	22.04	22.04	785.37	26.95	0.74	5.48	3.31
TOTAL	9241.46	773.36	64.29	5329.23	781.66	16190.0	1837.38	523.5	2360.93	13829.1	2286.56	1272.0	79.37	-71.78

* Construction period enhanced to 8 years.

NET PRESENT WORTH = Rs.1014.59 million

B/C RATIO = 1.80 : 1

IRR = 19.05 %

666

TABLE 9.39

SENSITIVITY ANALYSIS OF AGGREGATED PROJECT
ALT VIII*

(Rs.Million)

YEARS	BENEFITS: Increase in Agri. Prod.	Savings in off-Road Hauling Exp.	Canal O&M Savings	Vehicle Operating Cost (VOC) Savings	Time Savings	Total Benefits	COSTS: Capital Cost	O & M Cost	Total Cost	CASH FLOW	PRESENT WORTH: Benefits @ 12%	Costs @ 12%	CASH FLOW 24%	CASH FLOW 26%
0	0.00	0.00	0.00	0.00	0.00	0.00	0.00	0.00	0.00	0.00	0.00	0.00	0.00	0.00
1	0.00	0.00	0.00	0.00	0.00	0.00	227.90	0.00	227.90	-227.90	0.00	203.48	-183.79	-180.87
2	4.17	3.71	0.40	16.83	2.88	27.99	284.01	3.31	287.32	-259.33	22.32	229.05	-168.66	-163.34
3	19.46	9.62	0.94	41.08	7.00	78.10	329.77	7.72	337.48	-259.39	55.59	240.21	-136.04	-129.67
4	49.99	15.43	1.61	73.68	12.36	153.06	326.99	13.31	340.30	-187.24	97.27	216.27	-79.20	-74.29
5	94.44	22.58	2.29	109.21	18.05	246.57	226.06	18.74	244.80	1.77	139.91	138.90	0.61	0.56
6	138.85	27.42	2.69	134.47	21.90	325.33	0.00	22.04	22.04	303.28	164.82	11.17	83.43	75.79
7	166.59	27.99	2.69	140.76	22.57	360.60	0.00	22.04	22.04	338.55	163.12	9.97	75.11	67.15
8	193.35	28.56	2.69	147.37	23.24	395.21	0.00	22.04	22.04	373.17	159.62	8.90	66.76	58.74
9	222.06	29.12	2.69	154.33	23.95	432.16	0.00	22.04	22.04	410.11	155.84	7.95	59.17	51.24
10	249.80	29.69	2.69	161.66	24.69	468.52	0.00	22.04	22.04	446.48	150.85	7.10	51.95	44.27
11	271.43	30.16	2.69	169.36	25.44	499.08	0.00	22.04	22.04	477.04	143.47	6.34	44.76	37.54
12	293.11	30.63	2.69	177.47	26.20	530.11	0.00	22.04	22.04	508.06	136.07	5.66	38.45	31.73
13	314.76	31.11	2.69	186.02	27.01	561.58	0.00	22.04	22.04	539.54	128.70	5.05	32.93	26.74
14	336.38	31.57	2.69	195.02	27.86	593.51	0.00	22.04	22.04	571.47	121.44	4.51	28.12	22.48
15	357.97	32.03	2.69	204.49	28.70	625.88	0.00	22.04	22.04	603.84	114.35	4.03	23.97	18.85
16	379.54	32.49	2.69	214.48	29.56	658.75	0.00	22.04	22.04	636.71	107.46	3.60	20.38	15.78
17	401.12	32.94	2.69	225.01	30.48	692.23	0.00	22.04	22.04	670.19	100.82	3.21	17.30	13.18
18	422.66	33.39	2.69	236.10	31.39	726.23	0.00	22.04	22.04	704.19	94.44	2.87	14.66	10.99
19	444.20	33.84	2.69	247.81	31.89	760.42	0.00	22.04	22.04	738.38	88.29	2.56	12.40	9.15
20	465.71	34.28	2.69	260.15	33.34	796.17	0.00	22.04	22.04	774.12	82.54	2.29	10.48	7.61
21	465.71	34.07	2.69	260.15	34.37	796.99	0.00	22.04	22.04	774.94	73.77	2.04	8.46	6.05
22	465.71	33.85	2.69	260.15	35.45	797.85	0.00	22.04	22.04	775.81	65.94	1.82	6.83	4.80
23	465.71	33.36	2.69	260.15	36.51	798.42	0.00	22.04	22.04	776.38	58.91	1.63	5.51	3.82
24	465.71	33.45	2.69	260.15	37.61	799.61	0.00	22.04	22.04	777.57	52.68	1.45	4.45	3.03
25	465.71	33.33	2.69	260.15	38.78	800.66	0.00	22.04	22.04	778.62	47.10	1.30	3.60	2.41
26	465.71	33.39	2.69	260.15	39.98	801.92	0.00	22.04	22.04	779.88	42.12	1.16	2.90	1.92
27	465.71	33.46	2.69	260.15	41.20	803.21	0.00	22.04	22.04	781.16	37.67	1.03	2.35	1.52
28	465.71	33.53	2.69	260.15	42.47	804.55	0.00	22.04	22.04	782.51	33.69	0.92	1.90	1.21
29	465.71	34.10	2.69	260.15	43.76	806.41	0.00	22.04	22.04	784.37	30.15	0.82	1.53	0.96
30	465.71	33.75	2.69	260.15	45.12	807.42	0.00	22.04	22.04	785.37	26.95	0.74	1.24	0.77
TOTAL	9482.69	852.84	72.44	5696.82	843.76	16948.6	1394.73	594.2	1988.90	14959.7	2695.87	1126.0	51.54	-29.90

* FX component excluded

NET PRESENT WORTH = Rs.1569.84 million

B/C RATIO = 2.39 : 1

IRR = 25.27 %

667

TABLE 9.40

SENSITIVITY ANALYSIS OF AGGREGATED PROJECT
ALT IX *

(Rs.Million)

YEARS	BENEFITS: Increase in Agri. Prod.	Savings in off-Road Hauling Exp.	Canal O&M Savings	Vehicle Operating Cost (VOC) Savings	Time Savings	Total Benefits	COSTS: Capital Cost	O & M Cost	Total Cost	CASH FLOW	PRESENT WORTH: Benefits @ 12%	Costs @ 12%	CASH FLOW 12%	CASH FLOW 14%
0	0.00	0.00	0.00	0.00	0.00	0.00	0.00	0.00	0.00	0.00	0.00	0.00	0.00	0.00
1	0.00	0.00	0.00	0.00	0.00	0.00	492.15	0.00	492.15	-492.15	0.00	439.42	-439.42	-431.71
2	2.3[illegible]	7.08	0.23	9.43	1.61	15.68	436.66	3.31	439.96	-424.29	12.50	350.74	-338.24	-326.47
3	10.9[illegible]	5.39	0.53	23.01	3.92	43.74	341.14	7.72	348.86	-305.12	31.13	248.31	-217.18	-205.95
4	27.9[illegible]	8.64	0.90	41.26	6.92	85.72	338.38	13.31	351.69	-265.98	54.47	223.51	-169.03	-157.48
5	52.89	12.65	1.28	61.16	10.11	138.08	229.06	18.74	247.79	-109.71	78.35	140.60	-62.25	-56.98
6	77.76	15.36	1.51	75.30	12.26	182.18	0.00	22.04	22.04	160.14	92.30	11.17	81.13	72.96
7	93.29	15.67	1.51	78.83	12.64	201.93	0.00	22.04	22.04	179.89	91.34	9.97	81.37	71.89
8	108.28	15.99	1.51	82.53	13.01	221.32	0.00	22.04	22.04	199.27	89.39	8.90	80.48	69.86
9	124.35	16.31	1.51	86.43	13.41	242.01	0.00	22.04	22.04	219.96	87.27	7.95	79.32	67.64
10	139.89	16.63	1.51	90.53	13.83	262.37	0.00	22.04	22.04	240.33	84.48	7.10	77.38	64.83
11	152.00	16.89	1.51	94.84	14.25	279.49	0.00	22.04	22.04	257.44	80.35	6.34	74.01	60.92
12	164.14	17.16	1.51	99.39	14.67	296.86	0.00	22.04	22.04	274.82	76.20	5.66	70.54	57.04
13	176.27	17.42	1.51	104.17	15.13	314.48	0.00	22.04	22.04	292.44	72.07	5.05	67.02	53.24
14	188.37	17.68	1.51	109.21	15.60	332.37	0.00	22.04	22.04	310.32	68.01	4.51	63.50	49.56
15	200.46	17.94	1.51	114.52	16.07	350.49	0.00	22.04	22.04	328.45	64.03	4.03	60.01	46.01
16	212.54	18.19	1.51	120.11	16.55	368.90	0.00	22.04	22.04	346.86	60.18	3.60	56.58	42.63
17	224.63	18.45	1.51	126.00	17.07	387.65	0.00	22.04	22.04	365.61	56.46	3.21	53.25	39.41
18	236.69	18.70	1.51	132.22	17.58	406.69	0.00	22.04	22.04	384.64	52.89	2.87	50.02	36.37
19	248.75	18.95	1.51	138.77	17.86	425.84	0.00	22.04	22.04	403.79	49.44	2.56	46.88	33.49
20	260.80	19.19	1.51	145.69	18.67	445.85	0.00	22.04	22.04	423.81	46.22	2.29	43.93	30.84
21	260.80	19.08	1.51	145.69	19.25	446.31	0.00	22.04	22.04	424.27	41.31	2.04	39.27	27.08
22	260.80	18.96	1.51	145.69	19.85	446.80	0.00	22.04	22.04	424.75	36.92	1.82	35.10	23.78
23	260.80	18.68	1.51	145.69	20.45	447.11	0.00	22.04	22.04	425.07	32.99	1.63	31.37	20.88
24	260.80	18.73	1.51	145.69	21.06	447.78	0.00	22.04	22.04	425.74	29.50	1.45	28.05	18.34
25	260.80	18.67	1.51	145.69	21.72	448.37	0.00	22.04	22.04	426.33	26.37	1.30	25.08	16.11
26	260.80	18.70	1.51	145.69	22.39	449.08	0.00	22.04	22.04	427.03	23.59	1.16	22.43	14.16
27	260.80	18.74	1.51	145.69	23.07	449.80	0.00	22.04	22.04	427.75	21.09	1.03	20.06	12.44
28	260.80	18.78	1.51	145.69	23.78	450.55	0.00	22.04	22.04	428.50	18.86	0.92	17.94	10.93
29	260.80	19.10	1.51	145.69	24.51	451.59	0.00	22.04	22.04	429.55	16.88	0.82	16.06	9.61
30	260.80	18.90	1.51	145.69	25.27	452.15	0.00	22.04	22.04	430.11	15.09	0.74	14.36	8.44
TOTAL	5310.31	477.59	40.57	3190.22	472.51	9491.2	1837.38	594.2	2431.55	7059.6	1509.69	1500.7	9.0	-220.14

* Benefits decreased by 44%

NET PRESENT WORTH = Rs. 9.00803 million

B/C RATIO = 1.01 : 1

IRR = 12.08 %

668

TABLE 9.41

SENSITIVITY ANALYSIS OF AGGREGATED PROJECT
ALT X *

(Rs.Million)

YEARS	BENEFITS: Increase in Agri. Prod.	BENEFITS: Savings in off-Road Hauling Exp.	BENEFITS: Canal O&M Savings	BENEFITS: Vehicle Operating Cost(VOC) Savings	BENEFITS: Time Savings	BENEFITS: Total Benefits	COSTS: Capital Cost	COSTS: O & M Cost	COSTS: Total Cost	CASH FLOW	PRESENT WORTH: Benefits @ 12%	PRESENT WORTH: Costs @ 12%	PRESENT WORTH: CASH FLOW 12%	PRESENT WORTH: CASH FLOW 14%
0	0.00	0.00	0.00	0.00	0.00	0.00	0.00	0.00	0.00	0.00	0.00	0.00	0.00	0.00
1	0.00	0.00	0.00	0.00	0.00	0.00	861.26	0.00	861.26	-861.26	0.00	768.99	-768.99	-755.49
2	4.17	3.71	0.40	16.83	2.88	27.99	764.15	3.31	767.46	-739.46	22.32	611.81	-589.49	-568.99
3	19.46	9.62	0.94	41.08	7.00	78.10	596.99	7.72	604.71	-526.61	55.59	430.42	-374.83	-355.45
4	49.99	15.43	1.61	73.68	12.36	153.06	592.17	13.31	605.48	-452.41	97.27	384.79	-287.52	-267.87
5	94.44	22.58	2.29	109.21	18.05	246.57	400.85	18.74	419.59	-173.02	139.91	238.08	-98.17	-89.86
6	138.85	27.42	2.69	134.47	21.90	325.33	0.00	22.04	22.04	303.28	164.82	11.17	153.65	138.17
7	166.59	27.99	2.69	140.76	22.57	360.60	0.00	22.04	22.04	338.55	163.12	9.97	153.14	135.30
8	193.35	28.56	2.69	147.37	23.24	395.21	0.00	22.04	22.04	373.17	159.62	8.90	150.72	130.82
9	222.06	29.12	2.69	154.33	23.95	432.16	0.00	22.04	22.04	410.11	155.84	7.95	147.89	126.11
10	249.80	29.69	2.69	161.66	24.69	468.52	0.00	22.04	22.04	446.48	150.85	7.10	143.75	120.43
11	271.43	30.16	2.69	169.36	25.44	499.08	0.00	22.04	22.04	477.04	143.47	6.34	137.14	112.88
12	293.11	30.63	2.69	177.47	26.20	530.11	0.00	22.04	22.04	508.06	136.07	5.66	130.41	105.45
13	314.76	31.11	2.69	186.02	27.01	561.58	0.00	22.04	22.04	539.54	128.70	5.05	123.65	98.23
14	336.38	31.57	2.69	195.02	27.86	593.51	0.00	22.04	22.04	571.47	121.44	4.51	116.93	91.27
15	357.97	32.03	2.69	204.49	28.70	625.88	0.00	22.04	22.04	603.84	114.35	4.03	110.32	84.60
16	379.54	32.49	2.69	214.48	29.56	658.75	0.00	22.04	22.04	636.71	107.46	3.60	103.86	78.25
17	401.12	32.94	2.69	225.01	30.48	692.23	0.00	22.04	22.04	670.19	100.82	3.21	97.61	72.25
18	422.66	33.39	2.69	236.10	31.39	726.23	0.00	22.04	22.04	704.19	94.44	2.87	91.57	66.59
19	444.20	33.84	2.69	247.81	31.89	760.42	0.00	22.04	22.04	738.38	88.29	2.56	85.73	61.25
20	465.71	34.28	2.69	260.15	33.34	796.17	0.00	22.04	22.04	774.12	82.54	2.29	80.25	56.33
21	465.71	34.07	2.69	260.15	34.37	796.99	0.00	22.04	22.04	774.94	73.77	2.04	71.73	49.46
22	465.71	33.85	2.69	260.15	35.45	797.85	0.00	22.04	22.04	775.81	65.94	1.82	64.11	43.44
23	465.71	33.36	2.69	260.15	36.51	798.42	0.00	22.04	22.04	776.38	58.91	1.63	57.29	38.13
24	465.71	33.45	2.69	260.15	37.61	799.61	0.00	22.04	22.04	777.57	52.68	1.45	51.23	33.50
25	465.71	33.33	2.69	260.15	38.78	800.66	0.00	22.04	22.04	778.62	47.10	1.30	45.80	29.42
26	465.71	33.39	2.69	260.15	39.98	801.92	0.00	22.04	22.04	779.88	42.12	1.16	40.96	25.85
27	465.71	33.46	2.69	260.15	41.20	803.21	0.00	22.04	22.04	781.16	37.67	1.03	36.63	22.71
28	465.71	33.53	2.69	260.15	42.47	804.55	0.00	22.04	22.04	782.51	33.69	0.92	32.76	19.96
29	465.71	34.10	2.69	260.15	43.76	806.41	0.00	22.04	22.04	784.37	30.15	0.82	29.32	17.55
30	465.71	33.75	2.69	260.15	45.12	807.42	0.00	22.04	22.04	785.37	26.95	0.74	26.21	15.41
TOTAL	9482.69	852.84	72.44	5696.82	843.76	16948.6	3215.42	594.2	3809.59	13139.0	2695.87	2532.2	163.67	-264.30

* Costs increased by 75%

NET PRESENT WORTH = Rs. 163.674 million

B/C RATIO = 1.06 : 1

IRR = 12.76 %

669

TABLE 9.42

SENSITIVITY ANALYSIS OF AGGREGATED PROJECT
ALT XI *

(Rs.Million)

YEARS	BENEFITS: Increase in Agri. Prod.	BENEFITS: Savings in off-Road Hauling Exp.	BENEFITS: Canal O&M Savings	BENEFITS: Vehicle Operating Cost (VOC) Savings	BENEFITS: Time Savings	BENEFITS: Total Benefits	COSTS: Capital Cost	COSTS: O & M Cost	COSTS: Total Cost	CASH FLOW	PRESENT WORTH: Benefits @ 12%	PRESENT WORTH: Costs @ 12%	PRESENT WORTH: CASH FLOW 12%	PRESENT WORTH: CASH FLOW 14%
0	0.00	0.00	0.00	0.00	0.00	0.00	0.00	0.00	0.00	0.00	0.00	0.00	0.00	0.00
1	0.00	0.00	0.00	0.00	0.00	0.00	713.62	0.00	713.62	-713.62	0.00	637.16	-637.16	-625.98
2	3.34	2.97	0.32	13.47	2.30	22.40	633.15	3.31	636.46	-614.06	17.85	507.38	-489.53	-472.50
3	15.57	7.69	0.75	32.87	5.60	62.48	494.65	7.72	502.37	-439.89	44.47	357.57	-313.10	-296.91
4	39.99	12.34	1.29	58.94	9.89	122.45	490.66	13.31	503.96	-381.51	77.82	320.28	-242.46	-225.89
5	75.55	18.07	1.83	87.37	14.44	197.26	332.13	18.74	350.87	-153.61	111.93	199.09	-87.16	-79.78
6	111.08	21.94	2.15	107.57	17.52	260.26	0.00	22.04	22.04	238.22	131.86	11.17	120.69	108.53
7	133.27	22.39	2.15	112.61	18.06	288.48	0.00	22.04	22.04	266.43	130.49	9.97	120.52	106.48
8	154.68	22.85	2.15	117.90	18.59	316.17	0.00	22.04	22.04	294.12	127.69	8.90	118.79	103.11
9	177.65	23.30	2.15	123.47	19.16	345.72	0.00	22.04	22.04	323.68	124.67	7.95	116.72	99.53
10	199.84	23.75	2.15	129.32	19.75	374.82	0.00	22.04	22.04	352.77	120.68	7.10	113.58	95.16
11	217.14	24.13	2.15	135.49	20.35	399.27	0.00	22.04	22.04	377.22	114.78	6.34	108.44	89.26
12	234.49	24.51	2.15	141.98	20.96	424.09	0.00	22.04	22.04	402.04	108.85	5.66	103.19	83.45
13	251.81	24.88	2.15	148.81	21.61	449.26	0.00	22.04	22.04	427.22	102.96	5.05	97.91	77.78
14	269.10	25.26	2.15	156.01	22.29	474.81	0.00	22.04	22.04	452.77	97.16	4.51	92.64	72.31
15	286.38	25.62	2.15	163.59	22.96	500.70	0.00	22.04	22.04	478.66	91.48	4.03	87.45	67.06
16	303.63	25.99	2.15	171.58	23.65	527.00	0.00	22.04	22.04	504.96	85.97	3.60	82.37	62.06
17	320.90	26.35	2.15	180.00	24.38	553.79	0.00	22.04	22.04	531.74	80.66	3.21	77.45	57.32
18	338.13	26.71	2.15	188.88	25.11	580.98	0.00	22.04	22.04	558.94	75.55	2.87	72.68	52.85
19	355.36	27.07	2.15	198.25	25.51	608.34	0.00	22.04	22.04	586.29	70.63	2.56	68.07	48.63
20	372.57	27.42	2.15	208.12	26.67	636.93	0.00	22.04	22.04	614.89	66.03	2.29	63.74	44.74
21	372.57	27.25	2.15	208.12	27.50	637.59	0.00	22.04	22.04	615.55	59.02	2.04	56.97	39.29
22	372.57	27.08	2.15	208.12	28.36	638.28	0.00	22.04	22.04	616.24	52.75	1.82	50.93	34.50
23	372.57	26.69	2.15	208.12	29.21	638.74	0.00	22.04	22.04	616.69	47.13	1.63	45.50	30.29
24	372.57	26.76	2.15	208.12	30.09	639.69	0.00	22.04	22.04	617.65	42.14	1.45	40.69	26.61
25	372.57	26.67	2.15	208.12	31.02	640.53	0.00	22.04	22.04	618.49	37.68	1.30	36.38	23.37
26	372.57	26.71	2.15	208.12	31.98	641.54	0.00	22.04	22.04	619.49	33.69	1.16	32.54	20.54
27	372.57	26.77	2.15	208.12	32.96	642.57	0.00	22.04	22.04	620.52	30.13	1.03	29.10	18.04
28	372.57	26.82	2.15	208.12	33.98	643.64	0.00	22.04	22.04	621.60	26.95	0.92	26.03	15.86
29	372.57	27.28	2.15	208.12	35.01	645.13	0.00	22.04	22.04	623.09	24.12	0.82	23.29	13.94
30	372.57	27.00	2.15	208.12	36.10	645.93	0.00	22.04	22.04	623.89	21.56	0.74	20.82	12.25
TOTAL	7586.15	682.27	57.95	4557.46	675.01	13558.8	2664.21	594.2	3258.38	10300.5	2156.70	2119.6	37.1	-298.11

* Benefits decreased by 20% & Costs increased by 45%

NET PRESENT WORTH = Rs. 37.1068 million

B/C RATIO = 1.02 : 1

IRR = 12.22 %

670

TABLE 9.43

SUMMARY OF SENSITIVITY ANALYSIS
FOR AGGREGATED CANAL ROADS PROJECT

ALT	BENEFITS TOTAL OVER 30 Yrs. Incr.Agr Prod	Savings Hauling Cost	Canal O&M	Savings in VOC	Time Savings	Total Benefits	COSTS Invest. Costs (Eco)	O & M COSTS	Total 30 Yr Costs	PW at 12% Benefits	Costs	NPW	B/C Ratio	IRR %
0	9482.69	852.84	72.44	5696.82	843.76	16948.56	1837.38	594.2	2431.55	2695.87	1500.7	1195.19	1.80	19.56
I	8534.42	767.56	65.20	5127.14	759.38	15253.70	1837.38	594.2	2431.55	2426.28	1500.7	925.60	1.62	17.98
II	9482.69	852.84	72.44	5696.82	843.76	16948.56	2021.12	594.2	2615.29	2695.87	1638.2	1057.66	1.65	18.22
IIA	9482.69	852.84	72.44	5696.82	843.76	16948.6	2021.12	653.6	2674.71	2695.87	1650.7	1045.12	1.63	18.13
III	8534.42	767.56	65.20	5127.14	759.38	15253.70	2021.12	594.2	2615.29	2426.28	1638.2	788.07	1.48	16.82
IV	9482.69	852.84	72.44	5696.82	843.76	16948.56	1772.53	594.2	2366.70	2695.87	1467.8	1228.05	1.84	19.80
V	4825.59	516.55	45.56	3095.30	448.51	8931.51	1772.53	373.7	2146.26	2226.91	1454.9	772.00	1.53	18.52
VI	2712.36	349.62	32.12	1911.75	291.85	5297.70	1772.53	263.5	2036.04	1753.37	1440.4	312.97	1.22	15.65
VII	9241.46	773.36	64.29	5329.23	781.66	16190.0	1837.38	523.5	2360.93	2286.56	1272.0	1014.59	1.80	19.05
VIII	9482.69	852.84	72.44	5696.82	843.76	16948.6	1394.73	594.2	1988.90	2695.87	1126.0	1569.85	2.39	25.27
IX	5310.31	477.59	40.57	3190.22	472.51	9491.2	1837.38	594.2	2431.55	1509.69	1500.7	9.01	1.01	12.08
X	9482.69	852.84	72.44	5696.82	843.76	16948.6	3215.42	594.2	3809.59	2695.87	2532.2	163.67	1.06	12.76
XI	7586.15	682.27	57.95	4557.46	675.01	13558.8	2664.21	594.2	3258.38	2156.70	2119.6	37.11	1.02	12.22

0 Original analysis, as basis for comparision
I Benefits decreased by 10%
II Capital Costs increased by 10%
IIA Capital and O&M Costs increased by 10%
III Benefits decreased and Capital Costs increased by 10%
IV With salvage value of equipments.
V With salvage value of equipment; life of project 20 years.
VI With salvage value of equipment; life of project 15 years.
VII Construction period enhanced to 8 years.
VIII FX component excluded
IX Benefits decreased by 44%
X Capital Costs increased by 75%
XI Benefits decreased by 20% & Capital Costs increased by 45%

671

TABLE 9.44.1

SENSITIVITY ANALYSIS OF JHANG SYSTEM
ALT I *

(Rs.Million)

YEARS	BENEFITS: Increase in Agri. Prod.	Savings in off-Road Hauling Exp.	Canal D&M Savings	Vehicle Operating Cost (VOC) Savings	Time Savings	Total Benefits	COSTS: Capital Cost	O & M Cost	Total Cost	CASH FLOW	PRESENT WORTH: Benefits @ 12%	Costs @ 12%	CASH FLOW 24%	CASH FLOW 26%
0	0.00	0.00	0.00	0.00	0.00	0.00	0.00	0.00	0.00	0.00	0.00	0.00	0.00	0.00
1	0.00	0.00	0.00	0.00	0.00	0.00	48.05	0.00	48.05	-48.05	0.00	42.90	38.75	-38.14
2	0.64	0.45	0.03	1.91	0.23	3.26	42.63	0.38	43.02	-39.76	2.60	34.29	-25.86	-25.04
3	2.96	1.06	0.06	4.68	0.58	9.34	33.31	0.90	34.20	-24.87	6.65	24.35	-13.04	-12.43
4	7.61	1.88	0.11	8.40	1.01	19.00	33.04	1.53	34.57	-15.58	12.07	21.97	-6.59	-6.18
5	14.36	2.79	0.15	12.46	1.48	31.23	22.37	2.17	24.54	6.69	17.72	13.92	2.28	2.11
6	21.11	3.43	0.18	15.36	[illegible]	41.86	0.00	2.56	2.56	39.30	21.21	1.29	10.81	9.82
7	25.31	3.52	0.18	16.09	1.85	46.94	0.00	2.56	2.56	44.39	21.23	1.16	9.85	8.80
8	29.51	3.61	0.18	16.86	1.90	52.06	0.00	2.56	2.56	49.50	21.03	1.03	8.86	7.79
9	33.71	3.70	0.18	17.66	1.95	57.20	0.00	2.56	2.56	54.65	20.63	0.92	7.88	6.83
10	37.90	3.79	0.18	18.51	2.01	62.39	0.00	2.56	2.56	59.83	20.09	0.82	6.96	5.93
11	41.45	3.86	0.18	19.40	2.07	66.97	0.00	2.56	2.56	64.41	19.25	0.73	6.04	5.07
12	45.01	3.93	0.18	20.34	2.13	71.59	0.00	2.56	2.56	69.03	18.38	0.66	5.22	4.31
13	48.56	4.00	0.18	21.32	2.20	76.25	0.00	2.56	2.56	73.70	17.47	0.59	4.50	3.65
14	52.09	4.06	0.18	22.36	2.27	80.96	0.00	2.56	2.56	78.40	16.57	0.52	3.86	3.08
15	55.62	4.13	0.18	23.45	2.33	85.70	0.00	2.56	2.56	83.15	15.66	0.47	3.30	2.60
16	59.15	4.19	0.18	24.59	2.40	90.51	0.00	2.56	2.56	87.95	14.76	0.42	2.82	2.18
17	62.68	4.26	0.18	25.79	2.48	95.38	0.00	2.56	2.56	92.82	13.89	0.37	2.40	1.83
18	66.19	4.32	0.18	27.06	2.55	100.28	0.00	2.56	2.56	97.73	13.04	0.33	2.03	1.53
19	69.70	4.38	0.18	28.39	2.63	105.26	0.00	2.56	2.56	102.71	12.22	0.30	1.72	1.27
20	73.20	4.43	0.18	29.79	2.70	110.29	0.00	2.56	2.56	107.74	11.43	0.26	1.46	1.06
21	73.20	4.39	0.18	29.79	2.78	110.33	0.00	2.56	2.56	107.77	10.21	0.24	1.18	0.84
22	73.20	4.34	0.18	29.79	2.87	110.37	0.00	2.56	2.56	107.81	9.12	0.21	0.95	0.67
23	73.20	4.29	0.18	29.79	2.95	110.40	0.00	2.56	2.56	107.84	8.15	0.19	0.77	0.53
24	73.20	4.24	0.18	29.79	3.04	110.44	0.00	2.56	2.56	107.88	7.28	0.17	0.62	0.42
25	73.20	4.18	0.18	29.79	3.13	110.48	0.00	2.56	2.56	107.92	6.50	0.15	0.50	0.33
26	73.20	4.13	0.18	29.79	3.23	110.52	0.00	2.56	2.56	107.96	5.80	0.13	0.40	0.27
27	73.20	4.07	0.18	29.79	3.32	110.55	0.00	2.56	2.56	108.00	5.18	0.12	0.32	0.21
28	73.20	4.02	0.18	29.79	3.42	110.60	0.00	2.56	2.56	108.04	4.63	0.11	0.26	0.17
29	73.20	3.96	0.18	29.79	3.53	110.64	0.00	2.56	2.56	108.09	4.14	0.10	0.21	0.13
30	73.20	3.89	0.18	29.79	3.64	110.69	0.00	2.56	2.56	108.13	3.69	0.09	0.17	0.11
TOTAL	1478.69	107.31	4.78	652.27	68.45	2311.50	179.40	68.89	248.28	2063.21	360.60	148.81	1.14	-10.25

* Benefits decreased by 10%

NET PRESENT WORTH = Rs. 211.792 million

B/C RATIO = 2.42 : 1

IRR = 24.20 %

672

TABLE 9.44.2

SENSITIVITY ANALYSIS OF JHANG SYSTEM
ALT II *

(Rs.Million)

YEARS	BENEFITS: Increase in Agri. Prod.	Savings in off-Road Hauling Exp.	Canal O&M Savings	Vehicle Operating Cost(VOC) Savings	Time Savings	Total Benefits	COSTS: Capital Cost	O & M Cost	Total Cost	CASH FLOW	PRESENT WORTH: Benefits @ 12%	Costs @ 12%	CASH FLOW 24%	CASH FLOW 26%
0	0.00	0.00	0.00	0.00	0.00	0.00	0.00	0.00	0.00	0.00	0.00	0.00	0.00	0.00
1	0.00	0.00	0.00	0.00	0.00	0.00	52.86	0.00	52.86	-52.86	0.00	47.19	-42.63	-41.95
2	0.71	0.50	0.03	2.13	0.26	3.62	46.90	0.38	47.28	-43.66	2.89	37.69	-28.39	-27.50
3	3.29	1.18	0.07	5.20	0.64	10.37	36.64	0.90	37.53	-27.16	7.38	26.72	-14.24	-13.58
4	8.45	2.09	0.12	9.33	1.12	21.11	36.34	1.53	37.88	-16.77	13.41	24.07	-7.09	-6.65
5	15.95	3.10	0.17	13.85	1.64	34.70	24.60	2.17	26.77	7.93	19.69	15.19	2.70	2.50
6	23.45	3.81	0.20	17.06	1.99	46.51	0.00	2.56	2.56	43.96	23.56	1.29	12.09	10.98
7	28.12	3.91	0.20	17.88	2.05	52.16	0.00	2.56	2.56	49.60	23.59	1.16	11.00	9.84
8	32.79	4.02	0.20	18.73	2.11	57.84	0.00	2.56	2.56	55.29	23.36	1.03	9.89	8.70
9	37.45	4.12	0.20	19.63	2.17	63.56	0.00	2.56	2.56	61.00	22.92	0.92	8.80	7.62
10	42.11	4.22	0.20	20.57	2.23	69.32	0.00	2.56	2.56	66.77	22.32	0.82	7.77	6.62
11	46.06	4.29	0.20	21.56	2.30	74.41	0.00	2.56	2.56	71.85	21.39	0.73	6.74	5.65
12	50.01	4.37	0.20	22.60	2.37	79.55	0.00	2.56	2.56	76.99	20.42	0.66	5.83	4.81
13	53.95	4.44	0.20	23.69	2.44	84.72	0.00	2.56	2.56	82.17	19.42	0.59	5.01	4.07
14	57.88	4.52	0.20	24.84	2.52	89.96	0.00	2.56	2.56	87.40	18.41	0.52	4.30	3.44
15	61.80	4.59	0.20	26.05	2.59	95.23	0.00	2.56	2.56	92.67	17.40	0.47	3.68	2.89
16	65.72	4.66	0.20	27.32	2.67	100.57	0.00	2.56	2.56	98.01	16.40	0.42	3.14	2.43
17	69.64	4.73	0.20	28.66	2.75	105.97	0.00	2.56	2.56	103.42	15.43	0.37	2.67	2.03
18	73.54	4.80	0.20	30.06	2.83	111.43	0.00	2.56	2.56	108.87	14.49	0.33	2.27	1.70
19	77.44	4.86	0.20	31.54	2.92	116.96	0.00	2.56	2.56	114.40	13.58	0.30	1.92	1.42
20	81.33	4.93	0.20	33.10	3.00	122.55	0.00	2.56	2.56	119.99	12.70	0.26	1.62	1.18
21	81.33	4.87	0.20	33.10	3.09	122.59	0.00	2.56	2.56	120.03	11.35	0.24	1.31	0.94
22	81.33	4.82	0.20	33.10	3.19	122.63	0.00	2.56	2.56	120.08	10.13	0.21	1.06	0.74
23	81.33	4.77	0.20	33.10	3.28	122.67	0.00	2.56	2.56	120.11	9.05	0.19	0.85	0.59
24	81.33	4.71	0.20	33.10	3.38	122.71	0.00	2.56	2.56	120.15	8.08	0.17	0.69	0.47
25	81.33	4.65	0.20	33.10	3.48	122.75	0.00	2.56	2.56	120.20	7.22	0.15	0.56	0.37
26	81.33	4.59	0.20	33.10	3.59	122.80	0.00	2.56	2.56	120.24	6.45	0.13	0.45	0.30
27	81.33	4.53	0.20	33.10	3.69	122.84	0.00	2.56	2.56	120.28	5.76	0.12	0.36	0.23
28	81.33	4.46	0.20	33.10	3.80	122.88	0.00	2.56	2.56	120.33	5.15	0.11	0.29	0.19
29	81.33	4.40	0.20	33.10	3.92	122.94	0.00	2.56	2.56	120.38	4.60	0.10	0.24	0.15
30	81.33	4.33	0.20	33.10	4.04	122.99	0.00	2.56	2.56	120.43	4.11	0.09	0.19	0.12
TOTAL	1642.99	119.23	5.31	724.74	76.06	2568.33	197.34	68.89	266.22	2302.11	400.67	162.24	3.07	-9.70

* Costs increased by 10%

NET PRESENT WORTH = Rs. 238.430 million

B/C RATIO = 2.47 : 1

IRR = 24.48 %

172

TABLE 9.44.3

SENSITIVITY ANALYSIS OF JHANG SYSTEM
ALT III *

(Rs.Million)

YEARS	BENEFITS: Increase in Agri. Prod.	BENEFITS: Savings in off-Road Hauling Exp.	BENEFITS: Canal O&M Savings	BENEFITS: Vehicle Operating Cost(VOC) Savings	BENEFITS: Time Savings	BENEFITS: Total Benefits	COSTS: Capital Cost	COSTS: O & M Cost	COSTS: Total Cost	CASH FLOW	PRESENT WORTH: Benefits @ 12%	PRESENT WORTH: Costs @ 12%	PRESENT WORTH: CASH FLOW 22%	PRESENT WORTH: CASH FLOW 24%
0	0.00	0.00	0.00	0.00	0.00	0.00	0.00	0.00	0.00	0.00	0.00	0.00	0.00	0.00
1	0.00	0.00	0.00	0.00	0.00	0.00	52.86	0.00	52.86	-52.86	0.00	47.19	-43.33	-42.63
2	0.64	0.45	0.03	1.91	0.23	3.26	46.90	0.38	47.28	-44.02	2.60	37.69	-29.58	-28.63
3	2.96	1.06	0.06	4.68	0.58	9.34	36.64	0.90	37.53	-28.20	6.65	26.72	-15.53	-14.79
4	7.61	1.86	0.11	8.40	1.01	19.00	36.34	1.53	37.88	-18.88	12.07	24.07	-8.52	-7.99
5	14.36	2.79	0.15	12.46	1.48	31.23	24.60	2.17	26.77	4.46	17.72	15.19	1.65	1.52
6	21.11	3.43	0.18	15.36	1.79	41.86	0.00	2.56	2.56	39.30	21.21	1.29	11.92	10.81
7	25.31	3.52	0.18	16.09	1.85	46.94	0.00	2.56	2.56	44.39	21.23	1.16	11.03	9.85
8	29.51	3.61	0.18	16.86	1.90	52.06	0.00	2.56	2.56	49.50	21.03	1.03	10.09	8.86
9	33.71	3.70	0.18	17.66	1.95	57.20	0.00	2.56	2.56	54.65	20.63	0.92	9.13	7.88
10	37.90	3.79	0.18	18.51	2.01	62.39	0.00	2.56	2.56	59.83	20.09	0.82	8.19	6.96
11	41.45	3.86	0.18	19.40	2.07	66.97	0.00	2.56	2.56	64.41	19.25	0.73	7.23	6.04
12	45.01	3.93	0.18	20.34	2.13	71.59	0.00	2.56	2.56	69.03	18.38	0.66	6.35	5.22
13	48.56	4.00	0.18	21.32	2.20	76.25	0.00	2.56	2.56	73.70	17.47	0.59	5.56	4.50
14	52.09	4.06	0.18	22.36	2.27	80.96	0.00	2.56	2.56	78.40	16.57	0.52	4.85	3.86
15	55.62	4.13	0.18	23.45	2.33	85.70	0.00	2.56	2.56	83.15	15.66	0.47	4.21	3.30
16	59.15	4.19	0.18	24.59	2.40	90.51	0.00	2.56	2.56	87.95	14.76	0.42	3.65	2.82
17	62.68	4.26	0.18	25.79	2.48	95.38	0.00	2.56	2.56	92.82	13.89	0.37	3.16	2.40
18	66.19	4.32	0.18	27.06	2.55	100.28	0.00	2.56	2.56	97.73	13.04	0.33	2.73	2.03
19	69.70	4.38	0.18	28.39	2.63	105.26	0.00	2.56	2.56	102.71	12.22	0.30	2.35	1.72
20	73.20	4.43	0.18	29.79	2.70	110.29	0.00	2.56	2.56	107.74	11.43	0.26	2.02	1.46
21	73.20	4.39	0.18	29.79	2.78	110.33	0.00	2.56	2.56	107.77	10.21	0.24	1.66	1.18
22	73.20	4.34	0.18	29.79	2.87	110.37	0.00	2.56	2.56	107.81	9.12	0.21	1.36	0.95
23	73.20	4.29	0.18	29.79	2.95	110.40	0.00	2.56	2.56	107.84	8.15	0.19	1.11	0.77
24	73.20	4.24	0.18	29.79	3.04	110.44	0.00	2.56	2.56	107.88	7.28	0.17	0.91	0.62
25	73.20	4.18	0.18	29.79	3.13	110.48	0.00	2.56	2.56	107.92	6.50	0.15	0.75	0.50
26	73.20	4.13	0.18	29.79	3.23	110.52	0.00	2.56	2.56	107.96	5.80	0.13	0.61	0.40
27	73.20	4.07	0.18	29.79	3.32	110.55	0.00	2.56	2.56	108.00	5.18	0.12	0.50	0.32
28	73.20	4.02	0.18	29.79	3.42	110.60	0.00	2.56	2.56	108.04	4.63	0.11	0.41	0.26
29	73.20	3.96	0.18	29.79	3.53	110.64	0.00	2.56	2.56	108.09	4.14	0.10	0.34	0.21
30	73.20	3.89	0.18	29.79	3.64	110.69	0.00	2.56	2.56	108.13	3.69	0.09	0.28	0.17
TOTAL	1478.69	107.31	4.78	652.27	68.45	2311.50	197.34	68.89	266.22	2045.27	360.60	162.24	5.08	-9.42

* Benefits decreased & Cost increased by 10%

NET PRESENT WORTH = Rs. 198.363 million

B/C RATIO = 2.22 : 1

IRR = 22.70 %

674

TABLE 9.44.4

SENSITIVITY ANALYSIS OF JHANG SYSTEM
ALT IV *

(Rs.Million)

YEARS	BENEFITS: Increase in Agri. Prod.	Savings in off-Road Hauling Exp.	Canal O&M Savings	Vehicle Operating Cost (VOC) Savings	Time Savings	Total Benefits	COSTS: Capital Cost	O & M Cost	Total Cost	CASH FLOW	PRESENT WORTH: Benefits @ 12%	Costs @ 12%	CASH FLOW 12%	CASH FLOW 14%
0	0.00	0.00	0.00	0.00	0.00	0.00	0.00	0.00	0.00	0.00	0.00	0.00	0.00	0.00
1	0.00	0.00	0.00	0.00	0.00	0.00	48.05	0.00	48.05	-48.05	0.00	42.90	-42.90	-42.15
2	0.28	0.20	0.01	0.85	0.10	1.45	42.63	0.38	43.02	-41.57	1.16	34.29	-33.14	-31.99
3	1.32	0.47	0.03	2.08	0.26	4.15	33.31	0.90	34.20	-30.05	2.95	24.35	-21.39	-20.29
4	3.38	0.84	0.05	3.73	0.45	8.44	33.04	1.53	34.57	-26.13	5.37	21.97	-16.61	-15.47
5	6.38	1.24	0.07	5.54	0.66	13.88	22.37	2.17	24.54	-10.66	7.89	13.92	-6.05	-5.54
6	9.38	1.52	0.08	6.82	0.80	18.60	0.00	2.56	2.56	16.05	9.43	1.29	8.13	7.31
7	11.25	1.57	0.08	7.15	0.82	20.86	0.00	2.56	2.56	18.31	9.44	1.16	8.28	7.32
8	13.12	1.61	0.08	7.49	0.84	23.14	0.00	2.56	2.56	20.58	9.34	1.03	8.31	7.21
9	14.98	1.65	0.08	7.85	0.87	25.42	0.00	2.56	2.56	22.87	9.17	0.92	8.25	7.03
10	16.84	1.69	0.08	8.23	0.89	27.73	0.00	2.56	2.56	25.17	8.93	0.82	8.10	6.79
11	18.42	1.72	0.08	8.62	0.92	29.76	0.00	2.56	2.56	27.21	8.56	0.73	7.82	6.44
12	20.00	1.75	0.08	9.04	0.95	31.82	0.00	2.56	2.56	29.26	8.17	0.66	7.51	6.07
13	21.58	1.78	0.08	9.48	0.98	33.89	0.00	2.56	2.56	31.33	7.77	0.59	7.18	5.70
14	23.15	1.81	0.08	9.94	1.01	35.98	0.00	2.56	2.56	33.43	7.36	0.52	6.84	5.34
15	24.72	1.84	0.08	10.42	1.04	38.09	0.00	2.56	2.56	35.53	6.96	0.47	6.49	4.98
16	26.29	1.86	0.08	10.93	1.07	40.23	0.00	2.56	2.56	37.67	6.56	0.42	6.14	4.63
17	27.86	1.89	0.08	11.46	1.10	42.39	0.00	2.56	2.56	39.83	6.17	0.37	5.80	4.29
18	29.42	1.92	0.08	12.03	1.13	44.57	0.00	2.56	2.56	42.01	5.80	0.33	5.46	3.97
19	30.98	1.94	0.08	12.62	1.17	46.78	0.00	2.56	2.56	44.23	5.43	0.30	5.14	3.67
20	32.53	1.97	0.08	13.24	1.20	49.02	0.00	2.56	2.56	46.46	5.08	0.26	4.82	3.38
21	32.53	1.95	0.08	13.24	1.24	49.03	0.00	2.56	2.56	46.48	4.54	0.24	4.30	2.97
22	32.53	1.93	0.08	13.24	1.28	49.05	0.00	2.56	2.56	46.50	4.05	0.21	3.84	2.60
23	32.53	1.91	0.08	13.24	1.31	49.07	0.00	2.56	2.56	46.51	3.62	0.19	3.43	2.28
24	32.53	1.88	0.08	13.24	1.35	49.08	0.00	2.56	2.56	46.53	3.23	0.17	3.07	2.00
25	32.53	1.86	0.08	13.24	1.39	49.10	0.00	2.56	2.56	46.54	2.89	0.15	2.74	1.76
26	32.53	1.84	0.08	13.24	1.44	49.12	0.00	2.56	2.56	46.56	2.58	0.13	2.45	1.54
27	32.53	1.81	0.08	13.24	1.48	49.14	0.00	2.56	2.56	46.58	2.30	0.12	2.18	1.35
28	32.53	1.78	0.08	13.24	1.52	49.15	0.00	2.56	2.56	46.60	2.06	0.11	1.95	1.19
29	32.53	1.76	0.08	13.24	1.57	49.18	0.00	2.56	2.56	46.62	1.84	0.10	1.74	1.04
30	32.53	1.73	0.08	13.24	1.62	49.20	0.00	2.56	2.56	46.64	1.64	0.09	1.56	0.92
TOTAL	657.20	47.69	2.12	289.90	30.42	1027.33	179.40	68.89	248.28	779.05	160.27	148.81	11.46	-13.62

* Benefits decreased by 60%

NET PRESENT WORTH = Rs11.4565 million

B/C RATIO = 1.08 : 1

IRR = 12.91 %

675

TABLE 9.44.5

SENSITIVITY ANALYSIS OF JHANG SYSTEM
ALT V *

(Rs.Million)

YEARS	BENEFITS: Increase in Agri. Prod.	Savings in off-Road Hauling Exp.	Canal O&M Savings	Vehicle Operating Cost(VOC) Savings	Time Savings	Total Benefits	COSTS: Capital Cost	O & M Cost	Total Cost	CASH FLOW	PRESENT WORTH: Benefits @ 12%	Costs @ 12%	CASH FLOW 12%	CASH FLOW 14%
0	0.00	0.00	0.00	0.00	0.00	0.00	0.00	0.00	0.00	0.00	0.00	0.00	0.00	0.00
1	0.00	0.00	0.00	0.00	0.00	0.00	132.14	0.00	132.14	-132.14	0.00	117.98	-117.98	-115.91
2	0.71	0.50	0.03	2.13	0.26	3.62	117.24	0.38	117.63	-114.00	2.89	93.77	-90.88	-87.72
3	3.29	1.18	0.07	5.20	0.64	10.37	91.60	0.90	92.49	-82.12	7.38	65.83	-58.45	-55.43
4	8.45	2.09	0.12	9.33	1.12	21.11	90.86	1.53	92.39	-71.28	13.41	58.72	-45.30	-42.21
5	15.95	3.10	0.17	13.85	1.64	34.70	61.50	2.17	63.68	-28.97	19.69	36.13	-16.44	-15.05
6	23.45	3.81	0.20	17.06	1.99	46.51	0.00	2.56	2.56	43.96	23.56	1.29	22.27	20.03
7	28.12	3.91	0.20	17.88	2.05	52.16	0.00	2.56	2.56	49.60	23.59	1.16	22.44	19.82
8	32.79	4.02	0.20	18.73	2.11	57.84	0.00	2.56	2.56	55.29	23.36	1.03	22.33	19.38
9	37.45	4.12	0.20	19.63	2.17	63.56	0.00	2.56	2.56	61.00	22.92	0.92	22.00	18.76
10	42.11	4.22	0.20	20.57	2.23	69.32	0.00	2.56	2.56	66.77	22.32	0.82	21.50	18.01
11	46.06	4.29	0.20	21.56	2.30	74.41	0.00	2.56	2.56	71.85	21.39	0.73	20.66	17.00
12	50.01	4.37	0.20	22.60	2.37	79.55	0.00	2.56	2.56	76.99	20.42	0.66	19.76	15.98
13	53.95	4.44	0.20	23.69	2.44	84.72	0.00	2.56	2.56	82.17	19.42	0.59	18.83	14.96
14	57.88	4.52	0.20	24.84	2.52	89.96	0.00	2.56	2.56	87.40	18.41	0.52	17.88	13.96
15	61.80	4.59	0.20	26.05	2.59	95.23	0.00	2.56	2.56	92.67	17.40	0.47	16.93	12.98
16	65.72	4.66	0.20	27.32	2.67	100.57	0.00	2.56	2.56	98.01	16.40	0.42	15.99	12.04
17	69.64	4.73	0.20	28.66	2.75	105.97	0.00	2.56	2.56	103.42	15.43	0.37	15.06	11.15
18	73.54	4.80	0.20	30.06	2.83	111.43	0.00	2.56	2.56	108.87	14.49	0.33	14.16	10.29
19	77.44	4.86	0.20	31.54	2.92	116.96	0.00	2.56	2.56	114.40	13.58	0.30	13.28	9.49
20	81.33	4.93	0.20	33.10	3.00	122.55	0.00	2.56	2.56	119.99	12.70	0.26	12.44	8.73
21	81.33	4.87	0.20	33.10	3.09	122.59	0.00	2.56	2.56	120.03	11.35	0.24	11.11	7.66
22	81.33	4.82	0.20	33.10	3.19	122.63	0.00	2.56	2.56	120.08	10.13	0.21	9.92	6.72
23	81.33	4.77	0.20	33.10	3.28	122.67	0.00	2.56	2.56	120.11	9.05	0.19	8.86	5.90
24	81.33	4.71	0.20	33.10	3.38	122.71	0.00	2.56	2.56	120.15	8.08	0.17	7.92	5.18
25	81.33	4.65	0.20	33.10	3.48	122.75	0.00	2.56	2.56	120.20	7.22	0.15	7.07	4.54
26	81.33	4.59	0.20	33.10	3.59	122.80	0.00	2.56	2.56	120.24	6.45	0.13	6.32	3.99
27	81.33	4.53	0.20	33.10	3.69	122.84	0.00	2.56	2.56	120.28	5.76	0.12	5.64	3.50
28	81.33	4.46	0.20	33.10	3.80	122.88	0.00	2.56	2.56	120.33	5.15	0.11	5.04	3.07
29	81.33	4.40	0.20	33.10	3.92	122.94	0.00	2.56	2.56	120.38	4.60	0.10	4.50	2.69
30	81.33	4.33	0.20	33.10	4.04	122.99	0.00	2.56	2.56	120.43	4.11	0.09	4.02	2.36
TOTAL	1642.99	119.23	5.31	724.74	76.06	2568.33	493.34	68.89	562.23	2006.10	400.67	383.81	16.86	-48.12

* Costs increased by 175%

NET PRESENT WORTH = Rs16.8581 million

B/C RATIO = 1.04 : 1

IRR = 12.52 %

676

TABLE 9.45.1

SENSITIVITY ANALYSIS OF GOGERA SYSTEM
ALT I *

(Rs.Million)

YEARS	BENEFITS: Increase in Agri. Prod.	Savings in off-Road Hauling Exp.	Canal O&M Savings	Vehicle Operating Cost(VOC) Savings	Time Savings	Total Benefits	COSTS: Capital Cost	O & M Cost	Total Cost	CASH FLOW	PRESENT WORTH: Benefits @ 12%	Costs @ 12%	CASH FLOW 30%	CASH FLOW 32%
0	0.00	0.00	0.00	0.00	0.00	0.00	0.00	0.00	0.00	0.00	0.00	0.00	0.00	0.00
1	0.00	0.00	0.00	0.00	0.00	0.00	34.57	0.00	34.57	-34.57	0.00	30.87	-26.60	-26.19
2	0.81	0.70	0.02	0.89	0.35	2.77	30.68	0.25	30.93	-28.15	2.21	24.65	-16.66	-16.16
3	3.75	1.65	0.04	2.19	0.83	8.46	23.97	0.59	24.55	-16.09	6.02	17.48	-7.33	-7.00
4	9.64	2.90	0.07	3.93	1.46	18.01	23.77	1.09	24.86	-6.85	11.44	15.80	-2.40	-2.26
5	18.17	4.28	0.10	5.85	2.12	30.52	16.09	1.43	17.52	13.01	17.32	9.94	3.50	3.25
6	26.67	5.22	0.12	7.24	2.56	41.79	0.00	1.68	1.68	40.11	21.17	0.85	8.31	7.58
7	31.93	5.32	0.12	7.60	2.62	47.59	0.00	1.68	1.68	45.91	21.53	0.76	7.32	6.58
8	37.19	5.42	0.12	7.99	2.68	53.40	0.00	1.68	1.68	51.72	21.57	0.68	6.34	5.61
9	42.41	5.52	0.12	8.40	2.75	59.20	0.00	1.68	1.68	57.52	21.35	0.61	5.42	4.73
10	47.62	5.62	0.12	8.84	2.83	65.02	0.00	1.68	1.68	63.34	20.93	0.54	4.59	3.94
11	51.83	5.68	0.12	9.30	2.89	69.81	0.00	1.68	1.68	68.13	20.07	0.48	3.80	3.21
12	56.03	5.74	0.12	9.78	2.96	74.63	0.00	1.68	1.68	72.95	19.16	0.43	3.13	2.61
13	60.22	5.80	0.12	10.30	3.04	79.47	0.00	1.68	1.68	77.79	18.21	0.39	2.57	2.11
14	64.40	5.85	0.12	10.84	3.11	84.32	0.00	1.68	1.68	82.64	17.25	0.34	2.10	1.69
15	68.54	5.90	0.12	11.42	3.20	89.18	0.00	1.68	1.68	87.50	16.29	0.31	1.71	1.36
16	72.68	5.96	0.12	12.03	3.28	94.06	0.00	1.68	1.68	92.38	15.34	0.27	1.39	1.09
17	76.80	6.01	0.12	12.68	3.36	98.96	0.00	1.68	1.68	97.28	14.41	0.24	1.12	0.87
18	80.89	6.05	0.12	13.36	3.44	103.86	0.00	1.68	1.68	102.18	13.51	0.22	0.91	0.69
19	84.98	6.10	0.12	14.09	3.53	108.81	0.00	1.68	1.68	107.13	12.63	0.20	0.73	0.55
20	89.05	6.14	0.12	14.86	3.61	113.77	0.00	1.68	1.68	112.09	11.79	0.17	0.59	0.43
21	89.05	6.09	0.12	14.86	3.70	113.81	0.00	1.68	1.68	112.13	10.53	0.16	0.45	0.33
22	89.05	6.04	0.12	14.86	3.80	113.86	0.00	1.68	1.68	112.18	9.41	0.14	0.35	0.25
23	89.05	5.98	0.12	14.86	3.89	113.89	0.00	1.68	1.68	112.21	8.40	0.12	0.27	0.19
24	89.05	5.93	0.12	14.86	3.99	113.94	0.00	1.68	1.68	112.26	7.51	0.11	0.21	0.14
25	89.05	5.90	0.12	14.86	4.09	114.01	0.00	1.68	1.68	112.33	6.71	0.10	0.16	0.11
26	89.05	5.96	0.12	14.86	4.19	114.17	0.00	1.68	1.68	112.49	6.00	0.09	0.12	0.08
27	89.05	6.02	0.12	14.86	4.29	114.34	0.00	1.68	1.68	112.66	5.36	0.08	0.09	0.06
28	89.05	6.08	0.12	14.86	4.40	114.51	0.00	1.68	1.68	112.83	4.79	0.07	0.07	0.05
29	89.05	6.15	0.12	14.86	4.51	114.68	0.00	1.68	1.68	113.00	4.29	0.06	0.06	0.04
30	89.05	6.21	0.12	14.86	4.63	114.86	0.00	1.68	1.68	113.18	3.83	0.06	0.04	0.03
TOTAL	1814.06	156.22	3.15	320.20	92.08	2385.71	129.08	45.36	174.43	2211.28	369.06	106.22	2.39	-4.03

* Benefits decreased by 10%

NET PRESENT WORTH = Rs. 262.839 million

B/C RATIO = 3.47 : 1

IRR = 30.74 %

677

TABLE 9.45.2

SENSITIVITY ANALYSIS OF GOGERA SYSTEM
ALT II *

(Rs.Million)

YEARS	BENEFITS: Increase in Agri. Prod.	Savings in off-Road Hauling E/o	Canal O&M Savings	Vehicle Operating Cost(VOC) Savings	Time Savings	Total Benefits	COSTS: Capital Cost	O & M Cost	Total Cost	CASH FLOW	PRESENT WORTH: Benefits @ 12%	Costs @ 12%	CASH FLOW 30%	CASH FLOW 32%
0	0.00	0.00	0.00	0.00	0.00	0.00	0.00	0.00	0.00	0.00	0.00	0.00	0.00	0.00
1	0.00	0.00	0.00	0.00	0.00	0.00	38.03	0.00	38.03	-38.03	0.00	33.96	-29.25	-28.81
2	0.90	0.78	0.02	0.99	0.39	3.08	33.74	0.25	33.99	-30.91	2.46	27.10	-18.29	-17.74
3	4.17	1.83	0.05	2.43	0.92	9.40	26.36	0.59	26.95	-17.55	6.69	19.18	-7.99	-7.63
4	10.71	3.23	0.08	4.37	1.62	20.01	26.15	1.09	27.24	-7.23	12.71	17.31	-2.53	-2.38
5	20.19	4.75	0.11	6.51	2.36	33.92	17.70	1.43	19.13	14.79	19.24	10.85	3.98	3.69
6	29.63	5.80	0.13	8.04	2.84	46.44	0.00	1.68	1.68	44.76	23.53	0.85	9.27	8.46
7	35.48	5.91	0.13	8.45	2.91	52.88	0.00	1.68	1.68	51.20	23.92	0.76	8.16	7.33
8	41.32	6.02	0.13	8.88	2.98	59.34	0.00	1.68	1.68	57.66	23.96	0.68	7.07	6.26
9	47.12	6.13	0.13	9.34	3.06	65.78	0.00	1.68	1.68	64.10	23.72	0.61	6.04	5.27
10	52.91	6.24	0.13	9.82	3.14	72.24	0.00	1.68	1.68	70.56	23.26	0.54	5.12	4.39
11	57.59	6.31	0.13	10.33	3.21	77.57	0.00	1.68	1.68	75.89	22.30	0.48	4.23	3.58
12	62.26	6.37	0.13	10.87	3.29	82.93	0.00	1.68	1.68	81.25	21.29	0.43	3.49	2.90
13	66.91	6.44	0.13	11.44	3.38	88.30	0.00	1.68	1.68	86.62	20.24	0.39	2.86	2.35
14	71.55	6.50	0.13	12.05	3.46	93.69	0.00	1.68	1.68	92.01	19.17	0.34	2.34	1.89
15	76.16	6.56	0.13	12.69	3.55	99.09	0.00	1.68	1.68	97.41	18.10	0.31	1.90	1.51
16	80.75	6.62	0.13	13.37	3.64	104.51	0.00	1.68	1.68	102.83	17.05	0.27	1.55	1.21
17	85.33	6.67	0.13	14.09	3.73	109.95	0.00	1.68	1.68	108.27	16.01	0.24	1.25	0.97
18	89.88	6.73	0.13	14.85	3.82	115.40	0.00	1.68	1.68	113.72	15.01	0.22	1.01	0.77
19	94.42	6.78	0.13	15.65	3.92	120.90	0.00	1.68	1.68	119.22	14.04	0.20	0.82	0.61
20	98.94	6.83	0.13	16.51	4.01	126.42	0.00	1.68	1.68	124.74	13.11	0.17	0.66	0.48
21	98.94	6.77	0.13	16.51	4.11	126.46	0.00	1.68	1.68	124.78	11.70	0.16	0.51	0.37
22	98.94	6.71	0.13	16.51	4.22	126.51	0.00	1.68	1.68	124.83	10.46	0.14	0.39	0.28
23	98.94	6.65	0.13	16.51	4.32	126.55	0.00	1.68	1.68	124.87	9.34	0.12	0.30	0.21
24	98.94	6.59	0.13	16.51	4.43	126.60	0.00	1.68	1.68	124.92	8.34	0.11	0.23	0.16
25	98.94	6.56	0.13	16.51	4.54	126.68	0.00	1.68	1.68	125.00	7.45	0.10	0.18	0.12
26	98.94	6.62	0.13	16.51	4.65	126.85	0.00	1.68	1.68	125.17	6.66	0.09	0.14	0.09
27	98.94	6.69	0.13	16.51	4.77	127.04	0.00	1.68	1.68	125.36	5.96	0.08	0.11	0.07
28	98.94	6.76	0.13	16.51	4.89	127.23	0.00	1.68	1.68	125.55	5.33	0.07	0.08	0.05
29	98.94	6.83	0.13	16.51	5.01	127.42	0.00	1.68	1.68	125.74	4.76	0.06	0.06	0.04
30	98.94	6.91	0.13	16.51	5.14	127.63	0.00	1.68	1.68	125.95	4.26	0.06	0.05	0.03
TOTAL	2015.62	173.58	3.51	355.78	102.31	2650.79	141.98	45.36	187.34	2463.45	410.06	115.88	3.71	-3.48

* Costs increased by 10%

NET PRESENT WORTH = Rs. 294.183 million

B/C RATIO = 3.54 : 1

IRR = 31.03 %

1678

TABLE 9.45.3

SENSITIVITY ANALYSIS OF GOGERA SYSTEM
ALT III *

(Rs.Million)

YEARS	BENEFITS: Increase in Agri. Prod.	BENEFITS: Savings in off-Road Hauling Exp.	BENEFITS: Canal O&M Savings	BENEFITS: Vehicle Operating Cost(VOC) Savings	BENEFITS: Time Savings	BENEFITS: Total Benefits	COSTS: Capital Cost	COSTS: O & M Cost	COSTS: Total Cost	CASH FLOW	PRESENT WORTH: Benefits @ 12%	PRESENT WORTH: Costs @ 12%	PRESENT WORTH: CASH FLOW 28%	PRESENT WORTH: CASH FLOW 30%
0	0.00	0.00	0.00	0.00	0.00	0.00	0.00	0.00	0.00	0.00	0.00	0.00	0.00	0.00
1	0.00	0.00	0.00	0.00	0.00	0.00	38.03	0.00	38.03	-38.03	0.00	33.96	-29.71	-29.25
2	0.81	0.70	0.02	0.89	0.35	2.77	33.74	0.25	33.99	-31.22	2.21	27.10	-19.06	-18.47
3	3.75	1.65	0.04	2.19	0.83	8.46	26.36	0.59	26.95	-18.49	6.02	19.18	-8.82	-8.42
4	9.64	2.90	0.07	3.93	1.46	18.01	26.15	1.09	27.24	-9.23	11.44	17.31	-3.44	-3.23
5	18.17	4.28	0.10	5.85	2.12	30.52	17.70	1.43	19.13	11.40	17.32	10.85	3.32	3.07
6	26.67	5.22	0.12	7.24	2.56	41.79	0.00	1.68	1.68	40.11	21.17	0.85	9.12	8.31
7	31.93	5.32	0.12	7.60	2.62	47.59	0.00	1.68	1.68	45.91	21.53	0.76	8.16	7.32
8	37.19	5.42	0.12	7.99	2.68	53.40	0.00	1.68	1.68	51.72	21.57	0.68	7.18	6.34
9	42.41	5.52	0.12	8.40	2.75	59.20	0.00	1.68	1.68	57.52	21.35	0.61	6.24	5.42
10	47.62	5.62	0.12	8.84	2.83	65.02	0.00	1.68	1.68	63.34	20.93	0.54	5.36	4.59
11	51.83	5.68	0.12	9.30	2.89	69.81	0.00	1.68	1.68	68.13	20.07	0.48	4.51	3.80
12	56.03	5.74	0.12	9.78	2.96	74.63	0.00	1.68	1.68	72.95	19.16	0.43	3.77	3.13
13	60.22	5.80	0.12	10.30	3.04	79.47	0.00	1.68	1.68	77.79	18.21	0.39	3.14	2.57
14	64.40	5.85	0.12	10.84	3.11	84.32	0.00	1.68	1.68	82.64	17.25	0.34	2.61	2.10
15	68.54	5.90	0.12	11.42	3.20	89.18	0.00	1.68	1.68	87.50	16.29	0.31	2.16	1.71
16	72.68	5.96	0.12	12.03	3.28	94.06	0.00	1.68	1.68	92.38	15.34	0.27	1.78	1.39
17	76.80	6.01	0.12	12.68	3.36	98.96	0.00	1.68	1.68	97.28	14.41	0.24	1.46	1.12
18	80.89	6.05	0.12	13.36	3.44	103.86	0.00	1.68	1.68	102.18	13.51	0.22	1.20	0.91
19	84.98	6.10	0.12	14.09	3.53	108.81	0.00	1.68	1.68	107.13	12.63	0.20	0.98	0.73
20	89.05	6.14	0.12	14.86	3.61	113.77	0.00	1.68	1.68	112.09	11.79	0.17	0.80	0.59
21	89.05	6.09	0.12	14.86	3.70	113.81	0.00	1.68	1.68	112.13	10.53	0.16	0.63	0.45
22	89.05	6.04	0.12	14.86	3.80	113.86	0.00	1.68	1.68	112.18	9.41	0.14	0.49	0.35
23	89.05	5.98	0.12	14.86	3.89	113.89	0.00	1.68	1.68	112.21	8.40	0.12	0.38	0.27
24	89.05	5.93	0.12	14.86	3.99	113.94	0.00	1.68	1.68	112.26	7.51	0.11	0.30	0.21
25	89.05	5.90	0.12	14.86	4.09	114.01	0.00	1.68	1.68	112.33	6.71	0.10	0.23	0.16
26	89.05	5.96	0.12	14.86	4.19	114.17	0.00	1.68	1.68	112.49	6.00	0.09	0.18	0.12
27	89.05	6.02	0.12	14.86	4.29	114.34	0.00	1.68	1.68	112.66	5.36	0.08	0.14	0.09
28	89.05	6.08	0.12	14.86	4.40	114.51	0.00	1.68	1.68	112.83	4.79	0.07	0.11	0.07
29	89.05	6.15	0.12	14.86	4.51	114.68	0.00	1.68	1.68	113.00	4.29	0.06	0.09	0.06
30	89.05	6.21	0.12	14.86	4.63	114.86	0.00	1.68	1.68	113.18	3.83	0.06	0.07	0.04
TOTAL	1814.06	156.22	3.15	320.20	92.08	2385.71	141.98	45.36	187.34	2198.37	369.06	115.88	3.40	-4.44

* Benefits decreased & Cost increased by 10%

NET PRESENT WORTH = Rs. 253.177 million

B/C RATIO = 3.18 : 1

IRR = 28.87 %

679

TABLE 9.45.4

SENSITIVITY ANALYSIS OF GOGERA SYSTEM
ALT IV *

(Rs.Million)

YEARS	BENEFITS: Increase in Agri. Prod.	BENEFITS: Savings in off-Road Hauling Exp.	BENEFITS: Canal D&M Savings	BENEFITS: Vehicle Operating Cost(VOC) Savings	BENEFITS: Time Savings	BENEFITS: Total Benefits	COSTS: Capital Cost	COSTS: O & M Cost	COSTS: Total Cost	CASH FLOW	PRESENT WORTH: Benefits @ 12%	PRESENT WORTH: Costs @ 12%	PRESENT WORTH: CASH FLOW 12%	PRESENT WORTH: CASH FLOW 14%
0	0.00	0.00	0.00	0.00	0.00	0.00	0.00	0.00	0.00	0.00	0.00	0.00	0.00	0.00
1	0.00	0.00	0.00	0.00	0.00	0.00	34.57	0.00	34.57	-34.57	0.00	30.87	-30.87	-30.33
2	0.23	0.20	0.01	0.26	0.10	0.80	30.68	0.25	30.93	-30.13	0.64	24.65	-24.02	-23.18
3	1.08	0.48	0.01	0.63	0.24	2.44	23.97	0.59	24.55	-22.11	1.74	17.48	-15.74	-14.92
4	2.78	0.84	0.02	1.14	0.42	5.20	23.77	1.09	24.86	-19.66	3.31	15.80	-12.49	-11.64
5	5.25	1.24	0.03	1.69	0.61	8.82	16.09	1.43	17.52	-8.70	5.00	9.94	-4.94	-4.52
6	7.70	1.51	0.03	2.09	0.74	12.07	0.00	1.68	1.68	10.39	6.12	0.85	5.27	4.74
7	9.22	1.54	0.03	2.20	0.76	13.75	0.00	1.68	1.68	12.07	6.22	0.76	5.46	4.82
8	10.74	1.57	0.03	2.31	0.77	15.43	0.00	1.68	1.68	13.75	6.23	0.68	5.55	4.82
9	12.25	1.59	0.03	2.43	0.80	17.10	0.00	1.68	1.68	15.42	6.17	0.61	5.56	4.74
10	13.76	1.62	0.03	2.55	0.82	18.78	0.00	1.68	1.68	17.10	6.05	0.54	5.51	4.61
11	14.97	1.64	0.03	2.69	0.83	20.17	0.00	1.68	1.68	18.49	5.80	0.48	5.31	4.37
12	16.19	1.66	0.03	2.83	0.86	21.56	0.00	1.68	1.68	19.88	5.53	0.43	5.10	4.13
13	17.40	1.67	0.03	2.98	0.88	22.96	0.00	1.68	1.68	21.28	5.26	0.39	4.88	3.87
14	18.60	1.69	0.03	3.13	0.90	24.36	0.00	1.68	1.68	22.68	4.98	0.34	4.64	3.62
15	19.80	1.71	0.03	3.30	0.92	25.76	0.00	1.68	1.68	24.08	4.71	0.31	4.40	3.37
16	21.00	1.72	0.03	3.48	0.95	27.17	0.00	1.68	1.68	25.49	4.43	0.27	4.16	3.13
17	22.19	1.74	0.03	3.66	0.97	28.59	0.00	1.68	1.68	26.91	4.16	0.24	3.92	2.90
18	23.37	1.75	0.03	3.86	0.99	30.01	0.00	1.68	1.68	28.33	3.90	0.22	3.68	2.68
19	24.55	1.76	0.03	4.07	1.02	31.43	0.00	1.68	1.68	29.75	3.65	0.20	3.45	2.47
20	25.72	1.77	0.03	4.29	1.04	32.87	0.00	1.68	1.68	31.19	3.41	0.17	3.23	2.27
21	25.72	1.76	0.03	4.29	1.07	32.88	0.00	1.68	1.68	31.20	3.04	0.16	2.89	1.99
22	25.72	1.74	0.03	4.29	1.10	32.89	0.00	1.68	1.68	31.21	2.72	0.14	2.58	1.75
23	25.72	1.73	0.03	4.29	1.12	32.90	0.00	1.68	1.68	31.22	2.43	0.12	2.30	1.53
24	25.72	1.71	0.03	4.29	1.15	32.91	0.00	1.68	1.68	31.23	2.17	0.11	2.06	1.35
25	25.72	1.71	0.03	4.29	1.18	32.94	0.00	1.68	1.68	31.26	1.94	0.10	1.84	1.18
26	25.72	1.72	0.03	4.29	1.21	32.98	0.00	1.68	1.68	31.30	1.73	0.09	1.64	1.04
27	25.72	1.74	0.03	4.29	1.24	33.03	0.00	1.68	1.68	31.35	1.55	0.08	1.47	0.91
28	25.72	1.76	0.03	4.29	1.27	33.08	0.00	1.68	1.68	31.40	1.39	0.07	1.31	0.80
29	25.72	1.78	0.03	4.29	1.30	33.13	0.00	1.68	1.68	31.45	1.24	0.06	1.18	0.70
30	25.72	1.80	0.03	4.29	1.34	33.18	0.00	1.68	1.68	31.50	1.11	0.06	1.05	0.62
TOTAL	524.06	45.13	0.91	92.50	26.60	689.21	129.08	45.36	174.43	514.77	106.62	106.22	0.40	-16.17

* Benefits decreased by 74%

NET PRESENT WORTH = Rs0.39914 million

B/C RATIO = 1.00 : 1

IRR = 12.05 %

680

TABLE 9.45.5

SENSITIVITY ANALYSIS OF GOGERA SYSTEM
ALT V *

(Rs.Million)

YEARS	BENEFITS: Increase in Agri. Prod.	BENEFITS: Savings in off-Road Hauling Exp.	BENEFITS: Canal O&M Savings	BENEFITS: Vehicle Operating Cost(VOC) Savings	BENEFITS: Time Savings	BENEFITS: Total Benefits	COSTS: Capital Cost	COSTS: O & M Cost	COSTS: Total Cost	CASH FLOW	PRESENT WORTH: Benefits @ 12%	PRESENT WORTH: Costs @ 12%	PRESENT WORTH: CASH FLOW 12%	PRESENT WORTH: CASH FLOW 14%
0	0.00	0.00	0.00	0.00	0.00	0.00	0.00	0.00	0.00	0.00	0.00	0.00	0.00	0.00
1	0.00	0.00	0.00	0.00	0.00	0.00	138.30	0.00	138.30	-138.30	0.00	123.48	-123.48	-121.31
2	0.[illegible]0	0.78	0.02	0.99	0.39	3.08	122.70	0.25	122.95	-119.87	2.46	98.02	-95.56	-92.24
3	4.17	1.83	0.05	2.43	0.92	9.40	95.86	0.59	96.45	-87.05	6.69	68.65	-61.96	-58.76
4	10.71	3.23	0.08	4.37	1.62	20.01	95.09	1.09	96.18	-76.17	12.71	61.12	-48.41	-45.10
5	20.19	4.75	0.11	6.51	2.36	33.92	64.36	1.43	65.79	-31.88	19.24	37.33	-18.09	-16.56
6	29.63	5.80	0.13	8.04	2.84	46.44	0.00	1.68	1.68	44.76	23.53	0.85	22.67	20.39
7	35.48	5.91	0.13	8.45	2.91	52.88	0.00	1.68	1.68	51.20	23.92	0.76	23.16	20.46
8	41.32	6.02	0.13	8.88	2.98	59.34	0.00	1.68	1.68	57.66	23.96	0.68	23.29	20.21
9	47.12	6.13	0.13	9.34	3.06	65.78	0.00	1.68	1.68	64.10	23.72	0.61	23.12	19.71
10	52.91	6.24	0.13	9.82	3.14	72.24	0.00	1.68	1.68	70.56	23.26	0.54	22.72	19.03
11	57.59	6.31	0.13	10.33	3.21	77.57	0.00	1.68	1.68	75.89	22.30	0.48	21.82	17.96
12	62.26	6.37	0.13	10.87	3.29	82.93	0.00	1.68	1.68	81.25	21.29	0.43	20.85	16.86
13	66.91	6.44	0.13	11.44	3.38	88.30	0.00	1.68	1.68	86.62	20.24	0.39	19.85	15.77
14	71.55	6.50	0.13	12.05	3.46	93.69	0.00	1.68	1.68	92.01	19.17	0.34	18.83	14.69
15	76.16	6.56	0.13	12.69	3.55	99.09	0.00	1.68	1.68	97.41	18.10	0.31	17.80	13.65
16	80.75	6.62	0.13	13.37	3.64	104.51	0.00	1.68	1.68	102.83	17.05	0.27	16.77	12.64
17	85.33	6.67	0.13	14.09	3.73	109.95	0.00	1.68	1.68	108.27	16.01	0.24	15.77	11.67
18	89.88	6.73	0.13	14.85	3.82	115.40	0.00	1.68	1.68	113.72	15.01	0.22	14.79	10.75
19	94.42	6.78	0.13	15.65	3.92	120.90	0.00	1.68	1.68	119.22	14.04	0.20	13.84	9.89
20	98.94	6.83	0.13	16.51	4.01	126.42	0.00	1.68	1.68	124.74	13.11	0.17	12.93	9.08
21	98.94	6.77	0.13	16.51	4.11	126.46	0.00	1.68	1.68	124.78	11.70	0.16	11.55	7.96
22	98.94	6.71	0.13	16.51	4.22	126.51	0.00	1.68	1.68	124.83	10.46	0.14	10.32	6.99
23	98.94	6.65	0.13	16.51	4.32	126.55	0.00	1.68	1.68	124.87	9.34	0.12	9.21	6.13
24	98.94	6.59	0.13	16.51	4.43	126.60	0.00	1.68	1.68	124.92	8.34	0.11	8.23	5.38
25	98.94	6.56	0.13	16.51	4.54	126.68	0.00	1.68	1.68	125.00	7.45	0.10	7.35	4.72
26	98.94	6.62	0.13	16.51	4.65	126.85	0.00	1.68	1.68	125.17	6.66	0.09	6.57	4.15
27	98.94	6.69	0.13	16.51	4.77	127.04	0.00	1.68	1.68	125.36	5.96	0.08	5.88	3.65
28	98.94	6.76	0.13	16.51	4.89	127.23	0.00	1.68	1.68	125.55	5.33	0.07	5.26	3.20
29	98.94	6.83	0.13	16.51	5.01	127.42	0.00	1.68	1.68	125.74	4.76	0.06	4.70	2.81
30	98.94	6.91	0.13	16.51	5.14	127.63	0.00	1.68	1.68	125.95	4.26	0.06	4.20	2.47
TOTAL	2015.62	173.58	3.51	355.78	102.31	2650.79	516.31	45.36	561.66	2089.13	410.06	396.08	13.99	-53.72

* Costs increased by 300%

NET PRESENT WORTH = Rs13.9875 million

B/C RATIO = 1.04 : 1

IRR = 12.41 %

681

TABLE 9.46.1

SENSITIVITY ANALYSIS OF DEPALPUR SYSTEM
ALT I *

(Rs.Million)

YEARS	BENEFITS: Increase in Agri. Prod.	Savings in off-Road Hauling Exp.	Canal O&M Savings	Vehicle Operating Cost(VOC) Savings	Time Savings	Total Benefits	COSTS: Capital Cost	O & M Cost	Total Cost	CASH FLOW	PRESENT WORTH: Benefits @ 12%	Costs @ 12%	CASH FLOW 14%	CASH FLOW 16%
0	0.00	0.00	0.00	0.00	0.00	0.00	0.00	0.00	0.00	0.00	0.00	0.00	0.00	0.00
1	0.00	0.00	0.00	0.00	0.00	0.00	92.66	0.00	92.66	-92.66	0.00	82.73	-81.28	-79.88
2	0.48	0.98	0.05	2.63	0.50	4.65	82.21	0.65	82.87	-78.22	3.70	66.06	-60.19	-58.13
3	2.21	2.30	0.12	6.45	1.22	12.29	64.23	1.53	65.75	-53.46	8.75	46.80	-36.08	-34.25
4	5.69	3.99	0.20	11.59	2.15	23.62	63.71	2.61	66.32	-42.70	15.01	42.15	-25.28	-23.58
5	10.75	5.76	0.29	17.23	3.14	37.17	43.13	3.70	46.83	-9.66	21.09	26.57	-5.02	-4.60
6	15.80	6.90	0.34	21.27	3.82	48.13	0.00	4.36	4.36	43.77	24.38	2.21	19.94	17.97
7	18.95	6.97	0.34	22.33	3.93	52.52	0.00	4.36	4.36	48.16	23.76	1.97	19.25	17.04
8	22.10	7.04	0.34	23.44	4.05	56.97	0.00	4.36	4.36	52.61	23.01	1.76	18.44	16.05
9	25.25	7.10	0.34	24.62	4.18	61.48	0.00	4.36	4.36	57.12	22.17	1.57	17.57	15.02
10	28.40	7.16	0.34	25.86	4.31	66.06	0.00	4.36	4.36	61.71	21.27	1.40	16.65	13.9
11	31.57	7.22	0.34	27.16	4.45	70.74	0.00	4.36	4.36	66.38	20.34	1.25	15.71	12.9
12	34.76	7.27	0.34	28.54	4.58	75.49	0.00	4.36	4.36	71.13	19.38	1.12	14.76	11.98
13	37.94	7.32	0.34	29.99	4.73	80.32	0.00	4.36	4.36	75.96	18.41	1.00	13.83	11.03
14	41.11	7.37	0.34	31.53	4.87	85.22	0.00	4.36	4.36	80.87	17.44	0.89	12.92	10.12
15	44.29	7.42	0.34	33.15	5.02	90.22	0.00	4.36	4.36	85.86	16.48	0.80	12.03	9.27
16	47.47	7.46	0.34	34.86	5.18	95.31	0.00	4.36	4.36	90.95	15.55	0.71	11.18	8.46
17	50.64	7.50	0.34	36.67	5.34	100.49	0.00	4.36	4.36	96.14	14.64	0.63	10.36	7.71
18	53.81	7.54	0.34	38.58	5.50	105.77	0.00	4.36	4.36	101.42	13.75	0.57	9.59	7.01
19	56.98	7.58	0.34	40.60	5.67	111.17	0.00	4.36	4.36	106.81	12.91	0.51	8.86	6.37
20	60.15	7.61	0.34	42.74	5.85	116.69	0.00	4.36	4.36	112.33	12.10	0.45	8.17	5.77
21	60.15	7.50	0.34	42.74	6.03	116.76	0.00	4.36	4.36	112.40	10.81	0.40	7.17	4.98
22	60.15	7.39	0.34	42.74	6.22	116.84	0.00	4.36	4.36	112.48	9.66	0.36	6.30	4.30
23	60.15	7.28	0.34	42.74	6.41	116.92	0.00	4.36	4.36	112.56	8.63	0.32	5.53	3.71
24	60.15	7.17	0.34	42.74	6.61	117.00	0.00	4.36	4.36	112.64	7.71	0.29	4.85	3.20
25	60.15	7.05	0.34	42.74	6.81	117.09	0.00	4.36	4.36	112.73	6.89	0.26	4.26	2.76
26	60.15	6.93	0.34	42.74	7.02	117.17	0.00	4.36	4.36	112.82	6.15	0.23	3.74	2.38
27	60.15	6.80	0.34	42.74	7.24	117.26	0.00	4.36	4.36	112.91	5.50	0.20	3.28	2.05
28	60.15	6.67	0.34	42.74	7.46	117.36	0.00	4.36	4.36	113.00	4.91	0.18	2.88	1.77
29	60.15	6.53	0.34	42.74	7.70	117.46	0.00	4.36	4.36	113.10	4.39	0.16	2.53	1.53
30	60.15	6.40	0.34	42.74	7.94	117.56	0.00	4.36	4.36	113.21	3.92	0.15	2.22	1.32
TOTAL	1189.78	192.20	9.17	926.67	147.90	2465.72	345.93	117.40	463.33	2002.39	392.69	283.70	44.18	-1.69

* Benefits decreased by 10%

NET PRESENT WORTH = Rs. 108.994 million

B/C RATIO = 1.38 : 1

IRR = 15.93 %

682

TABLE 9.46.2

SENSITIVITY ANALYSIS OF DEPALPUR SYSTEM
ALT II *

(Rs.Million)

YEARS	BENEFITS: Increase in Agri. Prod.	Savings in off-Road Hauling Exp.	Canal O&M Savings	Vehicle Operating Cost(VOC) Savings	Time Savings	Total Benefits	COSTS: Capital Cost	O & M Cost	Total Cost	CASH FLOW	PRESENT WORTH: Benefits @ 12%	Costs @ 12%	CASH FLOW 16%	CASH FLOW 18%
0	0.00	0.00	0.00	0.00	0.00	0.00	0.00	0.00	0.00	0.00	0.00	0.00	0.00	0.00
1	0.00	0.00	0.00	0.00	0.00	0.00	101.92	0.00	101.92	-101.92	0.00	91.00	-87.87	-86.38
2	0.53	1.09	0.06	2.93	0.56	5.16	90.43	0.65	91.09	-85.92	4.12	72.61	-63.85	-61.71
3	2.46	2.55	0.13	7.16	1.35	13.66	70.65	1.53	72.17	-58.52	9.72	51.37	-37.49	-35.62
4	6.32	4.43	0.23	12.88	2.39	26.25	70.08	2.61	72.69	-46.44	16.68	46.20	-25.65	-23.96
5	11.94	6.40	0.32	19.15	3.49	41.30	47.44	3.70	51.14	-9.84	23.43	29.02	-4.69	-4.30
6	17.55	7.67	0.38	23.64	4.24	53.48	0.00	4.36	4.36	49.12	27.09	2.21	20.16	18.20
7	21.05	7.75	0.38	24.81	4.37	58.36	0.00	4.36	4.36	54.00	26.40	1.97	19.11	16.95
8	24.55	7.82	0.38	26.05	4.50	63.30	0.00	4.36	4.36	58.94	25.56	1.76	17.98	15.68
9	28.05	7.89	0.38	27.35	4.64	68.31	0.00	4.36	4.36	63.95	24.63	1.57	16.82	14.42
10	31.55	7.96	0.38	28.73	4.79	73.40	0.00	4.36	4.36	69.05	23.63	1.40	15.65	13.19
11	35.08	8.02	0.38	30.18	4.94	78.60	0.00	4.36	4.36	74.24	22.59	1.25	14.51	12.02
12	38.62	8.08	0.38	31.71	5.09	83.88	0.00	4.36	4.36	79.52	21.53	1.12	13.40	10.91
13	42.15	8.14	0.38	33.33	5.25	89.24	0.00	4.36	4.36	84.88	20.45	1.00	12.33	9.87
14	45.68	8.19	0.38	35.03	5.41	94.69	0.00	4.36	4.36	90.34	19.38	0.89	11.31	8.90
15	49.21	8.24	0.38	36.84	5.58	100.24	0.00	4.36	4.36	95.89	18.31	0.80	10.35	8.01
16	52.74	8.29	0.38	38.74	5.75	105.90	0.00	4.36	4.36	101.54	17.27	0.71	9.45	7.19
17	56.27	8.34	0.38	40.75	5.93	111.66	0.00	4.36	4.36	107.31	16.26	0.63	8.61	6.44
18	59.79	8.38	0.38	42.87	6.11	117.53	0.00	4.36	4.36	113.17	15.28	0.57	7.83	5.75
19	63.31	8.42	0.38	45.12	6.30	123.52	0.00	4.36	4.36	119.17	14.34	0.51	7.10	5.13
20	66.83	8.45	0.38	47.49	6.50	129.65	0.00	4.36	4.36	125.29	13.44	0.45	6.44	4.57
21	66.83	8.34	0.38	47.49	6.70	129.73	0.00	4.36	4.36	125.38	12.01	0.40	5.55	3.88
22	66.83	8.22	0.38	47.49	6.91	129.82	0.00	4.36	4.36	125.47	10.73	0.36	4.79	3.29
23	66.83	8.09	0.38	47.49	7.12	129.91	0.00	4.36	4.36	125.55	9.59	0.32	4.13	2.79
24	66.83	7.96	0.38	47.49	7.34	130.00	0.00	4.36	4.36	125.64	8.56	0.29	3.57	2.37
25	66.83	7.83	0.38	47.49	7.57	130.10	0.00	4.36	4.36	125.74	7.65	0.26	3.08	2.01
26	66.83	7.70	0.38	47.49	7.80	130.19	0.00	4.36	4.36	125.84	6.84	0.23	2.65	1.70
27	66.83	7.56	0.38	47.49	8.04	130.29	0.00	4.36	4.36	125.94	6.11	0.20	2.29	1.44
28	66.83	7.41	0.38	47.49	8.29	130.40	0.00	4.36	4.36	126.04	5.46	0.18	1.98	1.22
29	66.83	7.26	0.38	47.49	8.55	130.51	0.00	4.36	4.36	126.15	4.88	0.16	1.70	1.04
30	66.83	7.11	0.38	47.49	8.82	130.63	0.00	4.36	4.36	126.27	4.36	0.15	1.47	0.88
TOTAL	1321.98	213.56	10.19	1029.63	164.33	2739.69	380.53	117.40	497.92	2241.76	436.33	309.59	2.69	-34.11

* Costs increased by 10%

NET PRESENT WORTH = Rs. 126.732 million

B/C RATIO = 1.41 : 1

IRR = 16.15 %

683

TABLE 9.46.3

SENSITIVITY ANALYSIS OF DEPALPUR SYSTEM
ALT III *

(Rs.Million)

YEARS	BENEFITS: Increase in Agri. Prod.	Savings in off-Road Hauling Exp.	Canal O&M Savings	Vehicle Operating Cost(VOC) Savings	Time Savings	Total Benefits	COSTS: Capital Cost	O & M Cost	Total Cost	CASH FLOW	PRESENT WORTH: Benefits @ 12%	Costs @ 12%	CASH FLOW 14%	CASH FLOW 16%
0	0.00	0.00	0.00	0.00	0.00	0.00	0.00	0.00	0.00	0.00	0.00	0.00	0.00	0.00
1	0.00	0.00	0.00	0.00	0.00	0.00	101.92	0.00	101.92	-101.92	0.00	91.00	-89.41	-87.87
2	0.48	0.98	0.05	2.63	0.50	4.65	90.43	0.65	91.09	-86.44	3.70	72.61	-66.51	-64.24
3	2.21	2.30	0.12	6.45	1.22	12.29	70.65	1.53	72.17	-59.88	8.75	51.37	-40.42	-38.36
4	5.69	3.99	0.20	11.59	2.15	23.62	70.08	2.61	72.69	-49.07	15.01	46.20	-29.05	-27.10
5	10.75	5.76	0.29	17.23	3.14	37.17	47.44	3.70	51.14	-13.97	21.09	29.02	-7.26	-6.65
6	15.80	6.90	0.34	21.27	3.82	48.13	0.00	4.36	4.36	43.77	24.38	2.21	19.94	17.97
7	18.95	6.97	0.34	22.33	3.93	52.52	0.00	4.36	4.36	48.16	23.76	1.97	19.25	17.04
8	22.10	7.04	0.34	23.44	4.05	56.97	0.00	4.36	4.36	52.61	23.01	1.76	18.44	16.05
9	25.25	7.10	0.34	24.62	4.18	61.48	0.00	4.36	4.36	57.12	22.17	1.57	17.57	15.02
10	28.40	7.16	0.34	25.86	4.31	66.06	0.00	4.36	4.36	61.71	21.27	1.40	16.65	13.99
11	31.57	7.22	0.34	27.16	4.45	70.74	0.00	4.36	4.36	66.38	20.34	1.25	15.71	12.97
12	34.76	7.27	0.34	28.54	4.58	75.49	0.00	4.36	4.36	71.13	19.38	1.12	14.76	11.98
13	37.94	7.32	0.34	29.99	4.73	80.32	0.00	4.36	4.36	75.96	18.41	1.00	13.83	11.03
14	41.11	7.37	0.34	31.53	4.87	85.22	0.00	4.36	4.36	80.87	17.44	0.89	12.92	10.12
15	44.29	7.42	0.34	33.15	5.02	90.22	0.00	4.36	4.36	85.86	16.48	0.80	12.03	9.27
16	47.47	7.46	0.34	34.86	5.18	95.31	0.00	4.36	4.36	90.95	15.55	0.71	11.18	8.46
17	50.64	7.50	0.34	36.67	5.34	100.49	0.00	4.36	4.36	96.14	14.64	0.63	10.36	7.71
18	53.81	7.54	0.34	38.58	5.50	105.77	0.00	4.36	4.36	101.42	13.75	0.57	9.59	7.01
19	56.98	7.58	0.34	40.60	5.67	111.17	0.00	4.36	4.36	106.81	12.91	0.51	8.86	6.37
20	60.15	7.61	0.34	42.74	5.85	116.69	0.00	4.36	4.36	112.33	12.10	0.45	8.17	5.77
21	60.15	7.50	0.34	42.74	6.03	116.76	0.00	4.36	4.36	112.40	10.81	0.40	7.17	4.98
22	60.15	7.39	0.34	42.74	6.22	116.84	0.00	4.36	4.36	112.48	9.66	0.36	6.30	4.30
23	60.15	7.28	0.34	42.74	6.41	116.92	0.00	4.36	4.36	112.56	8.63	0.32	5.53	3.71
24	60.15	7.17	0.34	42.74	6.61	117.00	0.00	4.36	4.36	112.64	7.71	0.29	4.85	3.20
25	60.15	7.05	0.34	42.74	6.81	117.09	0.00	4.36	4.36	112.73	6.89	0.26	4.26	2.36
26	60.15	6.93	0.34	42.74	7.02	117.17	0.00	4.36	4.36	112.82	6.15	0.23	3.74	2.38
27	60.15	6.80	0.34	42.74	7.24	117.26	0.00	4.36	4.36	112.91	5.50	0.20	3.28	2.05
28	60.15	6.67	0.34	42.74	7.46	117.36	0.00	4.36	4.36	113.00	4.91	0.18	2.88	1.77
29	60.15	6.53	0.34	42.74	7.70	117.46	0.00	4.36	4.36	113.10	4.39	0.16	2.53	1.53
30	60.15	6.40	0.34	42.74	7.94	117.56	0.00	4.36	4.36	113.21	3.92	0.15	2.22	1.32
TOTAL	1189.78	192.20	9.17	926.67	147.90	2465.72	380.53	117.40	497.92	1967.80	392.69	309.59	19.37	-25.47

* Benefits decreased & Cost increased by 10%

NET PRESENT WORTH = Rs. 83.0995 million

B/C RATIO = 1.27 : 1

IRR = 14.86 %

684

TABLE 9.46.4

SENSITIVITY ANALYSIS OF DEPALPUR SYSTEM
ALT IV *

(Rs.Million)

YEARS	BENEFITS: Increase in Agri. Prod.	BENEFITS: Savings in off-Road Hauling Exp.	BENEFITS: Canal O&M Savings	BENEFITS: Vehicle Operating Cost (VOC) Savings	BENEFITS: Time Savings	BENEFITS: Total Benefits	COSTS: Capital Cost	COSTS: O & M Cost	COSTS: Total Cost	CASH FLOW	PRESENT WORTH: Benefits @ 12%	PRESENT WORTH: Costs @ 12%	PRESENT WORTH: CASH FLOW 12%	PRESENT WORTH: CASH FLOW 14%
0	0.00	0.00	0.00	0.00	0.00	0.00	0.00	0.00	0.00	0.00	0.00	0.00	0.00	0.00
1	0.00	0.00	0.00	0.00	0.00	0.00	92.66	0.00	92.66	-92.66	0.00	82.73	-82.73	-81.28
2	0.35	0.72	0.04	1.93	0.37	3.41	82.21	0.65	82.87	-79.46	2.72	66.06	-63.34	-61.14
3	1.62	1.68	0.09	4.73	0.89	9.01	64.23	1.53	65.75	-56.74	6.42	46.80	-40.39	-38.30
4	4.17	2.93	0.15	8.50	1.58	17.32	63.71	2.61	66.32	-49.00	11.01	42.15	-31.14	-29.01
5	7.88	4.22	0.21	12.64	2.30	27.26	43.13	3.70	46.83	-19.57	15.47	26.57	-11.11	-10.17
6	11.58	5.06	0.25	15.60	2.80	35.29	0.00	4.36	4.36	30.94	17.88	2.21	15.67	14.10
7	13.89	5.11	0.25	16.38	2.88	38.51	0.00	4.36	4.36	34.15	17.42	1.97	15.45	13.65
8	16.20	5.16	0.25	17.19	2.97	41.77	0.00	4.36	4.36	37.42	16.87	1.76	15.11	13.12
9	18.51	5.21	0.25	18.05	3.06	45.08	0.00	4.36	4.36	40.73	16.26	1.57	14.69	12.52
10	20.82	5.25	0.25	18.96	3.16	48.45	0.00	4.36	4.36	44.09	15.60	1.40	14.20	11.89
11	23.15	5.29	0.25	19.92	3.26	51.87	0.00	4.36	4.36	47.52	14.91	1.25	13.66	11.24
12	25.49	5.33	0.25	20.93	3.36	55.36	0.00	4.36	4.36	51.00	14.21	1.12	13.09	10.59
13	27.82	5.37	0.25	22.00	3.47	58.90	0.00	4.36	4.36	54.54	13.50	1.00	12.50	9.93
14	30.15	5.40	0.25	23.12	3.57	62.50	0.00	4.36	4.36	58.14	12.79	0.89	11.90	9.29
15	32.48	5.44	0.25	24.31	3.68	66.16	0.00	4.36	4.36	61.81	12.09	0.80	11.29	8.66
16	34.81	5.47	0.25	25.57	3.80	69.89	0.00	4.36	4.36	65.53	11.40	0.71	10.69	8.05
17	37.14	5.50	0.25	26.89	3.91	73.70	0.00	4.36	4.36	69.34	10.73	0.63	10.10	7.47
18	39.46	5.53	0.25	28.29	4.03	77.57	0.00	4.36	4.36	73.21	10.09	0.57	9.52	6.92
19	41.78	5.56	0.25	29.78	4.16	81.52	0.00	4.36	4.36	77.17	9.47	0.51	8.96	6.40
20	44.11	5.58	0.25	31.34	4.29	85.57	0.00	4.36	4.36	81.21	8.87	0.45	8.42	5.91
21	44.11	5.50	0.25	31.34	4.42	85.62	0.00	4.36	4.36	81.27	7.93	0.40	7.52	5.19
22	44.11	5.42	0.25	31.34	4.56	85.68	0.00	4.36	4.36	81.33	7.08	0.36	6.72	4.55
23	44.11	5.34	0.25	31.34	4.70	85.74	0.00	4.36	4.36	81.38	6.33	0.32	6.01	4.00
24	44.11	5.26	0.25	31.34	4.84	85.80	0.00	4.36	4.36	81.44	5.65	0.29	5.37	3.51
25	44.11	5.17	0.25	31.34	5.00	85.86	0.00	4.36	4.36	81.51	5.05	0.26	4.79	3.08
26	44.11	5.08	0.25	31.34	5.15	85.93	0.00	4.36	4.36	81.57	4.51	0.23	4.28	2.70
27	44.11	4.99	0.25	31.34	5.31	85.99	0.00	4.36	4.36	81.64	4.03	0.20	3.83	2.37
28	44.11	4.89	0.25	31.34	5.47	86.06	0.00	4.36	4.36	81.71	3.60	0.18	3.42	2.08
29	44.11	4.79	0.25	31.34	5.64	86.14	0.00	4.36	4.36	81.78	3.22	0.16	3.06	1.83
30	44.11	4.69	0.25	31.34	5.82	86.21	0.00	4.36	4.36	81.86	2.88	0.15	2.73	1.61
TOTAL	872.51	140.95	6.72	679.56	108.46	1808.19	345.93	117.40	463.33	1344.86	287.97	283.70	4.28	-39.22

* Benefits decreased by 34%

NET PRESENT WORTH = Rs4.27582 million

B/C RATIO = 1.02 : 1

IRR = 12.20 %

685

TABLE 9.46.5

SENSITIVITY ANALYSIS OF DEPALPUR SYSTEM
ALT V *

(Rs.Million)

YEARS	BENEFITS: Increase in Agri. Prod.	Savings in off-Road Hauling Exp.	Canal O&M Savings	Vehicle Operating Cost (VOC) Savings	Time Savings	Total Benefits	COSTS: Capital Cost	O & M Cost	Total Cost	CASH FLOW	PRESENT WORTH: Benefits @ 12%	Costs @ 12%	CASH FLOW 12%	CASH FLOW 14%
0	0.00	0.00	0.00	0.00	0.00	0.00	0.00	0.00	0.00	0.00	0.00	0.00	0.00	0.00
1	0.00	0.00	0.00	0.00	0.00	0.00	143.62	0.00	143.62	-143.62	0.00	128.23	-128.23	-125.98
2	0.53	1.09	0.06	2.93	0.56	5.16	127.43	0.65	128.08	-122.92	4.12	102.11	-97.99	-94.58
3	2.46	2.55	0.13	7.16	1.35	13.66	99.55	1.53	101.08	-87.42	9.72	71.94	-62.22	-59.01
4	6.32	4.43	0.23	12.88	2.39	26.25	98.75	2.61	101.36	-75.11	16.68	64.42	-47.74	-44.47
5	11.94	6.40	0.32	19.15	3.49	41.30	66.85	3.70	70.55	-29.25	23.43	40.03	-16.60	-15.19
6	17.55	7.67	0.38	23.64	4.24	53.48	0.00	4.36	4.36	49.12	27.09	2.21	24.89	22.38
7	21.05	7.75	0.38	24.81	4.37	58.36	0.00	4.36	4.36	54.00	26.40	1.97	24.43	21.58
8	24.55	7.82	0.38	26.05	4.50	63.30	0.00	4.36	4.36	58.94	25.56	1.76	23.80	20.66
9	28.05	7.89	0.38	27.35	4.64	68.31	0.00	4.36	4.36	63.95	24.63	1.57	23.06	19.67
10	31.55	7.96	0.38	28.73	4.79	73.40	0.00	4.36	4.36	69.05	23.63	1.40	22.23	18.63
11	35.08	8.02	0.38	30.18	4.94	78.60	0.00	4.36	4.36	74.24	22.59	1.25	21.34	17.57
12	38.62	8.08	0.38	31.71	5.09	83.88	0.00	4.36	4.36	79.52	21.53	1.12	20.41	16.51
13	42.15	8.14	0.38	33.33	5.25	89.24	0.00	4.36	4.36	84.88	20.45	1.00	19.45	15.45
14	45.68	8.19	0.38	35.03	5.41	94.69	0.00	4.36	4.36	90.34	19.38	0.89	18.48	14.43
15	49.21	8.24	0.38	36.84	5.58	100.24	0.00	4.36	4.36	95.89	18.31	0.80	17.52	13.43
16	52.74	8.29	0.38	38.74	5.75	105.90	0.00	4.36	4.36	101.54	17.27	0.71	16.56	12.48
17	56.27	8.34	0.38	40.75	5.93	111.66	0.00	4.36	4.36	107.31	16.26	0.63	15.63	11.57
18	59.79	8.38	0.38	42.87	6.11	117.53	0.00	4.36	4.36	113.17	15.28	0.57	14.72	10.70
19	63.31	8.42	0.38	45.12	6.30	123.52	0.00	4.36	4.36	119.17	14.34	0.51	13.84	9.88
20	66.83	8.45	0.38	47.49	6.50	129.65	0.00	4.36	4.36	125.29	13.44	0.45	12.99	9.12
21	66.83	8.34	0.38	47.49	6.70	129.73	0.00	4.36	4.36	125.38	12.01	[illegible]	11.60	8.00
22	66.83	8.22	0.38	47.49	6.91	129.82	0.00	4.36	4.36	125.47	10.73	0.36	10.37	7.02
23	66.83	8.09	0.38	47.49	7.12	129.91	0.00	4.36	4.36	125.55	9.59	0.32	9.26	6.17
24	66.83	7.96	0.38	47.49	7.34	130.00	0.00	4.36	4.36	125.64	8.56	0.29	8.28	5.41
25	66.83	7.83	0.38	47.49	7.57	130.10	0.00	4.36	4.36	125.74	7.65	0.26	7.40	4.75
26	66.83	7.70	0.38	47.49	7.80	130.19	0.00	4.36	4.36	125.84	6.84	0.23	6.61	4.17
27	66.83	7.56	0.38	47.49	8.04	130.29	0.00	4.36	4.36	125.94	6.11	0.20	5.91	3.66
28	66.83	7.41	0.	47.49	8.29	130.40	0.00	4.36	4.36	126.04	5.46	0.18	5.28	3.21
29	66.83	7.26	0.38	47.49	8.55	130.51	0.00	4.36	4.36	126.15	4.88	0.16	4.72	2.82
30	66.83	7.11	0.38	47.49	8.82	130.63	0.00	4.36	4.36	126.27	4.36	0.15	4.21	2.48
TOTAL	1321.98	213.56	10.19	1029.63	164.33	2739.69	536.20	117.40	653.59	2086.09	436.33	426.12	10.21	-57.48

* Costs increased by 55%

NET PRESENT WORTH = Rs. 10.2069 million

B/C RATIO = 1.02 : 1

IRR = 12.30 %

686

TABLE 9.47.1

SENSITIVITY ANALYSIS OF MAILSI SYSTEM
ALT I *

(Rs.Million)

YEARS	BENEFITS: Increase in Agri. Prod.	BENEFITS: Savings in off-Road Hauling Exp.	BENEFITS: Canal O&M Savings	BENEFITS: Vehicle Operating Cost(VOC) Savings	BENEFITS: Time Savings	BENEFITS: Total Benefits	COSTS: Capital Cost	COSTS: O & M Cost	COSTS: Total Cost	CASH FLOW	PRESENT WORTH: Benefits @ 12%	PRESENT WORTH: Costs @ 12%	PRESENT WORTH: CASH FLOW 16%	PRESENT WORTH: CASH FLOW 18%
0	0.00	0.00	0.00	0.00	0.00	0.00	0.00	0.00	0.00	0.00	0.00	0.00	0.00	0.00
1	0.00	0.00	0.00	0.00	0.00	0.00	73.28	0.00	73.28	-73.28	0.00	65.43	-63.18	-62.11
2	0.63	0.31	0.02	1.70	0.22	2.87	65.02	0.44	65.46	-62.59	2.29	52.18	-46.51	-44.95
3	2.94	0.73	0.04	4.16	0.52	8.39	50.80	1.02	51.82	-43.43	5.97	36.88	-27.82	-26.43
4	7.57	1.27	0.07	7.48	0.93	17.31	50.39	1.75	52.14	-34.83	11.00	33.13	-19.24	-17.96
5	14.31	1.83	0.10	11.11	1.35	28.70	34.11	2.48	36.59	-7.89	16.28	20.76	-3.76	-3.45
6	21.07	2.19	0.12	13.72	1.64	38.73	0.00	2.92	2.92	35.81	19.62	1.48	14.70	13.27
7	25.32	2.21	0.12	14.40	1.69	43.73	0.00	2.92	2.92	40.82	19.78	1.32	14.44	12.81
8	29.57	2.23	0.12	15.12	1.74	48.77	0.00	2.92	2.92	45.86	19.70	1.18	13.99	12.20
9	33.84	2.25	0.12	15.87	1.79	53.87	0.00	2.92	2.92	50.95	19.42	1.05	13.40	11.49
10	38.12	2.27	0.12	16.67	1.85	59.01	0.00	2.92	2.92	56.10	19.00	0.94	12.72	10.72
11	39.81	2.27	0.12	17.51	1.90	61.60	0.00	2.92	2.92	58.69	17.71	0.84	11.47	9.50
12	41.51	2.27	0.12	18.41	1.95	64.25	0.00	2.92	2.92	61.33	16.49	0.75	10.33	8.42
13	43.21	2.27	0.12	19.35	2.02	66.95	0.00	2.92	2.92	64.04	15.34	0.67	9.30	7.45
14	44.92	2.27	0.12	20.34	2.08	69.72	0.00	2.92	2.92	66.80	14.27	0.60	8.36	6.58
15	46.63	2.26	0.12	21.39	2.14	72.54	0.00	2.92	2.92	69.62	13.25	0.53	7.51	5.81
16	48.34	2.26	0.12	22.50	2.21	75.42	0.00	2.92	2.92	72.50	12.30	0.48	6.75	5.13
17	50.06	2.26	0.12	23.67	2.27	78.37	0.00	2.92	2.92	75.46	11.41	0.42	6.05	4.53
18	51.78	2.25	0.12	24.91	2.34	81.40	0.00	2.92	2.92	78.48	10.58	0.38	5.43	3.99
19	53.51	2.24	0.12	26.23	2.40	84.49	0.00	2.92	2.92	81.58	9.81	0.34	4.86	3.51
20	55.23	2.24	0.12	27.62	2.48	87.68	0.00	2.92	2.92	84.76	9.09	0.30	4.36	3.09
21	55.23	2.19	0.12	27.62	2.56	87.71	0.00	2.92	2.92	84.80	8.12	0.27	3.76	2.62
22	55.23	2.15	0.12	27.62	2.63	87.74	0.00	2.92	2.92	84.83	7.25	0.24	3.24	2.22
23	55.23	2.10	0.12	27.62	2.71	87.78	0.00	2.92	2.92	84.86	6.48	0.22	2.79	1.89
24	55.23	2.06	0.12	27.62	2.79	87.81	0.00	2.92	2.92	84.90	5.79	0.19	2.41	1.60
25	55.23	2.01	0.12	27.62	2.87	87.84	0.00	2.92	2.92	84.93	5.17	0.17	2.08	1.36
26	55.23	1.96	0.12	27.62	2.96	87.89	0.00	2.92	2.92	84.97	4.62	0.15	1.79	1.15
27	55.23	1.91	0.12	27.62	3.05	87.92	0.00	2.92	2.92	85.01	4.12	0.14	1.55	0.97
28	55.23	1.85	0.12	27.62	3.14	87.96	0.00	2.92	2.92	85.05	3.68	0.12	1.33	0.83
29	55.23	1.80	0.12	27.62	3.23	88.00	0.00	2.92	2.92	85.08	3.29	0.11	1.15	0.70
30	55.23	1.81	0.12	27.62	3.33	88.10	0.00	2.92	2.92	85.19	2.94	0.10	0.99	0.59
TOTAL	1200.68	57.69	3.13	598.31	62.77	1922.58	273.60	78.59	352.19	1570.39	314.79	221.37	4.25	-22.46

* Benefits decreased by 10%

NET PRESENT WORTH = Rs. 93.4223 million

B/C RATIO = 1.42 : 1

IRR = 16.32 %

687

TABLE 9.47.2

SENSITIVITY ANALYSIS OF MAILSI SYSTEM
ALT II *

(Rs.Million)

YEARS	BENEFITS: Increase in Agri. Prod.	Savings in off-Road Hauling Exp.	Canal O&M Savings	Vehicle Operating Cost(VOC) Savings	Time Savings	Total Benefits	COSTS: Capital Cost	O & M Cost	Total Cost	CASH FLOW	PRESENT WORTH: Benefits @ 12%	Costs @ 12%	CASH FLOW 16%	CASH FLOW 18%
0	0.00	0.00	0.00	0.00	0.00	0.00	0.00	0.00	0.00	0.00	0.00	0.00	0.00	0.00
1	0.00	0.00	0.00	0.00	0.00	0.00	80.61	0.00	80.61	-80.61	0.00	71.98	-69.49	-68.32
2	0.70	0.35	0.02	1.89	0.24	3.19	71.52	0.44	71.96	-68.77	2.54	57.37	-51.11	-49.39
3	3.27	0.81	0.05	4.62	0.58	9.33	55.88	1.02	56.90	-47.57	6.64	40.50	-30.48	-28.95
4	8.41	1.41	0.08	8.31	1.03	19.23	55.43	1.75	57.18	-37.94	12.22	36.34	-20.96	-19.57
5	15.90	2.03	0.11	12.35	1.50	31.89	37.52	2.48	40.00	-8.11	18.09	22.70	-3.86	-3.54
6	23.41	2.43	0.13	15.24	1.82	43.03	0.00	2.92	2.92	40.12	21.80	1.48	16.46	14.86
7	28.13	2.45	0.13	16.00	1.88	48.59	0.00	2.92	2.92	45.68	21.98	1.32	16.16	14.34
8	32.86	2.48	0.13	16.80	1.93	54.19	0.00	2.92	2.92	51.27	21.89	1.18	15.64	13.64
9	37.60	2.50	0.13	17.64	1.99	59.85	0.00	2.92	2.92	56.94	21.58	1.05	14.97	12.84
10	42.35	2.52	0.13	18.52	2.05	65.57	0.00	2.92	2.92	62.65	21.11	0.94	14.20	11.97
11	44.23	2.52	0.13	19.46	2.11	68.45	0.00	2.92	2.92	65.53	19.68	0.84	12.81	10.61
12	46.12	2.52	0.13	20.45	2.17	71.39	0.00	2.92	2.92	68.47	18.32	0.75	11.54	9.40
13	48.01	2.52	0.13	21.50	2.24	74.39	0.00	2.92	2.92	71.48	17.05	0.67	10.38	8.31
14	49.91	2.52	0.13	22.60	2.31	77.47	0.00	2.92	2.92	74.55	15.85	0.60	9.33	7.35
15	51.81	2.52	0.13	23.77	2.38	80.60	0.00	2.92	2.92	77.69	14.73	0.53	8.38	6.49
16	53.71	2.51	0.13	25.00	2.45	83.80	0.00	2.92	2.92	80.88	13.67	0.48	7.53	5.72
17	55.62	2.51	0.13	26.30	2.52	87.08	0.00	2.92	2.92	84.16	12.68	0.42	6.75	5.05
18	57.53	2.50	0.13	27.68	2.60	90.44	0.00	2.92	2.92	87.53	11.76	0.38	6.05	4.45
19	59.45	2.49	0.13	29.14	2.67	93.88	0.00	2.92	2.92	90.97	10.90	0.34	5.42	3.92
20	61.37	2.48	0.13	30.69	2.75	97.42	0.00	2.92	2.92	94.50	10.10	0.30	4.86	3.45
21	61.37	2.44	0.13	30.69	2.84	97.46	0.00	2.92	2.92	94.54	9.02	0.27	4.19	2.92
22	61.37	2.39	0.13	30.69	2.92	97.49	0.00	2.92	2.92	94.58	8.06	0.24	3.61	2.48
23	61.37	2.34	0.13	30.69	3.01	97.53	0.00	2.92	2.92	94.62	7.20	0.22	3.11	2.10
24	61.37	2.29	0.13	30.69	3.10	97.57	0.00	2.92	2.92	94.65	6.43	0.19	2.69	1.78
25	61.37	2.23	0.13	30.69	3.19	97.61	0.00	2.92	2.92	94.69	5.74	0.17	2.32	1.51
26	61.37	2.18	0.13	30.69	3.29	97.65	0.00	2.92	2.92	94.73	5.13	0.15	2.00	1.28
27	61.37	2.12	0.13	30.69	3.39	97.69	0.00	2.92	2.92	94.78	4.58	0.14	1.72	1.09
28	61.37	2.06	0.13	30.69	3.49	97.74	0.00	2.92	2.92	94.82	4.09	0.12	1.49	0.92
29	61.37	2.00	0.13	30.69	3.59	97.78	0.00	2.92	2.92	94.86	3.66	0.11	1.28	0.78
30	61.37	2.01	0.13	30.69	3.70	97.89	0.00	2.92	2.92	94.98	3.27	0.10	1.11	0.66
TOTAL	1334.09	64.10	3.48	664.79	69.74	2136.20	300.96	78.59	379.55	1756.65	349.77	241.85	8.10	-21.85

* Costs increased by 10%

NET PRESENT WORTH = Rs. 107.919 million

B/C RATIO = 1.45 : 1

IRR = 16.54 %

688

TABLE 9.47.3

SENSITIVITY ANALYSIS OF MAILSI SYSTEM
ALT III *

(Rs.Million)

YEARS	BENEFITS: Increase in Agri. Prod.	Savings in off-Road Hauling Exp.	Canal O&M Savings	Vehicle Operating Cost(VOC) Savings	Time Savings	Total Benefits	COSTS: Capital Cost	O & M Cost	Total Cost	CASH FLOW	PRESENT WORTH: Benefits @ 12%	Costs @ 12%	CASH FLOW 14%	CASH FLOW 16%
0	0.00	0.00	0.00	0.00	0.00	0.00	0.00	0.00	0.00	0.00	0.00	0.00	0.00	0.00
1	0.00	0.00	0.00	0.00	0.00	0.00	80.61	0.00	80.61	-80.61	0.00	71.98	-70.71	-69.49
2	0.63	0.31	0.02	1.70	0.22	2.87	71.52	0.44	71.96	-69.09	2.29	57.37	-53.16	-51.34
3	2.94	0.73	0.04	4.16	0.52	8.39	55.88	1.02	56.90	-48.51	5.97	40.50	-32.74	-31.08
4	7.57	1.27	0.07	7.48	0.93	17.31	55.43	1.75	57.18	-39.87	11.00	36.34	-23.60	-22.02
5	14.31	1.83	0.10	11.11	1.35	28.70	37.52	2.48	40.00	-11.30	16.28	22.70	-5.87	-5.38
6	21.07	2.19	0.12	13.72	1.64	38.73	0.00	2.92	2.92	35.81	19.62	1.48	16.32	14.70
7	25.32	2.21	0.12	14.40	1.69	43.73	0.00	2.92	2.92	40.82	19.78	1.32	16.31	14.44
8	29.57	2.23	0.12	15.12	1.74	48.77	0.00	2.92	2.92	45.86	19.70	1.18	16.07	13.99
9	33.84	2.25	0.12	15.87	1.79	53.87	0.00	2.92	2.92	50.95	19.42	1.05	15.67	13.40
10	38.12	2.27	0.12	16.67	1.85	59.01	0.00	2.92	2.92	56.10	19.00	0.94	15.13	12.72
11	39.81	2.27	0.12	17.51	1.90	61.60	0.00	2.92	2.92	58.69	17.71	0.84	13.89	11.47
12	41.51	2.27	0.12	18.41	1.95	64.25	0.00	2.92	2.92	61.33	16.49	0.75	12.73	10.33
13	43.21	2.27	0.12	19.35	2.02	66.95	0.00	2.92	2.92	64.04	15.34	0.67	11.66	9.30
14	44.92	2.27	0.12	20.34	2.08	69.72	0.00	2.92	2.92	66.80	14.27	0.60	10.67	8.36
15	46.63	2.26	0.12	21.39	2.14	72.54	0.00	2.92	2.92	69.62	13.25	0.53	9.75	7.51
16	48.34	2.26	0.12	22.50	2.21	75.42	0.00	2.92	2.92	72.50	12.30	0.48	8.91	6.75
17	50.06	2.26	0.12	23.67	2.27	78.37	0.00	2.92	2.92	75.46	11.41	0.42	8.13	6.05
18	51.78	2.25	0.12	24.91	2.34	81.40	0.00	2.92	2.92	78.48	10.58	0.38	7.42	5.43
19	53.51	2.24	0.12	26.23	2.40	84.49	0.00	2.92	2.92	81.58	9.81	0.34	6.77	4.86
20	55.23	2.24	0.12	27.62	2.48	87.68	0.00	2.92	2.92	84.76	9.09	0.30	6.17	4.36
21	55.23	2.19	0.12	27.62	2.56	87.71	0.00	2.92	2.92	84.80	8.12	0.27	5.41	3.76
22	55.23	2.15	0.12	27.62	2.63	87.74	0.00	2.92	2.92	84.83	7.25	0.24	4.75	3.24
23	55.23	2.10	0.12	27.62	2.71	87.78	0.00	2.92	2.92	84.86	6.48	0.22	4.17	2.79
24	55.23	2.06	0.12	27.62	2.79	87.81	0.00	2.92	2.92	84.90	5.79	0.19	3.66	2.41
25	55.23	2.01	0.12	27.62	2.87	87.84	0.00	2.92	2.92	84.93	5.17	0.17	3.21	2.08
26	55.23	1.96	0.12	27.62	2.96	87.89	0.00	2.92	2.92	84.97	4.62	0.15	2.82	1.79
27	55.23	1.91	0.12	27.62	3.05	87.92	0.00	2.92	2.92	85.01	4.12	0.14	2.47	1.55
28	55.23	1.85	0.12	27.62	3.14	87.96	0.00	2.92	2.92	85.05	3.68	0.12	2.17	1.33
29	55.23	1.80	0.12	27.62	3.23	88.00	0.00	2.92	2.92	85.08	3.29	0.11	1.90	1.15
30	55.23	1.81	0.12	27.62	3.33	88.10	0.00	2.92	2.92	85.19	2.94	0.10	1.67	0.99
TOTAL	1200.68	57.69	3.13	598.31	62.77	1922.58	300.96	78.59	379.55	1543.03	314.79	241.85	21.75	-14.56

* Benefits decreased & Cost increased by 10%

NET PRESENT WORTH = Rs. 72.9423 million

B/C RATIO = 1.30 : 1

IRR = 15.20 %

689

TABLE 9.47.4

SENSITIVITY ANALYSIS OF MAILSI SYSTEM
ALT IV *

(Rs.Million)

YEARS	BENEFITS: Increase in Agri. Prod.	BENEFITS: Savings in off-Road Hauling Exp.	BENEFITS: Canal O&M Savings	BENEFITS: Vehicle Operating Cost (VOC) Savings	BENEFITS: Time Savings	BENEFITS: Total Benefits	COSTS: Capital Cost	COSTS: O & M Cost	COSTS: Total Cost	CASH FLOW	PRESENT WORTH: Benefits @ 12%	PRESENT WORTH: Costs @ 12%	PRESENT WORTH: CASH FLOW 12%	PRESENT WORTH: CASH FLOW 14%
0	0.00	0.00	0.00	0.00	0.00	0.00	0.00	0.00	0.00	0.00	0.00	0.00	0.00	0.00
1	0.00	0.00	0.00	0.00	0.00	0.00	73.28	0.00	73.28	-73.28	0.00	65.43	-65.43	-64.28
2	0.46	0.22	0.01	1.23	0.16	2.07	65.02	0.44	65.46	-63.38	1.65	52.18	-50.53	-48.77
3	2.13	0.53	0.03	3.00	0.38	6.06	50.80	1.02	51.82	-45.76	4.31	36.88	-32.57	-30.80
4	5.47	0.92	0.05	5.40	0.67	12.50	50.39	1.75	52.14	-39.64	7.94	33.13	-25.19	-23.47
5	10.34	1.32	0.07	8.03	0.98	20.73	34.11	2.48	36.59	-15.86	11.76	20.76	-9.00	-8.24
6	15.22	1.58	0.08	9.91	1.18	27.97	0.00	2.92	2.92	25.05	14.17	1.48	12.69	11.41
7	18.28	1.60	0.08	10.40	1.22	31.58	0.00	2.92	2.92	28.67	14.29	1.32	12.97	11.46
8	21.36	1.61	0.08	10.92	1.25	35.22	0.00	2.92	2.92	32.31	14.23	1.18	13.05	11.33
9	24.44	1.62	0.08	11.46	1.29	38.90	0.00	2.92	2.92	35.99	14.03	1.05	12.98	11.07
10	27.53	1.64	0.08	12.04	1.33	42.62	0.00	2.92	2.92	39.70	13.72	0.94	12.78	10.71
11	28.75	1.64	0.08	12.65	1.37	44.49	0.00	2.92	2.92	41.58	12.79	0.84	11.95	9.84
12	29.98	1.64	0.08	13.29	1.41	46.40	0.00	2.92	2.92	43.49	11.91	0.75	11.16	9.03
13	31.21	1.64	0.08	13.97	1.46	48.36	0.00	2.92	2.92	45.44	11.08	0.67	10.41	8.27
14	32.44	1.64	0.08	14.69	1.50	50.35	0.00	2.92	2.92	47.44	10.30	0.60	9.71	7.58
15	33.68	1.64	0.08	15.45	1.55	52.39	0.00	2.92	2.92	49.47	9.57	0.53	9.04	6.93
16	34.91	1.63	0.08	16.25	1.59	54.47	0.00	2.92	2.92	51.55	8.89	0.48	8.41	6.34
17	36.15	1.63	0.08	17.10	1.64	56.60	0.00	2.92	2.92	53.69	8.24	0.42	7.82	5.79
18	37.39	1.63	0.08	17.99	1.69	58.79	0.00	2.92	2.92	55.87	7.64	0.38	7.27	5.28
19	38.64	1.62	0.08	18.94	1.74	61.02	0.00	2.92	2.92	58.11	7.09	0.34	6.75	4.82
20	39.89	1.61	0.08	19.95	1.79	63.32	0.00	2.92	2.92	60.41	6.56	0.30	6.26	4.40
21	39.89	1.58	0.08	19.95	1.85	63.35	0.00	2.92	2.92	60.43	5.86	0.27	5.59	3.86
22	39.89	1.55	0.08	19.95	1.90	63.37	0.00	2.92	2.92	60.45	5.24	0.24	5.00	3.38
23	39.89	1.52	0.08	19.95	1.96	63.40	0.00	2.92	2.92	60.48	4.68	0.22	4.46	2.97
24	39.89	1.49	0.08	19.95	2.02	63.42	0.00	2.92	2.92	60.50	4.18	0.19	3.99	2.61
25	39.89	1.45	0.08	19.95	2.07	63.44	0.00	2.92	2.92	60.53	3.73	0.17	3.56	2.29
26	39.89	1.41	0.08	19.95	2.14	63.47	0.00	2.92	2.92	60.56	3.33	0.15	3.18	2.01
27	39.89	1.38	0.08	19.95	2.20	63.50	0.00	2.92	2.92	60.58	2.98	0.14	2.84	1.76
28	39.89	1.34	0.08	19.95	2.27	63.53	0.00	2.92	2.92	60.61	2.66	0.12	2.54	1.55
29	39.89	1.30	0.08	19.95	2.33	63.55	0.00	2.92	2.92	60.64	2.38	0.11	2.27	1.36
30	39.89	1.31	0.08	19.95	2.41	63.63	0.00	2.92	2.92	60.72	2.12	0.10	2.03	1.19
TOTAL	867.16	41.67	2.26	432.11	45.33	1388.53	273.60	78.59	352.19	1036.34	227.35	221.37	5.98	-28.44

* Benefits decreased by 35%

NET PRESENT WORTH = Rs. 5.97970 million

B/C RATIO = 1.03 : 1

IRR = 12.35 %

690

TABLE 9.47.5

SENSITIVITY ANALYSIS OF MAILSI SYSTEM
ALT V *

(Rs.Million)

YEARS	BENEFITS: Increase in Agri. Prod.	Savings in off-Road Hauling Exp.	Canal O&M Savings	Vehicle Operating Cost(VOC) Savings	Time Savings	Total Benefits	COSTS: Capital Cost	O & M Cost	Total Cost	CASH FLOW	PRESENT WORTH: Benefits @ 12%	Costs @ 12%	CASH FLOW 12%	CASH FLOW 14%
0	0.00	0.00	0.00	0.00	0.00	0.00	0.00	0.00	0.00	0.00	0.00	0.00	0.00	0.00
1	0.00	0.00	0.00	0.00	0.00	0.00	113.59	0.00	113.59	-113.59	0.00	101.42	-101.42	-99.64
2	0.70	0.35	0.02	1.89	0.24	3.19	100.78	0.44	101.22	-98.03	2.54	80.69	-78.15	-75.43
3	3.27	0.81	0.05	4.62	0.58	9.33	78.74	1.02	79.76	-70.43	6.64	56.77	-50.13	-47.54
4	8.41	1.41	0.08	8.31	1.03	19.23	78.10	1.75	79.85	-60.62	12.22	50.75	-38.52	-35.89
5	15.90	2.03	0.11	12.35	1.50	31.89	52.87	2.48	55.35	-23.46	18.09	31.41	-13.31	-12.18
6	23.41	2.43	0.13	15.24	1.82	43.03	0.00	2.92	2.92	40.12	21.80	1.48	20.32	18.28
7	28.13	2.45	0.13	16.00	1.88	48.59	0.00	2.92	2.92	45.68	21.98	1.32	20.66	18.25
8	32.86	2.48	0.13	16.80	1.93	54.19	0.00	2.92	2.92	51.27	21.89	1.18	20.71	17.97
9	37.60	2.50	0.13	17.64	1.99	59.85	0.00	2.92	2.92	56.94	21.58	1.05	20.53	17.51
10	42.35	2.52	0.13	18.52	2.05	65.57	0.00	2.92	2.92	62.65	21.11	0.94	20.17	16.90
11	44.23	2.52	0.13	19.46	2.11	68.45	0.00	2.92	2.92	65.53	19.68	0.84	18.84	15.51
12	46.12	2.52	0.13	20.45	2.17	71.39	0.00	2.92	2.92	68.47	18.32	0.75	17.58	14.21
13	48.01	2.52	0.13	21.50	2.24	74.39	0.00	2.92	2.92	71.48	17.05	0.67	16.38	13.01
14	49.91	2.52	0.13	22.60	2.31	77.47	0.00	2.92	2.92	74.55	15.85	0.60	15.25	11.91
15	51.81	2.52	0.13	23.77	2.38	80.60	0.00	2.92	2.92	77.69	14.73	0.53	14.19	10.88
16	53.71	2.51	0.13	25.00	2.45	83.80	0.00	2.92	2.92	80.88	13.67	0.48	13.19	9.94
17	55.62	2.51	0.13	26.30	2.52	87.08	0.00	2.92	2.92	84.16	12.68	0.42	12.26	9.07
18	57.53	2.50	0.13	27.68	2.60	90.44	0.00	2.92	2.92	87.53	11.76	0.38	11.38	8.28
19	59.45	2.49	0.13	29.14	2.67	93.88	0.00	2.92	2.92	90.97	10.90	0.34	10.56	7.55
20	61.37	2.48	0.13	30.69	2.75	97.42	0.00	2.92	2.92	94.50	10.10	0.30	9.80	6.88
21	61.37	2.44	0.13	30.69	2.84	97.46	0.00	2.92	2.92	94.54	9.02	0.27	8.75	6.03
22	61.37	2.39	0.13	30.69	2.92	97.49	0.00	2.92	2.92	94.58	8.06	0.24	7.82	5.30
23	61.37	2.34	0.13	30.69	3.01	97.53	0.00	2.92	2.92	94.62	7.20	0.22	6.98	4.65
24	61.37	2.29	0.13	30.69	3.10	97.57	0.00	2.92	2.92	94.65	6.43	0.19	6.24	4.08
25	61.37	2.23	0.13	30.69	3.19	97.61	0.00	2.92	2.92	94.69	5.74	0.17	5.57	3.58
26	61.37	2.18	0.13	30.69	3.29	97.65	0.00	2.92	2.92	94.73	5.13	0.15	4.98	3.14
27	61.37	2.12	0.13	30.69	3.39	97.69	0.00	2.92	2.92	94.78	4.58	0.14	4.44	2.76
28	61.37	2.06	0.13	30.69	3.49	97.74	0.00	2.92	2.92	94.82	4.09	0.12	3.97	2.42
29	61.37	2.00	0.13	30.69	3.59	97.78	0.00	2.92	2.92	94.86	3.66	0.11	3.55	2.12
30	61.37	2.01	0.13	30.69	3.70	97.89	0.00	2.92	2.92	94.98	3.27	0.10	3.17	1.86
TOTAL	1334.09	64.10	3.48	664.79	69.74	2136.20	424.08	78.59	502.67	1633.53	349.77	334.01	15.76	-38.60

* Costs increased by 55%

NET PRESENT WORTH = Rs15.7594 million

B/C RATIO = 1.05 : 1

IRR = 12.58 %

691

TABLE 9.48.1

SENSITIVITY ANALYSIS OF NASIR SYSTEM
ALT I *

(Rs.Million)

YEARS	BENEFITS: Increase in Agri. Prod.	BENEFITS: Savings in off-Road Hauling Exp.	BENEFITS: Canal O&M Savings	BENEFITS: Vehicle Operating Cost(VOC) Savings	BENEFITS: Time Savings	BENEFITS: Total Benefits	COSTS: Capital Cost	COSTS: O & M Cost	COSTS: Total Cost	CASH FLOW	PRESENT WORTH: Benefits @ 12%	PRESENT WORTH: Costs @ 12%	PRESENT WORTH: CASH FLOW 18%	PRESENT WORTH: CASH FLOW 20%
0	0.00	0.00	0.00	0.00	0.00	0.00	0.00	0.00	0.00	0.00	0.00	0.00	0.00	0.00
1	0.00	0.00	0.00	0.00	0.00	0.00	14.58	0.00	14.58	-14.58	0.00	13.01	-12.35	-12.15
2	0.10	0.25	0.01	0.40	0.05	0.81	12.93	0.10	13.03	-12.22	0.64	10.39	-8.78	-8.49
3	0.49	0.59	0.03	0.99	0.12	2.21	10.10	0.23	10.33	-8.12	1.58	7.35	-4.94	-4.70
4	1.24	1.05	0.05	1.77	0.20	4.32	10.02	0.39	10.42	-6.09	2.75	6.62	-3.14	-2.94
5	2.35	1.56	0.08	2.64	0.30	6.92	6.78	0.56	7.34	-0.42	3.93	4.17	-0.18	-0.17
6	3.47	1.92	0.09	3.25	0.36	9.09	0.00	0.66	0.66	8.43	4.61	0.33	3.12	2.82
7	4.17	1.99	0.09	3.41	0.37	10.03	0.00	0.66	0.66	9.37	4.54	0.30	2.94	2.62
8	4.88	2.06	0.09	3.58	0.38	10.99	0.00	0.66	0.66	10.33	4.44	0.26	2.75	2.40
9	5.59	2.13	0.09	3.76	0.40	11.97	0.00	0.66	0.66	11.31	4.32	0.24	2.55	2.19
10	6.30	2.21	0.09	3.94	0.41	12.95	0.00	0.66	0.66	12.29	4.17	0.21	2.35	1.99
11	6.80	2.27	0.09	4.14	0.42	13.73	0.00	0.66	0.66	13.07	3.95	0.19	2.12	1.76
12	7.32	2.34	0.09	4.35	0.43	14.53	0.00	0.66	0.66	13.87	3.73	0.17	1.90	1.56
13	7.83	2.40	0.09	4.57	0.45	15.34	0.00	0.66	0.66	14.69	3.52	0.15	1.71	1.37
14	8.34	2.47	0.09	4.80	0.47	16.17	0.00	0.66	0.66	15.52	3.31	0.13	1.53	1.21
15	8.85	2.54	0.09	5.04	0.49	17.01	0.00	0.66	0.66	16.35	3.11	0.12	1.37	1.06
16	9.36	2.61	0.09	5.30	0.50	17.86	0.00	0.66	0.66	17.20	2.91	0.11	1.22	0.93
17	9.87	2.68	0.09	5.57	0.51	18.73	0.00	0.66	0.66	18.07	2.73	0.10	1.08	0.81
18	10.38	2.75	0.09	5.86	0.53	19.61	0.00	0.66	0.66	18.96	2.55	0.09	0.96	0.71
19	10.89	2.82	0.09	6.17	0.55	20.52	0.00	0.66	0.66	19.86	2.38	0.08	0.86	0.62
20	11.40	2.90	0.09	6.49	0.57	21.45	0.00	0.66	0.66	20.79	2.22	0.07	0.76	0.54
21	11.40	2.90	0.09	6.49	0.59	21.47	0.00	0.66	0.66	20.81	1.99	0.06	0.64	0.45
22	11.40	2.91	0.09	6.49	0.61	21.51	0.00	0.66	0.66	20.85	1.78	0.05	0.55	0.38
23	11.40	2.92	0.09	6.49	0.63	21.53	0.00	0.66	0.66	20.88	1.59	0.05	0.46	0.32
24	11.40	2.93	0.09	6.49	0.65	21.56	0.00	0.66	0.66	20.90	1.42	0.04	0.39	0.26
25	11.40	2.94	0.09	6.49	0.68	21.59	0.00	0.66	0.66	20.94	1.27	0.04	0.33	0.22
26	11.40	2.95	0.09	6.49	0.69	21.62	0.00	0.66	0.66	20.96	1.14	0.03	0.28	0.18
27	11.40	2.95	0.09	6.49	0.72	21.66	0.00	0.66	0.66	21.00	1.02	0.03	0.24	0.15
28	11.40	2.96	0.09	6.49	0.75	21.69	0.00	0.66	0.66	21.04	0.91	0.03	0.20	0.13
29	11.40	2.97	0.09	6.49	0.77	21.73	0.00	0.66	0.66	21.07	0.81	0.02	0.17	0.11
30	11.40	2.98	0.09	6.49	0.79	21.76	0.00	0.66	0.66	21.10	0.73	0.02	0.15	0.09
TOTAL	233.65	68.96	2.47	140.91	14.36	460.35	54.41	17.68	72.09	388.26	74.01	44.46	1.25	-3.55

* Benefits decreased by 10%

NET PRESENT WORTH = Rs. 29.5464 million

B/C RATIO = 1.66 : 1

IRR = 18.52 %

692

TABLE 9.48.2

SENSITIVITY ANALYSIS OF NASIR SYSTEM
ALT II *

(Rs.Million)

YEARS	BENEFITS: Increase in Agri. Prod.	Savings in off-Road Hauling Exp.	Canal O&M Savings	Vehicle Operating Cost(VOC) Savings	Time Savings	Total Benefits	COSTS: Capital Cost	O & M Cost	Total Cost	CASH FLOW	PRESENT WORTH: Benefits @ 12%	Costs @ 12%	CASH FLOW 18%	CASH FLOW 20%
0	0.00	0.00	0.00	0.00	0.00	0.00	0.00	0.00	0.00	0.00	0.00	0.00	0.00	0.00
1	0.00	0.00	0.00	0.00	0.00	0.00	16.03	0.00	16.03	-16.03	0.00	12.78	0.00	0.00
2	0.11	0.27	0.02	0.45	0.05	0.90	14.22	0.10	14.32	-13.42	0.64	10.19	-11.51	-11.13
3	0.54	0.66	0.04	1.10	0.13	2.46	11.11	0.23	11.34	-8.88	1.56	7.21	-8.17	-7.77
4	1.38	1.17	0.06	1.97	0.22	4.80	11.02	0.39	11.42	-6.61	2.73	6.48	-4.58	-4.28
5	2.61	1.74	0.09	2.93	0.33	7.69	7.46	0.56	8.02	-0.33	3.90	4.06	-2.89	-2.66
6	3.85	2.14	0.10	3.61	0.40	10.10	0.00	0.66	0.66	9.45	4.57	0.30	-0.12	-0.11
7	4.63	2.21	0.10	3.79	0.41	11.14	0.00	0.66	0.66	10.49	4.50	0.26	2.97	2.64
8	5.42	2.29	0.10	3.98	0.42	12.21	0.00	0.66	0.66	11.55	4.40	0.24	2.79	2.44
9	6.21	2.37	0.10	4.18	0.44	13.30	0.00	0.66	0.66	12.64	4.28	0.21	2.60	2.24
10	7.00	2.45	0.10	4.38	0.45	14.39	0.00	0.66	0.66	13.73	4.14	0.19	2.42	2.04
11	7.56	2.52	0.10	4.60	0.47	15.26	0.00	0.66	0.66	14.60	3.92	0.17	2.22	1.85
12	8.13	2.60	0.10	4.83	0.48	16.14	0.00	0.66	0.66	15.48	3.70	0.15	2.00	1.64
13	8.70	2.67	0.10	5.08	0.50	17.05	0.00	0.66	0.66	16.39	3.49	0.13	1.80	1.45
14	9.27	2.75	0.10	5.33	0.52	17.97	0.00	0.66	0.66	17.31	3.28	0.12	1.62	1.28
15	9.83	2.82	0.10	5.60	0.54	18.90	0.00	0.66	0.66	18.24	3.08	0.11	1.45	1.12
16	10.40	2.90	0.10	5.89	0.55	19.84	0.00	0.66	0.66	19.19	2.89	0.10	1.29	0.99
17	10.97	2.98	0.10	6.19	0.57	20.81	0.00	0.66	0.66	20.16	2.71	0.09	1.15	0.86
18	11.53	3.06	0.10	6.51	0.59	21.79	0.00	0.66	0.66	21.14	2.53	0.08	1.02	0.76
19	12.10	3.14	0.10	6.85	0.61	22.80	0.00	0.66	0.66	22.14	2.36	0.07	0.91	0.66
20	12.67	3.22	0.10	7.21	0.63	23.83	0.00	0.66	0.66	23.17	2.21	0.06	0.81	0.58
21	12.67	3.23	0.10	7.21	0.65	23.86	0.00	0.66	0.66	23.20	1.97	0.05	0.72	0.50
22	12.67	3.24	0.10	7.21	0.68	23.90	0.00	0.66	0.66	23.24	1.76	0.05	0.61	0.42
23	12.67	3.24	0.10	7.21	0.70	23.92	0.00	0.66	0.66	23.27	1.58	0.04	0.52	0.35
24	12.67	3.25	0.10	7.21	0.72	23.95	0.00	0.66	0.66	23.30	1.41	0.04	0.44	0.29
25	12.67	3.26	0.10	7.21	0.75	23.99	0.00	0.66	0.66	23.34	1.26	0.03	0.37	0.24
26	12.67	3.27	0.10	7.21	0.77	24.02	0.00	0.66	0.66	23.37	1.13	0.03	0.32	0.20
27	12.67	3.28	0.10	7.21	0.80	24.06	0.00	0.66	0.66	23.41	1.01	0.03	0.27	0.17
28	12.67	3.29	0.10	7.21	0.83	24.10	0.00	0.66	0.66	23.45	0.90	0.02	0.23	0.14
29	12.67	3.30	0.10	7.21	0.86	24.14	0.00	0.66	0.66	23.49	0.81	0.02	0.19	0.12
30	12.67	3.32	0.10	7.21	0.88	24.18	0.00	0.66	0.66	23.52	0.00	0.00	0.16	0.10
TOTAL	259.61	76.62	2.75	156.57	15.95	511.50	59.85	17.68	77.53	433.97	72.70	43.31	1.59	-2.87

* Costs increased by 10%

NET PRESENT WORTH = Rs. 29.3850 million

B/C RATIO = 1.68 : 1

IRR = 18.71 %

693

TABLE 9.48.3

SENSITIVITY ANALYSIS OF NASIR SYSTEM
ALT III *

(Rs.Million)

YEARS	BENEFITS: Increase in Agri. Prod.	Savings in off-Road Hauling Exp.	Canal O&M Savings	Vehicle Operating Cost(VOC) Savings	Time Savings	Total Benefits	COSTS: Capital Cost	O & M Cost	Total Cost	CASH FLOW	PRESENT WORTH: Benefits @ 12%	Costs @ 12%	CASH FLOW 16%	CASH FLOW 18%
0	0.00	0.00	0.00	0.00	0.00	0.00	0.00	0.00	0.00	0.00	0.00	0.00	0.00	0.00
1	0.00	0.00	0.00	0.00	0.00	0.00	16.03	0.00	16.03	-16.03	0.00	14.31	-13.82	-13.59
2	0.10	0.25	0.01	0.40	0.05	0.81	14.22	0.10	14.32	-13.51	0.64	11.42	-10.04	-9.71
3	0.49	0.59	0.03	0.99	0.12	2.21	11.11	0.23	11.34	-9.13	1.58	8.07	-5.85	-5.56
4	1.24	1.05	0.05	1.77	0.20	4.32	11.02	0.39	11.42	-7.09	2.75	7.26	-3.92	-3.66
5	2.35	1.56	0.08	2.64	0.30	6.92	7.46	0.56	8.02	-1.10	3.93	4.55	-0.52	-0.48
6	3.47	1.92	0.09	3.25	0.36	9.09	0.00	0.66	0.66	8.43	4.61	0.33	3.46	3.12
7	4.17	1.99	0.09	3.41	0.37	10.03	0.00	0.66	0.66	9.37	4.54	0.30	3.32	2.94
8	4.88	2.06	0.09	3.58	0.38	10.99	0.00	0.66	0.66	10.33	4.44	0.26	3.15	2.75
9	5.59	2.13	0.09	3.76	0.40	11.97	0.00	0.66	0.66	11.31	4.32	0.24	2.97	2.55
10	6.30	2.21	0.09	3.94	0.41	12.95	0.00	0.66	0.66	12.29	4.17	0.21	2.79	2.35
11	6.80	2.27	0.09	4.14	0.42	13.73	0.00	0.66	0.66	13.07	3.95	0.19	2.56	2.12
12	7.32	2.34	0.09	4.35	0.43	14.53	0.00	0.66	0.66	13.87	3.73	0.17	2.34	1.90
13	7.83	2.40	0.09	4.57	0.45	15.34	0.00	0.66	0.66	14.69	3.52	0.15	2.13	1.71
14	8.34	2.47	0.09	4.80	0.47	16.17	0.00	0.66	0.66	15.52	3.31	0.13	1.94	1.53
15	8.85	2.54	0.09	5.04	0.49	17.01	0.00	0.66	0.66	16.35	3.11	0.12	1.76	1.37
16	9.36	2.61	0.09	5.30	0.50	17.86	0.00	0.66	0.66	17.20	2.91	0.11	1.60	1.22
17	9.87	2.68	0.09	5.57	0.51	18.73	0.00	0.66	0.66	18.07	2.73	0.10	1.45	1.08
18	10.38	2.75	0.09	5.86	0.53	19.61	0.00	0.66	0.66	18.96	2.55	0.09	1.31	0.96
19	10.89	2.82	0.09	6.17	0.55	20.52	0.00	0.66	0.66	19.86	2.38	0.08	1.18	0.86
20	11.40	2.90	0.09	6.49	0.57	21.45	0.00	0.66	0.66	20.79	2.22	0.07	1.07	0.76
21	11.40	2.90	0.09	6.49	0.59	21.47	0.00	0.66	0.66	20.81	1.99	0.06	0.92	0.64
22	11.40	2.91	0.09	6.49	0.61	21.51	0.00	0.66	0.66	20.85	1.78	0.05	0.80	0.55
23	11.40	2.92	0.09	6.49	0.63	21.53	0.00	0.66	0.66	20.88	1.59	0.05	0.69	0.46
24	11.40	2.93	0.09	6.49	0.65	21.56	0.00	0.66	0.66	20.90	1.42	0.04	0.59	0.39
25	11.40	2.94	0.09	6.49	0.68	21.59	0.00	0.66	0.66	20.94	1.27	0.04	0.51	0.33
26	11.40	2.95	0.09	6.49	0.69	21.62	0.00	0.66	0.66	20.96	1.14	0.03	0.44	0.28
27	11.40	2.95	0.09	6.49	0.72	21.66	0.00	0.66	0.66	21.00	1.02	0.03	0.38	0.24
28	11.40	2.96	0.09	6.49	0.75	21.69	0.00	0.66	0.66	21.04	0.91	0.03	0.33	0.20
29	11.40	2.97	0.09	6.49	0.77	21.73	0.00	0.66	0.66	21.07	0.81	0.02	0.28	0.17
30	11.40	2.98	0.09	6.49	0.79	21.76	0.00	0.66	0.66	21.10	0.73	0.02	0.25	0.15
TOTAL	233.65	68.96	2.47	140.91	14.36	460.35	59.85	17.68	77.53	382.82	74.01	48.53	4.08	-2.34

* Benefits decreased & Cost increased by 10%

NET PRESENT WORTH = Rs. 25.4734 million

B/C RATIO = 1.52 : 1

IRR = 17.27 %

694

TABLE 9.48.4

SENSITIVITY ANALYSIS OF NASIR SYSTEM
ALT IV *

(Rs.Million)

YEARS	BENEFITS: Increase in Agri. Prod.	Savings in off-Road Hauling Exp.	Canal O&M Savings	Vehicle Operating Cost(VOC) Savings	Time Savings	Total Benefits	COSTS: Capital Cost	O & M Cost	Total Cost	CASH FLOW	PRESENT WORTH: Benefits @ 12%	Costs @ 12%	CASH FLOW 12%	CASH FLOW 14%
0	0.00	0.00	0.00	0.00	0.00	0.00	0.00	0.00	0.00	0.00	0.00	0.00	0.00	0.00
1	0.00	0.00	0.00	0.00	0.00	0.00	14.58	0.00	14.58	-14.58	0.00	13.01	-13.01	-12.79
2	0.06	0.15	0.01	0.25	0.03	0.49	12.93	0.10	13.03	-12.54	0.39	10.39	-9.99	-9.65
3	0.30	0.36	0.02	0.60	0.07	1.35	10.10	0.23	10.33	-8.98	0.96	7.35	-6.39	-6.06
4	0.76	0.64	0.03	1.08	0.12	2.64	10.02	0.39	10.42	-7.77	1.68	6.62	-4.94	-4.60
5	1.44	0.95	0.05	1.61	0.18	4.23	6.78	0.56	7.34	-3.11	2.40	4.17	-1.76	-1.62
6	2.12	1.17	0.06	1.99	0.22	5.56	0.00	0.66	0.66	4.90	2.81	0.33	2.48	2.23
7	2.55	1.21	0.06	2.09	0.23	6.13	0.00	0.66	0.66	5.47	2.77	0.30	2.48	2.19
8	2.98	1.26	0.06	2.19	0.23	6.71	0.00	0.66	0.66	6.06	2.71	0.26	2.45	2.12
9	3.42	1.30	0.06	2.30	0.24	7.31	0.00	0.66	0.66	6.66	2.64	0.24	2.40	2.05
10	3.85	1.35	0.06	2.41	0.25	7.91	0.00	0.66	0.66	7.26	2.55	0.21	2.34	1.96
11	4.16	1.39	0.06	2.53	0.26	8.39	0.00	0.66	0.66	7.74	2.41	0.19	2.22	1.83
12	4.47	1.43	0.06	2.66	0.26	8.88	0.00	0.66	0.66	8.22	2.28	0.17	2.11	1.71
13	4.79	1.47	0.06	2.79	0.28	9.38	0.00	0.66	0.66	8.72	2.15	0.15	2.00	1.59
14	5.10	1.51	0.06	2.93	0.29	9.88	0.00	0.66	0.66	9.23	2.02	0.13	1.89	1.47
15	5.41	1.55	0.06	3.08	0.30	10.39	0.00	0.66	0.66	9.74	1.90	0.12	1.78	1.36
16	5.72	1.59	0.06	3.24	0.30	10.91	0.00	0.66	0.66	10.26	1.78	0.11	1.67	1.26
17	6.03	1.64	0.06	3.41	0.31	11.45	0.00	0.66	0.66	10.79	1.67	0.10	1.57	1.16
18	6.34	1.68	0.06	3.58	0.32	11.99	0.00	0.66	0.66	11.33	1.56	0.09	1.47	1.07
19	6.66	1.73	0.06	3.77	0.34	12.54	0.00	0.66	0.66	11.88	1.46	0.08	1.38	0.99
20	6.97	1.77	0.06	3.96	0.35	13.11	0.00	0.66	0.66	12.45	1.36	0.07	1.29	0.91
21	6.97	1.77	0.06	3.96	0.36	13.12	0.00	0.66	0.66	12.47	1.21	0.06	1.15	0.80
22	6.97	1.78	0.06	3.96	0.37	13.14	0.00	0.66	0.66	12.49	1.09	0.05	1.03	0.70
23	6.97	1.78	0.06	3.96	0.39	13.16	0.00	0.66	0.66	12.50	0.97	0.05	0.92	0.61
24	6.97	1.79	0.06	3.96	0.40	13.17	0.00	0.66	0.66	12.52	0.87	0.04	0.82	0.54
25	6.97	1.79	0.06	3.96	0.41	13.20	0.00	0.66	0.66	12.54	0.78	0.04	0.74	0.47
26	6.97	1.80	0.06	3.96	0.42	13.21	0.00	0.66	0.66	12.56	0.69	0.03	0.66	0.42
27	6.97	1.81	0.06	3.96	0.44	13.23	0.00	0.66	0.66	12.58	0.62	0.03	0.59	0.37
28	6.97	1.81	0.06	3.96	0.46	13.26	0.00	0.66	0.66	12.60	0.56	0.03	0.53	0.32
29	6.97	1.82	0.06	3.96	0.47	13.28	0.00	0.66	0.66	12.62	0.50	0.02	0.47	0.28
30	6.97	1.82	0.06	3.96	0.48	13.30	0.00	0.66	0.66	12.64	0.44	0.02	0.42	0.25
TOTAL	142.79	42.14	1.51	86.11	8.77	281.32	54.41	17.68	72.09	209.23	45.23	44.46	0.77	-6.06

* Benefits decreased by 45%

NET PRESENT WORTH = Rs. 0.76668 million

B/C RATIO = 1.02 : 1

IRR = 12.22 %

695

TABLE 9.4B.5

SENSITIVITY ANALYSIS OF NASIR SYSTEM
ALT V *

(Rs.Million)

YEARS	BENEFITS: Increase in Agri. Prod.	Savings in off-Road Hauling Exp.	Canal O&M Savings	Vehicle Operating Cost(VOC) Savings	Time Savings	Total Benefits	COSTS: Capital Cost	O & M Cost	Total Cost	CASH FLOW	PRESENT WORTH: Benefits @ 12%	Costs @ 12%	CASH FLOW 12%	CASH FLOW 14%
0	0.00	0.00	0.00	0.00	0.00	0.00	0.00	0.00	0.00	0.00	0.00	0.00	0.00	0.00
1	0.00	0.00	0.00	0.00	0.00	0.00	27.69	0.00	27.69	-27.69	0.00	24.73	-24.73	-24.29
2	0.11	0.27	0.02	0.45	0.05	0.90	24.57	0.10	24.67	-23.77	0.72	19.66	-18.95	-18.29
3	0.54	0.66	0.04	1.10	0.13	2.46	19.20	0.23	19.43	-16.97	1.75	13.83	-12.08	-11.45
4	1.38	1.17	0.06	1.97	0.22	4.80	19.04	0.39	19.43	-14.63	3.05	12.35	-9.30	-8.66
5	2.61	1.74	0.09	2.93	0.33	7.69	12.89	0.56	13.45	-5.75	4.36	7.63	-3.26	-2.99
6	3.85	2.14	0.10	3.61	0.40	10.10	0.00	0.66	0.66	9.45	5.12	0.33	4.79	4.30
7	4.63	2.21	0.10	3.79	0.41	11.14	0.00	0.66	0.66	10.49	5.04	0.30	4.74	4.19
8	5.42	2.29	0.10	3.98	0.42	12.21	0.00	0.66	0.66	11.55	4.93	0.26	4.67	4.05
9	6.21	2.37	0.10	4.18	0.44	13.30	0.00	0.66	0.66	12.64	4.79	0.24	4.56	3.89
10	7.00	2.45	0.10	4.38	0.45	14.39	0.00	0.66	0.66	13.73	4.63	0.21	4.42	3.70
11	7.56	2.52	0.10	4.60	0.47	15.26	0.00	0.66	0.66	14.60	4.39	0.19	4.20	3.45
12	8.13	2.60	0.10	4.83	0.48	16.14	0.00	0.66	0.66	15.48	4.14	0.17	3.97	3.21
13	8.70	2.67	0.10	5.08	0.50	17.05	0.00	0.66	0.66	16.39	3.91	0.15	3.76	2.98
14	9.27	2.75	0.10	5.33	0.52	17.97	0.00	0.66	0.66	17.31	3.68	0.13	3.54	2.77
15	9.83	2.82	0.10	5.60	0.54	18.90	0.00	0.66	0.66	18.24	3.45	0.12	3.33	2.56
16	10.40	2.90	0.10	5.89	0.55	19.84	0.00	0.66	0.66	19.19	3.24	0.11	3.13	2.36
17	10.97	2.98	0.10	6.19	0.57	20.81	0.00	0.66	0.66	20.16	3.03	0.10	2.94	2.17
18	11.53	3.06	0.10	6.51	0.59	21.79	0.00	0.66	0.66	21.14	2.83	0.09	2.75	2.00
19	12.10	3.14	0.10	6.85	0.61	22.80	0.00	0.66	0.66	22.14	2.65	0.08	2.57	1.84
20	12.67	3.22	0.10	7.21	0.63	23.83	0.00	0.66	0.66	23.17	2.47	0.07	2.40	1.69
21	12.67	3.23	0.10	7.21	0.65	23.86	0.00	0.66	0.66	23.20	2.21	0.06	2.15	1.48
22	12.67	3.24	0.10	7.21	0.68	23.90	0.00	0.66	0.66	23.24	1.97	0.05	1.92	1.30
23	12.67	3.24	0.10	7.21	0.70	23.92	0.00	0.66	0.66	23.27	1.77	0.05	1.72	1.14
24	12.67	3.25	0.10	7.21	0.72	23.95	0.00	0.66	0.66	23.30	1.58	0.04	1.53	1.00
25	12.67	3.26	0.10	7.21	0.75	23.99	0.00	0.66	0.66	23.34	1.41	0.04	1.37	0.88
26	12.67	3.27	0.10	7.21	0.77	24.02	0.00	0.66	0.66	23.37	1.26	0.03	1.23	0.77
27	12.67	3.28	0.10	7.21	0.80	24.06	0.00	0.66	0.66	23.41	1.13	0.03	1.10	0.68
28	12.67	3.29	0.10	7.21	0.83	24.10	0.00	0.66	0.66	23.45	1.01	0.03	0.98	0.60
29	12.67	3.30	0.10	7.21	0.86	24.14	0.00	0.66	0.66	23.49	0.90	0.02	0.88	0.53
30	12.67	3.32	0.10	7.21	0.88	24.18	0.00	0.66	0.66	23.52	0.81	0.02	0.79	0.46
TOTAL	259.61	76.62	2.75	156.57	15.95	511.50	103.38	17.68	121.06	390.44	82.23	81.12	1.11	-11.67

* Costs increased by 90%

NET PRESENT WORTH = Rs. 1.11192 million

B/C RATIO = 1.01 : 1

IRR = 12.17 %

696

TABLE 9.49.1

SENSITIVITY ANALYSIS OF JAMRAO & MITHRAO SYSTEM
ALT I *

(Rs.Million)

YEARS	BENEFITS: Increase in Agri. Prod.	Savings in off-Road Hauling Exp.	Canal O&M Savings	Vehicle Operating Cost(VOC) Savings	Time Savings	Total Benefits	COSTS: Capital Cost	O & M Cost	Total Cost	CASH FLOW	PRESENT WORTH: Benefits @ 12%	Costs @ 12%	CASH FLOW 12%	CASH FLOW 14%
0	0.00	0.00	0.00	0.00	0.00	0.00	0.00	0.00	0.00	0.00	0.00	0.00	0.00	0.00
1	0.00	0.00	0.00	0.00	0.00	0.00	77.55	0.00	77.55	-77.55	0.00	69.24	-69.24	-68.03
2	0.13	0.23	0.12	2.80	0.73	4.00	68.81	0.51	69.32	-65.32	3.19	55.26	-52.07	-50.26
3	0.62	0.55	0.28	6.79	1.76	10.00	53.76	1.19	54.95	-44.95	7.12	39.11	-31.99	-30.34
4	1.60	0.98	0.48	12.13	3.12	18.31	53.32	2.04	55.36	-37.06	11.63	35.18	-23.55	-21.94
5	3.01	1.43	0.67	17.90	4.59	27.61	36.09	2.89	38.99	-11.37	15.67	22.12	-6.45	-5.91
6	4.42	1.75	0.79	21.94	5.59	34.49	0.00	3.40	3.40	31.09	17.48	1.72	15.75	14.16
7	5.29	1.81	0.79	22.87	5.79	36.55	0.00	3.40	3.40	33.14	16.53	1.54	14.99	13.24
8	6.17	1.88	0.79	23.83	5.98	38.66	0.00	3.40	3.40	35.25	15.61	1.37	14.24	12.36
9	7.04	1.94	0.79	24.85	6.19	40.82	0.00	3.40	3.40	37.42	14.72	1.23	13.49	11.51
10	7.91	2.01	0.79	25.91	6.41	43.04	0.00	3.40	3.40	39.64	13.86	1.10	12.76	10.69
11	8.53	2.09	0.79	27.03	6.63	45.07	0.00	3.40	3.40	41.67	12.96	0.98	11.98	9.86
12	9.14	2.17	0.79	28.20	6.86	47.17	0.00	3.40	3.40	43.76	12.11	0.87	11.23	9.08
13	9.76	2.25	0.79	29.43	7.11	49.33	0.00	3.40	3.40	45.93	11.31	0.78	10.53	8.36
14	10.37	2.33	0.79	30.72	7.36	51.57	0.00	3.40	3.40	48.17	10.55	0.70	9.86	7.69
15	10.98	2.42	0.79	32.07	7.61	53.87	0.00	3.40	3.40	50.47	9.84	0.62	9.22	7.07
16	11.58	2.51	0.79	33.49	7.88	56.25	0.00	3.40	3.40	52.85	9.18	0.56	8.62	6.49
17	12.19	2.60	0.79	34.99	8.15	58.72	0.00	3.40	3.40	55.32	8.55	0.50	8.06	5.96
18	12.79	2.70	0.79	36.56	8.44	61.28	0.00	3.40	3.40	57.87	7.97	0.44	7.53	5.47
19	13.40	2.80	0.79	38.21	8.24	63.43	0.00	3.40	3.40	60.03	7.36	0.40	6.97	4.98
20	13.99	2.90	0.79	39.94	9.04	66.67	0.00	3.40	3.40	63.26	6.91	0.35	6.56	4.60
21	13.99	3.02	0.79	39.94	9.36	67.10	0.00	3.40	3.40	63.70	6.21	0.32	5.90	4.07
22	13.99	3.14	0.79	39.94	9.69	67.56	0.00	3.40	3.40	64.15	5.58	0.28	5.30	3.59
23	13.99	2.97	0.79	39.94	10.02	67.72	0.00	3.40	3.40	64.31	5.00	0.25	4.75	3.16
24	13.99	3.40	0.79	39.94	10.37	68.50	0.00	3.40	3.40	65.09	4.51	0.22	4.29	2.80
25	13.99	3.53	0.79	39.94	10.74	69.00	0.00	3.40	3.40	65.59	4.06	0.20	3.86	2.48
26	13.99	3.68	0.79	39.94	11.12	69.52	0.00	3.40	3.40	66.12	3.65	0.18	3.47	2.19
27	13.99	3.82	0.79	39.94	11.51	70.05	0.00	3.40	3.40	66.65	3.28	0.16	3.13	1.94
28	13.99	3.97	0.79	39.94	11.91	70.61	0.00	3.40	3.40	67.21	2.96	0.14	2.81	1.71
29	13.99	4.13	0.79	39.94	12.32	71.17	0.00	3.40	3.40	67.77	2.66	0.13	2.53	1.52
30	13.99	4.29	0.79	39.94	12.76	71.77	0.00	3.40	3.40	68.37	2.40	0.11	2.28	1.34
TOTAL	288.84	73.28	21.37	889.05	227.28	1499.83	289.53	91.74	381.26	1118.57	252.85	236.07	16.79	-20.13

* Benefits increased by 10%

NET PRESENT WORTH = Rs. 16.7869 million

B/C RATIO = 1.07 : 1

IRR = 12.91 %

697

TABLE 9.49.2

SENSITIVITY ANALYSIS OF JAMRAO & MITHRAO SYSTEM
ALT II *

(Rs.Million)

YEARS	BENEFITS: Increase in Agri. Prod.	BENEFITS: Savings in off-Road Hauling Exp.	BENEFITS: Canal O&M Savings	BENEFITS: Vehicle Operating Cost(VOC) Savings	BENEFITS: Time Savings	BENEFITS: Total Benefits	COSTS: Capital Cost	COSTS: O & M Cost	COSTS: Total Cost	CASH FLOW	PRESENT WORTH: Benefits @ 12%	PRESENT WORTH: Costs @ 12%	PRESENT WORTH: CASH FLOW 12%	PRESENT WORTH: CASH FLOW 14%
0	0.00	0.00	0.00	0.00	0.00	0.00	0.00	0.00	0.00	0.00	0.00	0.00	0.00	0.00
1	0.00	0.00	0.00	0.00	0.00	0.00	69.80	0.00	69.80	-69.80	0.00	55.64	0.00	0.00
2	0.12	0.21	0.11	2.54	0.66	3.64	61.93	0.51	62.44	-58.80	2.59	44.44	-55.64	-53.71
3	0.56	0.50	0.25	6.18	1.60	9.09	48.38	1.19	49.57	-40.48	5.78	31.50	-41.85	-39.69
4	1.45	0.89	0.43	11.03	2.84	16.64	47.99	2.04	50.03	-33.39	9.44	28.39	-25.73	-23.97
5	2.74	1.30	0.61	16.27	4.17	25.10	32.48	2.89	35.38	-10.28	12.72	17.92	-18.95	-17.34
6	4.02	1.59	0.72	19.95	5.08	31.36	0.00	3.40	3.40	27.95	14.18	1.54	-5.21	-4.68
7	4.81	1.65	0.72	20.79	5.26	33.22	0.00	3.40	3.40	29.82	13.42	1.37	12.64	11.17
8	5.61	1.71	0.72	21.67	5.44	35.14	0.00	3.40	3.40	31.74	12.67	1.23	12.04	10.65
9	6.40	1.77	0.72	22.59	5.63	37.11	0.00	3.40	3.40	33.71	11.95	1.10	11.45	9.76
10	7.19	1.83	0.72	23.56	5.83	39.13	0.00	3.40	3.40	35.73	11.25	0.98	10.85	9.09
11	7.75	1.90	0.72	24.57	6.03	40.97	0.00	3.40	3.40	37.57	10.52	0.87	10.27	8.45
12	8.31	1.97	0.72	25.64	6.24	42.88	0.00	3.40	3.40	39.47	9.83	0.78	9.64	7.80
13	8.87	2.04	0.72	26.75	6.46	44.85	0.00	3.40	3.40	41.44	9.18	0.70	9.05	7.19
14	9.43	2.12	0.72	27.93	6.69	46.89	0.00	3.40	3.40	43.48	8.57	0.62	8.48	6.62
15	9.98	2.20	0.72	29.16	6.92	48.98	0.00	3.40	3.40	45.57	7.99	0.56	7.94	6.09
16	10.53	2.28	0.72	30.45	7.16	51.14	0.00	3.40	3.40	47.74	7.45	0.50	7.43	5.60
17	11.08	2.37	0.72	31.81	7.41	53.38	0.00	3.40	3.40	49.98	6.94	0.44	6.95	5.15
18	11.63	2.45	0.72	33.23	7.67	55.71	0.00	3.40	3.40	52.30	6.47	0.40	6.50	4.73
19	12.18	2.54	0.72	34.73	7.49	57.67	0.00	3.40	3.40	54.26	5.98	0.35	6.07	4.34
20	12.72	2.64	0.72	36.31	8.22	60.61	0.00	3.40	3.40	57.20	5.61	0.32	5.63	3.95
21	12.72	2.74	0.72	36.31	8.51	61.00	0.00	3.40	3.40	57.60	5.04	0.28	5.29	3.65
22	12.72	2.86	0.72	36.31	8.81	61.42	0.00	3.40	3.40	58.01	4.53	0.25	4.76	3.22
23	12.72	2.70	0.72	36.31	9.11	61.56	0.00	3.40	3.40	58.16	4.06	0.22	4.28	2.85
24	12.72	3.09	0.72	36.31	9.43	62.27	0.00	3.40	3.40	58.87	3.66	0.20	3.83	2.51
25	12.72	3.21	0.72	36.31	9.76	62.72	0.00	3.40	3.40	59.32	3.29	0.18	3.46	2.22
26	12.72	3.34	0.72	36.31	10.11	63.20	0.00	3.40	3.40	59.80	2.96	0.16	3.12	1.97
27	12.72	3.47	0.72	36.31	10.46	63.68	0.00	3.40	3.40	60.28	2.67	0.14	2.80	1.74
28	12.72	3.61	0.72	36.31	10.83	64.19	0.00	3.40	3.40	60.79	2.40	0.13	2.52	1.54
29	12.72	3.75	0.72	36.31	11.20	64.70	0.00	3.40	3.40	61.30	2.16	0.11	2.27	1.36
30	12.72	3.90	0.72	36.31	11.60	65.25	0.00	3.40	3.40	61.84	0.00	0.00	2.05	1.20
TOTAL	262.58	66.62	19.43	808.23	206.62	1363.48	260.57	91.74	352.31	1011.17	203.29	191.32	11.97	-16.74

* Costs decreased by 10%

NET PRESENT WORTH = Rs. 11.9717 million

B/C RATIO = 1.06 : 1

IRR = 12.83 %

698

TABLE 9.49.3

SENSITIVITY ANALYSIS OF JAMRAO & MITHRAO SYSTEM
ALT III *

(Rs.Million)

YEARS	BENEFITS: Increase in Agri. Prod.	Savings in off-Road Hauling Exp.	Canal O&M Savings	Vehicle Operating Cost(VOC) Savings	Time Savings	Total Benefits	COSTS: Capital Cost	O & M Cost	Total Cost	CASH FLOW	PRESENT WORTH: Benefits @ 12%	Costs @ 12%	CASH FLOW 14%	CASH FLOW 16%
0	0.00	0.00	0.00	0.00	0.00	0.00	0.00	0.00	0.00	0.00	0.00	0.00	0.00	0.00
1	0.00	0.00	0.00	0.00	0.00	0.00	69.80	0.00	69.80	-69.80	0.00	62.32	-61.22	-60.17
2	0.13	0.23	0.12	2.80	0.73	4.00	61.93	0.51	62.44	-58.44	3.19	49.77	-44.97	-43.43
3	0.62	0.55	0.28	6.79	1.76	10.00	48.38	1.19	49.57	-39.57	7.12	35.28	-26.71	-25.35
4	1.60	0.98	0.48	12.13	3.12	18.31	47.99	2.04	50.03	-31.73	11.63	31.80	-18.78	-17.52
5	3.01	1.43	0.67	17.90	4.59	27.61	32.48	2.89	35.38	-7.77	15.67	20.07	-4.03	-3.70
6	4.42	1.75	0.79	21.94	5.59	34.49	0.00	3.40	3.40	31.09	17.48	1.72	14.16	12.76
7	5.29	1.81	0.79	22.87	5.79	36.55	0.00	3.40	3.40	33.14	16.53	1.54	13.24	11.73
8	6.17	1.88	0.79	23.83	5.98	38.66	0.00	3.40	3.40	35.25	15.61	1.37	12.36	10.75
9	7.04	1.94	0.79	24.85	6.19	40.82	0.00	3.40	3.40	37.42	14.72	1.23	11.51	9.84
10	7.91	2.01	0.79	25.91	6.41	43.04	0.00	3.40	3.40	39.64	13.86	1.10	10.69	8.99
11	8.53	2.09	0.79	27.03	6.63	45.07	0.00	3.40	3.40	41.67	12.96	0.98	9.86	8.14
12	9.14	2.17	0.79	28.20	6.86	47.17	0.00	3.40	3.40	43.76	12.11	0.87	9.08	7.37
13	9.76	2.25	0.79	29.43	7.11	49.33	0.00	3.40	3.40	45.93	11.31	0.78	8.36	6.67
14	10.37	2.33	0.79	30.72	7.36	51.57	0.00	3.40	3.40	48.17	10.55	0.70	7.69	6.03
15	10.98	2.42	0.79	32.07	7.61	53.87	0.00	3.40	3.40	50.47	9.84	0.62	7.07	5.45
16	11.58	2.51	0.79	33.49	7.88	56.25	0.00	3.40	3.40	52.85	9.18	0.56	6.49	4.92
17	12.19	2.60	0.79	34.99	8.15	58.72	0.00	3.40	3.40	55.32	8.55	0.50	5.96	4.44
18	12.79	2.70	0.79	36.56	8.44	61.28	0.00	3.40	3.40	57.87	7.97	0.44	5.47	4.00
19	13.40	2.80	0.79	38.21	8.24	63.43	0.00	3.40	3.40	60.03	7.36	0.40	4.98	3.58
20	13.99	2.90	0.79	39.94	9.04	66.67	0.00	3.40	3.40	63.26	6.91	0.35	4.60	3.25
21	13.99	3.02	0.79	39.94	9.36	67.10	0.00	3.40	3.40	63.70	6.21	0.32	4.07	2.82
22	13.99	3.14	0.79	39.94	9.69	67.56	0.00	3.40	3.40	64.15	5.58	0.28	3.59	2.45
23	13.99	2.97	0.79	39.94	10.02	67.72	0.00	3.40	3.40	64.31	5.00	0.25	3.16	2.12
24	13.99	3.40	0.79	39.94	10.37	68.50	0.00	3.40	3.40	65.09	4.51	0.22	2.80	1.85
25	13.99	3.53	0.79	39.94	10.74	69.00	0.00	3.40	3.40	65.59	4.06	0.20	2.48	1.60
26	13.99	3.68	0.79	39.94	11.12	69.52	0.00	3.40	3.40	66.12	3.65	0.18	2.19	1.39
27	13.99	3.82	0.79	39.94	11.51	70.05	0.00	3.40	3.40	66.65	3.28	0.16	1.94	1.21
28	13.99	3.97	0.79	39.94	11.91	70.61	0.00	3.40	3.40	67.21	2.96	0.14	1.71	1.05
29	13.99	4.13	0.79	39.94	12.32	71.17	0.00	3.40	3.40	67.77	2.66	0.13	1.52	0.92
30	13.99	4.29	0.79	39.94	12.76	71.77	0.00	3.40	3.40	68.37	2.40	0.11	1.34	0.80
TOTAL	288.84	73.28	21.37	889.05	227.28	1499.83	260.57	91.74	352.31	1147.52	252.85	214.39	0.63	-26.04

* Benefits increased & Capital Cost decreased by 10%

NET PRESENT WORTH = Rs. 38.4592 million

B/C RATIO = 1.18 : 1

IRR = 14.05 %

699

TABLE 9.49.4

SENSITIVITY ANALYSIS OF JAMRAO & MITHRAO SYSTEM
ALT IV *

(Rs.Million)

YEARS	BENEFITS: Increase in Agri. Prod.	BENEFITS: Savings in off-Road Hauling Exp.	BENEFITS: Canal O&M Savings	BENEFITS: Vehicle Operating Cost(VOC) Savings	BENEFITS: Time Savings	BENEFITS: Total Benefits	COSTS: Capital Cost	COSTS: O & M Cost	COSTS: Total Cost	CASH FLOW	PRESENT WORTH: Benefits @ 12%	PRESENT WORTH: Costs @ 12%	PRESENT WORTH: CASH FLOW 12%	PRESENT WORTH: CASH FLOW 14%
0	0.00	0.00	0.00	0.00	0.00	0.00	0.00	0.00	0.00	0.00	0.00	0.00	0.00	0.00
1	0.00	0.00	0.00	0.00	0.00	0.00	77.55	0.00	77.55	-77.55	0.00	69.24	-69.24	-68.03
2	0.12	0.21	0.11	2.61	0.68	3.74	68.81	0.51	69.32	-65.58	2.98	55.26	-52.28	-50.46
3	0.58	0.51	0.26	6.35	1.64	9.34	53.76	1.19	54.95	-45.61	6.65	39.11	-32.46	-30.78
4	1.49	0.91	0.44	11.33	2.92	17.10	53.32	2.04	55.36	-38.26	10.87	35.18	-24.32	-22.66
5	2.82	1.34	0.63	16.72	4.28	25.79	36.09	2.89	38.99	-13.19	14.63	22.12	-7.49	-6.85
6	4.13	1.63	0.74	20.50	5.22	32.22	0.00	3.40	3.40	28.82	16.32	1.72	14.60	13.13
7	4.94	1.69	0.74	21.36	5.40	34.14	0.00	3.40	3.40	30.73	15.44	1.54	13.90	12.28
8	5.76	1.75	0.74	22.26	5.59	36.11	0.00	3.40	3.40	32.71	14.58	1.37	13.21	11.47
9	6.58	1.82	0.74	23.21	5.78	38.13	0.00	3.40	3.40	34.73	13.75	1.23	12.52	10.68
10	7.39	1.88	0.74	24.21	5.99	40.21	0.00	3.40	3.40	36.80	12.95	1.10	11.85	9.93
11	7.96	1.95	0.74	25.25	6.20	42.10	0.00	3.40	3.40	38.70	12.10	0.98	11.12	9.16
12	8.54	2.03	0.74	26.34	6.41	44.06	0.00	3.40	3.40	40.65	11.31	0.87	10.43	8.44
13	9.11	2.10	0.74	27.49	6.64	46.08	0.00	3.40	3.40	42.68	10.56	0.78	9.78	7.77
14	9.69	2.18	0.74	28.69	6.87	48.18	0.00	3.40	3.40	44.77	9.86	0.70	9.16	7.15
15	10.25	2.26	0.74	29.96	7.11	50.32	0.00	3.40	3.40	46.92	9.19	0.62	8.57	6.57
16	10.82	2.34	0.74	31.29	7.36	52.55	0.00	3.40	3.40	49.14	8.57	0.56	8.02	6.04
17	11.38	2.43	0.74	32.68	7.61	54.85	0.00	3.40	3.40	51.44	7.99	0.50	7.49	5.55
18	11.95	2.52	0.74	34.15	7.88	57.24	0.00	3.40	3.40	53.83	7.44	0.44	7.00	5.09
19	12.51	2.61	0.74	35.69	7.70	59.25	0.00	3.40	3.40	55.85	6.88	0.40	6.48	4.63
20	13.07	2.71	0.74	37.31	8.45	62.27	0.00	3.40	3.40	58.87	6.46	0.35	6.10	4.28
21	13.07	2.82	0.74	37.31	8.74	62.68	0.00	3.40	3.40	59.28	5.80	0.32	5.49	3.78
22	13.07	2.93	0.74	37.31	9.05	63.10	0.00	3.40	3.40	59.70	5.22	0.28	4.93	3.34
23	13.07	2.77	0.74	37.31	9.36	63.25	0.00	3.40	3.40	59.85	4.67	0.25	4.42	2.94
24	13.07	3.17	0.74	37.31	9.69	63.98	0.00	3.40	3.40	60.58	4.22	0.22	3.99	2.61
25	13.07	3.30	0.74	37.31	10.03	64.45	0.00	3.40	3.40	61.04	3.79	0.20	3.59	2.31
26	13.07	3.43	0.74	37.31	10.39	64.94	0.00	3.40	3.40	61.54	3.41	0.18	3.23	2.04
27	13.07	3.57	0.74	37.31	10.75	65.43	0.00	3.40	3.40	62.03	3.07	0.16	2.91	1.80
28	13.07	3.71	0.74	37.31	11.13	65.96	0.00	3.40	3.40	62.55	2.76	0.14	2.62	1.60
29	13.07	3.85	0.74	37.31	11.51	66.48	0.00	3.40	3.40	63.08	2.49	0.13	2.36	1.41
30	13.07	4.01	0.74	37.31	11.92	67.04	0.00	3.40	3.40	63.64	2.24	0.11	2.12	1.25
TOTAL	269.80	68.45	19.97	830.46	212.30	1400.98	289.53	91.74	381.26	1019.71	236.19	236.07	0.12	-33.54

* Benefits increased by 2.75%

NET PRESENT WORTH = Rs. 0.12164 million

B/C RATIO = 1.00 : 1

IRR = 12.01 %

700

TABLE 9.49.5

SENSITIVITY ANALYSIS OF JAMRAO & MITHRAO SYSTEM
ALT V *

(Rs.Million)

YEARS	BENEFITS: Increase in Agri. Prod.	BENEFITS: Savings in off-Road Hauling Exp.	BENEFITS: Canal O&M Savings	BENEFITS: Vehicle Operating Cost (VOC) Savings	BENEFITS: Time Savings	BENEFITS: Total Benefits	COSTS: Capital Cost	COSTS: O & M Cost	COSTS: Total Cost	CASH FLOW	PRESENT WORTH: Benefits @ 12%	PRESENT WORTH: Costs @ 12%	PRESENT WORTH: CASH FLOW 12%	PRESENT WORTH: CASH FLOW 14%
0	0.00	0.00	0.00	0.00	0.00	0.00	0.00	0.00	0.00	0.00	0.00	0.00	0.00	0.00
1	0.00	0.00	0.00	0.00	0.00	0.00	74.57	0.00	74.57	-74.57	0.00	59.44	0.00	0.00
2	0.12	0.21	0.11	2.54	0.66	3.64	66.16	0.51	66.67	-63.03	2.59	47.45	-59.44	-57.38
3	0.56	0.50	0.25	6.18	1.60	9.09	51.69	1.19	52.88	-43.79	5.78	33.60	-44.86	-42.54
4	1.45	0.89	0.43	11.03	2.84	16.64	51.27	2.04	53.31	-36.67	9.44	30.25	-27.83	-25.93
5	2.74	1.30	0.61	16.27	4.17	25.10	34.70	2.89	37.60	-12.50	12.72	19.05	-20.81	-19.04
6	4.02	1.59	0.72	19.95	5.08	31.36	0.00	3.40	3.40	27.95	14.18	1.54	-6.33	-5.69
7	4.81	1.65	0.72	20.79	5.26	33.22	0.00	3.40	3.40	29.82	13.42	1.37	12.64	11.17
8	5.61	1.71	0.72	21.67	5.44	35.14	0.00	3.40	3.40	31.74	12.67	1.23	12.04	10.45
9	6.40	1.77	0.72	22.59	5.63	37.11	0.00	3.40	3.40	33.71	11.95	1.10	11.45	9.76
10	7.19	1.83	0.72	23.56	5.83	39.13	0.00	3.40	3.40	35.73	11.25	0.98	10.85	9.09
11	7.75	1.90	0.72	24.57	6.03	40.97	0.00	3.40	3.40	37.57	10.52	0.87	10.27	8.45
12	8.31	1.97	0.72	25.64	6.24	42.88	0.00	3.40	3.40	39.47	9.83	0.78	9.64	7.80
13	8.87	2.04	0.72	26.75	6.46	44.85	0.00	3.40	3.40	41.44	9.18	0.70	9.05	7.19
14	9.43	2.12	0.72	27.93	6.69	46.89	0.00	3.40	3.40	43.48	8.57	0.62	8.48	6.62
15	9.98	2.20	0.72	29.16	6.92	48.98	0.00	3.40	3.40	45.57	7.99	0.56	7.94	6.09
16	10.53	2.28	0.72	30.45	7.16	51.14	0.00	3.40	3.40	47.74	7.45	0.50	7.43	5.60
17	11.08	2.37	0.72	31.81	7.41	53.38	0.00	3.40	3.40	49.98	6.94	0.44	6.95	5.15
18	11.63	2.45	0.72	33.23	7.67	55.71	0.00	3.40	3.40	52.30	6.47	0.40	6.50	4.73
19	12.18	2.54	0.72	34.73	7.49	57.67	0.00	3.40	3.40	54.26	5.98	0.35	6.07	4.34
20	12.72	2.64	0.72	36.31	8.22	60.61	0.00	3.40	3.40	57.20	5.61	0.32	5.63	3.95
21	12.72	2.74	0.72	36.31	8.51	61.00	0.00	3.40	3.40	57.60	5.04	0.28	5.29	3.65
22	12.72	2.86	0.72	36.31	8.81	61.42	0.00	3.40	3.40	58.01	4.53	0.25	4.76	3.22
23	12.72	2.70	0.72	36.31	9.11	61.56	0.00	3.40	3.40	58.16	4.06	0.22	4.28	2.85
24	12.72	3.09	0.72	36.31	9.43	62.27	0.00	3.40	3.40	58.87	3.66	0.20	3.83	2.51
25	12.72	3.21	0.72	36.31	9.76	62.72	0.00	3.40	3.40	59.32	3.29	0.18	3.46	2.22
26	12.72	3.34	0.72	36.31	10.11	63.20	0.00	3.40	3.40	59.80	2.96	0.16	3.12	1.97
27	12.72	3.47	0.72	36.31	10.46	63.68	0.00	3.40	3.40	60.28	2.67	0.14	2.80	1.74
28	12.72	3.61	0.72	36.31	10.83	64.19	0.00	3.40	3.40	60.79	2.40	0.13	2.52	1.54
29	12.72	3.75	0.72	36.31	11.20	64.70	0.00	3.40	3.40	61.30	2.16	0.11	2.27	1.36
30	12.72	3.90	0.72	36.31	11.60	65.25	0.00	3.40	3.40	61.84	0.00	0.00	2.05	1.20
TOTAL	262.58	66.62	19.43	808.23	206.62	1363.48	278.38	91.74	370.12	993.37	203.29	203.22	0.07	-27.94

* Capital Costs decreased by 3.85 %

NET PRESENT WORTH = Rs. 0.07135 million

B/C RATIO = 1.00 : 1

IRR = 12.01 %

701

TABLE 9.50.1

SENSITIVITY ANALYSIS OF GOTKI SYSTEM
ALT I *

(Rs.Million)

YEARS	BENEFITS: Increase in Agri. Prod.	BENEFITS: Savings in off-Road Hauling Exp.	BENEFITS: Canal O&M Savings	BENEFITS: Vehicle Operating Cost(VOC) Savings	BENEFITS: Time Savings	BENEFITS: Total Benefits	COSTS: Capital Cost	COSTS: O & M Cost	COSTS: Total Cost	CASH FLOW	PRESENT WORTH: Benefits @ 12%	PRESENT WORTH: Costs @ 12%	PRESENT WORTH: CASH FLOW 12%	PRESENT WORTH: CASH FLOW 14%
0	0.00	0.00	0.00	0.00	0.00	0.00	0.00	0.00	0.00	0.00	0.00	0.00	0.00	0.00
1	0.00	0.00	0.00	0.00	0.00	0.00	54.70	0.00	54.70	-54.70	0.00	48.83	-48.83	-47.98
2	0.25	0.10	0.06	1.50	0.11	2.02	48.53	0.38	48.91	-46.88	1.61	38.99	-37.38	-36.08
3	1.16	0.23	0.14	3.67	0.27	5.48	37.91	0.88	38.79	-33.32	3.90	27.61	-23.71	-22.49
4	2.98	0.40	0.25	6.58	0.48	10.69	37.61	1.51	39.12	-28.43	6.79	24.86	-18.07	-16.83
5	5.63	0.58	0.35	9.77	0.69	17.02	25.46	2.14	27.60	-10.58	9.66	15.66	-6.00	-5.49
6	8.28	0.70	0.41	12.04	0.84	22.27	0.00	2.52	2.52	19.75	11.28	1.28	10.01	9.00
7	9.94	0.70	0.41	12.62	0.86	24.54	0.00	2.52	2.52	22.02	11.10	1.14	9.96	8.80
8	11.59	0.71	0.41	13.23	0.89	26.84	0.00	2.52	2.52	24.32	10.84	1.02	9.82	8.52
9	13.25	0.72	0.41	13.87	0.92	29.17	0.00	2.52	2.52	26.65	10.52	0.91	9.61	8.19
10	14.90	0.72	0.41	14.55	0.95	31.53	0.00	2.52	2.52	29.01	10.15	0.81	9.34	7.83
11	16.56	0.73	0.41	15.26	0.97	33.93	0.00	2.52	2.52	31.42	9.76	0.72	9.03	7.43
12	18.23	0.73	0.41	16.02	1.00	36.38	0.00	2.52	2.52	33.86	9.34	0.65	8.69	7.03
13	19.88	0.74	0.41	16.81	1.03	38.87	0.00	2.52	2.52	36.35	8.91	0.58	8.33	6.62
14	21.54	0.74	0.41	17.65	1.06	41.40	0.00	2.52	2.52	38.88	8.47	0.52	7.96	6.21
15	23.19	0.74	0.41	18.54	1.09	43.97	0.00	2.52	2.52	41.46	8.03	0.46	7.57	5.81
16	24.86	0.75	0.41	19.47	1.13	46.61	0.00	2.52	2.52	44.10	7.60	0.41	7.19	5.42
17	26.51	0.75	0.41	20.46	1.16	49.30	0.00	2.52	2.52	46.78	7.18	0.37	6.81	5.04
18	28.18	0.75	0.41	21.51	1.19	52.04	0.00	2.52	2.52	49.52	6.77	0.33	6.44	4.68
19	29.84	0.75	0.41	22.61	1.22	54.84	0.00	2.52	2.52	52.32	6.37	0.29	6.07	4.34
20	31.50	0.76	0.41	23.78	1.27	57.72	0.00	2.52	2.52	55.20	5.98	0.26	5.72	4.02
21	31.50	0.74	0.41	23.78	1.31	57.74	0.00	2.52	2.52	55.22	5.34	0.23	5.11	3.52
22	31.50	0.73	0.41	23.78	1.34	57.76	0.00	2.52	2.52	55.24	4.77	0.21	4.57	3.09
23	31.50	0.71	0.41	23.78	1.39	57.79	0.00	2.52	2.52	55.27	4.26	0.19	4.08	2.71
24	31.50	0.72	0.41	23.78	1.42	57.83	0.00	2.52	2.52	55.32	3.81	0.17	3.64	2.38
25	31.50	0.74	0.41	23.78	1.47	57.90	0.00	2.52	2.52	55.38	3.41	0.15	3.26	2.09
26	31.50	0.75	0.41	23.78	1.51	57.96	0.00	2.52	2.52	55.44	3.04	0.13	2.91	1.84
27	31.50	0.77	0.41	23.78	1.56	58.02	0.00	2.52	2.52	55.50	2.72	0.12	2.60	1.61
28	31.50	0.79	0.41	23.78	1.60	58.09	0.00	2.52	2.52	55.57	2.43	0.11	2.33	1.42
29	31.50	0.81	0.41	23.78	1.65	58.15	0.00	2.52	2.52	55.63	2.17	0.09	2.08	1.24
30	31.50	0.83	0.41	23.78	1.70	58.22	0.00	2.52	2.52	55.70	1.94	0.08	1.86	1.09
TOTAL	623.26	19.90	11.08	517.76	32.06	1204.06	204.20	67.86	272.06	932.00	188.17	167.16	21.01	-8.91

* Benefits decreased by 10%

NET PRESENT WORTH = Rs. 21.0108 million

B/C RATIO = 1.13 : 1

IRR = 13.40 %

702

TABLE 9.50.2

SENSITIVITY ANALYSIS OF GOTKI SYSTEM
ALT II *

(Rs.Million)

YEARS	BENEFITS: Increase in Agri. Prod.	BENEFITS: Savings in off-Road Hauling Exp.	BENEFITS: Canal O&M Savings	BENEFITS: Vehicle Operating Cost(VOC) Savings	BENEFITS: Time Savings	BENEFITS: Total Benefits	COSTS: Capital Cost	COSTS: O & M Cost	COSTS: Total Cost	CASH FLOW	PRESENT WORTH: Benefits @ 12%	PRESENT WORTH: Costs @ 12%	PRESENT WORTH: CASH FLOW 12%	PRESENT WORTH: CASH FLOW 14%
0	0.00	0.00	0.00	0.00	0.00	0.00	0.00	0.00	0.00	0.00	0.00	0.00	0.00	0.00
1	0.00	0.00	0.00	0.00	0.00	0.00	60.16	0.00	60.16	-60.16	0.00	47.96	0.00	0.00
2	0.28	0.11	0.07	1.67	0.12	2.25	53.38	0.38	53.76	-51.51	1.60	38.26	-47.96	-46.29
3	1.29	0.26	0.16	4.08	0.30	6.08	41.70	0.88	42.58	-36.50	3.87	27.06	-36.67	-34.77
4	3.31	0.45	0.27	7.32	0.53	11.88	41.37	1.51	42.88	-31.00	6.74	24.33	-23.20	-21.61
5	6.25	0.65	0.39	10.86	0.77	18.91	28.00	2.14	30.14	-11.23	9.58	15.27	-17.59	-16.10
6	9.20	0.78	0.46	13.38	0.93	24.75	0.00	2.52	2.52	22.23	11.19	1.14	-5.69	-5.12
7	11.04	0.78	0.46	14.02	0.96	27.26	0.00	2.52	2.52	24.75	11.01	1.02	10.05	8.88
8	12.88	0.77	0.46	14.70	0.99	29.82	0.00	2.52	2.52	27.30	10.75	0.91	9.99	8.67
9	14.72	0.80	0.46	15.41	1.02	32.41	0.00	2.52	2.52	29.89	10.43	0.81	9.84	8.39
10	16.56	0.80	0.46	16.17	1.05	35.03	0.00	2.52	2.52	32.52	10.07	0.72	9.62	8.06
11	18.40	0.81	0.46	16.96	1.08	37.70	0.00	2.52	2.52	35.19	9.68	0.65	9.35	7.69
12	20.25	0.81	0.46	17.80	1.11	40.43	0.00	2.52	2.52	37.91	9.26	0.58	9.03	7.30
13	22.09	0.82	0.46	18.68	1.14	43.18	0.00	2.52	2.52	40.67	8.84	0.52	8.69	6.90
14	23.93	0.82	0.46	19.61	1.18	46.00	0.00	2.52	2.52	43.48	8.40	0.46	8.32	6.49
15	25.77	0.83	0.46	20.60	1.21	48.86	0.00	2.52	2.52	46.34	7.97	0.41	7.94	6.09
16	27.62	0.83	0.46	21.64	1.25	51.79	0.00	2.52	2.52	49.28	7.54	0.37	7.56	5.70
17	29.46	0.83	0.46	22.74	1.29	54.78	0.00	2.52	2.52	52.26	7.12	0.33	7.18	5.31
18	31.31	0.84	0.46	23.90	1.32	57.82	0.00	2.52	2.52	55.30	6.71	0.29	6.80	4.94
19	33.15	0.84	0.46	25.13	1.36	60.93	0.00	2.52	2.52	58.41	6.32	0.26	6.42	4.59
20	35.00	0.84	0.46	26.42	1.41	64.13	0.00	2.52	2.52	61.61	5.94	0.23	6.06	4.25
21	35.00	0.82	0.46	26.42	1.45	64.15	0.00	2.52	2.52	61.64	5.30	0.21	5.70	3.93
22	35.00	0.81	0.46	26.42	1.49	64.18	0.00	2.52	2.52	61.66	4.74	0.19	5.09	3.65
23	35.00	0.79	0.46	26.42	1.54	64.21	0.00	2.52	2.52	61.69	4.23	0.17	4.55	3.03
24	35.00	0.80	0.46	26.42	1.58	64.26	0.00	2.52	2.52	61.74	3.78	0.15	4.06	2.66
25	35.00	0.82	0.46	26.42	1.63	64.33	0.00	2.52	2.52	61.81	3.38	0.13	3.63	2.33
26	35.00	0.84	0.46	26.42	1.68	64.40	0.00	2.52	2.52	61.88	3.02	0.12	3.25	2.05
27	35.00	0.86	0.46	26.42	1.73	64.47	0.00	2.52	2.52	61.95	2.70	0.11	2.90	1.80
28	35.00	0.88	0.46	26.42	1.78	64.54	0.00	2.52	2.52	62.02	2.41	0.09	2.59	1.58
29	35.00	0.90	0.46	26.42	1.83	64.61	0.00	2.52	2.52	62.09	2.16	0.08	2.32	1.39
30	35.00	0.92	0.46	26.42	1.89	64.69	0.00	2.52	2.52	62.17	0.00	0.00	2.07	1.22
TOTAL	692.51	22.11	12.32	575.29	35.62	1337.84	224.62	67.86	292.48	1045.37	164.75	162.82	21.93	-7.17

* Costs increased by 10%

NET PRESENT WORTH = Rs. 21.9271 million

B/C RATIO = 1.13 : 1

IRR = 13.51 %

703

TABLE 9.50.3

SENSITIVITY ANALYSIS OF GOTKI SYSTEM
ALT III *

(Rs.Million)

YEARS	BENEFITS: Increase in Agri. Prod.	Savings in off-Road Hauling Exp.	Canal O&M Savings	Vehicle Operating Cost(VOC) Savings	Time Savings	Total Benefits	COSTS: Capital Cost	O & M Cost	Total Cost	CASH FLOW	PRESENT WORTH: Benefits @ 12%	Costs @ 12%	CASH FLOW 12%	CASH FLOW 14%
0	0.00	0.00	0.00	0.00	0.00	0.00	0.00	0.00	0.00	0.00	0.00	0.00	0.00	0.00
1	0.00	0.00	0.00	0.00	0.00	0.00	60.16	0.00	60.16	-60.16	0.00	53.72	-53.72	-52.78
2	0.25	0.10	0.06	1.50	0.11	2.02	53.38	0.38	53.76	-51.74	1.61	42.86	-41.24	-39.81
3	1.16	0.23	0.14	3.67	0.27	5.48	41.70	0.88	42.58	-37.11	3.90	30.31	-26.41	-25.05
4	2.98	0.40	0.25	6.58	0.48	10.69	41.37	1.51	42.88	-32.19	6.79	27.25	-20.46	-19.06
5	5.63	0.58	0.35	9.77	0.69	17.02	28.00	2.14	30.14	-13.12	9.66	17.10	-7.45	-6.81
6	8.28	0.70	0.41	12.04	0.84	22.27	0.00	2.52	2.52	19.75	11.28	1.28	10.01	9.00
7	9.94	0.70	0.41	12.62	0.86	24.54	0.00	2.52	2.52	22.02	11.10	1.14	9.96	8.80
8	11.59	0.71	0.41	13.23	0.89	26.84	0.00	2.52	2.52	24.32	10.84	1.02	9.82	8.52
9	13.25	0.72	0.41	13.87	0.92	29.17	0.00	2.52	2.52	26.65	10.52	0.91	9.61	8.19
10	14.90	0.72	0.41	14.55	0.95	31.53	0.00	2.52	2.52	29.01	10.15	0.81	9.34	7.83
11	16.56	0.73	0.41	15.26	0.97	33.93	0.00	2.52	2.52	31.42	9.76	0.72	9.03	7.43
12	18.23	0.73	0.41	16.02	1.00	36.38	0.00	2.52	2.52	33.86	9.34	0.65	8.69	7.03
13	19.88	0.74	0.41	16.81	1.03	38.87	0.00	2.52	2.52	36.35	8.91	0.58	8.33	6.62
14	21.54	0.74	0.41	17.65	1.06	41.40	0.00	2.52	2.52	38.88	8.47	0.52	7.96	6.21
15	23.19	0.74	0.41	18.54	1.09	43.97	0.00	2.52	2.52	41.46	8.03	0.46	7.57	5.81
16	24.86	0.75	0.41	19.47	1.13	46.61	0.00	2.52	2.52	44.10	7.60	0.41	7.19	5.42
17	26.51	0.75	0.41	20.46	1.16	49.30	0.00	2.52	2.52	46.78	7.18	0.37	6.81	5.04
18	28.18	0.75	0.41	21.51	1.19	52.04	0.00	2.52	2.52	49.52	6.77	0.33	6.44	4.68
19	29.84	0.75	0.41	22.61	1.22	54.84	0.00	2.52	2.52	52.32	6.37	0.29	6.07	4.34
20	31.50	0.76	0.41	23.78	1.27	57.72	0.00	2.52	2.52	55.20	5.98	0.26	5.72	4.02
21	31.50	0.74	0.41	23.78	1.31	57.74	0.00	2.52	2.52	55.22	5.34	0.23	5.11	3.52
22	31.50	0.73	0.41	23.78	1.34	57.76	0.00	2.52	2.52	55.24	4.77	0.21	4.57	3.09
23	31.50	0.71	0.41	23.78	1.39	57.79	0.00	2.52	2.52	55.27	4.26	0.19	4.08	2.71
24	31.50	0.72	0.41	23.78	1.42	57.83	0.00	2.52	2.52	55.32	3.81	0.17	3.64	2.38
25	31.50	0.74	0.41	23.78	1.47	57.90	0.00	2.52	2.52	55.38	3.41	0.15	3.26	2.09
26	31.50	0.75	0.41	23.78	1.51	57.96	0.00	2.52	2.52	55.44	3.04	0.13	2.91	1.84
27	31.50	0.77	0.41	23.78	1.56	58.02	0.00	2.52	2.52	55.50	2.72	0.12	2.60	1.61
28	31.50	0.79	0.41	23.78	1.60	58.09	0.00	2.52	2.52	55.57	2.43	0.11	2.33	1.42
29	31.50	0.81	0.41	23.78	1.65	58.15	0.00	2.52	2.52	55.63	2.17	0.09	2.08	1.24
30	31.50	0.83	0.41	23.78	1.70	58.22	0.00	2.52	2.52	55.70	1.94	0.08	1.86	1.09
TOTAL	623.26	19.90	11.08	517.76	32.06	1204.06	224.62	67.86	292.48	911.58	188.17	182.44	5.73	-23.55

* Benefits decreased & Cost increased by 10%

NET PRESENT WORTH = Rs. 5.72588 million

B/C RATIO = 1.03 : 1

IRR = 12.39 %

704

TABLE 9.50.4

SENSITIVITY ANALYSIS OF GOTKI SYSTEM
ALT IV *

(Rs.Million)

YEARS	BENEFITS: Increase in Agri. Prod.	BENEFITS: Savings in off-Road Hauling Exp.	BENEFITS: Canal O&M Savings	BENEFITS: Vehicle Operating Cost(VOC) Savings	BENEFITS: Time Savings	BENEFITS: Total Benefits	COSTS: Capital Cost	COSTS: O & M Cost	COSTS: Total Cost	CASH FLOW	PRESENT WORTH: Benefits @ 12%	PRESENT WORTH: Costs @ 12%	PRESENT WORTH: CASH FLOW 12%	PRESENT WORTH: CASH FLOW 14%
0	0.00	0.00	0.00	0.00	0.00	0.00	0.00	0.00	0.00	0.00	0.00	0.00	0.00	0.00
1	0.00	0.00	0.00	0.00	0.00	0.00	54.70	0.00	54.70	-54.70	0.00	48.83	-48.83	-47.98
2	0.22	0.09	0.06	1.33	0.10	1.80	48.53	0.38	48.91	-47.11	1.43	38.99	-37.55	-36.25
3	1.03	0.21	0.13	3.26	0.24	4.87	37.91	0.88	38.79	-33.93	3.46	27.61	-24.15	-22.90
4	2.65	0.36	0.22	5.85	0.42	9.50	37.61	1.51	39.12	-29.61	6.04	24.86	-18.82	-17.53
5	5.00	0.52	0.31	8.69	0.62	15.13	25.46	2.14	27.60	-12.47	8.58	15.66	-7.07	-6.47
6	7.36	0.62	0.37	10.71	0.74	19.80	0.00	2.52	2.52	17.28	10.03	1.28	8.75	7.87
7	8.83	0.63	0.37	11.22	0.77	21.81	0.00	2.52	2.52	19.29	9.87	1.14	8.73	7.71
8	10.30	0.63	0.37	11.76	0.79	23.85	0.00	2.52	2.52	21.34	9.63	1.02	8.62	7.48
9	11.78	0.64	0.37	12.33	0.82	25.92	0.00	2.52	2.52	23.41	9.35	0.91	8.44	7.20
10	13.25	0.64	0.37	12.93	0.84	28.03	0.00	2.52	2.52	25.51	9.02	0.81	8.21	6.88
11	14.72	0.65	0.37	13.57	0.86	30.16	0.00	2.52	2.52	27.65	8.67	0.72	7.95	6.54
12	16.20	0.65	0.37	14.24	0.89	32.34	0.00	2.52	2.52	29.82	8.30	0.65	7.65	6.19
13	17.67	0.65	0.37	14.94	0.91	34.55	0.00	2.52	2.52	32.03	7.92	0.58	7.34	5.83
14	19.14	0.66	0.37	15.69	0.94	36.80	0.00	2.52	2.52	34.28	7.53	0.52	7.01	5.48
15	20.62	0.66	0.37	16.48	0.97	39.09	0.00	2.52	2.52	36.57	7.14	0.46	6.68	5.12
16	22.10	0.66	0.37	17.31	1.00	41.43	0.00	2.52	2.52	38.92	6.76	0.41	6.35	4.78
17	23.57	0.67	0.37	18.19	1.03	43.82	0.00	2.52	2.52	41.30	6.38	0.37	6.02	4.45
18	25.05	0.67	0.37	19.12	1.06	46.26	0.00	2.52	2.52	43.74	6.02	0.33	5.69	4.14
19	26.52	0.67	0.37	20.10	1.09	48.74	0.00	2.52	2.52	46.23	5.66	0.29	5.37	3.83
20	28.00	0.67	0.37	21.14	1.13	51.30	0.00	2.52	2.52	48.79	5.32	0.26	5.06	3.55
21	28.00	0.66	0.37	21.14	1.16	51.32	0.00	2.52	2.52	48.81	4.75	0.23	4.52	3.12
22	28.00	0.64	0.37	21.14	1.19	51.34	0.00	2.52	2.52	48.82	4.24	0.21	4.03	2.73
23	28.00	0.63	0.37	21.14	1.23	51.37	0.00	2.52	2.52	48.85	3.79	0.19	3.60	2.40
24	28.00	0.64	0.37	21.14	1.26	51.41	0.00	2.52	2.52	48.89	3.39	0.17	3.22	2.11
25	28.00	0.66	0.37	21.14	1.30	51.46	0.00	2.52	2.52	48.95	3.03	0.15	2.88	1.85
26	28.00	0.67	0.37	21.14	1.34	51.52	0.00	2.52	2.52	49.00	2.71	0.13	2.57	1.62
27	28.00	0.69	0.37	21.14	1.38	51.57	0.00	2.52	2.52	49.06	2.42	0.12	2.30	1.43
28	28.00	0.70	0.37	21.14	1.42	51.63	0.00	2.52	2.52	49.11	2.16	0.11	2.06	1.25
29	28.00	0.72	0.37	21.14	1.46	51.69	0.00	2.52	2.52	49.17	1.93	0.09	1.84	1.10
30	28.00	0.74	0.37	21.14	1.51	51.75	0.00	2.52	2.52	49.23	1.73	0.08	1.64	0.97
TOTAL	554.01	17.69	9.85	460.23	28.50	1070.27	204.20	67.86	272.06	798.22	167.26	167.16	0.10	-25.50

* Benefits decreased by 25%

NET PRESENT WORTH = Rs. 0.10311 million

B/C RATIO = 1.00 : 1

IRR = 12.01 %

705

TABLE 9.50.5

SENSITIVITY ANALYSIS OF GOTKI SYSTEM
ALT V *

(Rs.Million)

YEARS	BENEFITS: Increase in Agri. Prod.	Savings in off-Road Hauling Exp.	Canal O&M Savings	Vehicle Operating Cost (VOC) Savings	Time Savings	Total Benefits	COSTS: Capital Cost	O & M Cost	Total Cost	CASH FLOW	PRESENT WORTH: Benefits @ 12%	Costs @ 12%	CASH FLOW 12%	CASH FLOW 14%
0	0.00	0.00	0.00	0.00	0.00	0.00	0.00	0.00	0.00	0.00	0.00	0.00	0.00	0.00
1	0.00	0.00	0.00	0.00	0.00	0.00	69.46	0.00	69.46	-69.46	0.00	62.02	-62.02	-60.93
2	0.28	0.11	0.07	1.67	0.12	2.25	61.63	0.38	62.01	-59.76	1.79	49.43	-47.64	-45.98
3	1.29	0.26	0.16	4.08	0.30	6.08	48.15	0.88	49.03	-42.95	4.33	34.90	-30.57	-28.99
4	3.31	0.45	0.27	7.32	0.53	11.88	47.76	1.51	49.27	-37.39	7.55	31.31	-23.76	-22.14
5	6.25	0.65	0.39	10.86	0.77	18.91	32.33	2.14	34.47	-15.56	10.73	19.56	-8.83	-8.08
6	9.20	0.78	0.46	13.38	0.93	24.75	0.00	2.52	2.52	22.23	12.54	1.28	11.26	10.13
7	11.04	0.78	0.46	14.02	0.96	27.26	0.00	2.52	2.52	24.75	12.33	1.14	11.19	9.89
8	12.88	0.79	0.46	14.70	0.99	29.82	0.00	2.52	2.52	27.30	12.04	1.02	11.03	9.57
9	14.72	0.80	0.46	15.41	1.02	32.41	0.00	2.52	2.52	29.89	11.69	0.91	10.78	9.19
10	16.56	0.80	0.46	16.17	1.05	35.03	0.00	2.52	2.52	32.52	11.28	0.81	10.47	8.77
11	18.40	0.81	0.46	16.96	1.08	37.70	0.00	2.52	2.52	35.19	10.84	0.72	10.12	8.33
12	20.25	0.81	0.46	17.80	1.11	40.43	0.00	2.52	2.52	37.91	10.38	0.65	9.73	7.87
13	22.09	0.82	0.46	18.68	1.14	43.18	0.00	2.52	2.52	40.67	9.90	0.58	9.32	7.40
14	23.93	0.82	0.46	19.61	1.18	46.00	0.00	2.52	2.52	43.48	9.41	0.52	8.90	6.94
15	25.77	0.83	0.46	20.60	1.21	48.86	0.00	2.52	2.52	46.34	8.93	0.46	8.47	6.49
16	27.62	0.83	0.46	21.64	1.25	51.79	0.00	2.52	2.52	49.28	8.45	0.41	8.04	6.06
17	29.46	0.83	0.46	22.74	1.29	54.78	0.00	2.52	2.52	52.26	7.98	0.37	7.61	5.63
18	31.31	0.84	0.46	23.90	1.32	57.82	0.00	2.52	2.52	55.30	7.52	0.33	7.19	5.23
19	33.15	0.84	0.46	25.13	1.36	60.93	0.00	2.52	2.52	58.41	7.07	0.29	6.78	4.85
20	35.00	0.84	0.46	26.42	1.41	64.13	0.00	2.52	2.52	61.61	6.65	0.26	6.39	4.48
21	35.00	0.82	0.46	26.42	1.45	64.15	0.00	2.52	2.52	61.64	5.94	0.23	5.71	3.93
22	35.00	0.81	0.46	26.42	1.49	64.18	0.00	2.52	2.52	61.66	5.30	0.21	5.10	3.45
23	35.00	0.79	0.46	26.42	1.54	64.21	0.00	2.52	2.52	61.69	4.74	0.19	4.55	3.03
24	35.00	0.80	0.46	26.42	1.58	64.26	0.00	2.52	2.52	61.74	4.23	0.17	4.07	2.66
25	35.00	0.82	0.46	26.42	1.63	64.33	0.00	2.52	2.52	61.81	3.78	0.15	3.64	2.34
26	35.00	0.84	0.46	26.42	1.68	64.40	0.00	2.52	2.52	61.88	3.38	0.13	3.25	2.05
27	35.00	0.86	0.46	26.42	1.73	64.47	0.00	2.52	2.52	61.95	3.02	0.12	2.91	1.80
28	35.00	0.88	0.46	26.42	1.78	64.54	0.00	2.52	2.52	62.02	2.70	0.11	2.60	1.58
29	35.00	0.90	0.46	26.42	1.83	64.61	0.00	2.52	2.52	62.09	2.42	0.09	2.32	1.39
30	35.00	0.92	0.46	26.42	1.89	64.69	0.00	2.52	2.52	62.17	2.16	0.08	2.08	1.22
TOTAL	692.51	22.11	12.32	575.29	35.62	1337.84	259.33	67.86	327.19	1010.65	209.08	208.43	0.65	-31.84

* Costs increased by 27%

NET PRESENT WORTH = Rs. 0.64917 million

B/C RATIO = 1.00 : 1

IRR = 12.04 %

706

TABLE 9.51.1

SENSITIVITY ANALYSIS OF ROHRI SYSTEM
ALT I *

(Rs.Million)

YEARS	BENEFITS: Increase in Agri. Prod.	BENEFITS: Savings in off-Road Hauling Exp.	BENEFITS: Canal O&M Savings	BENEFITS: Vehicle Operating Cost(VOC) Savings	BENEFITS: Time Savings	BENEFITS: Total Benefits	COSTS: Capital Cost	COSTS: O & M Cost	COSTS: Total Cost	CASH FLOW	PRESENT WORTH: Benefits @ 12%	PRESENT WORTH: Costs @ 12%	PRESENT WORTH: CASH FLOW 10%	PRESENT WORTH: CASH FLOW 12%
0	0.00	0.00	0.00	0.00	0.00	0.00	0.00	0.00	0.00	0.00	0.00	0.00	0.00	0.00
1	0.00	0.00	0.00	0.00	0.00	0.00	24.96	0.00	24.96	-24.96	0.00	22.28	-22.69	-22.28
2	0.07	0.06	0.02	0.70	0.13	0.98	22.14	0.17	22.32	-21.34	0.78	17.79	-17.63	-17.01
3	0.32	0.13	0.05	1.72	0.31	2.52	17.30	0.40	17.70	-15.18	1.80	12.60	-11.40	-10.80
4	0.81	0.24	0.08	3.09	0.54	4.75	17.16	0.69	17.85	-13.10	3.02	11.34	-8.94	-8.32
5	1.54	0.35	0.11	4.58	0.78	7.36	11.62	0.98	12.59	-5.23	4.18	7.15	-3.25	-2.97
6	2.26	0.42	0.13	5.64	0.95	9.41	0.00	1.15	1.15	8.26	4.77	0.58	4.66	4.18
7	2.71	0.43	0.13	5.91	0.98	10.16	0.00	1.15	1.15	9.01	4.60	0.52	4.63	4.08
8	3.16	0.43	0.13	6.19	1.00	10.92	0.00	1.15	1.15	9.77	4.41	0.46	4.56	3.95
9	3.61	0.44	0.13	6.49	1.03	11.70	0.00	1.15	1.15	10.55	4.22	0.41	4.48	3.81
10	4.06	0.45	0.13	6.81	1.06	12.51	0.00	1.15	1.15	11.36	4.03	0.37	4.38	3.66
11	4.51	0.46	0.13	7.14	1.09	13.32	0.00	1.15	1.15	12.17	3.83	0.33	4.27	3.50
12	4.96	0.46	0.13	7.48	1.12	14.15	0.00	1.15	1.15	13.00	3.63	0.30	4.14	3.34
13	5.41	0.47	0.13	7.85	1.14	15.00	0.00	1.15	1.15	13.85	3.44	0.26	4.01	3.17
14	5.86	0.47	0.13	8.24	1.18	15.88	0.00	1.15	1.15	14.73	3.25	0.24	3.88	3.01
15	6.31	0.48	0.13	8.65	1.21	16.77	0.00	1.15	1.15	15.62	3.06	0.21	3.74	2.85
16	6.75	0.49	0.13	9.08	1.24	17.69	0.00	1.15	1.15	16.54	2.89	0.19	3.60	2.70
17	7.20	0.49	0.13	9.53	1.28	18.63	0.00	1.15	1.15	17.48	2.71	0.17	3.46	2.55
18	7.65	0.50	0.13	10.01	1.31	19.59	0.00	1.15	1.15	18.44	2.55	0.15	3.32	2.40
19	8.09	0.50	0.13	10.52	1.34	20.58	0.00	1.15	1.15	19.43	2.39	0.13	3.18	2.26
20	8.54	0.50	0.13	11.05	1.38	21.61	0.00	1.15	1.15	20.46	2.24	0.12	3.04	2.12
21	8.54	0.49	0.13	11.05	1.42	21.64	0.00	1.15	1.15	20.49	2.00	0.11	2.77	1.90
22	8.54	0.48	0.13	11.05	1.46	21.66	0.00	1.15	1.15	20.51	1.79	0.10	2.52	1.70
23	8.54	0.46	0.13	11.05	1.49	21.68	0.00	1.15	1.15	20.53	1.60	0.08	2.29	1.52
24	8.54	0.45	0.13	11.05	1.54	21.71	0.00	1.15	1.15	20.56	1.43	0.08	2.09	1.35
25	8.54	0.44	0.13	11.05	1.58	21.74	0.00	1.15	1.15	20.59	1.28	0.07	1.90	1.21
26	8.54	0.45	0.13	11.05	1.62	21.80	0.00	1.15	1.15	20.65	1.14	0.06	1.73	1.08
27	8.54	0.47	0.13	11.05	1.67	21.86	0.00	1.15	1.15	20.71	1.03	0.05	1.58	0.97
28	8.54	0.49	0.13	11.05	1.71	21.92	0.00	1.15	1.15	20.77	0.92	0.05	1.44	0.87
29	8.54	0.50	0.13	11.05	1.76	21.99	0.00	1.15	1.15	20.84	0.82	0.04	1.31	0.78
30	8.54	0.52	0.13	11.05	1.80	22.05	0.00	1.15	1.15	20.90	0.74	0.04	1.20	0.70
TOTAL	169.22	12.50	3.59	241.23	35.09	461.62	93.18	30.99	124.17	337.45	74.54	76.28	14.25	-1.74

* Benefits decreased by 10%

NET PRESENT WORTH = Rs. -1.7435 million

B/C RATIO = 0.98 : 1

IRR = 11.78 %

707

TABLE 9.51.2

SENSITIVITY ANALYSIS OF ROHRI SYSTEM
ALT II *

(Rs.Million)

YEARS	BENEFITS: Increase in Agri. Prod.	BENEFITS: Savings in off-Road Hauling Exp.	BENEFITS: Canal O&M Savings	BENEFITS: Vehicle Operating Cost(VOC) Savings	BENEFITS: Time Savings	BENEFITS: Total Benefits	COSTS: Capital Cost	COSTS: O & M Cost	COSTS: Total Cost	CASH FLOW	PRESENT WORTH: Benefits @ 12%	PRESENT WORTH: Costs @ 12%	PRESENT WORTH: CASH FLOW 10%	PRESENT WORTH: CASH FLOW 12%
0	0.00	0.00	0.00	0.00	0.00	0.00	0.00	0.00	0.00	0.00	0.00	0.00	0.00	0.00
1	0.00	0.00	0.00	0.00	0.00	0.00	27.45	0.00	27.45	-27.45	0.00	21.89	0.00	0.00
2	0.08	0.06	0.02	0.78	0.14	1.09	24.36	0.17	24.53	-23.44	0.77	17.46	-22.69	-21.89
3	0.35	0.15	0.05	1.91	0.34	2.80	19.03	0.40	19.43	-16.63	1.78	12.35	-17.61	-16.69
4	.90	0.26	0.09	3.43	0.60	5.28	18.88	0.69	19.57	-14.28	3.00	11.10	-11.36	-10.57
5	1.71	0.38	0.13	5.09	0.87	8.18	12.78	0.98	13.75	-5.57	4.14	6.97	-8.87	-8.10
6	2.51	0.47	0.15	6.27	1.06	10.46	0.00	1.15	1.15	9.31	4.73	0.52	-3.15	-2.82
7	3.01	0.48	0.15	6.57	1.09	11.29	0.00	1.15	1.15	10.14	4.56	0.46	4.78	4.21
8	3.51	0.48	0.15	6.88	1.11	12.13	0.00	1.15	1.15	10.98	4.38	0.41	4.73	4.10
9	4.01	0.49	0.15	7.21	1.14	13.00	0.00	1.15	1.15	11.85	4.19	0.37	4.66	3.96
10	4.51	0.50	0.15	7.56	1.18	13.90	0.00	1.15	1.15	12.75	4.00	0.33	4.57	3.82
11	5.01	0.51	0.15	7.93	1.21	14.80	0.00	1.15	1.15	13.65	3.80	0.30	4.47	3.67
12	5.51	0.51	0.15	8.32	1.24	15.73	0.00	1.15	1.15	14.58	3.60	0.26	4.35	3.50
13	6.01	0.52	0.15	8.72	1.27	16.67	0.00	1.15	1.15	15.52	3.41	0.24	4.22	3.34
14	6.51	0.53	0.15	9.15	1.31	17.65	0.00	1.15	1.15	16.50	3.22	0.21	4.09	3.18
15	7.01	0.53	0.15	9.61	1.34	18.64	0.00	1.15	1.15	17.49	3.04	0.19	3.95	3.01
16	7.50	0.54	0.15	10.09	1.38	19.65	0.00	1.15	1.15	18.50	2.86	0.17	3.81	2.85
17	8.00	0.55	0.15	10.59	1.42	20.70	0.00	1.15	1.15	19.55	2.69	0.15	3.66	2.69
18	8.50	0.55	0.15	11.12	1.45	21.77	0.00	1.15	1.15	20.62	2.53	0.13	3.52	2.54
19	8.99	0.56	0.15	11.69	1.49	22.87	0.00	1.15	1.15	21.72	2.37	0.12	3.37	2.39
20	9.49	0.56	0.15	12.28	1.53	24.01	0.00	1.15	1.15	22.86	2.22	0.11	3.23	2.25
21	9.49	0.54	0.15	12.28	1.58	24.04	0.00	1.15	1.15	22.89	1.99	0.10	3.09	2.12
22	9.49	0.53	0.15	12.28	1.62	24.07	0.00	1.15	1.15	22.92	1.78	0.08	2.81	1.89
23	9.49	0.51	0.15	12.28	1.66	24.09	0.00	1.15	1.15	22.94	1.59	0.08	2.56	1.69
24	9.49	0.50	0.15	12.28	1.71	24.13	0.00	1.15	1.15	22.98	1.42	0.07	2.33	1.51
25	9.49	0.49	0.15	12.28	1.75	24.16	0.00	1.15	1.15	23.01	1.27	0.06	2.12	1.35
26	9.49	0.50	0.15	12.28	1.80	24.22	0.00	1.15	1.15	23.07	1.14	0.05	1.93	1.21
27	9.49	0.52	0.15	12.28	1.85	24.29	0.00	1.15	1.15	23.14	1.02	0.05	1.76	1.08
28	9.49	0.54	0.15	12.28	1.90	24.36	0.00	1.15	1.15	23.21	0.91	0.04	1.60	0.97
29	9.49	0.56	0.15	12.28	1.95	24.43	0.00	1.15	1.15	23.28	0.82	0.04	1.46	0.87
30	9.49	0.58	0.15	12.28	2.00	24.50	0.00	1.15	1.15	23.35	0.00	0.00	1.33	0.78
TOTAL	188.02	13.88	3.99	268.03	38.99	512.92	102.50	30.99	133.49	379.43	73.22	74.30	14.72	-1.09

* Costs increased by 10%

NET PRESENT WORTH = Rs. -1.0852 million

B/C RATIO = 0.99 : 1

IRR = 11.86 %

708

TABLE 9.51.3

SENSITIVITY ANALYSIS OF ROHRI SYSTEM
ALT III *

(Rs.Million)

YEARS	BENEFITS: Increase in Agri. Prod.	BENEFITS: Savings in off-Road Hauling Exp.	BENEFITS: Canal O&M Savings	BENEFITS: Vehicle Operating Cost(VOC) Savings	BENEFITS: Time Savings	BENEFITS: Total Benefits	COSTS: Capital Cost	COSTS: O & M Cost	COSTS: Total Cost	CASH FLOW	PRESENT WORTH: Benefits @ 12%	PRESENT WORTH: Costs @ 12%	PRESENT WORTH: CASH FLOW 10%	PRESENT WORTH: CASH FLOW 12%
0	0.00	0.00	0.00	0.00	0.00	0.00	0.00	0.00	0.00	0.00	0.00	0.00	0.00	0.00
1	0.00	0.00	0.00	0.00	0.00	0.00	27.45	0.00	27.45	-27.45	0.00	24.51	-24.96	-24.51
2	0.07	0.06	0.02	0.70	0.13	0.98	24.36	0.17	24.53	-23.55	0.78	19.56	-19.46	-18.78
3	0.32	0.13	0.05	1.72	0.31	2.52	19.03	0.40	19.43	-16.91	1.80	13.83	-12.70	-12.04
4	0.81	0.24	0.08	3.09	0.54	4.75	18.88	0.69	19.57	-14.81	3.02	12.43	-10.12	-9.41
5	1.54	0.35	0.11	4.58	0.78	7.36	12.78	0.98	13.75	-6.39	4.18	7.80	-3.97	-3.63
6	2.26	0.42	0.13	5.64	0.95	9.41	0.00	1.15	1.15	8.26	4.77	0.58	4.66	4.18
7	2.71	0.43	0.13	5.91	0.98	10.16	0.00	1.15	1.15	9.01	4.60	0.52	4.63	4.08
8	3.16	0.43	0.13	6.19	1.00	10.92	0.00	1.15	1.15	9.77	4.41	0.46	4.56	3.95
9	3.61	0.44	0.13	6.49	1.03	11.70	0.00	1.15	1.15	10.55	4.22	0.41	4.48	3.81
10	4.06	0.45	0.13	6.81	1.06	12.51	0.00	1.15	1.15	11.36	4.03	0.37	4.38	3.66
11	4.51	0.46	0.13	7.14	1.09	13.32	0.00	1.15	1.15	12.17	3.83	0.33	4.27	3.50
12	4.96	0.46	0.13	7.48	1.12	14.15	0.00	1.15	1.15	13.00	3.63	0.30	4.14	3.34
13	5.41	0.47	0.13	7.85	1.14	15.00	0.00	1.15	1.15	13.85	3.44	0.26	4.01	3.17
14	5.86	0.47	0.13	8.24	1.18	15.88	0.00	1.15	1.15	14.73	3.25	0.24	3.88	3.01
15	6.31	0.48	0.13	8.65	1.21	16.77	0.00	1.15	1.15	15.62	3.06	0.21	3.74	2.85
16	6.75	0.49	0.13	9.08	1.24	17.69	0.00	1.15	1.15	16.54	2.89	0.19	3.60	2.70
17	7.20	0.49	0.13	9.53	1.28	18.63	0.00	1.15	1.15	17.48	2.71	0.17	3.46	2.55
18	7.65	0.50	0.13	10.01	1.31	19.59	0.00	1.15	1.15	18.44	2.55	0.15	3.32	2.40
19	8.09	0.50	0.13	10.52	1.34	20.58	0.00	1.15	1.15	19.43	2.39	0.13	3.18	2.26
20	8.54	0.50	0.13	11.05	1.38	21.61	0.00	1.15	1.15	20.46	2.24	0.12	3.04	2.12
21	8.54	0.49	0.13	11.05	1.42	21.64	0.00	1.15	1.15	20.49	2.00	0.11	2.77	1.90
22	8.54	0.48	0.13	11.05	1.46	21.66	0.00	1.15	1.15	20.51	1.79	0.10	2.52	1.70
23	8.54	0.46	0.13	11.05	1.49	21.68	0.00	1.15	1.15	20.53	1.60	0.08	2.29	1.52
24	8.54	0.45	0.13	11.05	1.54	21.71	0.00	1.15	1.15	20.56	1.43	0.08	2.09	1.35
25	8.54	0.44	0.13	11.05	1.58	21.74	0.00	1.15	1.15	20.59	1.28	0.07	1.90	1.21
26	8.54	0.45	0.13	11.05	1.62	21.80	0.00	1.15	1.15	20.65	1.14	0.06	1.73	1.08
27	8.54	0.47	0.13	11.05	1.67	21.86	0.00	1.15	1.15	20.71	1.03	0.05	1.58	0.97
28	8.54	0.49	0.13	11.05	1.71	21.92	0.00	1.15	1.15	20.77	0.92	0.05	1.44	0.87
29	8.54	0.50	0.13	11.05	1.76	21.99	0.00	1.15	1.15	20.84	0.82	0.04	1.31	0.78
30	8.54	0.52	0.13	11.05	1.80	22.05	0.00	1.15	1.15	20.90	0.74	0.04	1.20	0.70
TOTAL	169.22	12.50	3.59	241.23	35.09	461.62	102.50	30.99	133.49	328.13	74.54	83.26	6.96	-8.72

* Benefits decreased & Cost increased by 10%

NET PRESENT WORTH = Rs. -8.7184 million

B/C RATIO = 0.90 : 1

IRR = 10.89 %

709

TABLE 9.51.4

SENSITIVITY ANALYSIS OF ROHRI SYSTEM
ALT IV *

(Rs.Million)

YEARS	BENEFITS: Increase in Agri. Prod.	BENEFITS: Savings in off-Road Hauling Exp.	BENEFITS: Canal O&M Savings	BENEFITS: Vehicle Operating Cost(VOC) Savings	BENEFITS: Time Savings	BENEFITS: Total Benefits	COSTS: Capital Cost	COSTS: O & M Cost	COSTS: Total Cost	CASH FLOW	PRESENT WORTH: Benefits @ 12%	PRESENT WORTH: Costs @ 12%	PRESENT WORTH: CASH FLOW 12%	PRESENT WORTH: CASH FLOW 14%
0	0.00	0.00	0.00	0.00	0.00	0.00	0.00	0.00	0.00	0.00	0.00	0.00	0.00	0.00
1	0.00	0.00	0.00	0.00	0.00	0.00	24.96	0.00	24.96	-24.96	0.00	22.28	-22.28	-21.89
2	0.07	0.06	0.02	0.73	0.13	1.01	22.14	0.17	22.32	-21.31	0.81	17.79	-16.98	-16.39
3	0.33	0.14	0.05	1.78	0.32	2.61	17.30	0.40	17.70	-15.10	1.86	12.60	-10.74	-10.19
4	0.84	0.24	0.08	3.19	0.56	4.91	17.16	0.69	17.85	-12.94	3.12	11.34	-8.22	-7.66
5	1.59	0.36	0.12	4.73	0.81	7.61	11.62	0.98	12.59	-4.98	4.32	7.15	-2.83	-2.59
6	2.33	0.43	0.14	5.83	0.99	9.72	0.00	1.15	1.15	8.57	4.93	0.58	4.34	3.91
7	2.80	0.44	0.14	6.11	1.01	10.50	0.00	1.15	1.15	9.35	4.75	0.52	4.23	3.74
8	3.26	0.45	0.14	6.40	1.03	11.28	0.00	1.15	1.15	10.13	4.56	0.46	4.09	3.55
9	3.73	0.46	0.14	6.71	1.06	12.09	0.00	1.15	1.15	10.94	4.36	0.41	3.95	3.36
10	4.19	0.46	0.14	7.03	1.10	12.93	0.00	1.15	1.15	11.78	4.16	0.37	3.79	3.18
11	4.66	0.47	0.14	7.37	1.13	13.77	0.00	1.15	1.15	12.62	3.96	0.33	3.63	2.99
12	5.12	0.48	0.14	7.73	1.15	14.63	0.00	1.15	1.15	13.48	3.75	0.30	3.46	2.80
13	5.59	0.48	0.14	8.11	1.18	15.50	0.00	1.15	1.15	14.35	3.55	0.26	3.29	2.61
14	6.05	0.49	0.14	8.51	1.22	16.41	0.00	1.15	1.15	15.26	3.36	0.24	3.12	2.44
15	6.52	0.50	0.14	8.93	1.25	17.33	0.00	1.15	1.15	16.18	3.17	0.21	2.96	2.27
16	6.98	0.50	0.14	9.38	1.28	18.28	0.00	1.15	1.15	17.13	2.98	0.19	2.79	2.10
17	7.44	0.51	0.14	9.85	1.32	19.25	0.00	1.15	1.15	18.10	2.80	0.17	2.64	1.95
18	7.91	0.51	0.14	10.35	1.35	20.25	0.00	1.15	1.15	19.10	2.63	0.15	2.48	1.81
19	8.36	0.52	0.14	10.87	1.39	21.27	0.00	1.15	1.15	20.12	2.47	0.13	2.34	1.67
20	8.83	0.52	0.14	11.42	1.42	22.33	0.00	1.15	1.15	21.18	2.31	0.12	2.20	1.54
21	8.83	0.51	0.14	11.42	1.47	22.36	0.00	1.15	1.15	21.21	2.07	0.11	1.96	1.35
22	8.83	0.49	0.14	11.42	1.51	22.38	0.00	1.15	1.15	21.23	1.85	0.10	1.75	1.19
23	8.83	0.48	0.14	11.42	1.54	22.40	0.00	1.15	1.15	21.25	1.65	0.08	1.57	1.04
24	8.83	0.46	0.14	11.42	1.59	22.44	0.00	1.15	1.15	21.29	1.48	0.08	1.40	0.92
25	8.83	0.45	0.14	11.42	1.63	22.46	0.00	1.15	1.15	21.31	1.32	0.07	1.25	0.81
26	8.83	0.47	0.14	11.42	1.67	22.53	0.00	1.15	1.15	21.38	1.18	0.06	1.12	0.71
27	8.83	0.48	0.14	11.42	1.72	22.59	0.00	1.15	1.15	21.44	1.06	0.05	1.01	0.62
28	8.83	0.50	0.14	11.42	1.77	22.65	0.00	1.15	1.15	21.50	0.95	0.05	0.90	0.55
29	8.83	0.52	0.14	11.42	1.81	22.72	0.00	1.15	1.15	21.57	0.85	0.04	0.81	0.48
30	8.83	0.54	0.14	11.42	1.86	22.78	0.00	1.15	1.15	21.63	0.76	0.04	0.72	0.42
TOTAL	174.86	12.91	3.71	249.27	36.26	477.01	93.18	30.99	124.17	352.84	77.03	76.28	0.74	-10.72

* Benefits decreased by 8%

NET PRESENT WORTH = Rs. 0.74109 million

B/C RATIO = 1.01 : 1

IRR = 12.13 %

710

TABLE 9.51.5

SENSITIVITY ANALYSIS OF ROHRI SYSTEM
ALT V *

(Rs.Million)

YEARS	BENEFITS: Increase in Agri. Prod.	Savings in off-Road Hauling Exp.	Canal O&M Savings	Vehicle Operating Cost(VOC) Savings	Time Savings	Total Benefits	COSTS: Capital Cost	O & M Cost	Total Cost	CASH FLOW	PRESENT WORTH: Benefits @ 12%	Costs @ 12%	CASH FLOW 12%	CASH FLOW 14%
0	0.00	0.00	0.00	0.00	0.00	0.00	0.00	0.00	0.00	0.00	0.00	0.00	0.00	0.00
1	0.00	0.00	0.00	0.00	0.00	0.00	27.21	0.00	27.21	-27.21	0.00	24.29	-24.29	-23.86
2	0.08	0.06	0.02	0.78	0.14	1.09	24.14	0.17	24.31	-23.22	0.87	19.38	-18.51	-17.87
3	0.35	0.15	0.05	1.91	0.34	2.80	18.86	0.40	19.26	-16.46	2.00	13.71	-11.71	-11.11
4	0.90	0.26	0.09	3.43	0.60	5.28	18.70	0.69	19.39	-14.11	3.36	12.33	-8.97	-8.36
5	1.71	0.38	0.13	5.09	0.87	8.18	12.66	0.98	13.64	-5.46	4.64	7.74	-3.10	-2.83
6	2.51	0.47	0.15	6.27	1.06	10.46	0.00	1.15	1.15	9.31	5.30	0.58	4.71	4.24
7	3.01	0.48	0.15	6.57	1.09	11.29	0.00	1.15	1.15	10.14	5.11	0.52	4.59	4.05
8	3.51	0.48	0.15	6.88	1.11	12.13	0.00	1.15	1.15	10.98	4.90	0.46	4.44	3.85
9	4.01	0.49	0.15	7.21	1.14	13.00	0.00	1.15	1.15	11.85	4.69	0.41	4.27	3.64
10	4.51	0.50	0.15	7.56	1.18	13.90	0.00	1.15	1.15	12.75	4.48	0.37	4.10	3.44
11	5.01	0.51	0.15	7.93	1.21	14.80	0.00	1.15	1.15	13.65	4.26	0.33	3.92	3.23
12	5.51	0.51	0.15	8.32	1.24	15.73	0.00	1.15	1.15	14.58	4.04	0.30	3.74	3.03
13	6.01	0.52	0.15	8.72	1.27	16.67	0.00	1.15	1.15	15.52	3.82	0.26	3.56	2.83
14	6.51	0.53	0.15	9.15	1.31	17.65	0.00	1.15	1.15	16.50	3.61	0.24	3.38	2.63
15	7.01	0.53	0.15	9.61	1.34	18.64	0.00	1.15	1.15	17.49	3.40	0.21	3.19	2.45
16	7.50	0.54	0.15	10.09	1.38	19.65	0.00	1.15	1.15	18.50	3.21	0.19	3.02	2.27
17	8.00	0.55	0.15	10.59	1.42	20.70	0.00	1.15	1.15	19.55	3.02	0.17	2.85	2.11
18	8.50	0.55	0.15	11.12	1.45	21.77	0.00	1.15	1.15	20.62	2.83	0.15	2.68	1.95
19	8.99	0.56	0.15	11.69	1.49	22.87	0.00	1.15	1.15	21.72	2.66	0.13	2.52	1.80
20	9.49	0.56	0.15	12.28	1.53	24.01	0.00	1.15	1.15	22.86	2.49	0.12	2.37	1.66
21	9.49	0.54	0.15	12.28	1.58	24.04	0.00	1.15	1.15	22.89	2.23	0.11	2.12	1.46
22	9.49	0.53	0.15	12.28	1.62	24.07	0.00	1.15	1.15	22.92	1.99	0.10	1.89	1.28
23	9.49	0.51	0.15	12.28	1.66	24.09	0.00	1.15	1.15	22.94	1.78	0.08	1.69	1.13
24	9.49	0.50	0.15	12.28	1.71	24.13	0.00	1.15	1.15	22.98	1.59	0.08	1.51	0.99
25	9.49	0.49	0.15	12.28	1.75	24.16	0.00	1.15	1.15	23.01	1.42	0.07	1.35	0.87
26	9.49	0.50	0.15	12.28	1.80	24.22	0.00	1.15	1.15	23.07	1.27	0.06	1.21	0.76
27	9.49	0.52	0.15	12.28	1.85	24.29	0.00	1.15	1.15	23.14	1.14	0.05	1.09	0.67
28	9.49	0.54	0.15	12.28	1.90	24.36	0.00	1.15	1.15	23.21	1.02	0.05	0.97	0.59
29	9.49	0.56	0.15	12.28	1.95	24.43	0.00	1.15	1.15	23.28	0.91	0.04	0.87	0.52
30	9.49	0.58	0.15	12.28	2.00	24.50	0.00	1.15	1.15	23.35	0.82	0.04	0.78	0.46
TOTAL	188.02	13.88	3.99	268.03	38.99	512.92	101.57	30.99	132.56	380.36	82.82	82.56	0.26	-12.10

* Costs increased by 9%

NET PRESENT WORTH = Rs. 0.26133 million

B/C RATIO = 1.00 : 1

IRR = 12.04 %

711

TABLE 9.52.1

SENSITIVITY ANALYSIS OF DADU SYSTEM
ALT I *

(Rs.Million)

YEARS	BENEFITS: Increase in Agri. Prod.	Savings in off-Road Hauling Exp.	Canal O&M Savings	Vehicle Operating Cost(VOC) Savings	Time Savings	Total Benefits	COSTS: Capital Cost	O & M Cost	Total Cost	CASH FLOW	PRESENT WORTH: Benefits @ 12%	Costs @ 12%	CASH FLOW 10%	CASH FLOW 12%
0	0.00	0.00	0.00	0.00	0.00	0.00	0.00	0.00	0.00	0.00	0.00	0.00	0.00	0.00
1	0.00	0.00	0.00	0.00	0.00	0.00	25.68	0.00	25.68	-25.68	0.00	22.92	-23.34	-22.92
2	0.02	0.04	0.03	1.04	0.11	1.25	22.78	0.18	22.96	-21.71	0.99	18.30	-17.94	-17.31
3	0.12	1.02	0.07	2.53	0.28	4.02	17.80	0.42	18.22	-14.20	2.86	12.97	-10.67	-10.10
4	0.32	0.18	0.13	4.51	0.50	5.64	17.65	0.72	18.37	-12.73	3.58	11.68	-8.70	-8.09
5	0.61	0.27	0.18	6.66	0.72	8.44	11.95	1.02	12.97	-4.53	4.79	7.36	-2.81	-2.57
6	0.89	0.33	0.21	8.17	0.87	10.48	0.00	1.20	1.20	9.28	5.31	0.61	5.24	4.70
7	1.08	0.34	0.21	8.52	0.90	11.05	0.00	1.20	1.20	9.86	5.00	0.54	5.06	4.46
8	0.17	0.35	0.21	8.88	0.92	10.54	0.00	1.20	1.20	9.34	4.26	0.48	4.36	3.77
9	1.45	0.36	0.21	9.26	0.96	12.25	0.00	1.20	1.20	11.05	4.42	0.43	4.69	3.98
10	1.65	0.37	0.21	9.66	0.99	12.89	0.00	1.20	1.20	11.69	4.15	0.39	4.51	3.76
11	1.84	0.38	0.21	10.08	1.02	13.53	0.00	1.20	1.20	12.34	3.89	0.34	4.32	3.55
12	2.04	0.39	0.21	10.51	1.06	14.21	0.00	1.20	1.20	13.01	3.65	0.31	4.15	3.34
13	2.23	0.40	0.21	10.97	1.09	14.91	0.00	1.20	1.20	13.71	3.42	0.27	3.97	3.14
14	2.43	0.41	0.21	11.45	1.12	15.63	0.00	1.20	1.20	14.43	3.20	0.24	3.80	2.95
15	2.64	0.42	0.21	11.96	1.16	16.38	0.00	1.20	1.20	15.19	2.99	0.22	3.64	2.77
16	2.84	0.43	0.21	12.49	1.19	17.15	0.00	1.20	1.20	15.96	2.80	0.20	3.47	2.60
17	3.05	0.43	0.21	13.04	1.23	17.97	0.00	1.20	1.20	16.77	2.62	0.17	3.32	2.44
18	3.26	0.44	0.21	13.62	1.27	18.80	0.00	1.20	1.20	17.60	2.44	0.16	3.17	2.29
19	3.47	0.45	0.21	14.23	1.31	19.67	0.00	1.20	1.20	18.47	2.28	0.14	3.02	2.14
20	3.69	0.46	0.21	14.87	1.35	20.58	0.00	1.20	1.20	19.39	2.13	0.12	2.88	2.01
21	3.69	0.44	0.21	14.87	1.40	20.61	0.00	1.20	1.20	19.41	1.91	0.11	2.62	1.80
22	3.69	0.43	0.21	14.87	1.44	20.64	0.00	1.20	1.20	19.44	1.71	0.10	2.39	1.61
23	3.69	0.41	0.21	14.87	1.49	20.66	0.00	1.20	1.20	19.47	1.52	0.09	2.17	1.44
24	3.69	0.41	0.21	14.87	1.53	20.71	0.00	1.20	1.20	19.52	1.36	0.08	1.98	1.29
25	3.69	0.43	0.21	14.87	1.58	20.79	0.00	1.20	1.20	19.59	1.22	0.07	1.81	1.15
26	3.69	0.45	0.21	14.87	1.64	20.86	0.00	1.20	1.20	19.66	1.10	0.06	1.65	1.03
27	3.69	0.47	0.21	14.87	1.68	20.92	0.00	1.20	1.20	19.73	0.98	0.06	1.50	0.93
28	3.69	0.49	0.21	14.87	1.74	21.00	0.00	1.20	1.20	19.80	0.88	0.05	1.37	0.83
29	3.69	0.51	0.21	14.87	1.79	21.08	0.00	1.20	1.20	19.88	0.79	0.04	1.25	0.74
30	3.69	0.54	0.21	14.87	1.85	21.15	0.00	1.20	1.20	19.96	0.71	0.04	1.14	0.67
TOTAL	70.62	12.06	5.78	331.15	34.17	453.78	95.86	32.23	128.09	325.70	76.95	78.55	14.02	-1.60

* Benefits increased by 10%

NET PRESENT WORTH = Rs. -1.5986 million

B/C RATIO = 0.98 : 1

IRR = 11.80 %

712

TABLE 9.52.2

SENSITIVITY ANALYSIS OF DADU SYSTEM
ALT II *

(Rs.Million)

YEARS	BENEFITS: Increase in Agri. Prod.	Savings in off-Road Hauling Exp.	Canal O&M Savings	Vehicle Operating Cost(VOC) Savings	Time Savings	Total Benefits	COSTS: Capital Cost	O & M Cost	Total Cost	CASH FLOW	PRESENT WORTH: Benefits @ 12%	Costs @ 12%	CASH FLOW 10%	CASH FLOW 12%
0	0.00	0.00	0.00	0.00	0.00	0.00	0.00	0.00	0.00	0.00	0.00	0.00	0.00	0.00
1	0.00	0.00	0.00	0.00	0.00	0.00	23.11	0.00	23.11	-23.11	0.00	18.42	0.00	0.00
2	0.02	0.04	0.03	0.95	0.10	1.13	20.50	0.18	20.68	-19.55	0.81	14.72	-19.10	-18.42
3	0.11	0.93	0.07	2.30	0.25	3.66	16.02	0.42	16.44	-12.78	2.32	10.45	-14.69	-13.91
4	0.29	0.17	0.12	4.10	0.45	5.13	15.89	0.72	16.61	-11.48	2.91	9.42	-8.73	-8.12
5	0.55	0.25	0.17	6.06	0.65	7.67	10.76	1.02	11.77	-4.10	3.89	5.96	-7.13	-6.51
6	0.81	0.30	0.20	7.43	0.79	9.53	0.00	1.20	1.20	8.33	4.31	0.54	-2.32	-2.08
7	0.98	0.31	0.20	7.74	0.82	10.05	0.00	1.20	1.20	8.85	4.06	0.48	4.27	3.77
8	0.15	0.32	0.20	8.07	0.84	9.58	0.00	1.20	1.20	8.38	3.45	0.43	4.13	3.58
9	1.32	0.33	0.20	8.42	0.87	11.13	0.00	1.20	1.20	9.94	3.58	0.39	3.55	3.02
10	1.50	0.34	0.20	8.78	0.90	11.71	0.00	1.20	1.20	10.52	3.37	0.34	3.83	3.20
11	1.67	0.35	0.20	9.16	0.93	12.30	0.00	1.20	1.20	11.11	3.16	0.31	3.69	3.02
12	1.85	0.35	0.20	9.56	0.96	12.92	0.00	1.20	1.20	11.72	2.96	0.27	3.54	2.85
13	2.03	0.36	0.20	9.98	0.99	13.55	0.00	1.20	1.20	12.36	2.77	0.24	3.40	2.69
14	2.21	0.37	0.20	10.41	1.02	14.21	0.00	1.20	1.20	13.01	2.60	0.22	3.25	2.53
15	2.40	0.38	0.20	10.87	1.05	14.89	0.00	1.20	1.20	13.70	2.43	0.20	3.11	2.38
16	2.58	0.39	0.20	11.35	1.08	15.59	0.00	1.20	1.20	14.40	2.27	0.17	2.98	2.23
17	2.77	0.40	0.20	11.85	1.12	16.33	0.00	1.20	1.20	15.14	2.12	0.16	2.85	2.10
18	2.96	0.40	0.20	12.38	1.15	17.09	0.00	1.20	1.20	15.89	1.98	0.14	2.72	1.97
19	3.15	0.41	0.20	12.94	1.19	17.88	0.00	1.20	1.20	16.69	1.85	0.12	2.60	1.85
20	3.35	0.42	0.20	13.52	1.23	18.71	0.00	1.20	1.20	17.51	1.73	0.11	2.48	1.73
21	3.35	0.40	0.20	13.52	1.27	18.74	0.00	1.20	1.20	17.54	1.55	0.10	2.37	1.62
22	3.35	0.39	0.20	13.52	1.31	18.76	0.00	1.20	1.20	17.56	1.38	0.09	2.15	1.45
23	3.35	0.37	0.20	13.52	1.35	18.78	0.00	1.20	1.20	17.59	1.24	0.08	1.96	1.30
24	3.35	0.38	0.20	13.52	1.39	18.83	0.00	1.20	1.20	17.63	1.11	0.07	1.79	1.16
25	3.35	0.39	0.20	13.52	1.44	18.90	0.00	1.20	1.20	17.70	0.99	0.06	1.63	1.04
26	3.35	0.41	0.20	13.52	1.49	18.96	0.00	1.20	1.20	17.77	0.89	0.06	1.49	0.93
27	3.35	0.43	0.20	13.52	1.53	19.02	0.00	1.20	1.20	17.83	0.80	0.05	1.36	0.83
28	3.35	0.45	0.20	13.52	1.58	19.09	0.00	1.20	1.20	17.90	0.71	0.04	1.24	0.75
29	3.35	0.47	0.20	13.52	1.63	19.16	0.00	1.20	1.20	17.96	0.64	0.04	1.13	0.67
30	3.35	0.49	0.20	13.52	1.68	19.23	0.00	1.20	1.20	18.03	0.00	0.00	1.03	0.60
TOTAL	64.20	10.97	5.26	301.05	31.06	412.53	86.27	32.23	118.50	294.03	61.89	63.69	10.58	-1.80

* Costs decreased by 10%

NET PRESENT WORTH = Rs. -1.8043 million

B/C RATIO = 0.97 : 1

IRR = 11.71 %

713

TABLE 9.52.3

SENSITIVITY ANALYSIS OF DADU SYSTEM
ALT III *

(Rs.Million)

YEARS	BENEFITS: Increase in Agri. Prod.	BENEFITS: Savings in off-Road Hauling Exp.	BENEFITS: Canal O&M Savings	BENEFITS: Vehicle Operating Cost (VOC) Savings	BENEFITS: Time Savings	BENEFITS: Total Benefits	COSTS: Capital Cost	COSTS: O & M Cost	COSTS: Total Cost	CASH FLOW	PRESENT WORTH: Benefits @ 12%	PRESENT WORTH: Costs @ 12%	PRESENT WORTH: CASH FLOW 12%	PRESENT WORTH: CASH FLOW 14%
0	0.00	0.00	0.00	0.00	0.00	0.00	0.00	0.00	0.00	0.00	0.00	0.00	0.00	0.00
1	0.00	0.00	0.00	0.00	0.00	0.00	23.11	0.00	23.11	-23.11	0.00	20.63	-20.63	-20.27
2	0.02	0.04	0.03	1.04	0.11	1.25	20.50	0.18	20.68	-19.43	0.99	16.49	-15.49	-14.95
3	0.12	1.02	0.07	2.53	0.28	4.02	16.02	0.42	16.44	-12.42	2.86	11.70	-8.84	-8.38
4	0.32	0.18	0.13	4.51	0.50	5.64	15.89	0.72	16.61	-10.97	3.58	10.55	-6.97	-6.49
5	0.61	0.27	0.18	6.66	0.72	8.44	10.76	1.02	11.77	-3.34	4.79	6.68	-1.89	-1.73
6	0.89	0.33	0.21	8.17	0.87	10.48	0.00	1.20	1.20	9.28	5.31	0.61	4.70	4.23
7	1.08	0.34	0.21	8.52	0.90	11.05	0.00	1.20	1.20	9.86	5.00	0.54	4.46	3.94
8	0.17	0.35	0.21	8.88	0.92	10.54	0.00	1.20	1.20	9.34	4.26	0.48	3.77	3.27
9	1.45	0.36	0.21	9.26	0.96	12.25	0.00	1.20	1.20	11.05	4.42	0.43	3.98	3.40
10	1.65	0.37	0.21	9.66	0.99	12.89	0.00	1.20	1.20	11.69	4.15	0.39	3.76	3.15
11	1.84	0.38	0.21	10.08	1.02	13.53	0.00	1.20	1.20	12.34	3.89	0.34	3.55	2.92
12	2.04	0.39	0.21	10.51	1.06	14.21	0.00	1.20	1.20	13.01	3.65	0.31	3.34	2.70
13	2.23	0.40	0.21	10.97	1.09	14.91	0.00	1.20	1.20	13.71	3.42	0.27	3.14	2.50
14	2.43	0.41	0.21	11.45	1.12	15.63	0.00	1.20	1.20	14.43	3.20	0.24	2.95	2.31
15	2.64	0.42	0.21	11.96	1.16	16.38	0.00	1.20	1.20	15.19	2.99	0.22	2.77	2.13
16	2.84	0.43	0.21	12.49	1.19	17.15	0.00	1.20	1.20	15.96	2.80	0.20	2.60	1.96
17	3.05	0.43	0.21	13.04	1.23	17.97	0.00	1.20	1.20	16.77	2.62	0.17	2.44	1.81
18	3.26	0.44	0.21	13.62	1.27	18.80	0.00	1.20	1.20	17.60	2.44	0.16	2.29	1.66
19	3.47	0.45	0.21	14.23	1.31	19.67	0.00	1.20	1.20	18.47	2.28	0.14	2.14	1.53
20	3.69	0.46	0.21	14.87	1.35	20.58	0.00	1.20	1.20	19.39	2.13	0.12	2.01	1.41
21	3.69	0.44	0.21	14.87	1.40	20.61	0.00	1.20	1.20	19.41	1.91	0.11	1.80	1.24
22	3.69	0.43	0.21	14.87	1.44	20.64	0.00	1.20	1.20	19.44	1.71	0.10	1.61	1.09
23	3.69	0.41	0.21	14.87	1.49	20.66	0.00	1.20	1.20	19.47	1.52	0.09	1.44	0.96
24	3.69	0.41	0.21	14.87	1.53	20.71	0.00	1.20	1.20	19.52	1.36	0.08	1.29	0.84
25	3.69	0.43	0.21	14.87	1.58	20.79	0.00	1.20	1.20	19.59	1.22	0.07	1.15	0.74
26	3.69	0.45	0.21	14.87	1.64	20.86	0.00	1.20	1.20	19.66	1.10	0.06	1.03	0.65
27	3.69	0.47	0.21	14.87	1.68	20.92	0.00	1.20	1.20	19.73	0.98	0.06	0.93	0.57
28	3.69	0.49	0.21	14.87	1.74	21.00	0.00	1.20	1.20	19.80	0.88	0.05	0.83	0.51
29	3.69	0.51	0.21	14.87	1.79	21.08	0.00	1.20	1.20	19.88	0.79	0.04	0.74	0.44
30	3.69	0.54	0.21	14.87	1.85	21.15	0.00	1.20	1.20	19.96	0.71	0.04	0.67	0.39
TOTAL	70.62	12.06	5.78	331.15	34.17	453.78	86.27	32.23	118.50	335.28	76.95	71.37	5.58	-5.48

* Benefits increased & Capital Cost decreased by 10%

NET PRESENT WORTH = Rs. 5.57649 million

B/C RATIO = 1.08 : 1

IRR = 13.01 %

714

TABLE 9.52.4

SENSITIVITY ANALYSIS OF DADU SYSTEM
ALT IV *

(Rs.Million)

YEARS	BENEFITS: Increase in Agri. Prod.	Savings in off-Road Hauling Exp.	Canal O&M Savings	Vehicle Operating Cost(VOC) Savings	Time Savings	Total Benefits	COSTS: Capital Cost	O & M Cost	Total Cost	CASH FLOW	PRESENT WORTH: Benefits @ 12%	Costs @ 12%	CASH FLOW 12%	CASH FLOW 14%
0	0.00	0.00	0.00	0.00	0.00	0.00	0.00	0.00	0.00	0.00	0.00	0.00	0.00	0.00
1	0.00	0.00	0.00	0.00	0.00	0.00	25.68	0.00	25.68	-25.68	0.00	22.92	-22.92	-22.52
2	0.02	0.04	0.03	1.06	0.11	1.27	22.78	0.18	22.96	-21.69	1.01	18.30	-17.29	-16.69
3	0.12	1.04	0.08	2.58	0.28	4.10	17.80	0.42	18.22	-14.11	2.92	12.97	-10.04	-9.52
4	0.33	0.19	0.13	4.61	0.51	5.76	17.65	0.72	18.37	-12.61	3.66	11.68	-8.02	-7.47
5	0.62	0.28	0.19	6.80	0.73	8.61	11.95	1.02	12.97	-4.35	4.89	7.36	-2.47	-2.26
6	0.91	0.34	0.22	8.34	0.89	10.70	0.00	1.20	1.20	9.50	5.42	0.61	4.81	4.33
7	1.10	0.35	0.22	8.70	0.92	11.29	0.00	1.20	1.20	10.09	5.10	0.54	4.56	4.03
8	0.17	0.36	0.22	9.07	0.94	10.76	0.00	1.20	1.20	9.56	4.34	0.48	3.86	3.35
9	1.48	0.37	0.22	9.46	0.98	12.50	0.00	1.20	1.20	11.31	4.51	0.43	4.08	3.48
10	1.68	0.38	0.22	9.86	1.01	13.15	0.00	1.20	1.20	11.96	4.24	0.39	3.85	3.23
11	1.88	0.39	0.22	10.29	1.04	13.81	0.00	1.20	1.20	12.62	3.97	0.34	3.63	2.99
12	2.08	0.40	0.22	10.73	1.08	14.51	0.00	1.20	1.20	13.31	3.72	0.31	3.42	2.76
13	2.28	0.41	0.22	11.20	1.11	15.22	0.00	1.20	1.20	14.02	3.49	0.27	3.21	2.55
14	2.48	0.42	0.22	11.69	1.15	15.96	0.00	1.20	1.20	14.76	3.26	0.24	3.02	2.36
15	2.70	0.43	0.22	12.21	1.18	16.73	0.00	1.20	1.20	15.53	3.06	0.22	2.84	2.18
16	2.90	0.43	0.22	12.75	1.21	17.51	0.00	1.20	1.20	16.31	2.86	0.20	2.66	2.00
17	3.11	0.44	0.22	13.31	1.26	18.34	0.00	1.20	1.20	17.15	2.67	0.17	2.50	1.85
18	3.32	0.45	0.22	13.90	1.29	19.19	0.00	1.20	1.20	17.99	2.50	0.16	2.34	1.70
19	3.54	0.46	0.22	14.53	1.34	20.08	0.00	1.20	1.20	18.88	2.33	0.14	2.19	1.57
20	3.76	0.47	0.22	15.18	1.38	21.01	0.00	1.20	1.20	19.82	2.18	0.12	2.05	1.44
21	3.76	0.45	0.22	15.18	1.43	21.04	0.00	1.20	1.20	19.84	1.95	0.11	1.84	1.27
22	3.76	0.43	0.22	15.18	1.47	21.07	0.00	1.20	1.20	19.87	1.74	0.10	1.64	1.11
23	3.76	0.42	0.22	15.18	1.52	21.09	0.00	1.20	1.20	19.90	1.56	0.09	1.47	0.98
24	3.76	0.42	0.22	15.18	1.56	21.14	0.00	1.20	1.20	19.95	1.39	0.08	1.31	0.86
25	3.76	0.44	0.22	15.18	1.62	21.22	0.00	1.20	1.20	20.02	1.25	0.07	1.18	0.76
26	3.76	0.46	0.22	15.18	1.67	21.30	0.00	1.20	1.20	20.10	1.12	0.06	1.06	0.67
27	3.76	0.48	0.22	15.18	1.72	21.36	0.00	1.20	1.20	20.17	1.00	0.06	0.95	0.59
28	3.76	0.50	0.22	15.18	1.77	21.44	0.00	1.20	1.20	20.24	0.90	0.05	0.85	0.52
29	3.76	0.52	0.22	15.18	1.83	21.52	0.00	1.20	1.20	20.32	0.80	0.04	0.76	0.45
30	3.76	0.55	0.22	15.18	1.89	21.60	0.00	1.20	1.20	20.40	0.72	0.04	0.68	0.40
TOTAL	72.10	12.32	5.90	338.08	34.88	463.27	95.86	32.23	128.09	335.18	78.56	78.55	0.01	-11.06

* Benefits increased by 12.30%

NET PRESENT WORTH = Rs. 0.01031 million

B/C RATIO = 1.00 : 1

IRR = 12.00 %

715

TABLE 9.52.5

SENSITIVITY ANALYSIS OF DADU SYSTEM
ALT V *

(Rs.Million)

YEARS	BENEFITS: Increase in Agri. Prod.	Savings in off-Road Hauling Exp.	Canal O&M Savings	Vehicle Operating Cost (VOC) Savings	Time Savings	Total Benefits	COSTS: Capital Cost	O & M Cost	Total Cost	CASH FLOW	PRESENT WORTH: Benefits @ 12%	Costs @ 12%	CASH FLOW 12%	CASH FLOW 14%
0	0.00	0.00	0.00	0.00	0.00	0.00	0.00	0.00	0.00	0.00	0.00	0.00	0.00	0.00
1	0.00	0.00	0.00	0.00	0.00	0.00	22.34	0.00	22.34	-22.34	0.00	17.81	0.00	0.00
2	0.02	0.04	0.03	0.95	0.10	1.13	19.82	0.18	20.00	-18.86	0.81	14.23	-17.81	-17.19
3	0.11	0.93	0.07	2.30	0.25	3.66	15.48	0.42	15.90	-12.25	2.32	10.11	-13.43	-12.73
4	0.29	0.17	0.12	4.10	0.45	5.13	15.36	0.72	16.08	-10.95	2.91	9.12	-7.78	-7.25
5	0.55	0.25	0.17	6.06	0.65	7.67	10.40	1.02	11.41	-3.74	3.89	5.78	-6.21	-5.69
6	0.81	0.30	0.20	7.43	0.79	9.53	0.00	1.20	1.20	8.33	4.31	0.54	-1.90	-1.71
7	0.98	0.31	0.20	7.74	0.82	10.05	0.00	1.20	1.20	8.85	4.06	0.48	3.77	3.33
8	0.15	0.32	0.20	8.07	0.84	9.58	0.00	1.20	1.20	8.38	3.45	0.43	3.58	3.10
9	1.32	0.33	0.20	8.42	0.87	11.13	0.00	1.20	1.20	9.94	3.58	0.39	3.02	2.58
10	1.50	0.34	0.20	8.78	0.90	11.71	0.00	1.20	1.20	10.52	3.37	0.34	3.20	2.68
11	1.67	0.35	0.20	9.16	0.93	12.30	0.00	1.20	1.20	11.11	3.16	0.31	3.02	2.49
12	1.85	0.35	0.20	9.56	0.96	12.92	0.00	1.20	1.20	11.72	2.96	0.27	2.85	2.30
13	2.03	0.36	0.20	9.98	0.99	13.55	0.00	1.20	1.20	12.36	2.77	0.24	2.69	2.13
14	2.21	0.37	0.20	10.41	1.02	14.21	0.00	1.20	1.20	13.01	2.60	0.22	2.53	1.97
15	2.40	0.38	0.20	10.87	1.05	14.89	0.00	1.20	1.20	13.70	2.43	0.20	2.38	1.82
16	2.58	0.39	0.20	11.35	1.08	15.59	0.00	1.20	1.20	14.40	2.27	0.17	2.23	1.68
17	2.77	0.40	0.20	11.85	1.12	16.33	0.00	1.20	1.20	15.14	2.12	0.16	2.10	1.55
18	2.96	0.40	0.20	12.38	1.15	17.09	0.00	1.20	1.20	15.89	1.98	0.14	1.97	1.43
19	3.15	0.41	0.20	12.94	1.19	17.88	0.00	1.20	1.20	16.69	1.85	0.12	1.85	1.32
20	3.35	0.42	0.20	13.52	1.23	18.71	0.00	1.20	1.20	17.51	1.73	0.11	1.73	1.21
21	3.35	0.40	0.20	13.52	1.27	18.74	0.00	1.20	1.20	17.54	1.55	0.10	1.62	1.12
22	3.35	0.39	0.20	13.52	1.31	18.76	0.00	1.20	1.20	17.56	1.38	0.09	1.45	0.98
23	3.35	0.37	0.20	13.52	1.35	18.79	0.00	1.20	1.20	17.59	1.24	0.08	1.30	0.86
24	3.35	0.38	0.20	13.52	1.39	18.83	0.00	1.20	1.20	17.63	1.11	0.07	1.16	0.76
25	3.35	0.39	0.20	13.52	1.44	18.90	0.00	1.20	1.20	17.70	0.99	0.06	1.04	0.67
26	3.35	0.41	0.20	13.52	1.49	18.96	0.00	1.20	1.20	17.77	0.89	0.06	0.93	0.59
27	3.35	0.43	0.20	13.52	1.53	19.02	0.00	1.20	1.20	17.83	0.80	0.05	0.83	0.52
28	3.35	0.45	0.20	13.52	1.58	19.09	0.00	1.20	1.20	17.90	0.71	0.04	0.75	0.45
29	3.35	0.47	0.20	13.52	1.63	19.16	0.00	1.20	1.20	17.96	0.64	0.04	0.67	0.40
30	3.35	0.49	0.20	13.52	1.68	19.23	0.00	1.20	1.20	18.03	0.00	0.00	0.60	0.35
TOTAL	64.20	10.97	5.26	301.05	31.06	412.53	83.39	32.23	115.63	296.90	61.89	61.77	0.12	-8.25

* Capital Costs decreased by 13%

NET PRESENT WORTH = Rs. 0.11756 million

B/C RATIO = 1.00 : 1

IRR = 12.03 %

716

TABLE 9.53.1

SENSITIVITY ANALYSIS OF KABUL SYSTEM
ALT I *

(Rs.Million)

YEARS	BENEFITS: Increase in Agri. Prod.	Savings in off-Road Hauling Exp.	Canal O&M Savings	Vehicle Operating Cost(VOC) Savings	Time Savings	Total Benefits	COSTS: Capital Cost	O & M Cost	Total Cost	CASH FLOW	PRESENT WORTH: Benefits @ 12%	Costs @ 12%	CASH FLOW 20%	CASH FLOW 22%
0	0.00	0.00	0.00	0.00	0.00	0.00	0.00	0.00	0.00	0.00	0.00	0.00	0.00	0.00
1	0.00	0.00	0.00	0.00	0.00	0.00	6.19	0.00	6.19	-6.19	0.00	5.53	-5.16	-5.07
2	0.05	0.03	0.01	0.27	0.02	0.38	5.49	0.03	5.52	-5.14	0.30	4.40	-3.57	-3.45
3	0.25	0.07	0.02	0.67	0.05	1.05	4.29	0.07	4.36	-3.30	0.75	3.10	-1.91	-1.82
4	0.65	0.11	0.03	1.20	0.09	2.08	4.26	0.12	4.37	-2.30	1.32	2.78	-1.11	-1.04
5	1.22	0.16	0.04	1.77	0.13	3.33	2.88	0.16	3.05	0.28	1.89	1.73	0.11	0.10
6	1.79	0.20	0.04	2.18	0.15	4.37	0.00	0.19	0.19	4.17	2.21	0.10	1.40	1.27
7	2.15	0.20	0.04	2.28	0.15	4.83	0.00	0.19	0.19	4.64	2.18	0.09	1.29	1.15
8	2.51	0.20	0.04	2.39	0.16	5.30	0.00	0.19	0.19	5.11	2.14	0.08	1.19	1.04
9	2.86	0.20	0.04	2.50	0.16	5.77	0.00	0.19	0.19	5.58	2.08	0.07	1.08	0.93
10	3.21	0.21	0.04	2.61	0.16	6.24	0.00	0.19	0.19	6.04	2.01	0.06	0.98	0.83
11	3.57	0.21	0.04	2.73	0.17	6.73	0.00	0.19	0.19	6.54	1.93	0.06	0.88	0.73
12	3.92	0.21	0.04	2.86	0.17	7.21	0.00	0.19	0.19	7.02	1.85	0.05	0.79	0.65
13	4.28	0.21	0.04	2.99	0.18	7.70	0.00	0.19	0.19	7.51	1.77	0.04	0.70	0.57
14	4.63	0.22	0.04	3.13	0.18	8.20	0.00	0.19	0.19	8.00	1.68	0.04	0.62	0.49
15	4.98	0.22	0.04	3.28	0.19	8.70	0.00	0.19	0.19	8.51	1.59	0.04	0.55	0.43
16	5.33	0.22	0.04	3.43	0.19	9.21	0.00	0.19	0.19	9.02	1.50	0.03	0.49	0.37
17	5.68	0.22	0.04	3.59	0.19	9.73	0.00	0.19	0.19	9.53	1.42	0.03	0.43	0.32
18	6.03	0.23	0.04	3.76	0.20	10.26	0.00	0.19	0.19	10.07	1.33	0.02	0.38	0.28
19	6.38	0.23	0.04	3.94	0.20	10.79	0.00	0.19	0.19	10.60	1.25	0.02	0.33	0.24
20	6.72	0.23	0.04	4.12	0.21	11.33	0.00	0.19	0.19	11.14	1.17	0.02	0.29	0.21
21	6.72	0.23	0.04	4.12	0.21	11.33	0.00	0.19	0.19	11.14	1.05	0.02	0.24	0.17
22	6.72	0.23	0.04	4.12	0.22	11.34	0.00	0.19	0.19	11.15	0.94	0.02	0.20	0.14
23	6.72	0.24	0.04	4.12	0.22	11.34	0.00	0.19	0.19	11.15	0.84	0.01	0.17	0.12
24	6.72	0.24	0.04	4.12	0.23	11.35	0.00	0.19	0.19	11.16	0.75	0.01	0.14	0.09
25	6.72	0.24	0.04	4.12	0.23	11.37	0.00	0.19	0.19	11.17	0.67	0.01	0.12	0.08
26	6.72	0.24	0.04	4.12	0.23	11.37	0.00	0.19	0.19	11.18	0.60	0.01	0.10	0.06
27	6.72	0.25	0.04	4.12	0.24	11.38	0.00	0.19	0.19	11.19	0.53	0.01	0.08	0.05
28	6.72	0.25	0.04	4.12	0.24	11.38	0.00	0.19	0.19	11.19	0.48	0.01	0.07	0.04
29	6.72	0.70	0.04	4.12	0.25	11.84	0.00	0.19	0.19	11.65	0.44	0.01	0.06	0.04
30	6.72	0.25	0.04	4.12	0.26	11.40	0.00	0.19	0.19	11.21	0.38	0.01	0.05	0.03
TOTAL	133.45	6.43	1.19	90.94	5.28	237.29	23.12	5.17	28.29	209.00	37.05	18.39	0.99	-0.94

* Benefits decreased by 10%

NET PRESENT WORTH = Rs. 18.6580 million

B/C RATIO = 2.01 : 1

IRR = 21.02 %

717

TABLE 9.53.2

SENSITIVITY ANALYSIS OF KABUL SYSTEM
ALT II *

(Rs.Million)

YEARS	BENEFITS: Increase in Agri. Prod.	Savings in off-Road Hauling Exp.	Canal O&M Savings	Vehicle Operating Cost (VOC) Savings	Time Savings	Total Benefits	COSTS: Capital Cost	O & M Cost	Total Cost	CASH FLOW	PRESENT WORTH: Benefits @ 12%	Costs @ 12%	CASH FLOW 20%	CASH FLOW 22%
0	0.00	0.00	0.00	0.00	0.00	0.00	0.00	0.00	0.00	0.00	0.00	0.00	0.00	0.00
1	0.00	0.00	0.00	0.00	0.00	0.00	6.81	0.00	6.81	-6.81	0.00	6.08	-5.68	-5.58
2	0.06	0.03	0.01	0.30	0.02	0.42	6.04	0.03	6.07	-5.65	0.34	4.84	-3.92	-3.80
3	0.28	0.07	0.02	0.74	0.06	1.17	4.72	0.07	4.79	-3.62	0.83	3.41	-2.09	-1.99
4	0.72	0.13	0.03	1.33	0.10	2.31	4.68	0.12	4.80	-2.49	1.47	3.05	-1.20	-1.12
5	1.36	0.18	0.04	1.97	0.14	3.70	3.17	0.16	3.33	0.36	2.10	1.89	0.15	0.13
6	1.99	0.22	0.05	2.42	0.17	4.85	0.00	0.19	0.19	4.66	2.46	0.10	1.56	1.41
7	2.39	0.22	0.05	2.54	0.17	5.37	0.00	0.19	0.19	5.17	2.43	0.09	1.44	1.29
8	2.79	0.22	0.05	2.65	0.18	5.89	0.00	0.19	0.19	5.70	2.38	0.08	1.33	1.16
9	3.18	0.23	0.05	2.77	0.18	6.41	0.00	0.19	0.19	6.22	2.31	0.07	1.20	1.04
10	3.57	0.23	0.05	2.90	0.18	6.93	0.00	0.19	0.19	6.74	2.23	0.06	1.09	0.92
11	3.97	0.23	0.05	3.04	0.19	7.48	0.00	0.19	0.19	7.28	2.15	0.06	0.98	0.82
12	4.36	0.23	0.05	3.18	0.19	8.01	0.00	0.19	0.19	7.82	2.06	0.05	0.88	0.72
13	4.75	0.24	0.05	3.32	0.20	8.56	0.00	0.19	0.19	8.37	1.96	0.04	0.73	0.63
14	5.14	0.24	0.05	3.48	0.20	9.11	0.00	0.19	0.19	8.91	1.86	0.04	0.69	0.55
15	5.53	0.24	0.05	3.64	0.21	9.67	0.00	0.19	0.19	9.48	1.77	0.04	0.62	0.48
16	5.92	0.24	0.05	3.81	0.21	10.23	0.00	0.19	0.19	10.04	1.67	0.03	0.54	0.42
17	6.31	0.25	0.05	3.99	0.21	10.81	0.00	0.19	0.19	10.61	1.57	0.03	0.48	0.36
18	6.70	0.25	0.05	4.18	0.22	11.40	0.00	0.19	0.19	11.21	1.48	0.02	0.42	0.31
19	7.09	0.25	0.05	4.38	0.22	11.99	0.00	0.19	0.19	11.79	1.39	0.02	0.37	0.27
20	7.47	0.26	0.05	4.58	0.23	12.59	0.00	0.19	0.19	12.39	1.30	0.02	0.32	0.23
21	7.47	0.26	0.05	4.58	0.23	12.59	0.00	0.19	0.19	12.40	1.17	0.02	0.27	0.19
22	7.47	0.26	0.05	4.58	0.24	12.60	0.00	0.19	0.19	12.41	1.04	0.02	0.22	0.16
23	7.47	0.26	0.05	4.58	0.24	12.60	0.00	0.19	0.19	12.41	0.93	0.01	0.19	0.13
24	7.47	0.27	0.05	4.58	0.25	12.62	0.00	0.19	0.19	12.42	0.83	0.01	0.16	0.11
25	7.47	0.27	0.05	4.58	0.26	12.63	0.00	0.19	0.19	12.44	0.74	0.01	0.13	0.09
26	7.47	0.27	0.05	4.58	0.26	12.63	0.00	0.19	0.19	12.44	0.66	0.01	0.11	0.07
27	7.47	0.27	0.05	4.58	0.27	12.64	0.00	0.19	0.19	12.45	0.59	0.01	0.09	0.06
28	7.47	0.28	0.05	4.58	0.27	12.65	0.00	0.19	0.19	12.45	0.53	0.01	0.08	0.05
29	7.47	0.78	0.05	4.58	0.28	13.16	0.00	0.19	0.19	12.97	0.49	0.01	0.07	0.04
30	7.47	0.28	0.05	4.58	0.29	12.67	0.00	0.19	0.17	12.48	0.42	0.01	0.05	0.03
TOTAL	148.28	7.15	1.32	101.04	5.87	263.66	25.43	5.17	30.60	233.06	41.17	20.12	1.32	-0.83

* Costs increased by 10%

NET PRESENT WORTH = Rs. 21.0446 million

B/C RATIO = 2.05 : 1

IRR = 21.23 %

718

TABLE 9.53.3

SENSITIVITY ANALYSIS OF KABUL SYSTEM
ALT III *

(Rs.Million)

YEARS	BENEFITS: Increase in Agri. Prod.	Savings in off-Road Hauling Exp.	Canal D&M Savings	Vehicle Operating Cost (VOC) Savings	Time Savings	Total-Benefits	COSTS: Capital Cost	O & M Cost	Total Cost	CASH FLOW	PRESENT WORTH: Benefits @ 12%	Costs @ 12%	CASH FLOW 18%	CASH FLOW 20%
0	0.00	0.00	0.00	0.00	0.00	0.00	0.00	0.00	0.00	0.00	0.00	0.00	0.00	0.00
1	0.00	0.00	0.00	0.00	0.00	0.00	6.81	0.00	6.81	-6.81	0.00	6.08	-5.77	-5.68
2	0.05	0.03	0.01	0.27	0.02	0.38	6.04	0.03	6.07	-5.69	0.30	4.84	-4.09	-3.95
3	0.25	0.07	0.02	0.67	0.05	1.05	4.72	0.07	4.79	-3.73	0.75	3.41	-2.27	-2.16
4	0.65	0.11	0.03	1.20	0.09	2.08	4.68	0.12	4.80	-2.72	1.32	3.05	-1.40	-1.31
5	1.22	0.16	0.04	1.77	0.13	3.33	3.17	0.16	3.33	-0.01	1.89	1.89	.00	.00
6	1.79	0.20	0.04	2.18	0.15	4.37	0.00	0.19	0.19	4.17	2.21	0.10	1.55	1.40
7	2.15	0.20	0.04	2.28	0.15	4.83	0.00	0.19	0.19	4.64	2.18	0.09	1.46	1.29
8	2.51	0.20	0.04	2.39	0.16	5.30	0.00	0.19	0.19	5.11	2.14	0.08	1.36	1.19
9	2.86	0.20	0.04	2.50	0.16	5.77	0.00	0.19	0.19	5.58	2.08	0.07	1.26	1.08
10	3.21	0.21	0.04	2.61	0.16	6.24	0.00	0.19	0.19	6.04	2.01	0.06	1.15	0.98
11	3.57	0.21	0.04	2.73	0.17	6.73	0.00	0.19	0.19	6.54	1.93	0.06	1.06	0.88
12	3.92	0.21	0.04	2.86	0.17	7.21	0.00	0.19	0.19	7.02	1.85	0.05	0.96	0.79
13	4.28	0.21	0.04	2.99	0.18	7.70	0.00	0.19	0.19	7.51	1.77	0.04	0.87	0.70
14	4.63	0.22	0.04	3.13	0.18	8.20	0.00	0.19	0.19	8.00	1.68	0.04	0.79	0.62
15	4.98	0.22	0.04	3.28	0.19	8.70	0.00	0.19	0.19	8.51	1.59	0.04	0.71	0.55
16	5.33	0.22	0.04	3.43	0.19	9.21	0.00	0.19	0.19	9.02	1.50	0.03	0.64	0.49
17	5.68	0.22	0.04	3.59	0.19	9.73	0.00	0.19	0.19	9.53	1.42	0.03	0.57	0.43
18	6.03	0.23	0.04	3.76	0.20	10.26	0.00	0.19	0.19	10.07	1.33	0.02	0.51	0.38
19	6.38	0.23	0.04	3.94	0.20	10.79	0.00	0.19	0.19	10.60	1.25	0.02	0.46	0.33
20	6.72	0.23	0.04	4.12	0.21	11.33	0.00	0.19	0.19	11.14	1.17	0.02	0.41	0.29
21	6.72	0.23	0.04	4.12	0.21	11.33	0.00	0.19	0.19	11.14	1.05	0.02	0.34	0.24
22	6.72	0.23	0.04	4.12	0.22	11.34	0.00	0.19	0.19	11.15	0.94	0.02	0.29	0.20
23	6.72	0.24	0.04	4.12	0.22	11.34	0.00	0.19	0.19	11.15	0.84	0.01	0.25	0.17
24	6.72	0.24	0.04	4.12	0.23	11.35	0.00	0.19	0.19	11.16	0.75	0.01	0.21	0.14
25	6.72	0.24	0.04	4.12	0.23	11.37	0.00	0.19	0.19	11.17	0.67	0.01	0.18	0.12
26	6.72	0.24	0.04	4.12	0.23	11.37	0.00	0.19	0.19	11.18	0.60	0.01	0.15	0.10
27	6.72	0.25	0.04	4.12	0.24	11.38	0.00	0.19	0.19	11.19	0.53	0.01	0.13	0.08
28	6.72	0.25	0.04	4.12	0.24	11.38	0.00	0.19	0.19	11.19	0.48	0.01	0.11	0.07
29	6.72	0.70	0.04	4.12	0.25	11.84	0.00	0.19	0.19	11.65	0.44	0.01	0.10	0.06
30	6.72	0.25	0.04	4.12	0.26	11.40	0.00	0.19	0.19	11.21	0.38	0.01	0.08	0.05
TOTAL	133.45	6.43	1.19	90.94	5.28	237.29	25.43	5.17	30.60	206.69	37.05	20.12	2.05	-0.48

* Benefits decreased & Cost increased by 10%

NET PRESEMT WORTH = Rs. 16.9278 million

B/C RATIO = 1.84 : 1

IRR = 19.62 %

719

TABLE 9.53.4

SENSITIVITY ANALYSIS OF KABUL SYSTEM
ALT IV *

(Rs.Million)

YEARS	BENEFITS: Increase in Agri. Prod.	Savings in off-Road Hauling Exp.	Canal O&M Savings	Vehicle Operating Cost(VOC) Savings	Time Savings	Total Benefits	COSTS: Capital Cost	O & M Cost	Total Cost	CASH FLOW	PRESENT WORTH: Benefits @ 12%	Costs @ 12%	CASH FLOW 12%	CASH FLOW 14%
0	0.00	0.00	0.00	0.00	0.00	0.00	0.00	0.00	0.00	0.00	0.00	0.00	0.00	0.00
1	0.00	0.00	0.00	0.00	0.00	0.00	6.19	0.00	6.19	-6.19	0.00	5.53	-5.53	-5.43
2	0.03	0.01	.00	0.14	0.01	0.19	5.49	0.03	5.52	-5.33	0.15	4.40	-4.25	-4.10
3	0.13	0.03	0.01	0.33	0.03	0.53	4.29	0.07	4.36	-3.83	0.38	3.10	-2.73	-2.59
4	0.32	0.06	0.01	0.60	0.05	1.04	4.26	0.12	4.37	-3.33	0.66	2.78	-2.12	-1.97
5	0.61	0.08	0.02	0.89	0.06	1.66	2.88	0.16	3.05	-1.38	0.94	1.73	-0.78	-0.72
6	0.90	0.10	0.02	1.09	0.08	2.18	0.00	0.19	0.19	1.99	1.11	0.10	1.01	0.91
7	1.08	0.10	0.02	1.14	0.08	2.41	0.00	0.19	0.19	2.22	1.09	0.09	1.01	0.89
8	1.26	0.10	0.02	1.19	0.08	2.65	0.00	0.19	0.19	2.46	1.07	0.08	0.99	0.86
9	1.43	0.10	0.02	1.25	0.08	2.88	0.00	0.19	0.19	2.69	1.04	0.07	0.97	0.83
10	1.61	0.10	0.02	1.31	0.08	3.12	0.00	0.19	0.19	2.93	1.00	0.06	0.94	0.79
11	1.79	0.10	0.02	1.37	0.09	3.36	0.00	0.19	0.19	3.17	0.97	0.06	0.91	0.75
12	1.96	0.10	0.02	1.43	0.09	3.60	0.00	0.19	0.19	3.41	0.92	0.05	0.88	0.71
13	2.14	0.11	0.02	1.50	0.09	3.85	0.00	0.19	0.19	3.66	0.88	0.04	0.84	0.67
14	2.31	0.11	0.02	1.57	0.09	4.10	0.00	0.19	0.19	3.91	0.84	0.04	0.80	0.62
15	2.49	0.11	0.02	1.64	0.09	4.35	0.00	0.19	0.19	4.16	0.80	0.04	0.76	0.58
16	2.66	0.11	0.02	1.71	0.09	4.61	0.00	0.19	0.19	4.41	0.75	0.03	0.72	0.54
17	2.84	0.11	0.02	1.80	0.09	4.86	0.00	0.19	0.19	4.67	0.71	0.03	0.68	0.50
18	3.02	0.11	0.02	1.88	0.10	5.13	0.00	0.19	0.19	4.94	0.67	0.02	0.64	0.47
19	3.19	0.11	0.02	1.97	0.10	5.39	0.00	0.19	0.19	5.20	0.63	0.02	0.60	0.43
20	3.36	0.11	0.02	2.06	0.10	5.66	0.00	0.19	0.19	5.47	0.59	0.02	0.57	0.40
21	3.36	0.12	0.02	2.06	0.10	5.67	0.00	0.19	0.19	5.47	0.52	0.02	0.51	0.35
22	3.36	0.12	0.02	2.06	0.11	5.67	0.00	0.19	0.19	5.48	0.47	0.02	0.45	0.31
23	3.36	0.12	0.02	2.06	0.11	5.67	0.00	0.19	0.19	5.48	0.42	0.01	0.40	0.27
24	3.36	0.12	0.02	2.06	0.11	5.68	0.00	0.19	0.19	5.49	0.37	0.01	0.36	0.24
25	3.36	0.12	0.02	2.06	0.12	5.68	0.00	0.19	0.19	5.49	0.33	0.01	0.32	0.21
26	3.36	0.12	0.02	2.06	0.12	5.68	0.00	0.19	0.19	5.49	0.30	0.01	0.29	0.18
27	3.36	0.12	0.02	2.06	0.12	5.69	0.00	0.19	0.19	5.50	0.27	0.01	0.26	0.16
28	3.36	0.12	0.02	2.06	0.12	5.69	0.00	0.19	0.19	5.50	0.24	0.01	0.23	0.14
29	3.36	0.35	0.02	2.06	0.13	5.92	0.00	0.19	0.19	5.73	0.22	0.01	0.21	0.13
30	3.36	0.13	0.02	2.06	0.13	5.70	0.00	0.19	0.19	5.51	0.19	0.01	0.18	0.11
TOTAL	66.73	3.22	0.59	45.47	2.64	118.65	23.12	5.17	28.29	90.36	18.53	18.39	0.13	-2.78

* Benefits decreased by 55%

NET PRESENT WORTH = Rs. 0.13242 million

B/C RATIO = 1.01 : 1

IRR = 12.09 %

720

TABLE 9.53.5

SENSITIVITY ANALYSIS OF KABUL SYSTEM
ALT V *

(Rs.Million)

YEARS	BENEFITS: Increase in Agri. Prod.	BENEFITS: Savings in off-Road Hauling Exp.	BENEFITS: Canal O&M Savings	BENEFITS: Vehicle Operating Cost (VOC) Savings	BENEFITS: Time Savings	BENEFITS: Total Benefits	COSTS: Capital Cost	COSTS: O & M Cost	COSTS: Total Cost	CASH FLOW	PRESENT WORTH: Benefits @ 12%	PRESENT WORTH: Costs @ 12%	PRESENT WORTH: CASH FLOW 12%	PRESENT WORTH: CASH FLOW 14%
0	0.00	0.00	0.00	0.00	0.00	0.00	0.00	0.00	0.00	0.00	0.00	0.00	0.00	0.00
1	0.00	0.00	0.00	0.00	0.00	0.00	14.24	0.00	14.24	-14.24	0.00	12.71	-12.71	-12.49
2	0.06	0.03	0.01	0.30	0.02	0.42	12.63	0.03	12.66	-12.24	0.34	10.09	-9.76	-9.42
3	0.28	0.07	0.02	0.74	0.06	1.17	9.87	0.07	9.94	-8.77	0.83	7.07	-6.24	-5.92
4	0.72	0.13	0.03	1.33	0.10	2.31	9.79	0.12	9.91	-7.60	1.47	6.30	-4.83	-4.50
5	1.36	0.18	0.04	1.97	0.14	3.70	6.63	0.16	6.79	-3.10	2.10	3.85	-1.76	-1.61
6	1.99	0.22	0.05	2.42	0.17	4.85	0.00	0.19	0.19	4.66	2.46	0.10	2.36	2.12
7	2.39	0.22	0.05	2.54	0.17	5.37	0.00	0.19	0.19	5.17	2.43	0.09	2.34	2.07
8	2.79	0.22	0.05	2.65	0.18	5.89	0.00	0.19	0.19	5.70	2.38	0.08	2.30	2.00
9	3.18	0.23	0.05	2.77	0.18	6.41	0.00	0.19	0.19	6.22	2.31	0.07	2.24	1.91
10	3.57	0.23	0.05	2.90	0.18	6.93	0.00	0.19	0.19	6.74	2.23	0.06	2.17	1.82
11	3.97	0.23	0.05	3.04	0.19	7.48	0.00	0.19	0.19	7.28	2.15	0.06	2.09	1.72
12	4.36	0.23	0.05	3.18	0.19	8.01	0.00	0.19	0.19	7.82	2.06	0.05	2.01	1.62
13	4.75	0.24	0.05	3.32	0.20	8.56	0.00	0.19	0.19	8.37	1.96	0.04	1.92	1.52
14	5.14	0.24	0.05	3.48	0.20	9.11	0.00	0.19	0.19	8.91	1.86	0.04	1.82	1.42
15	5.53	0.24	0.05	3.64	0.21	9.67	0.00	0.19	0.19	9.48	1.77	0.04	1.73	1.33
16	5.92	0.24	0.05	3.81	0.21	10.23	0.00	0.19	0.19	10.04	1.67	0.03	1.64	1.23
17	6.31	0.25	0.05	3.99	0.21	10.81	0.00	0.19	0.19	10.61	1.57	0.03	1.55	1.14
18	6.70	0.25	0.05	4.18	0.22	11.40	0.00	0.19	0.19	11.21	1.48	0.02	1.46	1.06
19	7.09	0.25	0.05	4.38	0.22	11.99	0.00	0.19	0.19	11.79	1.39	0.02	1.37	0.98
20	7.47	0.26	0.05	4.58	0.23	12.59	0.00	0.19	0.19	12.39	1.30	0.02	1.28	0.90
21	7.47	0.26	0.05	4.58	0.23	12.59	0.00	0.19	0.19	12.40	1.17	0.02	1.15	0.79
22	7.47	0.26	0.05	4.58	0.24	12.60	0.00	0.19	0.19	12.41	1.04	0.02	1.03	0.69
23	7.47	0.26	0.05	4.58	0.24	12.60	0.00	0.19	0.19	12.41	0.93	0.01	0.92	0.61
24	7.47	0.27	0.05	4.58	0.25	12.62	0.00	0.19	0.19	12.42	0.83	0.01	0.82	0.54
25	7.47	0.27	0.05	4.58	0.26	12.63	0.00	0.19	0.19	12.44	0.74	0.01	0.73	0.47
26	7.47	0.27	0.05	4.58	0.26	12.63	0.00	0.19	0.19	12.44	0.66	0.01	0.65	0.41
27	7.47	0.27	0.05	4.58	0.27	12.64	0.00	0.19	0.19	12.45	0.59	0.01	0.58	0.36
28	7.47	0.28	0.05	4.58	0.27	12.65	0.00	0.19	0.19	12.45	0.53	0.01	0.52	0.32
29	7.47	0.78	0.05	4.58	0.28	13.16	0.00	0.19	0.19	12.97	0.49	0.01	0.48	0.29
30	7.47	0.28	0.05	4.58	0.29	12.67	0.00	0.19	0.19	12.48	0.42	0.01	0.42	0.24
TOTAL	148.28	7.15	1.32	101.04	5.87	263.66	53.16	5.17	58.34	205.32	41.17	40.89	0.28	-6.35

* Costs increased by 130%

NET PRESENT WORTH = Rs. 0.28182 million

B/C RATIO = 1.01 : 1

IRR = 12.08 %

721

TABLE 9.54.1

SENSITIVITY ANALYSIS OF PAHARPUR SYSTEM
ALT 1 *

(Rs.Million)

YEARS	BENEFITS: Increase in Agri. Prod.	Savings in off-Road Hauling Exp.	Canal O&M Savings	Vehicle Operating Cost (VOC) Savings	Time Savings	Total Benefits	COSTS: Capital Cost	O & M Cost	Total Cost	CASH FLOW	PRESENT WORTH: Benefits @ 12%	Costs @ 12%	CASH FLOW 16%	CASH FLOW 18%
0	0.00	0.00	0.00	0.00	0.00	0.00	0.00	0.00	0.00	0.00	0.00	0.00	0.00	0.00
1	0.00	0.00	0.00	0.00	0.00	0.00	6.96	0.00	6.96	-6.96	0.00	6.21	-6.00	-5.90
2	0.02	0.01	0.00	0.40	0.04	0.46	6.17	0.05	6.22	-5.76	0.37	4.96	-4.28	-4.14
3	0.10	0.02	0.00	0.98	0.09	1.19	4.82	0.11	4.93	-3.74	0.85	3.51	-2.40	-2.28
4	0.24	0.05	0.00	1.76	0.16	2.21	4.79	0.19	4.98	-2.77	1.40	3.16	-1.53	-1.43
5	0.47	0.07	0.00	2.61	0.24	3.39	3.24	0.27	3.51	-0.12	1.92	1.99	-0.06	-0.05
6	0.68	0.08	0.00	3.23	0.30	4.29	0.00	0.32	0.32	3.98	2.17	0.16	1.63	1.47
7	0.83	0.09	0.00	3.39	0.31	4.61	0.00	0.32	0.32	4.30	2.09	0.14	1.52	1.35
8	0.96	0.09	0.00	3.56	0.32	4.93	0.00	0.32	0.32	4.62	1.99	0.13	1.41	1.23
9	1.11	0.10	0.00	3.74	0.32	5.27	0.00	0.32	0.32	4.96	1.90	0.11	1.30	1.12
10	1.25	0.11	0.00	3.93	0.33	5.62	0.00	0.32	0.32	5.30	1.81	0.10	1.20	1.01
11	1.32	0.11	0.00	4.13	0.34	5.91	0.00	0.32	0.32	5.59	1.70	0.09	1.09	0.91
12	1.40	0.12	0.00	4.34	0.36	6.22	0.00	0.32	0.32	5.90	1.60	0.08	0.99	0.81
13	1.48	0.13	0.00	4.56	0.37	6.53	0.00	0.32	0.32	6.22	1.50	0.07	0.90	0.72
14	1.55	0.14	0.00	4.79	0.38	6.86	0.00	0.32	0.32	6.54	1.40	0.06	0.82	0.64
15	1.62	0.15	0.00	5.04	0.40	7.20	0.00	0.32	0.32	6.89	1.32	0.06	0.74	0.58
16	1.70	0.16	0.00	5.30	0.41	7.56	0.00	0.32	0.32	7.25	1.23	0.05	0.67	0.51
17	1.77	0.16	0.00	5.58	0.42	7.94	0.00	0.32	0.32	7.62	1.16	0.05	0.61	0.46
18	1.85	0.17	0.00	5.87	0.43	8.33	0.00	0.32	0.32	8.01	1.08	0.04	0.55	0.41
19	1.94	0.18	0.00	6.17	0.45	8.74	0.00	0.32	0.32	8.42	1.01	0.04	0.50	0.36
20	2.02	0.19	0.00	6.49	0.46	9.16	0.00	0.32	0.32	8.85	0.95	0.03	0.45	0.32
21	2.02	0.20	0.00	6.49	0.48	9.19	0.00	0.32	0.32	8.87	0.85	0.03	0.39	0.27
22	2.02	0.21	0.00	6.49	0.50	9.21	0.00	0.32	0.32	8.90	0.76	0.03	0.34	0.23
23	2.02	0.22	0.00	6.49	0.51	9.24	0.00	0.32	0.32	8.92	0.68	0.02	0.29	0.20
24	2.02	0.22	0.00	6.49	0.52	9.25	0.00	0.32	0.32	8.94	0.61	0.02	0.25	0.17
25	2.02	0.23	0.00	6.49	0.54	9.28	0.00	0.32	0.32	8.96	0.55	0.02	0.22	0.14
26	2.02	0.24	0.00	6.49	0.56	9.31	0.00	0.32	0.32	8.99	0.49	0.02	0.19	0.12
27	2.02	0.25	0.00	6.49	0.58	9.33	0.00	0.32	0.32	9.02	0.44	0.01	0.16	0.10
28	2.02	0.25	0.00	6.49	0.60	9.37	0.00	0.32	0.32	9.05	0.39	0.01	0.14	0.09
29	2.02	0.26	0.00	6.49	0.62	9.39	0.00	0.32	0.32	9.08	0.35	0.01	0.12	0.07
30	2.02	0.27	0.00	6.49	0.64	9.42	0.00	0.32	0.32	9.11	0.31	0.01	0.11	0.06
TOTAL	42.46	4.49	0.00	140.80	11.66	199.42	25.98	8.52	34.50	164.92	32.89	21.24	2.38	-0.42

* Benefits decreased by 10%

NET PRESENT WORTH = Rs. 11.6449 million

B/C RATIO = 1.55 : 1

IRR = 17.70 %

TABLE 9.54.2

SENSITIVITY ANALYSIS OF PAHARPUR SYSTEM
ALT II *

(Rs.Million)

YEARS	BENEFITS: Increase in Agri. Prod.	Savings in off-Road Hauling Exp.	Canal O&M Savings	Vehicle Operating Cost(VOC) Savings	Time Savings	Total Benefits	COSTS: Capital Cost	O & M Cost	Total Cost	CASH FLOW	PRESENT WORTH: Benefits @ 12%	Costs @ 12%	CASH FLOW 16%	CASH FLOW 18%
0	0.00	0.00	0.00	0.00	0.00	0.00	0.00	0.00	0.00	0.00	0.00	0.00	0.00	0.00
1	0.00	0.00	0.00	0.00	0.00	0.00	7.65	0.00	7.65	-7.65	0.00	6.83	-6.60	-6.49
2	0.02	0.01	0.00	0.44	0.04	0.51	6.79	0.05	6.84	-6.32	0.41	5.45	-4.70	-4.54
3	0.11	0.03	0.00	1.09	0.10	1.32	5.31	0.11	5.42	-4.09	0.94	3.86	-2.62	-2.49
4	0.27	0.05	0.00	1.95	0.18	2.45	5.26	0.19	5.45	-3.00	1.56	3.47	-1.66	-1.55
5	0.52	0.07	0.00	2.90	0.27	3.77	3.56	0.27	3.83	-0.06	2.14	2.17	-0.03	-0.03
6	0.76	0.09	0.00	3.59	0.33	4.77	0.00	0.32	0.32	4.45	2.42	0.16	1.83	1.65
7	0.92	0.10	0.00	3.77	0.34	5.13	0.00	0.32	0.32	4.81	2.32	0.14	1.70	1.51
8	1.07	0.11	0.00	3.96	0.35	5.48	0.00	0.32	0.32	5.17	2.21	0.13	1.58	1.37
9	1.23	0.11	0.00	4.16	0.36	5.86	0.00	0.32	0.32	5.54	2.11	0.11	1.46	1.25
10	1.39	0.12	0.00	4.37	0.37	6.25	0.00	0.32	0.32	5.93	2.01	0.10	1.34	1.13
11	1.47	0.13	0.00	4.59	0.38	6.57	0.00	0.32	0.32	6.25	1.89	0.09	1.22	1.01
12	1.55	0.14	0.00	4.82	0.40	6.91	0.00	0.32	0.32	6.59	1.77	0.08	1.11	0.90
13	1.64	0.14	0.00	5.07	0.41	7.26	0.00	0.32	0.32	6.95	1.66	0.07	1.01	0.81
14	1.72	0.15	0.00	5.33	0.42	7.62	0.00	0.32	0.32	7.30	1.56	0.06	0.91	0.72
15	1.80	0.16	0.00	5.60	0.44	8.00	0.00	0.32	0.32	7.69	1.46	0.06	0.83	0.64
16	1.89	0.17	0.00	5.89	0.45	8.40	0.00	0.32	0.32	8.09	1.37	0.05	0.75	0.57
17	1.97	0.18	0.00	6.20	0.47	8.82	0.00	0.32	0.32	8.50	1.28	0.05	0.68	0.51
18	2.06	0.19	0.00	6.52	0.48	9.25	0.00	0.32	0.32	8.93	1.20	0.04	0.62	0.45
19	2.15	0.20	0.00	6.86	0.50	9.71	0.00	0.32	0.32	9.40	1.13	0.04	0.56	0.40
20	2.24	0.22	0.00	7.22	0.51	10.18	0.00	0.32	0.32	9.86	1.06	0.03	0.51	0.36
21	2.24	0.22	0.00	7.22	0.53	10.21	0.00	0.32	0.32	9.89	0.94	0.03	0.44	0.31
22	2.24	0.23	0.00	7.22	0.55	10.24	0.00	0.32	0.32	9.92	0.85	0.03	0.38	0.26
23	2.24	0.24	0.00	7.22	0.57	10.26	0.00	0.32	0.32	9.95	0.76	0.02	0.33	0.22
24	2.24	0.25	0.00	7.22	0.58	10.28	0.00	0.32	0.32	9.97	0.68	0.02	0.28	0.19
25	2.24	0.26	0.00	7.22	0.60	10.31	0.00	0.32	0.32	9.99	0.61	0.02	0.24	0.16
26	2.24	0.26	0.00	7.22	0.62	10.34	0.00	0.32	0.32	10.02	0.54	0.02	0.21	0.14
27	2.24	0.27	0.00	7.22	0.64	10.37	0.00	0.32	0.32	10.05	0.49	0.01	0.18	0.12
28	2.24	0.28	0.00	7.22	0.67	10.41	0.00	0.32	0.32	10.09	0.44	0.01	0.16	0.10
29	2.24	0.29	0.00	7.22	0.69	10.44	0.00	0.32	0.32	10.12	0.39	0.01	0.14	0.08
30	2.24	0.30	0.00	7.22	0.71	10.47	0.00	0.32	0.32	10.15	0.35	0.01	0.12	0.07
TOTAL	47.18	4.99	0.00	156.45	12.96	221.58	28.58	8.52	37.10	184.48	36.54	23.19	2.98	-0.16

* Costs increased by 10%

NET PRESENT WORTH = Rs. 13.3544 million

B/C RATIO = 1.58 : 1

IRR = 17.90 %

723

TABLE 9.54.3

SENSITIVITY ANALYSIS OF PAHARPUR SYSTEM
ALT III *

(Rs.Million)

YEARS	BENEFITS: Increase in Agri. Prod.	BENEFITS: Savings in off-Road Hauling Exp.	BENEFITS: Canal O&M Savings	BENEFITS: Vehicle Operating Cost(VOC) Savings	BENEFITS: Time Savings	BENEFITS: Total Benefits	COSTS: Capital Cost	COSTS: O & M Cost	COSTS: Total Cost	CASH FLOW	PRESENT WORTH: Benefits @ 12%	PRESENT WORTH: Costs @ 12%	PRESENT WORTH: CASH FLOW 16%	PRESENT WORTH: CASH FLOW 18%
0	0.00	0.00	0.00	0.00	0.00	0.00	0.00	0.00	0.00	0.00	0.00	0.00	0.00	0.00
1	0.00	0.00	0.00	0.00	0.00	0.00	7.65	0.00	7.65	-7.65	0.00	6.83	-6.60	-6.49
2	0.02	0.01	0.00	0.40	0.04	0.46	6.79	0.05	6.84	-6.38	0.37	5.45	-4.74	-4.58
3	0.10	0.02	0.00	0.98	0.09	1.19	5.31	0.11	5.42	-4.23	0.85	3.86	-2.71	-2.57
4	0.24	0.05	0.00	1.76	0.16	2.21	5.26	0.19	5.45	-3.25	1.40	3.47	-1.79	-1.67
5	0.47	0.07	0.00	2.61	0.24	3.39	3.56	0.27	3.83	-0.44	1.92	2.17	-0.21	-0.19
6	0.68	0.08	0.00	3.23	0.30	4.29	0.00	0.32	0.32	3.98	2.17	0.16	1.63	1.47
7	0.83	0.09	0.00	3.39	0.31	4.61	0.00	0.32	0.32	4.30	2.09	0.14	1.52	1.35
8	0.96	0.09	0.00	3.56	0.32	4.93	0.00	0.32	0.32	4.62	1.99	0.13	1.41	1.23
9	1.11	0.10	0.00	3.74	0.32	5.27	0.00	0.32	0.32	4.96	1.90	0.11	1.30	1.12
10	1.25	0.11	0.00	3.93	0.33	5.62	0.00	0.32	0.32	5.30	1.81	0.10	1.20	1.01
11	1.32	0.11	0.00	4.13	0.34	5.91	0.00	0.32	0.32	5.59	1.70	0.09	1.09	0.91
12	1.40	0.12	0.00	4.34	0.36	6.22	0.00	0.32	0.32	5.90	1.60	0.08	0.99	0.81
13	1.48	0.13	0.00	4.56	0.37	6.53	0.00	0.32	0.32	6.22	1.50	0.07	0.90	0.72
14	1.55	0.14	0.00	4.79	0.38	6.86	0.00	0.32	0.32	6.54	1.40	0.06	0.82	0.64
15	1.62	0.15	0.00	5.04	0.40	7.20	0.00	0.32	0.32	6.89	1.32	0.06	0.74	0.58
16	1.70	0.16	0.00	5.30	0.41	7.56	0.00	0.32	0.32	7.25	1.23	0.05	0.67	0.51
17	1.77	0.16	0.00	5.58	0.42	7.94	0.00	0.32	0.32	7.62	1.16	0.05	0.61	0.46
18	1.85	0.17	0.00	5.87	0.43	8.33	0.00	0.32	0.32	8.01	1.08	0.04	0.55	0.41
19	1.94	0.18	0.00	6.17	0.45	8.74	0.00	0.32	0.32	8.42	1.01	0.04	0.50	0.36
20	2.02	0.19	0.00	6.49	0.46	9.16	0.00	0.32	0.32	8.85	0.95	0.03	0.45	0.32
21	2.02	0.20	0.00	6.49	0.48	9.19	0.00	0.32	0.32	8.87	0.85	0.03	0.39	0.27
22	2.02	0.21	0.00	6.49	0.50	9.21	0.00	0.32	0.32	8.90	0.76	0.03	0.34	0.23
23	2.02	0.22	0.00	6.49	0.51	9.24	0.00	0.32	0.32	8.92	0.68	0.02	0.29	0.20
24	2.02	0.22	0.00	6.49	0.52	9.25	0.00	0.32	0.32	8.94	0.61	0.02	0.25	0.17
25	2.02	0.23	0.00	6.49	0.54	9.28	0.00	0.32	0.32	8.96	0.55	0.02	0.22	0.14
26	2.02	0.24	0.00	6.49	0.56	9.31	0.00	0.32	0.32	8.99	0.49	0.02	0.19	0.12
27	2.02	0.25	0.00	6.49	0.58	9.33	0.00	0.32	0.32	9.02	0.44	0.01	0.16	0.10
28	2.02	0.25	0.00	6.49	0.60	9.37	0.00	0.32	0.32	9.05	0.39	0.01	0.14	0.09
29	2.02	0.26	0.00	6.49	0.62	9.39	0.00	0.32	0.32	9.08	0.35	0.01	0.12	0.07
30	2.02	0.27	0.00	6.49	0.64	9.42	0.00	0.32	0.32	9.11	0.31	0.01	0.11	0.06
TOTAL	42.46	4.49	0.00	140.80	11.66	199.42	28.58	8.52	37.10	162.32	32.89	23.19	0.59	-2.13

* Benefits decreased & Cost increased by 10%

NET PRESENT WORTH = Rs. 9.70025 million

B/C RATIO = 1.42 : 1

IRR = 16.43 %

724

TABLE 9.54.4

SENSITIVITY ANALYSIS OF PAHARPUR SYSTEM
ALT IV *

(Rs.Million)

YEARS	BENEFITS: Increase in Agri. Prod.	Savings in off-Road Hauling Exp.	Canal O&M Savings	Vehicle Operating Cost (VOC) Savings	Time Savings	Total Benefits	COSTS: Capital Cost	O & M Cost	Total Cost	CASH FLOW	PRESENT WORTH: Benefits @ 12%	Costs @ 12%	CASH FLOW 12%	CASH FLOW 14%
0	0.00	0.00	0.00	0.00	0.00	0.00	0.00	0.00	0.00	0.00	0.00	0.00	0.00	0.00
1	0.00	0.00	0.00	0.00	0.00	0.00	6.96	0.00	6.96	-6.96	0.00	6.21	-6.21	-6.10
2	0.01	0.01	0.00	0.26	0.02	0.30	6.17	0.05	6.22	-5.92	0.24	4.96	-4.72	-4.55
3	0.06	0.02	0.00	0.64	0.06	0.78	4.82	0.11	4.93	-4.15	0.56	3.51	-2.96	-2.80
4	0.16	0.03	0.00	1.15	0.11	1.45	4.79	0.19	4.98	-3.53	0.92	3.16	-2.24	-2.09
5	0.31	0.04	0.00	1.71	0.16	2.22	3.24	0.27	3.51	-1.28	1.26	1.99	-0.73	-0.67
6	0.45	0.05	0.00	2.12	0.19	2.81	0.00	0.32	0.32	2.50	1.43	0.16	1.27	1.14
7	0.54	0.06	0.00	2.22	0.20	3.02	0.00	0.32	0.32	2.71	1.37	0.14	1.23	1.08
8	0.63	0.06	0.00	2.33	0.21	3.23	0.00	0.32	0.32	2.92	1.31	0.13	1.18	1.02
9	0.73	0.07	0.00	2.45	0.21	3.46	0.00	0.32	0.32	3.14	1.25	0.11	1.13	0.97
10	0.82	0.07	0.00	2.58	0.22	3.68	0.00	0.32	0.32	3.37	1.19	0.10	1.08	0.91
11	0.87	0.07	0.00	2.71	0.22	3.87	0.00	0.32	0.32	3.56	1.11	0.09	1.02	0.84
12	0.91	0.08	0.00	2.84	0.24	4.08	0.00	0.32	0.32	3.76	1.05	0.08	0.96	0.78
13	0.97	0.08	0.00	2.99	0.24	4.28	0.00	0.32	0.32	3.97	0.98	0.07	0.91	0.72
14	1.01	0.09	0.00	3.14	0.25	4.50	0.00	0.32	0.32	4.18	0.92	0.06	0.86	0.67
15	1.06	0.10	0.00	3.30	0.26	4.72	0.00	0.32	0.32	4.41	0.86	0.06	0.81	0.62
16	1.12	0.10	0.00	3.48	0.27	4.96	0.00	0.32	0.32	4.64	0.81	0.05	0.76	0.57
17	1.16	0.11	0.00	3.66	0.28	5.20	0.00	0.32	0.32	4.89	0.76	0.05	0.71	0.53
18	1.22	0.11	0.00	3.85	0.28	5.46	0.00	0.32	0.32	5.14	0.71	0.04	0.67	0.49
19	1.27	0.12	0.00	4.05	0.30	5.73	0.00	0.32	0.32	5.41	0.67	0.04	0.63	0.45
20	1.32	0.13	0.00	4.26	0.30	6.01	0.00	0.32	0.32	5.69	0.62	0.03	0.59	0.41
21	1.32	0.13	0.00	4.26	0.31	6.02	0.00	0.32	0.32	5.71	0.56	0.03	0.53	0.36
22	1.32	0.14	0.00	4.26	0.32	6.04	0.00	0.32	0.32	5.72	0.50	0.03	0.47	0.32
23	1.32	0.14	0.00	4.26	0.34	6.06	0.00	0.32	0.32	5.74	0.45	0.02	0.42	0.28
24	1.32	0.15	0.00	4.26	0.34	6.07	0.00	0.32	0.32	5.75	0.40	0.02	0.38	0.25
25	1.32	0.15	0.00	4.26	0.35	6.08	0.00	0.32	0.32	5.77	0.36	0.02	0.34	0.22
26	1.32	0.16	0.00	4.26	0.37	6.10	0.00	0.32	0.32	5.78	0.32	0.02	0.30	0.19
27	1.32	0.16	0.00	4.26	0.38	6.12	0.00	0.32	0.32	5.80	0.29	0.01	0.27	0.17
28	1.32	0.17	0.00	4.26	0.40	6.14	0.00	0.32	0.32	5.82	0.26	0.01	0.24	0.15
29	1.32	0.17	0.00	4.26	0.41	6.16	0.00	0.32	0.32	5.84	0.23	0.01	0.22	0.13
30	1.32	0.18	0.00	4.26	0.42	6.18	0.00	0.32	0.32	5.86	0.21	0.01	0.20	0.12
TOTAL	27.84	2.94	0.00	92.30	7.65	130.73	25.98	8.52	34.50	96.23	21.56	21.24	0.32	-2.84

* Benefits decreased by 41%

NET PRESENT WORTH = Rs. 0.31680 million

B/C RATIO = 1.01 : 1

IRR = 12.20 %

725

TABLE 9.54.5

SENSITIVITY ANALYSIS OF PAHARPUR SYSTEM
ALT V *

(Rs.Million)

YEARS	BENEFITS: Increase in Agri. Prod.	Savings in off-Road Hauling Exp.	Canal O&M Savings	Vehicle Operating Cost(VOC) Savings	Time Savings	Total Benefits	COSTS: Capital Cost	O & M Cost	Total Cost	CASH FLOW	PRESENT WORTH: Benefits @ 12%	Costs @ 12%	CASH FLOW 12%	CASH FLOW 14%
0	0.00	0.00	0.00	0.00	0.00	0.00	0.00	0.00	0.00	0.00	0.00	0.00	0.00	0.00
1	0.00	0.00	0.00	0.00	0.00	0.00	12.39	0.00	12.39	-12.39	0.00	11.06	-11.06	-10.87
2	0.02	0.01	0.00	0.44	0.04	0.51	10.99	0.05	11.04	-10.52	0.41	8.80	-8.39	-8.10
3	0.11	0.03	0.00	1.09	0.10	1.32	8.58	0.11	8.70	-7.37	0.94	6.19	-5.25	-4.98
4	0.27	0.05	0.00	1.95	0.18	2.45	8.52	0.19	8.71	-6.25	1.56	5.53	-3.97	-3.70
5	0.52	0.07	0.00	2.90	0.27	3.77	5.77	0.27	6.03	-2.27	2.14	3.42	-1.29	-1.18
6	0.76	0.09	0.00	3.59	0.33	4.77	0.00	0.32	0.32	4.45	2.42	0.16	2.26	2.03
7	0.92	0.10	0.00	3.77	0.34	5.13	0.00	0.32	0.32	4.81	2.32	0.14	2.18	1.92
8	1.07	0.11	0.00	3.96	0.35	5.48	0.00	0.32	0.32	5.17	2.21	0.13	2.09	1.81
9	1.23	0.11	0.00	4.16	0.36	5.86	0.00	0.32	0.32	5.54	2.11	0.11	2.00	1.70
10	1.39	0.12	0.00	4.37	0.37	6.25	0.00	0.32	0.32	5.93	2.01	0.10	1.91	1.60
11	1.47	0.13	0.00	4.59	0.38	6.57	0.00	0.32	0.32	6.25	1.89	0.09	1.80	1.48
12	1.55	0.14	0.00	4.82	0.40	6.91	0.00	0.32	0.32	6.59	1.77	0.08	1.69	1.37
13	1.64	0.14	0.00	5.07	0.41	7.26	0.00	0.32	0.32	6.95	1.66	0.07	1.59	1.26
14	1.72	0.15	0.00	5.33	0.42	7.62	0.00	0.32	0.32	7.30	1.56	0.06	1.49	1.17
15	1.80	0.16	0.00	5.60	0.44	8.00	0.00	0.32	0.32	7.69	1.46	0.06	1.40	1.08
16	1.89	0.17	0.00	5.89	0.45	8.40	0.00	0.32	0.32	8.09	1.37	0.05	1.32	0.99
17	1.97	0.18	0.00	6.20	0.47	8.82	0.00	0.32	0.32	8.50	1.28	0.05	1.24	0.92
18	2.06	0.19	0.00	6.52	0.48	9.25	0.00	0.32	0.32	8.93	1.20	0.04	1.16	0.84
19	2.15	0.20	0.00	6.86	0.50	9.71	0.00	0.32	0.32	9.40	1.13	0.04	1.09	0.78
20	2.24	0.22	0.00	7.22	0.51	10.18	0.00	0.32	0.32	9.86	1.06	0.03	1.02	0.72
21	2.24	0.22	0.00	7.22	0.53	10.21	0.00	0.32	0.32	9.89	0.94	0.03	0.92	0.63
22	2.24	0.23	0.00	7.22	0.55	10.24	0.00	0.32	0.32	9.92	0.85	0.03	0.82	0.56
23	2.24	0.24	0.00	7.22	0.57	10.26	0.00	0.32	0.32	9.95	0.76	0.02	0.73	0.49
24	2.24	0.25	0.00	7.22	0.58	10.28	0.00	0.32	0.32	9.97	0.68	0.02	0.66	0.43
25	2.24	0.26	0.00	7.22	0.60	10.31	0.00	0.32	0.32	9.99	0.61	0.02	0.59	0.38
26	2.24	0.26	0.00	7.22	0.62	10.34	0.00	0.32	0.32	10.02	0.54	0.02	0.53	0.33
27	2.24	0.27	0.00	7.22	0.64	10.37	0.00	0.32	0.32	10.05	0.49	0.01	0.47	0.29
28	2.24	0.28	0.00	7.22	0.67	10.41	0.00	0.32	0.32	10.09	0.44	0.01	0.42	0.26
29	2.24	0.29	0.00	7.22	0.69	10.44	0.00	0.32	0.32	10.12	0.39	0.01	0.38	0.23
30	2.24	0.30	0.00	7.22	0.71	10.47	0.00	0.32	0.32	10.15	0.35	0.01	0.34	0.20
TOTAL	47.18	4.99	0.00	156.45	12.96	221.58	46.24	8.52	54.76	166.81	36.54	36.41	0.13	-5.36

* Costs increased by 78%

NET PRESENT WORTH = Rs. 0.13051 million

B/C RATIO = 1.00 : 1

IRR = 12.05 %

726

TABLE 9.55.1

SENSITIVITY ANALYSIS OF MARWAT SYSTEM
ALT I *

(Rs.Million)

YEARS	BENEFITS: Increase in Agri. Prod.	Savings in off-Road Hauling Exp.	Canal O&M Savings	Vehicle Operating Cost (VOC) Savings	Time Savings	Total Benefits	COSTS: Capital Cost	O & M Cost	Total Cost	CASH FLOW	PRESENT WORTH: Benefits @ 12%	Costs @ 12%	CASH FLOW 34%	CASH FLOW 36%
0	0.00	0.00	0.00	0.00	0.00	0.00	0.00	0.00	0.00	0.00	0.00	0.00	0.00	0.00
1	0.00	0.00	0.00	0.00	0.00	0.00	7.09	0.00	7.09	-7.09	0.00	6.33	-5.29	-5.21
2	0.19	0.02	.00	0.41	0.09	0.71	6.29	0.04	6.33	-5.62	0.57	5.05	-3.13	-3.04
3	0.90	0.06	0.01	1.00	0.22	2.18	4.91	0.10	5.01	-2.83	1.55	3.57	-1.18	-1.13
4	2.30	0.10	0.01	1.78	0.38	4.58	4.87	0.17	5.04	-0.46	2.91	3.20	-0.14	-0.13
5	4.37	0.15	0.02	2.63	0.55	7.71	3.30	0.24	3.54	4.18	4.38	2.01	0.97	0.90
6	6.43	0.18	0.02	3.23	0.67	10.52	0.00	0.28	0.28	10.25	5.33	0.14	1.77	1.62
7	7.72	0.19	0.02	3.37	0.68	11.99	0.00	0.28	0.28	11.71	5.42	0.13	1.51	1.36
8	9.03	0.20	0.02	3.51	0.71	13.47	0.00	0.28	0.28	13.19	5.44	0.11	1.27	1.13
9	10.33	0.21	0.02	3.67	0.73	14.96	0.00	0.28	0.28	14.68	5.39	0.10	1.05	0.92
10	11.64	0.22	0.02	3.83	0.75	16.45	0.00	0.28	0.28	16.17	5.30	0.09	0.87	0.75
11	12.13	0.23	0.02	3.99	0.77	17.15	0.00	0.28	0.28	16.87	4.93	0.08	0.67	0.57
12	12.64	0.25	0.02	4.17	0.79	17.87	0.00	0.28	0.28	17.59	4.59	0.07	0.52	0.44
13	13.14	0.26	0.02	4.35	0.81	18.59	0.00	0.28	0.28	18.31	4.26	0.06	0.41	0.34
14	13.64	0.27	0.02	4.55	0.84	19.32	0.00	0.28	0.28	19.05	3.95	0.06	0.32	0.26
15	14.15	0.29	0.02	4.75	0.86	20.06	0.00	0.28	0.28	19.78	3.67	0.05	0.25	0.20
16	14.65	0.30	0.02	4.96	0.88	20.82	0.00	0.28	0.28	20.54	3.40	0.05	0.19	0.15
17	15.16	0.32	0.02	5.18	0.91	21.59	0.00	0.28	0.28	21.31	3.14	0.04	0.15	0.11
18	15.66	0.33	0.02	5.42	0.94	22.37	0.00	0.28	0.28	22.09	2.91	0.04	0.11	0.09
19	16.17	0.35	0.02	5.66	0.95	23.16	0.00	0.28	0.28	22.88	2.69	0.03	0.09	0.07
20	16.68	0.37	0.02	5.92	0.98	23.97	0.00	0.28	0.28	23.69	2.48	0.03	0.07	0.05
21	16.68	0.38	0.02	5.92	1.01	24.00	0.00	0.28	0.28	23.73	2.22	0.03	0.05	0.04
22	16.68	0.39	0.02	5.92	1.04	24.05	0.00	0.28	0.28	23.77	1.99	0.02	0.04	0.03
23	16.68	0.40	0.02	5.92	1.07	24.09	0.00	0.28	0.28	23.81	1.78	0.02	0.03	0.02
24	16.68	0.42	0.02	5.92	1.10	24.13	0.00	0.28	0.28	23.86	1.59	0.02	0.02	0.01
25	16.68	0.43	0.02	5.92	1.13	24.18	0.00	0.28	0.28	23.90	1.42	0.02	0.02	0.01
26	16.68	0.45	0.02	5.92	1.16	24.23	0.00	0.28	0.28	23.95	1.27	0.01	0.01	0.01
27	16.68	0.46	0.02	5.92	1.20	24.28	0.00	0.28	0.28	24.00	1.14	0.01	0.01	0.01
28	16.68	0.48	0.02	5.92	1.22	24.32	0.00	0.28	0.28	24.04	1.02	0.01	0.01	.00
29	16.68	0.49	0.02	5.92	1.26	24.37	0.00	0.28	0.28	24.09	0.91	0.01	.00	.00
30	16.68	0.51	0.02	5.92	1.30	24.42	0.00	0.28	0.28	24.14	0.82	0.01	.00	.00
TOTAL	363.69	8.70	0.65	131.53	24.98	529.56	26.46	7.52	33.98	495.58	86.47	21.39	0.67	-0.43

* Benefits decreased by 10%

NET PRESENT WORTH = Rs. 65.0776 million

B/C RATIO = 4.04 : 1

IRR = 35.22 %

727

TABLE 9.55.2

SENSITIVITY ANALYSIS OF MARWAT SYSTEM
ALT II *

(Rs.Million)

YEARS	BENEFITS: Increase in Agri. Prod.	Savings in off-Road Hauling Exp.	Canal O&M Savings	Vehicle Operating Cost (VOC) Savings	Time Savings	Total Benefits	COSTS: Capital Cost	O & M Cost	Total Cost	CASH FLOW	PRESENT WORTH: Benefits @ 12%	Costs @ 12%	CASH FLOW 34%	CASH FLOW 36%
0	0.00	0.00	0.00	0.00	0.00	0.00	0.00	0.00	0.00	0.00	0.00	0.00	0.00	0.00
1	0.00	0.00	0.00	0.00	0.00	0.00	7.80	0.00	7.80	-7.80	0.00	6.96	-5.82	-5.73
2	0.21	0.03	.00	0.45	0.10	0.79	6.92	0.04	6.96	-6.16	0.63	5.55	-3.43	-3.33
3	1.00	0.06	0.01	1.11	0.24	2.42	5.40	0.10	5.50	-3.08	1.72	3.92	-1.28	-1.23
4	2.56	0.11	0.02	1.98	0.42	5.09	5.36	0.17	5.53	-0.44	3.23	3.51	-0.14	-0.13
5	4.85	0.17	0.02	2.92	0.61	8.57	3.63	0.24	3.86	4.71	4.86	2.19	1.09	1.01
6	7.14	0.20	0.03	3.59	0.74	11.69	0.00	0.28	0.28	11.42	5.92	0.14	1.97	1.80
7	8.58	0.21	0.03	3.74	0.76	13.32	0.00	0.28	0.28	13.04	6.02	0.13	1.68	1.52
8	10.03	0.22	0.03	3.90	0.79	14.97	0.00	0.28	0.28	14.69	6.05	0.11	1.41	1.26
9	11.48	0.23	0.03	4.07	0.81	16.62	0.00	0.28	0.28	16.34	5.99	0.10	1.17	1.03
10	12.93	0.24	0.03	4.25	0.83	18.28	0.00	0.28	0.28	18.00	5.89	0.09	0.96	0.83
11	13.48	0.26	0.03	4.44	0.85	19.05	0.00	0.28	0.28	18.77	5.48	0.08	0.75	0.64
12	14.04	0.27	0.03	4.63	0.88	19.85	0.00	0.28	0.28	19.57	5.10	0.07	0.58	0.49
13	14.60	0.29	0.03	4.84	0.90	20.65	0.00	0.28	0.28	20.38	4.73	0.06	0.45	0.37
14	15.16	0.30	0.03	5.05	0.93	21.47	0.00	0.28	0.28	21.19	4.39	0.06	0.35	0.29
15	15.72	0.32	0.03	5.28	0.95	22.29	0.00	0.28	0.28	22.01	4.07	0.05	0.27	0.22
16	16.28	0.34	0.03	5.51	0.98	23.13	0.00	0.28	0.28	22.86	3.77	0.05	0.21	0.17
17	16.84	0.35	0.03	5.76	1.01	23.99	0.00	0.28	0.28	23.71	3.49	0.04	0.16	0.13
18	17.40	0.37	0.03	6.02	1.04	24.85	0.00	0.28	0.28	24.58	3.23	0.04	0.13	0.10
19	17.97	0.39	0.03	6.29	1.06	25.73	0.00	0.28	0.28	25.46	2.99	0.03	0.10	0.07
20	18.53	0.41	0.03	6.58	1.09	26.63	0.00	0.28	0.28	26.35	2.76	0.03	0.08	0.06
21	18.53	0.42	0.03	6.58	1.12	26.67	0.00	0.28	0.28	26.39	2.47	0.03	0.06	0.04
22	18.53	0.43	0.03	6.58	1.16	26.73	0.00	0.28	0.28	26.45	2.21	0.02	0.04	0.03
23	18.53	0.45	0.03	6.58	1.19	26.77	0.00	0.28	0.28	26.49	1.98	0.02	0.03	0.02
24	18.53	0.46	0.03	6.58	1.22	26.82	0.00	0.28	0.28	26.54	1.77	0.02	0.02	0.02
25	18.53	0.48	0.03	6.58	1.26	26.87	0.00	0.28	0.28	26.59	1.58	0.02	0.02	0.01
26	18.53	0.50	0.03	6.58	1.29	26.92	0.00	0.28	0.28	26.64	1.41	0.01	0.01	0.01
27	18.53	0.51	0.03	6.58	1.33	26.97	0.00	0.28	0.28	26.69	1.26	0.01	0.01	0.01
28	18.53	0.53	0.03	6.58	1.36	27.02	0.00	0.28	0.28	26.74	1.13	0.01	0.01	.00
29	18.53	0.55	0.03	6.58	1.40	27.08	0.00	0.28	0.28	26.80	1.01	0.01	0.01	.00
30	18.53	0.56	0.03	6.58	1.44	27.14	0.00	0.28	0.28	26.86	0.91	0.01	.00	.00
TOTAL	404.10	9.66	0.73	146.15	27.76	588.40	29.10	7.52	36.62	551.78	96.07	23.37	0.93	-0.30

* Costs increased by 10%

NET PRESENT WORTH = Rs. 72.7046 million

B/C RATIO = 4.11 : 1

IRR = 35.51 %

728

TABLE 9.55.3

SENSITIVITY ANALYSIS OF MARWAT SYSTEM
ALT III *

(Rs.Million)

YEARS	BENEFITS: Increase in Agri. Prod.	BENEFITS: Savings in off-Road Hauling Exp.	BENEFITS: Canal O&M Savings	BENEFITS: Vehicle Operating Cost(VOC) Savings	BENEFITS: Time Savings	BENEFITS: Total Benefits	COSTS: Capital Cost	COSTS: O & M Cost	COSTS: Total Cost	CASH FLOW	PRESENT WORTH: Benefits @ 12%	PRESENT WORTH: Costs @ 12%	PRESENT WORTH: CASH FLOW 32%	PRESENT WORTH: CASH FLOW 34%
0	0.00	0.00	0.00	0.00	0.00	0.00	0.00	0.00	0.00	0.00	0.00	0.00	0.00	0.00
1	0.00	0.00	0.00	0.00	0.00	0.00	7.80	0.00	7.80	-7.80	0.00	6.96	-5.91	-5.82
2	0.19	0.02	.00	0.41	0.09	0.71	6.92	0.04	6.96	-6.24	0.57	5.55	-3.58	-3.48
3	0.90	0.06	0.01	1.00	0.22	2.18	5.40	0.10	5.50	-3.32	1.55	3.92	-1.45	-1.38
4	2.30	0.10	0.01	1.78	0.38	4.58	5.36	0.17	5.53	-0.95	2.91	3.51	-0.31	-0.29
5	4.37	0.15	0.02	2.63	0.55	7.71	3.63	0.24	3.86	3.85	4.38	2.19	0.96	0.89
6	6.43	0.18	0.02	3.23	0.67	10.52	0.00	0.28	0.28	10.25	5.33	0.14	1.94	1.77
7	7.72	0.19	0.02	3.37	0.68	11.99	0.00	0.28	0.28	11.71	5.42	0.13	1.68	1.51
8	9.03	0.20	0.02	3.51	0.71	13.47	0.00	0.28	0.28	13.19	5.44	0.11	1.43	1.27
9	10.33	0.21	0.02	3.67	0.73	14.96	0.00	0.28	0.28	14.68	5.39	0.10	1.21	1.05
10	11.64	0.22	0.02	3.83	0.75	16.45	0.00	0.28	0.28	16.17	5.30	0.09	1.01	0.87
11	12.13	0.23	0.02	3.99	0.77	17.15	0.00	0.28	0.28	16.87	4.93	0.08	0.80	0.67
12	12.64	0.25	0.02	4.17	0.79	17.87	0.00	0.28	0.28	17.59	4.59	0.07	0.63	0.52
13	13.14	0.26	0.02	4.35	0.81	18.59	0.00	0.28	0.28	18.31	4.26	0.06	0.50	0.41
14	13.64	0.27	0.02	4.55	0.84	19.32	0.00	0.28	0.28	19.05	3.95	0.06	0.39	0.32
15	14.15	0.29	0.02	4.75	0.86	20.06	0.00	0.28	0.28	19.78	3.67	0.05	0.31	0.25
16	14.65	0.30	0.02	4.96	0.88	20.82	0.00	0.28	0.28	20.54	3.40	0.05	0.24	0.19
17	15.16	0.32	0.02	5.18	0.91	21.59	0.00	0.28	0.28	21.31	3.14	0.04	0.19	0.15
18	15.66	0.33	0.02	5.42	0.94	22.37	0.00	0.28	0.28	22.09	2.91	0.04	0.15	0.11
19	16.17	0.35	0.02	5.66	0.95	23.16	0.00	0.28	0.28	22.88	2.69	0.03	0.12	0.09
20	16.68	0.37	0.02	5.92	0.98	23.97	0.00	0.28	0.28	23.69	2.48	0.03	0.09	0.07
21	16.68	0.38	0.02	5.92	1.01	24.00	0.00	0.28	0.28	23.73	2.22	0.03	0.07	0.05
22	16.68	0.39	0.02	5.92	1.04	24.05	0.00	0.28	0.28	23.77	1.99	0.02	0.05	0.04
23	16.68	0.40	0.02	5.92	1.07	24.09	0.00	0.28	0.28	23.81	1.78	0.02	0.04	0.03
24	16.68	0.42	0.02	5.92	1.10	24.13	0.00	0.28	0.28	23.86	1.59	0.02	0.03	0.02
25	16.68	0.43	0.02	5.92	1.13	24.18	0.00	0.28	0.28	23.90	1.42	0.02	0.02	0.02
26	16.68	0.45	0.02	5.92	1.16	24.23	0.00	0.28	0.28	23.95	1.27	0.01	0.02	0.01
27	16.68	0.46	0.02	5.92	1.20	24.28	0.00	0.28	0.28	24.00	1.14	0.01	0.01	0.01
28	16.68	0.48	0.02	5.92	1.22	24.32	0.00	0.28	0.28	24.04	1.02	0.01	0.01	0.01
29	16.68	0.49	0.02	5.92	1.26	24.37	0.00	0.28	0.28	24.09	0.91	0.01	0.01	.00
30	16.68	0.51	0.02	5.92	1.30	24.42	0.00	0.28	0.28	24.14	0.82	0.01	0.01	.00
TOTAL	363.69	8.70	0.65	131.53	24.98	529.56	29.10	7.52	36.62	492.94	86.47	23.37	0.65	-0.65

* Benefits decreased & Cost increased by 10%

NET PRESENT WORTH = Rs. 63.0971 million

B/C RATIO = 3.70 : 1

IRR = 33.00 %

729

TABLE 9.55.4

SENSITIVITY ANALYSIS OF MARWAT SYSTEM
ALT IV *

(Rs.Million)

YEARS	BENEFITS: Increase in Agri. Prod.	Savings in off-Road Hauling Exp.	Canal O&M Savings	Vehicle Operating Cost (VOC) Savings	Time Savings	Total Benefits	COSTS: Capital Cost	O & M Cost	Total Cost	CASH FLOW	PRESENT WORTH: Benefits @ 12%	Costs @ 12%	CASH FLOW 12%	CASH FLOW 14%
0	0.00	0.00	0.00	0.00	0.00	0.00	0.00	0.00	0.00	0.00	0.00	0.00	0.00	0.00
1	0.00	0.00	0.00	0.00	0.00	0.00	7.09	0.00	7.09	-7.09	0.00	6.33	-6.33	-6.22
2	0.05	0.01	.00	0.10	0.02	0.18	6.29	0.04	6.33	-6.15	0.14	5.05	-4.90	-4.73
3	0.23	0.01	.00	0.25	0.05	0.54	4.91	0.10	5.01	-4.47	0.39	3.57	-3.18	-3.01
4	0.58	0.03	.00	0.44	0.09	1.14	4.87	0.17	5.04	-3.89	0.73	3.20	-2.47	-2.31
5	1.09	0.04	0.01	0.66	0.14	1.93	3.30	0.24	3.54	-1.61	1.09	2.01	-0.91	-0.83
6	1.61	0.05	0.01	0.81	0.17	2.63	0.00	0.28	0.28	2.35	1.33	0.14	1.19	1.07
7	1.93	0.05	0.01	0.84	0.17	3.00	0.00	0.28	0.28	2.72	1.36	0.13	1.23	1.09
8	2.26	0.05	0.01	0.88	0.18	3.37	0.00	0.28	0.28	3.09	1.36	0.11	1.25	1.08
9	2.58	0.05	0.01	0.92	0.18	3.74	0.00	0.28	0.28	3.46	1.35	0.10	1.25	1.06
10	2.91	0.05	0.01	0.96	0.19	4.11	0.00	0.28	0.28	3.83	1.32	0.09	1.23	1.03
11	3.03	0.06	0.01	1.00	0.19	4.29	0.00	0.28	0.28	4.01	1.23	0.08	1.15	0.95
12	3.16	0.06	0.01	1.04	0.20	4.47	0.00	0.28	0.28	4.19	1.15	0.07	1.07	0.87
13	3.29	0.07	0.01	1.09	0.20	4.65	0.00	0.28	0.28	4.37	1.07	0.06	1.00	0.80
14	3.41	0.07	0.01	1.14	0.21	4.83	0.00	0.28	0.28	4.55	0.99	0.06	0.93	0.73
15	3.54	0.07	0.01	1.19	0.21	5.02	0.00	0.28	0.28	4.74	0.92	0.05	0.87	0.66
16	3.66	0.08	0.01	1.24	0.22	5.21	0.00	0.28	0.28	4.93	0.85	0.05	0.80	0.61
17	3.79	0.08	0.01	1.30	0.23	5.40	0.00	0.28	0.28	5.12	0.79	0.04	0.75	0.55
18	3.92	0.08	0.01	1.35	0.23	5.59	0.00	0.28	0.28	5.31	0.73	0.04	0.69	0.50
19	4.04	0.09	0.01	1.42	0.24	5.79	0.00	0.28	0.28	5.51	0.67	0.03	0.64	0.46
20	4.17	0.09	0.01	1.48	0.25	5.99	0.00	0.28	0.28	5.71	0.62	0.03	0.59	0.42
21	4.17	0.09	0.01	1.48	0.25	6.00	0.00	0.28	0.28	5.72	0.56	0.03	0.53	0.37
22	4.17	0.10	0.01	1.48	0.26	6.01	0.00	0.28	0.28	5.73	0.50	0.02	0.47	0.32
23	4.17	0.10	0.01	1.48	0.27	6.02	0.00	0.28	0.28	5.74	0.44	0.02	0.42	0.28
24	4.17	0.10	0.01	1.48	0.27	6.03	0.00	0.28	0.28	5.75	0.40	0.02	0.38	0.25
25	4.17	0.11	0.01	1.48	0.28	6.05	0.00	0.28	0.28	5.77	0.36	0.02	0.34	0.22
26	4.17	0.11	0.01	1.48	0.29	6.06	0.00	0.28	0.28	5.78	0.32	0.01	0.30	0.19
27	4.17	0.11	0.01	1.48	0.30	6.07	0.00	0.28	0.28	5.79	0.28	0.01	0.27	0.17
28	4.17	0.12	0.01	1.48	0.31	6.08	0.00	0.28	0.28	5.80	0.25	0.01	0.24	0.15
29	4.17	0.12	0.01	1.48	0.32	6.09	0.00	0.28	0.28	5.81	0.23	0.01	0.22	0.13
30	4.17	0.13	0.01	1.48	0.32	6.11	0.00	0.28	0.28	5.83	0.20	0.01	0.19	0.11
TOTAL	90.92	2.17	0.16	32.88	6.25	132.39	26.46	7.52	33.98	98.41	21.62	21.39	0.23	-3.04

* Benefits decreased by 77.5%

NET PRESENT WORTH = Rs. 0.22703 million

B/C RATIO = 1.01 : 1

IRR = 12.14 %

730

TABLE 9.55.5

SENSITIVITY ANALYSIS OF MARWAT SYSTEM
ALT V *

(Rs.Million)

YEARS	BENEFITS: Increase in Agri. Prod.	Savings in off-Road Hauling Exp.	Canal O&M Savings	Vehicle Operating Cost(VOC) Savings	Time Savings	Total Benefits	COSTS: Capital Cost	O & M Cost	Total Cost	CASH FLOW	PRESENT WORTH: Benefits @ 12%	Costs @ 12%	CASH FLOW 12%	CASH FLOW 14%
0	0.00	0.00	0.00	0.00	0.00	0.00	0.00	0.00	0.00	0.00	0.00	0.00	0.00	0.00
1	0.00	0.00	0.00	0.00	0.00	0.00	33.66	0.00	33.66	-33.66	0.00	30.06	-30.06	-29.53
2	0.21	0.03	.00	0.45	0.10	0.79	29.87	0.04	29.91	-29.12	0.63	23.84	-23.21	-22.40
3	1.00	0.06	0.01	1.11	0.24	2.42	23.33	0.10	23.43	-21.01	1.72	16.68	-14.96	-14.18
4	2.56	0.11	0.02	1.98	0.42	5.09	23.14	0.17	23.31	-18.22	3.23	14.81	-11.58	-10.79
5	4.85	0.17	0.02	2.92	0.61	8.57	15.67	0.24	15.90	-7.33	4.86	9.02	-4.16	-3.81
6	7.14	0.20	0.03	3.59	0.74	11.69	0.00	0.28	0.28	11.42	5.92	0.14	5.78	5.20
7	8.58	0.21	0.03	3.74	0.76	13.32	0.00	0.28	0.28	13.04	6.02	0.13	5.90	5.21
8	10.03	0.22	0.03	3.90	0.79	14.97	0.00	0.28	0.28	14.69	6.05	0.11	5.93	5.15
9	11.48	0.23	0.03	4.07	0.81	16.62	0.00	0.28	0.28	16.34	5.99	0.10	5.89	5.03
10	12.93	0.24	0.03	4.25	0.83	18.28	0.00	0.28	0.28	18.00	5.89	0.09	5.80	4.86
11	13.48	0.26	0.03	4.44	0.85	19.05	0.00	0.28	0.28	18.77	5.48	0.08	5.40	4.44
12	14.04	0.27	0.03	4.63	0.88	19.85	0.00	0.28	0.28	19.57	5.10	0.07	5.02	4.06
13	14.60	0.29	0.03	4.84	0.90	20.65	0.00	0.28	0.28	20.38	4.73	0.06	4.67	3.71
14	15.16	0.30	0.03	5.05	0.93	21.47	0.00	0.28	0.28	21.19	4.39	0.06	4.34	3.38
15	15.72	0.32	0.03	5.28	0.95	22.29	0.00	0.28	0.28	22.01	4.07	0.05	4.02	3.08
16	16.28	0.34	0.03	5.51	0.98	23.13	0.00	0.28	0.28	22.86	3.77	0.05	3.73	2.81
17	16.84	0.35	0.03	5.76	1.01	23.99	0.00	0.28	0.28	23.71	3.49	0.04	3.45	2.56
18	17.40	0.37	0.03	6.02	1.04	24.85	0.00	0.28	0.28	24.58	3.23	0.04	3.20	2.32
19	17.97	0.39	0.03	6.29	1.06	25.73	0.00	0.28	0.28	25.46	2.99	0.03	2.96	2.11
20	18.53	0.41	0.03	6.58	1.09	26.63	0.00	0.28	0.28	26.35	2.76	0.03	2.73	1.92
21	18.53	0.42	0.03	6.58	1.12	26.67	0.00	0.28	0.28	26.39	2.47	0.03	2.44	1.68
22	18.53	0.43	0.03	6.58	1.16	26.73	0.00	0.28	0.28	26.45	2.21	0.02	2.19	1.48
23	18.53	0.45	0.03	6.58	1.19	26.77	0.00	0.28	0.28	26.49	1.98	0.02	1.95	1.30
24	18.53	0.46	0.03	6.58	1.22	26.82	0.00	0.28	0.28	26.54	1.77	0.02	1.75	1.14
25	18.53	0.48	0.03	6.58	1.26	26.87	0.00	0.28	0.28	26.59	1.58	0.02	1.56	1.00
26	18.53	0.50	0.03	6.58	1.29	26.92	0.00	0.28	0.28	26.64	1.41	0.01	1.40	0.88
27	18.53	0.51	0.03	6.58	1.33	26.97	0.00	0.28	0.28	26.69	1.26	0.01	1.25	0.78
28	18.53	0.53	0.03	6.58	1.36	27.02	0.00	0.28	0.28	26.74	1.13	0.01	1.12	0.68
29	18.53	0.55	0.03	6.58	1.40	27.08	0.00	0.28	0.28	26.80	1.01	0.01	1.00	0.60
30	18.53	0.56	0.03	6.58	1.44	27.14	0.00	0.28	0.28	26.86	0.91	0.01	0.90	0.53
TOTAL	404.10	9.66	0.73	146.15	27.76	588.40	125.67	7.52	133.19	455.21	96.07	95.66	0.42	-14.79

* Costs increased by 375%

NET PRESENT WORTH = Rs. 0.41894 million

B/C RATIO = 1.00 : 1

IRR = 12.06 %

731

TABLE 9.56.1

SENSITIVITY ANALYSIS OF UPPER SWAT SYSTEM
ALT I *

(Rs.Million)

YEARS	BENEFITS: Increase in Agri. Prod.	Savings in off-Road Hauling Exp.	Canal O&M Savings	Vehicle Operating Cost (VOC) Savings	Time Savings	Total Benefits	COSTS: Capital Cost	O & M Cost	Total Cost	CASH FLOW	PRESENT WORTH: Benefits @ 12%	Costs @ 12%	CASH FLOW 26%	CASH FLOW 28%
0	0.00	0.00	0.00	0.00	0.00	0.00	0.00	0.00	0.00	0.00	0.00	0.00	0.00	0.00
1	0.00	0.00	0.00	0.00	0.00	0.00	25.89	0.00	25.89	-25.89	0.00	23.12	-20.55	-20.23
2	0.39	0.22	0.02	1.18	0.18	1.98	22.97	0.12	23.09	-21.11	1.58	18.41	-13.30	-12.89
3	1.83	0.52	0.05	2.86	0.44	5.70	17.95	0.29	18.23	-12.53	4.06	12.98	-6.26	-5.98
4	4.70	0.94	0.08	5.11	0.77	11.60	17.80	0.50	18.30	-6.69	7.37	11.63	-2.66	-2.49
5	8.88	1.40	0.12	7.53	1.13	19.06	12.05	0.70	12.75	6.31	10.82	7.23	1.99	1.84
6	13.06	1.74	0.14	9.22	1.36	25.54	0.00	0.83	0.83	24.71	12.94	0.42	6.18	5.62
7	15.71	1.81	0.14	9.60	1.40	28.65	0.00	0.83	0.83	27.82	12.96	0.37	5.52	4.94
8	18.33	1.88	0.14	10.00	1.44	31.79	0.00	0.83	0.83	30.96	12.84	0.33	4.87	4.30
9	20.96	1.95	0.14	10.41	1.48	34.94	0.00	0.83	0.83	34.11	12.60	0.30	4.26	3.70
10	23.61	2.02	0.14	10.84	1.52	38.13	0.00	0.83	0.83	37.31	12.28	0.27	3.70	3.16
11	26.24	2.09	0.14	11.29	1.57	41.34	0.00	0.83	0.83	40.51	11.88	0.24	3.19	2.68
12	28.89	2.16	0.14	11.77	1.60	44.56	0.00	0.83	0.83	43.74	11.44	0.21	2.73	2.26
13	31.55	2.24	0.14	12.26	1.65	47.83	0.00	0.83	0.83	47.00	10.96	0.19	2.33	1.90
14	34.19	2.31	0.14	12.78	1.70	51.12	0.00	0.83	0.83	50.29	10.46	0.17	1.98	1.59
15	36.86	2.38	0.14	13.32	1.75	54.44	0.00	0.83	0.83	53.61	9.95	0.15	1.67	1.32
16	39.51	2.45	0.14	13.89	1.79	57.78	0.00	0.83	0.83	56.95	9.42	0.13	1.41	1.10
17	42.17	2.52	0.14	14.48	1.85	61.16	0.00	0.83	0.83	60.34	8.91	0.12	1.19	0.91
18	44.85	2.59	0.14	15.10	1.90	64.58	0.00	0.83	0.83	63.76	8.40	0.11	1.00	0.75
19	47.52	2.66	0.14	15.75	1.94	68.02	0.00	0.83	0.83	67.20	7.90	0.10	0.83	0.62
20	50.19	2.74	0.14	16.43	2.01	71.51	0.00	0.83	0.83	70.69	7.41	0.09	0.69	0.51
21	50.19	2.71	0.14	16.43	2.06	71.54	0.00	0.83	0.83	70.71	6.62	0.08	0.55	0.40
22	50.19	2.68	0.14	16.43	2.12	71.57	0.00	0.83	0.83	70.74	5.91	0.07	0.44	0.31
23	50.19	2.66	0.14	16.43	2.18	71.60	0.00	0.83	0.83	70.78	5.28	0.06	0.35	0.24
24	50.19	2.63	0.14	16.43	2.23	71.63	0.00	0.83	0.83	70.81	4.72	0.05	0.28	0.19
25	50.19	2.60	0.14	16.43	2.30	71.67	0.00	0.83	0.83	70.84	4.22	0.05	0.22	0.15
26	50.19	2.62	0.14	16.43	2.37	71.76	0.00	0.83	0.83	70.93	3.77	0.04	0.17	0.12
27	50.19	2.65	0.14	16.43	2.43	71.85	0.00	0.83	0.83	71.02	3.37	0.04	0.14	0.09
28	50.19	2.68	0.14	16.43	2.50	71.95	0.00	0.83	0.83	71.13	3.01	0.03	0.11	0.07
29	50.19	2.71	0.14	16.43	2.57	72.05	0.00	0.83	0.83	71.22	2.69	0.03	0.09	0.06
30	50.19	2.75	0.14	16.43	2.64	72.15	0.00	0.83	0.83	71.32	2.41	0.03	0.07	0.04
TOTAL	991.38	63.33	3.76	368.17	50.84	1477.48	96.65	22.23	118.89	1358.59	226.18	77.04	3.19	-2.74

* Benefits decreased by 10%

NET PRESENT WORTH = Rs. 149.137 million

B/C RATIO = 2.94 : 1

IRR = 27.08 %

732

TABLE 9.56.2

SENSITIVITY ANALYSIS OF UPPER SWAT SYSTEM
ALT II *

(Rs.Million)

YEARS	BENEFITS: Increase in Agri. Prod.	Savings in off-Road Hauling Exp.	Canal O&M Savings	Vehicle Operating Cost (VOC) Savings	Time Savings	Total Benefits	COSTS: Capital Cost	O & M Cost	Total Cost	CASH FLOW	PRESENT WORTH: Benefits @ 12%	Costs @ 12%	CASH FLOW 26%	CASH FLOW 28%
0	0.00	0.00	0.00	0.00	0.00	0.00	0.00	0.00	0.00	0.00	0.00	0.00	0.00	0.00
1	0.00	0.00	0.00	0.00	0.00	0.00	28.48	0.00	28.48	-28.48	0.00	25.43	-22.60	-22.25
2	0.43	0.24	0.02	1.31	0.20	2.20	25.27	0.12	25.39	-23.19	1.76	20.24	-14.61	-14.15
3	2.03	0.58	0.05	3.18	0.49	6.34	19.74	0.29	20.03	-13.69	4.51	14.26	-6.84	-6.53
4	5.22	1.04	0.09	5.67	0.86	12.89	19.58	0.50	20.08	-7.18	8.19	12.76	-2.85	-2.68
5	9.87	1.56	0.13	8.37	1.25	21.18	13.25	0.70	13.95	7.22	12.02	7.92	2.27	2.10
6	14.53	1.93	0.16	10.25	1.51	28.37	0.00	0.83	0.83	27.55	14.38	0.42	6.88	6.26
7	17.45	2.01	0.16	10.67	1.55	31.83	0.00	0.83	0.83	31.01	14.40	0.37	6.15	5.51
8	20.37	2.09	0.16	11.11	1.60	35.32	0.00	0.83	0.83	34.50	14.27	0.33	5.43	4.79
9	23.29	2.17	0.16	11.57	1.64	38.82	0.00	0.83	0.83	37.99	14.00	0.30	4.75	4.12
10	26.23	2.25	0.16	12.05	1.69	42.37	0.00	0.83	0.83	41.54	13.64	0.27	4.12	3.52
11	29.16	2.33	0.16	12.55	1.74	45.93	0.00	0.83	0.83	45.10	13.20	0.24	3.55	2.98
12	32.10	2.41	0.16	13.07	1.78	49.51	0.00	0.83	0.83	48.69	12.71	0.21	3.04	2.52
13	35.05	2.48	0.16	13.62	1.83	53.14	0.00	0.83	0.83	52.32	12.18	0.19	2.59	2.11
14	37.99	2.56	0.16	14.20	1.89	56.80	0.00	0.83	0.83	55.97	11.62	0.17	2.20	1.77
15	40.95	2.64	0.16	14.80	1.94	60.49	0.00	0.83	0.83	59.66	11.05	0.15	1.86	1.47
16	43.90	2.72	0.16	15.43	1.99	64.20	0.00	0.83	0.83	63.37	10.47	0.13	1.57	1.22
17	46.86	2.80	0.16	16.09	2.05	67.96	0.00	0.83	0.83	67.13	9.90	0.12	1.32	1.01
18	49.83	2.88	0.16	16.78	2.11	71.76	0.00	0.83	0.83	70.93	9.33	0.11	1.11	0.83
19	52.80	2.96	0.16	17.50	2.16	75.58	0.00	0.83	0.83	74.76	8.78	0.10	0.93	0.69
20	55.77	3.04	0.16	18.26	2.23	79.46	0.00	0.83	0.83	78.63	8.24	0.09	0.77	0.56
21	55.77	3.01	0.16	18.26	2.29	79.49	0.00	0.83	0.83	78.66	7.36	0.08	0.61	0.44
22	55.77	2.98	0.16	18.26	2.35	79.52	0.00	0.83	0.83	78.69	6.57	0.07	0.49	0.34
23	55.77	2.95	0.16	18.26	2.42	79.56	0.00	0.83	0.83	78.74	5.87	0.06	0.39	0.27
24	55.77	2.92	0.16	18.26	2.48	79.59	0.00	0.83	0.83	78.76	5.24	0.05	0.31	0.21
25	55.77	2.89	0.16	18.26	2.55	79.63	0.00	0.83	0.83	78.80	4.68	0.05	0.24	0.16
26	55.77	2.91	0.16	18.26	2.63	79.73	0.00	0.83	0.83	78.90	4.19	0.04	0.19	0.13
27	55.77	2.95	0.16	18.26	2.70	79.83	0.00	0.83	0.83	79.01	3.74	0.04	0.15	0.10
28	55.77	2.98	0.16	18.26	2.78	79.95	0.00	0.83	0.83	79.12	3.35	0.03	0.12	0.08
29	55.77	3.01	0.16	18.26	2.85	80.05	0.00	0.83	0.83	79.23	2.99	0.03	0.10	0.06
30	55.77	3.05	0.16	18.26	2.93	80.17	0.00	0.83	0.83	79.34	2.68	0.03	0.08	0.05
TOTAL	1101.53	70.37	4.18	409.08	56.49	1641.64	106.32	22.23	128.55	1513.09	251.31	84.27	4.33	-2.29

* Costs increased by 10%

NET PRESENT WORTH = Rs. 167.033 million

B/C RATIO = 2.98 : 1

IRR = 27.31 %

733

TABLE 9.56.3

SENSITIVITY ANALYSIS OF UPPER SWAT SYSTEM
ALT III *

(Rs.Million)

YEARS	BENEFITS: Increase in Agri. Prod.	BENEFITS: Savings in off-Road Hauling Exp.	BENEFITS: Canal O&M Savings	BENEFITS: Vehicle Operating Cost(VOC) Savings	BENEFITS: Time Savings	BENEFITS: Total Benefits	COSTS: Capital Cost	COSTS: O & M Cost	COSTS: Total Cost	CASH FLOW	PRESENT WORTH: Benefits @ 12%	PRESENT WORTH: Costs @ 12%	PRESENT WORTH: CASH FLOW 24%	PRESENT WORTH: CASH FLOW 26%
0	0.00	0.00	0.00	0.00	0.00	0.00	0.00	0.00	0.00	0.00	0.00	0.00	0.00	0.00
1	0.00	0.00	0.00	0.00	0.00	0.00	28.48	0.00	28.48	-28.48	0.00	25.43	-22.97	-22.60
2	0.39	0.22	0.02	1.18	0.18	1.98	25.27	0.12	25.39	-23.41	1.58	20.24	-15.22	-14.74
3	1.83	0.52	0.05	2.86	0.44	5.70	19.74	0.29	20.03	-14.33	4.06	14.26	-7.51	-7.16
4	4.70	0.94	0.08	5.11	0.77	11.60	19.58	0.50	20.08	-8.47	7.37	12.76	-3.58	-3.36
5	8.88	1.40	0.12	7.53	1.13	19.06	13.25	0.70	13.95	5.11	10.82	7.92	1.74	1.61
6	13.08	1.74	0.14	9.22	1.36	25.54	0.00	0.83	0.83	24.71	12.94	0.42	6.80	6.18
7	15.71	1.81	0.14	9.60	1.40	28.65	0.00	0.83	0.83	27.82	12.96	0.37	6.17	5.52
8	18.33	1.88	0.14	10.00	1.44	31.79	0.00	0.83	0.83	30.96	12.84	0.33	5.54	4.87
9	20.96	1.95	0.14	10.41	1.48	34.94	0.00	0.83	0.83	34.11	12.60	0.30	4.92	4.26
10	23.61	2.02	0.14	10.84	1.52	38.13	0.00	0.83	0.83	37.31	12.28	0.27	4.34	3.70
11	26.24	2.09	0.14	11.29	1.57	41.34	0.00	0.83	0.83	40.51	11.88	0.24	3.80	3.19
12	28.89	2.16	0.14	11.77	1.60	44.56	0.00	0.83	0.83	43.74	11.44	0.21	3.31	2.73
13	31.55	2.24	0.14	12.26	1.65	47.83	0.00	0.83	0.83	47.00	10.96	0.19	2.87	2.33
14	34.19	2.31	0.14	12.78	1.70	51.12	0.00	0.83	0.83	50.29	10.46	0.17	2.48	1.98
15	36.86	2.38	0.14	13.32	1.75	54.44	0.00	0.83	0.83	53.61	9.95	0.15	2.13	1.67
16	39.51	2.45	0.14	13.89	1.79	57.78	0.00	0.83	0.83	56.95	9.42	0.13	1.82	1.41
17	42.17	2.52	0.14	14.48	1.85	61.16	0.00	0.83	0.83	60.34	8.91	0.12	1.56	1.19
18	44.85	2.59	0.14	15.10	1.90	64.58	0.00	0.83	0.83	63.76	8.40	0.11	1.33	1.00
19	47.52	2.66	0.14	15.75	1.94	68.02	0.00	0.83	0.83	67.20	7.90	0.10	1.13	0.83
20	50.19	2.74	0.14	16.43	2.01	71.51	0.00	0.83	0.83	70.69	7.41	0.09	0.96	0.69
21	50.19	2.71	0.14	16.43	2.06	71.54	0.00	0.83	0.83	70.71	6.62	0.08	0.77	0.55
22	50.19	2.68	0.14	16.43	2.12	71.57	0.00	0.83	0.83	70.74	5.91	0.07	0.62	0.44
23	50.19	2.66	0.14	16.43	2.18	71.60	0.00	0.83	0.83	70.78	5.28	0.06	0.50	0.35
24	50.19	2.63	0.14	16.43	2.23	71.63	0.00	0.83	0.83	70.81	4.72	0.05	0.41	0.28
25	50.19	2.60	0.14	16.43	2.30	71.67	0.00	0.83	0.83	70.84	4.22	0.05	0.33	0.22
26	50.19	2.62	0.14	16.43	2.37	71.76	0.00	0.83	0.83	70.93	3.77	0.04	0.26	0.17
27	50.19	2.65	0.14	16.43	2.43	71.85	0.00	0.83	0.83	71.02	3.37	0.04	0.21	0.14
28	50.19	2.68	0.14	16.43	2.50	71.95	0.00	0.83	0.83	71.13	3.01	0.03	0.17	0.11
29	50.19	2.71	0.14	16.43	2.57	72.05	0.00	0.83	0.83	71.22	2.69	0.03	0.14	0.09
30	50.19	2.75	0.14	16.43	2.64	72.15	0.00	0.83	0.83	71.32	2.41	0.03	0.11	0.07
TAL	991.38	63.33	3.76	368.17	50.84	1477.48	106.32	22.23	128.55	1348.93	226.18	84.27	5.13	-2.30

* Benefits decreased & Cost increased by 10%

NET PRESENT WORTH = Rs. 141.902 million

B/C RATIO = 2.68 : 1

IRR = 25.38 %

734

TABLE 9.56.4

SENSITIVITY ANALYSIS OF UPPER SWAT SYSTEM
ALT IV *

(Rs.Million)

YEARS	BENEFITS: Increase in Agri. Prod.	BENEFITS: Savings in off-Road Hauling Exp.	BENEFITS: Canal O&M Savings	BENEFITS: Vehicle Operating Cost(VOC) Savings	BENEFITS: Time Savings	BENEFITS: Total Benefits	COSTS: Capital Cost	COSTS: O & M Cost	COSTS: Total Cost	CASH FLOW	PRESENT WORTH: Benefits @ 12%	PRESENT WORTH: Costs @ 12%	PRESENT WORTH: CASH FLOW 12%	PRESENT WORTH: CASH FLOW 14%
0	0.00	0.00	0.00	0.00	0.00	0.00	0.00	0.00	0.00	0.00	0.00	0.00	0.00	0.00
1	0.00	0.00	0.00	0.00	0.00	0.00	25.89	0.00	25.89	-25.89	0.00	23.12	-23.12	-22.71
2	0.13	0.07	0.01	0.41	0.06	0.68	22.97	0.12	23.09	-22.41	0.54	18.41	-17.87	-17.24
3	0.63	0.18	0.02	0.99	0.15	1.96	17.95	0.29	18.23	-16.27	1.40	12.98	-11.58	-10.98
4	1.62	0.32	0.03	1.76	0.27	4.00	17.80	0.50	18.30	-14.30	2.54	11.63	-9.09	-8.47
5	3.06	0.48	0.04	2.59	0.39	6.57	12.05	0.70	12.75	-6.18	3.73	7.23	-3.51	-3.21
6	4.50	0.60	0.05	3.18	0.47	8.80	0.00	0.83	0.83	7.97	4.46	0.42	4.04	3.63
7	5.41	0.62	0.05	3.31	0.48	9.87	0.00	0.83	0.83	9.04	4.46	0.37	4.09	3.61
8	6.31	0.65	0.05	3.44	0.50	10.95	0.00	0.83	0.83	10.12	4.42	0.33	4.09	3.55
9	7.22	0.67	0.05	3.59	0.51	12.03	0.00	0.83	0.83	11.21	4.34	0.30	4.04	3.45
10	8.13	0.70	0.05	3.73	0.52	13.13	0.00	0.83	0.83	12.31	4.23	0.27	3.96	3.32
11	9.04	0.72	0.05	3.89	0.54	14.24	0.00	0.83	0.83	13.41	4.09	0.24	3.86	3.17
12	9.95	0.75	0.05	4.05	0.55	15.35	0.00	0.83	0.83	14.52	3.94	0.21	3.73	3.01
13	10.87	0.77	0.05	4.22	0.57	16.47	0.00	0.83	0.83	15.65	3.78	0.19	3.59	2.85
14	11.78	0.79	0.05	4.40	0.59	17.61	0.00	0.83	0.83	16.78	3.60	0.17	3.43	2.68
15	12.69	0.82	0.05	4.59	0.60	18.75	0.00	0.83	0.83	17.93	3.43	0.15	3.28	2.51
16	13.61	0.84	0.05	4.78	0.62	19.90	0.00	0.83	0.83	19.08	3.25	0.13	3.11	2.34
17	14.53	0.87	0.05	4.99	0.64	21.07	0.00	0.83	0.83	20.24	3.07	0.12	2.95	2.18
18	15.45	0.89	0.05	5.20	0.65	22.24	0.00	0.83	0.83	21.42	2.89	0.11	2.79	2.03
19	16.37	0.92	0.05	5.43	0.67	23.43	0.00	0.83	0.83	22.60	2.72	0.10	2.62	1.88
20	17.29	0.94	0.05	5.66	0.69	24.63	0.00	0.83	0.83	23.81	2.55	0.09	2.47	1.73
21	17.29	0.93	0.05	5.66	0.71	24.64	0.00	0.83	0.83	23.82	2.28	0.08	2.20	1.52
22	17.29	0.92	0.05	5.66	0.73	24.65	0.00	0.83	0.83	23.83	2.04	0.07	1.97	1.33
23	17.29	0.92	0.05	5.66	0.75	24.66	0.00	0.83	0.83	23.84	1.82	0.06	1.76	1.17
24	17.29	0.91	0.05	5.66	0.77	24.67	0.00	0.83	0.83	23.85	1.63	0.05	1.57	1.03
25	17.29	0.90	0.05	5.66	0.79	24.68	0.00	0.83	0.83	23.86	1.45	0.05	1.40	0.90
26	17.29	0.90	0.05	5.66	0.82	24.72	0.00	0.83	0.83	23.89	1.30	0.04	1.25	0.79
27	17.29	0.91	0.05	5.66	0.84	24.75	0.00	0.83	0.83	23.92	1.16	0.04	1.12	0.70
28	17.29	0.92	0.05	5.66	0.86	24.78	0.00	0.83	0.83	23.96	1.04	0.03	1.00	0.61
29	17.29	0.93	0.05	5.66	0.88	24.82	0.00	0.83	0.83	23.99	0.93	0.03	0.90	0.54
30	17.29	0.95	0.05	5.66	0.91	24.85	0.00	0.83	0.83	24.03	0.83	0.03	0.80	0.47
TOTAL	341.47	21.81	1.29	126.82	17.51	508.91	96.65	22.23	118.89	390.02	77.91	77.04	0.87	-11.60

* Benefits decreased by 69%

NET PRESENT WORTH = Rs. 0.86689 million

B/C RATIO = 1.01 : 1

IRR = 12.14 %

735

TABLE 9.56.5

SENSITIVITY ANALYSIS OF UPPER SWAT SYSTEM
ALT V *

(Rs.Million)

YEARS	BENEFITS: Increase in Agri. Prod.	BENEFITS: Savings in off-Road Hauling Exp.	BENEFITS: Canal O&M Savings	BENEFITS: Vehicle Operating Cost(VOC) Savings	BENEFITS: Time Savings	BENEFITS: Total Benefits	COSTS: Capital Cost	COSTS: O & M Cost	COSTS: Total Cost	CASH FLOW	PRESENT WORTH: Benefits @ 12%	PRESENT WORTH: Costs @ 12%	PRESENT WORTH: CASH FLOW 12%	PRESENT WORTH: CASH FLOW 14%
0	0.00	0.00	0.00	0.00	0.00	0.00	0.00	0.00	0.00	0.00	0.00	0.00	0.00	0.00
1	0.00	0.00	0.00	0.00	0.00	0.00	88.03	0.00	88.03	-88.03	0.00	78.59	-78.59	-77.22
2	0.43	0.24	0.02	1.31	0.20	2.20	78.10	0.12	78.22	-76.02	1.76	62.36	-60.60	-58.49
3	2.03	0.58	0.05	3.18	0.49	6.34	61.01	0.29	61.30	-54.97	4.51	43.63	-39.12	-37.10
4	5.22	1.04	0.09	5.67	0.86	12.89	60.52	0.50	61.02	-48.12	8.19	38.78	-30.58	-28.49
5	9.87	1.56	0.13	8.37	1.25	21.18	40.97	0.70	41.67	-20.49	12.02	23.64	-11.63	-10.64
6	14.53	1.93	0.16	10.25	1.51	28.37	0.00	0.83	0.83	27.55	14.38	0.42	13.96	12.55
7	17.45	2.01	0.16	10.67	1.55	31.83	0.00	0.83	0.83	31.01	14.40	0.37	14.03	12.39
8	20.37	2.09	0.16	11.11	1.60	35.32	0.00	0.83	0.83	34.50	14.27	0.33	13.93	12.09
9	23.29	2.17	0.16	11.57	1.64	38.82	0.00	0.83	0.83	37.99	14.00	0.30	13.70	11.68
10	26.23	2.25	0.16	12.05	1.69	42.37	0.00	0.83	0.83	41.54	13.64	0.27	13.38	11.21
11	29.16	2.33	0.16	12.55	1.74	45.93	0.00	0.83	0.83	45.10	13.20	0.24	12.97	10.67
12	32.10	2.41	0.16	13.07	1.78	49.51	0.00	0.83	0.83	48.69	12.71	0.21	12.50	10.11
13	35.05	2.48	0.16	13.62	1.83	53.14	0.00	0.83	0.83	52.32	12.18	0.19	11.99	9.53
14	37.99	2.56	0.16	14.20	1.89	56.80	0.00	0.83	0.83	55.97	11.62	0.17	11.45	8.94
15	40.95	2.64	0.16	14.80	1.94	60.49	0.00	0.83	0.83	59.66	11.05	0.15	10.90	8.36
16	43.90	2.72	0.16	15.43	1.99	64.20	0.00	0.83	0.83	63.37	10.47	0.13	10.34	7.79
17	46.86	2.80	0.16	16.09	2.05	67.96	0.00	0.83	0.83	67.13	9.90	0.12	9.78	7.24
18	49.83	2.88	0.16	16.78	2.11	71.76	0.00	0.83	0.83	70.93	9.33	0.11	9.22	6.71
19	52.80	2.96	0.16	17.50	2.16	75.58	0.00	0.83	0.83	74.76	8.78	0.10	8.68	6.20
20	55.77	3.04	0.16	18.26	2.23	79.46	0.00	0.83	0.83	78.63	8.24	0.09	8.15	5.72
21	55.77	3.01	0.16	18.26	2.29	79.49	0.00	0.83	0.83	78.66	7.36	0.08	7.28	5.02
22	55.77	2.98	0.16	18.26	2.35	79.52	0.00	0.83	0.83	78.69	6.57	0.07	6.50	4.41
23	55.77	2.95	0.16	18.26	2.42	79.56	0.00	0.83	0.83	78.74	5.87	0.06	5.81	3.87
24	55.77	2.92	0.16	18.26	2.48	79.59	0.00	0.83	0.83	78.76	5.24	0.05	5.19	3.39
25	55.77	2.89	0.16	18.26	2.55	79.63	0.00	0.83	0.83	78.80	4.68	0.05	4.64	2.98
26	55.77	2.91	0.16	18.26	2.63	79.73	0.00	0.83	0.83	78.90	4.19	0.04	4.14	2.62
27	55.77	2.95	0.16	18.26	2.70	79.83	0.00	0.83	0.83	79.01	3.74	0.04	3.70	2.30
28	55.77	2.98	0.16	18.26	2.78	79.95	0.00	0.83	0.83	79.12	3.35	0.03	3.31	2.02
29	55.77	3.01	0.16	18.26	2.85	80.05	0.00	0.83	0.83	79.23	2.99	0.03	2.96	1.77
30	55.77	3.05	0.16	18.26	2.93	80.17	0.00	0.83	0.83	79.34	2.68	0.03	2.65	1.56
OTAL	1101.53	70.37	4.18	409.08	56.49	1641.64	328.62	22.23	350.86	1290.79	251.31	250.68	0.63	-40.84

* Costs increased by 240%

NET PRESENT WORTH = Rs. 0.62927 million

B/C RATIO = 1.00 : 1

IRR = 12.03 %

736

TABLE 9.57

SUMMARY OF SENSITIVITY ANALYSIS FOR INDIVIDUAL SYSTEMS

(Impact on IRR)

SYSTEMS	ORIGINAL IRR %	BENEFITS DECREASED by 10%	CAPITAL COSTS INCREASED by 10%	BOTH BENEFITS -10% & CAPITAL COSTS +10 %	MAXIMUM FOR IRR > 12% BENEFITS DECREASE %	MAXIMUM FOR IRR > 12% CAPITAL COSTS INCREASE %
JHANG	26.09	24.20	24.48	22.70	60	50
GOGERA	33.05	30.74	31.03	28.87	74	300
DEPALPUR	17.40	15.93	16.15	14.86	34	55
MAILSI	17.75	16.32	16.54	15.20	35	55
NASIR	20.05	18.52	18.71	17.27	45	90
JAMRAO & MITHRAO	11.74	12.91 (a)	12.83 (a)	14.05 (a)	+ 2.75 (b)	- 3.85 (b)
GOTKI	14.64	13.40	13.51	12.39	25	90
ROHRI	13.04	11.78	11.86	10.89	8	9
DADU	10.75	11.80 (a)	11.70 (a)	13.01 (a)	+ 12.30(b)	- 13 (b)
KABUL	22.69	21.02	21.23	19.62	55	130
PAHARPUR	19.32	17.70	17.90	16.43	41	78
MARWAT	37.87	35.22	35.51	33.00	77.5	375
UPPER SWAT	29.12	27.08	27.31	25.38	69	240

(a) Benefits are increased and Capital Costs decreased, rather than the reverse

(b) Minimum rather than maximum change that will produce IRR > 12%

Source : Appendix Tables No. 9.29, 9.44, to 9.56

737