PN. ABU-468
93919

PRIVATE POWER LAWS AND REGULATIONS ON RENEWABLE ENERGY TECHNOLOGIES

Prepared for:

The Indian Minister for Non-Conventional Energy Resources (MNES)

Prepared by:

The Private Sector Energy Development (PSED) Program Under The India Private Power Initiative (IPPI) of the United States Agency for International Development (USAID)

Volume I of IV

January, 1995

PRIVATE SECTOR ENERGY DEVELOPMENT PROGRAM

2001 L Street, N.W. • Suite 500 • Washington, DC 20036 • Tel: (202) 728-0390 • Fax: (202) 872-9174

K & M ENGINEERING AND CONSULTING CORPORATION, PRIME CONTRACTOR

January 13, 1995

U.S. Agency for International Development
Attention: Mr. David Hess
American Embassy
Shanti Path, Chanakyapuri 110021
New Delhi, India

SUBJECT: Private Power Laws and Regulations on Renewable Energy Technologies

Dear Mr. Hess:

In response to the request by the Indian Minister for Non-Conventional Energy Resources (MNES), we are pleased to submit the four attached volumes on Private Power Laws and Regulations on Renewable Energy Technologies.

As indicated in the letter by Mr. Roger Wagner, also attached, the principal coordinator for this task, we have not prepared original material, but have assembled materials available from other sources, giving credit to the source.

The four volumes include materials on various countries as follows:

- **Volume I:** Argentina, Australia, Costa Rica, Dominican Republic, Indonesia, Italy, and Mexico
- **Volume II:** Peru, the Philippines, Spain, Thailand, Turkey, and the United Kingdom
- **Volume III:** U.S. federal energy regulations
- **Volume IV:** U.S. state energy regulations

We hope you will find the information presented in these four volumes useful and responsive to your needs.

Sincerely,

John Paul Kuspa
Director

Attachments: a/s

Copy:
USAID (G/ENV/EET): Sam Schweitzer, Alberto Sabadell, David Jhirad, Ross Pumfrey

A Partnership Including
Professional Corporations
1850 K Street, N.W.
Washington, DC 20006-2296
202-887-8000
Facsimile 202-778-8087

Boston
Chicago
Los Angeles
Miami
Newport Beach
New York
Tallinn (Estonia)
Vilnius (Lithuania)
Washington, D.C.

Associated (Independent) Offices
London
Paris

MCDERMOTT, WILL & EMERY

Including the practice formerly carried on by Lee, Toomey & Kent

January 4, 1995

Mr. Ajit K. Gupta
Director (Power)
Ministry of Non-Conventional
Energy Sources
Government of India
Block No. 14, C.G.O. Complex
Lodhi Road, New Delhi-110 003

Re: Private Power Laws, Regulations and Related Materials

Dear Mr. Gupta:

Enclosed on behalf of the U.S. Agency for International Development's India Private Power Initiative/K&M Engineering and Consulting Corporation and myself, are the reference materials on private power legislation in other countries which David Hess at the U.S. AID Mission has asked us to provide to you.

Volumes I and II include materials pertaining to countries with private power laws in place, other than the U.S. In addition, there are three spiral bound volumes, two of which are bound copies of addresses by officials of the Indonesian power sector, and one of which is an address by an official of the Philippines energy sector.

Volume III contains materials pertaining to U.S. federal energy regulation, principally by the Federal Energy Regulatory Commission, including the text of relevant provisions of the Public Utility Regulatory Policies Act of 1978 (PURPA) and of the Energy Policy Act of 1992, and related materials.

Volume IV contains pertaining to regulation of renewable energy by U.S. states, including excerpted summary materials prepared for the National Association of Regulatory Utility Commissioners (NARUC). As you know, NARUC's members are the public utility commissioners of the various U.S. states.

BEST AVAILABLE DOCUMENT

Most state laws relating specifically to renewable energy implement the federal law, PURPA, and therefore their methodologies for pricing are derived from the PURPA avoided cost standard. I presume from our discussions that you wish to consider a simplified pricing structure, rather than engaging in elaborate avoided cost exercises. These and other state regulatory approaches are summarized in the text summaries in Volume IV.

As you know, states have also implemented PURPA through offers of blocs of capacity, in some cases accompanied by standard contracts. An example of a California standard contract for a wind power project is included. Some states have also provided incentive rates for renewables. These are summarized in the text summaries in Volume IV, and in some articles also included in that Volume.

Finally, several states are considered overall reform of state electric regulation. An example which is included is the order implementing California's proposed deregulation of its electric sector.

If there is other information which comes to our attention, and which would be useful, we will forward it to you under separate cover. Otherwise, please let us know if there are specific needs you may have and we will seek to obtain it for you, budget and time permitting.

An important note: As instructed by the U.S. AID Mission, we have not prepared original material, but have rather assembled materials already available from other sources, giving credit to the source. In particular, in compiling the laws in Volumes I and II, we referred to the 1992 Compendium of Laws and Regulations Related to Private Sector Participation in the Power Sector, prepared for the Private Sector Energy Development Program of U.S. AID by RCG/Hagler Bailly. We also note that two chapter excerpts from Investing in the Future: A Regulator's Guide to Renewables, by Jan Hamrin and Nancy Rader, are included in the state materials.

We have not included the copy of the book issued by the U.S. Export Council on Renewable Energy which I showed you during our meeting, Country Profiles: Renewable Energy and Energy Efficiency in Latin America and the Caribbean. The copy I was furnished was a pre-publication copy. I had been told that the final copy would be available within the next week but thus far, have not received it. I presume you may receive a copy of this from other sources.

BEST AVAILABLE DOCUMENT

Please do not hesitate to phone or fax me at 202/778-8194 (phone) or 202/778-8050 (fax) in response to these materials, or in preparation for our meetings. I found our meeting very informative and am continuing to formulate my thoughts on what might be useful to you in your efforts. I look forward to meeting with you toward the end of January. David Hess, K&M Engineering and/or I will consult with you as itineraries and schedules are firmed up.

Sincerely,

Roger B. Wagner

Enclosures
cc: David Hess, U.S. AID (w/o enclosures)
Ronald Somers, U.S. AID " "
John Kuspa, K&M Engineering

BEST AVAILABLE DOCUMENT

DISCLAIMER

The completion of this compendium was funded by the United States Agency for International Development (USAID), under the Private Sector Energy Development (PSED) Program, in support of the India Private Power Initiatives (IPPI). The views, statements, and opinions contained in these volumes are the originators' alone and are not intended as USAID recommendations, conclusions, or statements of USAID policy.

BEST AVAILABLE DOCUMENT

VOLUME I

	TAB
Argentina: Decree No. 634	1
Australia – State of Victoria: State Electricity Commission of Victoria: Independent Generation Policy	2
Costa Rica:	3
• Law No. 7200 Authorizing Autonomous or Parallel Electricity Production	
• Decree No. 20346 - MIRENEM (Regulations)	
Dominican Republic: Law No. 14-90	4
Indonesia:	5
• Newspaper/Magazine Articles	
• USAID Report Number 92-07 Regarding Electricity Pricing Incentives	
• Speech Prepared by R.M. Sayid Budihartjo, "Issues Relating to Private Investment in the Power Sector Indonesian Utility Experience"	
• Speech Prepared by Moeljadi Oetji, "The Role of Private Power for Future Power Supply in Indonesia"	
Italy:	6
• Law 9 January 1991 No. 9 (Excerpts)	
• Law 9 January 1991 No. 10 (Excerpts)	
Mexico:	7
• Electrical Energy Public Service Law	
• Regulations of the Electric Power Public Service Law	

BEST AVAILABLE DOCUMENT

VOLUME II

	TAB
Peru:	8
• Law on Electrical Concessions – Executive Order No. 25844	
• Law Regulations for Electrical Franchises	
Philippines:	9
• Rules and Regulations to Implement Executive Order 215 on Private Sector Participation in Power Generation as Proposed by USAID (Not Adopted)	
• Rules and Regulations Implementing Executive Order No. 215 on Private Sector Participation in Power Generation (As Adopted)	
• Build, Operate and Transfer ("BOT") Law	
• Speech Presented by Mario Baile of National Power Corporation Regarding Philippine Private Power Program	
• Speech Presented by Flordeliza M. Andres, Acting Assistant Secretary for Policy and Programs, Philippine Department of Energy	
Spain:	10
• Law 82/1980 of December 30 Regarding Energy Conservation (Excerpts)	
• Royal Decree 872/1982 of March 5 Regarding Proceedings to Apply for Benefits Granted by Law 82/1980 of December 30 Regarding Energy Conservation (Excerpts)	
• Royal Decree 907/1982 of April 2 Regarding Development of Electric Energy Self-Generation	
• Order of 7 July 1982 by Which the Technical and Economic Relationships Between Self-Generation and Electrical Companies or Entities Are Regulated	
• Order of April 8, 1983 to Establish Rules for Existing Self-Generation Facilities to Obtain Status as an Electrical Energy Self-Generator According to the Provisions Set Forth in Royal Decree 907/1982 of April 2 Regarding the Development of Electrical Energy Self-Generation	

BEST AVAILABLE DOCUMENT

VOLUME II (Cont.)

	TAB
Thailand:	**11**
• Article Regarding Independent Power Producer Bids	
• Memorandum Regarding the Electricity Generating Authority of Thailand's Independent Power Producers Plan	
• Materials from Presentation Regarding Natural Gas in Thailand (August 23, 1994)	
• Electricity Generating Authority of Thailand Summary of Independent Power Producer Policies (August 1994)	
• Materials Regarding Independent Power Producer Seminar (August 17, 1994)	
• USAID Draft of Proposed Modifications to Regulations on the Purchase of Electricity from Independent Power Producers (Not Adopted) and Model Power Purchase Agreement	
Turkey:	**12**
• Regulation on Determining the Principles for Granting Permission to Institutions Other Than the Turkish Electricity Authority for the Construction and Operation of Electric Power Plants	
United Kingdom:	**13**
• Electricity Act 1989 – Chapter 29	
• Draft Electricity Generation License	

BEST AVAILABLE DOCUMENT

VOLUME III

United States - Federal:

Public Utility Regulatory Policies Act	1
Final Regulations Regarding Small Power Production and Cogeneration	2
Rulemakings on Cogeneration and Small Power Production (see table of contents therein)	3
Energy Policy Act of 1992 – Title I (Energy Efficiency), Subtitle B (Utilities)	4
Energy Policy Act of 1992 – Title VII (Electricity), Subtitle A (Exempt Wholesale Generators)	5
Energy Policy Act of 1992 – Title XII (Renewable Energy)	6
Energy Policy Act of 1992 – Joint Explanatory Statement of the Committee of Conference	7
Report on the Study of the Tax and Rate Treatment of Renewable Energy Projects Issued Pursuant to Section 1205 of the Energy Policy Act of 1992	8
Regulations Under Section 32 of the Public Utility Holding Company Act of 1935	9
Transactional Finance Bulletin Published by McDermott, Will & Emery, October 6, 1992	10
Transactional Finance Bulletin Published by McDermott, Will & Emery, November 1992 (Special Energy Act Issue)	11
Federal Energy Regulatory Commission Policy Statement Issued October 26, 1994 Regarding Pricing of Transmission Services	12

BEST AVAILABLE DOCUMENT

VOLUME IV

	TAB
United States - State:	
California Standard Long-Term Power Purchase Contract (Example - 1985)	1
Order Instituting Rulemaking and Order Instituting Investigation, Filed with the Public Utilities Commission of the State of California	2
The Power of the State, A Fifty-State Survey of Renewable Energy (Excerpts)	3
Paper Entitled "Planning Barriers to Renewables", Presented at the NARUC-DOE National Regulatory Conference on Renewable Energy (October 3-6, 1993)	4
Paper Entitled "Financial Economics and Renewable Energy", Presented at the NARUC-DOE National Regulatory Conference on Renewable Energy (October 3-6, 1993)	5
Renewable Energy and Utility Regulation (Excerpts)	6
Investing in the Future: A Regulator's Guide to Renewables, by J. Hamrin & N. Rader	7
Investing in the Future: A Regulator's Guide to Renewables, by J. Hamrin & N. Rader (Appendix F)	8
Markets for Power: An Analysis of Electrical Utility Deregulation, by P. Joskow and R. Schmalensee	9
Incentive Regulation for Electric Utilities, by P. Joskow and R. Schmalensee	10
Excerpt from Federal Energy Regulatory Commission Case Regarding Wheeling/Banking	11
Articles Regarding Renewable Energy	12

BEST AVAILABLE DOCUMENT

TAB 1

Argentina:

Decree No. 634

NATIONAL EXECUTIVE
POWER

634
Buenos Aires, April 12, 1991

In view of the State's reform pursuant to Law No. 23,696 and

WHEREAS:

It is necessary to foster a more open market in order to provide the favorable technical and economic conditions necessary to develop competitiveness, and implement measures to guarantee a greater efficiency.

That private investment should be allowed, to decentralize the decision making process in the energy market (investment, price, etc.) and government responsibility should be concentrated on designing and executing higher policy as well as the regulatory and oversight functions needed to operate the diverse activities of this sector.

That it is useful to modify the procedures and regulatory provisions regulating the sector in order to create a process and regulatory framework adequate to produce the new structures.

That the development of the energy sector must be consistent with the use of alternative energy resources and norms must be established for environmental protection and the rational use of the above mentioned resources.

That the National Executive Power enjoys the power to issue this decree, according to the power granted by Law 15,336 and 23,696.

Therefore,

THE PRESIDENT OF THE ARGENTINE NATION

DECREES:

ARTICLE 1.- Objectives: The general objective of privatizing the energy sector is to achieve efficient generation, transmission and distribution of electricity, to benefit the consumer by providing high quality, reasonable non-discriminatory rates which reflect efficiency cost in those cases where monopolies dominate the market, in order to achieve conditions and operating rules similar to the rest of the economy.

12

NATIONAL EXECUTIVE
POWER

ARTICLE 2.- Scope: The conduct of business of national enterprises and of Argentine representatives within bi-national energy sector organizations must be compatible with the objectives stated in the above article. National enterprises shall be restructured to achieve said objectives within the present framework of laws and decrees in force, with regulations implementing the new regulatory framework to be established and instructions given by competent bodies of the National Government.

ARTICLE 3.- Transition Period: Privatization of the energy sector shall be in full force by January 1, 1993. The period starting from the date of this decree to the date above mentioned shall be known as the Transition Period.

CHAPTER 2. Energy Market

ARTICLE 4.- Components. The Energy Market is to be made up of two levels: a) the wholesale market, including power generators, and power transmission and distribution enterprises, also including individual consumers whose electricity demand is equal to or greater than the amount duly established in the regulations and b) sale to end-users, made up by distributing enterprises and their customers.

ARTICIE 5.- Operation. At the above-mentioned market levels, operations shall be carried out by transactions freely agreed upon at the first level and regulated at the second, according to provisions set forth in the previous article.

ARTICLE 6.- Types of Transactions. There are two types of transactions with regulated rates: I) Distributors' supply to their own end-users, and II) Producers' supply to distributors, in the portion set aside for the above-mentioned supply I). However, in the latter case producers and distributors shall be encouraged to enter into transactions based on prices agreed upon freely under competitive and open conditions, and reported to the Regulatory Entity to avoid discriminatory treatment. This same criterion shall be applied to the power supplied by producers to individual consumers whose maximum demand is equal to or greater than the level duly established by regulation.

CHAPTER 3. Generation, Transmission and Distribution.

ARTICLE 7. Generation Industry. Generation activities shall be open to the entry of private enterprises for the purpose of renovating and operating existing facilities or installing new facilities as long as they comply with the technical, economic and environmental requirements set forth in the Regulatory Framework. The following conditions will be encouraged: 1) that there be several bidders under competitive market access conditions; 2) that there be participation of private capital and, 3) that the production of the enterprises be distributed in a

coordinated manner by the entity in charge of distribution under non-discriminatory conditions and with the purpose of optimizing the total operation of the electric power system.

ARTICLE 8.- SERVICIOS ELECTRICOS DEL GRAN BUENOS AIRES S.A. and AGUA Y ENERGIA ELECTRICA SOCIEDAD DEL ESTADO shall carry out a program of decentralization of their thermal power generation activities, and later hydroelectric as well, to transfer, by sale or lease of their power plants to private investors, seeking to attract multiple independent bidders to avert monopolistic practices.

ARTICLE 9.- Transmission. Electrical power transmission from the power plants to the final destination shall be carried out by enterprises receiving a regulated rate for this service that will cover their costs, including a reasonable profit, in conditions that promote their efficiency; under the authorization and supervision of the Regulating Entity. To this effect a suitable methodology within the Regulatory Framework shall be established and technical stipulations for entry into this activity shall be set forth.

ARTICLE 10.- Distribution. Distributing enterprises of national jurisdiction, as public services serving captive markets, shall comply with regulations regarding technical economic, pricing and environmental safety stipulations established by the Regulatory Framework. Rates for end-users comply with the methodology established within said Regulatory Framework and be controlled by the Regulating Entity.

CHAPTER 4. Economic Dispatching

ARTICLE 11.- Economic dispatching of the system as stipulated by the Regulatory Framework and specific regulations should meet the requirements of state-of-art technical-economic efficiency as well as system development. These norms shall be applied by an entity in charge of carrying out the economic dispatching of the load, at the same time it shall also assume the technical responsibility for operating the network of generating and transmission units that constitute the Argentine System of Interconnection.

ARTICLE 12.- Producers (generators) who shall sell by means of the dispatching system organization shall each receive a standard rate at each established delivery point. Said rate shall be based on marginal short-term economic cost of the system, starting with a base value that shall include a margin that accounts for which shall take into account the evolution of the risk ofsystem failure and it cost. Distributors shall pay a power production standard rate plus the corresponding differential payment for transmission to the point of interconnection, to be invoiced by the enterprise carrying out the last operation. Revenues obtained by generating enterprises abiding by the described framework, shall be allocated according to their financial needs.

14

NATIONAL EXECUTIVE
POWER

ARTICLE 13.- The dispatching system organization shall prepare semi-annual and annual guidance handbooks with monthly up-dates offering sufficient information for wholesaler markets.

ARTICLE 14.- Autogenerators (self-generating plants). Those generating plants with output higher than the level to be established by the Regulatory Framework shall be served by the dispatching system under the same conditions as those other private and independent producers.

CHAPTER 5. Regulatory Framework

ARTICLE 15.- Within a period not greater than four (4) weeks, the SUBSECRETARIA DE ENERGIA ELECTRICA shall submit stipulations to determine the Regulatory Framework of the Energy Sector, taking into account technical, economic, managerial and legal aspects related to the organization, operation and development of the electric power industry. The respective regulations shall include procedures to protect the interests of consumers, establishing a methodology for setting the transmission and distribution rates. It will also determine the structure and operation of the Regulatory Entity.

CHAPTER 6. Business Plans

ARTICLE 16.- While the energy distribution and marketing privatization process takes place pursuant to Decree 2074/90 for the Federal Capital and metropolitan area, SERVICIOS ELECTRICOS DEL GRAN BUENOS AIRES S.A., AGUA Y ENERGIA ELECTRICA SOCIEDAD DEL ESTADO and HIDRONOR S.A. shall be restructured to comply with stipulations set forth by said Decree.

CHAPTER 7. Transition

ARTICLE 17.- Office regulations. Within six (6) weeks, the SUBSECRETARIA DE ENERGIA ELECTRICA shall determine, by means of a resolution, the economic dispatching regulations for the transition period.

ARTICLE 18.- The MINISTERIO DE ECONOMIA (SUBSECRETARIA DE ENERGIA ELECTRICA) has authority to enforce this Decree.

ARTICLE 19.- During the transition period, rules for operating the wholesale market shall be established by the SUBSECRETARIA DE ENERGIA ELECTRICA to be reported to all interested parties. The duration of this Decree may be extended beyond January 1, 1993 if the Regulatory Entity to be created, pursuant to the Regulatory Framework, so determines it.

15

NATIONAL EXECUTIVE
POWER

ARTICLE 20.- To be reported, published and delivered to the DIRECCION NACIONAL DEL REGISTRO OFICIAL and be filed.

Decree No. 634

(Illegible signature to the right of the document. Underneath and to the left another illegible signature and below it: Dr. Domingo F. Cavallo.

TAB 2

Australia – State of Victoria:

State Electricity Commission of Victoria: Independent Generation Policy

STATE ELECTRICITY COMMISSION OF VICTORIA

INDEPENDENT GENERATION POLICY

AUGUST 1990

18

Table of Contents

List of Tables

EXECUTIVE SUMMARY 1
Main Features of Policy 2
Premiums for Cogeneration and Renewables Projects 2
Maximum Rates for Agreed Output & Integrated Operation 2
Base Firm Rates 3
Base Non-Firm Rates 3
Premiums at Lower Voltage Levels 3

CHAPTER 1: INTRODUCTION 5

CHAPTER 2: TYPE & SIZE CATEGORIES 9

CHAPTER 3: POTENTIAL 11
3.1 Potential by the Early 1990s 11
3.2 Long Term Potential 11

CHAPTER 4: AVOIDED SUPPLY COSTS 15
4.1 Supply/Demand Outlook 15
4.2 Short-Term Generation Costs 15
4.3 Long-Run Generation Costs 16
4.4 Power Grid Costs 17
4.5 Summary of Avoided Costs 18

CHAPTER 5: PRICING 21
5.1 Buy-back Prices 21
5.2 Project Size & Performance Standards 21
5.3 Premiums for Energy Policy Considerations 22
5.4 Escalation Provisions 23
5.5 Standby Charges 23
5.6 Wheeling 25
5.7 Summary of Buy-Back Prices 25

BEST AVAILABLE DOCUMENT

19

CHAPTER 6: FINANCIAL IMPLICATIONS 29
6.1 SECV Revenue Loss and Buy-Back Costs 29
6.2 Financial Impacts of Existing Incentives Package 30
6.3 An Aggressive Or Medium Program? 31

CHAPTER 7: PROGRAM TO THE MID 1990s 35
7.1 Targets For Independent Generation 35
7.2 Program Elements 36
7.3 Organisation 37
7.4 Strategy 38

APPENDICES 41

A1 - EXISTING INDEPENDENT GENERATION 43

A2 - PERFORMANCE STANDARDS 45
A2.1 Standby Arrangements 45
A2.2 Small & Medium Projects (Excl. Renewable) 45
A2.3 Small and Medium Projects - Renewable 47
A2.4 Large Projects 48
A2.5 Liquidated Damages 49

BEST AVAILABLE DOCUMENT

AUG 1998

List of Tables

Table S.1 Independent Generation Buy-Back Prices (¢/kWh) 4
Table 3.1 Independent Generation Projects (As at end January 1990) 12
Table 3.2 Expected Cogeneration & Renewable Energy within Next 5 Years 13
Table 3.3 Cogeneration in Moderate Load Projections 13
Table 4.1 Summary of Avoided Costs 19
Table 5.1 Current Standby Charges 24
Table 5.2 New Negotiable Standby Charges. 25
Table 5.3 Summary of Proposed Buy-back Pricing (1989/90) 26
Table 5.4 Summary of Proposed Buy-back Pricing (1990/91) 27
Table 6.1 Usage of Independent Generation. 29
Table 6.2 SECV Revenue Loss & Buy-back Costs (6.6-22 kV Cogeneration) 30
Table 6.3 Cash Flow and Profit Impacts of Existing Package 31
Table 6.4 Capacity Additions (MW). 32
Table 6.5 Impacts of Aggressive Program ($M). 33
Table 6.6 Impacts of Medium Program ($M) 33
Table 7.1 Targets for Total Grid Connected Independent Generation 35
Table A1.1 Existing Independent Generation. 44
Table A2.1 Average Annual Peak Period Buy-back Price - Medium Projects 46
Table A2.2 Average Annual Peak Period Buy-back Price - Medium Renewable Projects. 47

BEST AVAILABLE DOCUMENT

21

EXECUTIVE SUMMARY

The SECV's policies for future independent generation connected to the power grid have been reviewed to provide a basis for decision making beyond the current Cogeneration and Renewable Energy Incentives Package.

There is potential for up to about 600 MW of independent generation capacity by the mid 1990s but this quantity could not be economically developed unless the supply/demand outlook changes dramatically in favour of substantial additional load growth or there is a decline in the expected performance of existing generation plant. Avoided supply costs in the 1990s are estimated to be around 2.2 c/kWh (average peak and off-peak).

Long run avoided supply costs to pool are estimated at 6.4 c/kWh in the peak period and 1.5 c/kWh in the off-peak period. These long run costs have been used as a basis for determining the buy-back rates for independent generation.

From a consideration of the plant/load outlook over the next 5 to 10 years it has been concluded that a maximum of 220 MW of additional independent generation could be connected to the system by the mid 1990s including the 150 MW under the Incentives Package without having an unduly adverse impact on the SECV's business position. Appropriate cumulative development limits are:

Minimum	Maximum	
40 MW	40 MW	by 1989/90
65 MW	80 MW	by 1990/91
110 MW	130 MW	by 1991/92
155 MW	180 MW	by 1992/93
170 MW	200 MW	by 1993/94
190 MW	220 MW	by 1994/95

Achievement of the maximum level above is estimated to have a NPV cost (at 8% real) of around $75M by 1994/95.

The above limits for total grid connected independent generation will be revised and updated with sufficient lead time such that opportunities for independent generation are not [illegible]mpted by decisions taken by the SEC for its future supply options. Revision of the [illegible] will be included in each Electricity Development Strategy and Implementation Rev[illegible]

BEST AVAILABLE DOCUMENT

22

With a limited program it is important that the SECV's strategy for Independent Generators in the next 5 years should concentrate on actions with high added value. Priority, for example, should be given to:

- achieving a diversity of project types;
- capturing lost opportunities; and
- acquiring cogeneration rights for future development.

The following dates will apply to the close off of the existing Incentives Package.

- Entry to the Cogeneration and Renewable Energy Incentives Package will close on 31 December 1990.
- Heads of Agreement are to be negotiated by 31 June 1991.
- Contracts are to be exchanged or completed by 31 December 1991.
- To receive the full incentives package, Cogeneration projects shall be operational within 18 months of signing a contract and Renewable projects within two years of signing a contract. Projects commencing beyond these dates shall receive a correspondingly reduced period in which incentives are applied.

Responsibility for any environmental, planning and/or works approval shall be the responsibility of the proponent of an independent generation project and not the responsibility of the SECV.

Main Features of Policy

The firm and non-firm rates and adjustments are summarised in the Table S.1. The main features of the policy are summarised below.

Premiums for Cogeneration and Renewables Projects

There are four categories of project according to energy source:

Thermal	-	Use of fossil fuel.
Waste	-	Combustion of waste materials or landfill gas.
Cogeneration	-	Use of waste heat for or from electricity generation.
Renewable	-	Energy source not involving combustion.

Premiums on buy-back prices of 10% for cogeneration and projects based on waste sources and 15% for generation based on renewable energy are offered to encourage more environmentally acceptable generation sources.

Maximum Rates for Agreed Output & Integrated Operation

Maximum buy-back prices will be offered to projects which provide an agreed amount of generation and have maintenance schedules integrated with the operation of the SECV system thus reducing the amount of reserve plant needed to be carried by the SECV.

The maximum rates are not to apply to the smaller projects where it is not practical or cost effective to administer these projects as part of the SECV system. For this reason:

BEST AVAILABLE DOCUMENT

- the firm and non-firm rates for are reduced by 2.5% for projects less than 50 MW which supply at agreed performance levels; and
- the firm and non-firm rates are reduced by 10% for projects where there is no agreed performance standard.

Less stringent performance standards apply to renewable energy projects to recognise the lower level of predictability of energy yield from year to year.

Performance standards can be assessed on the basis of generation sold to the SECV or on the basis of the total generator output.

For the above purposes three categories of project are considered:

Small	-	0 to 10 MW
Medium	-	above 10 MW and up to 50 MW
Large	-	above 50 MW

Base Firm Rates

Buy-back prices for firm power purchase are 6.60 ¢/kWh in the peak period from 7am to 11pm (working days) and 1.85 ¢/kWh off-peak for projects supplied at the 220 kV level or above. These rates are to apply for Large Projects and for contract periods of 15 years with lower rates for shorter contract periods. (Rates for 1990/91)

Base Non-Firm Rates

Non-firm buy-back rates are 2.21 ¢/kWh in the peak period and 1.10 ¢/kWh in the off-peak period at the 220 kV level or above for Large Projects. (Rates for 1990/91)

Premiums at Lower Voltage Levels

Premiums for projects connected at lower voltage levels are offered which allow for savings in the transmission and distribution system.

BEST AVAILABLE DOCUMENT

24

Table S.1 Independent Generation Buy-Back Prices (¢/kWh)

	Option 4	Option 1	Option 2	Option 3
Voltage Levels (kV)	415	6.6-22 kV	66 kV	220-500 kV
A - PREVIOUS PUBLISHED RATES (1989/90)				
Rates for Firm Availability of Thermal Plant				
Peak Periods	7.04	6.73	6.64	6.48
Off-Peak Periods	0.97	0.96	0.94	0.91
B - MAXIMUM RATES (To apply from 1 July 1990 for 15 year contracts)				
Rates for Non-Firm Availability of Thermal Plant				
Peak Periods	2.38	2.28	2.25	2.21
Off-Peak Periods	1.19	1.14	1.13	1.10
Rates for Firm Availability of Thermal Plant				
Large Projects (50 MW and above)				
Peak Periods	N/A	N/A	7.00	6.80
Off-Peak Periods	N/A	N/A	1.69	1.65
Small and Medium Projects (0 to 50 MW) Subject to Performance Standards				
Peak Periods	7.26	6.97	6.83	6.63
Off-Peak Periods	1.78	1.71	1.69	1.65
Small (up to 10 MW) Not Subject to Performance Standards				
Peak Period	6.71	6.44	6.30	N/A
	1.78	1.71	1.69	N/A

Premiums on Rates for for both Firm and Non-Firm Availability

Cogeneration and Waste	+10%
Generation from Renewable Energy	+15%

Notes: For contract durations less than 15 years, the Rates for Firm Availability will be subject to a reduction of 6.37% in the Peak-Period rate, and 3.33% in the Off-Peak rate, for each year that the contract duration is less than 15 years. The minimum contract duration shall be 5 years.

BEST AVAILABLE DOCUMENT

25

CHAPTER 1: INTRODUCTION

Substantial potential exists for cogeneration in Victoria which results in more efficient use of energy and, from a total resource cost perspective, could provide cheaper power to society than from new centralised generation facilities.

Cogeneration in the industrial and commercial sectors involves customers installing their own generation plant utilising waste heat to generate electricity or, using the heat associated with generating electricity, to provide process heat.

Current technologies used in the production of electricity have thermal conversion efficiencies ranging from 29%, for brown coal fired plant, to 44%, for combined cycle gas fired plant. For the combined production of electricity and process heat (cogeneration) thermal conversion efficiencies of up to 80% are possible where the electrical and process heat requirements are closely matched. Cogeneration is potentially able to save up to 30% of the fuel required to produce the same power and process heat separately. This can result in a substantial reduction in combustion products, primarily CO_2.

In Victoria there is substantial potential for a wide range of renewable energy sources. Apart from hydro-electricity, large scale renewable technologies are not yet competitive but in the long term, with continued research and development, the economics of these sources can be expected to improve. In the medium term, apart from a number of small hydro-electric projects (less than 20 MW), large scale wind farms appear to be the most likely renewable energy sources for Victoria.

The use of renewable energy to generate electricity offers opportunities for sustainable development which avoids emissions of CO_2, NOx, SOx and particulates usually associated with non-renewable sources.

Another technology that offers considerable attraction from an environmental viewpoint is the use of landfill wastes to generate electricity. This technology could make a significant contribution to reducing methane emissions from landfill. The production of electricity from gas collected at a number of Victorian landfill waste sites is economically attractive. The attractiveness of these generation options would be significantly improved if the Government "encouraged" tip owners to collect and, as a minimum, "flare" the landfill gas emissions.

BEST AVAILABLE DOCUMENT

26

The Cogeneration and Renewable Energy Incentives Package has attracted a good deal of interest in cogeneration and renewable energy and landfill waste sources for electricity production from both the private and public sectors. The Incentives Package was launched in June 1987 by the SECV and DITR as a temporary measure to give impetus to the cogeneration and renewable energy industry and to develop competitive options to centrally generated electricity.

SECV and Government policy has developed to a position where cogeneration and renewable energy projects are seen to be an important component of the economic supply of electricity.

Progress with the Incentives Package to date has been excellent. A total of 43 projects are being considered for a total capacity of 228 MW. Under the Package it is expected that by 1994/95 there will be an extra 150 MW of cogeneration and renewable energy sources generating about 720 GWh per annum.

Also, outside the Incentives Package, a number of projects above 10 MW capacity have been progressed. Potentially these total about 160 MW. Two projects for a total of 32 MW are under construction, two projects for a total of 66 MW have been proposed through signed "Heads of Agreement" with the SECV and a further 2 projects for a total of about 60 MW are progressing towards Heads of Agreement.

While the economics of cogeneration to the energy consumer remain as favourable as they are, it is only a matter of time before it develops into a significant contributor for meeting the state's power needs.

With the expectation that Incentives Package target of a total of 150 MW will be committed by the end of 1990, it is now appropriate to develop a new policy for alternative energy sources such as cogeneration and renewables. Also, with a significant number of private and public sector proponents expressing interest in being involved in the generation of electricity in conventional thermal plant for sale to the grid or for their own use it is appropriate to consider the wider issue of "independent generation".

In this policy statement, all electricity not generated by the SECV is referred to as independent generation. This terminology is used to express the idea that the generation is non-SECV but connected to the power grid. It is not necessarily "private" generation as other government instrumentalities might be project proponents. The term "independent" implies other organisations partially or totally owning and operating generating plant to supply electricity for their own use or sale to the grid.

In the long term Independent Generation has the potential to:

- continue to reduce the cost to society of energy service needs and at the same time reduce the capital intensity of the SECV and hence reduce its debt level and exposure to interest rate fluctuations (the cost of energy produced by the cogeneration projects currently under assessment within the Incentives Package is around 4 ¢/kWh);

BEST AVAILABLE DOCUMENT

- encourage cost effective independent generation options which are competitive to Loy Yang B3 & B4; and
- support the Government's strategy of aiming for the Toronto goal of a 20% reduction in CO_2 emissions by 2005.

However, there are substantial cost penalties to the community if independent generation develops too rapidly ahead of the community's overall need for the additional power it will provide. Studies undertaken in the SECV/DITR Demand Management Development Project (Integrated Resource Planning - Information Paper No 4) indicate that DM at the appropriate level and implemented at the appropriate time offers a means of reducing the cost of energy services in Victoria from society's perspective. With a Medium level of DM commencing in the mid 1990's, society as a whole is paying less for the electricity required to satisfy its needs for energy services.

The priorities in the short term therefore are aimed at finding the most effective ways of overcoming the main barriers to a rapid and significant expansion of Independent Generation in Victoria. Implementation can then be managed to maximise the social benefits.

The SECV's policies for future independent electricity generation connected to the power grid and either generated for customer's own use or purchased by SECV have been reviewed taking into account the following:

- Categories of Independent Generation - recognising the various impacts on resource utilisation and environmental impact of different generation sources and the impacts on SECV operations.
- The Supply/Demand Outlook in the 1990s - recognising the expected excess of supply capability in the middle half of the 1990's.
- Long Run Avoided Costs - recognising that in the long term Independent Generation needs to be assessed against the SECV's long run avoided costs.
- Increased Focus on Cogeneration & Renewables - recognising these generation options, together with conservation as the principal means of reducing CO_2 emissions in meeting the challenge of the Greenhouse Effect.
- Business Benefits/Costs - recognising that with the installation of Loy Yang B units 1 and 2, any independent generation installed in the mid 1990's will be at some cost to the SECV, but in the longer term offers a means to reduce the SECV's debt risks.
- Medium DM Approach - recognising the Medium level of demand management recommended in the SECV/DITR DM report "Integrated Resource Planning - December 1989".

In establishing a comprehensive policy for independent generation covering all types of generation from very small to large, each with different performance standards, consideration has been given to the following.

BEST AVAILABLE DOCUMENT

28

- Pricing - setting the base pool level (220 kV) buy-back rate at the long run system marginal costs for peak and off-peak periods rather than short term avoided costs.
- Energy Policy Implications - providing a premium for projects that reduce emissions, particularly CO_2 and the encouragement of renewable energy resources.
- Power Grid Costs - allowing for reduction in losses and avoided capital and operating costs in the grid as the supply from independent generation is at lower voltage levels than the pool level.
- Performance Standards - ascribing a value to attaining targeted performance levels.
- Wheeling - ensuring that there are no barriers to the economic flow of electricity through the power grid.
- Standby Charges - the probable aligning of these charges and H1 and H2 normal supply charges in the near future.
- Program to the Mid 1990s - establishing targets for independent generation within the context of a Medium level of DM and developing strategies to ensure the most appropriate projects are implemented and that opportunities for the longer term are not lost.
- Organisation - the areas of the SECV that would have responsibility for negotiating arrangements for independent generation projects.
- Strategy - how SECV will manage the development of independent generation to maintain a balance of electricity supply and demand in Victoria.

Each of these aspects are addressed in this policy statement.

Unless otherwise stated, cost figures are in 1989/90 prices. The figures in Tables S.1 and S.4 apply to 1990/91.

BEST AVAILABLE DOCUMENT

CHAPTER 2: TYPE & SIZE CATEGORIES

The range of opportunities for independent generation can be categorised according to the nature of the primary fuel or energy supply and the extent to which SECV would control the operation of the generation facility.

The four categories considered are:

- Thermal - Fossil fuel supply (natural gas, oil or coal) with little or no usage of waste heat.
- Waste - fuel supply from landfill gas or biomass.
- Cogeneration - Fossil fuel supply with commercial usage of most or all of the waste heat.
- Renewable - Energy sources that do not involve combustion processes, such as hydro, wind, and solar energy.

Size refers to the amount of generating capacity installed at one site and connected to the power grid through one high voltage feeder. It is not related to the maximum net export to the power grid.

Size category boundaries have been developed after considering the operational implications of power sources of these sizes. It is not considered practical or cost effective to operate and administer smaller projects as part of the SECV system. Maximum value is ascribed to those projects which provide an agreed amount of generation and have maintenance schedules integrated with the operation of the SECV system thus reducing the amount of reserve plant needed to be carried by the SECV.

Taking the above operational and administrative aspects into consideration, the following size categories are proposed:

- Small (up to 10 MW) - Where proponents have the option to comply with performance standards to achieve maximum buy-back rates.
- Medium (10 MW - 50 MW) - Where proponent is required to achieve performance standards.
- Large (above 50 MW) - Where operations and maintenance are integrated with the SECV system.

BEST AVAILABLE DOCUMENT

However in some cases it might be necessary to treat projects near the 10 MW and 50 MW boundaries as exceptions to ensure that the full benefits of the proposed projects are achieved.

Some consideration could to be given to contract provisions for unusual system conditions. For exsmple. SECV might need to be able to request off-loading of medium scale projects on rare occasions in off-peak periods to avoid auxiliary fuel use in SECV brown coal power stations.

BEST AVAILABLE DOCUMENT

CHAPTER 3: POTENTIAL

3.1 Potential by the Early 1990s

Some 190 cogeneration and renewables projects have been considered during the past 2 years. At the end of March 1990, 31 projects are committed or nearing commitment. The number and type of projects are listed in Table 3.1. These include projects both inside and outside the Cogeneration and Renewable Incentives Package.

If all the projects, excluding those all ready in operation, were to proceed there would be some 225 MW of additional indepencent generation plant in operation in Victoria by around 1992/93 over and above the existing 157 MW as detailed in Appendix 1. In all, the total amount of independent generation existing or under serious consideration is about 400 MW.

There is however a lot of uncertainty concerning just how much of this new independent generation plant will go ahead on the basis of existing offers and commitments by SECV. A careful analysis of the projects included in Table 3.1 suggests some 180 MW are expected to be operational by 1994/95. Table 3.2 shows the segregation by plant type for this expected amount of capacity.

Of the total energy contribution (proponents own use and SECV purchase) of 1150 GWh, about 600 GWh is attributable to projects within the Incentives package and another 550 GWh is expected to arise from other developments.

3.2 Long Term Potential

The 1989 load projections have been prepared on the basis of including the expected results of the Cogeneration and Renewables Incentives Package and considering various levels of demand management (DM) activity. Zero, Medium and Aggressive DM.

The levels of cogeneration (at the generation level) assumed in the moderate load growth projection are shown in Table 3.3. In these projections, cogeneration includes the renewables, waste and thermal generation.

Of the energy production levels indicated in Table 3.3, some 50% of the output of generation is assumed to be purchased by the SECV.

BEST AVAILABLE DOCUMENT

Table 3.1 Independent Generation Projects (As at end January 1990)

Status	No. of Projects	Capacity of Each Type (MW)				Total (MW)
		Cogen	Thermal	Waste	Renewables	
Within Incentives Package						
Operational (7.4 MW purchased)	4	12.2			6.3	18.5
Design & Construction Stage	4	27.2		7.7		34.9
Heads of Agreement	19	46.4		6.2	15.0	67.6
Progressing toward Heads of Agreement	16	96.6			10.0	106.6
Total Within Package	43	182.4	-	13.9	31.3	227.6
Outside Incentives Package						
Under Construction	2	32.0				32.0
Heads of Agreement	2	16.2	50.0			66.2
Progressing toward Heads of Agreement	2	59.7				59.7
Total Outside Package	6	107.9	50.0			157.9
TOTAL	46	290.3	50.0	13.9	31.3	385.5

BEST AVAILABLE DOCUMENT

Table 3.2 Expected Cogeneration & Renewable Energy within Next 5 Years

	Capacity Installed (MW)	Annual Generation (GWh)	SECV Purchase (GWh)
Cogeneration	124	760	380
Thermal	30	250	250
Waste	16	130	130
Renewables	13	60	60
TOTAL (rounded)	180	1200	820

Table 3.3 Cogeneration in Moderate Load Projections

FINANCIAL YEAR	MEDIUM DM		AGGRESSIVE DM	
	(MW)	(GWh)	(MW)	(GWh)
1994/95	220	1300	380	2300
1999/00	300	1900	550	3500
2004/05	380	2300	760	4500

BEST AVAILABLE DOCUMENT

34

CHAPTER 4: AVOIDED SUPPLY COSTS

The economic basis for development of independent generation is avoidable supply costs in the SECV power grid and generation systems.

4.1 Supply/Demand Outlook

In the period to 1991/92, the target improvements in the Latrobe Valley plant performance result in a system capability that closely matches the Moderate load growth projection with Medium demand management. In the event of High growth or lack of success with demand management, the window of opportunity in 1991/92 to refurbish Hazelwood Units 7&8 would disappear. The PLE work on these units is now being delayed for reconsideration after the Loy Yang B Unit 1 and possibly after Loy Yang B Unit 2 comes into service.

With the installation of the Loy Yang B1 and B2 units programmed for commercial service of Unit B1 by winter 1993 and with possible delay of Unit B2, there is a potential surplus capability of about 1500 GWh above the High load growth projection for several years from 1994/95. This surplus would be eventually taken up by load growth and decline in capability as a result of retirements of the first Hazelwood units.

In the event of lower than High growth and success in demand management initiatives, gas purchases could be reduced and some brown coal plant placed in reserve to reduce operational costs.

Unless supply/demand strategies eliminate the surplus requirement and/or create the need for a block of energy (additional smelter pot line) and/or interstate sales, there is no short-term economic basis for additional supply being encouraged prior to 1995. The savings from placing existing plant in reserve are likely to be much less than the costs of encouraging new independent generation.

4.2 Short-Term Generation Costs

The integrated analysis conducted as part of the Joint SECV/DITR Demand Management Development Project indicated marginal peak period sent out generation costs of 2 to 2.5 ¢/kWh and around 1 ¢/kWh off-peak in the period to 1994/95. The peak period costs are based on additional gas fired generation at Newport and Jeeralang and opportunity interchange purchases form interstate.

BEST AVAILABLE DOCUMENT

In the period to 1994/95 the generation costs are not impacted by any need for a change in timing of new plant. Recent studies on the timing of Loy Yang B2 indicate that even with plant performance levels at 96% of target levels and with high growth, Loy Yang B2 is not required earlier than November 1995.

In the period 1995/96 to 1999/00, the marginal generation costs are estimated to be about 2.5 to 4.0 ¢/kWh peak and 1.0 to 1.5 ¢/kWh off-peak.

These costs in the peak period are based, at the low end, on additional gas fired generation and energy purchases from interstate, and at the higher end on costs involved in the earlier installation of new plant particularly the plant to follow Loy Yang B2.

The off-peak period costs reflect the significant amount of spare brown coal energy expected to be available throughout the 1990s. Towards the end of the 1990s some component of off-peak energy, especially in the period 11pm to 1am weekdays, could be supplied by gas-fired plant which gives rise to the higher cost of 1.5 ¢/kWh.

The range indicated for the generation costs also considers the range of load growth between the High and Low growth scenarios.

4.3 Long-Run Generation Costs

In the Electricity Development Strategy and Implementation Review (EDSIR) it was shown that at gas prices below $2.60/GJ, a 300 MW block of gas turbine plant would be economical before Loy Yang B3. In the time frame to the end of the century there are likely to be some improvements in brown coal technology resulting in reduced capital and operating costs which would give a break-even gas price of around $2/GJ for a 300 MW block of gas turbine plant.

Alternatively, the Oaklands project or other black coal energy sources could offer electricity at prices competitive with Loy Yang B Units 3&4 and cheaper than brown coal power stations at new sites such as Hazelwood South.

However, gas fired plant costs provide a useful reference indicative of expected long run costs, especially for the peak period.

Long run peak period sent out generation costs for gas turbine plant, are about 5.5 to 6.5 ¢/kWh depending on the fuel cost ($2.50 to $3.50/GJ). This peak period sent out cost provides a basis for determining buy-back rates which represent the long term avoided cost.

The long run off-peak costs vary between 1 and 2 ¢/kWh depending on the plant mix and load shape.

The average of these long run peak and off peak costs is consistent with the results of the scenario studies undertaken for the Integrated Analysis as part of the Joint SECV/DITR Demand Management Development Project.

The average sent out generation cost is slightly lower than the Loy Yang B1 & B2 sent out costs of about 4.2 ¢/kWh because it is expected that following the installation of these units there will exist a substantial amount of spare brown coal energy in the off-peak period.

BEST AVAILABLE DOCUMENT

:4 Power Grid Costs

ɔropriate long-term marginal transmission costs would recognise the operating and .ntenance costs of power grid augmentations and the impact of changes in power grid ɔsses. Such costs would exclude works, maintenance and losses associated with the ɪterconnection to South Australia.

Energy losses occur in the transmission of power to Melbourne on the 500 kV system and transmission through the metropolitan or regional 500 kV and 220 kV system to the 220 kV bulk supply points. These losses are estimated to amount to about 4.5% of energy sent out from power stations (average for peak and off-peak).

The losses have two components:

- a fixed component that does not change with system load which is due to operation of base load generation, terminal station service supplies, magnetising losses in transformers and corona losses on power lines; and
- a variable component that changes with system load which is due to electrical resistance in transformers and power lines.

Since the Victorian power grid has reached a plateau in development such that there are no major line works expected in the next 10 years or so, only the variable component is affected by independent generation. The fixed loss component would be affected in the longer term as the installation of power grid elements could be avoided.

The avoided loss costs in the power grid due to independent generation saving depend on voltage level as follows:

Supply Voltage	Incremental Loss Saving from Sent Out Energy
220 kV	3%
66 kV	5%
22 kV	6%
415 V	10%

The % loss saving is added as a % to the avoided system energy costs at the sent out level. There is no practical difference between the peak and off-peak values.

The injection of power from independent generation into the system would off-load power grid assets and, depending on the confidence with which the generation output is available at times of high system loading, may allow deferral of augmentations to the power grid.

For supply voltage levels of 66 kV and above, the non-availability of small independent generation inputs is covered by the redundancy in the design of the terminal or zone substation required to cover the outage of a transformer. The probability of concurrent outage of a transformer and independent generation plant (with an availability in the order of 95%) at a time of station maximum demand is low and is considered to be an acceptable risk. In practice, the presence of reliable independent generation would be used to justify the deferral of augmentation works by a year or so depending on the size of the generation and the underlying load growth.

BEST AVAILABLE DOCUMENT

For supply voltages below 22 kV, the independent generation becomes very significant compared to the distribution system ratings, therefore no benefits can be credited for savings within the distribution system.

An indicative annual benefit of injection of 1 kW at time of maximum system loading with availability of 95% is estimated to be:

System Voltage	Annual Benefit Per kW
220 kV	$6.60
66 kV	$9.20
22 kV	$11.80
415 V	$11.80

These cost savings exclude power station connection costs which are included in the system marginal sent-out generation costs.

The asset cost savings detailed above are converted to energy savings by ascribing the benefit shown in the above table over the peak period hours of operation (95% of 4160 hours per year). This gives the following energy benefits at particular voltage levels:

Supply Voltage	Asset Saving Converted to Peak Period Energy Saving
220 kV	0.17 c/kWh
66 kV	0.23 c/kWh
22 kV	0.30 c/kWh
415 V	0.30 c/kWh

These power grid costs are added to the pool costs for projects up to about 10 MW capacity. For medium projects above 10 MW capacity, Power Grid would advise not only connection costs to the most appropriate point of the grid, but also the particular power grid marginal avoided costs applicable to that project at the point of connection to the grid excluding any grid extensions specific to the project. This would be used in negotiating the final project buy-back pricing.

Published buy-back rates include system marginal costs at each voltage level as required. Th e prices apply to projects in the small category, up to 10 MW capacity. For larger projects, the published rates are only indicative and adjustments up or down would reflect the particular impacts of that project on power grid development and operation.

Connection costs for each project including any consequential costs or savings for the grid would be a fixed initial cost charged to the proponent and not related to actual energy production. However, consideration could be given to allowing private contractors to provide connection facilities to SECV standards to overcome objections that SECV connection costs are high and discourage some projects.

4.5 Summary of Avoided Costs

The avoided costs discussed above are summarised in Table 4.1.

BEST AVAILABLE DOCUMENT

Table 4.1 Summary of Avoided Costs

Marginal Generation Sent Out Costs in the 1990s			
1989/90 - 1994/95	Peak		2.0 to 2.5 ¢/kWh
	Off-Peak		1.0 ¢/kWh
1995/96 - 1999/00	Peak Period		2.5 to 4.0 ¢/kWh
	Off-Peak		1.0 to 1.5 ¢/kWh
Marginal Long-Run Generation Sent Out Costs (Beyond 2000)			
Beyond 2000	Peak		5.5 to 6.5 ¢/kWh
	Off-Peak		1.0 to 2.0 ¢/kWh
Transmission Costs to Pool (500, 330 220 kV)			
Short and Medium Term (to 2000)			
Losses	3.0% of energy cost sent out		
Assets	Nil		
Long Term (post 2000)			
Losses	3.0% of energy cost sent out		
Assets	0.17 ¢/kWh (peak period)		
Transmission/Distribution Costs to Supply Points			
Short and Medium Term (to 2000)			
Losses	66 kV	5% of energy cost sent out	
	22 kV	6% of energy cost sent out	
	415 V	10% of energy cost sent out	
Assets	Depends on location (generally nil)		
Long Term (post 2000)			
Losses	66 kV	5% of energy cost sent out	
	22 kV	6% of energy cost sent out	
	415 V	10% of energy cost sent out	
Assets	66 kV	0.23 ¢/kWh (peak period)	
	22 kV	0.30 ¢/kWh (peak period)	
	415 V	0.30 ¢/kWh (peak period)	

BEST AVAILABLE DOCUMENT

CHAPTER 5: PRICING

5.1 Buy-back Prices

Buy-back prices to be offered will be based on the long-run avoided costs. If the buy-back rates were based on the relatively low avoided costs applying over the next 5 to 10 years when there is an expected surplus of supply capability above demand in the years 1993/94 to 1997/98), then it is likely that these rates would never be sufficient to attract independent generation. With the longer lead-times for most central generation facilities, there is usually only a relatively small avoidable variable cost applying to reductions in capability.

Therefore, at the 220 kV level, the peak buy-back price is based on a generation sent out cost of 6 c/kWh. Allowing for about 3% transmission losses and 0.17 c/kWh grid costs, this results in a price of 5.36 c/kWh for the peak period. For the off-peak period, a price of 1.55 c/kWh at the 220 kV level is offered. These rates would apply to projects with long term contractual commitments (15 years).

The short term avoided costs estimated for the mid to late 1990s would apply to projects of shorter term contractual commitment (only 5 years). For the peak and off-peak periods at the 220 kV level, these would be 2.3 c/kWh and 1.03 c/kWh respectively. Variations in contractual commitments between 5 and 15 years will be on a pro-rata basis.

The nor[illegible]m buy-back rate would be equivalent to the immediate term avoided cost estima[illegible] [illegible]or period to mid 1990s), and for the peak period would be 2.06 c/kWh and 1.03 c/kWh off-peak.

5.2 Project Size & Performance Standards

The above avoided costs have been determined for plant which would be scheduled as part of the SECV system, and a high degree of confidence would pertain to the timing and availability of generation.

Provided Independent Generators can deliver the energy amounts agreed to in the supply arrangements, then these energy amounts can be confidently factored into SECV's operational and long term planning.

BEST AVAILABLE DOCUMENT

The above buy-back rates will therefore apply, in full, to projects whose operation and maintenance is integrated with the SECV system. This would usually be the case for large (above 50 MW) projects where maintenance schedules and energy delivery could be negotiated.

For projects below 50 MW it would not be practical to negotiate maintenance or energy delivery schedules, but provided proponents were prepared to supply at agreed performance levels, then the full buy-back rates, less 2.5% would apply to these projects.

For Small Projects (0 to 10 MW), whose performance may be variable and unpredictable, and are not prepared to supply at agreed performance levels, are of lesser value to the SECV because additional reserve would be needed on the SECV system to cater for their lower predictability of output. To reflect this lower value it is proposed that in these circumstances, the buy-back rate be reduced by 10%.

To ensure that the negotiated rates of supply agreed to in the supply arrangements with Independent Generators are adhered to, performance standards can be incorporated into these supply arrangements. Details of the proposed performance structure are provided in Appendix 2.

The performance evaluation applying to an Independent Generator can either be on the basis of delivered energy to the SECV, or, on the basis of the total generator output irrespective of whether it supplies 'own' load or to the SECV, provided the Independent Generator is prepared to supply metered information on the output of the generator to the normal SECV metering point.

For projects up to 50 MW that produce only up to 75% of target performance, the energy rate applying would be the non-firm rate. Between 75% and 95% of target, the rate would vary linearly with performance between the non-firm and firm rates. Between 95% and 105% of target, the firm rate would apply and for that amount above 105% of target, incremental rates would apply. The payment structure would be based on a fixed payment based on the previous year's performance, energy charges at non-firm rates, and end of year adjustments in line with performance.

Similar performance measures would apply to Medium sized renewable energy projects except that they would be less stringent to recognise the variable nature of the resource availability, and also to offer an increased incentive for renewable projects.

Large projects would normally be scheduled for operation by System Control and pricing will be structured based on payments for availability and delivered energy.

5.3 Premiums for Energy Policy Considerations

There are advantages for the SECV and Victoria in promoting cost effective cogeneration and renewable energy projects. The use of waste heat as process steam and natural gas as the primary fuel for associated power generation would reduce the production of CO_2. The same benefit would also be achieved by using renewable energy instead of fossil fuel, especially coal.

BEST AVAILABLE DOCUMENT

Similarly, generation of electricity from landfill gas would have the advantage of converting methane that would otherwise leak into the atmosphere, which has a Greenhouse Effect per molecule 20 times lower than methane. Other waste fuels would eventually be converted into methane or CO_2 by natural processes and so using them immediately to produce electricity would capture that energy and reduce the use of fossil fuel. From an energy policy perspective a premium could be offered to encourage such developments.

Any premium for reduced greenhouse gas production should ultimately reflect the cost of measures planned by the SECV to combat the Greenhouse Effect. This would be included in the SEC's avoided costs and hence the buy-back price. No additional premium would then be required.

The cost of these measures have not been defined and are not reflected in currently estimated SECV avoided costs. Further work is needed to identify such costs. However, it is expected that in future the SECV could incur some 10 to 15% additional costs to meet targets for reduced CO_2 production.

In view of the advantages of renewable energy in reducing emissions of CO_2, NOx, SOx and particulates, and cogeneration in improving efficency of energy use, premiums will be applied to buy-back rates as follows:

- −10% for cogeneration and waste projects; and
- −15% for renewable energy projects.

It is necessary to continue to offer some incentive for renewable energy projects and it is appropriate to offer a higher premium for renewable energy projects than for cogeneration in view of the lower emissions impact. This will be in the form of a 15% increase in buy-back prices.

5.4 Escalation Provisions

For Small projects there will be no specific arrangements for individually negotiated escalation arrangements. There will be a guarantee in the pricing policy that the real buy-back rate would not fall by more than the real reduction in electricity tariffs applicable to industrial customers at that voltage level and comparable demand. A reference date for comparison with industrial electricity prices would be declared applicable to each small project.

For Medium and Large projects negotiated buy-back rates could be offered on two bases: either constant with Melbourne CPI or constant with average retail electricity prices. The starting point would be higher or lower depending on the long term outlook for electricity prices relative to CPI. This would enable producers to match their income from generation to their power costs if they are primarily electricity consumers or to other more generally related costs if they are primarily electricity producers.

5.5 Standby Charges

One of the barriers to further development of independent generation often quoted by prospective project sponsors is the cost of standby charges. The present charges for standby following the 1989 Electricity Pricing Review are as shown in Table 5.1.

BEST AVAILABLE DOCUMENT

Table 5.1 Current Standby Charges

SUPPLY VOLTAGE	DEMAND CHARGE ($/kW/mth)	PEAK ENERGY CHARGE (¢/kWh)	OFF-PEAK ENERGY CHARGE (¢/kWh)
6.6, 11, & 22 kV (Option 1)	3.80	7.69	1.30
66 kV (Option 2)	5.03	6.00	1.14
220 kV & above (Option 3)	1.91	7.26	3.60

In the most recent Electricity Pricing Review, the charges for normal and standby supply were aligned for all high voltage supplies up to and including 66 kV. The demand charges however for these supplies even for normal supplies are considered to be too high and, as part of the SECV's broader short to medium term pricing reforms, they are to be lowered to around $2-2.50/kW/month (December 1989 prices).

In the meantime, these demand charges can be particularly punitive to very low load factor customers such as standby customers. For medium projects therefore, the SECV is prepared to negotiate standby charging arrangements in line with the planned future pricing structure for Tariffs H1 & H2 in exchange for the private generator being prepared to arrange the timing of his major plant maintenance to suit the SECV.

The revenue impacts of any future structure of Tariffs H1 & H2 will need to be fully examined prior to deciding on the appropriate rates. In the meantime it is proposed to apply the standby charges as shown in Table 5.2. These rates could apply for a period of 5 years and after that time the rates consistent with Tariffs H1 & H2 would apply.

BEST AVAILABLE DOCUMENT

Table 5.2 New Negotiable Standby Charges

SUPPLY VOLTAGE	DEMAND CHARGE ($/kW/mth)	PEAK ENERGY CHARGE (¢/kWh)	OFF-PEAK ENERGY CHARGE (¢/kWh)
6.6, 11, & 22 kV (Option 1)	2.15	8.8	1.3
66 kV (Option 2)	2.15	8.4	1.14
220 kV & above (Option 3)	1.91	7.26	3.60

5.6 Wheeling

SECV policy to-date has been to disallow independent generators wheeling power through the SECV grid either for their own use at a separate location or for sale to third parties. To-date this has been justified on the grounds that the Victorian retail electricity prices are aimed at achieving a range of political and social objectives as well as economic objectives.

Whilst there are such distortions in the retail prices, it has been considered that Independent Generators should not have the option of avoiding the adverse impacts of those objectives when they don't generate privately at the point of use. However, when pricing structures have moved toward reductions in cross subsidies, this argument needs to be reconsidered.

In any event, the SECV has been prepared to pay an economic price for any purchased generation. Buy-back rates have been determined which cover the power grid and administrative costs associated with such developments, so that the result is substantially the same as a wheeling agreement. This is particularly so for the medium and large scale projects where provision is made to examine the actual power grid consequences of the project and set the buy-back price accordingly.

It is considered that this policy for independent generation would allow full access to the power grid on an economic and equitable basis. The appropriate time to review this policy would be when the broader issue of access to the grid and/or SECV markets by Independent Generators was being reviewed.

5.7 Summary of Buy-Back Prices

The principles proposed for buy-back prices to apply to Independent Generation are summarised in Tables 5.3 and 5.4. The buy-back prices in Table 5.3 are expressed in 1989/90 (December 1989) dollars. Table 5.4 shows the proposed buy-back prices in 1990/91 dollars.

BEST AVAILABLE DOCUMENT

Table 5.3 Summary of Proposed Buy-back Pricing (1989/90)

Base Buy-Back Prices	Non Firm	Firm for Contracts of		
(220 kV)		5years	10years	15years
Peak Period	2.06¢/kWh	2.31¢/kWh	4.33¢/kWh	6.36¢/kWh
Off-peak Period	1.03¢/kWh	1.03¢/kWh	1.29¢/kWh	1.55¢/kWh
(66 kV)				
Peak Period	2.11¢/kWh	2.38¢/kWh	4.46¢/kWh	6.55¢/kWh
Off-peak Period	1.05¢/kWh	1.05¢/kWh	1.32¢/kWh	1.58¢/kWh
(22 kV)				
Peak Period	2.13¢/kWh	2.43¢/kWh	4.55¢/kWh	6.68¢/kWh
Off-peak Period	1.06¢/kWh	1.06¢/kWh	1.33¢/kWh	1.60¢/kWh
(415 V)				
Peak Period	2.22¢/kWh	2.53¢/kWh	4.75¢/kWh	6.97¢/kWh
Off-peak Period	1.11¢/kWh	1.11¢/kWh	1.39¢/kWh	1.65¢/kWh

BEST AVAILABLE DOCUMENT

45

Table 5.4 Summary of Proposed Buy-back Pricing (1990/91)

Base Buy-Back Prices	Non Firm	Firm for Contracts of		
(220 kV)		5years	10years	15years
Peak Period	2.21¢/kWh	2.47¢/kWh	4.63¢/kWh	6.80¢/kWh
Off-peak Period	1.10¢/kWh	1.10¢/kWh	1.38¢/kWh	1.65¢/kWh
(66 kV)				
Peak Period	2.25¢/kWh	2.54¢/kWh	4.77¢/kWh	7.00¢/kWh
Off-peak Period	1.13¢/kWh	1.13¢/kWh	1.41¢/kWh	1.69¢/kWh
(22 kV)				
Peak Period	2.28¢/kWh	2.60¢/kWh	4.87¢/kWh	7.15¢/kWh
Off-peak Period	1.14¢/kWh	1.14¢/kWh	1.42¢/kWh	1.71¢/kWh
(415 V)				
Peak Period	2.38¢/kWh	2.71¢/kWh	5.08¢/kWh	7.45¢/kWh
Off-peak Period	1.19¢/kWh	1.19¢/kWh	1.49¢/kWh	1.78¢/kWh
Incentives for Plant Type				
Thermal	Nil			
Cogeneration	−10%			
Waste	−10%			
Renewable	−15%			
Performance Standards - Small & Medium Projects (0-50 MW)				
No Standards (Option for Small only)	-10% on both non-firm and firm rates.			
Standards Apply	(Figures in brackets refer to renewable projects)			
	-2.5% on both non-firm and firm rates.			
	Energy up to 75% (45%) of target, non-firm rates.			
	Energy between 75% & 95% (45% & 85%) of target, linear between non-firm & firm rates.			
	Energy between 95% & 105% (85% & 115%) of target, firm rates.			
	Energy above 105% (115%) of target, incremental rates.			

Table 5.4 continued on next page . . .

BEST AVAILABLE DOCUMENT

46

Table 5.4 Summary of Proposed Buy-back Pricing (1990/91) (continued)

Standby Rates	Negotiable down to planned future levels for Tariffs H1 & H2 for medium projects provided plant maintenance arranged to suit SECV.
Price Escalations	
Small (0-10 MW)	Buy-Back rates guaranteed not to fall by more than real reduction in appropriate industrial tariffs.
Medium & Large (>10 MW)	Minimum of escalation with Melbourne CPI or escalation at average electricity retail prices.

BEST AVAILABLE DOCUMENT

CHAPTER 6: FINANCIAL IMPLICATIONS

The financial and environmental benefits of proceeding with an aggressive approach to encouraging appropriate independent generation can be significant in periods when its presence on the system would delay the need for new plant and thus offer considerable cost savings along with reduced levels of CO_2 emissions.

6.1 SECV Revenue Loss and Buy-Back Costs

From SECV's perspective the Independent Generators' (excluding renewables) "own use" results in a revenue loss and the "sell to SECV" quantity results in buy-back costs; both offset by the supply cost savings. The estimated proportions of "own use" and "sell to SECV" generation are shown in Table 6.1.

Table 6.1 Usage of Independent Generation

PERIOD	OWN USE (%)	SELL TO SECV (%)	TOTAL (%)
PEAK	26	40	66
OFF-PEAK	24	10	34
TOTAL	50	50	100

The average revenue loss, existing Incentives Package and proposed buy-back rates for cogeneration by Independent Generators, are shown in Table 6.2, for the 6.6 to 22 kV level and assuming projects qualify for the full rates (ie meet performance standards).

BEST AVAILABLE DOCUMENT

Apart from the 10% incentive for cogeneration, the proposed buy-back rates shown in Table 6.2 reflect the long run avoided cost. The average of the proposed rates is some 1.5 ¢/kWh below that for the existing Incentive Package.

Table 6.2 SECV Revenue Loss & Buy-back Costs (6.6-22 kV Cogeneration)

PERIOD	OWN USE	REVENUE LOSS ¢/kWh	SELL TO SECV	EXISTING RATES ¢/kWh	PROPOSED RATES ¢/kWh
PEAK	52%	8.8	80%	9.27	7.34
OFF-PEAK	48%	1.3	20%	1.48	1.75
TOTAL	100%	5.2	100%	7.71	6.22

However, if the system capability is above demand requirements, as the expected situation for the 1990s, then the savings achieved by the SECV are equivalent to only short term variable costs (about 2.2 ¢/kWh average peak and off-peak). Under these circumstances achievement of additional capability, such as independent generation, could be at a substantial cost.

From a business perspective, the ideal situation is to encourage the implementation of independent generation projects so that they are brought on line rapidly at a time when they can defer plant and thus achieve substantial savings without a prolonged period of operation where the savings are limited to only short term variable SECV costs. This suggests the independent generation option should ideally be pursued vigorously with a starting date some 5 to 7 years before the next major plant expansion is planned (project to follow Loy Yang B2). This would leave time for its impact to be realistically assessed before the plant timing dead-line was reached but not result in an extended period of excess capacity.

6.2 Financial Impacts of Existing Incentives Package

An analysis has been made of the financial impacts of the Existing Incentives Package. This analysis is based on an expected addition of about 100 MW of Cogeneration and generation from Waste.

The financial impacts of the existing Incentives Package are summarised in Table 6.3, including standby revenue where cogeneration offsets customer load.

BEST AVAILABLE DOCUMENT

In present value terms (8% real rate of return) the Package is estimated to cost the SECV some $75M over the next 5 years, and up to about $120M by the year 2000, the period for which the Incentives rates apply. These impacts make allowance for the tariff restructuring necessary to equate the demand charges for the supply contract time-of-use and standby tariffs.

Table 6.3 Cash Flow and Profit Impacts of Existing Package

	FULL IMPACT CASH FLOW FROM 1992/93 $M/YEAR (Dec'1989 values)				
	1991	1992	1993	1995	2000
Revenue Loss	5	10	16	16	16
Buy Back Cost	8	16	23	23	23
Sub-Total	13	26	39	39	39
Supply Cost Saved	4	8	12	12	19
Standby Revenue	1	2	2	2	2
Sub-Total	5	10	14	14	21
Benefit (Cost)	(8)	(16)	(25)	(25)	(18)
NPV Benefit (Cost) (8% real)					
Over 5 Years ($M)				(75)	
Subsidy				4.1¢/kWh	
Over 10 Years ($M)					(123)
Subsidy					3.5¢/kWh

The financial impacts of the renewables component of the existing Incentives Package is around $25M in present value terms by 1994/95 and about $40M by the year 2000.

6.3 An Aggressive Or Medium Program?

The impact of proceeding with an Aggressive and a Medium program for Independent Generation has been examined. The Aggressive program is assumed to be implemented immediately in 1990/91 at an aggressive level, whereas the Medium program is one where its timing and level are matched more closely to the system needs. Under this Medium approach the initiative would follow on from the Existing Incentives Package in

BEST AVAILABLE DOCUMENT

1992/93 providing continuity with a minor increase in capability.

The assumed levels of capacity resulting from Aggressive and Medium programs are as shown in Table 6.4.

Table 6.4 Capacity Additions (MW)

YEAR	ADDITIONAL TO EXISTING INCENTIVES PACKAGE	
	MEDIUM PROGRAM (MW)	AGGRESSIVE PROGRAM (MW)
1990	0	0
1995	70	230
2000	120	410
2005	160	540
2010	200	660

Tables 6.5 and 6.6 show the different financial impacts of the Aggressive and Medium programs. There are substantial benefits (NPV of $240M at 8% real) to be achieved if the build up of generation is timed to coincide with system needs. However under both timings these programs could result in losses for the SECV until around 2005 to 2010.

The benefits achievable by the Medium program (a deferred approach) indicated above are, of course, valid only if the system supply/demand balance is as indicated in the scenarios. A substantial decrease in Latrobe Valley plant performance or increased electricity load such as additional smelter demand would advance the timing of new plant leading to increased marginal costs of supply. This would tend to advance the desirable timing of the independent generation initiative and potentially make it financially attractive.

BEST AVAILABLE DOCUMENT

Table 6.5 Impacts of Aggressive Program (SM)

STRATEGY	YEAR (Ending 30 June)			
	1995	2000	2005	2010
Revenue Loss	34	58	72	84
Buy Back Cost	41	69	87	101
Program/Incentive Cost	7	12	16	20
Sub-Total	82	139	175	205
Supply Cost Saved	28	78	165	202
Overall (Cost)/Benefit	(54)	(61)	(10)	(3)
NPV (Cost)/Benefit over 20 years				(319)
Subsidy over 20 years				1.7¢/kWh

Table 6.6 Impacts of Medium Program (SM)

STRATEGY	YEAR (Ending 30 June)			
	1995	2000	2005	2010
Revenue Loss	10	17	21	25
Buy Back Cost	12	21	26	31
Program/Incentive	1	1	2	2
Sub-Total	23	39	49	58
Supply Cost Saved	8	23	49	61
Overall (Cost)/Benefit	(15)	(16)	0	3
NPV (Cost)/Benefit over 20 years				(77)
Subsidy over 20 years				1.4¢/kWh

BEST AVAILABLE DOCUMENT

CHAPTER 7: PROGRAM TO THE MID 1990s

7.1 Targets For Independent Generation

As indicated in the Electricity Development Strategy and Implementation Review (December 1989), independent generation, particularly cogeneration, has the potential to be a cost competitive option for balancing supply and demand requirements in the longer term. For the independent generation industry to be a viable competitive alternative a certain level of growth is needed to ensure capability is maintained so that the SEC is positioned to undertake a more aggressive program in the mid to late 1990s.

As indicated in Chapter 6, a Medium program to encourage Independent Generators is expected to cost the SEC some $60M over the next 5 years. Based on a Medium program, it is proposed that the limits for additional Independent Generators be as shown in Table 7.1.

Table 7.1 Targets for Total Grid Connected Independent Generation

(Installed after December 1989)

FINANCIAL YEAR	CAPABILITY BY END OF YEAR MIN (MW)	MAX (MW)
1989/90	40	40
1990/91	65	80
1991/92	110	130
1992/93	155	180
1993/94	170	200
1994/95	190	220

Note: Includes Incentives Package

BEST AVAILABLE DOCUMENT

The maximum target level in Table 7.1 represents an average of about 40 MW growth over the next 5 years. Providing a price incentive based on long term avoided cost represents a considerable cost to the SEC over the next 5 years and therefore it is prudent to limit the growth to a conservative level, which could be reviewed if objectives are not being achieved.

The above limits for total grid connected independent generation will be revised and updated with sufficient lead time such that opportunities for independent generation are not pre-empted by decisions taken by the SEC for its future supply options. Revision of the limits would be included in each Electricity Development Strategy and Implementation Review.

In order to clearly define the application of this proposed Independent Generation Policy, the following dates will apply to the close off of the existing Incentives Package.

- Entry to the Cogeneration and Renewable Energy Incentives Package will close on 31 December 1990.
- Heads of Agreement are to be negotiated by 31 June 1991.
- Contracts are to be exchanged or completed by 31 December 1991.
- To receive the full incentives package, Cogeneration projects shall be operational within 18 months of signing a contract and Renewable projects within two years of signing a contract. Projects commencing beyond these dates shall receive a correspondingly reduced period in which incentives are applied.

Responsibility for any environmental, planning and/or works approval shall be the responsibility of the proponent of an independent generation project and not the responsibility of the SECV.

7.2 Program Elements

With the limits proposed for additional independent generation it is possible that these limits could be exceeded. If this were the case, it could be worthwhile to institute a bidding process or some like competitive process to ensure that the most appropriate projects are implemented. The following factors are proposed for consideration in determining which projects are encouraged and accepted into the program.

- **Limit Large Projects** - In view of the negotiations already underway through the existing Incentives Package and the target levels in Table 7.1, projects much larger than 50 MW could not be considered in the near future without closing out many other potential participants unless the expectations for supply/demand balance change markedly.
- **Limit Thermal Generation** - No new thermal generation should be accepted unless it is complementary to objectives of the Strategic Research Program to improve efficiency and reduce capital costs of coal fired plant or to develop technologies which use other fossil fuels.

BEST AVAILABLE DOCUMENT

- Diverse Demonstration - A diverse set of independent generation types could be encouraged. Diversity includes heat application (steam, direct, absorption cooling, etc), heat using institutions, cogeneration technology, and renewables and waste projects. Specific types of application could be targeted and bids sought and encouraged.

Other aspects that could also be worthwhile pursuing would be those that relate to ensuring the availability of independent generation, particularly cogeneration, in the long term. These aspects are as follows.

- Capture Lost Opportunities - It is desirable to avoid losing opportunities in new heat using facilities to be built in the 1990s. When new facilities are built, arrangements for easy conversion to cogeneration could be incorporated at a fairly low cost rather than a very expensive retrofit after building. Arrangements include space provisions for ultimate development, sufficient electrical and gas connections and boilers adaptable to waste heat recovery. Steps could be taken to ensure that these facilities are available for cogeneration conversion when needed. Each potential application would need to be evaluated and the potential cost and risk assessed. The benefits of capturing lost opportunities depend on the difference between initial and retrofit costs. The cost of the program element depends on how long the "lost opportunity" investment remains non-productive.

- Acquire Cogeneration Rights - Some industries may wish to proceed with cogeneration significantly before Victoria's need for a new power station. In some cases, it may be advantageous to acquire the cogeneration rights and forestall development until needed. The rights acquired should require the development of the cogeneration component when desired with the sanction that if development is then blocked, the payments would be refunded. Acquiring cogeneration rights would be less costly than allowing unnecessary cogeneration projects to proceed. Victoria and SECV customers would save the difference between the cost of power from existing stations and new cogeneration. Second, the cogeneration opportunity can ultimately be designed to serve grid needs and not be constrained to provide just on-site electricity.

7.3 Organisation

An important aspect to consider negotiating with the independent generation project proponents is the issue of whether the proponent is a customer for whom the generation project is substantially meeting their own electricity needs, or, the proponent is supplying a major component of the generation output to the SECV.

Each of these should have a different negotiating perspective, the former being primarily focused on satisfying the customer's energy service requirements, the latter on gaining the lowest price to the SECV and ensuring that the operation and maintenance requirements are integrated with the SECV's system needs.

BEST AVAILABLE DOCUMENT

However, it is also recognised that with the potential number of Small projects (up to 10 MW) it would not be structurally efficient to separate the activities in regard to these projects. Similar support activities, such as project analysis and contract negotiation are needed for cogeneration and thermal generation.

Therefore, the proposed organisational arrangements are as follows:

Small (0-10 MW)	Energy Services Department
Medium (10-50 MW)	Energy Services Department if the primary purpose is to meet the proponent's electricity needs; or
	System Control Department if the primary purpose is to supply the SECV.
Large (50 MW)>	Office of Strategic Planning

Power Grid Development Department would need to be involved in project negotiations that have a significant impact on the power grid. System Control Department would need to be involved in negotiations significantly affecting operational scheduling.

7.4 Strategy

The Independent Generation Strategy proposed by SECV is to set a five year target of 220 MW independent generation by 1994/95 including the Cogeneration and Renewable Energy Incentives Package and to review this target annually in view of developments in the prospective supply/demand balance. Buy-back pricing will be kept stable in line with industrial electricity prices and the long run outlook for supply costs.

In the event of the amount of independent generation exceeding the five year target:

- large projects would not be considered.
- thermal projects would only be considered if they contribute to technological development.
- the 220 MW capacity would be allocated to a number of projects to achieve diversity of independent generation technologies, and
- SECV would consider on a case by case basis payments to proponents to forestall development of cogeneration projects until needed.

However, proponents who wish to install generation plant to meet their own needs rather than sale to SECV should not be obstructed.

In the event of the amount of independent generation not achieving the five year target and the SECV system remaining close to supply/demand balance or heading for shortfall in supply:

BEST AVAILABLE DOCUMENT

56

- SECV would seek to develop the more economic projects to ensure that targets are achieved, and
- the annual review of buy-back rates would take into account any higher short term marginal generation costs associated with supply shortfall.

BEST AVAILABLE DOCUMENT

A1 - EXISTING INDEPENDENT GENERATION

There is currently 156.7 MW of electricity generation plant owned and operated by Victorian electricity users excluding Alcoa at Anglesea as shown in Table A1.1. Of this plant, 91.4 MW is not connected to the power grid. Also, the SECV has 170 MW of cogeneration plant at Morwell associated with briquette manufacture.

While there are a large number of additional plants committed as a result of the Incentives Package, only the Sirius Biotechnology and Thomson Dam projects and some expansion at Shell are operational as yet.

The Incentives Package was introduced in early 1987 as part of the Government's Economic Strategy to encourage:

- private sector investment in industrial projects which are energy intensive;
- efficient use of Victoria's energy resources; and
- the development of renewable energy resources.

These initiatives were aimed at gaining a number of demonstration plants in Victoria using a range of technologies in a number of different industries, and to provide some impetus to the private generation industry amongst engineering consultants, equipment suppliers and electricity consumers. The package provides favourable buy-back and stand-by conditions for plant with a capacity of no more than 10 MW with a maximum aggregate set at 150 MW.

The Package has created considerable interest in cogeneration and renewables over the past 2 years.

BEST AVAILABLE DOCUMENT

Table A1.1 Existing Independent Generation

COMPANY	MW INSTALLED	TYPE
CONNECTED TO GRID		
APM, Fairfield and Maryvale	46.0	Cogen
Cadbury Schweppes, Ringwood	2.9	Cogen
CIG, Dandenong	1.7	Cogen
Kodak, Coburg	1.5	Cogen
Phosphate Co-op, Geelong & Portland	7.4	Cogen
Shell, Geelong (*)	17.5	Cogen
Sirius Biotechnology Altona (*)	1.1	Cogen
TAB, South Melbourne	1.0	Cogen
MMBW, Carrum	6.0	Waste
MMBW, Thomson Dam (*)	6.3	Renew
Sub-Total	91.4	
NOT CONNECTED TO GRID		
Smorgans, Tottenham	27.0	Cogen
Esso, Longford (*)	32.0	Cogen
BHP House, Melbourne	6.3	Cogen
Sub-Total	65.3	
TOTAL	156.7	

(*)
Included in Cogeneration and Renewables Incentives Package:

Shell Geelong	5.5 MW	
MMBW Thompson	6.3 MW	
Sirus Biotech	1.1 MW	
Esso Longford	9.0 MW	Grid connect part of existing 32 MW

BEST AVAILABLE DOCUMENT

59

A2 - PERFORMANCE STANDARDS

The pricing of peak period buy-back electricity should depend on the attainment of targeted performance. The maximum price should only be given when performance targets over a year or parts thereof are achieved. Generation below target should involve some penalty by reducing the buy-back price. Generation significantly above target should not receive the maximum price because it could result in off-loading of SECV generation plant rather than contribute to supply/demand balance.

No special requirements need to be placed on the buy-back price of off-peak electricity provided the off-peak period is defined so that additional purchased generation in that period does not affect system reliability significantly.

Standards need to be established for power grid performance relating to such matters as voltage control, reactive power generation and dynamic performance.

A2.1 Standby Arrangements

Standby provisions would be included in all contracts where customer load would be supplied when the generation source is out of service. This would be the means to monitor development of customer load separately from the generation contract.

For projects subject to performance specifications, it would be permissible for the proponent to increase electricity consumption and reduce export to the power grid in the same way that an ordinary customer without generation could increase supply. This would not be regarded as failure to meet performance specifications. For this reason, performance can be assessed on the basis of energy supplied to the SECV, or, on the basis of the total generator output.

In order to allow for variations in customer load and to monitor performance against standards, separate metering would be required for load and generation energies. It would not be sufficient to measure net export to assess whether or not performance standards have been met. Further consideration is needed on a practical approach to this problem.

A2.2 Small & Medium Projects (Excl. Renewable)

Small and Medium scale projects using fossil or waste fuel that are to be subject to performance standards would be assessed over a calendar year on the basis of energy

BEST AVAILABLE DOCUMENT

generated in the peak period compared to targets established during negotiations. The total annual payment would be adjusted in the June payment each year to reflect annual performance. Capacity obligations would not be imposed.

The average annual peak period buy-back price based on a firm price of F ¢/kWh would be as detailed in Table A2.1.

Table A2.1 Average Annual Peak Period Buy-back Price - Medium Projects

(Excluding Renewable)

PERFORMANCE LEVEL (% of Target)	BASIS RELATIVE TO FIRM PEAK BUY-BACK (F)
up to 75%	Price based on non-firm peak buy-back rate (N).
75-95%	Price for all energy rises linearly with performance in the range from N ¢/kWh at 75% to F ¢/kWh at 95%.
95-105%	Firm buy-back price for all energy - F ¢/kWh.
above 105%	Firm buy-back price for energy to 105% of target. Additional energy above the 105% target level priced at short term energy rates (S), usually gas. In most years S=N.

The target energy level needs to be specified in advance with a lead time of 5 years. If a broader band at the firm peak rate (F) is desired, proponents can offer to accept a lower buy-back price in return for less stringent performance specifications. This might be useful when generation from year to year is likely to be highly variable on a short lead time.

Contracts could specify a minimum non-firm rate (N) escalated according to the firm rate (F), but in years when excess generation is available on the main system, N could be temporarily increased, S reduced and the 75% break point reduced to encourage lower levels of generation. The value of S would be declared by System Control Department at the commencement of each quarter and there would be no guaranteed minimum value for S.

Payments would be structured as a fixed monthly payment plus an energy payment. The monthly payment would be

$$S\ 100\ (F - N)\ E / 12 + N \cdot e$$

BEST AVAILABLE DOCUMENT

61

where E = is the energy (kWh) sold to SECV in the previous financial year or the equivalent annual budget for the first year of operation: and

e = is the monthly energy sold to SECV.

The payment for June would be adjusted to reflect the overall annual payment for electricity purchased in accordance with the formulation above based on actual annual performance of the generation plant. Where only a portion of the electricity generated is sold to SECV, E in the above formula would be the energy sold not the energy generated.

A2.3 Small and Medium Projects - Renewable

The performance definition above would not be generally appropriate for renewable energy projects based on hydro or wind because the energy yield is unpredictable and can vary greatly from year to year. To some extent there would be some diversity between renewable resources distributed around the state and it could be argued that a less stringent energy requirement would be acceptable for each project. Alternatively, the performance requirement could relate to availability of generating plant rather than energy generated.

The concept adopted is to provide a wider margin for annual energy for renewable projects and to offer make-up provisions.

The buy-back price would reflect actual performance over the year in the peak period and an adjustment payment would be made after the end of the calendar year as appropriate. The structure of the buy-back price based on a firm price of F c/kWh would be as shown in Table A2.2.

Table A2.2 Average Annual Peak Period Buy-back Price - Medium Renewable Projects

PERFORMANCE LEVEL % of Target	BASIS RELATIVE TO FIRM PEAK BUY-BACK (F)
up to 45%	Price based on non-firm peak buy-back rate (N).
45-85%	Price for all energy rises linearly with performance in the range from N ¢/kWh at 45%, to F ¢/kWh at 85%.
85-115%	Firm buy-back price for all energy = F ¢/kWh.
above 115%	Firm buy-back price for energy to 115% of target. Additional energy above the 115% target level priced at short term energy rates (S), usually gas. In most years S=N.

BEST AVAILABLE DOCUMENT

The target energy level is to be specified in advance with a lead time of 5 years. If a broader band at the F price is desired, proponents can offer to accept a lower buy-back price in return for less stringent performance specifications. This might be useful when generation from year to year is likely to be highly variable.

Contracts could specify a minimum N escalated according to F, but in years when excess generation is available on the main system, N could be temporarily increased, S reduced and the 45% break point reduced to minimise the penalty for lower levels of energy available. There would be no guaranteed minimum value for S.

Some make up provisions would be appropriate where target energy is not achieved because of low renewable energy available. Energy generated above 115% of target would be recorded and could be used to temporarily reduce the target in the following year if needed to reduce penalties on the low side of the target. Further consideration of this matter is needed in relation to expected yields of various classes of renewable energy.

Monthly payments would be structured as for non-renewable projects with make up provisions adjusted in the payment for June.

A2.4 Large Projects

Large scale projects above 50 MW would be scheduled for operation and maintenance by System Control and therefore performance would be assessed on available energy and capacity in the peak period rather than energy generated. Available capacity would be evaluated by assessing available energy on a half hour basis. Failure to deliver according to schedule would have penalties as for medium projects.

The payment structure would consist of the following components:

SA	An annual dollar sum paid in 12 monthly instalments representing the value of the target availability in accordance with the negotiated performance standard based on a negotiated capital and fixed operating costs component of the peak buy-back rate (F). The amount SA would represent the minimum payment to the proponent. Half of the capital component would be in fixed dollars and half would escalate with CPI or average industrial electricity prices.
+V c/kWh	For energy actually generated within the System Control schedule based on the annual performance target including negotiated allowance for scheduling of maintenance. The value of V would reflect the negotiated variable energy component of the buy-back rate (F). If target performance is achieved, the average buy-back price would correspond to the negotiated value.
+S c/kWh	For any excess energy component above the System Control Schedule. This allows for the proponent to generate additional electricity if it would serve the proponent's needs for heat or revenue but it would have

BEST AVAILABLE DOCUMENT

a reduced value to SECV. S would be declared at the commencement of each quarter by System Control Department, and would be the same value as applies to the Medium size projects.

-P c/kWh — A penalty for energy requested by System Control on a half hour basis but not provided. P would be declared at the commencement of each quarter by System Control Department, but, the maximum discount under P would be specified within the performance standard. The penalty would be such that the average buy-back rate did not fall below a guaranteed minimum non-firm rate (N) as for medium scale projects.

Price components A and V would be negotiated as part of the agreement whereas components S and P would be declared in advance by System Control on a quarterly basis depending on prevailing system conditions. The contract would specify a maximum P and a minimum N.

Special requirements of proponents in relation to performance specifications and take or pay provisions would be negotiated if requested. This would be particularly relevant if any large scale cogeneration or renewable energy projects were considered.

A2.5 Liquidated Damages

As there are no performance requirements for small projects, the concept of liquidated damages is not relevant.

Liquidated damages for major breaches or premature termination of contracts for medium and large scale projects would need to be related to the short term consequences in the particular situation. The SECV would need to quantify the expected consequences with reference to change in system operation given the sudden loss of generating capability.

BEST AVAILABLE DOCUMENT

TAB 3

Costa Rica:

- **Law No. 7200 Authorizing Autonomous or Parallel Electricity Production**
- **Decree No. 20346 - MIRENEM (Regulations)**

BEST AVAILABLE DOCUMENT

Law No. 7200

October 18, 1990

THE LEGISLATIVE ASSEMBLY OF THE REPUBLIC OF COSTA RICA
DECREES:
LAW THAT AUTHORIZES AUTONOMOUS OR PARALLEL ELECTRICITY PRODUCTION

Article 1.

Autonomous or parallel generation is defined as the electrical power produced by electric plants of limited capacity, owned by private enterprises and rural electrification cooperatives which can be integrated into the National Electric System.

Article 2.

Plants of limited capacity are defined as hydropower plants, and those that use non-conventional energy sources, which do not surpass 20,000 KW.

Article 3.

It is declared to be in the public interest for the ICE to purchase electricity from rural electric cooperatives, and those private enterprises in which at least 65% of the equity capital belongs to Costa Rican citizens, that have established central electrical plants of limited capacity for the exploitation of small-scale hydropower potential, and also from non-conventional sources of energy as long as these have previously not been part of the national electrical system.

Article 4.

Conventional sources of energy are defined as all those that utilize hydrocarbons, mineral coal, or water power as their basic elements.

Article 5.

The National Electricity Service (SNE) will have the right to grant concessions for the development of electric plants of limited capacity up to a maximum of 20,000 KW, and for a time period not exceeding 15 years. The SNE will have the right to make extensions, modifications, or transfers without requiring legislative authorization. However, legislative authorization is required when the operation surpasses the 20,000 KW limit, or when it is less than 20,000 KW and the party has other approved concessions which, with the additional capacity, surpasses said quantity.

What has been established in the preceding paragraph in reference to the limit of kilowatts will also be applied to concessions granted to individuals or organizations not included in Articles 1 and 2 of this law.

BEST AVAILABLE DOCUMENT

Article 6.

To grant a concession to develop an electrical plant of limited capacity, the National Electricity Service, in addition to what has been stipulated in Law 258 of the 18th of August of 1941, shall require a declaration of eligibility granted by the Costa Rican Electricity Institute. Such declaration of eligibility must be provided within a time period not exceeding 120 days from the day of application.

Article 7.

The ICE is authorized to declare a project eligible for the development of an electrical plant of limited capacity as long as the potential for independent generation does not exceed fifteen percent of the combined power of the electric plants of the national electric system. Moreover, ICE may refuse applications that will interfere with project(s) or concession(s) which have already been granted or are being processed.

Article 8.

In addition to an declaration of eligibility to which Article 6 refers, with regard to electrical plants of limited capacity larger or equal to 2,000 KW, the interested party should present to the National Electricity Service a certification of approval of an environmental impact assessment conducted by an expert in the field, which should be presented to MIRENEM for approval or refusal within sixty (60) days from the time of its presentation.

Article 9.

The final decision made by the Department of ICE in charge of the declaration of eligibility, and the Department of MIRENEM in charge of the environmental impact assessment, can be appealed through the respective higher authority within fifteen days after their notification.

Article 10.

The environmental impact assessment, to which Article 8 of this law refers, will include at a minimum the following:

a) Indication of the possible impact by the project on the natural and human environment.
b) The unavoidable adverse effects if the activity is carried out.
c) The long-term effects on the flora and fauna, pointing out the effects on the vegetation, soil, animals, and the quality of the water and air.
   cb) Determination of specific areas that will suffer deforestation, if that is the case.
d) Quantity of possible waste materials generated.
e) Effects on population and human settlement.
f) Programs for reforestation, control of soil erosion, control of water and air contamination, and plans for waste handling.
g) Contingency plans to prevent, detect and control adverse effects on the ecosystem.

BEST AVAILABLE DOCUMENT

Article 11.

To ensure the accomplishment of the programs of control and environmental recuperation, the grantee should submit, with the provisional contract, an unconditional performance bond in favor of MIRENEM, equivalent to four percent of the project's value during the period of its construction, which will be held in force for a period of one year from the time the project begins operations. Said guarantee will be reduced to an amount equivalent to one per cent of the project's value and will be held in force during the period of the concession. These percentages can be adjusted by MIRENEM in accordance with the amount of potential damages that will be determined by the environmental impact assessment. This guarantee should be issued by any of the banks of the National Banking System or by the National Insurance Institute to MIRENEM's satisfaction, and this guarantee may be exercised partially or totally by the abovementioned ministry, as soon as it is shown that damage has occurred and that the damage has not been mitigated by the operator. MIRENEM can carry out directly and officially or through contract corrections to any environmental deterioration or damage that may originate in relation to a granted electrical concession. If at the end of the concession the guarantee has not been exercised, it will be returned partially or totally, whatever the case may be.

Article 12.

It is MIRENEM's responsibility to establish any rules and conditions necessary to protect the fulfillment of the program of environmental control and recuperation of the electrical plants of limited capacity. In case that the concessionaires do not adhere to the conditions established by MIRENEM, the National Electricity Service, at the request of MIRENEM, may terminate the concession.

Article 13.

The Costa Rican Electricity Institute will be authorized to enter into contracts for the purchase of electric power, as part of its normal activities, which should be ratified by the SNE in accordance with the terms of Law No. 258 of the 18th of August, 1941.

Article 14.

The tariffs for the purchase of electric power by ICE require establishment of a fixed price on the part of the National Electricity Service, which prior to the issue of a final decision will solicit the opinion of the affected concessions.

ICE will apply for tariff modifications on each occassion and these should be the most favorable to the public consumer, within the principle of avoided capital and operation costs of the interconnected national System using national economic criteria. Periodic adjustments of tariffs included in the buy and sale contract will take into account the usual cost variables of monetary devaluation, local inflation, and other contingencies, and these adjustments will be executed by an automatic formula established by the National Electricity Service. These adjustments and prices do not require the approval of the Executive Branch. The structure of prices will consider the characteristics of energy supply by electric plants of limited capacity.

BEST AVAILABLE DOCUMENT

Article 15.

The electricity purchased will be the surplus that the producer has at a measured point after having supplied his own necessities.

Article 16.

The Central Bank has the authority to exceed the maximum limit of credit in the case of loans granted by commercial banks for the development of selected industries and to those who are interested in manufacturing the electromechanical equipment necessary for electricity plants of limited capacity. To this end, those transactions will be exempt from the terms set forth in Article 61, Clause 5 of the Organic Law of the National Banking System and Article 85, clause 1, part b, of the Organic Law of the Central Bank of Costa Rica.

Article 17.

Private enterprises and rural electrification cooperatives, producers of autonomous or parallel electrical power, will enjoy the same exemptions as the Costa Rican Electricity Institute on the importation of machinery and equipment for the conveyance of water, and to generate, control, regulate, transform and transmit electrical power.

Article 18.

Private enterprises and rural electrification cooperatives that supply electricity to the Costa Rican Electricity Institute in accordance with what has been established in this law can seek protection under Article 7, clause 2 of annex 3, Law of Industrial Production Incentives of Law 7017 of the 16th of December, 1985.

Article 19.

Private enterprises and rural electric cooperatives that supply electricity to the Costa Rican Electricity Institute in accordance to what has been established in this law can deduct losses from gross revenues, in the same manner as industrial enterprises do in accordance with the terms of clause g of Article 8 of Law 7092 of the 21st of April, 1988, Law of Taxable Revenue.

Article 20.

For the purposes of this law, private enterprises are defined as those to which Article 3 of this law refers.

Article 21.

Repeal Article 22 of Law 7131 of the 16th of August, 1989 (Special Budget of May 1989) and Article 7, of Law 258, of August 18, 1941 (Law of the National Electricity Service).

Article 22.

The Executive Branch will [prepare regulations implementing] regulate the present law within three months of its publication. The lack of regulation will not obstruct the application of the law.

BEST AVAILABLE DOCUMENT

Article 23.

To be effective from the date of publication.

Sole Transitory - Solicitations for electricity concessions pending legislative approval will be governed by that established in Article 5 of the present law.

BEST AVAILABLE DOCUMENT

DECREE
N° 20346-MIRENEM

THE PRESIDENT OF THE REPUBLIC AND THE MINISTER OF NATURAL RESOURCES, ENERGY AND MINES

On the basis of the powers that Article 140, sections 3) and 13) of the Constitution, as well as Article 23 of Law N° 7200, published in the Gazette N° 197 of 18 October 1990, confer upon them

DECREE:

The following

Regulations under the Law that authorizes Autonomous or Parallel Electricity Generation

Article 1.
These regulations establish the requirements and procedures that will regulate the activity of autonomous or parallel electricity generation, under provisions of Law N° 7200.

Article 2.
In applying these regulations the following will be understood:

Committed capacity or committed power:
The power in kW that the private producer places at the disposal of the Costa Rican Electricity Institute, after satisfying his own needs.

Nominal capacity or nominal power:
The maximum amount of power which is attributed to a plant on the basis of its nameplate capacity or on a technical estimate.

Concession:
Administrative act issued by the National Electricity Service for the operation of electrical stations of limited capacity and transmission and distribution systems.

Rural electrification cooperatives:
Associated companies which render electricity and public lighting services in the rural zone.

Maintenance and operations costs:
The fixed and variable costs of labor, spare parts, fuels (when they are not separately indicated) lubricants and other expenses associated with the operation of the SNI.

BEST AVAILABLE DOCUMENT

Distribution company:
The body which supplies the electrical service to a given region.

Private companies:
Those companies in which at least 65% of their corporate capital belongs to Costa Ricans.

EIA:
Study of Environmental Impact

Conventional sources of energy:
All those which utilize as a basic element hydrocarbons, mineral carbon (coal) or water (hydropower).

Plants that form part of the National Electrical System:
Those generator plants which at the date of publication of Law N° 2000 (18 October 1990), were supplying energy to the public electricity system.

Viability or feasibility report:
Report in which the basic characteristics are listed and the technical, economic and financial studies are described that demonstrate that a project is capable of fulfillment.

ICE:
Instituto Costarricense de Electricidad [Costa Rican Electricity Institute]

MIRENEM:
Ministry of Natural Resources, Energy and Mines.

Private producer:
A private company or rural electrification cooperative that possesses and operates electrical stations of limited capacity for exploitation of small-scale hydropower potential and from non-conventional energy sources.

Energy resource:
The source of energy authorized to the private producer for generating electricity.

SNE:
Servicio Nacional de Electricidad [National Electricity Service]

SEN:
The complex of stations, substations and transmission and distribution networks that are devoted to the production, transmission and distribution of electrical energy.

National Interconnected System (SNI):
The components of the SEN which are interconnected among themselves.

BEST AVAILABLE DOCUMENT

Eligibility:

Prior issuance to the firm of a declaration [of eligibility] from the ICE, in the case of a proposal by an party interested in developing an electrical plant for the purpose of providing it [ICE] with electricity, indicating that the said proposal meets the requirements of the law and the ICE, and consequently to continue with the negotiations for concluding an agreement.

Useful life:

Period of normal functioning of a plant, in accordance with the estimated life of the equipment, civil engineering works and existence of the primary resource utilized in the production of electricity.

Article 3.

Any application before the ICE to obtain a declaration of eligibility must be accompanied by the following documentation:

I. If the applicant is a private company:

a) Certifications of authorized and subscribed corporate capital, including the number of shares outstanding and of the roster of partners holding shares, and a copy of the constituting document of the corporation. For this purpose the documentation in question must be issued by a notary or an authorized public accountant. This last procedure will also be followed for certifications of general or limited authorities (said documentation must be updated prior to the signature of the contract.)

b) Certification of the legal authority of the signatory of the application, indicating the capacity in which he is acting.

c) Legal domicile of the applicant.

ch) Detailed demonstration of the financial capacity of the company, including as a minimum,

In case of a new company:
- Beginning financial statement
- Technical advisory personnel
- Means of financing the project.

In case of a consolidated company:
- Company financial statements, duly certified by an authorized public accountant.

BEST AVAILABLE DOCUMENT

II. In case the applicant is a electrification cooperative.

a) Certification of the legal authority of the signatory of the application.
b) Legal domicile of the applicant.
c) Detailed demonstration of the financial capacity of the cooperative, including as a minimum:

In case of a new cooperative:
- Beginning financial statement
- Technical advisory personnel
- Means of financing the project.

In case of a consolidated cooperative:
- Financial statements of the cooperative, duly certified by an authorized public accountant.

Article 4.

In the case of projects for stations of limited capacity of less than 2,000 kW, the application for declaration of eligibility must also be accompanied by what is provided in the previous article, along with the following minimum information, which must be supported by professionals in the area of each of the specialties, whose signature will witness the veracity of the data provided.

a) Name of the river and other streams to be utilized.
b) Outline of the project in complete original maps or legible copy from the National Institute of Geography (IGN) on a scale of 1:50,000, indicating location of the elevations of the dam and the discharge from the machine house, in meters above seas level (m.s.n.m).
c) Estimated average annual production of the plant and energy offered to the ICE (kW).
ch) Nominal power of the plant and power offered to the ICE (kW).
d) The designed flow in cubic meters per second.
e) Average monthly flows of the streams, in cubic meters per second.
f) Report of calculation of power and energy obtainable
g) Indication on original map or legible IGN copy, scale 1:50,000 of proposed interconnection to the SNI and associated substation.
h) Estimate of the cost of the project and description of planned method for financing a hundred percent of it.

Article 5.

In the case of projects for stations of limited capacity with power of 2,000 kW or greater, the application for declaration of eligibility must be accompanied by, in addition to what is provided in Article 3, the following documentation as a minimum, which must be supported by professionals in the area, in one of the specialties, whose signature must

BEST AVAILABLE DOCUMENT

testify to the data consigned:

a) Name of the river and other streams to be utilized.
b) Sketch of the project indicating the geographic site and general location of the works, on complete original maps or clear copy from the IGN, 1:50,000 scale.
c) Individual diagrams of the principal works, indicating estimated dimensions .
ch) Elevation of the dam and of the discharge from the machine house, in meters above sea level.
d) Designed flow in cubic meters per second.
e) Average monthly flows of the streams in cubic meters per second.
f) Estimated average annual energy of the plant and energy offered to the ICE.
g) Nominal power of the plant and power offered to the ICE (kW).
h) Report of calculation for power and energy obtainable
i) Sketch of the access roads to the project.
j) Indication on original map or clear IGN copy, scale 1:50,000, and associated substation.
k) Estimate of the cost of the project and description of the planned strategy for financing one hundred percent of it.

Article 6.

For station projects which utilize unconventional energy sources, the application for declaration of eligibility must be accompanied by the items indicated in Article 3, with the following information as a minimum, which must be supported by professionals in the field in each one of the specialties, whose signature will testify to the veracity of the data consigned.

a) Primary source of energy and technology to be utilized, with demonstration of the existence of the energy supply.
b) Sketch of the project indicating geographic site and general location of the principal works, on complete original maps or legible IGN copies, on 1:50,000 scale.
c) General diagram of the project and individual diagrams of the principal works, indicating estimated dimensions.
ch) Estimated average annual energy of the plant and energy offered to the ICE.
d) Nominal power of the plant and power offered to the ICE (kW).
e) Report of calculation for power and energy obtainable.
f) Sketch of the project's access roads.
g) Indication on complete original map or legible IGN copy, on 1:50,000 scale, of the proposed interconnection line to the SNI and the associated substation.
h) Estimate of the project costs and description of the strategy proposed for financing one hundred percent of it.

Article 7.

Within the period of 120 days from the receipt of the application, the ICE must issue a

BEST AVAILABLE DOCUMENT

declaration of eligibility, indicating the effective period of same, which may not be greater than one year, the clauses and the requirements of interconnection, as well as the location and voltage of the connection. The declaration of eligibility may be revoked automatically if it is determined that the documentation submitted for consideration included false or erroneous data. In exceptional cases, duly justified, the ICE may extend the eligibility up to one more year in order to satisfy requirements which may be pending at its expiration.

Article 8.

The ICE will reject applications for eligibility when:

a) The documentation and information required are incomplete.
b) The proportion of corporate capital of the applicant company belonging to Costa Ricans, is less than sixty-five percent of the total.
c) In the a case of electrical stations which are part of the National Electrical System.
ch) It refers to projects for stations which utilize conventional energy sources, with the exception of those established in Article 3 of the Law N° 7200.
d) It interferes with any prior project for which the declaration of eligibility or granting of concession is in process, or which has been granted, or which negatively affects any project contemplated by the ICE in its development plans.
e) They are projects which exceed the limit of 20,000 kW of capacity set for the same private producer in one or more concessions.
f) The committed capacity of the sum of contracts subscribed and of eligibilities reach the limit corresponding to fifteen percent (15%) of the nominal capacity of the total stations which comprise the National Electrical System at the time the application is received.

Article 9.

Once the declaration of eligibility is obtained, the interested party must periodically keep the ICE informed, in writing, with regard to compliance with the other requirements of the project, as well as obtaining the concession, the technical advisors, the financing, and all the relevant aspects that enable the latter to know the current status of the project.

Article 10.

Decisions of the ICE in the area of its competency will be possible to appeal before the higher authorities of the Institution, which must make resolution within the periods indicated for that purpose in the General Public Administration Law.

Article 11.

In order to enter into a contract for sale of energy to the ICE, all private companies or cooperatives for rural electrification must have in force: the declaration of eligibility granted by the ICE and the respective concession granted by the SNE.

Article 12.

Prior to submitting the application for concession to the SNE, the interested party must

BEST AVAILABLE DOCUMENT

obtain the approval of the EIA on the part of MIRENEM. For these purposes it must submit the said study for its [MIRENEM's] respective evaluation, which must be produced within a period no longer than 60 calendar after its receipt.

The EIA must contain:

1) Description of the project.
2) The direct and indirect impact on the natural and human surroundings.
3) Inevitable adverse effects if the activity is carried out.
4) Physical, biotic and human analysis, to include:
   - Effects on the vegetation and area to be cleared.
   - Effects on the soils and erosion control programs.
   - Effects on the quality of the water and contamination control programs.
   - Effects on populations and human settlements.
5) Quantities of wastes produced and management plans.
6) Measures for mitigation and contingency plans to prevent, detect and control the harmful effects on the river and land ecosystems.
7) The protection zone establishment program in hydrographic basins and in the areas surrounding the installations for generation and transmission of the stations of limited capacity that minimize adverse effects on the natural resources and the environment in general.
8) Effects on the archeological and cultural heritage.
9) Possibilities for achieving the greatest benefit at the minimum risk.
10) Adverse effects on economic and social activities.

The decision of MIRENEM will be possible to appeal before the Ministry, which must be resolved within the periods established for that purpose in the General Public Administration Law.

Article 13.

Prior to executing, partially or totally, the guarantee of compliance to which Article 11 of Law N° 7200 refers, MIRENEM will arrange, once only, for the private producer to correct or mitigate the damage caused within a reasonable span of time which it will grant for the purpose.

Article 14.

The procedure for obtaining an electrical concession will be conducted before the Water Authority of the National Electricity Service in accordance with the following provisions:

1) Exception from the application of Articles 28, 29, 30, 32 and 34 of the Executive Decree N° 16989-MIEM will be made for applications for concession for the development of waterpower or generation of electrical energy.

BEST AVAILABLE DOCUMENT

2) The application must contain:

a) Name, address and capacity of the applicant.
b) If the application is submitted by a representative of minors, disabled persons, judicial persons or by means of a representative or agent, it must be accompanied by the document which accredits such representations.
c) Uses to which the energy produced will be put, listing how much power it will utilize for its own consumption and how much for sales to the Costa Rican Electricity Institute (ICE).
ch) For hydropower stations:

i) Name of the stream from which the water will drawn.
ii) Amount of water that will be utilized, expressed in cubic meters per second or in liters per second and its total fall in meters.
iii) The theoretical capacity it is undertaken to obtain.

d) For stations which will utilize unconventional energy sources:
i) Theoretical capacity it is undertaken to obtain.
ii) Details of the source of energy.

e) If requested, there must be added:
i) If the energy is for sale to the ICE, the eligibility charter approved by the ICE.
ii) Certificate from MIRENEM approving the environmental impact study, in the case of stations producing more than 2,000 kW.
iii) Report of calculation of capacity and energy to be obtained.
iv) Sketch of the project, in original maps or legible IGN copy on scale of 1:50,000, showing the geographic location of the project and the location of the works.
v) If the plant to be installed is hydroelectric, adding: hydrological studies which serve as the basis for the project, indicating, among other things, the designed flow and the average monthly flows of the stream.
vi) For unconventional energy stations adding besides what is indicated in sections i), ii), iii) and iv), an explanatory document on the technology to be utilized and the existence of the energy source.

3) The technical information must be supported by a professional in the field, whose signature will testify to the veracity of the data presented.

4) When the application has been admitted an edict will be published in "The Gazette" three consecutive times, to the effect that persons who believe themselves to be injured by the concession may state, within the span of one month as of the date of first publication, the grounds and the bases that they may have for opposing the concession applied for.

BEST AVAILABLE DOCUMENT

5) When the term indicated in the previous section has expired the Water Authority will study the application and will remit to the Board of Directors of the National Electricity Service its recommendation regarding the application for its final decision. The said decision will be issued within 120 calendar days as of the initial submission of the application. In case objections are submitted, these will be resolved at the time the final ruling is handed down.

Article 15.

As a prerequisite to the signing of the contract for sale of energy to the ICE, the producer must have the feasibility report on the project approved by the ICE, have obtained the respective concession from the National Electricity Service, have satisfied the requirements which may have been requested in the declaration of eligibility and have updated the documentation indicated in Articles 3, 4, 5 and 6, as they may correspond.

Once the contract is signed, it will be remitted by the ICE to the SNE for ratification.

During the lifetime of the contract, the private producer will supply to the ICE annually the certifications indicated in Article 3, numbers I and II, sections a) as they may correspond.

The ICE may reject the feasibility report on the basis of reasons, consequently not signing the contract for purchase of energy, if the said report should reveal significant negative changes not originally accepted by the ICE.

Article 16.

For hydraulic stations of less than 2,000 kW, the feasibility report on the project must contain as a minimum the following information, which must be supported by professionals in the field in each one of the specialties, whose signatures will testify to the veracity of the data consigned:

a) Summary of the project
b) Name of the river and other streams to be utilized.
c) Estimate of average monthly output from January to December, produced by the plant and to be supplied to the ICE (kW).
ch) Nominal power of the plant and power offered to the ICE (kW).
d) Designed flow, in cubic meters per second.
e) Estimate of monthly average flows of the streams, from January to December, in cubic meters per second, for years of average hydraulic volume.
f) General diagram of the project (view of the plant and profile) on the basis of complete original pages or legible IGN copies, on the scale of 1:50,000 or on others of greater detail.
g) Individual plans of the works indicating dimensions (m) and elevations (meters above sea level) on detailed topographic charts of the site.
h) Supply of hydrological information utilized for the design of the works.

BEST AVAILABLE DOCUMENT

i) Preliminary design of the interconnection line and the associated substation, with location from the powerhouse to the point of linkage with the SNI, in accordance with standards indicated by the ICE.
j) Estimate of the total cost of the project and the economic and financial profitability thereof and its financing plan.
k) Works execution schedule.

Article 17.

For hydraulic stations whose capacities are equal to or greater than 2,000 kW the feasibility report of the project should contain, as a minimum, the following information, which must be supported by professionals in the field in each one of the specialties, whose signatures will testify to the veracity of the data consigned:

a) Summary of the project.
b) Name of the river and other streams to be utilized.
c) General plan of the project (views of plant and profile), based on original maps of clear IGN copies, on the scale of 1:50,000 and topography of the field in detail.
ch) Geological and geotechnical studies of the works sites, especially for the design of the dam, conduction and machine house works.
d) Hydrological support study, including an estimate of the designed flood, in cubic meters per second.
e) Estimate of the monthly flows of the streams from January to December in cubic meters per second for years of average hydraulic volume.
f) Estimate of average annual and monthly output from January to December, produced by the plant and to be supplied to the ICE (kWh).
g) Nominal power of the plant and power offered to the ICE (kW) in addition to estimated efficiencies of the turbo-generator equipment.
h) Usable volume of the dam basins, if there are any.
i) Preliminary design of the transmission line and associated substation, with location from the power house to the point of linkage with the SNI, in accordance with standards indicated by the ICE.
j) Breakdown of project costs and economic and financial profitability study of same and its financing plan.
k) Works execution schedule.

Article 18.

For stations with unconventional energy sources, the feasibility report of the project must contain, as a minimum, the following information, which must be supported by professionals in the field of each one of the specialties, whose signatures will testify to the veracity of the data consigned.

a) Summary of the project and description of the plant's operation.
b) Primary source of energy to be utilized and demonstration of the existence of the

BEST AVAILABLE DOCUMENT

resource during the whole economic life of the project.

c) General plan of the project (view of plant and profile) based on original maps or legible IGN copies, on the scale of 1:50,000 and topography of the field in detail.

ch) Estimate of average annual and monthly output, from January to December, produced by the plant and to be supplied to the ICE (kWh).

d) Nominal capacity of the plant and capacity offered to the ICE (kW), in addition to the efficiencies of the turbo-generator equipment.

e) Preliminary design of the transmission line and associated substation, with location from the power house to the point of linkage with the SNI, in accordance with the standards indicated by the ICE.

f) Breakdown of project costs and economic and financial profitability study and its expansion plan.

g) Works execution schedule.

Article 19.

The energy to be purchased by the ICE will be the surplus which the producer may have at the points of measurement, after supplying his own needs; it being necessary to clarify that for no reason will the private producer buy electricity from the ICE or the distributor company and simultaneously sell [them] his output. In general, for this purpose, the interconnection between the installations of the private producer and of the SNI will be done by means of one junction, in such a way that it serves to conduct both the energy which it consumes in its capacity as a user, and that which it produces in its capacity as a private producer. However, if due to particular circumstances there should be more than one point of measurement, the difference will be effected from readings corresponding to the conditions as buyer and seller, according to the different rate periods established for the purchase of energy by the ICE.

In cases where the points of consumption and generation of the private producer are far from each other, and the private electrical connection to obtain a single point of delivery and receipt is no feasible, the public network may be used as long as there has been a prior written agreement between the parties.

If the private producer's installations are located in an area served by another distributing company, the interconnection, if feasible and by means of an agreement between the ICE and the distributing company, it will be done at some circuit of said company, in such a case an additional point of electricity delivery on the part of the ICE to said distributing company being constituted.

The private producer must construct as part of his generation project the line or lines of interconnection as far as the point or points of the public network indicated by the ICE. It is the responsibility of the ICE in turn to make the existing national electrical system adequate in such a way as to allow receiving the power and energy to be delivered by the private producer.

BEST AVAILABLE DOCUMENT

Article 20.

The ICE will submit in October of each year for approval by the SNE, the rates for the purchase of energy from the private producers that will apply in the following year. The SNE, once the rates are adopted by its board of directors, but before they become firm, will inform the affected concessionaires, who must state their decision in writing within a period of 15 days. After that time the SNE will adopt the final decision and will order its publication in "The Gazette".

Article 21.

The rates will be based on the principle of achieving the greatest economic benefit for the country in general and for the final consumers in particular. For that purpose the purchase price will not be greater than the cost of production of one supplementary kilowatt-hour (kWh) -- also called marginal cost -- that would be required to be produced if the production of the private producers was not available.

Article 22.

The annual calculation of the rates will be on the basis of an analysis of future operating, maintenance and investment costs of the SNI, which are obtained from the economic optimization of the expansion plan for the electrical generation of the country. These costs will be updated to prices at the end of the immediately previous year to the one in which the new rates will apply.

Article 23.

In order to maximize the economic benefits for the country, the rates may have a disaggregate structure for seasons of the year, times of day, energy and capacity, which will be defined according to the future evolution of the costs of the SNI, which will be given in the final resolution issued by the SNE.

Article 24.

The rates set for each year will be reviewed for variations of costs, by means of an automatic formula established for such purposes by the SNE; which will take into account the effects of monetary devaluation with respect to other currencies, local inflation and unforeseen factors.

Article 25.

The contracts for purchase of electricity from the private producers on the part of ICE will have a maximum duration of fifteen years, with the possibility of renewal by mutual agreement. The extension must be requested prior to the expiration of each respective contract. For those plants that have an estimated useful life of less than fifteen years, the contracts will have a duration equal to or less than their useful life.

Article 26.

Loss of the concession, the producer's failure to comply with the clauses of the contract, of the law which authorizes the autonomous electrical generation or parallel N° 7200, or

BEST AVAILABLE DOCUMENT

of these regulations, will cause termination of the contract for electrical energy purchase entered into with the ICE without any responsibility on the part of that institution. Prior to termination of the contract the ICE will notify the private producer that he must correct the non-compliance within a reasonable period which it will grant for the purpose.

Article 27.

In order to execute the provisions of Article 16 of Law N° 7200, commercial banks must request the corresponding authorization from the Central Bank of Costa Rica, once the project which they wish to finance has complied with all the requirements established in said law, which must be governed by provisions in Article 85, section 1, letter B of the Constituting Law of the Central Bank of Costa Rica.

Article 28.

In order to enjoy the fiscal benefits contained in Article 17 of Law N° 7200, the private producer must obtain a favorable recommendation from the ICE with respect to the goods to be imported. Said recommendation must be submitted by the interested party to the Ministry of Finance, for its corresponding processing.

Article 29.

Let the executive decree N° 18947-MIRENEM, published in "The Gazette" N° 84 of 3 May 1989, be repealed.

Article 30.

It is effective as of its publication.

Done in San José on the twenty-first day of the month of March of nineteen hundred ninety-one.

R. A. CALDERON F.- Minister of Natural Resources, Energy and Mines, Hernán Bravo Trejos.

BEST AVAILABLE DOCUMENT

TAB 4

Dominican Republic:

Law No. 14-90

Coat-of-Arms of the Dominican Republic

The National Congress
In the Name of the Republic

Law No. 14-90

WHEREAS: It is an essential function of the Dominican State to create the conditions necessary in order to multiply the source of production, generators of wealth, and thereby establish the mechanisms enabling them to translate into benefits that reach all the sectors if the Dominican population;

WHEREAS: Electrical energy is an essential primary source for the socio-economic development of the nation;

WHEREAS: The construction of electrical energy generating facilities requires a long time and its cost representing a substantial investment for the Dominican State, which is obliged to distribute fairly its limited resources among the several areas that promote the socio-economic development of the Dominican people;

WHEREAS: Private enterprise, national and international, has shown interest in investing in the electrical energy sector;

WHEREAS: The Dominican State understands and guarantees the principle of free enterprise established in Article 8, Item 12, of the Constitution of the Republic, as faculty for private businessmen, national and foreign, to invest their own resources in any activity from which it is not expressly.

BEST AVAILABLE DOCUMENT

HAS GIVEN THE FOLLOWING LAW:
OF INCENTIVE TO THE NATIONAL ELECTRICAL DEVELOPMENT

CHAPTER I
PURPOSE AND APPLICATION

Art. 1.- This Law has as its purpose the promotion and stimulation of new and existing electrical energy companies, national and foreign, that contribute to the economic development of the country, and to that effect, creates the Directorate for the Development and Regulation of the Electrical Energy Industry, which shall have the purposes, powers and responsibilities established in this law and its Regulation.

To this effect, this law and its Regulation establish the incentives that shall be granted as stimulation for the projects and investments that concur with the purposes and goals identified.

PARAGRAPH.- The Directorate for the Development and Regulation of the Electrical Energy Industry shall be the coordinating and regulating organism for the electrical energy industry in the country. Among its functions shall be the implementation of the electric rate, the setting of the planning policy in the sector, the definition of the interconnection, voltage, frequency, potential factor standards and other technical aspects, the supervision of the contracts among companies, the approval of programs for the expansion of generation and the supervision of everything related to the companies **(can't read next few words)** law and the Dominican Electric Corporation.

Art. 2.- Those companies that shall increase the national electrical generating capacity, via the installation of new generator plants as well as new transmission and distribution circuits for said energy, shall be able to benefit from this law.

TRANSITORY PARAGRAPH.- In the first four (4) years of application of this law, projects that contribute to the improvement and/or increase in the production and/or the efficiency of the existing generating plans in combined cycle and the reduction of loss or fraud, shall also be able to benefit.

Art. 3.- The granting of the incentives and benefits referred to in this law, shall be strictly limited to the development poles, sectors, areas, zones, or regions that are declared to that effect by the Executive Power, save for the justified exceptions foreseen in this law itself.

PARAGRAPH I.- All the national territory shall be considered as the electrical energy zone, until the Executive Power should determine the respective demarcations.

PARAGRAPH II.- The Executive Power shall establish, via Decree, responding to the recommendation of the Directorate for the Development and Regulation of the Electrical Energy Industry, the demarcations and priority sectors in the process of national socio-economic development, per the planning guidance of the physical dimension prepared to that effect.

BEST AVAILABLE DOCUMENT

Art. 4.- The Dominican State, via the Directorate for the Development and Regulation of the Electrical Energy Industry, shall assume by virtue of this law, the responsibility of planning the demarcations and electrical development sectors declared to be of priority and shall be able to take, via a regulation issued to that effect, the control measures necessary to avoid the speculative maneuvers that would tend to slow or block the electrical development process.

CHAPTER II
QUALIFICATIONS FOR THE INCENTIVES

Art. 5.- The individuals or corporations, national or foreign, that initiate, promote and invest capital or purchase participation in activities concerning electrical energy companies and/or installations, shall be able to recur to the incentives and benefits provided for by this law, per the definitions and requirements to that effect the are established by this law and its Regulations.

PARAGRAPH I.- The individuals or corporations shall be able to deduct from their income, for the purposes of determining their net taxable income, those benefits, earnings or profits, originating from other economic activities or those originating from interest, dividends, capital or stock gains, that they invest in companies or projects that develop activities foreseen in this law.

PARAGRAPH II.- The individuals or corporations that develop electrical energy distribution, production and/or installation projects, or invest in the companies that develop them, shall be able to effect said investments via the purchase of the capital, securities, titles, bonds and other similar instruments, that may not be liquidated in less than five (5) years as of their issuance, issued by the companies classified by this law.

CHAPTER III
INCENTIVES AND BENEFITS GRANTED BY THE LAW

Art. 6.- The electrical energy installations and activities classified in accordance with the requirements provided to such effect, shall receive the following incentives and benefits according to the categories.

TAX EXEMPTIONS

Art. 7.- The investment of national and foreign capital, including those originating from international loans, duly registered in the Central Bank in conformity with the laws Nos. 251 of 1964 and 861 of 1978, and their respective modifications, or any other law or disposition that regulates said foreign investment, shall be benefitted from the following tax incentives.

BEST AVAILABLE DOCUMENT

a) Exemption from 100% of the payment of Income Tax for all the purposes contained in the law and its modifications and/or amplifications, derived by the individual or corporate persons from activities concerning the construction and operation of the electrical energy installations and the taxes that could apply to the income resulting from interest and commissions or any other fees for financing operations during the period of exemption provided to that effect; in like manner the revelation of the assets according to the replacement cost and the deduction of the losses from future profits until fully absorbed, shall be permitted;

b) Exemption from the tax on transferring property purchased for the installation of the facilities of the electrical energy projects, including those related to the registration or filing of mortgages, pledges, encumbrances or other liens, as well as on the construction of said facilities;

c) Exemption from the taxes on the formation of commercial companies or on the increase of their capital.

d) Exemption of national and municipal taxes and those on commercial patent licenses.

e) Exemption from 100% of all the duties and taxes on imports and other related charges, included tariffs, the unified taxes, the ad-valorem, any exchange surcharge or commission, those on internal consumption, as well as those that apply to the transfer of industrialized products, including those established by Law No. 74 of 15 January 1983, and its modifications, on fuels, lubricants, and other articles or products purchased in the country or imported, necessary for the construction, installation, operation, maintenance and repair or equipment, machinery and facilities, including the offices and branches, of the electrical energy **(can't read next few words)** according to their approval by the Directorate for the Development and Regulation of the Electrical Energy Industry. In all cases, the purchase in the country or abroad of fuel, lubricants, and other goods or raw materials, necessary for the operations of the electrical energy companies, shall be able to conducted with conditions equal to those applying to the Dominican Electric Corporation or any other state entity or company similar to it.

PARAGRAPH.- In no case will the tax-exempt importation of machinery, equipment, spare parts and accessories, fuel, lubricants, raw materials, semi-finished products, finished products, packaging and other components, be permitted when these are produced in the country in sufficient quantify and quality and at a competitive price. In order to establish the comparison of prices, the competing imported price must be added all the duties, taxes and import rates, as well as the "ITBI" (Industrial Products Transfer Tax) and the current exchange differential.

Art. 8.- The projects that benefit from this law may receive from private financial organisms, national and foreign, from the Dominican State, at the expense of its own funds or those that may be provided by the National Budget, the resources originating from the loans or facilities granted to the same State or the Dominican Government or its decentralized institutions, whether by international organisms or national governments, or whether they may be guaranteed or backed by the Dominican State, under an agreement which to that effect shall be celebrated

BEST AVAILABLE DOCUMENT

for short, medium or long (???) subject to the regulations established in the respective agreements.

Art. 9.- The monetary authorities shall guarantee the supply of the dollars required by the demand for the importation of goods and services for the electrical energy generation projects, duly classified. Furthermore, it shall guarantee the repatriation of the dollars that have as origin any foreign investment in electrical energy generation activities, in the manner foreseen by Law No. 861 on Foreign Investment and in accordance with that which is disposed by the Regulation of this Law.

Art. 10.- The tax exemption period corresponding to each electrical energy project, business or company shall be twenty (20) years as of the date of the resolution of approval for the project. A term not to exceed six (6) months in any case is granted to initiate in sustainedly and uninterruptedly, until the termination of the construction work. This term shall be counted as of the date of the approval of the project and its non-compliance will carry ipso-facto the loss of the acquired right.

Any electrical energy generating project, business or company shall be able to obtain from the Directorate for the Development and Regulation of the Electrical Energy Industry the extension of the exemption for up to five (5) more years, if it faithfully proves that a year before expiring the exemption period, no less than half of the share capital has nominally passed, through those years, to the hands of Dominican investors.

CHAPTER IV
DISTRIBUTION, MARKETING AND RATES

Art. 11.- The electrical energy companies benefitting from this law, shall be able to distribute and market its energy in the regions, zones, areas, sectors or poles in which they are authorized to operate by the Directorate for the Development and Regulation of the Electrical Energy Industry, when specifically authorized for that by the mentioned Directorate.

Art. 12.- The electric rate in the different regions, zones, areas, sectors or poles where the companies may be authorized to distribute electrical energy shall be approved by the Directorate for the Development and Regulation of the Electrical Energy Industry after studying and in accordance with the mechanisms and rules to be established in the Regulations of this law. The supply of electrical energy by means of specific contracts between producing companies and determined clients are expected, in which case the conditions established in said contracts, which shall be filed with the Directorate, shall prevail.

Art. 13.- The contracts that might be signed by the companies in the private sector with the Dominican Electric Corporation on the sale and supply of electrical energy, shall enjoy unlimited guarantee by the State as long as said contracts have been previously authorized by the Executive Power.

BEST AVAILABLE DOCUMENT

CHAPTER V
ADMINISTRATION OF THE ???

Art. 14.- For the application of this law, the Directorate for the Development and Regulation of the Electrical Energy Industry, which shall be an autonomous entity, shall be governed by a Board of Directors composed of:

The Minister of Industry and Commerce who shall preside,

The Minister of Finance,

The Technical Minister of the Presidency,

The Governor of the Central Bank of the Dominican Republic.

who shall be represented in the meetings by the immediately inferior officials they appoint and, in addition, by four (4) representatives of the private sector, chosen by the following entities or groups:\

The National Businessmen's Council, Inc.
("El Consejo Nacional de Hombres de Empresa, Inc.)

The Association of Industries of the Dominican Republic, Inc. ("La Asociación de Industrias de la Rep. Dominicana, Inc.")

The Federation of the Chambers of Commerce, Inc.
("La Federación de Cámaras de Comercia, Inc.")

The Dominican Free Zones Association.
("La Asociación Dominicana de Zonas Francas")

Art. 15.- At the head of the Directorate for the Development and Regulation of the Electrical Energy Industry there shall be an executive director, who shall be designated by the Executive Power.

Art. 16.- The petition documents by those interested in benefiting from the terms of this law shall be filed in the office of the Directorate for the Development and Regulation of the (can't read next few words) which shall be created to that effect, and which shall carry a registry of said petitions in the manner stated in the Regulation.

Art. 17.- The petitions submitted for the consideration of the Directorate for the Development and Regulation of the Electrical Energy Industry shall be approved or rejected within the periods established in the Regulations of this Law, per the different circumstances and documentary levels.

BEST AVAILABLE DOCUMENT

BEST AVAILABLE DOCUMENT

Art. 18.- The petitions that are favorably received by the Directorate for the Development and Regulation of the Electrical Energy Industry shall be the object of a Resolution containing the statement of the economical and technical characteristics that may have served as the basis for its decision. The resolutions issued by the Directorate shall be irrevocable and can only be rendered ineffective when the Directorate proves important infractions by the beneficiaries of the Law, by means of the mechanisms established in the same law and in the Regulation.

CHAPTER VI
REQUIREMENTS FOR THE PRESENTATION OF PETITIONS

Art. 19.- The projects petitioning the incentives of this law must be formulated and presented with the following documents:

a) A draft proposition with the preliminary details on engineering, cost, generation, and local participation.

b) A technical-economic feasibility study; an investment document stipulating the flow of funds for the term for which will last the amortization of the financing obtained, and an itemized estimate of the dollars requirements for the period for which the tax exemption will last, as well as the impact of the project on the national economy.

c) A study on the environmental impact of the project.

PARAGRAPH I.- The projects for the installation of electrical energy, in order to classify as beneficiaries of this law, must have a minimum projection which will be determined in each case by the Directorate for the Development and Regulation of the Electrical Energy Industry. This organism must approve in each case the minimum requirement of the amount of energy to be generated.

PARAGRAPH II.- The final approval of the project shall be subject to the compliance of the specific Reference Terms which will be submitted by the Directorate.

CHAPTER VII
CONTROLS

Art. 20.- The electrical production projects utilizing unconventional methods and which satisfy the basic criteria of financial and economic feasibility, shall be considered as priority.

PARAGRAPH I.- Unconventional projects utilizing the following primary sources of energy as their production method shall be considered: solar energy, geothermal, wind, hydraulic, nuclear, biomass, tree-thermal or national solid wastes.

BEST AVAILABLE DOCUMENT

PARAGRAPH II.- In order to establish the rates for the production of electrical energy by unconventional methods, the savings in foreign currency and the incidence in the economic development of the country must be taken into account.

Art. 21.- Any electrical energy generation project must comply with the international requirements on environmental pollution.

Art. 22.- The Directorate for the Development and Regulation of the Electrical Energy Industry, through its specialized dependencies, shall oversee all aspects concerning the compliance of the obligations contracted by the companies or individuals by virtue of the concession of the benefits or incentives of this legislation.

Art. 23.- Failure to comply with the obligations by the individuals or corporations benefitting from this law, during the exemption period, upon the Directorate for the Development and Regulation of the Electrical Energy Industry's fulfilling the procedure of proof and summons, and after a reasonable term granted to that effect by the Directorate, as per that which is established in the Regulation, the suspension of the granted tax exemptions or benefits shall be determined.

Art. 24.- Non-compliance by the beneficiaries of this law, of the concessions of the benefits and incentives that are granted them, shall incur the application of the penalties specified in this Regulation, and could incur, furthermore, up to the cancellation of said exemptions and incentives that may have been granted.

The Ministry of Finance, upon recommendation of the Directorate for the Development and Regulation of the Electrical Energy Industry, shall apply the sanction by means of a duly motivated resolution, which must be communicated by bailiff's notice to the interested parties, who shall dispose of the mechanisms according to the laws to enforce their rights. The State shall execute these actions, except in the case of the individuals or corporations to which said sanctions have been applied, show or establish that the non-compliance in which they have incurred was due to force majeure, in which case the necessary time will be granted to correct the infraction, anomaly causing the non-compliance or violation.

Art. 25.- Any individual or corporation importing construction material, furnishings, equipment and any other effects in general, that have been exempted under the sanction of this law, who should sell, lease, loan or commercialize in any way such effects, or who in any should give a use to them other than that for which the exemption was granted, shall be punished with a fine equal to twice the taxes and duties left unpaid. In like manner, said persons shall be responsible for the payment of the corresponding taxes and duties, without prejudice to any of the other prosecutions that may take place.

Art. 26.- The funds necessary to cover the expenses originating in the functioning of the Directorate for the Development and Regulation of the Electrical Energy Industry, created by virtue of this law, shall be consigned in the Budget and State Public Expenses Law, every year, in the chapter corresponding to the Ministry of Industry and Commerce, as well as a monthly contribution that must be made by the Dominican Electric Corporation and the individuals or

BEST AVAILABLE DOCUMENT

corporations dedicated, under the sanction of this law, to the activities it regulates, in proportion to the installed production capacity for electrical energy they may have.

Art. 27.- Despite that which is expressed in the previous article, the Directorate for the Development and Regulation of the Electrical Energy Industry shall be able to obtain resources for its functioning, originating from financing, contributions or donations by organisms and entities, public and private, national and international.

Art. 28.- The Directorate for the Development and Regulation of the Electrical Energy Industry must prepare a bill of Regulation to this law, to be submitted to the Executive Power.

Art. 29.- This law annuls and substitutes any other law or portion of a law that may be contrary to it.

GIVEN in the Meeting Chamber of the House of Deputies Palace of the National Congress, in Santa Domingo de Guzmán, National District, Capital of the Dominican Republic, on the sixteenth day of the month of January of the year nineteen hundred and ninety, 146th year of Independence, 127th of the Restoration. (s/) Luis José González Sánchez, President; Aminta Vólquez de Pérez, Secretary; Roberto A. Acosta Angeles, Secretary.

GIVEN in the Meeting Chamber of the Senate, Palace of the Palace of the National Congress, in Santo Domingo de Guzmán, National District, Capital of the Dominican Republic, on the sixteenth day of the month of January of the year nineteen hundred and ninety, 146th year of Independence, 127th of the Restoration.

s/
FRANCISCO A. ORTEGO CANELA,
President

s/
SALVADOR A. GOMEZ GIL
Secretary

s/
MESSIN SARRAF EDER
Secretary Ad-hoc

JOAQUIN BALAGUER
President of the Dominican Republic

In the exercise of the powers conferred upon me by article 55 of the Constitution of the Republic,

BEST AVAILABLE DOCUMENT

I PROMULGATE this law and order that it be published in the Official Gazette, for it to be known and complied with.

GIVEN in Santo Domingo de Guzmán, National District, Capital of the Dominican Republic, this FIRST (1st) day of the month of FEBRUARY of the year nineteen hundred and ninety, 146th year of the Independence and 127th of the Restoration.

s/
Joaquin Balaguer

BEST AVAILABLE DOCUMENT

TAB 5

Indonesia:

- **Newspaper/Magazine Articles**
- **USAID Report Number 92-07 Regarding Electricity Pricing Incentives**
- **Speech Prepared by R. M. Sayid Budihardjo, "Issues Relating to Private Investment in the Power Sector Indonesian Utility Experience"**
- **Speech Prepared by Moeljadi Oetji, "The Role of Private Power for Future Power Supply in Indonesia"**

BEST AVAILABLE DOCUMENT

42ND STORY of Focus printed in FULL format.

Copyright 1994 International Executive Reports, Ltd.
East Asian Executive Reports

March 15, 1994

SECTION: INDONESIA; Volume 16, Number 3; Pg. 6

LENGTH: 4265 words

HEADLINE: Renewable and Alternative Energy Potential in Indonesia: Short- and Long-Term Plans

BYLINE: This article is based on a U.S. Department of Commerce market study prepared in Jakarta.

BODY:

Indonesia is determined to exploit its renewable and alternative energy sources to help meet the country's soaring demand for electric power.

The high priority the government has placed on this sector is one of the most important factors affecting Indonesian demand for foreign hydro and geothermal electric power generation and related equipment, according to a recent U.S. Department of Commerce market study.

To meet rising demand for electric power, Perusahaan Listrik Negara (PLN), the state-owned electric utility, will have to add an average 1,500 to 2,000 MW of capacity a year through the end of 1999. The government has also opened power generation to the private sector on a build-own-operate (BOO) basis, and 5,000 to 10,000 MW are expected to be added in this way between this year and the end of the century.

So far, demand has outpaced supply. Only about 60 percent of the people in Indonesia live in homes connected to electric power, and most of those who do, can subscribe to only limited amounts of the restricted supply. Indonesia is the fourth largest country in the world in terms of population (about 186 million in 1992, with a growth rate of 2.1 percent). Among the ASEAN countries, it has the lowest per-capita consumption of electric power.

The problem has become more acute since the late 1980s, when foreign investment in Indonesia grew substantially and the industrial sector began to develop rapidly. Lately, the government has had to limit the supply of electricity for new housing developments and commercial operations in many areas. As a result, some domestic and foreign f have canceled investment plans, causing problems for both the government and the private sector.

Best Sales Prospects

Imports of geothermal and hydroelectric power generation and related equipment reflect Indonesian efforts to increase capacity. From an estimated $ 35.5 million in 1990, they increased to $ 90.2 million in 1991, and to $ 365.8 million in 1992. Imports are projected to rise by 25 to 30 percent a year on average through 1996.

LEXIS·NEXIS LEXIS·NEXIS LEXIS·NEXIS
Divisions of Mead Data Central, Inc.
BEST AVAILABLE DOCUMENT

Equipment in demand includes generation and associated transmission and distribution equipment for geo-thermal and hydroelectric power plants. Based on information provided by major end-users and importers, and on trends identified from the official import list, best sales prospects through 19% include the following equipment (listed in descending order according to import volumes during the past two years):

INDONESIA

-- turbines;

-- parts of turbines;

-- other turbines in CKD;

-- board panels for voltage over 1,000 volts;

-- automatic circuit breakers;

-- liquid dielectric transformers, capacity larger than 10,000 kVA,

-- transformers, capacity larger than 500 kVA,

-- static converters; and

-- inductors for transformers.

Switching from Oil

Demand for electricity in Indonesia is increasing at an average rate of 15 percent a year, with growth expected to accelerate toward the end of the century. Despite government and private sector efforts to increase supply, thousands of households and industrial organizations are on the waiting list for new subscriptions. To add to frustrations, applying for additional subscriptions is a complicated process.

In these circumstances, the government and private sector are making efforts to utilize various energy sources in order to increase total generation capacity. At the same time, the government is trying to reduce the country's dependency on oil as a fuel for power generation, and increase the use of gas and coal, which Indonesia has in abundance. While the country is an oil producer and a member of OPEC, its reserves of crude are declining. Indonesia began to switch to other fuels in the later 1980s, after oil's share of total power generated increased to 59.0 percent in fiscal year 1983/84, from 39.5 percent in FY 1973/74. (Unless otherwise noted, years appearing with a slash such as 1983/84, are fiscal years.) By 1991/92, oil's share of the total had declined to 44.2 percent. Under the government's overall plan for the power sector, oil will fuel only 5.3 percent of the power generated by 2003/04.

Although abundant, coal and gas are also finite resources, and their exploitation is capital intensive and requires, in addition, infrastructure for transportation and pollution control. Policymakers have therefore decided that strong efforts have to be made to exploit other sources of energy to generate

LEXIS·NEXIS LEXIS·NEXIS LEXIS·NEXIS
Images of Mead Data Central, Inc.
BEST AVAILABLE DOCUMENT

electric power, especially those sources classified as renewable (such as hydropower) and as alternative (such as geothermal energy). These energy sources cost relatively less to develop and are "cleaner."

In early July last year, PLN and the Norwegian Embassy in Jakarta conducted a joint seminar on "Hydropower Development with an Emphasis on Mechanical Equipment," held in conjunction with the opening of an Indonesian representative office by Kvaener Energy, one of Norway's leading electric power holding companies. At the seminar, Indonesia's hydropower energy potential was estimated at 75,000 MW, with less than three percent of this potential exploited to date. Norway, whose percapita consumption of electricity is among the highest in the world, produces 25,000 MW sourced from hydro-power plants. Both the Norwegian government and private sector plan to assist in the exploitation of Indonesian hydro-power sources on a commercial basis.

Seminars on the exploitation of geothermal energy sources have also been held, often with foreign participation. According to estimates made at these seminars, Indonesia has the potential to tap 16,000 MW of electric power from geothermal energy sources, but has thus far exploited these sources for only 140 MW. In contrast, the Philippines, with a total population of less than one third of Indonesia's, has a total geothermal production capacity of over 1,000 MW.

Development Plans

Table 1 shows the general mix of various energy sources in PLN's power generation development plan for the Java-Bali grid system, and for production and supply systems outside Java-Bali, from 1991/92 to 20031 04. This plan is known as PLN's "high scenario," which differs from its long-range production plan.

TABLE 1: PLN's Power Generation Development Plan (High Scenario) 1993/94 through 2003/04

(all figures in megawatt)

Energy Source	1991/92	1993/94	1998/99	2003/04
Java-Bali Grid System				
Hydro power plant	1,964	2,046	2,614	3,140
Geothermal power plant	140	250	440	440
Steam power plant (coal)	1,600	2,000	10,600	17,400
Steam power plant (oil/gas)	1,900	1,900	1,700	1,600
Combined cycle power plant	--	2,942	3,678	5,178
Gas turbine power plant	667	787	398	4,978
Diesel power plant	86	92	62	62
Total Java-Bali	6,357	10,017	19,492	32,787
Outside Java-Bali				
Hydro power plant	310	311	1,807	3,213
Geothermal power plant	--	23	248	266
Steam power plant (coal)	130	195	673	996
Steam power plant (oil/gas)	310	310	260	260
Combined cycle power plant	--	446	859	892
Gas turbine power plant	449	384	399	469
Diesel power plant	1,727	1,824	2,021	2,115

LEXIS·NEXIS LEXIS·NEXIS LEXIS·NEXIS
ces of Mead Data Central, Inc.
BEST AVAILABLE DOCUMENT

Total outside Java-Bali	2,926	3,493	6,267	8,211
Total Indonesia	9,283	13,510	25,759	41,009

As the table indicates, under the "high scenario," the power produced from geothermal and hydropower sources is to increase steadily -- although their share of total electricity generated will fluctuate. This share is to decrease from 26 percent of total production in 1991/92 to 19.5 percent in 1993/94, then increase to 19.8 percent in 1998/99, and decrease again to 17.2 percent in 2003/04. At the same time, the volume of production from the two sources is to increase from 2,414 MW of capacity in 1991/92 to 2,630 MW in 1993/94, then rise to 5,109 MW in 1998/99, and reach 7,059 MW in 2003/04. Under PLN's long-range development plan (Tables 2 and 3), a total of 7,548 MW is to be generated by the two energy sources by 2003/04.

The addition of 2,479 MW in the five years from 1993/ 94 to 1998199, and of another 1,950 MW from 1998/99 to 2003/04, should create demand for power generation, transmission and distribution equipment.

Depending on conditions, Indonesia apparently may vary these plans for exploitation of geothermal and hydro energy sources. Emergency needs and available financing could mean higher additions to capacity, while shifting priorities or a lack of financing could result in lower figures.

Procurements for the projects are expected to be funded partially by soft loans or concessional financing from foreign suppliers, lenders, consulting engineers and investors.

Funding

In July 1993, the Indonesian government approved a financial plan for PLN to borrow funds from local commercial banks amounts to about $ 800 million, this commercial bank issue is intended to finance various ongoing electric power plant projects, including hydropower plants. Development funds for PLN apparently had to be secured through a commercial bank syndication because of insufficient self-generated funds and the limited availability of soft loans from both international lending institutions and those of the donor countries (such OECF of Japan, and KFW of Germany).

Table 2: Hydroelectric Power Plants Expected to Be Constructed Through 2003/04

Project Name	Capacity (MW)	Total Unit	Expected Operation
Cipasang	400	2	1998/99
Musi Surau	68	2	1998/99
Musi Susup	43	2	1998/99
Besai	90	2	1997/98
Kotopanjang	114	3	1997/98
Singkarak	175	4	1996/97
Jatigede	175	4	1998/99
Renun	82	2	1997/98
Riam Kiwa	42	2	1997/98
Bakaru-II	126	2	1997/98
Tondano/Tonsea	14	3	1995/96

LEXIS·NEXIS LEXIS·NEXIS LEXIS·NEXIS

Cirata-II	14	3	1995/96
Sentani	13	2	1996/97
Cimandiri-III	232	2	1997/98
Palu-III	76	4	2000/01
Iralaalo	27	3	2000/01
Isal-I	20	2	2000/01
lsal-II	60	3	2000/01
Beburung	22	2	1997/98
Sipansihaporas	44	2	1998/99
Peusangan I-II	50	4	1997/98
Peusangan-IV	31	2	1998/99
Tampur I-II	428	4	1997/98
Lawe Alas	322	4	1999/00
Wampu-I	115	2	2000/01
Wampu-IV	45	2	**
Wampu Laubiang	121	2	**
Toru-I	48	2	2001/02
Toru-II	148	2	2001/02
Batang Bayang-II	47	2	**
Merangin-II	88	2	1999,00
Ranau	30	2	**
Padekembayung	30	3	2001/02
Sei Pinoh-I	137	3	**
Riam Kanan	30	2	**
Malea I-II	184	4	1998/99
Sapalewa	26	2**	
Putih-I	16	2	1995/96
Putih-II	17	2	1997/98
Ayung-Sidan	23	2	1998/99
Ayung-Selat	19	1	1998/99
Oyo-II	29	2	1997/98
Rajamandala	28	2	**
Karama-II	234	2	1998/99
Lariang	265	2	1998/99
Poigar-I	16	2	1998/99
Poigar-II	14	2	1998/99
Ketahun-I	17	2	2002/03
Kusan-III	28	1	1999/00
Cibuni	57	1	1999/00
Bili-Bili	16	2	1998/99
Wonorejo	13	1	1999/00
Batutegi	24	1	1998/99
Jambu Aye	160	2	1999/00
Matenggeng	100	2	1999/00
65 mini-hydro plants	60	--	1996/03
Total	5,339		

Funding can therefore be a problem. An example is the Cirata-II hydropower project, involving a power plant designed to produce 500 MW and requiring total funds of $ 380 million. Only $ 142 million was available through the World Bank in the form of a soft loan, so the rest of the money has to be generated from domestic sources. As a result, PLN will allocate part of the commercial bank syndication loan mentioned above to finance the Cirata-II project.

LEXIS·NEXIS LEXIS·NEXIS LEXIS·NEXIS
vices of Mead Data Central.
BEST AVAILABLE DOCUMENT

100

The government and PLN's evolving funding and pro-curement policies regarding electric power generation projects will be an important consideration for equipment suppliers, consulting engineers, and contractors, as well as for foreign investors interested in electric power generation in Indonesia (as discussed below).

PLN and Private End-Users

PLN is Indonesia's largest end-user of electric power generation and related equipment for hydro and geothermal plants; it is the only company currently producing and distributing power produced from these sources on a commercial basis.

Until recently, PLN had been the sole supplier of electricity to the national grid system, although large numbers of private and state-owned companies in Indonesia generate their own electricity, called captive power.

PLN had only 776 MW in generating capacity in 1969 at the beginning of Indonesia's first five-year plan (Repelita I). By 1992 (one year before the end of Repelita V), it had about 9,400 MW in power generation, transmission and distribution capacity. Over the same period, installed captive power increased from about 300 MW to approximately 8,400 MW.

Despite these significant additions to capacity, demand for electricity has risen even faster. To help meet this demand, the government has decided to allow private companies to build power plants on a build-own-operate (BOO) basis and feed the electricity they produce into the grid. Many foreign companies have shown interest. Equipment sales prospects should be enhanced by the BOO concept, as well as by planned PLN projects.

Several domestic and foreign companies have made commitments to invest in the electric power generation business in Indonesia. Some local private companies, in cooperation with PLN, are already supplying the power they produce, and some are building new generation facilities. Most independent power producers are interested in coal-fired, gas-fired and combined-cyde plants, but two have expressed interest in hydropower plants, and several have begun preliminary negotiations on investments in geothermal power projects. Opportunities therefore exist for discussing investment arrangements with PLN and the government. For geothermal plants, private investors can do the exploration work and then sell the thermal heat they produce to PLN in return for installation of geothermal power plants at the sites. Unocal (U.S.) and Pertamina (the Indonesian state-owned oil company) have already conducted exploration activities. These companies intend to sell the geothermal energy they develop to PLN on a contract basis under a power purchase agreement for a period of 30 years.

Tables 2 and 3 show the hydro and geothermal electric power plants the government expects to be built by 2003/04.

A list of companies prequalified to compete for private power projects in Indonesia is available from: Chairman, Technical Working Group, Private Power Team, Directorate General for Electric and New Energy, Jakarta H.R. Rasuna Said, Bok x-2, Kav. 7-8, Kuningan, Jakarta 12950, fax: (62-21) 520-3850, or 516044.

XIS·NEXIS LEXIS·NEXIS LEXIS·NEXIS
ces of Mead Data Central, Inc.
BEST AVAILABLE DOCUMENT 101

TABLE 3: Geothermal Power Plants Expected to Be Constructed Through 2003/04

Project Name	Capacity (MW) *	Expected Operation
Kamojang-IV and V	110	1996/97
Salak-III through VI	200 (4 X 55)	1996/97 through 1997/98
Darajat-II	55	1997/98
Dieng-I through III	50	1994/95
Dieng-IV through VI	90 (3 X 30)	1996/97
Patuha-I through III	95	1997/98 through 1999/00
Wayang Windu-I through III	20	1997/98
Karaha	55	1998/99
Bali-I through IV	200 (4 X 55)	1997/98 through 2000/01
Saruila-I through VI	330 (4 X 55)	1998/99 through 2003/04
Sibayak-I	20	1998/99
Sibayak-II	55	**
Lumutbalai-I through VI	120 (6 X 20)	1998/99 through 2003/04
Ulubelu-I through VI	120 (6 X 20)	1998/99 through 2003/04
Rajabasa-I through VI	120 (6 X 20)	1998/99 through 2003/04
Lahendong-I through III	130	1996/97 through 1998/99
Tompaso-I through III	165 (3 X 55)	1997/98 through 1999/00
Sulili-I through IV	200 (4 X 55)	1997/98 through 2000/01
Weisa-I through IV	20 (4 X 5)	1996/97 through 2001/02
Sembelun-I through IV	20 (4 X 5)	1996/97 through 1999/00
Ulumbu-I through III	9 (3 X 3)	1995/96 through 1999/00
Kerinci-I and II	5.4	1996-1998
U'u Sumbawa-I through IV	10 (4 X 2.5)	1997/98 through 1999/00
Sorong-I through IV	10 (4 X 2.5)	1996/97 through 1999/00
Total	2,209.4	

* installed capacity.

** Operation year has not yet been decided.

Local Production

LEXIS·NEXIS LEXIS·NEXIS LEXIS·NEXIS
ices of Mead Data Central, Inc.
BEST AVAILABLE DOCUMENT

To create jobs and promote the use of the country's abundant raw materials and natural resources, government policy is aimed at making Indonesia self-sufficient in many critical products, raw materials and supplies, and in less sophisticated machinery and equipment. In line with this policy, the number of companies producing generation, transmission and distribution equipment in Indonesia has gradually increased over the past five years. Hydro and geothermal power generation and related equipment being produced in the country includes:

-- distribution and transmission cables;

-- distribution and transmission poles;

-- voltage switch breakers;

-- distribution transformers;

-- kWh-meters;

-- transition starters;

-- socket terminals;

-- distribution and control panels; and

-- boilers.

Domestic production of power generating, transmission and distribution equipment increased by about 15 percent in 1992 and an estimated 20 percent in 1993. Regarding hydro and geothermal power equipment specifically, local production is expected to increase by 25 percent annually through 1996.

Available statistics indicate that in 1992, domestic production supplied less than 30 percent of total market demand for hydro and geothermal power generation and transmission equipment. This market share may increase substantially over the next few years, however, as a result of government efforts to promote domestic and foreign investment in electric power generating system machinery and related equipment.

Nevertheless, Indonesia is expected to import the items listed earlier as best sales prospects in large amounts through the end of the century. Domestic producers are unable to produce enough of this equipment to meet demand.

Another important factor in the market is that foreign sources will probably continue to provide most of the funding for installing generation plants and distribution and transmission facilities. For donor-financed projects, equipment and machinery is often purchased from the donor countries involved. For projects financed by international lending institutions such as the World Bank and the Asian Development Bank, equipment generally must come from member countries.

Imports

XIS·NEXIS LEXIS·NEXIS LEXIS·NEXIS
ces of Mead Data Central, Inc.
BEST AVAILABLE DOCUMENT

Indonesia imported about $ 2 billion worth of power generation and associated equipment in 1992, but statistics are not broken down to show the import value specially for just hydro and geothermal power generation and related equipment. As noted, according to estimates, imports of such equipment reached $ 365.8 million in 1992.

In any event, increasing imports of steam and water turbines needed in hydro and geothermal power plants is an established trend. Total imports of steam and water turbines in 1992 were $ 367 million, of which an estimated 90 percent (or $ 330 million) were considered as power generation equipment imports. The total import value of associated equipment (such as power transmission equipment) was about $ 235 million m 1992. Of this total, about $ 35.2 million in imports can be attributed to hydro and geothermal power generation (based on the fact that these two energy sources account for about 15 percent of total energy production).

Given the number of new hydro and geothermal power projects planned, and the limited competition from domestic suppliers, total imports are expected to increase at annual average rate of 25 to 30 percent through 19%. The supply of electric power is expected to increase dramatically over the next 10 years. Initially, demand for equipment will come from PLN, but then added demand will come from private companies producing power for industrial estates and for sale to PLN. The government also plans to get power to the rural areas of the country, which will further add to demand.

Competition

Japan has long dominated the Indonesian import market for hydro and geothermal power generation and related equipment, with a 78.4-percent market share in 1992, followed by Germany (7.1 percent), the U.S. (5.9 percent), France (2.3 percent), Benelux, Switzerland and other countries. The Japanese government routinely supplies concessional financing or export credits for electric power generating equipment, especially for hydropower projects. The German and French governments also often provide such financing arrangements for electric power projects.

For end-users that are free to choose their sourcing, the most important competitive factors appear to be price, quality, and delivery terms, in that order.

For PLN, which builds many plants with loans from international lending institutions and donor countries, the main competitive factor is the provision of the loan itself. For PLN projects financed by self-generated or government funds, competitive bidding is the standard practice.

For joint venture firms buying power generation equipment, purchase decisions may be based on the foreign partner's wish to source the equipment from its home country, but price, financing and delivery terms would still be major considerations.

Distribution and Business Practices

Import tariffs on hydro and geothermal power generation and related equipment range from 0 to 25 percent, with a 10-percent import sales tax added.

LEXIS·NEXIS LEXIS·NEXIS LEXIS·NEXIS
ices of Mead Data Central, Inc.
BEST AVAILABLE DOCUMENT

Some electric power generation equipment is sold through local distribution channels. Local products are usually distributed by sole distributors or directly by local manufacturers. When local contractors receive orders from PLN for the installation of electric power generation facilities, they in turn order supplies either from sales distribution units of sole distributors or directly from abroad, if necessary.

Many foreign companies have representatives in Indonesia. In addition to making sales, these agents keep up with international tenders and other opportunities. In practice, government agencies tend to give preference to foreign companies that have a local agent or that manufacture locally.

A number of general importers/distributors deal in a variety of products, including electric power generation and related equipment.

End-users and contractors that buy a relatively small amount of equipment generally pay by cash or by deferred cash payment (two to three months). Larger end-users or contractors often can arrange special payment and delivery terms with local importers and distributors. Some may be required to open letters of credit.

Purchasers are sometimes asked to pay 25 to 50 percent when the order is made, and the balance on receipt of the equipment. Payment terms for projects financed by foreign loans are usually covered in the loan agreement.

Key Contacts

The following is a list of organizations and associations whose members are related to electric power distribution and generation, either as end users, importers, distributors, manufacturers, publications, regulatory bodies and the like. The country and city codes for the fax numbers are (62-21).

* Perusahaan Listrik Negara (PLN -- state-owned electric power company), Jalan Trunojoyo Blok M I/135, Jakarta Selatan; contacts: Dr. Ir. Zuhal, M.Sc., President Director; Ir. R. Kodiat Samadikun, Director for Programming; fax: 720-4929

* Department of Mines and Energy, Jalan Merdeka Selatan No. 18, Jakarta Pusat; contact: Dr. I. B. Sudjana, Minister; Dr. Ir. Umar Said, Secretary General; fax: 384-7461

* Directorate General of Electricity and Energy Sources, Department of Mines and Energy, Jalan Rasuna Said Kav. 7-8 Blk. X-2, Jakarta Selatan; contact: Prof. Dr. Artono Arismunandar, Director General; fax: 516-044

* National Energy Coordinating Board (BAKOREN -- 13 members, composed of high-ranking Indonesian government officials), Jalan Merdeka Selatan No. 18, Jakarta Pusat; contacts: Mr. I. B. Sudjana, Chairman; Ir. Suyitno Padmosukismo, 1st Secretary

* Energy Resources Technical Committee (32 members from all relevant Indonesian government agencies), Jalan Rasuna Said Kav. 7-8 Blk. X-2, Jakarta Selatan; contact: Prof Dr. Artono Arismunandar, Chairman; Dr. A. J. Surjadi,

LEXIS·NEXIS LEXIS·NEXIS LEXIS·NEXIS
ices of Mead Data Central, Inc.
BEST AVAILABLE DOCUMENT

Secretary

* Electric Power Generation Development Team, Jalan M.H. Thamrin No. 8, Jakarta Pusat; contact: Prof Dr. B.J. Habibie, Chairman

* Association of All National Importers (GINSI), CTC Building, 4th Floor, Jalan Kramat Raya 94-96, Jakarta Pusat; contact: Mr. Daryatmo, Chairman; telex: 46793 GINSI IA

* Association of Indonesian Electrical Accessories (APPI) Gajah Mada Tower 23rd Floor, Jalan Gajah Mada 19-26, Jakarta Pusat

* Association of State Commercial Enterprises (Asosiasi Pesero Niaga), c/o PT. Dharma Niaga, Jalan Abdul Muis 6-10, Jakarta Pusat

* Association of Indonesian Electrical Contractors (AKLI), c/o. INKOPAL Bld. 3rd Floor, Jalan Kramat Raya 27, Jakarta Pusat

* PT. Guna Elektro (importer and sole agent), Jalan Hayam Wuruk 3, Jakarta 10120, fax: 355-485

* PT. Lima Wira Wisesa (importer and sole agent), Jalan Cikini Raya No. 1, Jakarta 10330, fax: 310-5704

* PT. Listrindo (importer and sole agent), Jalan Gajah Mada 3-5, Duta Merlin Shopping Center Lt. 1/18-21, Jakarta, Pusat

* PT. Intan Jaya Puri (importer and sole agent), Jalan Tiang Bendera III/72, Jakarta 11230, fax: 690-2664

* E. Herman & Co. (importer and sole agent), Jalan K.H. Zainul Arifin 3-A, Jakarta Pusat, fax: 360-271

LANGUAGE: ENGLISH

BEST AVAILABLE DOCUMENT

LEXIS·NEXIS LEXIS·NEXIS LEXIS·NEXIS
ices of Mead Data Central, Inc.

18TH STORY of Focus printed in FULL format.

Copyright 1994 The Times Mirror Company
Los Angeles Times

August 18, 1994, Thursday, Home Edition

SECTION: Business; Part D; Page 1; Column 2; Financial Desk

LENGTH: 1031 words

HEADLINE: INTERNATIONAL BUSINESS / SPOTLIGHT ON INDONESIA;
TURNING OVER A GREEN LEAF;
INDONESIAN FIRMS CASH IN ON ENVIRONMENTAL AWARENESS

BYLINE: By MARGOT COHEN, SPECIAL TO THE TIMES

DATELINE: JAKARTA

BODY:

Jakarta businessman Didi Rasyidi has a hot product.

As the sole Indonesian licensee of solar panels from Hawthorne-based Solec International, Rasyidi has found an eager customer in the Indonesian government, which is snapping up the panels to provide a renewable source of power for remote villages that have yet to be reached by the state electric company.

"My dream is . . . in every small town, people could buy a packaged solar system with cash," said Rasyidi, whose PT Altari company is heading toward $3.5 million in annual sales. But his is not the only firm here dreaming of cashing in on a new environmental awareness.

Indonesia, long considered the bad boy of the international "green" movement, has blossomed into a promising market for environmental goods and services.

Armed with new satellite photos and other disturbing proof of environmental degradation, the government is moving with fresh vigor to rein in the destruction of the nation's tropical rain forests, protect its coral reefs, cleanse its rivers, utilize renewable energy sources and promote recycling.

In addition to revising environmental regulations, banning the import of toxic waste and clarifying rules on environmental impact studies for new investments, officials are anxious to tap the private sector to get the job done.

"I think it is necessary to introduce sufficient economic motives to protect the environment," says State Minister for Environment Sarwono Kusumaatmadja. " . . . People should see a vested interest in preserving and protecting the environment."

Indonesia's Environmental Impact Management Agency (BAPEDAL) has obtained $120 million in loan funds from Japan's Overseas Economic Cooperation Fund to help implement a program to clean up 24 of the nation's most polluted rivers.

LEXIS·NEXIS LEXIS·NEXIS LEXIS·NEXIS
ces of Mead Data Central, Inc.
BEST AVAILABLE DOCUMENT

Low-interest loans and technical expertise will be provided to companies in polluting industries as an incentive to add safeguards such as waste water treatment plants.

Some companies are proceeding without government help. PT Texmaco Jaya, one of Indonesia's largest textile producers, plans to build a $1-million treatment plant at one of its factories.

The plant, part of a $450-million expansion, will complement an "aerated lagoon" already in operation at Texmaco's West Java polyester factory, which churns out water clean enough to irrigate rice fields downstream along the Citarum River. At least two other textile factories in the area have also begun constructing treatment plants.

"The industry is concerned now," said Yani Witjaksono, president of Yayasan Bina Usaha Lingkungan, a foundation that provides funding and technical assistance to environmental entrepreneurs.

"The impact of pollution does not only affect the community, but it affects other industries as well. In east Java, for example, the waste from the wood industry can destroy a shrimp farm," Witjaksono said.

Even the family of President Suharto has gotten involved in anti-pollution efforts. In May, PT Bimantara Citra, a conglomerate controlled by one of the president's sons, helped launched Indonesia's first hazardous and toxic waste disposal facility, a joint venture with U.S.-based Waste Management Inc.

"I think we're doing quite well, said Patrick Heininger, president of PT Waste Management Indonesia.

The disposal facility has 55 customers -- at least half of them companies with foreign partners. Customers represent the chemicals, pharmaceuticals, fertilizer and pesticide industries, among others.

The disposal plant needs some 200 customers for the plant, which will ultimately cost $100 million, to break even.

Heininger said the company will offer industry relatively inexpensive disposal services. But to dissuade companies from turning to an even cheaper disposal outlet -- the river -- local officials in the industrial zones ringing Jakarta have invited factory managers to industry-specific seminars on safe disposal.

The campaign will eventually be expanded to other areas of the country where three more toxic waste facilities are planned.

In recognition of Indonesia's traditionally weak and corrupt legal system, the government plans to supplement legal measures with the tool of public exposure of the "good guys and bad guys."

BAPEDAL plans to begin publicizing ratings of companies according to how responsible they are to the environment. To turn up he heat, it also plans to publicize information showing whether support banks and other financial institutions back responsible or irresponsible companies.

XIS·NEXIS LEXIS·NEXIS LEXIS·NEXIS
ces of Mead Data Central, Inc.
BEST AVAILABLE DOCUMENT

PT Freeport Indonesia, the giant copper- and gold-mining concern long targeted by environmentalists for allegedly irresponsible practices in the Irian Jaya province, promptly volunteered to be rated. "We think we're doing the right thing and have nothing to hide," Executive Vice President Paul Murphy said.

In coming months, Freeport will undergo an environmental audit, conducted by an outside firm chosen with government consultation. Sarwono has proposed that other major companies submit to voluntary audits every five years.

Seasoned observers here caution that Indonesia's environmental efforts may be limited. For the most part, the country's abundant national resources remain in the hands of an elite few, long cushioned from domestic and international criticism by political connections. And for all its professed good intentions, the government has relatively few resources to police this immense archipelago.

But overseas financial institutions may prove of assistance to the government. As Indonesian companies go offshore for capital, their environmental records are coming under increasing scrutiny.

Earlier this year, for example, PT Indah Kiat was fined for environmental violations at its pulp and paper plant in Sumatra. The parent firm, Sinar Mas Group, faced sharp questions from its American bankers.

Sinar Mas replied that an intermediary was responsible for the violation. "We have to practice good environmental management, insisted PT Indah Kiat's public relations officer, Purnama Kusumaningrat.

"We're under pressure," he said, noting that the company has dropped chlorine bleaching in favor of a less harmful method.

GRAPHIC: Photo, COLOR, The Indonesian government is cracking down with renewed vigor on polluting industries such as sulfur mining. FRANCOIS CHARTON / Black Star; Photo, COLOR, Manufacturers such as this batik factory are being urged to build waste water treatment plants. PAULA BRONSTEIN / Black Star

LANGUAGE: ENGLISH

LOAD-DATE-MDC: August 19, 1994

XIS·NEXIS LEXIS·NEXIS LEXIS·NEXIS
ces of Mead Data Central, Inc.
BEST AVAILABLE DOCUMENT

92ND STORY of Focus printed in FULL format.

Source: Reuter Textline
Bangkok Post

May 2, 1992

LENGTH: 349 words

HEADLINE: THAILAND: ELECTRICITY GENERATING AUTHORITY INVITES TENDERS FOR POWER SALE

BODY:

The Electricity Generating Authority of Thailand has began a process to allow private participation in the state-controlled utility industry.

The power agency has issued tender documents which spell out regulations and details involving the promotion of small power producers in Thailand and how the EGAT will buy their electricity output.

Essentially, such rights will go towards projects which generate electricity from renewable energy, waste or residual fuels and operate on a co-generation basis. Projects based on such fuels as oil, natural gas, coal and nuclear are not entitled to the rights.

According to an EGAT announcement, the maximum power which the EGAT will buy from small power producers under this round of tenders will be 300 megawatts, and the maximum capacity which a small producer can offer to the EGAT is 50 megawatts.

The producers are required to supply the electricity to the EGAT during the so-called peak months, when power demand is at its height. Such a period is from April to June, then September and October.

The power prices the EGAT pays to small producers depend on the nature of the supply contract "firm" or "non-firm" meaning whether the supply volume is fixed.

The EGAT offers a tariff of 85 satang a unit for electricity supplied on a firm basis for more than five years and 87 satang for non-firm supply for a period of not more than five years.

In the "firm" category, producers will receive a "capacity payment" from the EGAT that will help them shoulder the investment cost incurred in producing electricity. The "non firm" suppliers are not entitled to this payment.

Bidders have six months to submit tenders from yesterday. The deadline is October 31. The successful bidders will be announced 90 days later.

EGAT officials said whether these terms are attractive enough for private investors is not known. But Thursday's conference, held at the EGAT's headquarters to explain bidding terms, drew more than 100 potential bidders.

-

Bangkok Post, 2 May 1992, P20

XIS·NEXIS LEXIS·NEXIS LEXIS·NEXIS
ces of Mead Data Central, Inc.
BEST AVAILABLE DOCUMENT

LOAD-DATE-MDC: September 11, 1992

BEST AVAILABLE DOCUMENT

XIS·NEXIS LEXIS·NEXIS LEXIS·NEXIS
ces of Mead Data Central, Inc.

111

U.S. AGENCY FOR
INTERNATIONAL
DEVELOPMENT

Office of Energy and Infrastructure

Indonesia
Demand-Side Management

Volume II:
Electricity Pricing Incentives

BEST AVAILABLE DOCUMENT

reau for Research and Development
. Agency for International Development
Washington, D.C. 20523-1810

112

Report No. 92-07

A Report of the

Office of Energy and Infrastructure
Bureau for Research and Development
United States Agency for International Development

INDONESIA DEMAND SIDE MANAGEMENT
VOLUME II:
ELECTRICITY PRICING INCENTIVES

Final Report

Prepared for:

The Directorate General of Electricity and New Energy
Ministry of Mines and Energy
Jakarta, Indonesia

Prepared by:

RCG/Hagler, Bailly, Inc.
1530 Wilson Boulevard
Suite 900
Arlington, Virginia 22209
(703) 351-0300
HBI Reference No. 92-4256-372

Energy Policy Development and
Conservation Project, 936-5728
Energy Conservation Services Program
DHR-5728-Z-00-7014-00

October 1992

113

ABSTRACT

This report is the second volume of a two-volume study of demand-side management (DSM) in Indonesia. The report focuses on electricity pricing incentives for purchasing power from captive generators. PLN's (the national electric utility) electricity sales have been growing at 16.3% annually for the past 15 years. The ability to meet new capacity requirements is so constrained that many new industrial customers are being told they must supply their own power. At present, 42%, or 6,922 MW, of the installed capacity on Java and Bali is captive industrial generation. Very little power is currently purchased from these generators by PLN, although in many instances it represents a cost-effective means of meeting future peak demand needs.

The study begins by identifying the load management objectives for incentive pricing. The objectives were determined to be to reduce peak load on a daily basis during the period 1800 to 2200 hours. PLN's long-run marginal capacity and energy costs were estimated to establish the maximum purchase price based solely on economic considerations. Based on the load shape objectives, three DSM tariff options were analyzed: interruptible rates, buy back from PLN customers and buy back from non-PLN customers. Considering only captive diesel generation capacity of 5 MVA or more, the technical potential for these generators was estimated to be 792 MW in Java. The economic and market penetration potentials represent successively smaller subsets of this amount. They depend upon the power purchase tariff ultimately offered by PLN, the cost of self-generation specific to each generator as well as non-economic factors.

Analysis of PLN's long-run marginal cost and an analysis of the cost structure of a typical captive generator provided the basis for establishing a two-part incentive tariff design to purchase power during the peak periods. Two potential candidates for a pilot load management program were identified and it is recommended that such a pilot program be implemented to demonstrate and test the technical, economic, financial, and regulatory issues involved. Overall, the report stresses that development of a captive power purchase program be seen in the larger context of the development of a clear and equitable regulatory and policy framework for private power in general.

TABLE OF CONTENTS

EXECUTIVE SUMMARY S.1
- S.1 Background and Study Objectives S.1
- S.2 Economic Cost of Power Grid Supply S.3
- S.3 DSM Program Options S.4
- S.4 Incentive Tariffs S.6
- S.5 Pilot Load Management Project Pre-Feasibility S.9
- S.6 Development of a Framework for Private Sector Participation . . S.10

CHAPTER I: INTRODUCTION I.1
- 1.1 Background and Study Objectives I.1
- 1.2 Organization of Report I.4

CHAPTER II: POWER SECTOR OVERVIEW II.1
- 2.1 PLN System Characteristics II.1
- 2.2 System Expansion II.12
- 2.3 Load Shape Characteristics and Objectives II.16

CHAPTER III: ECONOMIC COST OF GRID POWER SUPPLY . III.1
- 3.1 LRMC for the Java-Bali Grid System III.1
- 3.2 Summary of Marginal Costs III.7

CHAPTER IV: PROGRAM OPTIONS, POTENTIAL, AND INCENTIVE STRUCTURE IV.1
- 4.1 DSM Program Options IV.1
- 4.2 Captive Power Generation Cost IV.5
- 4.3 Incentive Tariffs IV.10

CHAPTER V: PILOT LOAD MANAGEMENT PROJECT PRE-FEASIBILITY ANALYSIS V.1
- 5.1 Site Visits V.1
- 5.2 Engineering Design and Analysis V.2
- 5.3 Cost-Benefit Analysis V.10

CHAPTER VI: REFERENCES VI.1

EXHIBITS

S-1 Long-Run Marginal Capacity Costs
S-2 Marginal Energy Costs by Delivery Voltage
S-3 Peak Load Management Potential
S-4 Proposed Tariff Structure for Peak Load Management DSM Program

2-1 PLN Installed Capacity, Generation, Sales, and Losses
2-2 PLN'S Capacity and Generation Mix in 1990/91
2-3 PLN's Regional Operations, 1988/89
2-4 PLN's Sales and Consumer Growth
2-5 Regional Breakdown of Energy Sales
2-6 Energy Sales by Consumer Category
2-7 Historical Energy Sales of PLN by Consumer Category
2-8 Historical Data on Energy Sales, Java-Bali
2-9 Historical Data: Number of Customers, Java and Bali
2-10 Captive Generation: Estimated Installed Capacity and Mix
2-11 Generation Load Forecast, Base Case
2-12 Committed Projects and Commissioning Dates: Java-Bali System
2-13 Peak Day Load Curves
2-14 Normalized Average Workday Load Curves
2-15 Characteristics of Daily Load in Java and Bali System, 1991/92
2-16 Average Workday Load Curves
2-17 Sector Contribution to the Daily Load Curve, Java-Bali System, 1989/90
2-18 Load Curve Ratios by Subscribes: Java
2-19 Daily Load Curve, March 1990, Java-Bali and Jakarta
2-20 Adjusted Monthly Peak Load
2-21 Adjusted Monthly Energy Consumption

3-1 Long-Run Marginal Network Capacity Costs
3-2 Long-Run Generation Capacity Cost: Key Assumptions for Combustion Turbine
3-3 LRMC for Generation Capacity
3-4 Total Marginal Capacity Costs
3-5 Marginal Energy Costs by Plant Type
3-6 Marginal Energy Costs by Day Type
3-7 Marginal Energy Costs by Delivery Voltage
3-8 Incremental Energy Costs at Financial Prices for Fuel
3-9 Summary of Marginal Costs for Customers with Maximum Coincident Demand of 1 kW (1992$)
3-10 Summary of Marginal Costs for Customers with Maximum Coincident Demand of 1 kW (1992 Rp.)

3-11 Power Purchase Costs by Tariff Category

4-1 Installed Capacity of Diesel Captive Power in Indonesia: Companies with Total Installed Capacity of at least 5 MVA
4-2 Excess On-Peak Captive Generation Potential
4-3 Peak Load Management Potential
4-4 Typical Captive Power Plant Characteristics
4-5 Captive Power Generation Costs ($)
4-6 Captive Power Generation Costs (Rp.)
4-7 Unit Generation Costs for a Typical 1.6 MVA Medium-Speed Diesel Unit
4-8 Proposed Tariff Structure for Peak Load Management DSM Programs
4-9 Capacity Payments Received by Captive Power Supplies

5-1 Buy Back from Non-PLN Customer, Configuration 1: Integrated Scheme
5-2 Buy Back from Non-PLN Customer, Configuration 2: Dedicated Scheme
5-3 Buyback from Non-PLN Customer: Variant Dedicated Scheme
5-4 Configuration for Interruptible Option
5-5 Costs/Benefits Analysis of Case Study
5-6 Interconnection Costs in Rp./kWh Based on On-Peak Contract Capacity
5-7 Payments for Interconnection Costs Recovery
5-8 Time Line for Pilot Load Management Project

EXECUTIVE SUMMARY

S.1 BACKGROUND AND STUDY OBJECTIVES[1]

PLN's national energy sales increased from 2,444 GWh in 1974/1975 to 27,741 GWh in 1989/90, at an average growth rate of 16.3 percent. Over the same period, the number of customers showed an average annual growth rate of 16.2 percent.

These growth rates do not show signs of abating. The electrification ratio is still below 28 percent even in Java, the most heavily electrified island. Further, the per capita electricity generation, which is estimated to be about 250 kWh per year, is low when compared with other developing countries with similar or lower income levels.

In spite of such high growth rates, PLN has historically not been able to supply all industrial demand. Therefore, many industrial enterprises have installed captive generation plants. At present, captive generation capacity is estimated to be about 7,000 MW, of which about 3,200 MW are located on Java. On a national basis, captive generation accounts for approximately 42 percent of total installed capacity.

PLN projects load growth -- under the medium scenario -- at an annual rate of 12 percent in Java and 13 percent outside Java. In reality, these forecasts are best interpreted as supply forecasts. Because of resource constraints -- manpower and financial -- PLN has not only deferred the takeover of existing captive power in industry but is also signalling to potential new industrial customers seeking grid supply that such connections may not be forthcoming. Thus, the amount of captive generation plant in industry is expected to grow even more than at today's levels.

The capital requirements -- even for the managed demand growth case -- are estimated to be on the order of US $2+ billion a year, or US $25 billion through 2003/04, excluding price escalation and interest during construction. A substantial portion of this amount represents foreign exchange-related capital requirements.

Furthermore, the total national capital expenditures for electricity generation and network capacity are an order of magnitude higher than the US $25+ billion figure just noted, because this figure does not reflect capital expenditures that must be made by industry to expand captive generation capacity.

---

[1] The RCG/Hagler, Bailly team members responsible for undertaking this study (Arun P. Sanghvi, team leader and pricing economist, and Toan Ngyuen, utility load management engineer) would like to express their sincere gratitude for the cooperation and assistance received from DGENE and PLN staff throughout the conduct of this study.

Capital expenditures of such magnitude will impose a heavy burden (opportunity cost) on the economy, in that less capital investment will be available to the productive sector as well as for social development -- health, education, nutrition. Indeed, the news in recent months indicates that Indonesia has temporarily deferred some "mega" projects because of financial resource constraints.

Most immediately, however, the pressing problem facing PLN's Java-Bali grid operations, and that is projected to continue for the mid-term, is the potential inability to meet peak load for the four+ hours that define the evening system peak hours on weekdays.

It is vital, therefore, that PLN leave no stone unturned to ensure that it pursues a least-cost expansion strategy for the power sector. A critical dimension of such a resource development strategy, and one that has gained significant ground in the U.S. during the last decade, is demand-side management (DSM). DSM involves actions taken by the utility, such as customer energy end-use efficiency improvement and load control -- direct load control as well as indirect load modulation via a tariff design -- that are cost-effective when compared with the cost of supply-enhancing measures that would be required, absent the change in customer consumption levels and/or patterns.

With this as background, the specific *objectives of this report* are to:

- review relevant and available information on PLN's Java-Bali grid system with a view to identifying priority objectives for load management and incentive pricing mechanisms for achieving such objectives
- review PLN's most recent long-run marginal cost study and adjust it as appropriate to develop up-to-date estimates of the economic cost of grid supply
- review PLN's existing tariffs in light of the economic cost structure and recommend incentive pricing schemes that can be offered as an optional basis to achieve the desired customer response
- examine the potential for using existing captive generation capacity as a load management strategy
- conduct a prefeasibility analysis for a pilot load management project centered around the concept of utilizing existing captive power generating capacity.

This report is the second of a two-volume study on demand-side management (DSM) in Indonesia. Volume I of this set presents an action plan for Indonesia to begin establishing a DSM program.

S.2 ECONOMIC COST OF POWER GRID POWER SUPPLY

Estimates of the long-run marginal cost of supply (LRMC) for the Java-Bali grid system were developed in the study and are summarized in Exhibits S-1 and S-2.

To illustrate, Exhibit S-1 shows that the marginal cost for PLN to supply incremental demand of 1 kW at medium voltage (MV) is Rp. 11.97/ckW-mo, of which amount, Rp. 6.98/ckW-mo represents generation capacity cost and the balance is accounted for by the network capacity.

Exhibit S-1
Long-Run Marginal Capacity Costs
(1992 $/ckW-mo)[1]

Delivery Voltage	Generation Capacity	Network Capacity			Total
		HV	MV	LV	
HV	6.39	0.67	--	--	7.06
MV	6.98	0.72	4.27	--	11.97
LV	8.81	0.85	5.07	8.57	23.30

[1] ckw denotes coincident kW.

Marginal energy costs are shown in Exhibit S-2. For example, a unit of incremental energy supplied on-peak at MV has an economic cost of 6.17¢/kWh, whereas incremental off-peak supply has an economic cost of 3.68¢/kWh.

Exhibit S-2
Marginal Energy Costs By Delivery Voltage
(¢/kWh)

Delivery Voltage	Peak	Off-Peak
Busbar	5.42	3.33
HV	5.65	3.44
MV	6.17	3.68
LV	7.78	4.40

The significance of these numbers is that if PLN can buy energy, and capacity from captive power plants, its opportunity cost -- i.e., PLN's maximum willingness to pay based on economic considerations solely -- are the estimates shown in Exhibits S-1 and S-2, net of any interconnection costs.

S.3 DSM PROGRAM OPTIONS

Based upon a careful review of available information, the following peak load management program in the near- to mid-term is recommended:

- a DSM program to "purchase" daily, excess capacity from captive power generators during the peak hours: 18:00 p.m. to 22:00 p.m.

The proposed DSM program comprises three options:

- **Interruptible:** Under this option, PLN would interrupt service during peak hours to customers who sign up for the program. Such customers could meet their load from excess self-generation capacity, if they so chose.

- **Buy Back from PLN's Customers:** Under this option, PLN would purchase excess capacity from captive power generators during the peak hours.

- **Buy Back from Non-PLN Customers:** Under this option, peaking capacity would be purchased from captive power generators owned by electricity consumers who are currently not PLN customers.

Program Potential

Estimates of program potential were derived utilizing information from PLN's captive power database for industries with installed captive diesel generation capacity of at least 5 MVA.[2]

Exhibit S-3 summarizes the peak load management potential by each of the three DSM options. A total (technical) potential of 792 MW is estimated in Java; 123 MW can be tapped through an interruptible service program. In addition, 318 MW of on-peak capacity can potentially be purchased from existing PLN customers, and the potential exists for purchasing another 336 MW of peaking capacity from non-PLN customers.

[2] Since the focus of this analysis is on peak load management, only diesel generators were considered because of their quick start-up ability. Steam generators were not considered because their start-up time is substantially longer than diesel generators.

To illustrate, consider the estimate of interruptible load in Exhibit S-3. This was derived as follows. For PLN customers whose load is lower than their captive installed capacity, as per the data base, the connected load is viewed as interruptible since in the event all supply is interrupted, the customer can self-generate to meet load. In addition, the surplus captive capacity (installed less load) can be purchased by PLN under the buyback option. It is relevant to note that the estimate of interruptible load in Exhibit S-3 understates the true potential in that it does not include actual load interruption potential by the customer rescheduling plant operations.

Exhibit S-3
Peak Load Management Potential

Option	Region	MW	On-Peak Generation (MWh/Year)
1. Interruptible	East Java	50	87,600
	Central Java	11	16,060
	West Java	29	42,340
	Jaya & Tangerang	38	55,480
	Subtotal	138	201,480
2. Buy Back Option # 1: PLN's Customers > 10 MVA	East Java	128	186,880
	Central Java	38	55,480
	West Java	60	87,600
	Jaya & Tangerang	92	134,320
	Subtotal	318	464,280
3. Buy Back Option #1: Non-PLN Customers >10 MVA	East Java	0	0
	Central Java	81	118,260
	West Java	189	275,940
	Jaya & Tangerang	66	96,360
	Subtotal	336	490,560
	Total	792	1,156,320

S.4 INCENTIVE TARIFFS

The pricing framework proposed later in this section draws upon the economic theory of efficiency pricing as the primary guiding philosophy. Based upon the analysis of PLN's long-run marginal cost, and an analysis of the indicative cost structure of captive generation (Chapter 4), a two-part incentive tariff structure is proposed to "purchase"[3] captive power generation, especially during peak hours, under the proposed incentive tariffs in Exhibit S-4. It should be noted that the tariff structure in Exhibit S-4 emphasizes economic efficiency considerations. The direct application of this tariff -- in the case of a firm contract where even the minimum suggested capacity payment in Exhibit S-4 is offered -- will require upward adjustments to PLN's current system-wide average tariff yield of Rp. 135/kWh, as discussed further subsequently. If such financial adjustments are not forthcoming, then the capacity payments in Exhibit S-4 will need to be lowered accordingly.

In the case of a non-firm power purchase, the purchase price is significantly higher than the seller's variable cost of supply, and should provide adequate financial incentives for participation in the program (e.g., a 5 MVA customer on Tariff I-4 will save nearly 8 percent of his monthly electricity bill per equivalent MW of non-firm energy provided to the grid on-peak). The analysis in Chapter 3 of this report reveals that the variable cost of generation for captive plant of the type likely to participate in the proposed program is around Rp. 70/kWh. Thus, any payments received in excess of this amount will help cover the generator's fixed cost.

For firm power purchases, Exhibit S-4 indicates that in addition to energy payments, the seller should receive a capacity-related payment as well. At this stage, it is recommended that this component of the payment be negotiated by PLN with the seller. The primary reason for this approach is grounded in the fact that the capacity and related costs of self-generation tend to vary substantially and are customer-specific.[4] Therefore, the suggested strategy of negotiation, with lower capacity payments being given initially and progressively increasing capacity payments in later stages of the program, will simulate a market-based "bidding process" that orders supplies over time in order of increasing resource acquisition cost. This will help provide an economically efficient ordering of the power purchases secured, and with no one receiving a payment that equals or exceeds full avoided cost other than the marginal -- i.e., highest-cost -- captive generation resource selected.

The intent underlying the negotiated payment recommendation for capacity valuation is that PLN attempt to first secure the lowest-cost supplies and as these are exhausted, move up the

[3] The purchase may involve a supply of captive power to the grid via an interconnection, or may simply be accomplished by a reduction in demand imposed on the grid, with the demand reduction met by captive power generation.

[4] They depend upon unit size, performance characteristics, existing levels of utilization, etc.

Exhibit S-4
Economic Tariff Structure for Peak Load Management DSM Programs

Contract	Voltage	Tariff Component	Peak	Off-Peak
1. Non-Firm Purchase	HV	Energy (Rp./kWh)	116	71
		Capacity (Rp./ckW-mo.)	--	--
2. Firm Purchase	HV	Energy (Rp./kWh)	116	71
		Capacity (Rp./ckW-mo.)	Minimum Suggested: 3,637 Maximum: 14,546	--
1. Non-Firm Purchase	MV	Energy (Rp./kWh)	127	76
		Capacity (Rp./ckW-mo.)	--	--
2. Firm Purchase	MV	Energy (Rp./kWh)	127	76
		Capacity (Rp./ckW-mo.)	Minimum Suggested: 6,156 Maximum: 24,624	--
1. Non-Firm Purchase	LV	Energy (Rp./kWh)	160	91
		Capacity (Rp./ckW-mo.)	--	--
2. Firm Purchase	LV	Energy (Rp./kWh)	160	91
		Capacity (Rp./ckW-mo.)	Minimum Suggested: 11,998 Maximum: 47,993	--

* To be structured in equivalent Rp./ckWh terms. See text for explanation.
Exchange rate: 20-to-1.

supply curve to higher-cost supplies. For example, in the early stages, PLN should attempt to register those participants and secure capacity from those self-generators who are willing to accept, say, 25 percent of the full avoided capacity cost. Once supply from these generators is exhausted, the capacity value in the tariff could be increased to, say, 50 percent of the full avoided capacity cost, with increases thereafter at appropriate times. Ultimately, it is in PLN's self-interest to pay up to the full avoided capacity cost,[5] if necessary, to secure on-peak firm power purchases. However, it is not necessary, or to the financial advantage of PLN and its ratepayers, to pay full avoided capacity cost to participants who would "come to the table," even if this capacity payment is lower than this maximum.

To illustrate the financial incentive under a capacity value of Rp. 6,156/ckW-mo. (i.e., 25 percent of full avoided capacity cost), consider again the example before wherein a 5 MVA contract demand customer offers to sell 1 MW of firm capacity on-peak. In this case, the captive power seller will receive an additional benefit of Rp. 12,321,000/month, for a total bill reduction of nearly 11 percent each month. As a percentage of the company's profit margin, this would typically represent a much higher amount.

Financial Implications for PLN

PLN's projected tariff yield for the system, i.e., billed revenue per unit of billed sales, averaged over all tariff categories, is approximately Rp. 135/kWh. By comparison, the power purchase tariffs proposed in Exhibit S-4 are higher for firm purchases, even under the minimum suggested capacity payment. For example, under the minimum suggested capacity payment of Rp. 6,156/ckW-mo. at HV, the effective cost of a firm purchase to PLN would be Rp. 178/kWh.[6] By contrast, PLN is only collecting Rp. 135/kWh, system-wide. Thus, large-scale implementation of the proposed DSM program will result in revenue erosion and deterioration of PLN's financial performance.

To avert this situation, as well as remove this disincentive for PLN, it is necessary that the costs of the power purchase, and other program costs incurred by PLN, in excess of the system-wide average tariff yield of Rp. 135/kWh, be treated as a legitimate cost in PLN's cost structure. PLN should recover these costs, as it does all other legitimate costs (fuel, salaries, investment, A&G, etc.), by adjusting its tariff yield of Rp. 135/kWh upward.[7]

---

[5] Net of any transaction costs, e.g., if PLN incurs the capital cost for interconnection, then these costs, which are really the responsibility of the seller, must be recovered from the seller.

[6] [6,156 Rp./121.6 peak kWh per month] + Rp. 127/kWh.

[7] Clearly, PLN would be allowed to make this adjustment if additional peaking generation is built as a substitute for the power purchase from the captive generator.

S.5 PILOT LOAD MANAGEMENT PROJECT PRE-FEASIBILITY

Two potential candidates for a pilot load management project involving on-peak power purchases from captive generators were identified. In close consultation with PLN, several potential candidates were initially screened, and two cement plants were identified for site visits. Of the two plants selected, one is a PLN customer, whereas the other is not a PLN customer.

The overall conclusion that emerged from the site visits and discussion with the plant facilities managers at the two plants indicated that given a favorable on-peak purchase tariff, PLN may be able to acquire up to 25 MW of on-peak power. This would be accomplished by: 1) providing a connection between the PLN grid and the non-PLN customer to purchase up to 20 MW of on-peak power and 2) interrupting approximately 5 MW of the manufacturing plant load that is a customer of PLN.

Next Steps

Chapter 5 describes the pre-feasibility analysis, and contains technical recommendations for configuring the interconnection. A cost-benefit analysis indicates that it is economical for PLN to purchase excess power from the captive power producers to serve PLN's system demand during the on-peak hours of 18:00 p.m. to 22:00 p.m. instead of adding peaking generating capacity.

Today, there are many captive power generators who do not seem to be interested in engaging in such a program at any price. Therefore, the basic concept needs to be demonstrated and marketed more aggressively. It is recommended that a pilot load management project be implemented so that a detailed study of the economic benefits and demonstration of technical feasibility of using captive power to serve PLN's on-peak load can be achieved. This pilot project will also enable PLN to "fine tune" the purchase tariffs for a broader implementation of the proposed DSM program concepts for peak load management. The project should take approximately 12 months to complete.

This report is part of a broader effort to chart a course towards the more efficient use of electricity in Indonesia through DSM. A companion report, *An Action Plan for Demand-Side Management in Indonesia*, presents an overall strategy for DSM in Indonesia, including a possible course of action. The associated costs and benefits of the plan -- a component of which is the pilot load management project developed in this report -- are presented in the companion document in sufficient detail to provide a basis for follow-on funding from donor agencies and the Indonesian Government.

BEST AVAILABLE DOCUMENT

S.6 DEVELOPMENT OF A FRAMEWORK FOR PRIVATE SECTOR PARTICIPATION

The DSM program for peak load management that is the focus of this report essentially involves the purchase of power from the private sector. Therefore, the design and implementation of this program should be consistent with the principles and framework that more broadly guide the development of the "private power market" in Indonesia. A recently completed study under USAID funding [7][8] represents a step in that direction. It proposes a framework and implementable methodology for rationalizing the pricing of a range of power purchase transactions that PLN potentially can engage in, including the transactions that are the focus of this report.

However, the success as regards the efficient and sustainable development of the private power program in general and the captive power purchase program in particular will hinge critically upon the GOI creating and implementing a market transactional structure and environment in which the rules of the game -- economic, regulatory, oversight, contractual, financial, and legal recourse -- are clearly defined and transparent, fair and equitable, and provide efficient, unambiguous, strong signals to all potential entrants (sellers) as regards the potential risks and rewards.

Since the enactment of the Law on Power Sector in 1985 and especially within the last two years with the creation of the "Private Power Team" in the Directorate General for Electricity and New Energy (DGENE), a beginning has been made. However, considerably more work remains in defining and clearly articulating the policy framework in detail, including pricing principles and mechanisms, the institutional and regulatory framework, standardized contract documents, and a host of other issues related to project and contractor selection, project financing, risk sharing, and guarantees and commercial details.

BEST AVAILABLE DOCUMENT

[8] Numbers in brackets denote references in Chapter 6.

CHAPTER I: INTRODUCTION

1.1 BACKGROUND AND STUDY OBJECTIVES

PLN's national energy sales increased from 2,444 GWh in 1974/75 to 27,741 GWh in 1989/90, at an average annual growth rate of 16.3 percent. Over the same period, the number of customers showed an average annual growth rate of 16.2 percent. Comparable growth rates have been achieved in Java.

PLN's record in achieving a high connection rate for new customers is remarkable. Over the decade 1979/80 to 1989/90, PLN added over 8 million new customers, or over 800,000 connections per year. In spite of this impressive record, the potential for electricity sales growth in the future remains high.

For one, the electrification ratio is still below 28 percent even in Java, the most heavily electrified island. Further, per capita electricity generation, which is estimated to be about 250 kWh per year, is low when compared with other developing countries with similar or lower income levels.

Indeed, load is projected to grow at an annual rate of about 12 percent in Java under the medium scenario. PLN forecasts are best interpreted as supply forecasts and not demand forecasts. Because of resource constraints on PLN -- manpower and financial -- the electrification ratio of substantially below 100 percent will prevail throughout the end of the forecast horizon. In addition, PLN has reduced, if not completely deferred, for a four-year period, the takeover of captive power in industry. The latter capacity is projected to rise significantly in the decade because of PLN's inability to meet new demand, let alone the takeover of existing capacity.

PLN's least-cost generation expansion program, under the medium growth scenario, beyond the committed plant, consists of the following major additions (12,000 MW) by the year 2003/2004:

- 3,200 MW of coal-steam at Paiton (units 5 through 8)
- 4,200 MW of coal-steam in Central Java (7 x 600 MW)
- 1,800 MW of coal-steam in West Java (2 x 600 MW)
- 1,500 MW of coal-steam in East Java (3 x 500 MW)
- 960 MW of gas turbines (8 x 120 MW)
- 570 MW of hydro.

The capital requirements for the national power development plan -- generation and network -- are estimated to be on the order of US $2+ billion per year, or US $25 billion through 2003/04, excluding price escalation and interest during construction. A substantial portion of this represents foreign exchange-related requirements.

BEST AVAILABLE DOCUMENT

In reality, the total national capital expenditures for electricity generation and network capacity are an order of magnitude greater than the US $25+ billion figure just noted, because this figure does not reflect capital expenditures that must be made by industry to expand captive generation capacity.

Capital expenditures of such magnitude will impose a heavy burden (opportunity cost) on the economy, in that less capital investment will be available to the productive sector as well as for social development -- health, education, nutrition. Indeed, within the last year the Government of Indonesia (GOI) has temporarily deferred some "mega" projects because of insufficient financial resources.

It is thus vital that PLN leave no stone unturned to ensure that it pursues a least-cost expansion strategy for the power sector. A critical dimension of such a resource development strategy, and one that has gained significant ground in the U.S. during the last decade, is demand-side management (DSM), which is also sometimes referred to as demand management.

PLN also recognizes the importance of pursuing DSM more aggressively. DSM involves actions taken by the electric utility to help consumers make energy end-use efficiency improvements and implement load management-enhancing measures that would be cost-effective, but would not be undertaken absent the DSM program.

Demand management can be defined as the deliberate control or influencing of customer electrical loads (levels and time-of-use patterns). The ultimate goal of demand management is to lower the average cost of electricity. To realize this goal, customer load shapes must be altered to bring about an improvement in load factors, a reduction in the need for peaking capacity, and higher utilization of more efficient baseload generation.

Broadly speaking, there are two classes of strategies for carrying out load management: direct load control and indirect load control.[1] Direct load control involves the physical on-and-off switching of end-use devices/loads by the utility. Indirect load control involves customer control of loads in response to price signals and is the primary focus of this report. The most common examples of indirect load control are:

- demand charge tariffs, where billing demand is measured coincident with system peak
- time-of-use (TOU) tariffs
- interruptible tariffs
- incentive buy-back rates
- dynamic tariffs.

[1] A third approach is energy storage.

BEST AVAILABLE DOCUMENT

Simple demand charge tariffs do not provide a sufficiently strong signal for customers to shape their load in accordance with overall demand management objectives. Clearer and strong signals for load modification are provided by coincident demand charges and more generally, by time-of-day (TOD) or TOU tariffs.

Time-of-use (TOU) tariff options can provide substantial financial incentives for load reduction on-peak as well as load shifting. Low load factor customers can realize bill savings primarily by virtue of the capacity price differentials, whereas high load factor customers can realize such savings through the capacity as well as energy price differentials. The differential between peak and off-peak period energy price essentially reflects the cost differences associated with the marginal generating units that would typically be required to provide incremental power supplies in those periods. In addition, to the extent losses tend to be a quadratic function of load, costs are higher during peak hours.

Interruptible service (IS) is a demand-side option that is widely used and accepted by electric utilities and utility customers in many countries. Interruptible service allows a utility to interrupt load to a customer in accordance with specified provisions. For this privilege, the utility reduces the customer's bill by a specified amount each month. In regard to the daily operations of generation facilities, IS improves reliability and operating flexibility. In the longer term, IS allows the utility to build less generating capacity. A well designed IS tariff provides substantial benefits to both the utility and the customer.

Under an IS tariff, the customer contracts with the utility for an amount of load the customer is willing to remove from the system when requested to do so. This load is then considered to be non-firm. This tariff specifies an advance notice period that may be as long as 24 hours to as little as 15 minutes. While the utility may, in some cases, have direct control over the customer's load, most often the interruption is triggered by a phone call from the utility to the customer. This requires a constantly manned, dedicated phone line to ensure timely communication. Special metering equipment that records usage on a continuous basis is also required to ensure compliance with the magnitude and time of requested interruption. An interruptible tariff is particularly well suited for customers who have standby generation capacity available.

Incentive buy-back rate programs are geared to the purchase of power from those customers who have on-site generation, in order to help meet the utility's load management objectives -- typically, peak shaving. This type of tariff design is based upon establishing a power purchase tariff that provides a financial incentive for the customer to engage in the transaction -- i.e., the tariff should be higher than the customer's cost of self-generation, and simultaneously, does not exceed the utility's avoided cost.

Dynamic pricing refers to tariffs that have one or more parameters which are determined on a "real time" basis. In contrast to the classical TOD or TOU tariffs that are based upon the utility's long-run marginal cost structure, dynamic pricing is based upon the short-run

BEST AVAILABLE DOCUMENT

marginal cost structure. Dynamic tariffs are typically offered on an optional basis to large customers that have the response capability to react to such tariffs to the mutual benefit of themselves and the utility.

Objectives

The objectives of this report are to:

- review relevant and available information on PLN's Java-Bali grid system with a view to identifying priority objectives for load management and incentive pricing mechanisms for achieving such objectives
- review PLN's most recent long-run marginal cost study and adjust it as appropriate to develop up-to-date estimates of the economic cost of grid supply
- review PLN's existing tariffs in light of the economic cost structure and recommend incentive pricing schemes that can be offered as an optional basis to achieve the desired customer response
- examine the potential for using existing captive generation capacity as a load management strategy
- conduct a prefeasibility analysis for a pilot load management project centered around the concept of utilizing existing captive power generating capacity.

1.2 ORGANIZATION OF REPORT

This report is organized as follows. Chapter II presents a review of relevant and available information on customer electricity usage characteristics and patterns, and concludes with an assessment of the load shape objectives of high priority to PLN with respect to the Java-Bali grid.

Chapter III develops estimates of PLN's economic cost of supply at various delivery points on its Java grid system. This provides the basis for evaluating the existing tariffs vis-a-vis their effectiveness in helping achieve the load management objectives identified in Chapter II. Recommendations for optional incentive pricing schemes are presented as well.

Chapter IV focuses on the potential for utilizing existing captive power installed capacity as a load management program. It establishes the technical and economic potential of such a program; the latter under different incentive mechanisms. Finally, Chapter V contains a prefeasibility analysis of a pilot load management project at two specific sites based upon the utilization of captive power generation as a load management option.

BEST AVAILABLE DOCUMENT /31

CHAPTER II: POWER SECTOR OVERVIEW

Section 2.1 of this chapter presents an overview of historical information about the PLN system that is of relevance to the task at hand. Section 2.2 reviews the limited available information that sheds insights on the broad characteristics of electricity usage patterns. Finally, Section 2.3 establishes the load management objectives of relevance for PLN's grid system into the foreseeable future.

2.1 PLN SYSTEM CHARACTERISTICS

The National Electricity Authority of Indonesia, PLN, was legally established in 1972 as a public corporation under Presidential Decree No. 18, elevating its earlier status as a department of the Ministry of Public Works and Electric Power. PLN is responsible for the generation, transmission, and distribution of electricity as well as the planning, construction, and operation of facilities required to provide electricity. Beginning in the early 1980s, the Ministry of Mines and Energy (MME), through the Directorate General of Electricity and New Energy (DGENE), has granted licenses to a few rural electric cooperatives to generate and distribute power in areas not connected to PLN's network. In addition, during the late 1970s and early 1980s, because PLN was unable to meet a significant portion of industrial demand, a large number of such establishments were given permits by MME and installed captive generation plant to meet their electricity needs.

With a share of almost 60 percent in the country's total power generation and about 55 percent of national installed capacity, PLN has the dominant role in the sector. Specifically, the ownership of generation is distributed as follows:

- the government-owned PLN with an installed capacity of about 8,800 MW as of October 1990, of which 6,300 MW are connected to the Java-Bali grid
- a large number of captive plants (approximately 10,000) installed and operated by industries for their own use (6,700+ MW); of this capacity, more than 45 percent is located in Java
- a small number of electric cooperatives in rural areas (about 20 MW).

BEST AVAILABLE DOCUMENT

Installed Capacity and Mix

Exhibit 2-1 indicates that as of the end of fiscal year 1990/91 (March 31, 1991), PLN had a total installed capacity of 9,275 MW.[1] Energy generation of 34,012 GWh supported final sales of 27,741 GWh. The system-wide annual load factor has hovered around 65 percent in recent years. Network losses for the most recent year for which data were available were around 17 percent of gross generation and 18 percent of net generation.

Exhibit 2-2 provides a breakdown of the generation capacity mix, which can be seen to be predominantly (55 percent) oil based. However, the present situation represents a considerable improvement over the situation in the 1970s and early 1980s. Since that time, substantial amounts of coal-fired generating capacity have been commissioned, consisting of the 4 x 400 MW oil-fired Suralaya units (commissioned in August 1984, June 1985, February 1989, and November 1989, respectively). In addition, during 1985 and 1989, respectively, the hydro plants at Saguling (700 MW) and Cirata (500 MW) were commissioned.[2] As a consequence, during FY 1990/91, oil-fired plants accounted for 46 percent of total generation (compared with 75 percent four years ago), while coal- and gas-fired plants had a combined share of 27 percent. Twenty-four percent was derived from hydropower and geothermal plants, and the remaining 3 percent was purchased.

Regional statistics on power system operation shown in Exhibit 2-3 indicate that PLN's operations are concentrated in Java, which accounts for over three-fourths of total capacity, generation, and sales, and two-thirds of all customers.

Power Market

PLN's national energy sales increased from 2,444 GWh in 1974/75 to 27,741 GWh in 1989/90, at an average growth rate of 16.3 percent. Over the same period, the number of customers showed an average annual growth rate of 16.2 percent.

---

[1] In addition, PLN purchased 265 MW from three large captive plants, namely, the Asahan and Juanda hydropower stations and the Krakatau steam power plant.

The high operating capacity margins – on the order of 45 percent – appear to reflect PLN's operating environment: a substantial amount of capacity derating of older generating units coupled with the reality that PLN is responsible for operating over 600 isolated power systems over the entire archipelago.

[2] Three large existing oil-fired power plants with a combined installed capacity of about 1,600 MW are also being converted to natural gas, and about 30 old medium-sized hydropower, steam, and diesel power plants are under rehabilitation. All of these measures are intended to reduce PLN's dependance on oil-fired generation. Finally, the implementation of the EHV transmission lines in Java (almost completed) and the establishment of interconnected grids in Sumatra (planned) and Bali (ongoing) will allow a more economic operation of the new large power generating units.

BEST AVAILABLE DOCUMENT

Exhibit 2-1
PLN Installed Capacity, Generation, Sales, and Losses

Fiscal Year	Installed Capacity			Peak Demand **	Capacity Margin		Energy Generation ++	Station Use		T&D Losses		Energy Sales	Load Factor	No. Consumers	Connected Load
	PLN	Pur.	Total												
	MW	MW	MW	MW	MW	% +	GWh	GWh	% †	GWh	% †	GWh	%	10^3	MVA
1974/75	922	100	1,022	602	420	41.1	3,345	96	2.8	807	24.1	2,444	63.4	1,806	1,253
1975/76	1,129	100	1,229	638	591	48.1	3,770	106	2.8	861	22.8	2,804	67.5	1,141	1,426
1976/77	1,377	100	1,477	734	743	50.3	4,127	114	2.8	932	22.6	3,082	64.2	1,209	1,594
1977/78	1,863	100	1,963	835	1,128	57.5	4,725	137	2.9	1,061	22.5	3,527	64.6	1,413	1,934
1978/79	2,288	100	2,388	1,033	1,355	56.7	5,723	186	3.3	1,250	21.8	4,287	63.2	1,784	2,449
1979/80	2,536	100	2,636	1,276	1,360	51.6	7,004	358	5.1	1,303	18.6	5,343	62.7	2,247	3,063
1980/81	2,555	260	2,815	1,577	1,238	44.0	8,420	343	4.1	1,517	18.0	6,560	61.0	2,745	3,744
1981/82	3,032	285	3,317	1,876	1,441	43.4	10,138	395	3.9	1,898	18.7	7,845	61.7	3,232	4,503
1982/83	3,406	285	3,691	2,285	1,406	38.1	11,846	528	4.5	2,217	18.7	9,101	59.2	4,406	5,270
1983/84	3,935	285	4,220	2,413	1,807	42.8	13,392	580	4.3	2,812	21.0	10,000	63.4	5,135	6,127
1984/85	4,515	265	4,780	2,715	2,065	43.2	14,777	694	4.7	3,042	20.6	11,041	62.1	5,133	7,122
1985/86	5,635	265	5,900	2,966	2,934	49.7	16,899	855	5.1	3,338	19.7	12,706	65.0	5,953	8,150
1986/87	6,200	265	6,465	3,403	3,062	47.4	19,455	855	4.4	3,814	19.6	14,786	65.3	6,966	9,282
1987/88	7,237	265	7,502	3,890	3,612	48.1	22,306	1,051	4.7	4,178	18.7	17,077	65.5	8,203	10,711
1988/89	8,529	*265	8,794	4,497	4,297	48.9	25,623	1,269	4.9	4,327	16.9	20,027	65.0	9,276	12,234
1989/90	9,088	265	9,353	--	--	--	29,567	--	--	--	--	23,435	--	10,312	13,951
1990/91	9,275	265	9,540	--	--	--	34,012	--	--	--	--	27,741	--	--	--

Source: Reference [1] and PLN.

* 125 MW from the Juanda Hydropower Station, 90 MW from Krakatau Steel Steam Power Station in West Java, and 50 MW from the Asahan Hydropower Station in North Sumatra

** Arithmetic sum of not necessarily coincident peak demands in the individual systems

\+ As percentage of installed capacity (not reserve margin)

\+ + Including purchase

† As percentage of gross energy generation

BEST AVAILABLE DOCUMENT

Exhibit 2-2
PLN's Capacity and Generation Mix in 1990/91

Plant Type	Fuel	Installed Capacity		Energy Generation	
		MW	%	GWh	%
Steam	Oil	2,081	22	10,284	30
	Coal	1,730	18	10,910	31
	Gas	130	1	235	1
Gas Turbine		1,230	13	2,175	6
Diesel	Oil	1,870	20	3,608	10
Hydropower	-	2,095	22	5,675	16
Geothermal	-	140	1	1,125	3
Purchase	-	265	3	856	3
Total		9,541	100	34,868	100

Source: PLN.

The data in Exhibit 2-4 reveal that the overall sales growth was caused by the increase in the number of connections rather than in average usage per customer. Indeed, the slight drop in average usage is a result of expanded rural electrification program coverage.

Exhibit 2-3
PLN's Regional Operations, 1988/89

	Java	Outside Java	Total
Installed Capacity (MW)*	6,201	2,593	8,794
Peak Demand (MW)	3,372	1,125	4,497
Energy Generation (GWh)**	20,066	5,557	25,623
Energy Sales (GWh)	15,692	4,335	20,027
Energy Losses (%)***	21.8	22.0	21.8
Annual Load Factor (%)	67.9	56.4	65.0
Number of Customers (million)	6.2	3.1	9.3

* Including a purchase of 265 MW
** Including a purchase of 683 GWh
*** As percentage of energy generation, including power station use

BEST AVAILABLE DOCUMENT

It is interesting to note that the GDP growth over the period 1975/75 to 1988/89 was 8.1 percent per year. This implies an extremely high "income elasticity" of electricity demand at 2.7.

The data also show (Exhibit 2-5) that PLN's sales in Java have traditionally represented the overwhelming share of national sales (on the order of 80 percent), but that this share has shown a declining trend because of the emphasis on the electrification of other islands. Further, the data reveal that sales growth rates have been marginally higher outside Java.

Exhibit 2-6 indicates consumption shares by major consuming categories. The residential share of consumption has fallen from 48 percent in 1974/75 to 32 percent of all sales in 1990/91. At present, industry's consumption share of total PLN sales is the highest at 51 percent. Further, sales to industry have risen at the fastest rate (20.0 percent) and well over the average system-wide sales growth rate of 16.2 percent (Exhibit 2-7).

PLN's record in achieving a high connection rate for new consumers is remarkable. Over the decade 1979/80 to 1989/90, PLN added over 8 million new customers, or over 800,000 connections per year. In spite of this impressive record, the potential for electricity sales growth in the future remains high.

For one, despite the record noted above, the electrification ratio is still below 28 percent even in Java, the most heavily electrified island. Further, the per capita electricity generation, which is estimated to be about 250 kWh per year, is low when compared with other developing countries with similar or lower income levels.

Exhibits 2-8 and 2-9 present, respectively, historical data on energy sales and customer accounts by consumer classes for the Java-Bali grid system. In many respects, the Java-Bali system data -- e.g., growth rates, energy shares -- largely parallel the characteristics of PLN's national sales data discussed earlier. However, average system consumption in the Java-Bali system is higher than the national average (2,609 kWh/consumer in 1989/1990 for Java-Bali versus the national average of 2,217 kWh/consumer). Furthermore, the average sales per account has increased significantly on the Java-Bali system (2,818 kWh/account in 1990/91 versus 2,408 kWh/account in 1986/87) in contrast to the national average consumption per account over the same period (Exhibit 2-4). This increase has occurred despite the fact that average residential consumption in the Java-Bali system has declined over the period 1986/87 - 1990/91 (1,051 kWh/household down to 906 kWh/household), signalling strong industrial demand.

BEST AVAILABLE DOCUMENT

Exhibit 2-4
PLN's Sales and Consumer Growth

Fiscal Year	Energy Sales		No. of Customers		Average Consumption	
	GWh	% p.a.	'000	% p.a.	kWh/con.	% p.a.
1974/75	2,444		1,086		2,250	
1975/76	2,804	14.7	1,141	5.1	2,457	9.2
1976/77	3,082	9.9	1,209	6.0	2,549	3.7
1977/78	3,527	14.4	1,413	16.9	2,496	(2.1)
1978/79	4,287	21.5	1,784	26.3	2,403	(3.7)
1979/80	5,343	24.6	2,247	26.0	2,378	(1.0)
1980/81	6,560	22.8	2,745	22.0	2,390	0.5
1981/82	7,845	19.6	3,232	17.7	2,427	1.5
1982/83	9,101	16.0	3,802	17.6	2,394	(1.4)
1983/84	10,000	9.9	4,406	15.9	2,270	(5.2)
1984/85	11,041	10.4	5,133	16.5	2,151	(5.2)
1985/86	12,706	15.1	5,953	16.0	2,134	(0.8)
1986/87	14,786	16.4	6,966	17.0	2,123	(0.5)
1987/88	17,077	15.5	8,203	17.8	2,082	(1.9)
1988/89	20,027	17.3	9,276	13.1	2,159	3.7
1989/90	23,435	17.2	10,317	11.2	2,217	5.2
1990/91	27,741	18.4	--	--	--	--
Average						
74/75 - 89/90	--	16.3	--	16.2	--	0.0
74/75 - 79/80	--	16.9	--	15.7	--	1.1
79/80 - 84/85	--	15.6	--	18.0	--	(2.0)
84/85 - 89/90	--	16.2	--	15.0	--	1.1

Source: PLN.

BEST AVAILABLE DOCUMENT

Exhibit 2-5
Regional Breakdown of Energy Sales

Region	1974/75		1988/89		Average Growth Rate % p.a.
	GWh	%	GWh	%	
Java	1,988	81	15,692	78	15.9
Outside Java	456	19	4,335	22	17.5
Total	2,444	100	20,027	100	16.2

Source: PLN.

Exhibit 2-6
Energy Shares by Consumer Category
(PLN Sales)

Customer Category	1974/75		1990/91	
	GWh	%	GWh	%
Residential	1,163	48	9,004	32
Industrial	738	30	14,166	51
Commercial	225	9	2,328	9
Public	318	13	2,224	8
Total	2,444	100	27,741	100

Source: PLN.

BEST AVAILABLE DOCUMENT

Exhibit 2-7
Historical Energy Sales of PLN by Consumer Category

Fiscal Year	Residential		Commercial		Industry		Public		Total	
	Energy (GWh)	Growth (%)	Energy (GWh)	Growth (%)	Energy (GWh)	Growth (%)	Energy (GWh)	Growth (%)	Energy (GWh)	Growth (%)
1974/75	1174		226		732		307		2439	
1975	1306	11.2	280	24.1	854	16.6	338	10.1	2777	13.9
1976	1420	8.7	318	13.5	928	8.7	366	8.4	3031	9.2
1977	1609	13.4	352	10.9	1142	23.1	413	12.8	3517	16.0
1978	1962	21.9	421	19.5	1443	26.4	452	9.5	4279	21.7
1979	2428	23.7	509	20.9	1910	32.3	487	7.7	5333	24.7
1980	2909	19.8	771	51.6	1874	-1.9	1007	106.6	6560	23.0
1981	3425	17.8	841	9.0	2469	31.8	1110	10.3	7845	19.6
1982	3933	14.8	941	11.9	3017	22.2	1210	9.0	9101	16.0
1983	4292	9.1	1003	6.6	3436	13.9	1270	4.9	10000	9.9
1984	4567	6.4	1054	5.1	4011	16.8	1408	10.9	11039	10.4
1985	5023	10.0	1151	9.3	4937	23.1	1596	13.4	12707	15.1
1986	5649	12.5	1297	12.7	6183	25.2	1657	3.8	14786	16.4
1987	6370	13.1	1491	14.9	7402	19.7	1795	8.3	17077	15.5
1988	7275	13.9	1700	14.1	9052	22.3	1966	9.6	19993	17.1
1989	7946	9.2	1982	16.6	11418	26.1	2088	6.2	23434	17.2
1990/91	9004	13.3	2328	17.5	14166	24.2	2224	6.5	27741	18.4
Average Growth (%)		13.6		15.6		20.1		13.6		16.3

Source: PLN.

BEST AVAILABLE DOCUMENT

Exhibit 2-8
Historical Data on Energy Sales, Java-Bali (MWh)

Year	Res.	G (%)	Comm.	G (%)	Public	G (%)	Industry						Total	G (%)
							Hotel	G (%)	Manuf.	G (%)	Total	G (%)		
1981/82	2606136		647324		855490		--	--	--	--	2234186		6343135	
1982/83	3003174	15.2	714259	10.3	934019	9.2	--	--	--	--	2732293	22.3	7383745	16.4
1983/84	3270762	8.9	768322	7.6	972647	4.1	--	--	--	--	3032550	11.0	8044282	8.9
1984/85	3488548	6.7	814504	6.0	1090735	12.1	--	--	--	--	3507825	15.7	8901612	10.7
1985/86	3818651	9.5	896493	10.1	1245689	14.2	--	--	--	--	4334796	20.7	10195629	14.5
1986/87	4258777	11.5	1009320	12.6	1270233	1.9	196417	--	4966200	--	5227876	23.5	11766206	15.4
1987/88	4817639	13.1	1177663	16.7	1378966	8.6	222550	13.3	5941106	19.6	6243811	19.4	13618079	15.7
1988/89	5494337	14.0	1356592	15.2	1511035	9.6	244324	9.8	7248413	22.0	7587777	21.5	15949741	17.1
1989/90	5998664	9.2	1595252	17.6	1582921	4.8	357891	46.5	9224883	27.3	9582774	26.3	18759611	17.6
1990/91	6795272	13.3	1872658	17.4	1693771	7.0	421122	17.7	11618992	26.0	12040113	25.6	22401815	19.4

G = Growth

Source: PLN.

BEST AVAILABLE DOCUMENT

140

Exhibit 2-9
Historical Data: Number of Customers, Java and Bali

Year	Residential	Growth (%)	Delta R	Commercial	Growth (%)	Delta C	Public	Growth (%)	Delta P
1986/87	4582992			182725			103734		
1987/88	5372457	17.2	789465	196672	8.7	15947	122895	18.5	19161
1988/89	6091848	13.4	719391	215485	8.5	16813	141420	15.1	18525
1989/90	6780980	11.3	689132	226571	5.1	11086	159163	12.5	17743
1990/91	7500342	10.6	719362	244481	7.9	17910	178556	12.2	19393

Year	Industry								Total	Growth (%)
	Hotel	Growth (%)	Delta H	Manufactur.	Growth (%)	Delta M	Total	Growth (%)		
1986/87	1634			14305			15948		4885399	
1987/88	1703	3.7	60	16103	12.6	1798	17806	11.7	5711830	16.9
1988/89	1778	4.4	75	18195	13.0	2092	19973	12.2	6468726	13.3
1989/90	2775	56.1	997	20844	14.9	2649	23619	18.3	7190333	11.2
1990/91	3138	13.1	363	24066	15.5	3222	27204	15.2	7950583	10.6

Source: PLN.

BEST AVAILABLE DOCUMENT

Captive Power Development

During the 1970s, industrial enterprises installed captive generation on a large scale because of inadequate supply and the poor reliability of grid supply. Captive plant capacity of about 6,922 MW accounts for approximately 43 percent of the nation's total installed capacity.

Exhibit 2-10 shows the captive generation capacity and mix in Indonesia. The predominant fuel for captive generation is diesel (82 percent in Java and 46 percent outside Java), with fuel oil's share being a mere 2 percent in Java and 3 percent outside Java. Other fuels used in significant amounts are gas in Java (14 percent) and hydro and wood outside Java (20 percent and 8 percent, respectively).

In the case of oil products, the overwhelming preference for diesel (No. 2) over residual fuel oil (No. 6 oil) can be surmised to have come about for two primary reasons: technical considerations as regards performance characteristics of available captive generation plant and the GOI's policies that historically distorted the relative prices of petroleum products by under-pricing diesel oil and over-pricing fuel oil. These price distortions have also contributed to the growth of captive power plant capacity because it was frequently cheaper for individual consumers to self-generate than to buy from PLN, whose predominant energy source was fuel oil.

Exhibit 2-10
Captive Generation: Estimated Installed Capacity and Mix

Location	Installed Capacity 1990/91 (MW)	Generation Capacity Mix (%), 1988/89							
		Diesel	Steam					GT	Total
			Hydro	Coal	Oil	Gas	Wood		
Java									
East	641			-					
Central	571			-					
West	1,154								
Jakarta	856								
Subtotal	3,224	82	--	--	2	14	1	1	100%
Outside Java	3,700	46	20	--	3	0	8	23	100%
Total	6,922	62%	11%	--	2%	7%	5%	13%	100%

Source: PLN and MME reports.

BEST AVAILABLE DOCUMENT

Subsequent to the domestic price adjustments in May 1990, distortions in product prices have been reduced, with automotive diesel oil (ADO) priced at Rp. 245/liter (a 4 percent premium over border prices as of June 1990), industrial diesel oil (IDO) priced at Rp. 235/liter (a 5 percent premium over June 1990 border prices), and marine fuel oil priced at Rp. 220/liter (an 83 percent premium over June 1990 border prices).

The 6,992 MVA (6,700 MW) of estimated generation capacity is spread over approximately 10,000 units split almost evenly between Java and outside Java. More than 90 percent of these installations are under 1 MVA each, and together they account for approximately 25 percent of installed captive generation capacity. On the other end of the spectrum, the 34 companies each with an installed capacity of 20 MVA or greater, together account for 3,300 MW (approximately 50 percent of national captive generation capacity). Within this segment, the generation mix is as follows: 30 percent diesel, 30 percent gas turbines, 23 percent hydro, 13 percent gas steam, and the remaining 4 percent almost evenly split between fuel oil-steam and wood-steam capacity.

Of the national total captive generation capacity of 6,922 MW, approximately 2,000 MW are estimated to be operated in a "standby plant mode," i.e., predominantly for reliability support.

The energy generation mix for 1989/1990 is estimated to be 50 percent from diesel generation, 32 percent from steam, and 15 percent from hydro, with the remainder from all other sources.

Finally, as discussed subsequently, captive power installed generation capacity is projected to increase substantially in the next few years as PLN is forced to scale back its planned program to supply new industrial load.

2.2 SYSTEM EXPANSION

Projected Power Demand

Exhibit 2-11 summarizes PLN's base case load forecast. Load is projected to grow at an annual rate of about 12 percent in Java and 13 percent outside Java. The forecasts in Exhibit 2-11 are best interpreted as supply forecasts and not demand forecasts. Because of resource constraints on PLN -- manpower and financial -- the electrification ratio of substantially below 100 percent will prevail throughout the end of the forecast horizon. In addition, PLN has reduced, if not completely deferred, for a four-year period, the takeover of captive power in industry. The latter capacity is projected to rise significantly in the decade because of PLN's inability to meet new demand, let alone the takeover of existing captive capacity.

BEST AVAILABLE DOCUMENT

Exhibit 2-11
Generation Load Forecast, Base Case

Year	Java-Bali		Other		Total	
	Peak Load (MW)	Energy Production (GWh)	Peak Load (MW)	Energy Production (GWh)	Peak Load (MW)	Energy Production (GWh)
1991/92	4,888	29,588	1,663	8,036	6,551	37,624
1992/93	5,684	34,406	1,881	9,162	7,565	43,568
1993/94	6,488	39,318	2,131	10,451	8,619	49,769
1994/95	7,578	45,973	2,410	11,916	9,998	57,889
1995/96	8,780	53,314	2,725	13,582	11,505	66,896
1996/97	10,129	61,555	3,082	15,474	13,211	77,029
1997/98	11,238	68,313	3,482	17,608	14,720	85,921
1998/99	12,273	74,607	3,928	19,997	16,210	94,584
1999/00	13,315	80,938	4,427	22,667	17,742	103,605
2000/01	14,443	87,793	4,976	25,619	19,419	113,412
2001/02	15,655	95,151	5,584	28,890	21,239	124,041
2002/03	16,965	103,108	6,256	32,516	23,221	135,624
2003/04	18,383	111,717	7,002	36,555	25,385	148,274
Growth Rate	11.7%	11.7%	12.7%	13.5%	11.9%	12.1%

Source: PLN (R6-Base), July 3, 1991

BEST AVAILABLE DOCUMENT

144

Power Development Program

Under PLN's expansion plan as of April 1991, there were approximately 5,800 MW of committed projects. The specific projects and the planned commissioning dates are indicated in Exhibit 2-12. The data reveal the following major PLN capacity additions by 1995/96: 9 x 120 MW of gas-fired combined-cycle plant capacity (Gresik), 2 x 400 MW of coal-steam capacity (Paiton-1 and -2), 4 x 55 MW of geothermal, and 4 x 125 MW of hydro. Beyond 1995/96, the committed plant consists of the 3 x 600 MW coal steam units at Suralaya.

PLN's least-cost generation expansion program beyond the committed plant shown in Exhibit 2-13 consists of the following major additions (12,000 MW) by the year 2003/04:

- 3,200 MW of coal-steam at Paiton (units 5 through 8)
- 4,200 MW of coal-steam in Central Java (7 x 600 MW)
- 1,800 MW of coal-steam in West Java (2 x 600 MW)
- 1,500 MW of coal-steam in East Java (3 x 500 MW)
- 960 MW of gas turbines (8 x 120 MW)
- 570 MW of hydro.

Some of these plants are to be offered to the private sector for development.

PLN's expansion plan reflects the objective of the diversification of its resource base away from oil and towards cost-effective indigenous energy resources -- natural gas, coal, geothermal, and hydro -- and where appropriate, to realize economies of scale by building large power stations and larger-sized generating units.

PLN's power development plan for outside Java calls for more than doubling the existing installed capacity of 2,500 MW by the year 1998/99. Of this increment, about half is projected to be hydro plant, 30 percent is projected to be combined cycle, and 20 percent wood-steam.

The Need for Demand-Side Management

The capital requirements for the national power development plan -- generation and network -- are estimated to be on the order of US $2+ billion per year, or US $25 billion through 2003/04, excluding price escalation and interest during construction. A substantial portion of this amount represents foreign exchange-related capital requirements.

BEST AVAILABLE DOCUMENT

Exhibit 2-12. Committed Projects and Commissioning Dates: Java-Bali System

Project Name		Capacity (MW)	Commissioning Date
1. GTPP ex Tosan Prima		3 x 20	December 1991
2. HEPP Tulung Agung		2 x 18	March 1993
3. CCPP Open Cycle Muara Karang	#1	1 x 100	September 1992
	#2	1 x 100	October 1992
	#3	1 x 100	November 1992
4. CCPP Steam Cycle Muara Karang		1 x 150	September 1994
5. CCPP Open Cycle Gresik	#1	1 x 120	March 1992
	#2	1 x 120	April 1992
	#3	1 x 120	May 1992
	#4	1 x 120	June 1992
	#5	1 x 120	July 1992
	#6	1 x 120	August 1992
	#7	1 x 120	September 1992
	#8	1 x 120	October 1992
	#9	1 x 120	November 1993
6. HEPP Tulis		2 x 6.5	1993/94
7. HEPP Ciliman		1 x 10	1993/94
8. HEPP Kedung Ombo		2 x 11.5	May 1993
9. Geothermal PP Salak		2 x 55	1993/94
10. CCPP Steam Cycle Gresik I		1 x 166	July 1993
11. CCPP Steam Cycle Gresik II		1 x 166	January 1994
12. CCPP Steam Cycle Gresik III		1 x 166	July 1994
13. STCPP Paiton 2		1 x 400	January 1994
14. STCPP Paiton #1		1 x 400	July 1994
15. Geothermal PP Drajat		1 x 55	1994/95
16. Geothermal PP Dieng		1 x 55	1994/95
17. HEPP Kesamben		1 x 33	1995/96
18. HEPP Cirata II		4 x 125	1995/96
19. STCPP Suralaya #5		1 x 600	March 1996
20. STCPP Suralaya #6		1 x 600	December 1996
21. STCPP Suralaya #7		1 x 600	September 1997

BEST AVAILABLE DOCUMENT

In reality, the total national capital expenditures for electricity generation and network capacity are an order of magnitude higher than the US $25+ billion figure just noted, because this figure does not reflect capital expenditures that must be made by industry to expand captive generation capacity.

Capital expenditures of such magnitude will impose a heavy burden (opportunity cost) on the economy, in that less capital investment will be available to the productive sector as well as for social development -- health, education, nutrition. Indeed, the news in recent months indicates that Indonesia has temporarily deferred some "mega" projects because of tight financial resources.

It is vital, therefore, that PLN leave no stone unturned to ensure that it pursues a least-cost expansion strategy for the power sector. A critical dimension of such a resource development strategy, and one that has gained significant ground in the U.S. during the last decade, is demand-side management (DSM). DSM involves actions taken by the utility, such as energy end-use efficiency improvement and load control -- direct load control as well as indirect load modulation via a tariff design -- that are cost-effective when compared with the cost of supply-enhancing measures that would be required, absent the change in customer consumption levels and/or patterns.

2.3 LOAD SHAPE CHARACTERISTICS AND OBJECTIVES

Exhibits 2-13 and 2-14 depict the recent evaluation of the system peak day and average workday load shape for the Java-Bali system. The load shape is characterized by an evening peak (from 6 p.m. to 10 p.m.), with a daytime "shoulder" and a mid-day dip. Average weekday and weekend load shapes are not very different (Exhibit 2-15). Furthermore, the general load shape has remained unchanged in recent years (Exhibit 2-16).

PLN has undertaken sporadic load research activities in recent years on a selective basis to support system expansion planning, tariff setting, and distribution planning.[3] These limited data reveal that the major contributors to the evening peak load are the residential lighting load, street lighting, and the commercial retail load. The industrial load exhibits the highest daily load factor and is fairly flat (Exhibits 2-17 and 2-18).

[3] Recently, under an ADB-financed technical assistance project, a load monitoring study is underway for the Java-Bali grid system. However, end-use load research is not a focus of that study.

BEST AVAILABLE DOCUMENT

Exhibit 2-13
Peak Day Load Curves

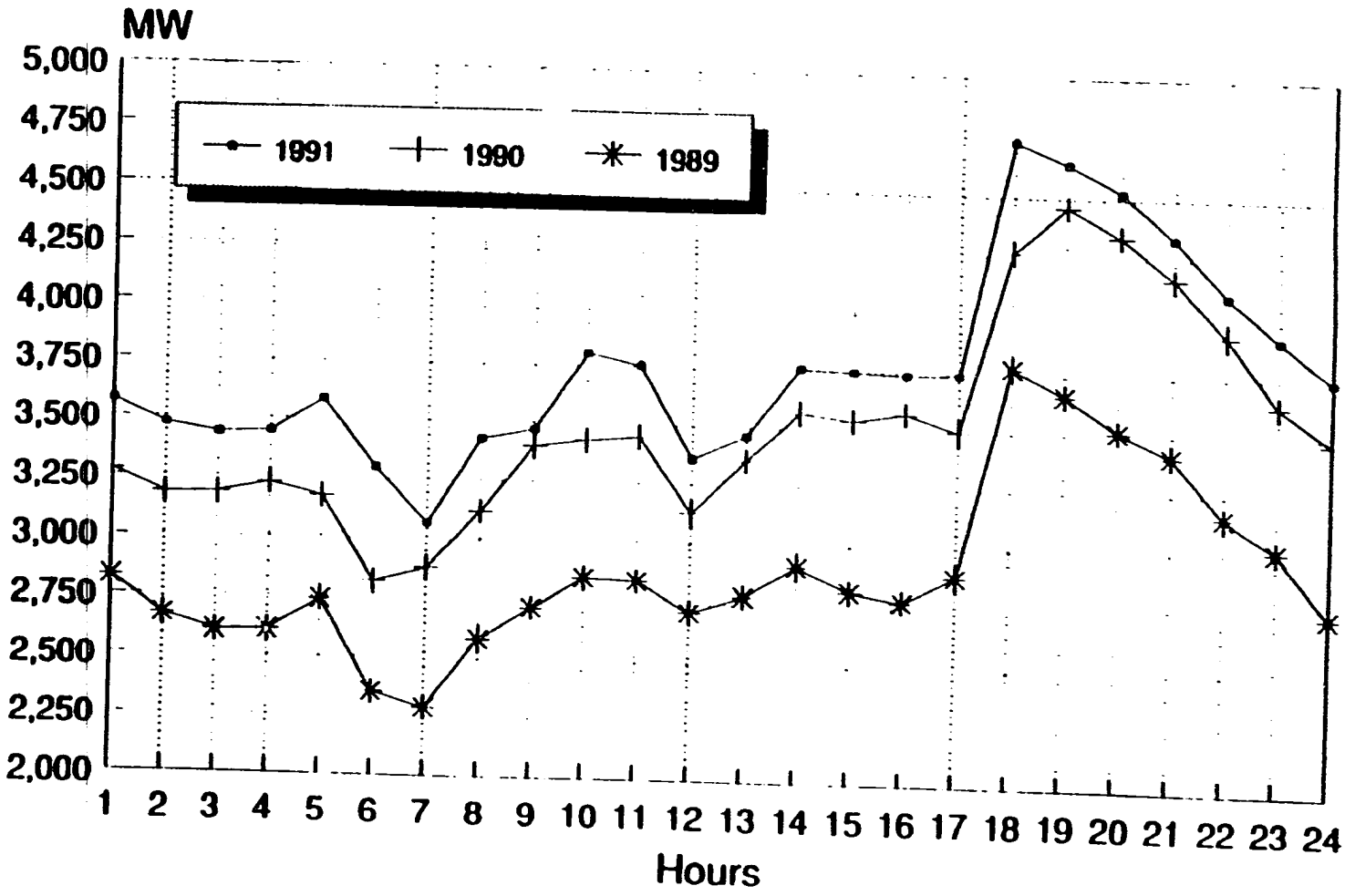

BEST AVAILABLE DOCUMENT

Source: RCG/Hagler, Bailly, based upon data provided by PLN.

Exhibit 2-14
Normalized Average Workday Load Curves

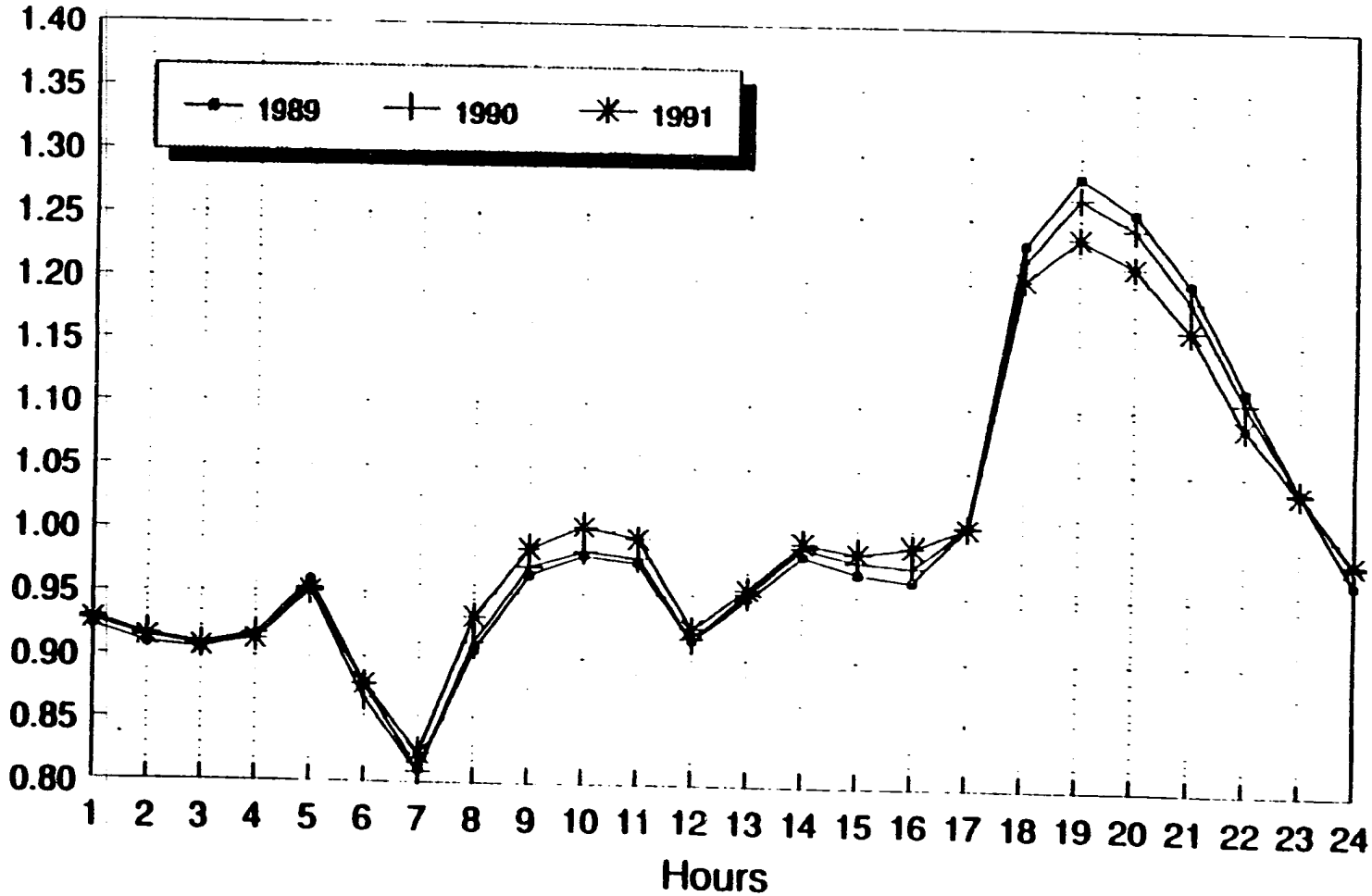

BEST AVAILABLE DOCUMENT

Source: RCG/Hagler, Bailly, based on data provided by PLN.

149

Exhibit 2-15
Characteristics of Daily Load in Java and Bali System, 1991/92

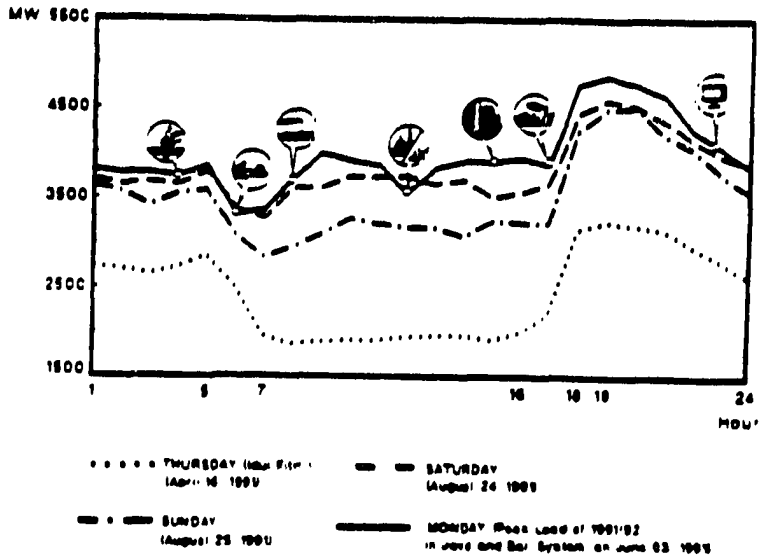

The predominance of the industrial load in the Jakarta area can be seen from Exhibit 2-19, which shows a relatively flat daily load curve between 10 a.m. and 6 p.m.

One of the fundamental building blocks of "production grade" DSM programs is detailed information about how, why, and when electricity is consumed and the efficiency of such consumption. This understanding requires collecting data on, updating, and monitoring trends as regards a very large number of variables such as saturation, appliance stock vintages and efficiencies, how decisions are made about new appliances when choices are available to consumers, what are the major determinants (i.e., end-uses) of electricity consumption profiles, and indeed, as a first step, what is the typical daily usage pattern at the premise level (e.g., house, building, factory, shop), etc.

Collecting such information requires designing and implementing a load monitoring and customer survey program. PLN has undertaken some residential surveys on appliance saturation and household usage.

BEST AVAILABLE DOCUMENT

Exhibit 2-16

Average Workday Load Curves

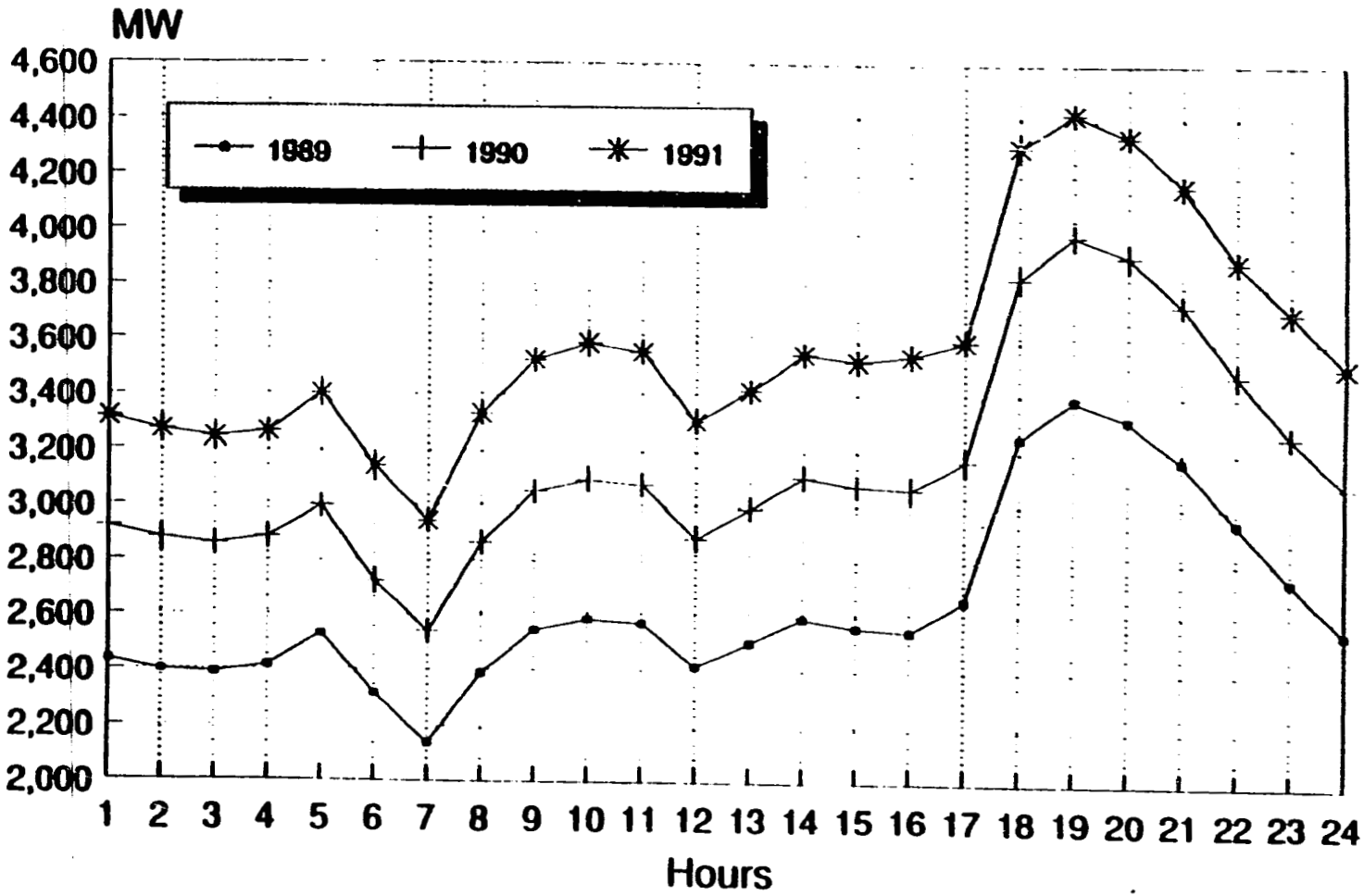

BEST AVAILABLE DOCUMENT

Source: RCG/Hagler, Bailly, based on data provided by PLN.

Exhibit 2-17
Sector Contribution to the Daily Load Curve, Java-Bali System, 1989/90

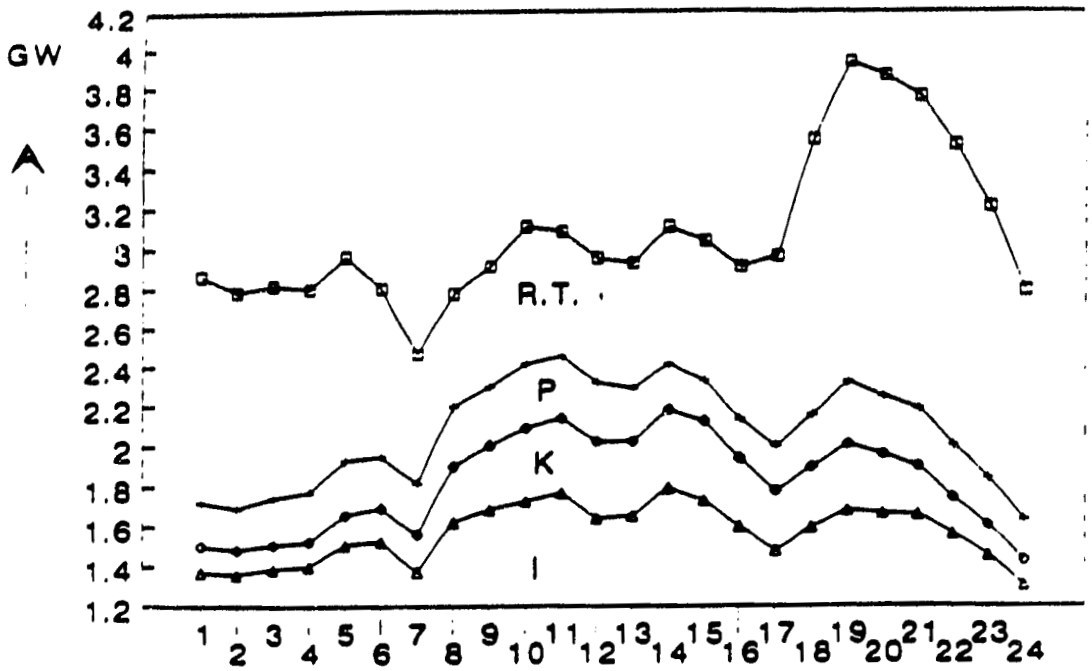

Source: PLN.

Exhibit 2-18
Load Curve Ratios by Subscribers: Java

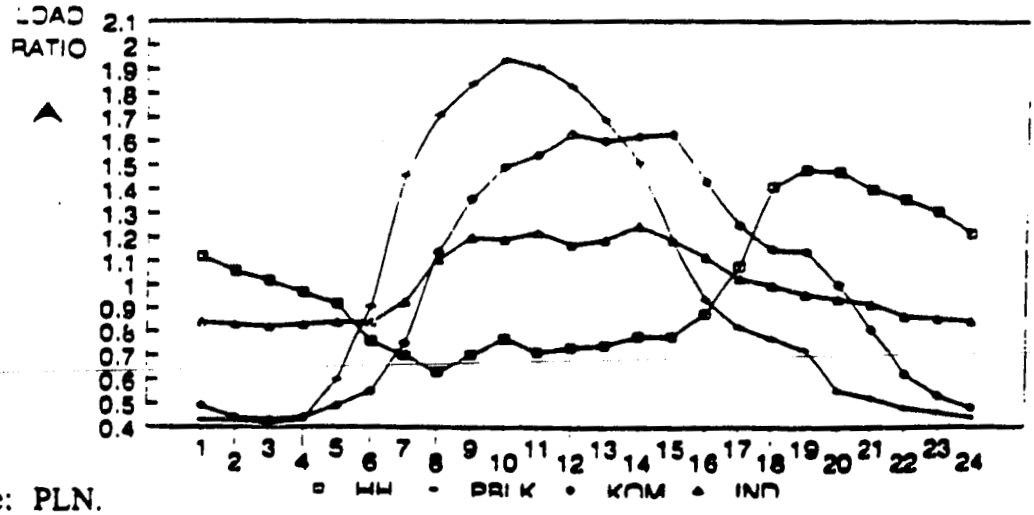

Source: PLN.

BEST AVAILABLE DOCUMENT

Exhibit 2-19
Daily Load Curve, March 1990, Java-Bali and Jakarta

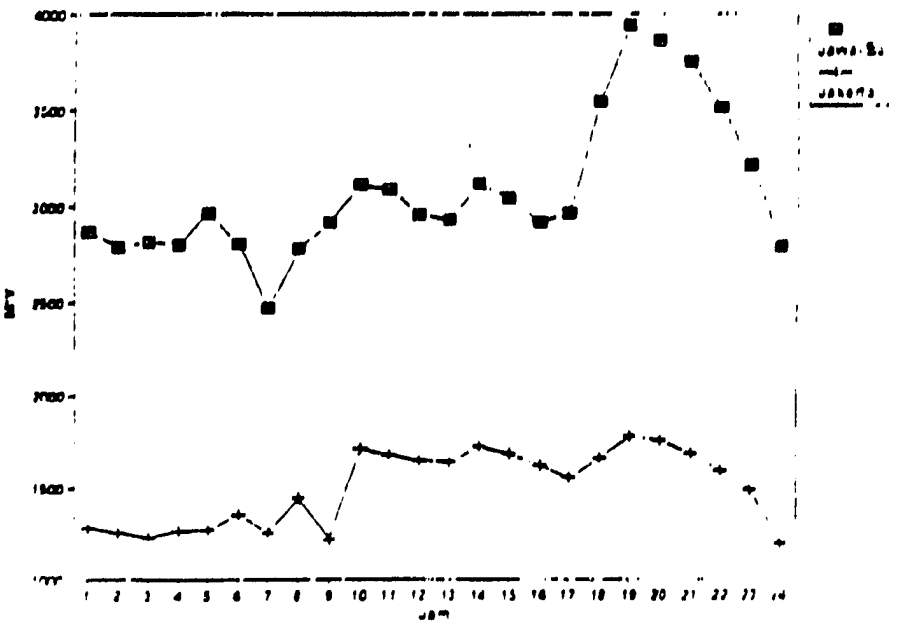

Load Shape Objectives

During the course of our mission to Jakarta, available data on load characteristics were reviewed with PLN operations and planning staff in light of the current and emerging power demand balance. A general consensus emerged that the most pressing problem facing PLN's Java-Bali grid operations projected for the mid-term and starting almost immediately is the potential inability to meet peak load. Given the lack of significant seasonality in load shape (e.g., see Exhibits 2-20 and 2-21), this situation translates into a DSM objective of peak shaving (clipping) for the four+ hours that define the evening system peak hours on weekdays.

Thus, a consensus was reached in discussions with PLN that this report will focus exclusively on a load management program directed at peak clipping during the evening hours. This, coupled with the fact that substantial amounts of installed captive power capacity exist (3,224 MW on Java alone, per Exhibit 2-10), established the basis for the analysis presented in this report: a DSM program centered around the concept of utilizing existing captive generation capacity for peak shaving. Such a program can potentially be structured as an interruptible service (IS) option directed to those customers with sufficient captive capacity to meet their

BEST AVAILABLE DOCUMENT

non-firm load when grid supply is curtailed. Under an alternate program structure -- power purchase/buyback -- power from captive generators would be injected into the grid.

BEST AVAILABLE DOCUMENT

Exhibit 2-20
Adjusted Monthly Peak Load

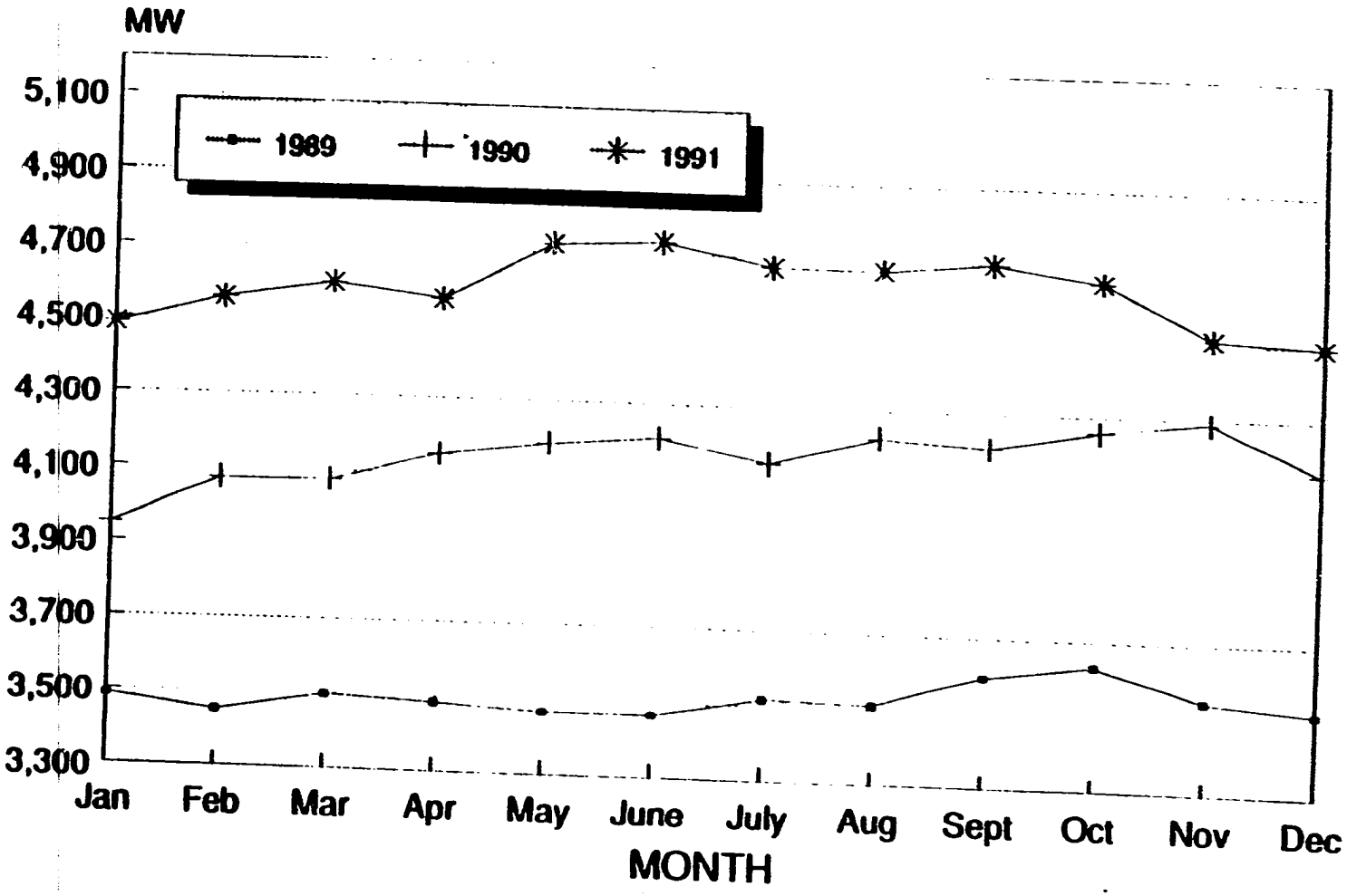

BEST AVAILABLE DOCUMENT

Source: RCG/Hagler, Bailly, based upon data provided by PLN.

Exhibit 2-21
Adjusted Monthly Energy Consumption

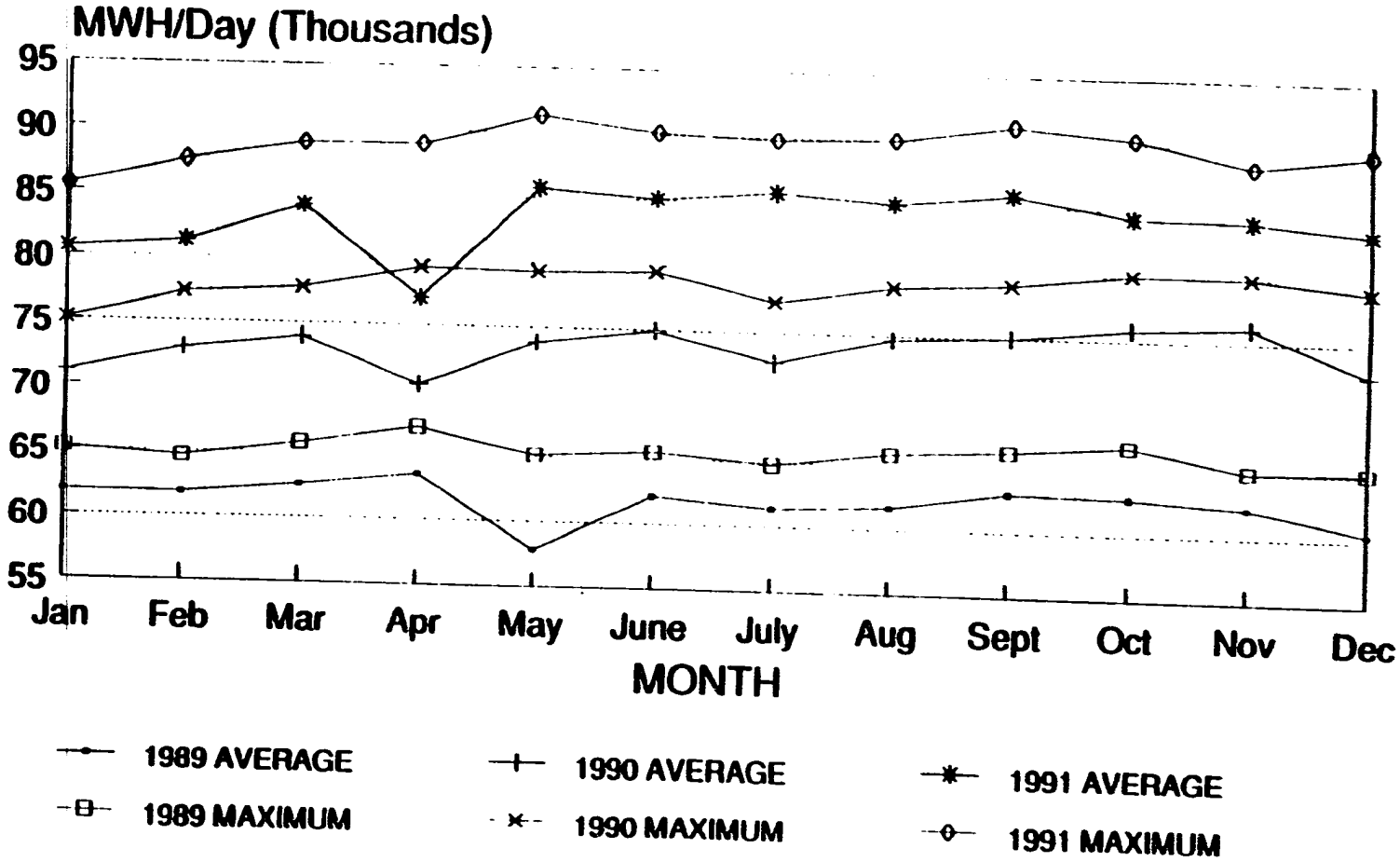

Source: RCG/Hagler, Bailly, based on data provided by PLN.

BEST AVAILABLE DOCUMENT

CHAPTER III: ECONOMIC COST OF GRID POWER SUPPLY

Rational electricity pricing -- level and structure -- must be a central element of any strategy for bringing about efficiency improvements whereby electricity consumption and production are matched to economically efficient levels. In this regard, economic theory suggests that the economic cost of power supply, as measured by its marginal cost, provides the appropriate benchmark for efficiency pricing.

This chapter begins by developing estimates of PLN's long-run marginal cost (LRMC) for the Java-Bali grid (Section 3.1). These estimates of LRMC provide the basis (Section 3.2) for defining tariff options to help achieve the desired load management objectives identified in Chapter 2.

3.1 LRMC FOR THE JAVA-BALI GRID SYSTEM

This section establishes estimates of the long-run marginal cost (LRMC) of supply for the Java-Bali grid system. Since a full-scale and independent LRMC analysis was outside the scope of this effort, the approach utilized was to update, adjust, and adapt as appropriate, estimates of LRMC developed in PLN's most recent LRMC study.[1]

Network Capacity Cost

For estimating LRMC for the network, PLN has used the Long-Run Average Incremental Cost (LRAIC) method, which we find to be acceptable. The estimates of network LRMC shown in Exhibit 3-1 were developed by updating estimates in PLN's November 1991 report, but updated for one year of inflation.[2]

---

[1] "PLN Electricity Pricing 1992/93, Based on LRMC Approach," Review November 1991, PLN Tariff Department Report.

[2] Based on discussions with PLN, a 4 percent escalation was used; estimated as 3 percent world inflation applied to the 70 percent foreign component of network investment, and 6 percent local inflation applied to the 30 percent local component of network investment.

BEST AVAILABLE DOCUMENT

Exhibit 3-1
Long-Run Marginal Network Capacity Costs
(1992 $/ckW/mo)[1]

Voltage		Voltage			Total
		HV	MV	LV	
High	(HV)	0.67	--	--	0.67
Medium	(MV)	0.72	4.27	--	4.98
Low	(LV)	0.85	5.07	8.57	14.49

[1]"ckW" denotes coincident kilowatt

Source: RCG/Hagler, Bailly, Inc. update of PLN estimates.

Generation Capacity Cost

To establish estimates of the LRMC for generating capacity, we have employed the "peaker method." This method is not only appropriate in the PLN context but is generally speaking superior to the differential revenue requirement method used by PLN until recently.[3]

Exhibit 3-2 lists the key input parameters developed in discussions with PLN. Estimates of LRMC for generation capacity are displayed in Exhibit 3-3, and range from $6.39 per coincident kW per month at HV to $8.81/ckW/mo at LV.[4]

[3] e.g., see "PLN Electricity Pricing 1989/90, Based Upon LRMC Approach," Review April 1990, PLN Tariff Department Report.

[4] Estimates of peak period losses, as a percentage of incoming, are 4.08 percent for HV, 8.43 percent for MV, and 20.75 percent for the LV network.

BEST AVAILABLE DOCUMENT

Exhibit 3-2
Long-Run Marginal Generation Capacity Cost:
Key Assumptions for Gas Turbine
(1992 $)

Capital Cost ($/kW)	390
Life (years)	20
Reserve Margin (%)	15
Discount Rate	0.12
Standard Conversion Factor	0.9
Station Use (%)	1.5
Fixed O&M Costs (%)	1.5
LRMC ($/ckW/mo)	6.13

Source: RCG/Hagler, Bailly, PLN.

Exhibit 3-3
LRMC for Generation Capacity
(1992 $)

Voltage	$/ckW/mo
Busbar	6.13
HV	6.39
MV	6.98
LV	8.81

Source: RCG/Hagler, Bailly, Inc.

BEST AVAILABLE DOCUMENT

Finally, Exhibit 3-4 shows the total marginal capacity costs (for network and generation), by delivery voltage.

Exhibit 3-4
Total Marginal Capacity Costs
(1992 $/ckW-mo)

Delivery Voltage	Generation Capacity	Network Capacity			Total
		HV	MV	LV	
HV	6.39	0.67	--	--	7.06
MV	6.98	0.72	4.27	--	11.97
LV	8.81	0.85	5.07	8.57	23.30

Source: Exhibit 3-1 and 3-3.

Marginal Energy Cost

Estimates of marginal energy costs were developed by reviewing and utilizing, as appropriate, information contained in PLN's November 1991 LRMC update report and using assumptions developed during the course of discussions with PLN Tariff Department and Control Center staff.

Exhibit 3-5 summarizes the calculation of marginal energy costs by the two plant types that are typically "on the margin" during most hours of the day. The specific assumption of relevance to the energy cost calculations are shown in the exhibit, as are the results of intermediate calculations. The marginal energy costs at the busbar are estimated to be 5.92 ¢/kWh for a gas turbine and 3.12 ¢/kWh for an oil-steam plant.

These estimates are based upon economic costs of fuel of $25.20/bbl of distillate (equivalently about Rp. 317/liter at an exchange rate of Rp. 2000-to-$US 1), and $15.30/bbl for fuel oil (equivalently about Rp. 192/liter), and were derived from a projected average crude oil price of $18.00/bbl for the three-year period 1993-1995. Furthermore, the price of distillate was pegged at 1.4 times the price of crude, whereas the fuel price was pegged at 0.85 times the crude oil price.

BEST AVAILABLE DOCUMENT

Exhibit 3-6 shows estimates of marginal energy costs by three day-types: working day, Saturday and other days. In each case, the energy costs in Exhibit 3-5 are weighted by the percentage of time the gas turbine and oil-steam plants are projected to be on the margin. The weights are based upon production simulation studies conducted by PLN's Control Center.

Exhibit 3-5
Marginal Energy Costs by Plant Type (cents/kWh)

	Marginal Plant	
	Gas Turbine	Oil Steam
Fuel	Distillate	Fuel Oil
Heat Content (kcal/kg)	11000	10000
Gross Heat Rate (kcal/kWh)	3340	2481
Variable O&M Costs (% of fuel costs)	3	6
Station Use (% of Gross Generation)	1.5	5
Fuel Costs (cents/kWh)	5.66	2.81
Variable O&M (cents/kWh)	0.17	0.17
Station Use Losses (cents/kWh)	0.08	0.14
Total cost at Busbar (cents/kWh)	5.92	3.12

Source: RCG/Hagler, Bailly, Inc., based upon discussions with PLN.

Finally, Exhibit 3-7 presents estimates of marginal energy costs by delivery voltage for peak and off-peak hours. During peak hours, marginal energy costs range from 7.78¢/kWh at LV to 5.65¢/kWh at HV. Corresponding estimates during off-peak hours are 4.37¢/kWh and 3.41¢/kWh, respectively, for LV and HV delivery.

Incremental Energy Costs at Financial Prices

The marginal energy costs in Exhibit 3-7 are stated in economic terms and as market efficiency prices. It is a matter of interest to compare these costs to incremental energy costs

BEST AVAILABLE DOCUMENT

Exhibit 3-6
Marginal Energy Costs (MEC) By Day Type
(1992 ¢/kWh)

Day Type	Weight	Peak			Off-Peak		
		Gas Turbine %	Oil-Steam %	MEC ¢/kWh	Gas Turbine %	Oil-Steam %	MEC ¢/kWh
Working	0.69	0.91	0.09	5.66	0.09	0.91	3.37
Saturday	0.14	0.78	0.22	5.30	0.09	0.91	3.37
Sundays/ Holidays	0.17	0.50	0.50	4.52	0.00	1.00	3.12

Source: Based upon production simulation study undertaken by PLN.

Exhibit 3-7
Marginal Energy Costs By Delivery Voltage
(¢/kWh)

Delivery Voltage	Peak	Off-Peak
Busbar	5.42	3.33
HV	5.65	3.44
MV	6.17	3.68
LV	7.78	4.40

Source: RCG/Hagler, Bailly, Inc. based upon Exhibits 3-5 and 3-6.

BEST AVAILABLE DOCUMENT

based on the financial cost of fuel to PLN at present, i.e., at Rp. 300/liter for distillate, and Rp. 220/liter for fuel oil.[5]

Exhibit 3-8 shows the compounding estimates of incremental fuel and variable O&M costs, and utilizing an exchange rate that reflects the prevailing regime in recent months (Rp. 2,000-to-US$ 1).

Exhibit 3-8
Incremental Energy Costs at
Financial Prices for Fuel (¢/kWh)

Delivery Voltage	Peak	Off-Peak
Busbar	5.24	3.72
HV	5.46	3.84
MV	5.96	4.11
LV	7.52	4.92

The numbers in Exhibit 3-8 are not significantly divergent from those in Exhibit 3-7. Therefore, in the remainder of this report, we focus on the economic costs stated in Exhibit 3-7.[6]

3.2 SUMMARY OF MARGINAL COSTS

Exhibit 3-9 summarizes marginal costs by tariff category. Attention is restricted to the tariff categories most likely applicable to the majority of customers with captive power generation. These are the following tariff categories:

- Extra-Large Industrial Service (I-5)
- Large Industrial Service (I-4)
- Large Commercial Service (U-3)
- Large Hotel Service (H-3)
- Large Government Office Service (G-2)

[5] i.e., $23.85/bbl of distillate and $17.49/bbl of fuel oil at an exchange rate of Rp. 2,000 to U.S. $1.

[6] In situations where a large difference exists between the economic and financial costs of incremental energy, a "full avoided cost" purchase tariff could have an adverse financial implication for PLN.

BEST AVAILABLE DOCUMENT

- Medium Industrial Service (I-3).

Estimates of monthly load factors and daily peak energy charges are based upon load research data provided by PLN. Exhibit 3-10 presents a corresponding summary of marginal costs in Rp., utilizing a forward exchange rate of 2060-to-1.[7]

By way of illustration, Exhibit 3-9 (Exhibit 3-10) indicates that for a typical large industrial service customer (receiving service at HV with maximum coincident demand of 1 kW), the economic cost of supply is 5.15¢/kWh (Rp. 106.11), of which 3.77¢/kWh (Rp. 77.64/kWh) is the energy cost, with the balance, 1.38¢/kWh (Rp. 28.47/kWh) representing the cost of capacity. By comparison, under the present tariff structure (I-4), such a customer pays Rp. 110.00/kWh (Exhibit 3-11). Of this amount, Rp. 16.70/kWh represents capacity-related charges. Whereas this economic cost of supply -- level and structure -- for tariff I-4 customers is fairly close to the tariff, substantial differences exist between the economic cost of supply -- levels and structure -- and the present tariffs in the case of all the other tariff categories shown in Exhibits 3-9, 3-10, and 3-11.

[7] This forward rate is based upon the 1991 average exchange rate of Rp. 1968-to-US $1 escalated by 5 percent, the trend experienced in recent years. Spot rates of 2030-to-1 have been recorded in the currency futures markets during May 1992.

BEST AVAILABLE DOCUMENT

Exhibit 3-9
Summary of Marginal Costs (1992 $)
(For Customers with Maximum Coincident Demand of 1 kW)

Tariff Category	Voltage	Monthly Load Factor	Peak Energy Share	Capacity $/ckW-mo	Energy (¢/kWh)			Total ¢/kWh
					Peak	Off-Peak	Average	
I-5	HV	0.70	0.15	7.06	5.65	3.44	3.77	5.15
I-4/U-3/ H-3/G-2	MV	0.65	0.12	11.96	6.17	3.68	3.98	6.50
I-3	LV	0.55	0.16	23.30	7.78	4.40	4.95	10.75

Exhibit 3-10*
Summary of Marginal Costs (1992 Rp.)
(For Customers with Maximum Coincident Demand of 1 kW)

Tariff Category	Voltage	Monthly Load Factor	Peak Energy Share	Capacity Rp./ckW-mo	Energy (Rp./kWh)			Total Rp./kWh
					Peak	Off-Peak	Average	
I-5	HV	0.70	0.15	14,546	116.36	70.81	77.64	106.11
I-4/U-3/ H-3/G-2	MV	0.65	0.12	24,642	127.08	75.86	82.01	133.94
I-3	LV	0.55	0.16	47,993	160.34	90.73	101.87	221.41

* Exchange rate = 2060 to 1

BEST AVAILABLE DOCUMENT

Exhibit 3-11
Power Purchase Costs by Tariff Category
(Customers with Maximum Coincident Demand = 1 kW)

Tariff Category	Voltage	Monthly Load Factor	Peak Energy Share	Contract Demand Charge Rp./nc kVA-mo	Energy Tariff (Rp./kWh)			Capacity Cost Rp./kWh	Total Power Purchase Cost Rp./kWh
					Peak	Off-Peak	Average		
I-5	HV	0.70	0.15	3,960	188.50	76.50	93.30	16.70	110.00
I-4	MV	0.65	0.12	4,200	212.00	84.00	99.36	26.46	125.82
U-3	MV	0.65	0.12	4,500	337.50	135.00	159.30	28.35	187.65
H-3	MV	0.65	0.12	4,420	274.00	109.50	129.24	27.85	157.09
G-2	MV	0.65	0.12	3,700	236.00	94.50	111.48	23.31	134.79
I-3	LV	0.55	0.16	4,500	220.00	85.50	107.02	27.98	135.00

BEST AVAILABLE DOCUMENT

CHAPTER IV: PROGRAM OPTIONS, POTENTIAL, AND INCENTIVE STRUCTURE

This chapter develops the DSM program options for peak load management utilizing captive power generation. Section 4.1 begins with an assessment of the peak load management potential. This is followed in Section 4.2 with an analysis of the private cost of self-generation from the perspective of industrial customers who own and operate such plant. This cost, together with estimates of PLN's "avoided cost," bracket the range within which a power purchase tariff would be set. Section 4.3 discusses the incentive tariff structure for the DSM options.

4.1 DSM PROGRAM OPTIONS

Based upon a careful review of available information, the feasibility of two peak load management programs in the near- to mid-term was assessed:

- a DSM program to "purchase" daily, excess capacity from captive power generators during the peak hours: 18:00 p.m. to 22:00 p.m.
- a direct load control (DLC) program that uses an FM radio system to control central air conditioners, electric water heaters, and miscellaneous industrial equipment during PLN's system peak hours.

After some consideration, the DLC program to control central air conditioners, electric water heaters, and miscellaneous industrial equipment was not deemed to be appropriate at this stage because this type of load control system cannot produce a large enough peak load reduction within the next few years to make any significant impact on PLN's system. However, this type of load management program should be considered in the future to moderate peak load growth in the industrial sector.

The proposed DSM program comprises three options:

- **Interruptible:** Under this option, PLN would interrupt service during peak hours to customers who sign up for the program. Such customers could meet their load from excess self-generation capacity, if they so chose.
- **Buy Back from PLN's Customers:** Under this option, PLN would purchase excess capacity from captive power generators during the peak hours.
- **Buy Back from Non-PLN Customers:** Under this option, peaking capacity would be purchased from captive power generators owned by electricity consumers who are currently not PLN customers.

BEST AVAILABLE DOCUMENT

The interruptible service option does not require any additional interconnection costs, other than some metering-related costs, and would be the cheapest to implement. By contrast, Options 2 and 3 will require interconnection protection, and additional metering costs, as well as costs to synchronize the captive power generation with the grid. In addition, in the case of non-PLN customers (Option 3), the transmission system may need to be extended to interconnect these customers.

Program Potential

In order to develop estimates of program potential, this study utilized information from PLN's captive power database for industries with installed captive diesel generation capacity of at least 5 MVA.[1]

There are 103 companies with a total installed capacity of 1,481 MVA (Exhibit 4-1) in the database. Of these, there are 71 companies that are also customers of PLN (Exhibit 4-2). The remaining 32 companies with a total capacity of at least 5 MVA are not PLN's customers.

Exhibit 4-1
Installed Capacity of Diesel Captive Power in Indonesia:
Companies with Total Installed Capacity of at Least 5 MVA

Region	Number of Companies	Number of Units	Installed Capacity		Contract Demand with PLN	
			(MVA)	(MW)	(MVA)	(MW)
East Java	26	34	350	280	231	185
Central Java	22	22	289	232	43	34
West Java	22	22	475	380	111	89
Jaya & Tangerang	33	33	367	294	145	116
Total	103	111	1481	1186	530	424

[1] Since the focus of this analysis is on peak load management, only diesel generators were considered because of their quick start-up ability. Steam generators were not considered because their start-up time is substantially longer than diesel generators.

BEST AVAILABLE DOCUMENT

Exhibit 4-2
Excess On-Peak Captive Generation Capacity Potential

Region		Number of Companies	Installed Captive Generation Capacity		Contract Demand with PLN		Estimated Demand at PLN System Peak		Excess Capacity at PLN Peak	
			(MVA)	(MW)	(MVA)	(MW)	(MVA)	(MW)	(MVA)	(MW)
PLN CUSTOMER	East Java	23	321	257	231	185	75	60	246	197
	Central Java	11	95	76	43	34	14	11	81	65
	West Java	16	161	129	111	89	36	29	125	100
	Jaya & Tangerang	21	227	182	145	116	47	38	180	144
	Subtotal	71	804	643	530	424	173	138	631	505
NON-PLN CUSTOMER	East Java	3	29	23	--	--	7	5	22	18
	Central Java	11	194	155	--	--	29	23	165	132
	West Java	6	314	251	--	--	71	56	243	195
	Jaya & Tangerang	12	140	112	--	--	29	24	111	89
	Subtotal	32	677	542	0	0	135	108	542	434
	Total	103	1481	1185	530	424	308	246	1173	939

Notes: 1. MW are calculated using a power factor of 0.80.
2. The demand at the time of PLN's system peak for PLN customers is calculated based on the responsibility factor of 0.4640 for the HV class, 0.3445 for the MV class, and 0.4050 for the LV class.

BEST AVAILABLE DOCUMENT

As a group, PLN customers with captive generation have a contract demand of 530 MVA. The coincident demand is estimated to be 173 MVA.[2] The latter represents about 19 percent of the total captive generation installed capacity. Thus, there is a potential for PLN to "purchase" up to 505 MW of excess captive generation capacity during the peak hours (Exhibit 4-2).

The total installed capacity of non-PLN customers is 677 MVA (542 MW). Assuming that this group of customers has the same peak responsibility factor as the first group, it is estimated that their coincident demand is 108 MW. This indicates a potential of up to 434 MW of excess capacity that could be tapped during peak hours.

Exhibit 4-3 summarizes the peak load management potential by each of the three DSM options. A total (technical) potential of 792 MW is estimated in Java, 123 MW can be tapped through an interruptible service program. In addition, 318 MW of on-peak capacity can potentially be purchased from existing PLN customers, and the potential exists for purchasing another 336 MW of peaking capacity from non-PLN customers.

To illustrate, consider the estimate of interruptible load in Exhibit 4-3. This was derived as follows. For PLN customers whose load is lower than their captive installed capacity, as per the data base, the connected load is viewed as interruptible since in the event all supply is interrupted, the customer can self-generate to meet load. In addition, the surplus captive capacity (installed less load) can be purchased by PLN under the buyback option. It is relevant to note that the estimate of interruptible load in Exhibit 4-3 understates the true potential in that it does not include actual load interruption potential by the customer rescheduling plant operations.

It should be emphasized that the estimates of technical potential developed from data in Exhibit 4-2 are best interpreted as approximate and order-of-magnitude numbers. Whereas PLN's regional offices periodically update these data, there are lags in reporting. Moreover, in many instances, the data are not independently verified or validated. In this connection, a recently completed survey [11] estimated the potential for power purchases (MW) from captive power generation in Java-Bali, with installed capacities of 5 MVA or greater. The study found that the difference between the installed captive generation capacity and the maximum generation is on the order of 50 percent of installed captive capacity. This represents an estimate of the non-coincident potential for power purchases from PLN. Clearly, the potential for power purchases will be higher than 50 percent at other times (see the figure on the next page).

BEST AVAILABLE DOCUMENT

[2] This estimate is derived using "peak responsibility factor" estimates provided by PLN. These are 0.4640 of HV, 0.3345 for MV, and 0.4050 for LV.

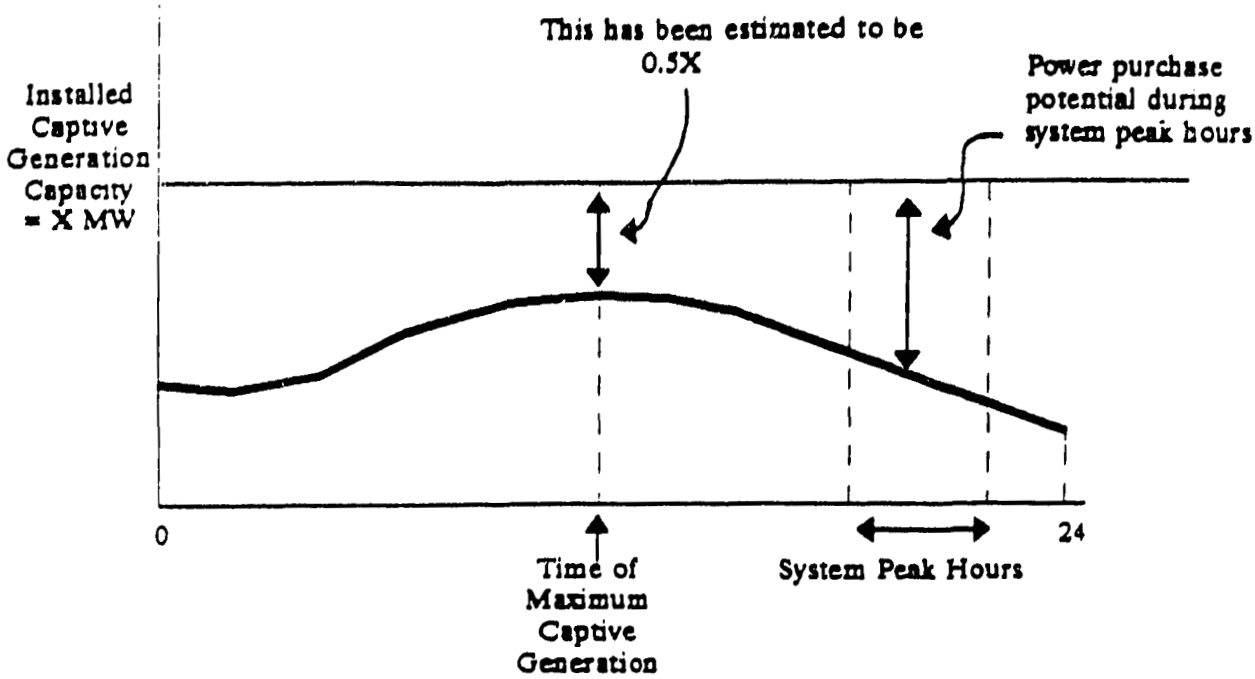

If we conservatively assume this percentage to be 60 percent of installed captive capacity, and apply this to the installed capacity estimate of 1,481 MW in Exhibit 4-2, a technical potential for about 900 MW is obtained as compared with 1,156 MW in Exhibit 4-3.

4.2 CAPTIVE POWER GENERATION COST

Data on relevant technical performance characteristics and costs of captive power generation were first assembled (Exhibit 4-4). The primary Indonesian sources were PLN's current planning studies for future diesel plants it is planning to build, PLN's operating statistics on its existing diesel stations, and vendors in Jakarta that sell diesel generator sets.[3]

In addition, these country-specific data were supplemented with comparable data from studies/reports sponsored by the World Bank (IBRD), USAID, and the Inter-American Development Bank (IDB). These data, including other key assumptions in the analysis, are displayed in Exhibit 4-4.

Exhibits 4-5 and 4-6 summarize, respectively, the fixed cost, variable cost, and total unit cost, in $ and Rp., for different plant sizes and types, and as a function of existing utilization of plant (i.e., capacity factor). The primary focus in Exhibits 4-2 and 4-3 is on unit sizes in the 1 to 10 MW range. This reflects the view that the initial DSM program design would target the

[3] Komatsu and Caterpillar.

BEST AVAILABLE DOCUMENT

Exhibit 4-3
Peak Load Management Potential

Option	Region	MW	On-Peak Generation (MWh/Year)
1. Interruptible	East Java	50	87,600
	Central Java	11	16,060
	West Java	29	42,340
	Java & Tangerang	38	55,480
	Subtotal	138	201,480
2. Buy Back Option # 1: PLN's Customers > 10 MVA	East Java	128	186,880
	Central Java	38	55,480
	West Java	60	87,600
	Jaya 7 Tangerang	92	134,320
	Subtotal	318	464,280
3. Buy Back Option #1: Non-PLN Customers > 10 MVA	East Java	0	0
	Central Java	81	118,260
	West Java	189	275,940
	Jaya & Tangerang	66	96,360
	Subtotal	336	490,560
	Total	792	1,156,320

larger customers (i.e., those with total captive capacity of 5 MVA or greater). Whereas within the total population of customers with one or more captive generation sets, most have generation sets in the fractional MW size range, the total installed capacity of the larger customers is typically composed of individual units that are larger than 1 MW.[4] By way of illustration, for a captive power plant of type 5 -- a medium-speed

[4] As noted in Chapter 2, Section 1, over 90 percent of the installations, nationally, are under 1 MVA each, and together, they account for approximately 25 percent of installed captive generation capacity. On the other hand, 34 companies each with installed capacities of 25 MVA or greater together account for 3,300 MW, or approximately 50 percent of national captive generation capacity. Furthermore, a review of permit applications filed at the Directorate General for Electricity and New Energy (DGENE) reveals that the larger installations tend to employ unit sizes in excess of 1 MVA.

BEST AVAILABLE DOCUMENT

Exhibit 4-4
Typical Captive Power Plant Characteristics

Input Parameter	Unit	Captive Plant							
		1	2	3	4	5	6	7	8
Unit Size	MW	1.0	4.7	1.6	2.5	Typical Sizes	3.0	5.2	12.6
Fuel		Diesel	Diesel	Diesel	Diesel	Diesel	Diesel	Diesel	Diesel
Type		HSD	HSD	MSD	MSD	MSD	MSD	MSD	SSP
Speed	RPM	1500	1000					600	426
Data Source		Komtasu Vnd	CAT Vnd	IDB	PLN	IBRD	IDB	PLN	PLN
Capital Costs	$/kW	200	398	925	1428	1000	969	1114	1043
Equipment		187	362						
Installation		13	36						
Financing									
Life	Yrs.	10	10	20	20	20	20	20	20
Annual Fixed O&M	% of Capital	5	6	6	5	5	6	5	5
Variable O&M	% of Fuel/kWh	6	6	6	3	5	6	3	3
Heat Content	kcal/kg	11000	11000	11000	11000	11000	11000	11000	11000
Heat Rate	kcal/kWh			2688	2688	2688			
	g/kWh	180	215	255	244	250	215	213	188
Specific Gravity	g/Liter	850	850	850	850	850	850	850	850
Station Use	% of Gross Gen.	0	0	0	0	0	0	0	0
Fuel Price	$/Barrel								
	Rp./Liter	315	315	315	315	315	315	315	265
	$/Ton								
Exchange Rate	Rp./$	2060	2060	2060	2060	2060	2060	2060	2060
Interest Rate	%	12	12	12	12	12	12	12	12
CRF		0.1770	0.1770	0.1339	0.1339	0.1339	0.1339	0.1339	0.1339

BEST AVAILABLE DOCUMENT

Cost Component	Unit	Captive Plant							
		1	2	3	4	5	6	7	8
Annual Capacity Costs	$/kW-Yr	37.17	74.67	131.27	200.74	140.57	123.32	156.60	146.62
Deprec & Financing		35.40	70.44	123.84	191.18	133.88	116.34	149.14	139.64
Fixed O&M		1.77	4.23	7.43	9.56	6.69	6.98	7.46	6.98
Capacity Costs	c/kWh								
0.15		2.83	5.68	9.99	15.28	10.70	9.39	11.92	11.16
0.17		2.55	5.11	8.99	13.75	9.63	8.44	10.72	10.04
0.20		2.12	4.26	7.49	11.46	8.02	7.04	8.94	8.37
0.30		1.41	2.84	4.99	7.64	5.35	4.69	5.96	5.58
0.35		1.21	2.44	4.28	6.55	4.58	4.02	5.11	4.78
0.40		1.06	2.13	3.75	5.73	4.01	3.52	4.47	4.18
0.50		0.85	1.70	3.00	4.58	3.21	2.82	3.58	3.35
0.60		0.71	1.42	2.50	3.82	2.67	2.35	2.98	2.79
0.70		0.61	1.22	2.14	3.27	2.29	2.01	2.55	2.39
0.80		0.53	1.07	1.87	2.86	2.01	1.76	2.23	2.09
0.85		0.50	1.00	1.76	2.70	1.89	1.66	2.10	1.97
0.90		0.47	0.95	1.66	2.55	1.78	1.56	1.99	1.86
Variable Costs	c/kWh	3.50	4.10	4.86	4.52	4.72	4.10	3.95	2.93
Fuel		3.24	3.87	4.59	4.39	4.50	3.87	3.83	2.85
O&M		0.26	0.23	0.28	0.13	0.22	0.23	0.11	0.09
Total Costs	c/kWh								
CF = .15		6.33	9.76	14.85	19.80	15.42	13.49	15.86	14.09
CF = .17		6.04	9.21	13.85	18.27	14.35	12.54	14.76	12.97
CF = .20		5.62	8.36	12.36	15.98	12.75	11.14	12.89	11.30
CF = .30		4.91	6.94	9.86	12.16	10.07	8.79	9.91	8.61
CF = .35		4.71	6.54	9.14	11.07	9.31	8.12	9.05	7.71
CF = .40		4.56	6.23	8.61	10.25	8.73	7.62	8.42	7.11
CF = .50		4.35	5.80	7.86	9.10	7.93	6.92	7.52	6.28
CF = .60		4.20	5.52	7.36	8.34	7.40	6.45	6.93	5.72
CF = .70		4.10	5.32	7.00	7.79	7.01	6.11	6.50	5.32
CF = .80		4.03	5.17	6.74	7.39	6.73	5.86	6.18	5.02
CF = .85		4.00	5.10	6.63	7.22	6.61	5.76	6.05	4.90
CF = .90		3.97	5.05	6.53	7.07	6.51	5.66	5.93	4.79

* Unit characteristics are defined in Exhibit 4-4.

BEST AVAILABLE DOCUMENT

Exhibit 4-6: Captive Power Generation Costs (Rp.)*

Cost Component	Unit	Captive Plant							
		1	2	3	4	5	6	7	8
Annual Capacity Costs	Rp./kW-Yr	76563	153812	270412	413520	289580	254041	322592	302032
Deprec & Financing		72917	145106	255106	393829	275790	239662	307230	287649
Fixed O&M		3646	8706	15306	19691	13790	14380	15362	14382
Capacity Costs	Rp./kWh								
0.15		58	117	206	315	220	193	246	230
0.17		52	105	185	283	198	174	221	207
0.20		44	88	154	236	165	145	184	172
0.30		29	59	103	157	110	97	123	115
0.35		25	50	88	135	94	83	105	99
0.40		22	44	77	118	83	73	92	86
0.50		17	35	62	94	66	58	74	69
0.60		15	29	51	79	55	48	61	57
0.70		12	25	44	67	47	41	53	49
0.80		11	22	39	59	41	36	46	46
0.85		10	21	36	56	39	34	43	41
0.90		10	20	34	52	37	32	41	38
Variable Costs	Rp./kWh	72	84	100	93	97	84	81	60
Fuel		67	80	95	90	93	80	79	59
O&M		5	5	6	3	5	5	2	2
Total Costs	Rp./kWh								
CF = .15		130	202	306	406	318	278	327	290
CF = .17		124	190	285	376	296	258	302	267
CF = .20		116	172	255	329	263	229	265	233
CF = .30		101	143	203	250	207	181	204	175
CF = .35		97	135	188	228	192	167	187	159
CF = .40		94	128	177	211	180	157	173	147
CF = .50		90	120	162	188	163	142	155	129
CF = .60		87	114	152	172	152	133	143	118
CF = .70		85	110	144	161	145	126	134	110
CF = .80		83	106	139	152	139	121	127	106
CF = .85		82	105	136	149	136	119	125	101
CF = .90		82	104	134	146	134	117	122	99

* Unit characteristics are defined in Exhibit 4-4.

BEST AVAILABLE DOCUMENT

of unit size 1.6 MW (Exhibit 4-1) -- the annual capital cost is $131.27/kW-year. At an annual capacity factor of 40 percent, this translates to an effective cost of 3.75¢/kWh (Rp. 77/kWh). Variable costs of operation are estimated to be 4.86¢/kWh (Rp. 100/kWh).

Exhibit 4-3 shows that whereas the unit variable operating cost is typically in the 85 to 100 Rp./kWh range (with a central tendency around Rp. 90/kWh), the data show significantly more variability in the capacity costs.

Exhibit 4-7 presents a graphic representation of the cost of captive generation -- variable, fixed, and total -- as a function of plant utilization. It is based upon a "typical" captive plant configuration that is indicative of the data in Exhibit 4-6 (i.e., variable cost of Rp. 90/kWh and capital costs of $925/kW). This indicative cost structure is also used subsequently as a basis for formulating incentive tariffs for furthering the DSM goal of peak load management by procuring power from customers who have captive generator sets.

In particular, the annual capital costs of the two high-speed diesel units quoted by the two vendors (plants 1 and 2 in Exhibits 4-2 and 4-3) are substantially lower than the corresponding estimates for the medium-speed diesel units (plants 3 through 7), with the total costs for the latter being higher for all levels of plant utilization. We have not been able to reconcile these differences to our satisfaction.[5]

4.3 INCENTIVE TARIFFS

A key aspect of the DSM program design is the incentive structure. Developing the appropriate tariff for the program discussed in the preceding section is a complex exercise. In this regard, it is important to enunciate the key principles that have guided the development of the incentive tariff structure developed in this section.

- **Economic efficiency,** which essentially requires that the power purchase price not exceed the economic cost of the least-cost alternative supply option available to PLN (i.e., PLN's "avoided cost").

- **Financial requirements** of the seller as well as financial implications for the purchaser (PLN) need to be considered.

- **Equity considerations,** which are concerned with how any financial surpluses are appropriated.

[5] It is interesting to note that a recent and major study on diesel power plant cost and efficiency comparisons across 65 countries, undertaken by the IBRD with funding from USAID's Office of Energy and Infrastructure, also experienced similar problems and noted that "much work on capital costs needs to be done." [10]

BEST AVAILABLE COPY

Exhibit 4-7
Unit Generation Costs
For a Typical 1.6 MVA Medium Speed Diesel Unit

BEST AVAILABLE COPY

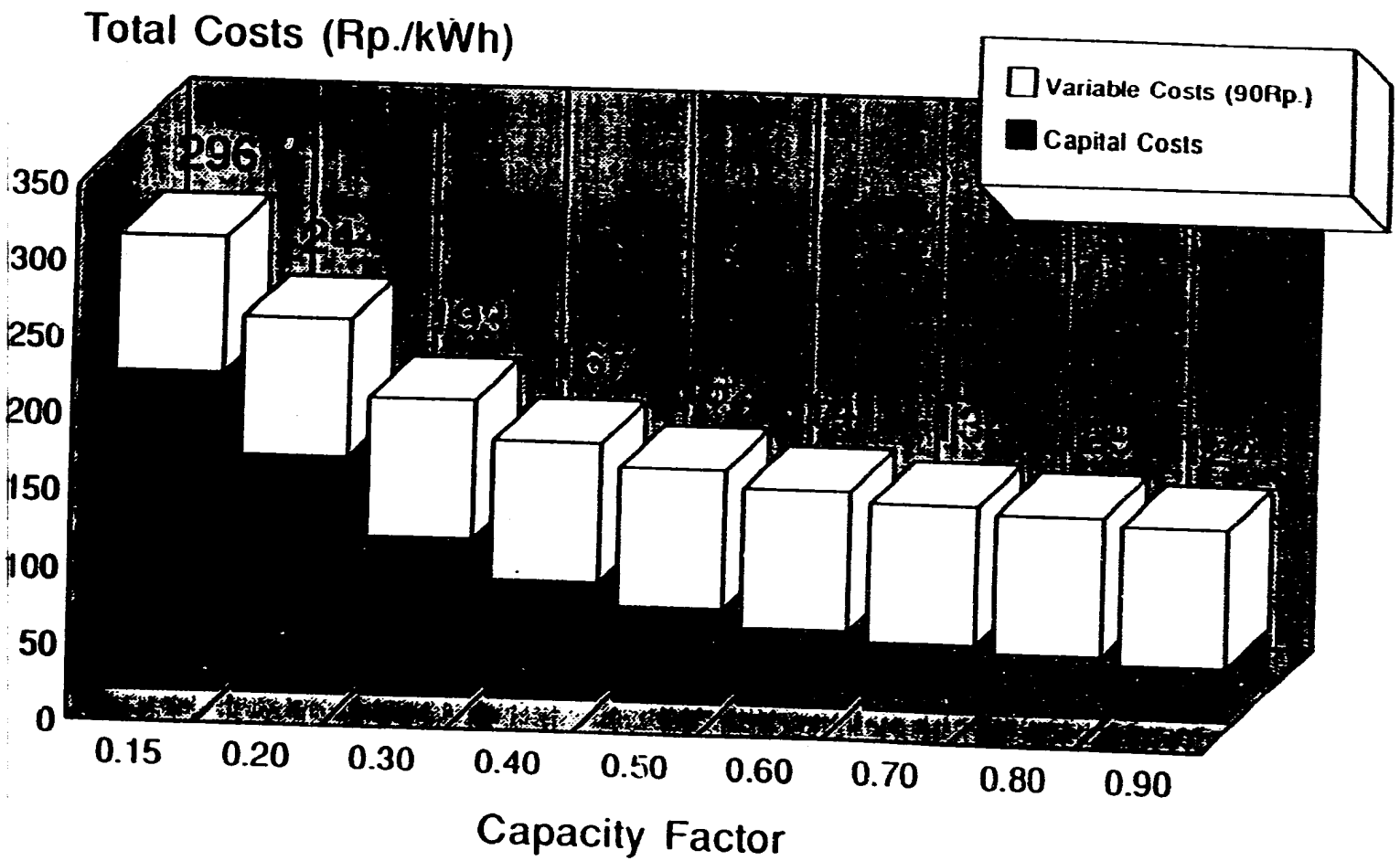

171

- **Ease of implementation** of the incentive tariff structure.

Efficiency Considerations

Avoided costs are the costs that the buyer -- PLN -- can defer as a consequence of the purchase. Avoided energy costs can be estimated as the incremental fuel and O&M cost (running cost) of the displaced generation plant.

In the case of generation capacity, the linkage between capacity cost and long-run marginal capacity cost can be illustrated by the following example. If PLN can avoid (defer) building 1 kW of additional peaking capacity because of a 1 kW "power purchase," then the avoided cost to PLN is the cost it would have incurred to build that capacity itself (i.e., its long-run marginal generation capacity cost).[6]

In addition, there may be an additional benefit (avoided cost) to PLN that stems from reduced network capacity requirements.

Estimates of PLN's marginal cost are developed in Chapter 3 of this report and provide the basis for establishing its avoided cost for the purposes of this study.

Financial Considerations

The transaction price should be set such that neither party to the transaction is a financial loser. First, from the captive power supplier's viewpoint, the price he receives must be sufficiently high as to be financially attractive. This means that the price should be, at a minimum, equal to the incremental variable cost of generation (fuel, variable O&M) plus a profit adder to make it worthwhile to engage in the DSM program given the additional operational and other difficulties inevitably involved in coordinating with the utility, in operating the program, for having to make adjustments to the process, and in making adjustments to other in-plant activities, schedules, and operations management.

Based upon the guiding considerations outlined above, the analysis of PLN's long-run marginal cost (Chapter 3), and the indicative cost structure of captive generation (Chapter 4), a two-part incentive tariff is proposed, as shown in Exhibit 4-8. This tariff primarily reflects the economic cost structure of PLN as developed in Chapter 3 (see Exhibit 3-10).

[6] This equivalence presumes that the power purchase is "firm" in nature, i.e., availability, dispatchability, and contract duration of the power purchase are predictable in magnitude and outcome, and that these parameters are consistent with the corresponding parameters for what the utility considers firm supply options.

BEST AVAILABLE COPY

Even in the case of a non-firm power purchase, the proposed incentive tariff discussed below is significantly higher than the seller's variable cost of supply, and should provide adequate financial incentives for participation in the program (e.g., a 5 MVA customer on Tariff I-4 will save nearly 8 percent of his monthly electricity bill per equivalent MW of non-firm energy provided to the grid on-peak).[7]

For firm power purchases, Exhibit 4-8 indicates that in addition to energy payments, the seller should receive a capacity-related payment as well. At this stage, it is recommended that this component of the payment be negotiated by PLN with the seller. The primary reason for this approach is grounded in the fact that the capacity and related costs of self-generation tend to vary substantially and are customer-specific.[8] Therefore, the suggested strategy of negotiation, with lower capacity payments being given initially and progressively increasing capacity payments in later stages of the program, will simulate a "bidding process" that orders supplies over time in order of increasing resource acquisition cost. This will help provide an economically efficient ordering of the power purchases secured, and with no one receiving a payment that equals or exceeds full avoided cost other than the marginal -- i.e., highest-cost -- captive generation resource selected, which gets the full avoided cost.

The equity implication of this simulated bidding approach[9] is that PLN -- and hence its ratepayers -- will benefit from any financial surplus generated in instances where the capacity payment is below the full avoided cost.[10]

By recommending a negotiating approach to setting capacity payments, it is not intended -- indeed, not recommended -- that PLN attempt to ascertain the fixed and variable costs of self-generation in the case of each customer who wishes to participate in the program.[11] This is a time-consuming exercise doomed to failure and will result in program failure since private industry will generally be reluctant to divulge its true cost, and many would prefer not to

---

[7] The issue of interconnection costs is addressed subsequently. In the case of interruptible options, however, these costs would be minimal.

[8] They depend upon unit size, performance characteristics, existing levels of utilization, etc.

[9] A full-blown market-based bidding approach is premature at this preliminary stage because the market for power purchases from non-utility generators is underdeveloped at present and an active competitive market does not yet exist.

[10] A surplus is defined as the difference between PLN's avoided cost and the price it pays to secure supply from others.

[11] Either independently or by requiring the potential participant to provide the necessary data and/or prove their validity.

BEST AVAILABLE COPY

Exhibit 4-8
Economic Tariff Structure for Peak Load Management DSM Programs

Contract	Voltage	Tariff Component	Peak	Off-Peak
1. Non-Firm Purchase	HV	Energy (Rp./kWh)	116	71
		Capacity (Rp./ckW-mo.)	--	--
2. Firm Purchase	HV	Energy (Rp./kWh)	116	71
		Capacity (Rp./ckW-mo.)	Minimum Suggested: 3,637 Maximum: 14,546	--
1. Non-Firm Purchase	MV	Energy (Rp./kWh)	127	76
		Capacity (Rp./ckW-mo.)	--	--
2. Firm Purchase	MV	Energy (Rp./kWh)	127	76
		Capacity (Rp./ckW-mo.)	Minimum Suggested: 6,156 Maximum: 24,624	--
1. Non-Firm Purchase	LV	Energy (Rp./kWh)	160	91
		Capacity (Rp./ckW-mo.)	--	--
2. Firm Purchase	LV	Energy (Rp./kWh)	160	91
		Capacity (Rp./ckW-mo.)	Minimum Suggested: 11,998 Maximum: 47,993	--

Source: Exhibit 3-10.
* To be structured in equivalent Rp./ckWh terms. See text for explanation.
Exchange rate: 2060-to-1.

BEST AVAILABLE COPY

participate in the program rather than engage in protracted negotiations or reveal confidential information. Nor is it intended that different captive generators be paid varying purchase prices.

Rather, the intent underlying the negotiated payment recommendation for capacity valuation is that PLN attempt to first secure the lowest-cost supplies and as these are exhausted, move up the supply curve to higher-cost supplies. For example, in the early stages, PLN should attempt to register those participants and secure capacity from those self-generators who are willing to accept, say, 25 percent of the full avoided cost. Once supply from these generators is exhausted, the capacity value in the tariff could be increased, to say, 50 percent of the full avoided capacity cost, with increases thereafter at appropriate times. Ultimately, it is in PLN's self-interest to pay up to the full avoided capacity cost,[12] if necessary, to secure on-peak firm power purchases. However, it is not necessary, or to the financial advantage of PLN and its ratepayers, to pay full avoided capacity cost to participants who would "come to the table," even if this capacity payment is lower than this maximum.[13]

To illustrate the financial incentive under a capacity value of Rp. 6,156/ckW-mo. at HV (i.e., 25 percent of full avoided capacity cost), consider again the example before wherein a 5 MVA contract demand customer offers to sell 1 MW of firm capacity on-peak. In this case, the captive power seller will receive an additional benefit of Rp. 12,321,000/month, for a total bill reduction of nearly 11 percent each month. As a percentage of the company's profit margin, this would typically represent a much higher amount.

When evaluating the power purchase tariff, it is relevant to consider whether captive power generation owners will seek recovery of only the variable cost of self-generation or will expect coverage for capital cost as well. Clearly, consumers who are considering the purchase of new equipment to meet self-generation needs will include capital cost in estimating the cost of self-generation. Even consumers with existing self-generation equipment must have considered full costs in making their original purchase decisions, although it may be argued

---

[12] Net of any transaction costs, e.g., if PLN incurs the capital cost for interconnection, then these costs, which are really the responsibility of the seller, must be recovered from the seller. This issue is addressed below.

[13] A related issue deals with the vintaging of payments: when the avoided cost capacity payment is raised subsequently, should it be applied to the new contracts only or to all existing contracts as well? This is a matter of regulatory policy. In the U.S., for example, contract prices for large and individually negotiated contracts are typically governed by the specific provisions of each contract and prevail throughout the duration of each contract. This is also a characteristic of the growing number of power purchase contracts entered into in a bidding process. By contrast, "standard offers" are posted prices with specified duration for validity, and are uniformly applicable to anyone willing to sell under such a tariff, whether they happen to be existing or new suppliers of power. They often are updated periodically using the declared method that is transparent and whose proper application is overseen by the regulatory authority that has oversight responsibility. Standard offers are typically utilized for the smaller sized power purchases (fractional megawatt up to a few megawatts).

BEST AVAILABLE COPY

that the annual operating decisions of these consumers will be based only on annual variable operating costs. However, to the extent that operation results in physical depreciation of the generator and a reduction in its future life, it can be argued that this cost is also taken into account in the annual operating decisions of consumers with existing generators.[14] If this depreciation rate is approximately the same as the annualized capital cost, and this is a reasonable supposition, it is total cost per kWh -- including capital cost -- which is the appropriate measure of the cost of captive generation.

In reality, potential program participants will expect recovery of all variable costs plus some coverage of fixed cost. The extent of fixed cost recovery demanded will be customer-specific, with some requiring more than others. The proposed graduated capacity payments will help to order the participation of the entire spectrum of such customers.

Paying for the Firm Capacity Purchase

In connection with the proposed capacity payments for "firm" purchases, proposed in Exhibit 4-8, it is relevant to draw attention to the issue of how to ensure that the supply is indeed firm. If payments are made on a Rp./ckW-mo basis, then PLN is exposed to the risk that the availability on-peak is lower than expected. In addition, this approach leads to additional metering and verification problems.

A simple and effective approach to this problem is to pay the selected capacity value on the basis of metered kWh on-peak. By structuring the capacity payment in equivalent Rp./on-peak kWh terms, the captive power generator has a strong incentive to maximize the availability of power on-peak. This can be seen from the following example.

To implement the proposed tariff structure, two energy meters could be installed to monitor the kWh supplied to the grid during the peak and off-peak hours. The kWh purchased on-peak would be credited the on-peak energy payment of Rp. 127/kWh, whereas the kWh purchased off-peak would be credited a payment of Rp. 76/kWh (Exhibit 4-8). In addition, the on-peak kWh would be credited a capacity value of Rp. 213.05/ckWh,[15] under the maximum capacity valuation of Rp. 24,624/ckW-mo, and 53.26 Rp./ckWh under the minimum suggested capacity valuation of Rp. 6,150/ckW-mo (Exhibit 4-8).

[14] This may be especially true in the situation faced by industry in Indonesia, where there is supply rationing by the grid and industry will have to rely on self-generation well into the foreseeable future. In other words, when a generator is retired, a replacement will need to be installed.

[15] Under the minimum.

BEST AVAILABLE COPY

Exhibit 4-9 shows the capacity-related payments actually received by the captive power supplier as a function of actual (metered) on-peak kilowatt hours (ckWh) supplied. To illustrate, consider the case where 115.58 kWh are actually supplied in a given month on-peak. This situation is comparable to 95 percent on-peak availability[16] and is comparable to the on-peak availability of PLN's gas turbines which provided the basis for establishing marginal generation capacity cost.

Therefore, if the capacity valuation is set at the minimum suggested in Exhibit 4-8 (Rp. 6,156/ckW-mo), the equivalent energy-based payment rate is 53.26 Rp./ckWh; calculated as 6,156/115.58).[17] What Exhibit 4-9 shows is that if the captive power supplier achieves on-peak availability (i.e., reliability) comparable to the utility's, the payment is equal to the full capacity valuation. However, if the captive power generator supplies 73 ckWh in a certain month (i.e., equivalent on-peak availability is only 60 percent), the capacity payment received that month is Rp. 3,888, which is substantially less than Rp. 6,156.

Exhibit 4-9
Capacity Payments Received by Captive Power Supplier
(HV)

Actual kWh Provided On-Peak (ckWh/mo)	Equivalent Availability On-Peak	Capacity Payment Received (Rp./mo)	
		Capacity Valuation Rp. 6,156/ckW-mo	Capacity Valuation Rp. 24,624/ckW-mo
119.23	98%	6,350	25,402
115.58	95%	6,156	24,624
109.50	90%	5,832	23,329
103.42	85%	5,508	22,034
97.33	80%	5,182	20,736
91.25	75%	4,860	19,441
85.17	70%	4,536	18,145
79.08	65%	4,212	16,848
73.00	60%	3,888	15,553
66.92	55%	3,564	14,257
60.83	50%	3,240	12,960

[16] Calculated as (1 kW x 4 hours/day x 365 days/year x 0.95 availability)/12 months.

[17] Under the maximum capacity valuation scenario (Rp. 24,624/ckW-mo), the equivalent energy-based payment rate is 213.05 Rp./ckWh, calculated as (24,624/115.58).

BEST AVAILABLE COPY

By the same token, the captive power generator can receive capacity payments in excess of Rp. 6,156. This can happen, for example, if actual supply is 119.23 ckWh in a given month. This corresponds to an equivalent on-peak availability of 98 percent (i.e., higher than the 95 percent used to establish the capacity valuation payment).

The energy-based payment approach for the capacity value, as illustrated above, is simple to implement (in a metering and administrative sense) and also provides easy-to-understand signals and incentives for the captive power generator to maximize the availability of on-peak power supplied,[18] which is the primary goal of the peak load management DSM programs of interest in the present context. Under this scheme, payment is based upon actual and easily verifiable performance as opposed to implementing a direct kW-based tariff and metering scheme.

Financial Implications for PLN

PLN's projected tariff yield for the system, i.e., billed revenue per unit of billed sales, averaged over all tariff categories, is approximately Rp. 135/kWh. By comparison, the power purchase tariffs proposed in Exhibit 4-8 are higher for firm purchases, even under the minimum suggested capacity payment of Rp. 6,156/ckW-mo. Thus, large-scale implementation of the proposed DSM program will result in revenue erosion and deterioration of PLN's financial performance. To avert this situation, as well as remove this disincentive for PLN, it is recommended that the costs of the power purchase, and other program costs incurred by PLN, in excess of the system-wide average tariff yield of Rp. 135/kWh, be treated as a legitimate cost in PLN's cost structure. PLN should recover these costs, as it does all other legitimate costs (fuel, salaries, investment, A&G, etc.), by adjusting its tariff yield of Rp. 135/kWh upward.

By way of illustrating this adjustment, suppose that a utility's total sales are 1,000 kWh at an average tariff yield of Rp. 135/kWh, yielding a total revenue of Rp. 135,000. Suppose further that the utility's demand grows by 10 kWh on-peak, and this can be supplied by a gas turbine at Rp. 250/kWh. In this case, the utility must raise its system-wide tariff yield to Rp. 136/kWh.[19] Alternatively, if the utility can supply the additional 10 kWh on-peak by purchasing the power from a captive generator, then it can afford to pay up to a maximum of Rp. 250/kWh as well, in which it must also increase the system-wide tariff yield to Rp. 136/kWh. If, however, it can strike a deal to buy the additional 10 kWh at a price less than Rp. 250/kWh (the cost it would incur to build its own peaking unit), then a proportionately

[18] Ultimately, reliability and availability are essentially equivalent.

[19] [1,000 kWh x Rp. 135/kWh + 10 kWh x Rp. 250/kWh] / 1010 kWh.

BEST AVAILABLE COPY

lower increase in the system-wide tariff yield would be required. The point is that the utility is better off in the long run, as it pays no more than its avoided cost (Rp. 250/kWh) for the power purchase. Furthermore, it should be allowed to recover the additional cost of power purchase that represents the difference by which the power purchase cost exceeds the current system-wide average yield (Rp. 135/kWh in the example above). This is permissible because such an adjustment in cost recovery would be necessary and allowed were the utility to build a gas turbine to meet the additional peak load of 10 kWh.

BEST AVAILABLE COPY

CHAPTER V: PILOT LOAD MANAGEMENT PROJECT PRE-FEASIBILITY ANALYSIS

This chapter identifies potential candidates for a pilot load management project to demonstrate the technical and economic feasibility of on-peak power purchases from captive generators. In close consultation with PLN, several potential candidates were screened, and two were identified for site visits.

5.1 SITE VISITS

Site visits were undertaken to two plants in order to understand first hand, the nature of electricity usage, captive power plant characteristics, ability to exploit in-process storage, to reschedule operations, or undertake process modifications that would alter the level and/or pattern of electricity demand, extent of excess captive generation capacity available, potential interest in participating in a pilot program, etc. Of the two plants selected, one is a PLN customer, whereas the other is not a PLN customer. For reasons of confidentiality, in the following, the customers' names are not identified.

Site #1 - Non-PLN Customer

This cement manufacturing plant is currently not connected to the PLN gird. The plant is located approximately 1 km from a PLN 150 kV transmission line, and 7 km from a substation. The electricity required to operate the cement plant is being supplied by two electric generating plants owned and operated by this company. They also sell approximately 2 percent of the total outputs of the two plants to some small industrial customers who are not PLN's customers.

The first generating plant has 14 generators with a total installed capacity of 80 MW. The sizes of the generators vary from 3.5 MW to 7 MW. All are medium-speed diesel units rated at 600 rpm. This plant operates at approximately 85 percent capacity factor to produce 67 MW of continuous power when all engines are on line. The second generating plant has 9 generators with a total installed capacity of 171 MW. The engines are the same size and are rated at 19 MW. All are 428 rpm medium-speed diesel units. This plant produces a maximum of 145 MW when all engines are on line.

The outputs of the two plants are synchronized to a common 33 kW bus that supplies the cement manufacturing plant and some small industrial customers. The cement plant currently utilizes 98 percent, or 150 MW of the total output. The bus voltage level is maintained strictly at a plus or minus 1 percent level to prevent voltage-sensitive equipment from being damaged. Both plants are maintained and operated on a 24 hour a day basis by a staff of 250 people.

BEST AVAILABLE COPY

The plant facilities manager was receptive to the idea of his company selling excess capacity during the on-peak hours of 18:00 p.m. to 22:00 p.m. to PLN. With a favorable purchase tariff, his company may be able to sell approximately 10 to 20 MW during the on-peak hours to PLN. However, he also indicated that several important issues such as interconnection costs, on-peak purchase tariff design, and system reliability must be clearly addressed in order for his company to consider selling power to PLN. With regard to the reliability issue, there must be sufficient protection in the design to assure that voltage-sensitive equipment will not be damaged since PLN allows a voltage fluctuation of 5 percent as compared to a more stringent 1 percent voltage fluctuation allowed by his company.

Site #2 - PLN Customer

This cement manufacturing plant is connected to the PLN grid via a 70 kV transmission network. PLN is providing all of the electrical requirements to operate the plant. The contract demand for this plant is approximately 30 MVA. The load demand profile for this plant remains constant at about 18 MW most of the time. The plant is operated 24 hours a day. There are two high-speed 150 rpm diesel generators rated at 1 MW installed capacity, which are used mainly for standby power. These generators are used to provide emergency backup power to the main building and other essential load in the event of a power failure by PLN.

Because this customer has only 2 MW of installed capacity, it is not cost-effective to synchronize the output of these generators to the PLN grid to allow the sale of excess power to PLN. However, by using these generators during the on-peak hours to serve their own load and also by backing down the finish grinding mill operations, they can reduce their on-peak demand by approximately 5 MW, provided the correct financial incentive exists.

The overall conclusion that emerged from the site visits and discussion with the plant facilities managers indicated that given a favorable on-peak purchase tariff, a potential exists to acquire up to 25 MW of on-peak power. This would be accomplished by: 1) providing a connection between the PLN grid and the non-PLN customer to purchase up to 20 MW of on-peak power and 2) interrupting approximately 5 MW of the manufacturing plant load that is a customer of PLN.

5.2 ENGINEERING DESIGN

This section outlines preliminary analyses of different configurations and options that can be utilized as a framework for PLN to purchase on-peak capacity from the above-mentioned industrial customers. Based upon a careful review of relevant data gathered during the site visits, the two options discussed in the following are the interruptible option and buy-back from non-PLN customers. The buy-back option would require the customer to synchronize

BEST AVAILABLE COPY

the output of the two generating plants to PLN's system. The interruptible option would only require the installation of load recording equipment to monitor the cut-back in demand by the customer during the on-peak hours. It is relevant to note that the intent of this report is to define a framework to determine the pre-feasibility of undertaking such a pilot project, and not conduct a detailed engineering analysis. A detailed analysis of the recommended configuration would require special follow-up studies that include the following:

- *Load flow studies* to analyze the thermal load of the transmission lines and other major system equipment during normal and contingency operations. The studies determine whether or not improvements to the utility's existing transmission system are required in order to handle the new or additional generating capacity.

- *Short-circuit studies* to assess the extent of increased fault duty on the utility's buses and the breakers due to the addition of generating capacity to the system. These studies determine whether or not existing circuit breakers in the system can still operate properly for system protection at higher fault current levels, and if improvements are required.

- *Stability studies* to determine the severity of the system disturbance that can result in generator instability and subsequent tripping. These studies enable the identification of an optimal configuration and point of connection to the utility network to minimize generator vulnerability to system disturbances. The stability study is usually performed when the size of the generator is approximately 5 MW or more.

Site #1: Non-PLN Customer Buy-Back Option

The output of the two power plants owned and operated by this captive power producer needs to be connected to the PLN grid in order for PLN to purchase excess capacity. In most cases, the design to connect the two systems depends heavily on the technical guidelines set forth by the utility for connecting the utility system to the captive power producer systems to assure adequate protections are included. For the purpose of this study, the operating guidelines are based on the guidelines commonly used by utilities in the United States. The guidelines include the following:

1. The design must include an automatic disconnecting device to isolate the customer's facility from the utility system for the following conditions:

   - a fault on the customer's equipment
   - a fault on the utility system
   - a de-energized utility line to which the customer is connected

BEST AVAILABLE COPY

- an abnormal operating voltage or frequency on the line
- loss of phase or improper phase sequence
- abnormal power factor.

2. The captive power producers are not allowed to energize a dead circuit on the system during a generator black start.

Based on the above operating requirements, two configurations have been developed to connect this customer to the PLN grid. The two configurations are labelled: integrated and dedicated.

Exhibit 5-1 shows the configuration of an integrated scheme. In this configuration, PLN will have to extend the 33 kV transmission line approximately 7 km from the nearest substation to the captive power plant. The output of the two generating plants will be connected to a common 33 kW bus that will supply the plant load. During the off-peak hours, the disconnect switch will be opened so that all output from the two plants will be used to supply the manufacturing plant. During the on-peak hours, the disconnect switch will be closed and the output of the two plants will gradually synchronize to the utility system. The output of the two plants will supply the manufacturing plant and the excess capacity will be purchased by PLN via the 33 kV transmission line.

This configuration will require the installation of three demand and energy metering systems to determine the energy sold to PLN by the captive power producer. Meters 1 and 2 will be used to measure the total output of the two generating plants. Meter 3 will be used to measure the kWh consumed by the manufacturing plant. The difference between the sum of Meters 1 and 2 less the kWh consumed by the plant is the new kWh sold to PLN by the captive power producer. In the event of a fault on the PLN system, the main breaker will close to allow the output of the two generating plants to continue serving the manufacturing plant load.

Exhibit 5-2 shows the configuration of a dedicated scheme. As in configuration-1, PLN is required to extend the 33 kV transmission line by 7 km from the substation to the captive power plant distribution system. In this configuration, a fixed number of generators will be dedicated for selling power to PLN during the on-peak hours. Assuming that this customer can sell 10 MW to PLN during the on-peak period, they could assign two generators, each rated at 3.5 MW and one rated at 7 MW, from generating plant #1 for this purpose. The output of the three generators will be connected to a separate 33 kV bus, which will be tied with the utility's 33 kV system. The output of the remaining generators of plant #1 and the output of all generators from plant #2 are connected to the captive power's own 33 kV bus.

During the off-peak hours, the disconnect switch is opened and breaker B is closed to allow the output of the two plants to serve the load of the manufacturing plant. During the on-peak hours, the disconnect switch is closed and breaker B is opened to: 1) allow the output of the dedicated generators to be sold to PLN via the 33 kV tie line with the PLN system and 2) to

BEST AVAILABLE COPY

Exhibit 5-1
Buy Back from Non-PLN Customer
Configuration 1 - Integrated Scheme

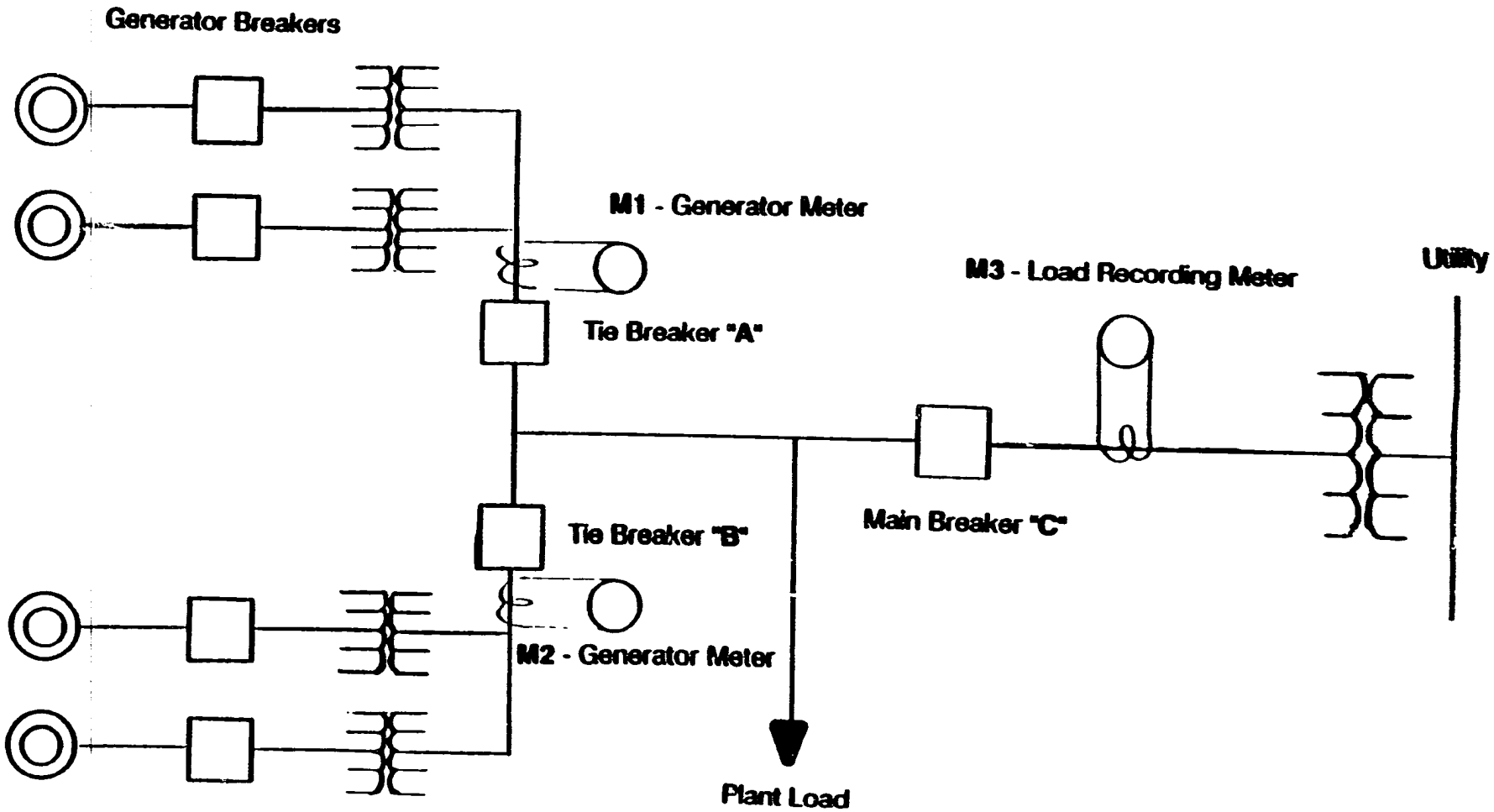

BEST AVAILABLE COPY

Exhibit 5-2
Buy Back from Non-PLN Customer
Configuration 2 - Dedicated Scheme

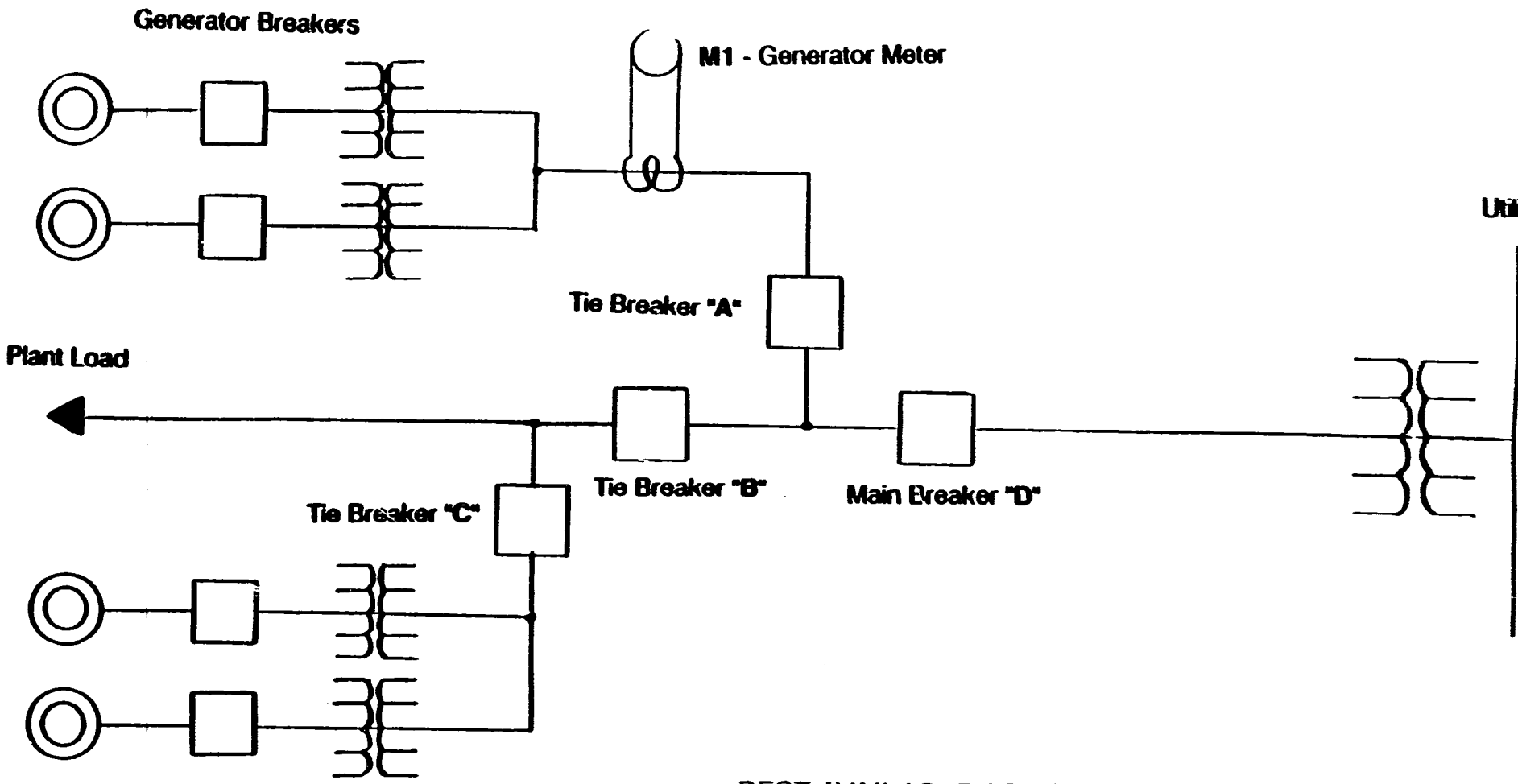

BEST AVAILABLE COPY

isolate the output of the remaining generators from plant #1 and the output of plant #2 to continue to serve the manufacturing plant. This configuration would require only the dedicated generators to be synchronized with the PLN system. One meter is required to measure the output of the dedicated generators to account for kWh sales to PLN. The main breaker will provide protection to the captive power producer as well as PLN in the event of a fault on either PLN or the captive power system.

There are advantages and disadvantages associated with these two configurations. The advantage of configuration-1 is that in the event of a failure in the captive power's two generating plants, PLN may be able to provide backup to the captive power to allow normal operation of the manufacturing plant. The disadvantage is that the main breaker will trip frequently due to high voltage fluctuations in the PLN system. This is due to the fact that PLN's operating guidelines allow a plus or minus 5 percent voltage fluctuation, which is significantly higher than the plus or minus 1 percent voltage fluctuation allowed by the captive power producers. The advantage of configuration-2 is that since only the output of the dedicated generators are connected to the PLN system, the rest of the captive power producer's distribution system remains independent of the PLN system. The problem with the high voltage fluctuation in the PLN system is no longer a concern of the captive power system. The disadvantage is that PLN is not able to provide backup to the captive power system in the event of a failure to the captive power's generating system.

Of the two configurations, configuration-2 is recommended for the following reasons:

- It allows the captive power producer to operate their system very much the same as before, but have the ability to sell their excess capacity to PLN during the on-peak hours.
- The high voltage fluctuation in the PLN system will not have any impact on the captive power's own distribution system.
- Only one metering point is required for the accounting of kWh sales to PLN.

Exhibit 5-3 shows a variant of the dedicated scheme (configuration-2). This scheme relies on a bi-directional meter placed on the utility side of the customer-utility interface. This option, we understand, is consistent with PLN's current policies regarding meter location and reading responsibility.

Site #2: PLN Customer - Interruptible Option

Since this customer is already connected to the PLN network, only minor enhancements and additions to the existing system are required to allow PLN to reduce power supply to this customer during the on-peak hours. Exhibit 5-4 shows the existing configuration of the

BEST AVAILABLE DOCUMENT

Exhibit 5-3
Buy Back from Non-PLN Customer
Variant Dedicated Scheme

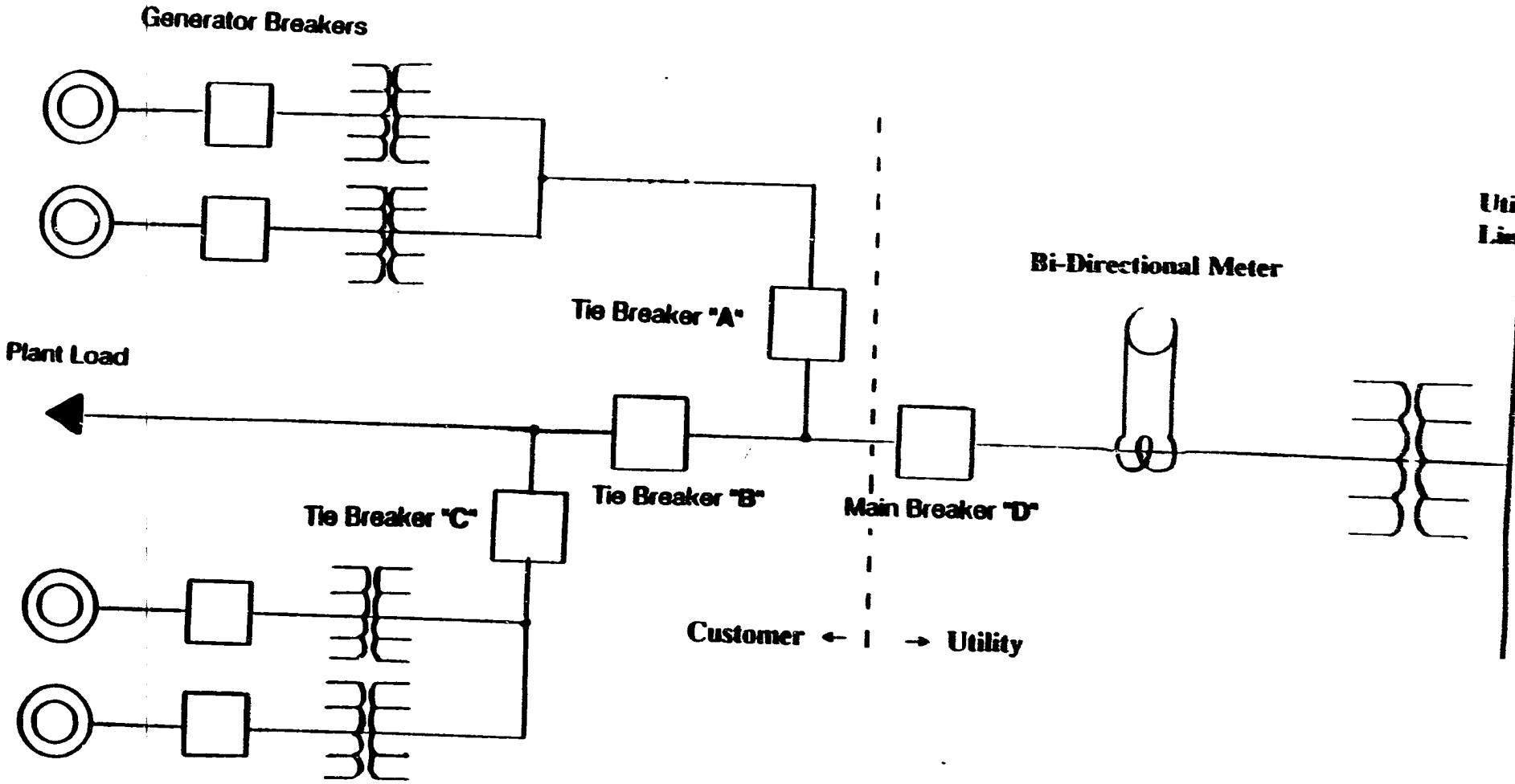

BEST AVAILABLE DOCUMENT

Exhibit 5-4
Configuration for Interruptible Option

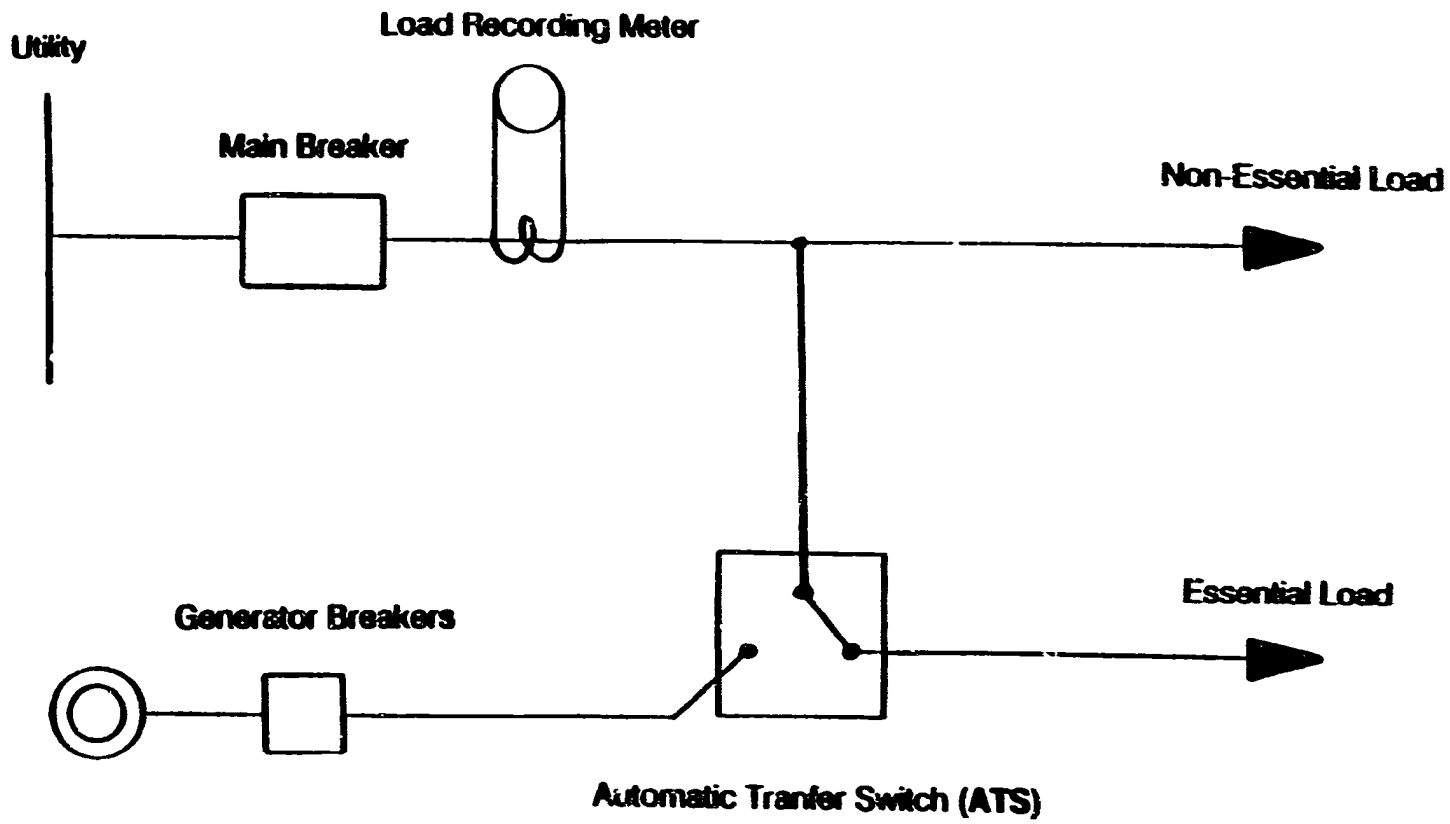

BEST AVAILABLE DOCUMENT

Exhibit 5-1
Buy Back from Non-PLN Customer
Configuration 1 - Integrated Scheme

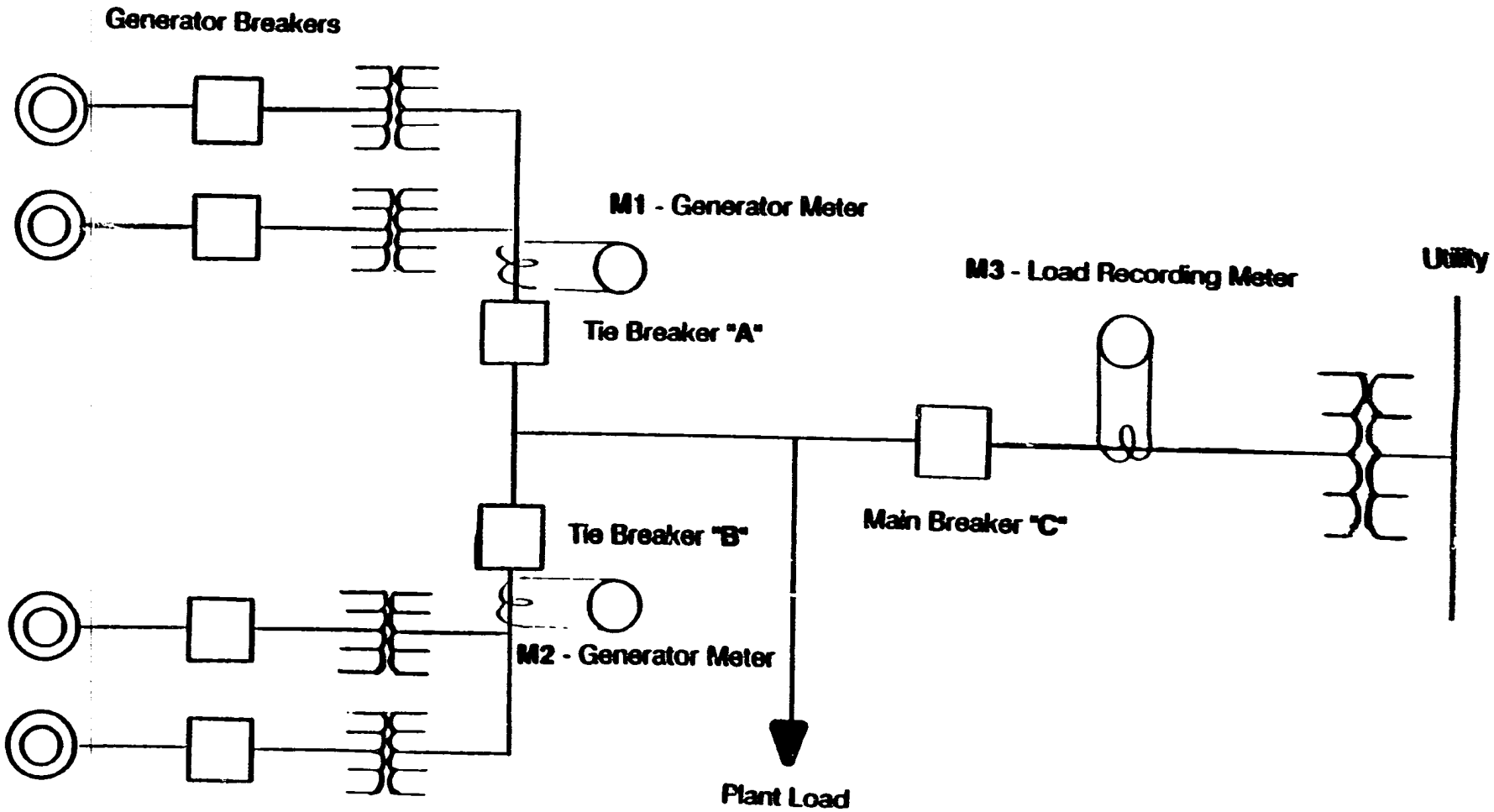

BEST AVAILABLE COPY

Exhibit 5-2
Buy Back from Non-PLN Customer
Configuration 2 - Dedicated Scheme

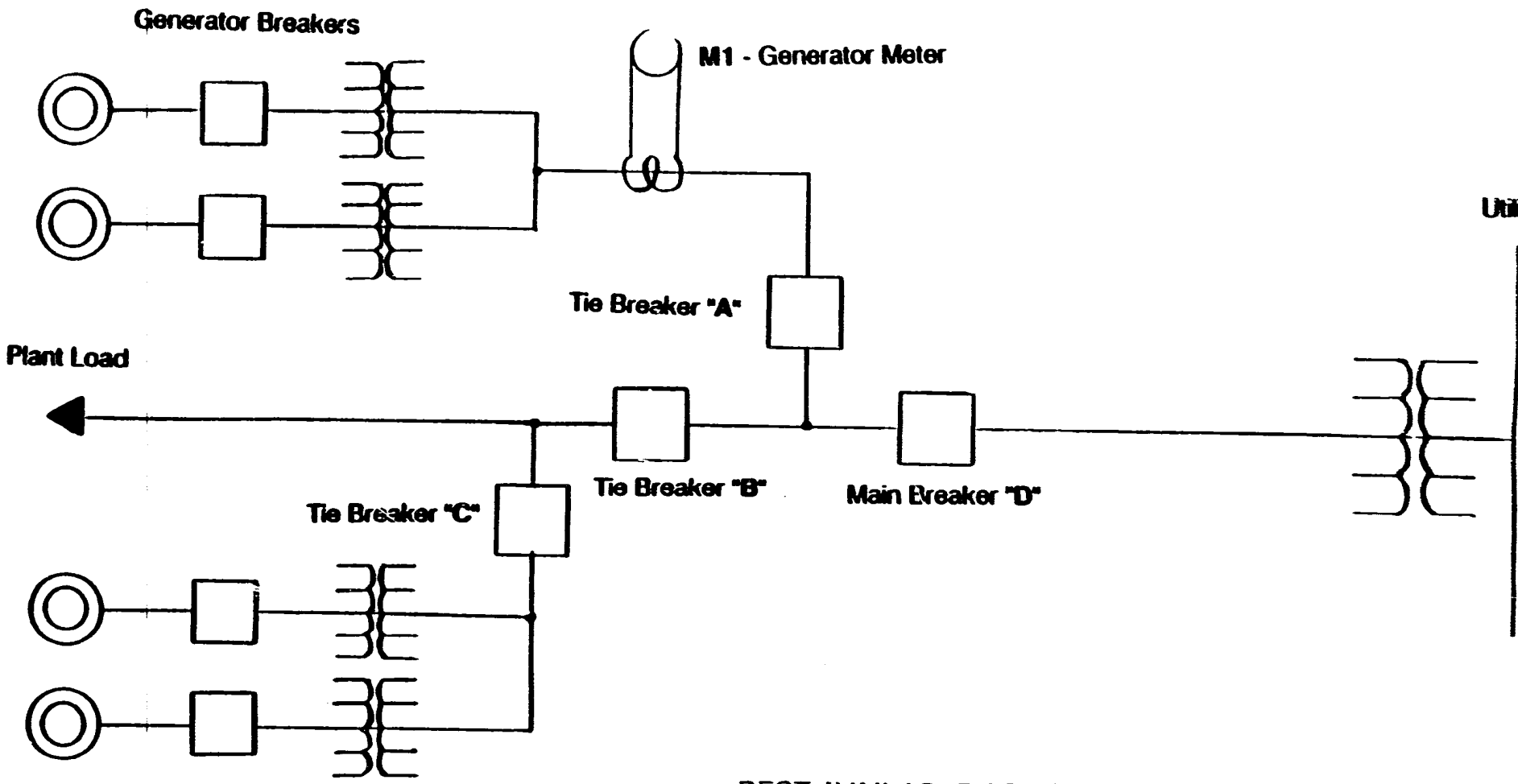

BEST AVAILABLE COPY

Exhibit 5-4
Configuration for Interruptible Option

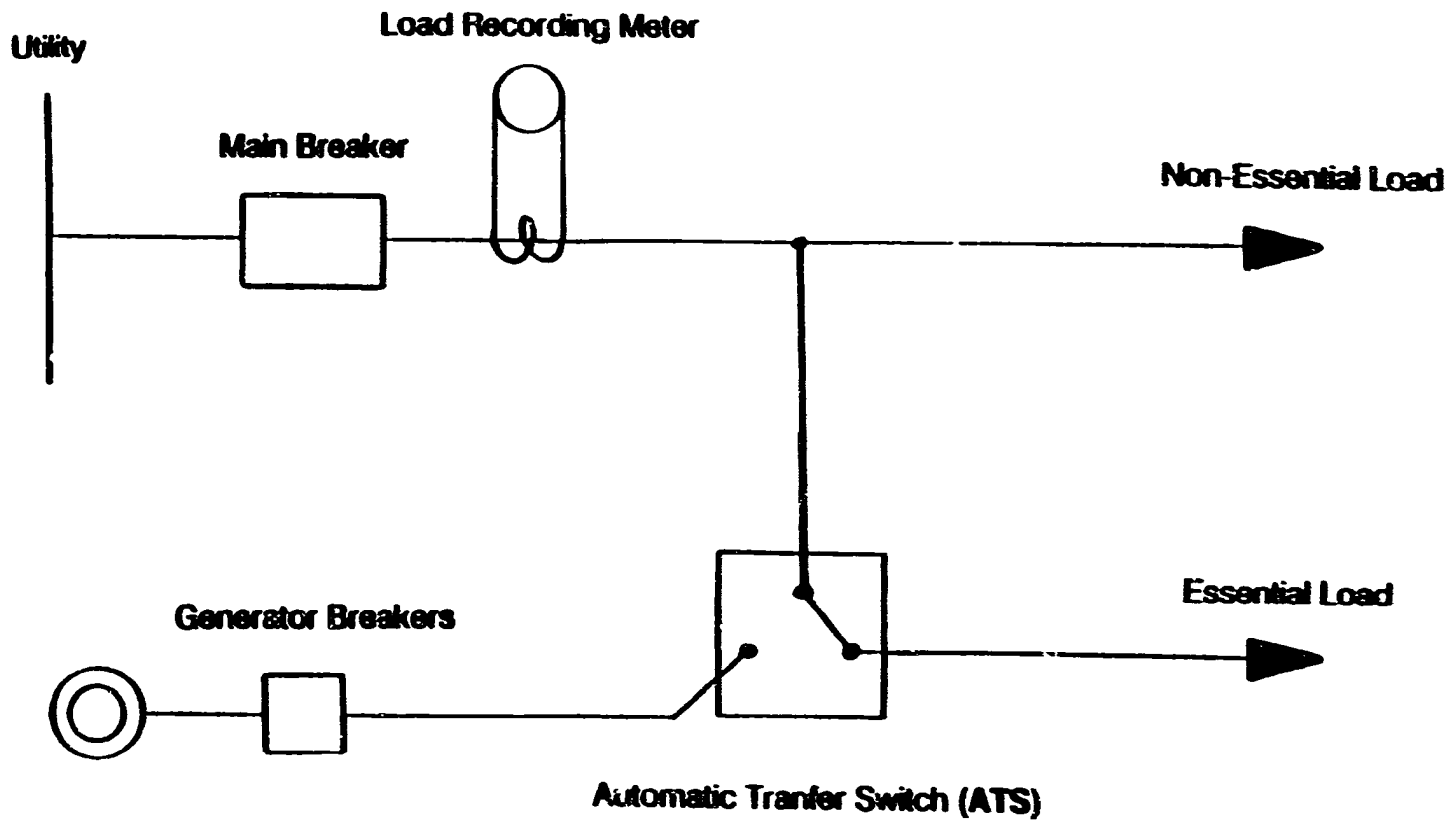

BEST AVAILABLE DOCUMENT

system, with the exception of the load recording meter. In the existing configuration, the two backup generators are controlled by an automatic transfer switch (ATS). The load of the plant is separated into essential and non-essential load. In the event of a power failure, the ATS will open the tie to the utility network and allow the two generators to come on-line to serve the essential load. This configuration remains the same except for one modification; the backup generators will have to come on line during on-peak hours. Concurrently, this customer will have to back down the finishing mill operations to reduce the overall electrical demand of the plant. The metering equipment will record the daily load data of the plant. The data will then be analyzed by PLN personnel to determine the kW and kWh reduction contributed by the plant for accounting purposes.

5.3 COST/BENEFIT ANALYSIS

Exhibit 5-5 shows the cost/benefit to PLN and the captive power producers based on different capacity payment levels. The proposed capacity payments are based on different percentages of the total capacity credit available.

For the buy-back option, the connection costs include the equipment costs and installation costs for the main breaker "D," the tie breaker "B," and the meter to record the output from the dedicated generators. In addition, there will be another expense to PLN to extend the 33 kV transmission line from the substation to the distribution system of the cement manufacturing plant.

The equipment cost for two rebuilt 2000 amp circuit breakers and one recording meter system is approximately $350,000. This consists of two (2) rebuilt 2000 amp Westinghouse 500 kV, outdoor, 500 Hz skid-mounted, pneumatically operated, 125 V DC close and trip, 20,000 A I.C. main circuit CTs, weighing 29,500 lbs with oil, and a relay panel. The relay panel should be equipped with: (1) kW meter, (1) PF meter, (1) ammeter, (3) 67 relay, (1) 67 N relay, (1) C/S, (1) synchronous switch, (1) 43A, (1) set of synchronizing CTs, (1) metering unit, 3-CTs and 2 PTs, (1) 2000 amp, 33 kV disconnect switch, 3 pole, gang operated structure for mounting, (1) structure. The equipment will be guaranteed for one year. The installation cost is approximately $50,000. The projected total cost for this configuration is $400,000.

We recommend using rebuilt equipment for the following two reasons. First, the costs of rebuilt equipment are approximately half the cost of new equipment. Second, rebuilt equipment is very reliable and usually has the same guarantee time as new equipment. Many industries with cogeneration equipment facilities in the U.S. are choosing rebuilt equipment for their facilities over new equipment for these reasons. For the purpose of conducting a pilot study, it is practical to use the rebuilt equipment to reduce the capital costs of the project.

BEST AVAILABLE DOCUMENT

Exhibit 5-5
Costs/Benefits Analysis of Case Study

Option	Fuel and Variable O&M Cost of Captive Generation (Rp/kWh)[1]	Costs to PLN for System Inter-connection (Rp/ckWh)[2]	Proposed PLN Purchase Tariff[3]			Effective Tariff for On-Peak Purchase[4] (Rp/ckWh)	Payment to Captive in Excess of O&M and Inter-connection Costs (Rp/kWh)	Net Benefits to PLN (Rp/ckWh)
			On-Peak Energy (Rp/ckWh)	Capacity Payment (% of Avoided Cost)	Capacity Payment (Rp/ckWh)			
Buy-Back Option (10 MW)	90	23	127	0	0	127	14	202
				25	51	178	65	152
				50	101	228	115	101
				75	152	279	166	51
				100	202	329	216	0
Interruptible Option (5 MW)	90	1	127	0	0	127	36	202
				25	51	178	87	152
				50	101	228	137	101
				75	152	279	188	51
				100	202	329	238	0

1 Exhibit 4-7.
2 Includes costs for interconnecting captive power's distribution system with PLN's system. This cost, however, does not include the costs to extend the 33 kV transmission line (see Exhibit 5-6).
3 Exhibit 4-8.
4 Interconnection costs will be deducted from the payment to captive power producers.

BEST AVAILABLE DOCUMENT

Assuming that the interconnection cost would be incurred by PLN, and further assuming a three-year contract, at a 12 percent discount rate and a forward exchange rate of Rp. 2060 per $1, the annual payment is Rp. 343,071,560. Assuming the plant will produce 14,600,000 kWh annually,[1] the average capacity cost per kWh is Rp. 23.

If PLN were to provide 50 percent of the marginal capacity costs to them during the on-peak hours as capacity credit for captive power producers, the benefit to PLN would be Rp. 101 for every kWh PLN purchases from the captive power producers on-peak. The captive power producers would realize Rp. 115 for every peak kWh sold to the PLN system, in excess of their fuel and other variable costs of generation (Exhibit 5-5).

The interruption option would only require the installation of load recording equipment at a cost of approximately $6,300. The load data recorded by the meter will need to be analyzed by PLN to determine the kWh reduction achieved by the customer. Assuming the customer can reduce the on-peak demand by 5 MW, this translates to a reduction of 7,300,000 kWh of on-peak energy. By financing the cost of metering equipment over a three-year period at a 12 percent discount rate, the average cost per kWh is Rp. 1. For this option, the benefit to PLN would be Rp. 101 for every on-peak kWh reduced by the customer. The captive power producer realizes Rp. 137 per ckWh in excess of its fuel and other variable generation costs (Exhibit 5-5).

Based upon the two site visits, it appears that most potential program participants will not want to be responsible for installing the selected interconnection configuration. PLN has the expertise to undertake this, and it may also be able to procure the required equipment more cheaply if it bought in bulk. Given that PLN incurs the equipment and installation cost for metering and interconnection, it will need to recover these costs over the life of the contract. This can be achieved as a reduction in the total monthly payments made to the captive power generator for power purchases by PLN, and would be shown as a separate debit line item after tallying up credits for energy and capacity purchased. Exhibit 5-6 shows estimates of this cost component (expressed as Rp./ckWh, assuming 100 percent availability on-peak), as a function of interconnection costs, on-peak contract capacity, and life of contract. For firm power contracts, a minimum duration of three years is recommended, since that is the minimum lead time needed by PLN to install a gas turbine for peaking capacity support. In implementation, it is recommended that the interconnection cost incurred by PLN be deducted on a monthly basis from the total energy and capacity cost payments due to the captive power generator. The interconnection costs should be shown as a separate line item that is debited against the credits due from the power sold by the captive power plant in that month. Exhibit 5-7 shows the monthly payments to be debited for interconnection costs as a function of PLN's investment and contract duration.

[1] 10 x 1000 x 4 x 365.

BEST AVAILABLE DOCUMENT

Exhibit 5-8
Time Line for Pilot Load Management Project (Months)

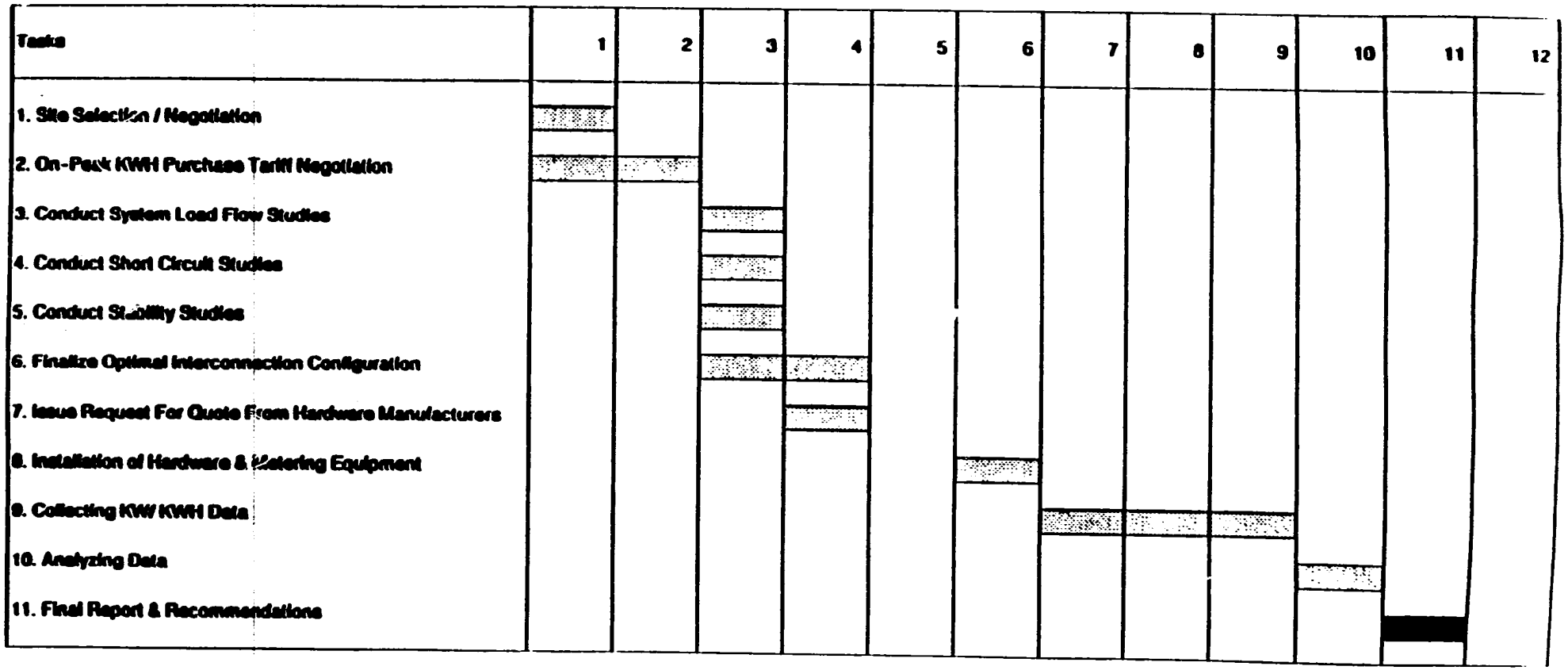

BEST AVAILABLE DOCUMENT

CHAPTER VI: REFERENCES

1. Beca Worley International. *Report on Private Power Generation in Indonesia: Indonesia Power Planning Project.* July 1990.

2. Beca Worley International. *Update Report on Captive Power in Indonesia.* April 1991.

3. Munasinghe, Mohan and Arun P. Sanghvi. *Recent Developments in the U.S. Power Sector and Their Relevance for Developing Countries.* Energy Series Paper No. 12, World Bank, February 1989.

4. PLN. *Electricity Pricing 1989/90 Based on LRMC Approach.* Review, April 1990.

5. PLN. *Study for the Utilization of Capital Power into the PLN Network System.* Internal report, System Planning Department. English translation dated April 1991.

6. POTJATEK. *Investigation on Generation Expansion Plan of Java-Bali System, 1991/1994 - 2003/04.* February 1991.

7. Sanghvi, Arun P. *Pricing Framework and Methodology for Electricity Purchases and Sales Related to Non-Utility Power Transactions.* Final report submitted by RCG/Hagler, Bailly, Inc. to the Private Power Team, DGENE, and USAID, Office of Energy and Infrastructure, November 1991.

8. Sudja, Nengah. "Electric Power Supply in Indonesia: Development Plan and Major Issues Toward the 21st Century." Paper presented at the Fifth Meeting of General Planning, Managers of Power Utilities, Bali, November 1989.

9. Wirjosapuro, Mochtar. "Current Outlook of Electricity Supply and Demand Situation in Java-Bali and Its Prospects." DGENE paper presented at UNDP/ESCAI Workshop on Load Dispatching and Demand (Load) Management, Bangi, Malaysia, July 29, 1991.

10. World Bank. *Core Report of the Electric Power Utility Efficiency Improvement Study.* IENED, Energy Series Paper No. 46, September 1991. This study was partially funded by USAID's Office of Energy and Infrastructure.

11. P.T. Indomas Mulia. *Studi Pemanfaatan Captive Power, Pada Sistem Ketenavgalistrakan Di Jawa-Bali.* Report submitted to DGENE, February 1992.

BEST AVAILABLE DOCUMENT

Exhibit 5-6

Interconnection Costs in Rp./kWh Based on On-Peak Contract Capacity
(Based on Three-Year Recovery of Investment)

INTER-CONN. COSTS ($)	CONTRACT CAPACITY (KW)									
	1000	2000	3000	4000	5000	6000	7000	8000	9000	10000
100,000	59	29	20	15	12	10	8	7	7	6
200,000	117	59	39	29	23	20	17	15	13	12
300,000	176	88	59	44	35	29	25	22	20	18
400,000	235	117	78	59	47	39	34	29	26	23
500,000	294	147	98	73	59	49	42	37	33	29
600,000	352	176	117	88	70	59	50	44	39	35
700,000	411	206	137	103	82	69	59	51	46	41
800,000	470	235	157	117	94	78	67	59	52	47
900,000	529	264	176	132	106	88	76	66	59	53
1,000,000	587	294	196	147	117	98	84	73	65	59
1,100,000	646	323	215	162	129	108	92	81	72	65
1,200,000	705	352	235	176	141	117	101	88	78	70
1,300,000	764	382	255	191	153	127	109	95	85	76
1,400,000	822	411	274	206	164	137	117	103	91	82
1,500,000	881	441	294	220	176	147	126	110	98	88

Note: Assumed 12 percent discount rate and 100 percent on-peak availability.

BEST AVAILABLE DOCUMENT

Exhibit 5-6 (Continued)
Interconnection Costs in Rp./kWh Based on On-Peak Contract Capacity
(Based on Four-Year Recovery of Investment)

INTER-CONN. COSTS ($)	CONTRACT CAPACITY (KW)									
	1000	2000	3000	4000	5000	6000	7000	8000	9000	10000
100,000	46	23	15	12	9	8	7	6	5	5
200,000	93	46	31	23	19	15	13	12	10	9
300,000	139	70	46	35	28	23	20	17	15	14
400,000	186	93	62	46	37	31	27	23	21	19
500,000	232	116	77	58	46	39	33	29	26	23
600,000	279	139	93	70	56	46	40	35	31	28
700,000	325	163	108	81	65	54	46	41	36	33
800,000	372	186	124	93	74	62	53	46	41	37
900,000	418	209	139	105	84	70	60	52	46	42
1,000,000	465	232	155	116	93	77	66	58	52	46
1,100,000	511	255	170	128	102	85	73	64	57	51
1,200,000	557	279	186	139	111	93	80	70	62	56
1,300,000	604	302	201	151	121	101	86	75	67	60
1,400,000	650	325	217	163	130	108	93	81	72	65
1,500,000	697	348	232	174	139	116	100	87	77	70

Note: Assumed 12 percent discount rate and 100 percent on-peak availability.

BEST AVAILABLE DOCUMENT

Exhibit5-6 (Continued)
Interconnection Costs in Rp./kWh Based on On-Peak Contract Capacity
(Based on Five-Year Recovery of Investment)

INTER-CONN. COSTS ($)	CONTRACT CAPACITY (KW)									
	1000	2000	3000	4000	5000	6000	7000	8000	9000	10000
100,000	39	20	13	10	8	7	6	5	4	4
200,000	78	39	26	20	16	13	11	10	9	8
300,000	117	59	39	29	23	20	17	15	13	12
400,000	157	78	52	39	31	26	22	20	17	16
500,000	196	98	65	49	39	33	28	24	22	20
600,000	235	117	78	59	47	39	34	29	26	23
700,000	274	137	91	68	55	46	39	34	30	27
800,000	313	157	104	78	63	52	45	39	35	31
900,000	352	176	117	88	70	59	50	44	39	35
1,000,000	391	196	130	98	78	65	56	49	43	39
1,100,000	431	215	144	108	86	72	62	54	48	43
1,200,000	470	235	157	117	94	78	67	59	52	47
1,300,000	509	254	170	127	102	85	73	64	57	51
1,400,000	548	274	183	137	110	91	78	68	61	55
1,500,000	587	294	196	147	117	98	84	73	65	59

Note: Assumed 12 percent discount rate and 100 percent on-peak availability.

BEST AVAILABLE DOCUMENT

202

Exhibit 5-7
Payments for Interconnection Costs Recovery
(Rp./Month)

Interconnection Costs ($)	Recovery of Investment (Years)		
	3	4	5
100,000	7,147,324	5,651,858	4,762,200
200,000	14,294,648	11,303,716	9,524,401
300,000	21,441,972	16,995,573	14,286,601
400,000	28,589,297	22,607,431	19,048,802
500,000	35,736,621	28,259,289	23,811,002
600,000	42,883,945	33,911,147	23,573,202
700,000	50,031,269	39,563,005	33,335,403
800,000	57,178,593	45,214,863	38,097,603
900,000	64,325,917	50,866,720	42,859,804
1,000,000	71,473,242	56,518,578	47,622,004
1,100,000	78,620,566	62,170,436	52,384,204
1,200,000	85,767,890	67,822,294	57,146,405
1,300,000	92,915,214	73,474,152	61,908,605
1,400,000	100,062,538	79,126,010	66,670,806
1,500,000	107,209,862	84,777,867	71,433,006

Note: Assumed 12 percent discount rate.

BEST AVAILABLE DOCUMENT

Next Steps

The results of the pre-feasibility analyses indicated that it is economical for PLN to purchase excess power from the captive power producers to serve PLN's system demand during the on-peak hours of 18:00 p.m. to 22:00 p.m. instead of adding peaking generating capacity. It is recommended that a pilot load management project be implemented so that a detailed study of the economic benefits and demonstration of technical feasibility of using captive power to serve PLN's on-peak load can be achieved. The pilot project will also enable PLN to "fine tune" the purchase tariffs for a broader implementation of the proposed DSM program concepts for peak load management. The study should take approximately 12 months to complete. Exhibit 5-8 identifies the major tasks and the projected time required to complete these tasks.

BEST AVAILABLE DOCUMENT

This publication was made possible through support provided by the Office of Energy and Infrastructure, Bureau for Research and Development, U.S. Agency for International Development. The opinions expressed herein are those of the author(s) and do not necessarily reflect the views of the U.S. Agency for International Development.

BEST AVAILABLE DOCUMENT

The Office of Energy and Infrastructure

The Agency for International Development's Office of Energy and Infrastructure plays an increasingly important role in providing innovative approaches to solving the continuing energy crisis in developing countries. Three problems drive the Office's assistance programs: high rates of energy use and economic growth accompanied by a lack of energy, especially power in rural areas; severe financial problems, including a lack of investment capital, especially in the electricity sector; and growing energy-related environmental threats, including global climate change, acid rain and urban pollution.

To address these problems, the Office of Energy and Infrastructure leverages financial resources of multilateral development banks such as The World Bank and the InterAmerican Development Bank, the private sector and bilateral donors to increase energy efficiency and expand energy supplies, enhance the role of private power, and implement novel approaches through research, adaption and innovation. These approaches include improving power sector investment planning ("least-cost " planning) and encouraging the application of cleaner technologies that use both conventional fossil fuels and renewable energy sources. Promotion of greater private sector participation in the power sector and a wide-ranging training program also help to build the institutional infrastructure necessary to sustain cost-effective, reliable and environmentally sound energy systems integral to broad-based economic growth.

Much of the Office's strategic focus has anticipated and supports recently enacted congressional legislation directing the Office and A.I.D. to undertake a "Global Warming Initiative" to mitigate the increasing contribution of key developing countries to greenhouse gas emissions. This strategy includes expanding least-cost planning activities to incorporate additional countries and environmental concerns, increasing support for feasibility studies in renewable and cleaner fossil energy technologies that focus on site-specific commercial applications, launching a multilateral global energy efficiency initiative and improving the training of host country nationals and overseas A.I.D. staff in areas of energy that can help reduce expected global warming and other environmental problems.

The Office also helps developing countries speed their economic development through promoting technology cooperation between U.S. suppliers and developing country companies, institutions and governments. This effort involves Business Opportunity Identification to define and analyze the range of commercially viable trade and investment opportunities, technologies and services that have a positive impact on the environment and are appropriate for developing countries: Venture Promotion to encourage the involvement of the U.S. private sector: Innovative Finance: and Policy Development assistance to developing counties as they pursue policy and regulatory changes to provide market incentives for environmentally beneficial technologies.

To pursue these activities, the Office of Energy and Infrastructure implements the following six projects: (1) Biomass Energy Systems and Technology Project (BEST); (2) The Renewable Energy Applications and Training Project (REAT); (3) The Private Sector Energy Development Project (PSED); (4) The Energy Training Project (ETP); (5) The Energy Technology Innovation Project (ETIP); and (6) The Energy Efficiency Project (EEP).

The Office of Energy and Infrastructure helps set energy policy direction for the Agency, making its projects available to meet generic needs (such as training), and responding to short-term needs of A.I.D.'s field offices in assisted countries.

Further information regarding the Office of Energy and Infrastructure projects and activities is available in our Program Plan, which can be requested by contacting:

Office of Energy and Infrastructure
Bureau for Research and Development
U.S. Agency for International Development
Room 508, SA-18
Washington, D.C. 20523-1810
Tel: (703) 875-4052

BEST AVAILABLE DOCUMENT

TAB 7

Mexico:

- **Electrical Energy Public Service Law**
- **Regulations of the Electric Power Public Service Law**

ELECTRICAL ENERGY PUBLIC SERVICE LAW

(Published in the "Official Gazette" of December 22, 1975).

Presidency of the Republic.

LUIS ECHEVERRIA ALVAREZ, Constitutional President of the United States of Mexico, to its inhabitants, be it known:

That (unintelligible) Congress of the Union, the following has been directed to me:

DECREE:

"The Congress of the United States of Mexico, Decrees:

ELECTRICAL ENERGY PUBLIC SERVICE LAW

CHAPTER I

General Resolutions

ARTICLE 1. It is the exclusive responsibility of the Nation to generate, conduct, transform, distribute, and supply electrical energy which has as its purpose the provision of public service, in the terms of Article 27 of the Constitution. In this realm, concessions to private persons shall not be granted and the Nation shall avail itself of the assets and material resources which may be necessary for said purposes through the Federal Electricity Commission.

ARTICLE 2. All acts related to the public electrical energy service are of the public order.

Reprinted for reforms in the "Official Gazette" of December 27, 1983, and to suppress the foot of leaf "D". (Remittance number 1 of 1984).

ARTICLE 3. The self-supply of electrical energy to satisfy private interests, individually considered, is not considered public service.

ARTICLE 4. For the purposes of this Law, the provision of public electrical energy service includes:

I. The planning of the national electrical system;

II. The generation, conduction, transformation, distribution, and sale of electrical energy, and;

III. The realization of all projects, installations, and work required for the planning, execution, operation, and maintenance of the national electrical system.

BEST AVAILABLE DOCUMENT

ARTICLE 5. (Reformed by the sole article of the decree of December 15, 1983, published in the "Official Gazette" of the 27th day of that same month and year, and which took effect on the following day, to read as follows):

ARTICLE 5. The Secretariat of Energy, Mines, and Parastatal Industry shall dictate, in accordance with national energy policy, the arrangements regarding the public provision of electrical energy, which must be complied with and observed by the Federal Electricity Commission and by all physical or moral persons who participate in the production process.

ARTICLE 6. (Reformed by the sole article of the decree of December 15, 1983, published in the "Official Gazette" of the 27th day of the same month and year, and which took effect the following day, to read as follows):

ARTICLE 6: For the purposes of the preceding article, the Secretariat of Energy, Mines, and Parastatal Industry shall (illegible), the programs which the Federal Electricity Commission may submit for consideration, in relation to the acts foreseen in Article 4. All technical aspects related to the generation, transmission, and distribution of electrical energy shall be the exclusive responsibility of the Federal Electricity Commission.

CHAPTER II

Of the organ responsible for the provision of public electrical energy service

ARTICLE 7. The Federal Electricity Commission shall be in charge of the provision of public electrical energy service that is the responsibility of the Nation. The Federal Electricity Commission shall assume the responsibility for carrying out all activities to which Article 4 refers.

ARTICLE 8. The Federal Electricity Commission is a decentralized public organ with juridical personality and its own patrimony.

ARTICLE 9. The Federal Electricity Commission has as its purpose:

I. To provide public electrical energy service as described by Article 4 and in accordance with Article 5;

II. (Reformed by the SOLE article of the decree of December 15, 1983, published in the "Official Gazette" of the 27th day of the same month and year, which took effect the following day, to read as follows):

II. To propose to the Secretariat of Energy, Mines, and Parastatal Industry the programs to which Article 6 refers;

BEST AVAILABLE DOCUMENT

III. To import and export, exclusively, electrical energy;

IV. To formulate and promote to the Federal Executive the programs for operation, investment, and financing which, in the short, medium, or long term, may be required for the provision of public electrical energy service;

V. To promote scientific research and national technology in the field of electricity;

VI. To promote the development and national manufacture of equipment and materials which can be utilized in the public electrical energy service;

VII. To celebrate agreements or contracts with Governments of the Federated Entities and Municipal Governments or with public and private entities or physical persons, for the realization of acts related to the provision of public electrical energy service;

Reprinted for reforms in the "Official Gazette" of December 27, 1983, and to suppress the foot of leaf "C". (Remittance number 1 of 1984).

VIII. To carry out all operations, to take all actions, and to celebrate all contracts as may be necessary for the achievement of its purpose; and

IX. All others which may be set forth by this law and its regulations.

ARTICLE 10. (Reformed by the sole article of the decree of December 15, 1983, published in the "Official Gazette" of the 27th day of the same month and year, and which took effect the following day, to read as follows):

ARTICLE 10. The Federal Electricity Commission shall be governed by a Government Council formed by the Secretaries of Treasury and Public Credit, of Commerce and Industrial Development, of Agriculture and Hydraulic Resources, of Programming and Budget, and of Energy, Mines, and Parastatal Industry, who shall preside. The Director General of Mexican Petroleum and three representatives of the unionized electrician plant workers, who shall be responsible for the areas of planning, operation, and construction.

The members of the Government Council shall name their own alternates. The Government Council shall designate a secretary from the Council.

Oversight of the Organ shall be entrusted to a Council composed of three members, with their corresponding alternates, to be appointed and freely removed by the incumbents in the Secretariats of the Comptroller General of the Federation and of Energy, Mines, and Parastatal Industry, as well as by a representative designated by the Government Council.

BEST AVAILABLE DOCUMENT

The Oversight Council shall be coordinated by the representative of the Secretariat of the Comptroller General of the Federation and shall have the broadest of powers to examine all documentation related to the management of the Entity, as well as to perform all other acts as may be required for the adequate fulfillment of its functions, without prejudice to the powers assigned by the applicable regulations to the Dependencies of the Public Federal Administration in their respective spheres of competence, in the fields of control, oversight, and evaluation of Parastatal Entities.

The Oversight Council Coordinator shall have the right to attend, with voice, the meetings of the Government Council of the Federal Electricity Commission.

ARTICLE 11. The Government Council shall hold valid sessions and its decisions shall be obligatory when the majority of its members are present. Decisions shall be made by a majority of votes. In the event of a tie, the President shall have the determining vote.

ARTICLE 12. The Government Council shall:

I. Approve, respectively, the proposed annual rate plan and the proposed annual expenditure budget;

At its discretion, the Council may approve proposed triennial or five-year rate plans and expenditure budgets;

II. Approve, respectively, the patrimonial and annual financial status;

III. (Reformed by the SOLE article of the Decree of December 15, 1983, published in the "Official Gazette" of the 27th day of the same month and year, which took effect the following day, to read as follows):

III. Approve, respectively, the programs which must be subjected to authorization by the Secretariat of Energy, Mines, and Parastatal Industry, as described by Article 6;

IV. Approve, respectively, the internal regulations of the organization and the proposed functional structure and its eventual modifications, or of the organizational systems of the Federal Electricity Commission, as may be proposed by the Director General;

V. Designate the Directors or Managers of the various areas of activity, at the suggestion of the Director General;

VI. (Reformed by the SOLE article of the Decree of December 15, 1983, published in the "Official Gazette" of the 27th day of the same month and year, and which took effect the following day, to read as follows):

BEST AVAILABLE DOCUMENT

VI. Agree upon proposed rate adjustments, which should be formulated in accordance with the patrimonial and financial state of the Organization;

VII. Approve, as needed, the proposal for rate restructuring;

VIII. Approve, respectively, the program for training, education, and development of human resources as proposed by the Director General;

IX. Remain informed of the petitions which may be formulated by the unionized workers of the institution as regards the collective employment contract, keeping in mind the financial situation of the Federal Electricity Commission;

Reprinted for the second time for Reforms in the "Official Gazette" of December 31, 1986. (Remittance number 1 of 1987).

X. Resolve any matter which may be submitted for its information by any of its members or the Director General; and

XI. Ensure compliance with all legal orders which govern the Federal Electricity Commission;

XII. (Created or added by the twenty-first article of the law that establishes, reforms, adds, and repeals diverse fiscal regulations, published in "Official Gazette" of December 31, 1986, which took effect January 1, 1987, to read as follows):

XII. To oversee, supervise, and ensure that the contributions made by the Federal Government derived from substitution of debts of the Organization are destined to the purpose established in this Law".

ARTICLE 13. The patrimony of the Federal Electricity Commission includes:

I. The rights, movable and immovable goods to which it holds title to date, which are included, and which it may in future acquire by any title;

II. The rights to the natural resources which it may be assigned by the Federal Executive, as necessary for the fulfillment of its purpose;

III. The fruits it may obtain from its assets and the net operating result;

IV. The product of the taxes and rights which are specifically assigned to it in accordance with the respective laws;

V. The income from the sale and provision of scientific and technological services, from advising, and other services; and

BEST AVAILABLE DOCUMENT

VI. The contributions which the Federal Government may award it.

VII. (Created or added by the SOLE article of the Decree of December 15, 1983, published in the "Official Gazette" of the 27th day of the same month and year, and which took effect the following day, to read as follows):

VII. The contributions from the governments of the federative entities, municipalities, and beneficiaries of the public electrical energy service for the carrying out of specific works, augmentation, or modification of the existing ones, when requested by these entities.

The respective regulation shall establish the cases and the conditions in which the requestors of the service shall be required to pay fees independently of the rates assigned for the sale of electrical energy and in the regulations related to the supply of the same in accordance with the following general guidelines:

a) When several technically feasible solutions exist for the supply of a service, the solution which is least expensive for the user shall be considered, even in cases where the Federal Electricity Commission, for reasons of convenience for the national electrical system, opts to create another alternative;

b) The Federal Electricity Commission may construct lines which exceed the capacity required by the requestor, but the latter shall only be obligated to pay the charge which corresponds to the specific line or charge requested;

c) If in the same zone, requests for service are submitted in groups, the Federal Electricity Commission shall study the possibility of offering a joint solution, in which it would attempt to have part of the specific lines be integrated in a common line. In that case the fee for each requestor shall correspond to the sum of the proportional part of the common line and the cost of the specific line. The proportional part of the common line shall be determined as a function of the charge-length of each application with respect to the sum of the charge-length of all the applications;

d) Improvements to the infrastructure required for the provision of individual service shall be exempt from payment or fees when the distance between the post or meter of the closest existing low tension net to the requestor's installations is less than two hundred meters;

e) Once the user has accepted the respective estimate in cases where the formulation of an estimate is required, the corresponding agreement shall be drawn up in accordance with the model approved by the Secretariat of Energy, Mines, and Parastatal Industry and in which shall be specified the service to be provided, the time period for the completion of the necessary work,

BEST AVAILABLE DOCUMENT

the fee to be charged, and the form of payment of the fee;

f) Electrification project for rural communities that are carried out with the collaboration of the governments of the federative entities shall be subjected to the programs and budgets previously approved and to the regulations that may be applicable based on the coordination agreements which may be established;

g) The periodic payments to be made for fee payment shall be approved by the Secretariat of Energy, Mines, and Parastatal Industry and may be revised by request of the Federal Electricity Commission, the State governments, and the respective municipalities.

Reprinted for reforms in the "Official Gazette" of December 27, 1983, and to suppress the foot of leaf "B". (Remittance number 1 of 1984).

ARTICLE 14. The President of the Republic shall designate the Director General, who shall represent the Organization with the following obligations and powers:

I. To comply with the programs referred to by Articles 4, 5, and 6 of this law.

II. Power to carry out acts of administration as described by the second paragraph of article 2554 of the Civil Code for the Federal District in common material and for the entire Republic in federal material.

III. General power for disputes and collection, with all the general faculties as well as with the special faculties as may be required in accordance with the law. Power or special clause as described by the first paragraph of article 2554 of the cited Civil Code, except the power to absolve positions. He shall be empowered as well to desist from protection;

IV. Powers for acts of ownership, in accordance with the terms agreed upon by the Government Council;

V. Powers to sign and award credit titles in accordance with the terms of article 9 of the General Law of Titles and Credit Operations;

VI. (Reformed by the SOLE article of the Decree of December 15, 1983, published in the "Official Gazette" of the same month and year, and which took effect the following day, to read as follows):

VI. To award general or special powers, to authorize those to whom the powers are granted to absolve positions and exercise his mandate before persons and authorities, including the performance of administrative acts with regard to labor matters, delegating his powers of legal representation so that in the name of the Organization they may appear at reconciliation, demand, and

BEST AVAILABLE DOCUMENT

exception hearings and other labor proceedings and trials; as well as to bring suit against, grant pardon by the offended party, desist from the judgment of protection, and to revoke said powers.

VII. To execute the resolutions of the Government Council;

VIII. To submit to the Government Council the projects, studies, proposals, and programs referred to by sections I, II, III, IV, VI, VII, and VIII of article 12;

IX. To name the trusted personnel (senior personnel) of the Organization for positions not expressly reserved to the Government Council;

X. To resolve matters not reserved to the Government Council;

XI. To attend meetings of the Government Council, with voice; and

XII. All others which the Government Council may decide to award him.

ARTICLE 15. The internal regulations of the organization shall establish the functional areas or systems of organization and the powers and obligations of their directors.

BEST AVAILABLE DOCUMENT

CHAPTER III

On the participation and training of workers

ARTICLE 16.-- Electrical workers shall participate in the organization and operation of the Federal Committee on Electricity in order to increase productivity, the social and professional awareness of workers and technicians, as well as to make the best use possible of the human, technical, material and financial resources of the institution.

ARTICLE 17.-- Within the purview of the aforementioned article, joint consulting committees on industrial operation are created, which shall operate in accordance with the following rules:

I.-- They shall be composed in each functional structure or organizational system of a representative of the Federal Committee on Electricity and a representative of the workers;

II.-- Preferably, they shall study the problems related to the development and training of the workers, productivity, responsibility and safety in the workplace; and

III.-- They shall have at their disposal all the institutional information and facilities they may require in their task.

ARTICLE 18.-- The operation of the Joint Committees on Industrial Operation shall be governed by their respective bylaws.

Reprinted because of amendments in the "Official Journal" of December 27, 1983, and to delete footnote "C".- (Remittance Number 1 of 1984).

BEST AVAILABLE DOCUMENT

ARTICLE 19.-- The Federal Committee on Electricity shall promote the technical development and professional training of its workers, in order to improve their skills, productivity, responsibility and safety in the workplace.

CHAPTER IV

On Physical Works and Facilities

ARTICLE 20.-- (Amended by the sole article of the decree of December 15, 1983, published in the "Official Journal" of December 27, 1983, in force on the following day, to remain as follows):

ARTICLE 20.-- The physical works and facilities necessary for the rendering of the electric power public service, shall be bound by the specifications issued by the Federal Committee on Electricity and approved by the Semi-state Secretariat of Energy, Mining and Industry, and by the periodical inspection of said institution.

ARTICLE 21.-- The Federal Committee on Electricity shall maintain its facilities in an adequate manner for the rendering of the electric power public service, in accordance with continuity, efficiency and safety standards.

ARTICLE 22.-- In order to carry out the physical works and installations necessary for the rendering of the electric energy public service, the Federal Committee on Electricity shall:

I.-- As far as its technological development allows, implement the makeup of its own technical personnel;

II.-- Tend to the standardization of equipment and accessories;

III.-- Preferably stock up on national products manufactured by decentralized institutions, state participation companies or private companies.

ARTICLE 23.-- For the acquisition or use of real estate intended for the rendering of the electric power public service, the expropriation, temporary, total or partial occupation, or the limitation of the rights of fee simple ownership, if applicable, shall be in order with the prior statement of public benefit issued in accordance with the respective statutes. The constitution of easement shall be governed by the provisions ot the Federal order Civil Code.

When the real property is owned by the Federation, the states or the city councils, the Federal Committee on Electricity shall submit the applications legally required.

ARTICLE 24.-- The Federal Committee on Electricity may carry out in the streets, roadways, gardens, squares and other public

BEST AVAILABLE DOCUMENT

places, the necessary works for the installation, maintenance and removal of aerial and underground lines, as well as of equipment intended for the service. These works shall be carried out following appropriate safety measures and in such a manner as not to obstruct, unless it is inevitable, the use of the aforementioned places. Upon completion of said works, the Federal Committee on Electricity shall make the pertinent repairs.

CHAPTER V

On the Supply of Electric Power

ARTICLE 25.-- (Amended by the sole article of the decree of December 15, 1983, published in the "Official Journal" of December 27, 1983, in force on the following day to remain as follows):

ARTICLE 25.-- The Federal Committee on Electricity shall supply electric power to anyone requesting it, unless there is a technical obstacle or financial reasons to do so, without establishing any kind of preference within each rate classification.

The bylaws shall determine the requisites that the person requesting the service must meet, and shall set the appointed dates to enter into the contract and set up the connection of the services by the Committee.

ARTICLE 26.-- Interruption of the electric power supply shall take place in the following cases:

I.-- Due to lack of timely payment for the electric power supply during a normal billing period;

II.-- When the use of electric power is made through installations altering or preventing the normal operation of the control or measuring instruments;

Reprinted because of amendments in the "Official Journal" of December 27, 1983, and to delete footnote "D".- (Remittance Number 1 of 1984).

BEST AVAILABLE DOCUMENT

III.-- When the installations of the user do not comply with the regulatory technical standards; and

IV.-- When the use of the electric power is found to be under conditions violating the provisions of the respective contract.

ARTICLE 27.-- The Federal Committee on Electricity shall not incur liability for electric power service interruptions arising from:

I.-- An act of God or unavoidable accident;

II.-- The performance of maintenance works, normal repairs, extension or modification of its facilities; and

III.-- Bad workmanship in the user's facilities.

In the cases provided for in subparagraph II, the Federal Committee on Electricity shall report the interruption of the service to the affected users under the terms set forth by the bylaws of this statute.

ARTICLE 28.-- (Amended by the SOLE article of the decree of December 15, 1983, published in the "Official Journal" of December 27, 1983, in force on the following day, to remain as follows):

ARTICLE 28.-- It is the responsibility of the person requesting the service to carry out, at his own expense and responsibility, the works and installations intended for the use of electric power, which shall meet the technical and safety requisites provided for in the bylaws.

Before the execution of said works and installations, the pertinent projects must be drawn up in accordance with the guidelines and standards established by the Secretariat of Commerce and Industrial Promotion. Without detriment to the powers of said Secretariat to verify compliance with the established requisites, the approval of the Secretariat shall only be required for electrical installations for industries, high-voltage services, supply in places of public assembly, buildings intended for several users, and in areas considered dangerous, in accordance with the aforementioned rules.

NOTE.- PAGES 12 bis and 12 bis 1 ARE DELETED, THE FOLLOWING PAGE IS 12-1

BEST AVAILABLE DOCUMENT

The Federal Committee on Electricity shall only supply electric power after it has verified that the installations referred to in the previous paragraph have been approved by the Secretariat of Commerce and Industrial Promotion.

ARTICLE 29.-- (Amended by the SOLE article of the decree of December 15, 1983, published in the "Official Journal" of December 27, 1983, in force on the following day, to remain as follows):

ARTICLE 29.-- Only the materials, components, devices, machinery, equipment or systems intended for the use of electric power, whatever their origin, whose technical and safety features, as well as their instructions, warnings, and, if applicable, warranties, have been previously approved by the Secretariat of Commerce and Industrial Promotion, shall be sold and used in the Mexican Republic.

ARTICLE 30.-- (Amended by the SOLE article of the decree of December 15, 1983, published in the "Official Journal" of December 27, 1983, in force on the following day, to remain as follows):

ARTICLE 30.-- The sale of electric power shall be governed by the rates approved by the Public Credit and Treasury Department.

The conditions of the rendering of services to be stipulated in the supply contracts and the model agreements thereof, shall be approved by the Secretariat of Commerce and Industrial Promotion, in agreement with the Semi-state Secretariat of Energy, Mining, and Industry. Said forms of contract shall be published in the "Official Journal" of the Federation.

ARTICLE 31.-- (Amended by the SOLE article of the decree of December 15, 1983, published in the "Official Journal" of December 27, 1983, in force on the following day, to remain as follows):

ARTICLE 31.-- The Public Credit and Treasury Department, in agreement with the Secretariats of Programming and Budget, and of Commerce and Industrial Promotion, with the participation of the Semi-state Secretariat of Energy, Mining and Industry, and as a result of a proposal made by the Federal Committee on Electricity, shall set the rates, their adjustment or rescheduling, in such a way that they tend to cover the financial needs and the extension requirements of the public service, without failing to consider the criteria regarding a fair social distribution of the overhead production costs and the reasonable consumption of energy.

BEST AVAILABLE DOCUMENT

Also, and through the aforementioned procedure, the Public Credit and Treasury Department may set special rates for peak hours, minimum consumption hours or a combination of both.

ARTICLE 32.-- (Amended by the SOLE article of the decree of December 15, 1983, published in the "Official Journal" of December 27, 1983, in force on the following day, to remain as follows):

ARTICLE 32.-- The adjustment, modification and rescheduling of rates shall involve the automatic modification of the supply contracts that may have been entered into.

Rates shall in no case be applicable until they have been published in the "Official Journal" of the Federation and at least in two daily newspapers of nationwide circulation.

ARTICLE 33.-- (Amended by the SOLE article of the decree of December 15, 1983, published in the "Official Journal" of December 27, 1983, in force on the following day, to remain as follows):

ARTICLE 33.-- The users of the electric power public service shall guarantee the obligations they assume in the supply contracts they enter into, through deposits whose amount shall be determined by the supplementary rules of the respective rates. Said deposits shall be furnished and kept in the Federal Committee on Electricity.

The Federal Committee on Electricity may accept securities other than the deposits in cases of well-known, proven creditworthiness of the user and with the prior specific request of the latter.

ARTICLE 34.-- The electric power supply contract shall be terminated:

I.-- Due to the will of the user;

II.-- Due to the change of the nature or characteristics of the contract involving the application of various rates;

III.-- Due to the change of owner or leaseholder of the property, industry or commerce, should they be users; and

IV.-- Due to lack of payment of the debt causing the interruption, within the following fifteen calendar days as of the date the interruption was made.

ARTICLE 35.-- Once the supply contract has been terminated, the Federal Committee on Electricity shall be entitled to apply in its favor the amount of the security in the pertinent ratio. The balance, if applicable, shall be made available to the user.

ARTICLE 36.-- (Amended by the SOLE article of the decree of December 15, 1983, published in the "Official Journal" of December

BEST AVAILABLE DOCUMENT

27, 1983, in force on the following day, to remain as follows):

ARTICLE 36.-- The Semi-state Secretariat of Energy, Mining and Industry, in agreement with the Federal Committee on Electricity, shall grant an electric power self-provision permit aimed at meeting the specific needs of natural or artificial persons individually considered. For these permits to be granted, the indispensable condition shall be the impossibility or the inconvenience of the electric power service supply by the Federal Committee on Electricity. The cases provided for in the following paragraphs of this article are exempted from this condition, as well as the case of power plants exclusively intended for use in emergencies caused by interruptions in the electric power public service.

The Secretariat shall also grant the pertinent self-provision permits when the following requisites are met:

a) That with the generation of the self-provision plant the efficiency of transformation of primary energetic products, based on the simultaneous production of other secondary energetic products, or on the use of heat sources derived from industrial processes;

b) That the process used in the generation of electricity may produce another or other secondary energetic products required to meet the needs of the user, such as steam, or use energetic products obtained during some industrial process, such as blast furnace gas; and that the electricity is intended to meet the specific needs of natural or artificial persons, individually considered, the surplus being placed at the disposal of the Federal Committee on Electricity under the terms of subparagraph d) of this article;

c) That the works and installations for the production of electric power are carried out and operated in accordance with the technical specifications issued by the Semi-state Secretariat of Energy, Mining and Industry, following the proposals of the Federal Committee on Electricity;

d) That the person requesting the permit agrees to grant the necessary facilities to the Federal Committee on Electricity, in order that the latter may use the surplus electricity that may result after the user has met his self-provision needs, as long as this can be used by said institution for the purposes constituting its object, in adequate technical and economic conditions, and without detriment to or interference with the production processes of the permit holder, in accordance with the studies and programs approved to that effect.

In the aforementioned agreements entered into by the Federal Committee on Electricity and the permit seekers, the pertinent payment for the supply of the surplus electricity shall be agreed upon;

BEST AVAILABLE DOCUMENT

The aforementioned agreements shall be submitted to the Secretariat, in each case, for approval. The Secretariat shall also monitor the exact compliance of said agreements by both parties.

ARTICLE 37.-- The holders of permits granted based on the previous article shall be bound to contribute, to the extent of their possibilities, electric power for the public service, when, for reasons of force majeure or an unavoidable accident, the public service is interrupted or restricted and only for the time the interruption or restriction last.

ARTICLE 38.-- The permits referred to in article 36 shall have an indefinite duration as long as the purposes for which they were granted, as well as the public convenience to carry them out, remain and the applicable statutory regulations are complied with. These permits may not be transferred or exploited either totally or partially, or for valuable consideration or for free.

ARTICLE 39.-- (Amended by the SOLE article of the decree of December 15, 1983, published in the "Official Journal" of December 27, 1983, in force on the following day, to remain as follows):

ARTICLE 39.-- The Semi-state Secretariat of Energy, Mining and Industry shall inspect and monitor all works or installations intended for the self-provision of electric power.

BEST AVAILABLE DOCUMENT

OF ELECTRIC POWER

Sanctions

ART. 40 -- (Reformed in its first paragraph by the ONLY article of the decree of December 15, 1983, published in the "Diario Oficial" the 27th of the same month and year, in effect the next day to remain as follows):

ART. 40. - With the exceptions referred to in article 21, second paragraph of the Political Constitution of the United States of Mexico, without detriment to the penalties that correspond to the resulting offence or offenses, there will be administrative sanctions with a penalty of up to three times the value of the electrical power consumed, sold or resold beginning on the date when the offence was committed in the cases referred to in Subparragraphs I and V. In the case of the offenses foreseen in subparragraph VI, the penalty will be three times the general minimum daily wage in effect for the Distrito Federal for each of the plant's kilowatt's capacity to self-supply. In the case of Subparragraph VII, the penalty will be from two to one hundred times de value of said minimum salary.

I. - To whomever shall, without authorization connect his/her private electrical power lines to the general lines of the Federal Power Commission or to another private line fed by said lines;

II.- To the user consuming electrical power by installations which alter or obstruct the normal performance of the measuring instruments or the control of the electrical power supply;

III.-To whomever shall consume electrical power without having entered into a respective contract;

IV.- To whomever shall utilize electrical power in a way or quantity not authorized by their supply contract;

V.- (Reformed by the ONLY Article of the Decree of December 15, 1983, published in the "Diario Oficial" on the 27th of that same month and year, in effect the next day, to remain as follows):

V. To whomever shall sell or resell electrical power;

VI.- To whomever shall install self-supplying plants without the authorizations referred to in article 36 of this law; and

VII.- To whomever shall incur in any other offence to the dispositions of this law or its regulations.

N. del M.- The following paragraphs were created or added by the ONLY article of the decree of December 15 1983, published in the "Diario Oficial" on the 27th of the same month and year, in effect the next day, to remain as follows:

BEST AVAILABLE DOCUMENT

The penalties shall be dictated by the Department of Industrial Commerce and Development (Secretaria de Comercio y Fomento Industrial) , for the offenses committed stated in subparagraphs I to IV inclusive; by the Government's Department of Energy, Mines and Industry, (Secretaria de Energia, Minas e Industria Paraestatal), in the cases of subparragraphs V and VI; by the qualified Department for the offenses referred to in subparragraph VII.

The Goverment's Department of Energy, Mines and Industry will adopt measures conducive to facilitating the regulations of electrical power services in favor of persons of low income who have incurred in the offenses referred to in subparagraphs I to III of this article, so long as they can demonstrate entitlement before the qualified authorities of the legal possession of the respective property, subject to the conditions of the supply of the service in a transitory manner and for the period determined and subject to the procedures required by the case.

ART.-41 The repeat offender will receive a penalty equivalent to double the amount fined the first time. The offender committing contumacy will be penalized for an amount equivalent to tripple that which was applied the first time as well as the temporary or permanent suspension of service.

ART.42.- (Reformed by the ONLY article of the decree of December 15, 1983, published in the "Diario Oficial" on the 27th of that same month and year, in effect the next day, to remain as follows):

ART.42 .- The imposition of the sanctions referred to in articles 40 and 41 does exonerate the user from the obligation to pay for the electrical power consumed improperly, plus a charge for indemnization calculated at a rate equivalent to the monthly charge established for extra charges by the Law of Income of the Federation (Ley de Ingresos de la Federación) for the respective year, for each month or fraction of the debt. The Industrial Department of Commerce and Development in dictating the resolutions referred to in articles 40 and 41, will fix the corresponding amounts calculating or estimating them accordingly; it will determine the payment period, and it will require the debtor to cover it with the corresponding payments (apercibimientos).

CHAPTER VII

ART.-43 (Reformed by the ONLY article of the decree of December 15, 1983, published in the "Diario Oficial" on the 27th of that same month and year, in effect the next day, to remain as follows):

ART.43.- In case of non-conformity to the resolutions of the qualified Department dictated according to this Law and other dispositions derived from it, the interested party may request,

BEST AVAILABLE DOCUMENT

within a 15 working day period following notification, the reconsideration of said resolution before this same Department.

In this recourse all kinds of evidence may be offered, except confessional evidence. The appeal shall be accompanied by documents showing evidence of the law appealed against, and evidence of proof of identification of the appealing party.

A period set by the Department knowing about the recource, of no less than 8 and no more than 30 working days shall be granted to present documents of evidence according to the degree of difficulty which such presentation of documents would entail. It will be the responsibility of the appellant to provide witnesses, certificates and documents. If the appellant fails to provide these within the allotted period of time, the corresponding evidence shall not be taken into account when issuing the respective resolution. In that which is not foreseen in this paragraph, the Federal Code of Civil Proceedings will be applicable supplementarily in relation to the offer, receipt, and presentation of evidence.

The recourses shall be determined by the corresponding officials in agreement with the interior regulation of the respective Agency: or in agreements with delegated authority, except in the case of resolutions imitated by the secretary, in which case, said period of time is guaranteed its value in terms of the Fiscal Code of the Federation. The suspension will continue until the qualified Department decides the recourse. If no guarantee is constituted, the suspension will cease without the need of a declaration and the executory process shall continue.

With respect to the administrative resolutions; the interposition of the recourse will suspend the executory process of the resolution contested upon request from the appellant, and it will have the desired effect until the written communication, or petition of the appellant himself, is definitely solved about said suspension, which will only be granted if the following requirements are met:

I.- The appellant requests it;

II.- The recourse is admitted.

III. The suspension does not carry as consequence the completion or continuation of acts or omissions implying detriment to the social interest or to the public order;

IV.- That harm or injury is not caused to third parties unless payment to them is guaranteed in the case of not obtaining a favorable resolution;

V.- That the carrying out of the resolution causes harm or injury of impossible or difficult repair against the appellant.

BEST AVAILABLE DOCUMENT

CHAPTER VIII

JURISDICTION

ART.44.- (Reformed by the ONLY article of the decree of December 15, 1983, published in the "Diario Oficial" on the 27th of that same month and year, in effect the next day, is to remain as follows):

ART.44.- The application of the present Law and its regulatory dispositions are under the jurisdiction of the Federal Executive by means of the Goverment's Department of Energy, Mines and Industry, the Department of Finance and Public Credit, and the Department of Industrial Commerce and Development, in the terms of this same law.

ART.45.- In all acts, agreements and contracts in which the Federal Power Commission is involved, the leading federal laws will be applicable and the controversies in which it takes part shall fall under the exclusive jurisdiction of the Federation Court (Tribunales de Federación) being excluded from granting the guarantees required for private individuals who are a part of said controversies.

N. del E.- The following Chapter IX entitled "Utilization of Works of Electrical Infrastructure" included in article 46, was created or added by the Twenty First Article of the Law which establishes, reforms, adds and derogates various fiscal dispositions published in the "Diario Oficial" on December 31, 1986, in effect January 1st, 1987, to remain as it now appears:

CHAPTER IX

Utilization of Works of Electrical Infrastructure

ART.46.-The payments which are to be carried out by the Federal Power Commission, the Federal Government (FG) in conformity with the financial rehabilitation agreement, shall have the character of "utilization (aprovechamiento) by which the FG assumed the rights of the respective creditors.

The amount will be determined yearly by the equivalent to the savings of the interests with charge to the results of the organization as a consequence of the aforementioned assumption of debts, and shall be paid in the same installments in which said organization was obligated to cover the debt.

The income obtained by the utilization established in this article, will be geared to compliment the patrimonial cooperations to the organism for investment in new works of electrical infrastructure according to the "Budget Expenditures" authorized by the Department of Budget and Programming (Programación y Presupuesto) and they will be made and will apply according to the

BEST AVAILABLE DOCUMENT

authorized budgets and calendars":

TRANSITORIES:

FIRST ARTICLE .- The present law will be in effect on the day following its publication in the "Diario Oficial" of the Federation.

SECOND ARTICLE.-The Industrial Power law of December 31, 1938 and the Decree establishing the basis for the operation of the Federal Power Commission of January 11, 1949 and the other dispositions opposed to this law are repealed .

Reprinted the 1st time by Reformas in the "Diario Oficial", December 31, 1986. --(Remittance No. 1, 1987).

BEST AVAILABLE DOCUMENT

LAW OF PUBLIC SERVICE

THIRD ARTICLE.- The Federal Power Commission will continue providing electric power services adjusting to the dispositions of the present law.

FOURTH ARTICLE.- Beginning on the date in which this law is put into effect, all the concessions given for supplying public service of electric power from the date in which this law come into effect will no longer be effective.

FIFTH ARTICLE.- In as much as the regulations of this law are dictated, and so long as there is no opposition to its dispositions the regulation of the Law of Electrical Industry of September 11, 1945, as well as the regulatory dispositions dictated in matters of the electrical and service industries, as well as the regulation dispositions dictated in matters of electrical industry, and public service of electric energy will continue to be in effect.

Mexico, D.F. December 8, 1975. Oscar Bravo Santos, D.V.P. - Emilio M. Gónzales Parra, S.P., Fernando Elías Calles, D.S., Salvador Gámiz Fernández, S.S.-(Rúbricas).

In complying with the dispositions of Subparagraph I or article 89 of the Political Constitution of the United States of Mexico, and for its proper publication and observance, I now issue the present Decree in the residence of the Federal Executive Power, in the city of Mexico, Distrito Federal, on the tenth day of December of nineteen hundred and seventy five.- Luis Echeverría Alvarez (Rúbrica).- The Secretary of Industry and Commerce, José Campillos Sainz (Rúbrica).- The Secretary of the National Wealth, Francisco Javier Alejo López. (Rúbrica), The Secretary of Finance and Public Credit, Mario Ramón Beteta.- (Rúbrica).- The Secretary of Hydraulic Resources, Leandro Rovirosa Wade.- The Secretary of the Presidency, Ignacio Ovalle Fernández.- (Rúbrica), The Secretary of the Department of the Interior (Secretario de Gobernación), Mario Moya Palencia.- (Rúbrica)

BEST AVAILABLE DOCUMENT

BEST AVAILABLE DOCUMENT

I. Fifteen percent for commissioners that perform just the operations mentioned in item I of the Tenth Rule, and

II. Five percent for commissioners who, in addition to the operations ...illegible text.... perform those mentioned in item II of the Tenth Rule.

Every year, the National Banking Commission will publish whatever amount is appropriate.

Minimum capital contributions must be totally paid on the corresponding year's last business day, at the latest. The Secretariat for Finance and Public Credit may extend the deadline depending on a corporation's development projects.

In the case of adjustable-capital corporations, the minimum equity will be composed of non-profit-withdrawal shares.

TENTH. Commissioners may only:

I. Receive resources from individuals with the purpose of investing them in credit institutions or investment firms, and

II. Carry out transactions between stock dealer institutions, money exchange firms and credit institutions, and between legal entities and those financial institutions, with the sole purpose of putting them in contact with each other. In order to carry out these transactions, commissioners will have to accredit their technical and administrative experience and capabilities before the Bank of Mexico, in the way determined by the Bank itself. The latter will request the opinion of the Banking and Securities National Commissions.

In carrying out the transactions mentioned in items I and II above, commissionists must comply with the general regulations issued to that effect by the Bank of Mexico.

Likewise, relations between commissioners and credit institutions, stock dealer institutions, investment firms and money exchange firms, as well as with their own customers, will be subject to the applicable laws, these regulations and any other applicable provisions. They will also be subject to the contracts previously approved by the National Banking Commission.

FIFTEENTH. Commissioners may not:

I. Invest the resources of the individuals who hire their services in instruments not offered by the credit institutions or the investment firms;

II. Receive compensation other than that established by the Bank of Mexico;

III. Involve third parties in the fees they receive from stock dealer institutions, money exchange firms, credit institutions or investment firms, and

IV. Pay any commissions, fees or compensation to members of the Board of Directors, Board of Administration, administrators, officials or employees of stock dealer institutions, money exchange firms, credit institutions, investment firms or agents of those investment firms and of the legal entities that they put in contact.

TRANSITIONAL

SINGLE. This Resolution will become effective the day following its publication in the **Official Gazette of the Federation.**

Mexico, Federal District, on the 29th day of May of 1991. Effective Vote. Non Reelection. In the absence of the Secretary, pursuant to article 137 of the Internal Rules and Regulations of the Secretariat for Finance and Public Credit. Signed: the Under Secretary for Finance and Public Credit. Guillermo Ortiz M.

SECRETARIAT FOR POWER, MINING AND SEMI STATE-OWNED INDUSTRY

ENABLING REGULATIONS of the Law of Electric Utilities as Regards the Self-Sufficient Provision of Electric Power

The Document bears a seal with the National Coat of Arms, reading United Mexican States, Presidency of the Republic.

I, **CARLOS SALINAS DE GORTARI**, Constitutional President of the United Mexican States, pursuant to the authority bestowed upon me by item I, article 89 of the Political Constitution of the United Mexican States, and pursuant to the provisions set forth in articles 35, 36, 37, 38, 39 and 40 of the Law of Electric Utilities, and 33 and 34 of the Organic Law of the Federal Public Administration, and

WHEREAS

- The 1989-1994 National Development Plan states that meeting the general demand for electric power is one of the area's national objectives and for that purpose it seeks to promote the investments

BEST AVAILABLE DOCUMENT

required to generate more electricity, so as to ensure that economic and social activities are not hindered by a limited provision thereof;

- The electric system is currently subject to unprecedented strain in order to meet the demand for electric power, since that demand is growing at a greater pace than the infrastructure required to expand the system; for this reason, it is imperative to continue expanding the electric infrastructure within the self-sufficiency schemes made possible by the Law;

- The Law of Electric Utilities states that the self-sufficient provision of electric power to meet private interests, considered on an individual basis, is not considered a public utility;

- The above-mentioned Law enables the Secretariat for Power, Mining and Semi State-Owned Industry to grant, pursuant to the opinion of the Federal Electricity Commission, licenses for the self-sufficient provision of electricity to meet the requirements of individuals or legal entities, considered on an individual basis;

- Some industries base their production on fuel, i.e., secondary sources of power, such as vapor or fuel gases, that make it possible, through certain processes, to produce electricity as a sub product, and in which the efficiency of this joint production is far greater than that of each of those secondary sources of power;

- Under the 1990-1994 National Program to Update the Production of Power, saving and efficiently using power through an integral effort of the entire society is a top priority, and ecological preservation and environmental protection constitute one of the leading priorities.

THEREFORE, I pass the following

ENABLING REGULATIONS OF THE LAW OF ELECTRIC UTILITIES AS REGARDS THE SELF-SUFFICIENT PROVISION THEREOF

ARTICLE 1 - The purpose of these enabling regulations is that of directing the application of the Law of Electric Utilities as regards the self-sufficient provision of electricity.

ARTICLE 2 - The following definitions are hereby adopted for the purposes of these enabling regulations:

I. Law: the Law of Electric Utilities

II. Secretariat: the Secretariat for Power, Mining and Semi State-Owned Industry

III. Commission: the Federal Electricity Commission

IV. Self-Sufficient Provision: the generation of electric power to meet the requirements of individuals and legal entities, considered on an individual basis, including the generation of electric power as a sub product of industrial processes or of the production of other secondary sources of power.

ARTICLE 3 - The application of these Enabling Regulations, the granting of self-sufficient provision licenses, and the inspection and control carried out at every construction site or facility aimed at obtaining the self-sufficient provision of electric power, will fall within the purview of the Secretariat.

ARTICLE 4 - In accordance with the opinion of the Commission, the Secretariat will grant licenses for the self-sufficient provision of electric power to meet the requirements of individuals or legal entities, considered on an individual basis, provided that:

a) Either the Commission cannot or does not find it convenient to provide electric power; or

b) There are technical or economic reasons that keep the Commission from ensuring a normal provision, in the opinion of the Secretariat, pursuant to article 25 of the Law.

The Secretariat will decide on the requests for authorizations mentioned in this article, within 60 business days following the date of their submission. If the Secretariat fails to arrive to a decision within that time period, the requested authorization will be deemed granted.

ARTICLE 5 - Authorization is hereby granted to operate power plants to be used exclusively during contingencies resulting from downtimes in the provision of the public-utility service of electricity.

ARTICLE 6 - The Secretariat, in accordance with the opinion of the Commission, will also grant authorizations for the self-sufficient provision of electric power when the requirements of items a) to d) of article 36 of the Law are met. In that event,

BEST AVAILABLE DOCUMENT

BEST AVAILABLE DOCUMENT

electric power will be used in processes in which the production of sources of power, including electric power, is more efficient than in isolated processes.

The Commission's inability or reluctance to provide electric power will not be a prerequisite for the granting of those authorizations.

ARTICLE 7 - For the purposes of these Enabling Regulations, authorizations for the self-sufficient provision of electric power may be requested and obtained by individuals or legal entities that are joint owners of the self-sufficient provision power plant. In that event, licensees may name a common representative, who will be responsible to the Secretariat.

ARTICLE 8 - In order to meet their own requirements, individuals or legal entities, considered on an individual basis, may establish a corporation for the sole purpose of self-sufficiently generating electric power for its partners.

ARTICLE 9 - In their requests for self-sufficient provision authorizations mentioned in articles 4 and 6 of these Enabling Regulations, applicants must include their programs for the provision of primary sources of power. The assessment of those programs by the Secretariat will be a part of the studies undertaken in order to grant such self-sufficient provision authorizations.

In no way will the issuance of those authorizations make the Secretariat or other agencies of the Federal Public Administration responsible for the provision of primary sources of power to licensees.

Applicants will have to take the steps needed to ensure that their electric power requirements are met on a permanent basis independently from the national electric system. Those who require the provision of electric power as backup for self-sufficient provision facilities, will have to request this service directly from the Commission and agree upon the corresponding terms and conditions. These terms and conditions must be in line with the generic ones approved by the Secretariat.

The issuance of self-sufficient provision authorizations does not entail any commitment to entitle licensees to book capacity on the national electric system.

ARTICLE 10 - Self-sufficient provision authorizations may be granted even if generating capabilities exceed user consumption levels.

ARTICLE 11 - As regards the electric power generated under the authorizations referred to in these Enabling Regulations, any surplus electricity in excess of demand will be covered by the applicable agreements reached by the Commission and applicants, pursuant to item d) of article 36 of the Law. Those agreements will specify what compensation will be paid for the provision of the surplus electricity, as well as the way to fund that compensation; they will also include clauses describing the methods adopted for the provision of that surplus electricity.

The agreement will remain in force for as long as the corresponding authorization is not cancelled or has not expired.

ARTICLE 12 - Every applicant will have to comply with the technical regulations issued by the Secretariat as regards constructions and facilities for the self-sufficient provision of power. Those regulations, established on the basis of the information provided by the Commission, must be published in the Official Gazette of the Federation and will be updated on a permanent basis.

ARTICLE 13 - Self-sufficient provision authorizations may be cancelled for any of the following reasons:

a) For the systematic or consistent violation of the provisions set forth in the authorization itself; or

b) For the systematic or consistent violation of the provisions relating to facilities.

ARTICLE 14 - In the event of the death of the holder of a self-sufficient provision authorization, that authorization will be transferred to his legal assignees. If the holder is a legal entity, its termination will cause the authorization to expire.

ARTICLE 15 - Should an interested party have any objections as regards the

file the administrative appeal set forth in article 43 of the Law.

TRANSITIONAL

FIRST - These Enabling Regulations will become effective the day following their publication in the Official Gazette of the Federation.

BEST AVAILABLE DOCUMENT

BEST AVAILABLE DOCUMENT

SECOND - The Secretariat must publish the technical regulations mentioned in article 12 above, within 60 business days following the effective date of these Enabling Regulations.

Done at the Residence of the Federal Executive Branch, in Mexico City, Federal District, on the 29th day of May 1991. Signed: **Carlos Salinas de Gortari.** Signed: the Secretary of Power, Mining and Semi State-Owned Industries, **Fernando Hiriart Balderrama.** Signed: the Secretary of Commerce and Industrial Development, **Jaime Serra Puche.**

SECRETARIAT FOR COMMERCE AND INDUSTRIAL DEVELOPMENT

AGREEMENT establishing normal competitive prices for the sections of the import duty schedule of the Tariff adopted under the General Import Tax Law, as regards Sugar, to be applied during June 1991.

The Document bears a seal with the National Coat of Arms, reading United Mexican States, Secretariat for Commerce and Industrial Development.

The Secretariat for Commerce and Industrial Development, pursuant to article 34 of the Organic Law of the Federal Public Administration, and to article 4 of the Decree reforming the Tariff of the General Import Tax Law, published in the **Official Gazette of the Federation** on 31 January 1991, and in accordance with the opinion of the Secretariat for Finance and Public Credit, hereby passes the following

AGREEMENT ESTABLISHING NORMAL COMPETITIVE PRICES FOR THE SECTIONS OF THE IMPORT DUTY SCHEDULE OF THE TARIFF ADOPTED UNDER THE GENERAL IMPORT TAX LAW, AS REGARDS SUGAR, TO BE APPLIED DURING JUNE 1991.

SINGLE ARTICLE - Normal competitive prices to be applied during June 1991, in U.S. dollars per kilogram, will be as follows:

SECTION OF THE IMPORT DUTY SCHEDULE	NORMAL COMPETITIVE PRICE
1701.11.01	0.251
1701.11.99	0.172
1701.12.01	0.251
1701.12.99	0.172
1701.91.01	0.282
1701.99.01	0.251
1701.99.99	0.282
1702.90.01	0.237

TRANSITIONAL

SINGLE - This agreement will become effective on June 1, 1991.

Mexico, D.F., on the 29th day of May 1991. Pursuant to article 31 of the Internal Rules and Regulations of the Secretariat for Commerce and Industrial Development, signed by **Fernando Sánchez Ugarte**, Under Secretary for Industry and Foreign Investment, in the absence of the Secretary of the Sector and of the Under Secretary for Foreign Commerce.

SECRETARIAT FOR AGRICULTURE AND WATER RESOURCES

DECREE declaring that planting, harvesting and industrializing sugar cane is in the public interest and, consequently, those activities will be covered by the provisions set forth in this Decree.

The Document bears a seal with the National Coat of Arms, reading United Mexican States, Presidency of the Republic.

BEST AVAILABLE DOCUMENT

SELF GENERATION / JOINT OWNERSHIP OPINIONS

- OBJECTIVE: To be free to work and to produce on an efficient basis and in a competitive environment for the benefit of electric power users.

- In the past, given the restrictions stemming from article 36 of the Law, and the attitude of the authorities on duty, its growth and modernization were obstructed. (negatives attached).

  - Currently, there is a different attitude as regards the issuance of authorizations required to grow and meet self-provision requirements. There are still, however, some difficulties:

    - Authorizations are only granted provided that the applicant has his own networks

    - The way to deal with surpluses is still largely undefined

  - However, in spite of the regulations dated May 8, whereby it is stated that authorizations will not depend on whether the Federal Electricity Commission (C.F.E.) has capacity or not, this restriction still exists under the Law.

- To be free to grow or to expand in order to serve its users, regardless from whether C.F.E. has capacity or not. To delete that restriction from the Law.

  - The objective is to make the user free so that, based on an economic decision, he may decide to do it by himself, in association with other(s), or by purchasing from the C.F.E.

- Freedom to own or expand his own distribution network to serve his customers.

  - In the event of physical or transit impediments, to have access to the C.F.E. network to meet the requirements of his customers.
  - To define the cost of transmission in a competitive environment.
  - To have the option to enter into "swaps", should this prove beneficial to the system.

- To enable individuals or legal entities to set up private power plants, on an individual basis or under the joint

ownership regime.

- In the event of surpluses, to have already defined and planned the way to deal with them.
  - To apply this to contingencies as well.
  - To purchase surpluses from self-sufficient provision power plants on a preferential basis by CENACE (they would have power available without C.F.E. investment).

BEST AVAILABLE DOCUMENT

- To become very familiar with the structure of the prices for the purchase of surplus electric power from private self-sufficient power plants.

- Uncertainty as regards the availability and competitiveness of fuel.

  - In the past, a corporation was forced to use the kind of fuel that the semi state-owned entity was interested in selling (i.e., there were limitations as regards the utilization of gas, see attached table).

  - Currently, in some zones there is freedom to consume one or the other, whereas in other zones the utilization of gas is subject to restrictions, and this puts some limitations to the idea if investing in more efficient cycles.

- It is important to guarantee the long-term provision of fuel

BEST AVAILABLE DOCUMENT

decided by the self-sufficient producer in a competitive environment.

- As to the environment, there is also uncertainty with regard to ecological regulations.
  - A certain type of facilities was required in the past.
  - Currently, other types of facilities are required, with the result that sums invested in the past cannot be applied to meet new regulations.
  - With some of the types of fuel provided (combustoil) it will hardly be possible to meet the regulations that are planned to be implemented.
- Under the Law, there is a person responsible for the provision of sources of power. However, so far there is no commitment to ensure provision for new projects. (As results from the May 1991 enabling provisions).
  - Recent de-regulation

BEST AVAILABLE DOCUMENT

PERUSAHAAN UMUM LISTRIK NEGARA
(PLN)

STATE ELECTRICITY CORPORATION
INDONESIA

ISSUES RELATING TO PRIVATE INVESTMENT IN THE POWER SECTOR INDONESIAN UTILITY EXPERIENCE

A paper for the USAID sponsored Seminar on Private Power in Bangladesh
Dhaka 8-12 May, 1994.

Prepared by :
R.M. SAYID BUDIHARDJO
Assistant to the President Director
and
ONTOWIRJO SOEWARNO
Principal Engineer on Electric Power System Design

BEST AVAILABLE DOCUMENT

Table of Content

Page

ABSTRACT 1

1. A BRIEF DESCRIPTION OF PLN POWER SYSTEM 1
Existing Power System 1
Demand Forecast 2
System Development Plan 2

2. INVESTMENT IN THE POWER SECTOR 6
Captive Power Plants 6
Interconnected Power Plants 6

3. HIGHLIGHTS OF TECHNICAL ISSUES 6
Plant Design Requirements 6
Operating Parameters 7
Environmental Issues 7
Design Fuel 7
Project Schedule 7
Testing and Inspection, Start-up Testing, Commissioning and Taking Over 8
Electricity Measurement and Testing Procedures 8
Operation and Maintenance Practices 9
Communications 9
Load Dispatching Instructions 9
Electrical Output Adjustments 9
Reactive Power Capability 9
Scheduled Outages 10
Participation of Indonesian Contractors and Local Content 10

4. HIGHLIGHTS OF COMMERCIAL ISSUES 10
Electricity Price 10
Payment Formula: 10
Adjustments to Charge Rates 11
Sale and Purchase. 11
Compensation for Currency Fluctuations 12
Termination Value 12
Termination due to PLN's non remediable events prior to Commercial Operation Date. 12
Termination due to PLN's non remediable events after Commercial Operation Date: 12
Purchase Price of the Project: 12
GOI support for PLN obligations 13
Currency convertability and availability 13
PLN/GOI funding mechanism for PLN/GOI caused costs and delays. 13

BEST AVAILABLE DOCUMENT

Table of Content

		Page
	Tariff Adjustment for coal supply and other force majeure	13
	Environmental standards in the event of coal supply force majeure.	13
	Indemnification	13
	Billing.	14
	Seller Electricity Requirements.	14
	Late Payments.	14
5.	STATUS OF PRIVATE POWER PROJECTS	15
	Solicited Projects:	15
	Unsolicited Projects:	15
6.	CONCLUSION	15

BEST AVAILABLE DOCUMENT

ISSUES RELATING TO PRIVATE INVESTMENT IN THE POWER SECTOR INDONESIAN UTILITY EXPERIENCE

ABSTRACT

The electric utility power system in Indonesia has been growing at the rate of doubling in every 5 years and is anticipated to grow at the same rate at least for the next 10 years.
The resulting heavy investment requirement in capital and human resources has led to the decision of the Government to invite private participation in the power sector development.

This paper describes briefly the current status of the Indonesian power system and the growing part assumed by the private sector.
Issues relating to technical and commercial problems arising from the introduction of the Independent Power Producers in the system shall be discussed, especially those leading to the recent signing of the agreement for the construction of the first 2 x 600 MW coal fired Independent Power Plant at Paiton, East Java.

1. A BRIEF DESCRIPTION OF PLN POWER SYSTEM

Existing Power System.

The development of the electric power system of the PLN: Perusahaan Umum Listrik Negara, the State Electricity Corporation of Indonesia, from 1973/1974 till 1992/1993 is as shown in Appendices 1, 2 and 3.
The installed capacity by the end of the first Five Year Development Plan (FYDP) was 776 MW reaching 12,562 MW by the end of the fifth FYDP.
The energy production during the last year of the first FYDP was 3.0 TWh reaching 50.1 TWh during the last year of the fifth FYDP.
The energy sold during the last year of the first FYDP was 2.0 TWh reaching 41.7 TWh during the last year of the fifth FYDP.

BEST AVAILABLE DOCUMENT

Demand Forecast

The development the national electricity from the year 1994/95 up to 2003/04 was based on the 6.2% economic growth rate per year, while the industry growth rate is expected to be 11% per year during the year 1994/95 up to 1998/99 and 10 % per year during the year 1998/1999 up to 2003/04. Meanwhile the electrification ratio will reach 60% in 1998/99 and 74 % in 2003/04.

The National Demand Forecast of electricity (in TWh) for the next 10 years is projected as follows :

Year	93/94	94/95	95/96	96/97	97/98	98/99	99/00	00/01	01/02	02/03
Java-Bali	43.8	49.4	55.6	62.6	70.5	78.4	86.3	94.8	103.5	112.7
Outside Java	19.5	22.0	25.0	28.7	32.8	36.9	41.6	46.7	52.3	58.5
Indonesia	63.3	78.4	80.6	91.3	103.3	115.3	127.9	141.5	155.8	171.2

whereas forecast of the captive power development is projected as follows (in TWh):

Year	93/94	94/95	95/96	96/97	97/98	98/99	99/00	00/01	01/02	02/03
Java-Bali	10.0	8.1	3.7	5.2	6.9	8.5	9.7	11.4	13.2	15.1
Outside Java	11.6	12.3	13.3	15.0	16.8	18.5	20.9	23.5	26.4	29.6
Indonesia	21.6	20.4	17.0	20.2	23.7	27.0	30.6	34.9	39.6	44.7

System Development Plan

To meet the national demand forecast as projected above, the **PLN System Development Plan** follows the following scenario (in TWH):

Year	93/94	94/95	95/96	96/97	97/98	98/99	99/00	00/01	01/02	02/03
Java-Bali	33.8	41.3	51.9	57.4	63.6	69.9	76.6	83.4	90.3	97.6
Outside Java	7.9	9.7	11.7	13.7	16.0	18.4	20.7	23.2	25.9	28.9
Indonesia	41.7	51.0	63.3	71.1	79.6	88.3	97.3	106.6	116.6	126.5

BEST AVAILABLE DOCUMENT

The estimated Transmission and Distribution Losses will be (in %):

Year	93/94	94/95	95/96	96/97	97/98	98/99	99/00	00/01	01/02	02/03
Java-Bali	12.1	12.1	12.1	12.1	12.1	12.1	12.1	12.1	12.1	12.1
Outside Java	15.6	15.2	15.1	14.7	14.3	14.0	13.8	13.8	13.8	13.8
Indonesia	12.8	12.7	12.6	12.6	12.5	12.5	12.5	12.5	12.5	12.5

With the estimated transmission and distribution losses and considering PLN's own/station use 4.2% for Java-Bali system and [illegible] for Outside Java system, the gross electricity supply (in TWh) are projected as follows :

Year	93/94	94/95	95/96	96/97	97/98	98/99	99/00	00/01	01/02	02/03
Java-Bali	40.3	49.2	61.9	68.5	75.8	83.4	91.4	99.6	107.8	116.4
Outside Java	9.8	12.0	14.4	16.8	19.5	22.4	25.1	28.2	31.4	35.1
Indonesia	50.1	61.2	76.3	85.3	95.3	105.8	116.5	127.8	139.2	151.5

The corresponding peak load of the Java-Bali System will become (in MW) :

Year	93/94	94/95	95/96	96/97	97/98	98/99	99/00	00/01	01/02	02/03
Java-Bali	6,512	7,911	9,840	10,922	12,119	13,373	14,693	16,058	17,042	18,832

Since source of funding become more and more difficult in the next 10 years, PLN generation can only fulfill the following scheme (in TWh) :

Year	93/94	94/95	95/96	96/97	97/98	98/99	99/00	00/01	01/02	[illegible]
Java-Bali	40.3	49.2	61.9	[illegible]	70.2	67.1	71.5	72.5	[illegible]	75.1
Outside Java	9.8	12.0	[illegible]						27.5	31.1
Indonesia	50.1	61.2	[illegible]	85.0	[illegible]	[illegible]	[illegible]	[illegible]	104.1	106.2

The balance will be provided by Independent Power Producer (IPP) so that the estimated bulk power purchased by PLN from the IPP will be (in TWh) :

Year	93/94	94/95	95/96	96/97	97/98	98/99	99/00	00/01	01/02	02/03
Java-Bali	0	0	0	0	5.6	16.3	19.9	27.1	34.2	41.3
Outside Java	0	0	0.3	0.3	0.3	1.4	2.3	3.2	4.0	4.0
Indonesia	0	0	0.3	0.3	5.9	17.7	22.2	30.3	38.2	45.3

BEST AVAILABLE DOCUMENT

The corresponding projected installed capacity of the Independent Power Producer (IPP) in MW :

Year	93/94	94/95	95/96	96/97	97/98	98/99	99/00	00/01	01/02	02/03
Java-Bali	0	0	0	0	1,000	2,735	3,335	4,535	5,735	6,935
Outside Java	0	0	50	50	50	215	350	485	595	595
Indonesia	0	0	50	50	1,050	2,950	3,685	5,020	6,330	7,530

In order to meet the afore mentioned scenarios, the following tables will show the PLN additional construction of power plants, transmission and substation, as well as distribution.

Additional Construction of PLN Power Plants in MW :

Year	93/94	94/95	95/96	96/97	97/98	98/99	99/00	00/01	01/02	02/03
Java-Bali										
Hydro	0	0	13	0	533	26	0	0	1,360	0
Geothermal	0	165	0	110	165	0	55	0	0	0
Coal Fired	400	400	0	1,200	600	0	0	800	0	0
Combined Cycle	1,436	776	1,270	140	280	0	0	0	0	0
Gas Turbine	60	84	0	600	0	0	400	0	0	0
Sub Total	1,896	1,425	1,283	2,050	1,578	26	455	800	1,360	0
Outside Java										
Hydro	1	10	10	12	142	202	223	483	482	445
Geothermal	0	0	03	20	2	0	18	0	0	0
Coal Fired	0	65	0	165	165	65	330	65	0	0
Combined Cycle	120	0	400	66	132	280	0	0	66	0
Gas Turbine	70	70	260	295	340	100	140	60	55	155
Diesel	119	79	66	175	74	73	0	0	0	0
Sub Total	310	224	739	733	855	720	711	608	603	600
Total	2,206	1,649	2,022	2,783	2,433	746	1,166	1,408	1,963	600

BEST AVAILABLE DOCUMENT

Additional Construction of PLN Transmission Lines and Substation :

Year	93/94	94/95	95/96	96/97	97/98	98/99	99/00	00/01	01/02	02/03
Java-Bali										
Transmission (kmc)	764	1,538	2,024	452	233	652	22	618	1,630	1,560
Substation (MVA)	5,210	8,310	6,560	5,797	3,190	2,640	970	2,860	6,020	4,640
Outside Java										
Transmission (kmc)	685	359	393	1,559	1,560	1,888	1,741	1,451	1,782	3,342
Substation (MVA)	850	260	1,180	1,250	960	830	1,000	2,040	1,520	2,860
Indonesia										
Transmission (kmc)	1,449	1,897	2,417	2,011	1,793	2,540	1,763	2,069	3,412	4,902
Substation (MVA)	6,060	8,570	7,740	7,047	4,150	3,470	1,970	4,900	7,540	7,500

Additional Construction of PLN Distribution Facilities :

YEAR	93/94	94/95	95/96	96/97	97/98	98/99	99/00	00/01	01/02	02/03
Java-Bali										
MV Networks (10^3kms)	10.7	16.5	23.1	11.9	13.3	13.8	14.3	14.5	14.2	14.9
LV Networks (10^3kms)	18.0	27.0	35.8	18.8	21.2	22.3	23.8	24.8	24.9	26.7
Transformers (MVA)	2,134	3,195	4,239	2,228	2,509	2,638	2,827	2,944	2,957	3,170
Outside Java										
MV Networks (10^3kms)	8.1	9.9	9.9	10.4	11.9	12.7	12.0	13.2	13.9	15.2
LV Networks (10^3kms)	10.9	13.7	13.4	13.5	15.2	16.0	14.9	6.3	17.0	18.4
Transformers (MVA)	1,043	1,403	1,276	1,315	1,471	1,543	1,407	1,531	1,595	1,721
Indonesia										
MV Networks (10^3kms)	18.8	26.4	33	22.3	25.2	26.5	26.3	27.7	28.1	30.1
LV Networks (10^3kms)	28.9	40.7	49.2	32.3	36.4	38.3	38.7	31.1	41.9	45.1
Transformers (MVA)	3,177	4,598	5,515	3,543	3,980	4,181	4,234	4,475	4,552	4,891

BEST AVAILABLE DOCUMENT

2. INVESTMENT IN THE POWER SECTOR

Basically there are 2 (two) major categories of participation of the private sector in the electric power development, i.e :

Captive Power Plants

Captive power plants supply electricity for the owners' own use, there is no interconnection with PLN system. Basically PLN has no control on such plants. Captive Plants are mostly owned by industries and the current total installed capacity is approximately equal to the PLN's. Since most of the captive power plants in the next 10 years will be substituted by PLN Grid System, the remaining total installed capacity of the captive power plants will approximately % to the PLN's.

35%

Interconnected Power Plants

The performance characteristics of interconnected power plants shall be consistent with the system performance requirements, depending on the role of plant in the system.

The structure of the power sector investment including private will be as follows :

Year	93/94	94/95	95/96	96/97	97/98	98/99	99/00	00/01	01/02	02/03
Source of Financing										
Internal Funding	700	1,700	1,950	2,250	2,800	2,550	2,650	2,600	2,600	2,600
GOI Equity	850	3,400	650	650	650	650	650	650	650	650
Loan	1,950	1,200	3,250	2,350	1,800	1,400	2,050	3,400	3,400	3,400
Private	0	0	0	250	500	750	750	750	750	750
Total	3,500	6,300	5,850	5,500	5,525	5,350	6,100	7,400	7,400	7,400

3. HIGHLIGHTS OF TECHNICAL ISSUES

Plant Design Requirements

The IPP shall guarantee the design and specifications of all main components of the Plant, in the case of coal fired Steam Power Plant including such components as:

Boiler and auxiliaries
Turbine generator and auxiliaries
Main Transformers
HV or EHV Switchgear

...ST AVAILABLE DOCUMENT

Electrical and mechanical works
Chimneys
Ash handling and disposal system
Flue Gas Desulphurization Plant (FGD)
Fuel oil unloading and storage facilities
Waste water treatment
Water supply.

Operating Parameters

The IPP shall also guarantee the following performance criteria:

Design Capacity
Frequency Limits
System Voltage
Reactive Power Capability
System Fault Level
Maximum Fault Clearing Time for 500 kV System
Unit Starts and Ramp Rates
The technical specifications of the Plant shall conform to the latest edition of internationally acceptable Standards and Codes of the Engineering Societies.

Environmental Issues

The power plant shall be designed to meet the requirements of the GOI Environmental Regulations.
The GOI Regulations No. 29/1986 and No. 51/1993 specify that every project, including power project, is required to have an Environmental Impact Analysis prepared and approved by the authorities, before the project can be executed .
Those projects which prove to have significant pollutive environmental impacts shall be required to have the following plans:

o Environmental Management Plan
o Environmental Monitoring Plan

Design Fuel

The design fuel/coal characteristics shall be within the range as decided and approved in the environmental simulation model study, especially those having direct influence on the emission and ambient concentration levels, e.g. the sulphur content.

Project Schedule

The project schedule shall be presented by the Developer for the evaluation and approval of the GOI, indicating the following commitments:

BEST AVAILABLE DOCUMENT

Financing Date
Start of Site Mobilization
Commencement of works
Mechanical Completion Dates for :

- Turbine foundation and pedestal
- Boiler steel and drum lifting
- Inlet and discharge canals
- Chimneys
- Coal Jetty and coal handling system
- Waste water treatment plant
- Transformer system and Overhead Transmission Lines
- Turbine building and control room
- Backfeed power for testing
- Boiler pressure test
- Turbine generator installation

Turbine roll
Initial firing
Initial synchronization to the grid
Commissioning date for 1st and subsequent units
Plant commercial operation date

Testing and Inspection, Start-up Testing, Commissioning and Taking Over

The test procedures for the construction, start-up and commissioning of the project, once agreed upon by both parties, are the responsibility of the IPP. The IPP shall be responsible for providing all supplies required for carrying out such tests.

Electricity Measurement and Testing Procedures

Subject to PLN approval Developer shall engineer, design, procure, install and test digital-type Metering System in each Unit. Such system shall be capable of measuring bi-directional transfer of real and reactive power at agreed transfer levels between PLN and Developer. The Developer shall transfer ownership of the Metering System to PLN after acceptance of its final calibration as mutually agreed by the Parties.
Operation and maintenance of the Metering System shall subsequently be the responsibility of PLN.
The billing and metering C.T.'s, P.T.'s and metering devices shall provide minimum combined system accuracy of ± 0.5 % when measured at full power level.
The inspection and test procedures of the metering system shall be agreed upon by both parties.

BEST AVAILABLE DOCUMENT

Operation and Maintenance Practices

Operation Procedures
The objective of the operation procedures is to prescribe the coordination of delivery of electricity from the Plant to the PLN Grid System in a safe manner, consistent with the Load Dispatching Center Instructions and with acceptable utility practices.

Joint Operation Committee
Joint Operation Committee is to be established by IPP and PLN with the following duties:

- Oversight of all electricity meters relating to the interconnection between the Plant and the PLN Grid System.
- Coordination of maintenance schedule
- Coordination of protection relaying
- Coordination of short range and long range forecast of load and capabilities
- Oversight of matters relating to the coordination of planning and development of plant sites shared by both parties
- Consideration of other plant operational matters as may be referred to by mutual agreement of both parties

Communications

The Parties shall maintain communications in accordance with Good Utility Practice and, as necessary, shall inform the other Party as to the operating conditions and requirements of their respective facilities that may affect the other Party's operating requirements.

Load Dispatching Instructions

As far as the operation of the Plant is concerned, the Developer shall comply with all real time Load Dispatching Instructions provided by PLN's Load Dispatching Center.

Electrical Output Adjustments

The Plant shall be continuously operated and utilized as a baseload facility and is expected to be operated as such except during Scheduled and Maintenance Outages.
Developer shall maintain the electrical output of the Plant, to the extent reasonably possible, at the prescribed load as instructed by PLN Load Dispatching Center.

Reactive Power Capability

Developer shall regulate the flow of reactive power in order to comply to PLN Load Dispatching Center instructions within the following range:
Maximum reactive power generated by each generator will be limited between eighty-five (85) percent lagging and ninety-five (95) percent leading power factor measured at the generator's terminals.

BEST AVAILABLE DOCUMENT

Scheduled Outages

The Developer shall make every reasonable effort to schedule all scheduled outages in accordance with PLN Load Dispatching Center requirements.

Participation of Indonesian Contractors and Local Content

The Developer's Contractor shall work with Indonesian Contractor(s) and employ local labour whenever possible to the maximum extent as required by the G.O.I. rules and regulations. The Developer is requested to follow the directives of the GOI as set forth in the circular of the Coordinating Minister of Economy,Finance, Industry and Development Control (MENKO EKUIN WASBANG) No. SE-11/M.EKVIN/1989 dated June 22, 1989, aimed at maximizing the use of domestic products, services and materials, implying preference for local supply of items of materials, and equipments or components and services of the Works.

4. HIGHLIGHTS OF COMMERCIAL ISSUES

Electricity Price

The agreed electricity tariff will be denominated in United States Dollar but paid in Rupiah currency structured in three declining steps i.e:

- price per Kwh for the first six years
- price per Kwh for the next 6 years and
- price per kWh for the remaining 18 years.

The agreed tariff includes all current taxes,levies and duties.

The rupiah payment of the net electricity product will be monthly payment calculated based on the prevailing US Dollar exchange rates.

The above mentioned electricity unit price consists of two parts :

- Capacity Payment or fix component

  This part of the electricity unit price shall represent payment for Net Dependable Capacity, shall consist of capacity and fixed operation & maintenance components.

- Energy Payment or variable component

  This part of the electricity unit price shall represent payment for Net Electrical Output and shall consist of fuel and variable operation & maintenance components.

Payment Formula:

Capacity Component A :

$$A_m = DC * (PH_m/PH_y) * CCR * AF_t$$

BEST AVAILABLE DOCUMENT

Capacity Component B :

$$B_m = DC * (PH_m/PH_a) * FOMR_m * AF_a$$

Fuel Payment Component C :

$$C_m = E_a * SHR_w * (1/HHV) * P_m$$

Variable O&M cost component D :

$$D_m = E_a * (VOMR_{fm} + VOMR_{lm})$$

where :

CCR = capacity component rate is expressed in US$ per kW-year
FOMR = fix O&M rate expressed in US$ per kW-year
VOMR = variable O&M rate expressed in US Cents per kWh
HHV = high heating value of coal expressed in kcal/kg
SHR = Plant Specific Heat Rate expressed in kcal per kWh
P_{1997} = Price of Coal of 1997 in US$ per metric ton

The Payment Formulas will use projected availability factors which vary from Contract Year to Contract Year.

Adjustments to Charge Rates

The fixed and variable operation and maintenance components are subject to yearly adjustment following US Consumer Price Index for the foreign portion and Indonesian Consumer Price Index for the local portion.

Sale and Purchase.

From and after the Commission Date of the first operating Unit until the commercial Operation date, seller shall make available to PLN, and PLN shall purchase from Seller for the consideration the net dependable capacity and net electrical output of such unit.
From and after the Commercial Operation Date until the termination of the Agreement, Seller shall make available to PLN, and PLN shall purchase from Seller for the consideration the Net Dependable Capacity and Net Electrical Output of the Plant.

BEST AVAILABLE DOCUMENT

In the event Seller shall be unable to conduct the Net Dependable Capacity Test for a Unit or Units on the date selected because of any action or failure to act without justifiable cause by PLN or any Governmental Instrumentality of the Republic of Indonesia or an Event of Force Majeure affecting the PLN Grid System then the Unit concerned shall be deemed to be commissioned and deemed to be providing Net Dependable Capacity equivalent to the agreed power with availability Factor deemed to be 83% and PLN shall compensate Seller for the consideration.

Compensation for Currency Fluctuations

In order for the Seller to accept payment by PLN in Rupiah currency, while seller's indebtness will be denominated primary in, and the sponsors' return must be paid in, dollars , the price will be adjusted to compensate for fluctuations in the rupiah's exchange rate.

Termination Value

The parties agree on the basis on which to determine the price to be paid by PLN for the plant in the event that the PPA is terminated by either PLN or the seller.

Termination due to PLN's non remediable events prior to Commercial Operation Date.

If Seller terminates the agreement due to PLN's non remediable event, PLN shall purchase all of Seller's right, title, and interest for a price equal to :

- the amount required to repay the principal amount of the Senior Debt outstanding,
- interest due and payable pursuant to the applicable Financing Agreement, plus
- the lesser of Sponsors' equity commitment or Sponsors' Actual Equity Contribution.
- an amount equal to 23.5% per annum of the sum of sponsor equity commitment plus sponsors' contingent equity commitment,compounded annually from financing Date until COD.

Termination due to PLN's non remediable events after Commercial Operation Date:

$$\sum_{x=0}^{n-1} \left\{ \frac{DC * AF_{py} * CCR_y * F_y}{(1+r)^x} \right\} * 1/RD_b$$

BEST AVAILABLE DOCUMENT

Purchase Price of the Project:

If PLN terminates the agreement due to Seller's non remediable event, PLN shall purchase all of Seller's right, title, and interest for a price equal to :

- the amount required to repay the principal amount of the Senior Debt outstanding, plus
- interest due and payable pursuant to the applicable Financing Agreement, minus
- the sum of Sponsors' equity commitment plus Sponsors' Contingent Equity Commitment, minus Sponsors' Actual Equity Contribution.

GOI support for PLN obligations

The parties agree on the form and substance of the support to be provided by the GOI for PLN's obligations under the PPA.

Currency convertability and availability.

In order Seller to accept payment in rupiah by PLN, the parties agree on the legal rights that the seller would have in the event that is unable for any reason to convert such rupiah into US dollars.

PLN/GOI funding mechanism for PLN/GOI caused costs and delays.

A mechanism must be established to provide funding in a timely manner for costs resulting from acts and omissions of GOI and PLN, including such acts or omissions that result in significant delays in the construction of the project.

Tariff Adjustment for coal supply and other force majeure.

The parties agree the risk allocation of events of force majeure, particularly as it relates to the supply of coal to the project. A price adjustment to compensate the Seller for extra costs resulting from (a) an event of force majeure that results in the seller's inability to obtain coal from its contracted sources(due to the events other than gross negligence or willful breach by the sources) and (b) any other events of force majeure to the extent such costs are not fully covered by insurance.

Environmental standards in the event of coal supply force majeure.

The design of the plant with respect to environmental controls agreed to by the parties and reflected in the seller's estimated capital costs, the seller's ability to meet the environmental standards applicable to the project is dependent on its ability to obtain coal having specific sulfur and ash characteristics. The parties agree to determine how to allow the plant to continue to produce electricity in the event this required coal becomes unavailable.

BEST AVAILABLE DOCUMENT

Indemnification

Indemnity by Seller.
Seller will bear the responsibility for any claim against PLN in respect of loss of or damage to property, death or injury to person and all expenses relating thereto due to an event occurring before the termination of the PPA and arising out of the design or construction of the Project or the ownership, operation or maintenance of the Plant and resulting from any act or omission of Seller or its Contractors, without recourse to PLN. Seller will hold PLN and its employees, directors, agents and shareholders fully indemnified in respect thereof. The indemnity shall not extend to and PLN hereby waives any claims against Seller for and indemnifies Seller against (a) any such loss, damage, death or injury suffered by PLN or its employees, directors, agents or shareholders or (b) any such claim to the extent that it was caused by any act or omission of PLN or the failure of PLN to take reasonable steps in mitigation thereof.

Indemnity by PLN.
PLN will bear responsibility for any claim against Seller or its Contractors in respect of loss of or damage to property, death or injury to person and all expenses relating thereto due to an event occurring before the termination of the PPA and arising out of the design, construction, ownership, operation or maintenance of PLN-owned or operated facilities at the Paiton Power Generating Complex, PLN will hold Seller and its Contractors fully indemnified in respect thereof. The indemnity shall not extend to and Seller hereby waives any claim against PLN for and indemnifies PLN against (a) any such loss, damage, death or injury suffered by Seller or its Contractors or their respective employees, directors, agents or shareholders or (b) any such claim to the extent that it was caused by any act or omission of Seller or its Contractors or the failure of Seller or its Contractors to take reasonable steps in mitigation thereof.

Billing.
Seller shall render to PLN an itemized Invoice for each Billing Period. Invoices shall be due and payable by PLN. In the event PLN disputes any portion of an Invoice, PLN may refer it to an expert. No previously undisputed Invoice or payment may be disputed more than thirty-six (36) months after the Payment Date of such Invoice.
PLN shall pay undisputed a mounts and, pending resolution by the expert, PLN shall continue to make payment of the amounts in dispute.

Seller Electricity Requirements.

For the power to be purchased by Seller from PLN for its own use before and during construction through a construction transformer, Seller shall pay PLN for such electrical energy at the applicable PLN tariff.

BEST AVAILABLE DOCUMENT

Late Payments.

Late payments by either Party shall bear interest at the Late Payment Interest Rate from the date on which such payment was originally due until the date that such payment was made.

5. STATUS OF PRIVATE POWER PROJECTS

The following table indicates the private power projects expected to be commissioned within the Sixth Five Year Development Plan of Indonesia.

Project Name	Developer	Capacity (MW)	Expected operation
Solicited Projects:			
Paiton Phase I	Consortium	2 x 605	1998/1999
West Jawa	Tender	400	1998/1999
West Kalimantan	Tender	4 x 25	1998/1999
Wayang Windu	Tender	40	1998/1999
Patuha	Tender	40	1998/1999
Unsolicited Projects:			
Tanjung Jati	Hopewell	2 x 660	1997/1998
Amurang	Energy Y. Electricidad	2 x 25	1997/1998
Tarahan	Cohasset Resources	2 x 100	1998/1999
Serpong	British Gas	500	1996/1997
Pasuruhan	Enron	500	1996/1997
Samarinda	Enron	2 x 65	1998/1999
Sengkang	Trihasra	135	1998/1999
Dieng	Purna Wira	55	1998/1999
Ulubelu	Enerindo	6 x 20	1998/1999
Lumut Balai	Enerindo	6 x 20	1998/1999
Rajabasa	Enerindo	6 x 20	1998/1999

The total loan required for the above mentioned projects (excluding equity) will be in the order of 6 (six) billions U.S.Dollars.

BEST AVAILABLE DOCUMENT

6. CONCLUSION

a. To safeguard the operational standard of the utility grid, interconnected power plants by IPP shall have to meet the following minimum performance requirements:

- Acceptable reliability
- Compatible voltage and frequency regulation characteristics
- In full conformance with the Indonesian regulations, including those on equipments, plant performance and environmental quality standards.
- To follow the standard operating procedures in coordination with the Utility's Load Dispatching Authority.

b. The electricity tariff will be preferably denominated in United States Dollar but paid in Local currency structured in three declining steps i.e:
- price per Kwh for the first six years
- price per Kwh for the next 6 years and
- price per kWh for the remaining 18 years.

The tariff shall includes all current taxes,levies and duties.

The tariff of each steps as shown above consists of two parts :
- Capacity Payment or fix component
- Energy Payment or variable component which is subject to yearly adjustment following United States Consumer Price Index for the foreign portion and Indonesian Consumer Price Index for the local portion.

AILABLE DOCUMENT

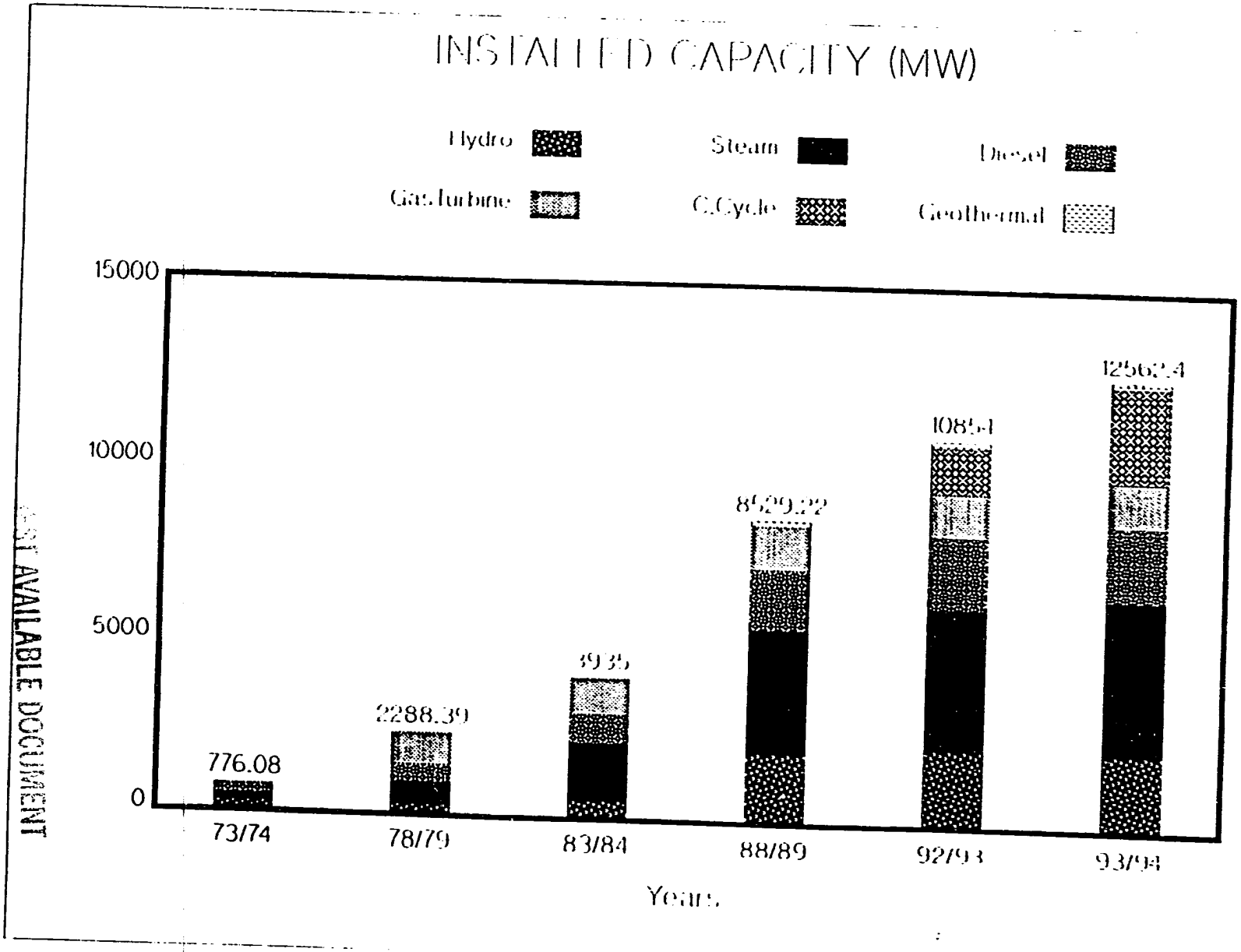

BEST AVAILABLE DOCUMENT

Appendix 2

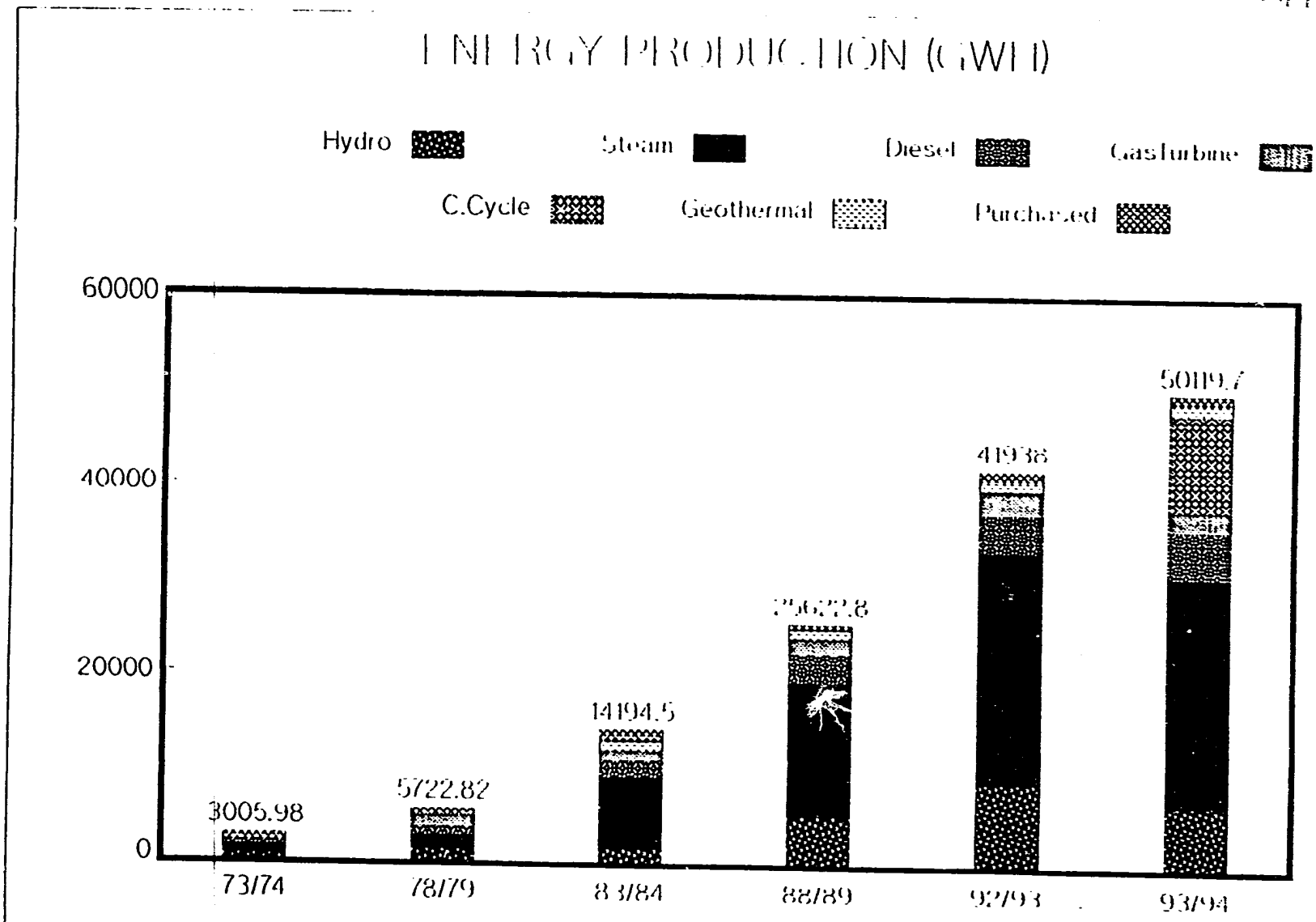

BEST AVAILABLE DOCUMENT

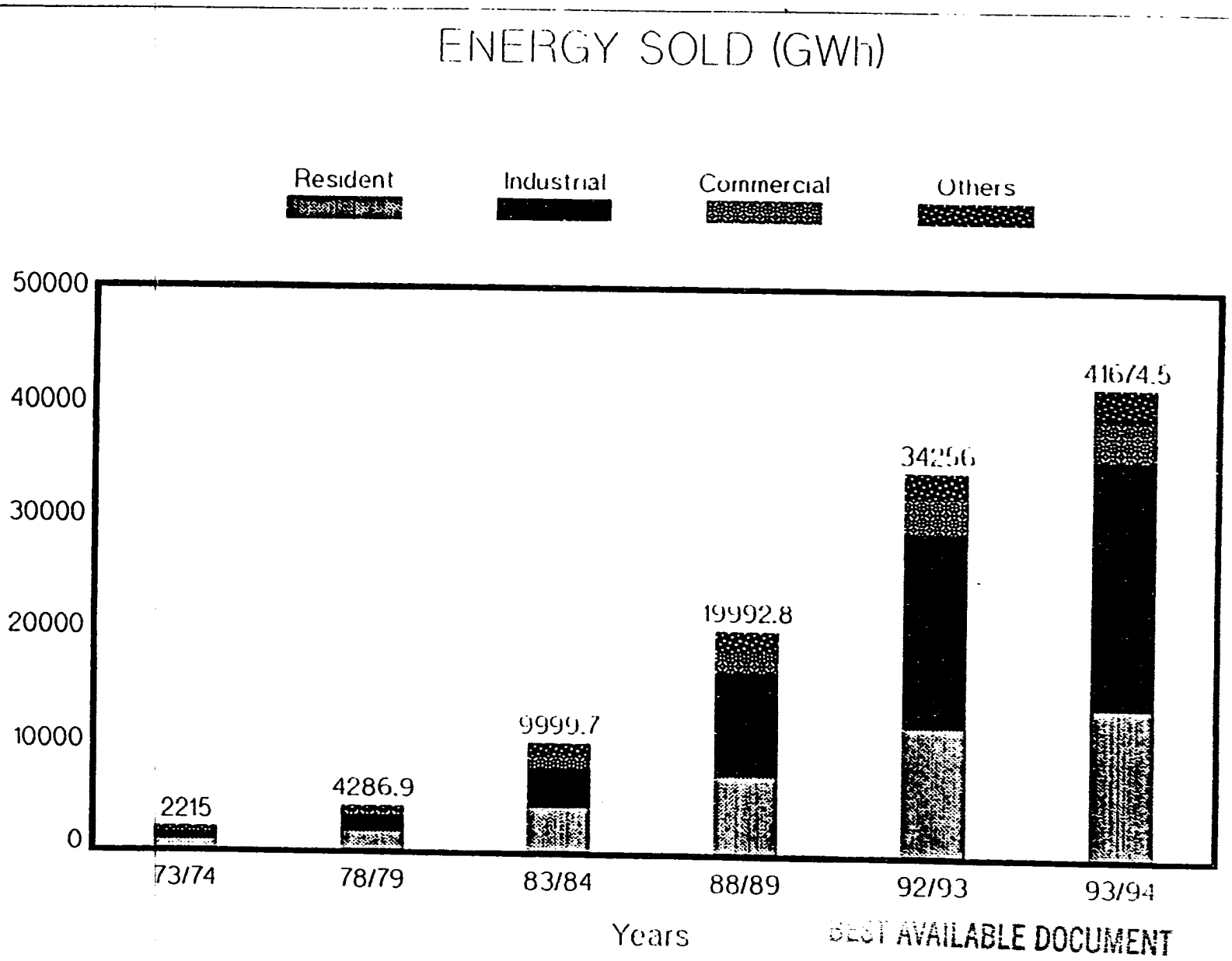

BEST AVAILABLE DOCUMENT

262

IDEPENDENT POWER PRODUCERS
OMMISSIONING UP TO 1998/1999

Appendix-4

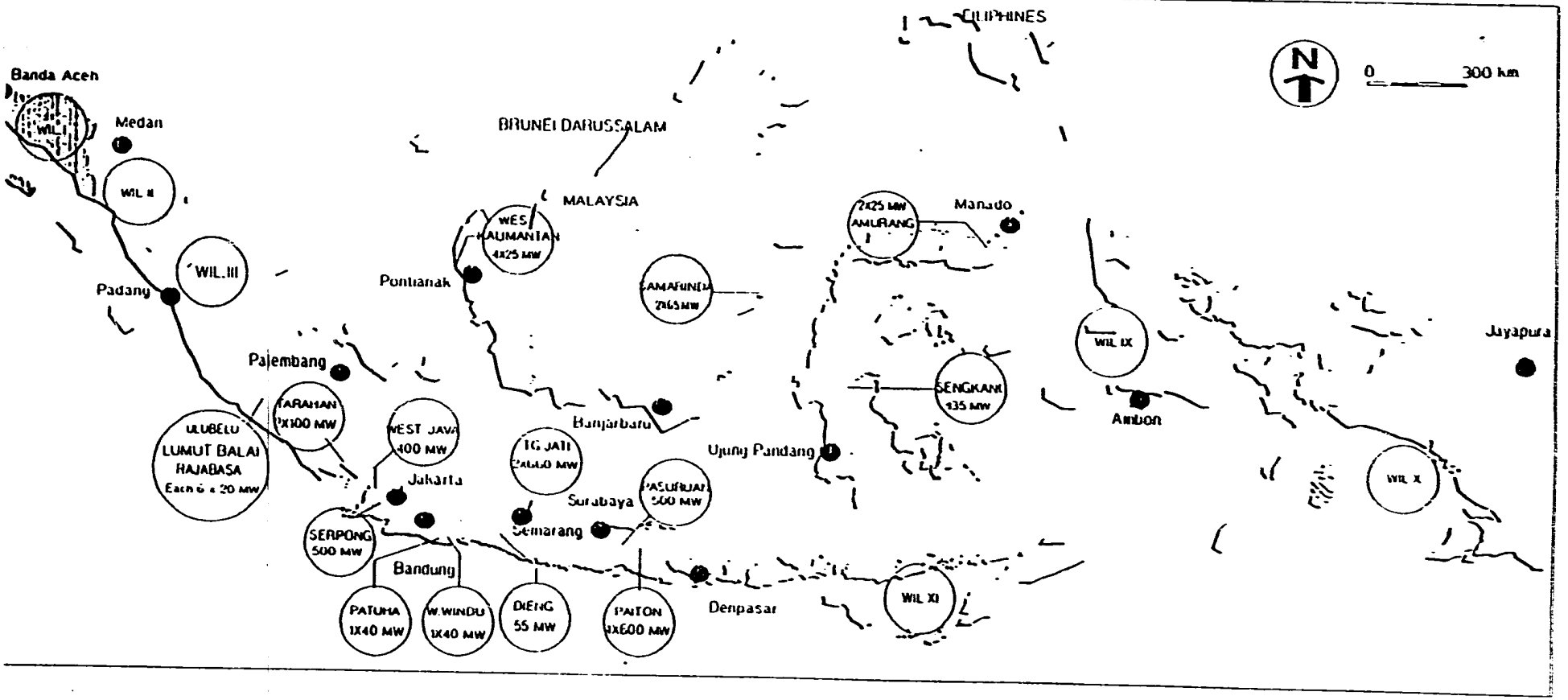

BEST AVAILABLE DOCUMENT

263

BEST AVAILABLE DOCUMENT

Appendix-I

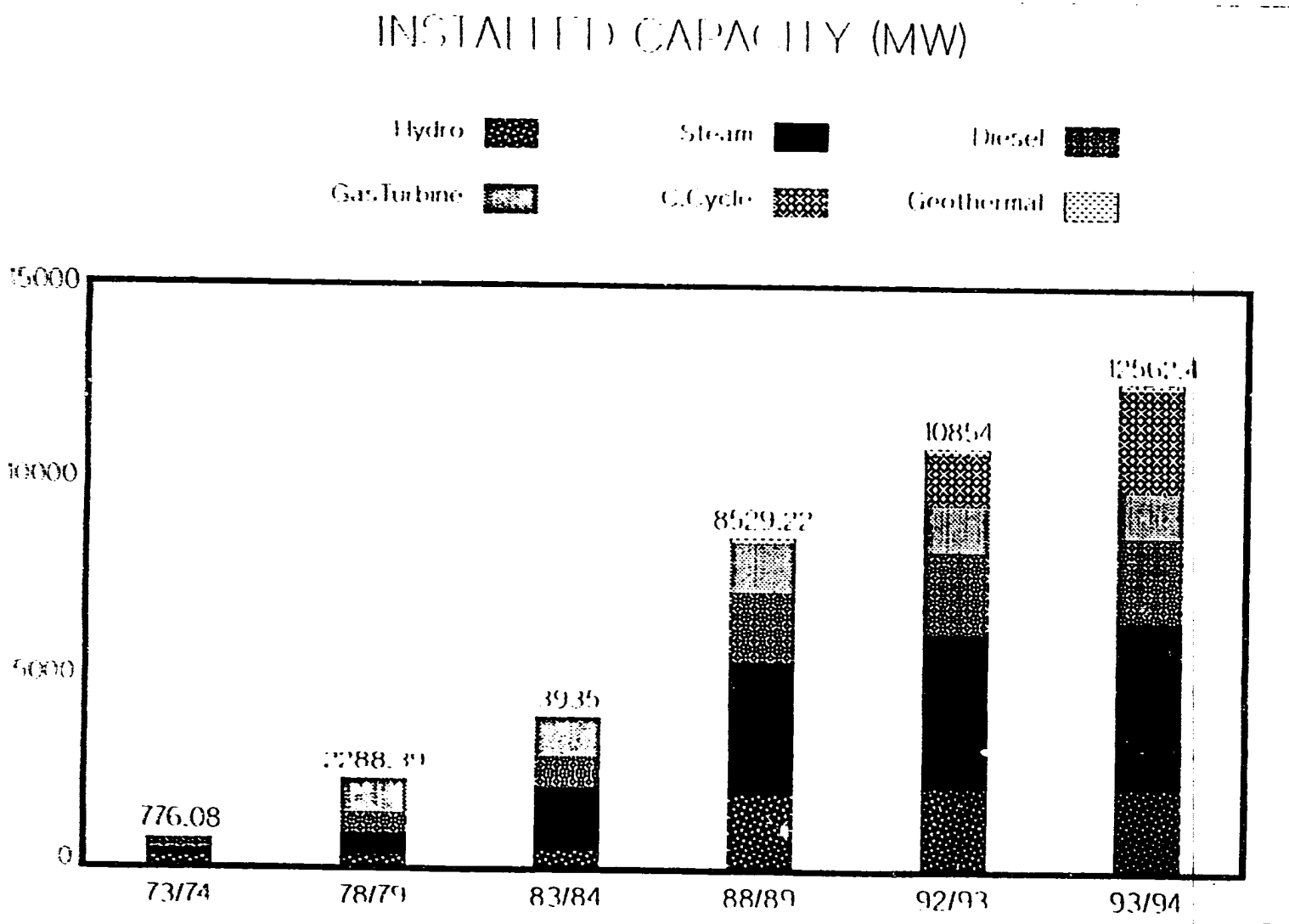

BEST AVAILABLE DOCUMENT

Appendix-2

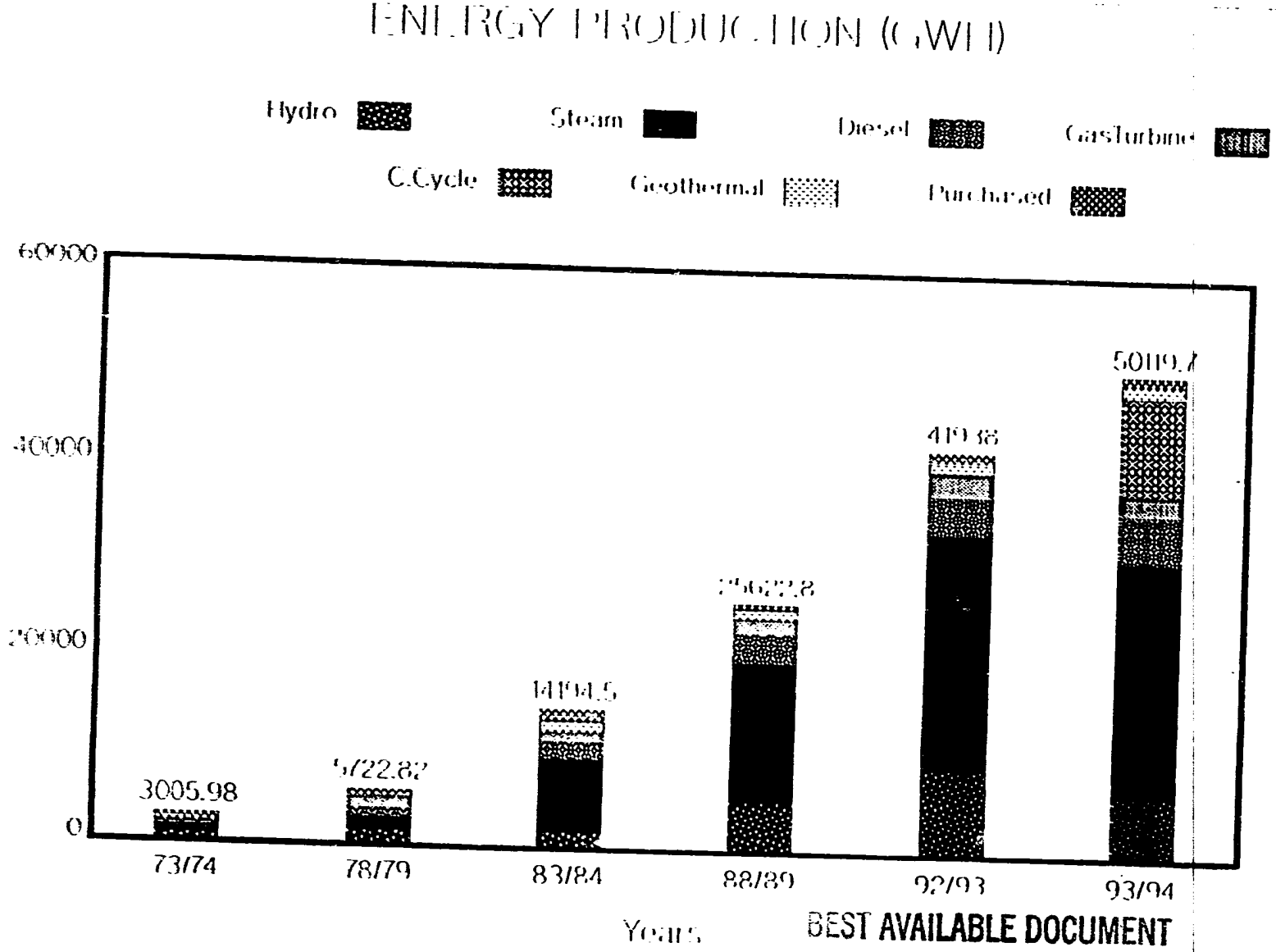

BEST AVAILABLE DOCUMENT

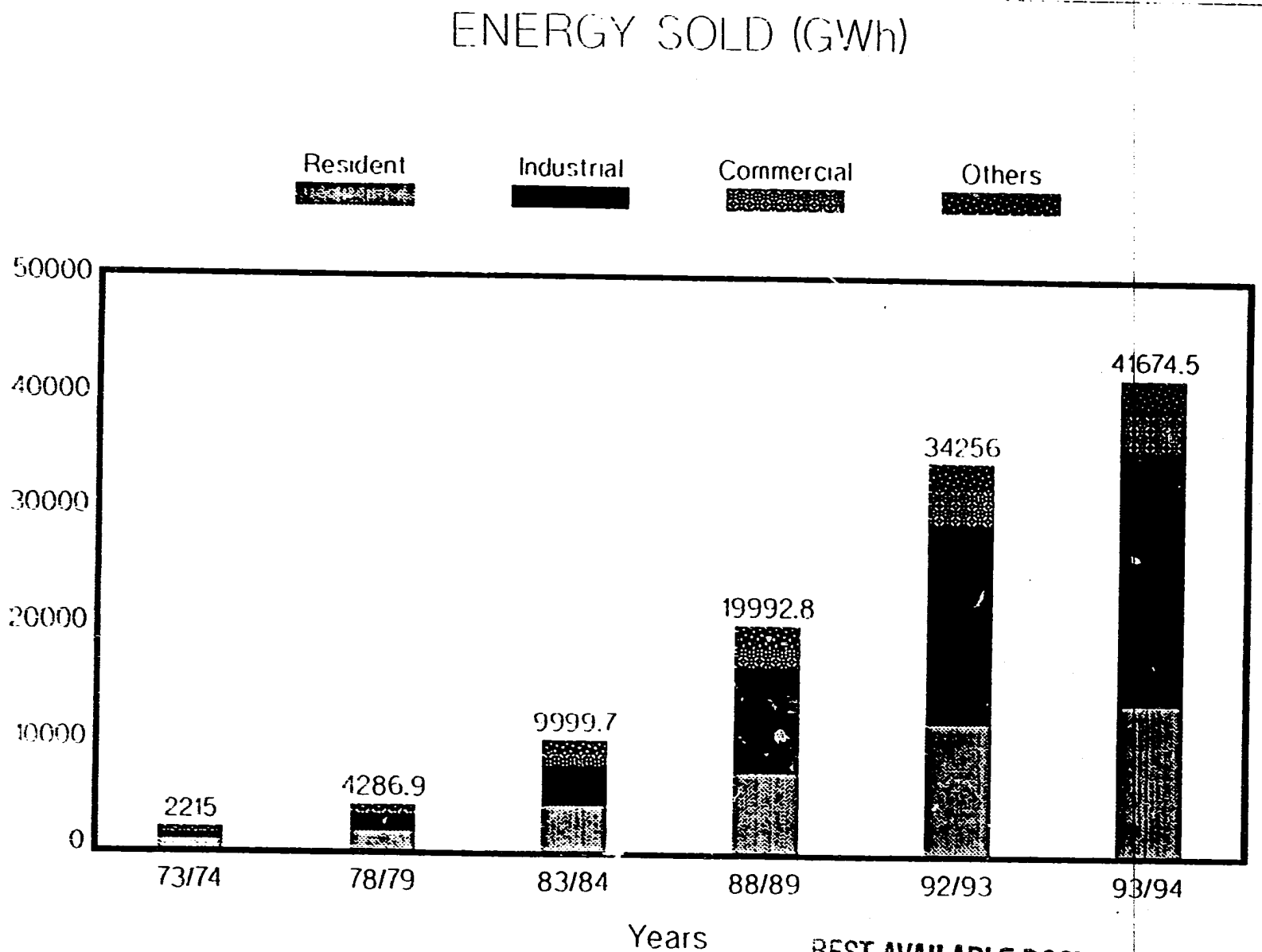

BEST AVAILABLE DOCUMENT

INDEPENDENT POWER PRODUCERS COMMISSIONING UP TO 1998/1999

Appendix

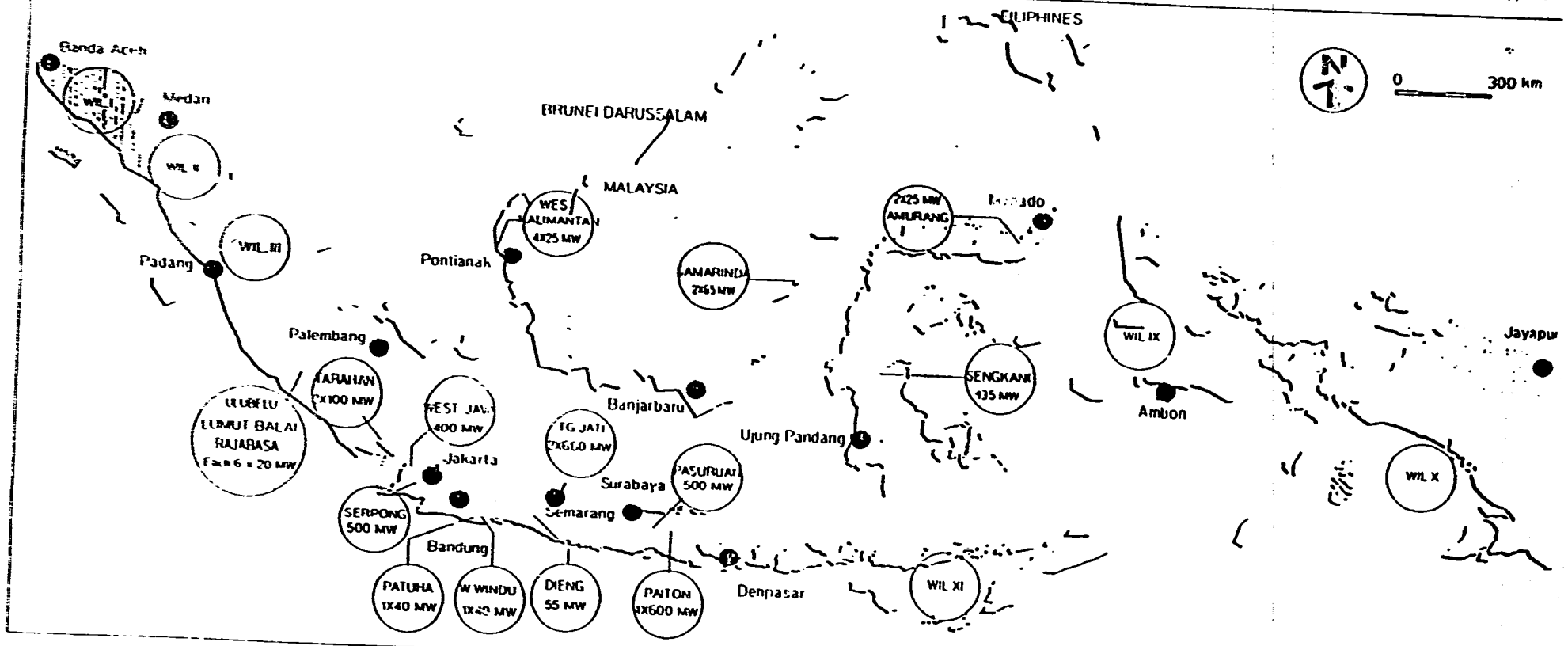

BEST AVAILABLE DOCUMENT

THE ROLE OF PRIVATE POWER FOR FUTURE POWER SUPPLY IN INDONESIA

MOELJADI OETJI
Director of Private Power
Directorate General of Electricity and Energy Development
Ministry of Mines and Energy, Government of Indonesia

268

THE ROLE OF PRIVATE POWER FOR FUTURE POWER SUPPLY IN INDONESIA

- INTRODUCTION
- ELECTRICITY SUPPLY : PAST TREND AND PRESENT SITUATION
- FUTURE ELECTRICITY DEMAND AND SUPPLY OUTLOOK
  - PRIVATE SECTOR ROLE
  - PRIVATE POWER PROJECTS
- PRESIDENTIAL DECREE NO.37/1992
- IMPLEMENTATION GUIDELINES
- FUTURE DIRECTION
- CONCLUSIONS

BEST AVAILABLE DOCUMENT

THE ROLE OF PRIVATE POWER FOR FUTURE POWER SUPPLY IN INDONESIA [1]

MOELJADI OETJI [2]

INTRODUCTION

Mr. Chairman,
Ladies and Gentlemen,

It is a great pleasure indeed to be here today to take part at this International Forum on Private Sector Participation in the Bangladesh Power Sector, sponsored and organized by USAID.

The objectives of this high-level workshop is to provide forum for discussion and evaluate the need and issues related to the development of private participation in the energy sector in Bangladesh.

---

1) Paper presented at the International Forum on Private Sector Participation in the Bangladesh Private Sector, Dhaka, Bangladesh, 8-12 May 1994

2) Director of Private Power, Directorate General of Electricity and Energy Development, Ministry of Mines and Energy, Government of Indonesia.

BEST AVAILABLE DOCUMENT

One way to reach the objectives in that this forum facilitate the opportunity, for exchanges information and sharing of experiences and views in developing privatization programs in other Asian countries.

I have been asked to give a speech on Indonesia's experience in the achievements of the privatization programs.
In line with your interests, I will talk about the Role of Private Power for Future Power Supply in Indonesia. As a background information, I will first talk about the trends in electric power development during the past two decades; then on the future demand and supply outlook, and the prospective role of private power in Indonesia.
I will continue my remarks by an elucidation of the Presidential Decree Number 37/1992 (KEPPRES 37/1992) on Private Sector Enterprises for Electric Power Supply and the recently issued implementation guidelines contained in the Regulation of the Minister of Mines and Energy No. 02.P/03/M.PE/1993.

Lastly, I will touch, in brief, some future steps that will be required to achieve greater efficiency in electricity supply. In concluding my presentation I will draw some conclussions.

ELECTRICITY SUPPLY : PAST TREND AND PRESENT SITUATION

Ladies and Gentlemen,

During the past twenty years, since the First National Five-Year Development Plan was launched in 1969, electricity consumption in the public sector served by the State Electricity Corporation (PLN) has grown at an average rate of 14.7 percent per year. By the end of the Fourth Five-Year Plan (1988/89), the total national electricity consumption (PLN plus private) has reached 41.2 TWh, of which 20.0 TWh was provided by PLN. The rapid growth of consumption was met, within the PLN system, by an increase in installed capacity from only 527 MW in 1968/69 to 8529 MW by the end of the Fourth Five-Year Plan (1988/89), an average growth rate of 14.9 percent per year. The combined PLN and captive power electricity supply development resulted in an increase of the national per capita electricity consumption to 266 kWh and an electrification ratio of 33 percent.

BEST AVAILABLE DOCUMENT

Electricity demand is expected to rise continuously during the Fifth Five-Year Plan (1989/90-1993/94), largely due to increase in productive uses of electricity. Electricity consumption in 1991/92 of 31.5 TWh was 5 percent higher than originally forecasted. Based on the demand forecast, the total national electric energy consumption (electricity produced by PLN and non-PLN generators) is expected to rise from 41.2 TWh in 1988/89 to 63.3 TWh in 1993/94, growing at an average rate of 9.0 percent per year. The share of electricity demand in the public sector (supplied by PLN) will grow from 20.0 TWh in 1988/89 to 41.7 TWh in 1993/94, growing at an average rate of 15.8 percent per year.

In spite of these efforts, the percentage of population in Indonesia provided with electricity remains on the low side, even compared with that of other developing countries. With total number of customers of 13.5 million by the end of fiscal year 1992/93 (March 1993) and total sales of 35.7 TWh, the electrification ratio is only about 36 %. The electrification ratios in other developing countries of Asia in 1990 range from 52.5 percent (Philippines) to 99.9 percent (Korea).

Ladies and Gentlemen,

Indonesia is endowed with a variety of primary energy sources. However, up to the end of the Third Five-Year Development Plan (1983/84), most of the electricity consumed was supplied by oil-fired power plants, either diesel, steam or gas-turbine plants. Since 1984, to diversify primary energy use for electricity generation, other non-oil power plants such as coal and natural gas fired plants and hydroelectric and geothermal power plants have been developed in order to reduce Indonesia's dependence on oil for power generation. In terms of production, the role of oil has been reduced from 79.4 percent at the beginning of the Fourth Five Year Development Plant to 46.3 percent at the end of the plan. During the first year of the Fifth Five-Year Plan (1989/90) the role of oil has been further reduced to 37.2 percent.

Projected demand growth within the PLN system will be met by adding more generating units so that the total installed capacity will grow from 8529 MW in 1988/89 to about 13,500 MW in 1993/94, by an additional capacity of about 5,000 MW.

BEST AVAILABLE DOCUMENT

FUTURE ELECTRICITY DEMAND AND SUPPLY OUTLOOK

Ladies and Gentlemen,

Base on the target of an average annual GDP growth rate during the Sixth Plan of 6.2 percent, and industrial growth rate of 10.5 percent, the rate of growth of electricity consumption would be 16.1 percent, reaching 88 TWh in FY 1998/99. The total public power (PLN) capacity would be about 22000 MW.

The huge demand for electricity in Java would be met primarily with coal-fired power plants. Therefore, there will be a substantial development in the coal-mining sector as well as in the construction of coal-fired generating plants. These would continue for the years thereafter. However, environmental considerations must then be taken into consideration. There is a certain limit of the annual consumption of coal for power generation in a densely populated island like Java.

Hydro energy resources will contribute a considerable amount of capacities until they are exhausted. Another important option would be gas. This source of energy is available in abundance. However, this source will be used primarily for feed stock for industry rather than for power generation. Natural gas reserves have recently been estimated at about 109 trillion standard cubic feet. In the year 2000, the gas supply is estimated to be between 2.5 to 3 trillion cubic feet annually.

PRIVATE SECTOR ROLE

Ladies and Gentlemen,

Historically the private sector has played an important role in the electric power supply of Indonesia, as is documented by the fact that the amount of electricity produced by captive power plants is currently only a little less than the amount of electricity generated by PLN. However, the majority of the private sector's captive generation units are mostly diesel-fueled generating sets and some small gas turbine units, and the electricity is principally generated for own use.

BEST AVAILABLE DOCUMENT

The Government opened the doors for private sector power generation and supply of electricity for public use by Law Number 15/1985 on Electric Energy. Some basic regulations on the development of private power are already in place namely :

1) Law No. 15/1985
2) Government regulation No. 10/1989
3) Presidential Decree No.37/1992
4) Minister of Mines and Energy regulation No. 02.P/03/M.PE/1993
5) Decision of the Minister of Finance No. 128/KMK.00/93

As you probably know, Article 7 of Law Number 15/1985 sets forth the Government's policy on private sector participation in the provision of electricity in Indonesia as follows:

Paragraph (1) states: "The provision of electricity shall be organized by the Government and shall be carried out by the State-owned Enterprise established as the holder of the Electricity Enterprise Authority in accordance with the prevailing regulations".

Paragraph (2) states: " ... to further improve the capability of the Government to provide electricity ... for public use as well as own use, insofar as the interests of the State are not harmed, the widest possible opportunity shall be given to cooperatives and other enterprises to provide electricity based on the Electricity Enterprise Permit (IUKU)".

Please note that the term "other enterprises" includes the private sector.

The Law defines the structure of the power industry by legally enabling private entities and cooperatives to produce electricity for own use as well as for public use. The government intends to expedite the implementation of the Law by more rapidly increasing the private sector and cooperative participation in all types of electricity supply for public use as stated in the KEPPRES 37/1992.

According to the Law and current government regulations, the principal actors revolved in the electric power industry are :

BEST AVAILABLE DOCUMENT

a. Minister of Mines and Energy, is the minister responsible for the electric power sector. The institution and oversight of the power sector is the Directorate General of Electricity and Energy Development.

b. Holder of the Electricity Enterprise Authority. Electricity Enterprise Authority is the Authorization given by the Government to the state-owned enterprise assigned the soletask of providing electricity for public use. State Electricity Corporation (PLN) is the holder of the Electricity Enterprise Authority as further deferred by the Government Regulation Numbers 10/1989 and Numbers 17/1990.

c. Holders of the Electricity Enterprise Permits. Electricity Enterprise Permit is the permit issued by the Government to private entities and cooperatives for conducting power supply operation, either for own use or for public use.

In the past, major electric power development projects have been planned, implemented, and operated almost exclusively by PLN. The government intends to expedite the change of this situation by more rapidly increasing the private sector and cooperative participation in all types of electricity supply for public use as stated in the KEPPRES 37/1992. While the integrated national electricity supply plan is still in the hands of the government, private investors are now invited to implement, own and operate all types of electricity supply projects including utility-size power generation projects and private utilities.

The private sector developers and investors, as the holders of the Electricity Enterprise Permit for Public Use, can participate in the following areas:

- In areas where PLN is already operating but cannot meet the demand, private power projects, under license, can generate and sell bulk power to PLN for distribution to the public.

- In areas where PLN is not operating, the private investors, under license, may provide electricity either for their own uses or to be sold directly to others. The sale of electricity to others includes the following mechanisms:

(a) direct retail sale to consumers by a privately owned utility:
(b) bulk electricity sale to the holders of Electricity Enterprise Permits for Own-Use;

BEST AVAILABLE DOCUMENT

275

(c) bulk power sale to other holders of Electricity Enterprise Permits for Public Use.

In conformance with government policy the ultimate aim of electric power development shall be to provide adequate and reliable supply of electric energy throughout the country, and at prices affordable to the public. This results in the stipulation that the price of electricity shall be controlled by the government, based on the existing laws.

In accordance with the Government's belief that the private sector could play a major role in meeting Indonesia's electricity supply needs and to expedite the development and implementation of private power projects, the Minister of Mines and Energy has established in June of 1990 a Private Power Team (Team). This Team, as a representative of the Government, is responsible for guiding the development of the Private Power Program. The Team has members from several Ministries and Government Agencies and thus is a single point of contact between the Government and the interested private power project developers. The Team is also responsible for guiding the negotiations of all contracts for projects involving electricity sale to PLN and for projects establishing private utilities and for the oversight of all private power projects involving other parties.

PRIVATE POWER PROJECTS

Ladies and Gentlemen,

An investment of about $ 5 billion per year is needed to meet the increase in electricity demand during the Sixth-Five Year Plan (1994/95-1998/99). The Government, through the Private Power Program, intends to establish a planned, structured and permanent private sector participation in electricity supply in Indonesia. It is anticipated that the private sector will develop and finance private power projects requiring an investment of about $1 billion per year.

The first coal-fired private power project to be pursued by the government, is the Paiton I project consisting of two 600 MW coal-fired units. Terms of

BEST AVAILABLE DOCUMENT

276

reference for the project were issued to two developers in December 1990. Proposals were received on September 23, 1991. Subsequently the BMMG project team consisting of Batu Hitam Perkasa, Mission Energy Co., Mitsui & Co., and General Electric Power Funding, was selected to negotiate the terms and conditions for the project and the required power purchase agreement. The negotiations have been concluded and the Power Purchase Agreement was executed in February, 1994.

The Paiton I project is the first private power undertaken by the government and PLN. Although it has consumed a lot of times, it has been a very significant experience for all participants. As a result a better understanding of the issues concerning private power is being established. The complex nature, large size, likely environmental impacts and longer construction period of Paiton I project, in comparison to other private power options, created various matters, that with the spirit of understanding, has been resolved by the concern parties involved. First unit of Paiton I is scheduled to enter commercial operation in June 1998 and the second unit six months later.

The government intends to initiate negotiations for the Paiton II project consisting of additional two 600 MW coal-fired units. These units are planned for commercial operation in December 1999 and June 2000.

In December of last year the government received an unsolicited offer from Hopewell Holdings, Ltd., to build four to eight 660 MW coal-fired units on Java. The government found the offered price and quick implementation schedule adequately attractive to warrant expedited processing. The Government has issued a Letter of Preliminary Approval to Hopewell Holdings Ltd. for the construction of 2x660 MW. The proposed commercial operation date for the first unit is in January 1998 and the second unit coming on line after three months.

SOLICITED PROJECTS

For future solicited projects, the Government has also decided five other solicited projects, namely :

BEST AVAILABLE DOCUMENT

1. Tanjung Jati coal-fired project, Central Java, 2x600 MW

2. West Java coal-fired project, 400 MW

3. Patuha geothermal project, West Java, 40 MW

4. Wayang Windu geothermal project, West Java, 40 MW and

5. Pontianak peat or coal-fired project, West Kalimantan, 4x25 MW.

UNSOLICITED PROJECTS

In accordance with KEPPRES 37/1992 and the implementation guidelines, interested parties can submit unsolicited proposals for projects that are identified by the private sector and are outside of the system expansion plan. Numerous proposals have been received within the last eighteen months. After due consideration by the government and PLN, Letters of Preliminary Approval (LPA) have, so far, been issued for thirteen projects. The Letter of Preliminary Approval grants an exclusive right for a period of time to the project sponsor, allowing him to conduct the necessary feasibility and environmental studies. Based on the studies a definitive proposal is to be submitted to the government, forming a basis for negotiating a Power Purchase Agreement. These projects are:

Gas Fired Combined Cycle Projects

* Bumi Serpong Damai City, West Java, 500 MW.
* East Java, 500 MW.
* Sengkang, South Sulawesi, 135 MW.
* Samarinda, East Kalimantan, two units of 65 MW.

Coal Fired Projects

* Awar-Awar, East Java, 2 x 660 MW.
* Sibolga, North Sumatra, 3 x 55 MW.
* Amurang, North Sulawesi, 2 x 25 MW.
* Tarahan, Lampung, Sumatra, 2 x 100 MW.

BEST AVAILABLE DOCUMENT

228

Geothermal Projects

* Dieng, Central Java, 55 MW.
* Lumutbalai in South Sumatra, each of 6 x 20 MW.

Further implementation of the above mentioned projects, solicited and unsolicited projects, will be done in accordance with the amount of offshore financing granted by the Government.

PRESIDENTIAL DECREE 37/1992

Ladies and Gentlemen,

Following is a summary of intent of the Presidential Decree Number 37/1992 (KEPPRES 37/1992) concerning Private Sector Enterprises for Electric Power Supply. It is important to note that this KEPPRES is based on Law 15/1985 on Electric Energy and intends "to encourage private sector enterprises and cooperatives to finance development, own and operate electric supply projects including generation, transmission and distribution enterprises".

Article 1 states that this KEPPRES applies to Private Sector Enterprises for Supply of Electricity for Public Use licensed through the IUKU license.

Article 2 stipulates that both solicited as well as unsolicited private power projects will be considered, preferentially using the "BOO" contract mechanism, although other mechanism may also be considered. Investment for private power projects may be on the basis of the Foreign Investment Law (PMA) or the Domestic Investment Law (PMDN) or outside these investment laws.

Article 3 stipulates that the Minister of Mines and Energy grants the IUKU license and the license can cover generation or transmission or distribution business, individually or in combination. The power generated or the transmission and/or distribution services can be sold to PLN or to others and the transaction must be covered by a contractual agreement.

BEST AVAILABLE DOCUMENT

Article 4 stipulates that the price of electricity sold or for transmission and/or distribution services will be set in Rupiahs and the price can be adjusted during the life of the contract based on certain cost variations agreed to in the contract. The price must be the lowest possible and must be approved by the Minister of Mines and Energy.

Article 5 stipulates that the Government shall not guarantee debt or debt repayment for private power projects.

Article 6 outlines certain import duty and value added tax (VAT) facilities for private power projects and stipulates that these will be defined in more detail by the Minister of Finance. Follow up implementation guidelines have been issued in the form of Minister of Finance Decision No. 128/KMK.00/1993 dated February 10, 1993. These implementation guidelines stipulate:

- Exemption from custom duties on procurement of imported capital goods and equipment (including spare parts) during the construction period.

- Exemption from Article 22 income tax.

- Postponement of VAT on all imported capital goods and equipment during the construction period.

Article 7 stipulates that private power projects must be carried out in accordance with government policies and with concern for availability of primary energy and the environment. Fuel supply is to be arranged by the project sponsor, on a priority basis from domestic sources. Non-petroleum fuels must be used unless their use is not economically or technically viable.

Article 8 stipulates that the Minister of Mines and Energy is responsible for the development of private power industry and for its oversight.

Article 9 requires that the Minister of Mines and Energy promulgates more detailed regulations to facilitate the implementation of this KEPPRES.

BEST AVAILABLE DOCUMENT

IMPLEMENTATION GUIDELINES

Ladies and Gentlemen

In accordance with Article 9 of the KEPPRES 37/1992 implementation guidelines have been issued in the form of Minister of Mines and Energy Regulation No.: 02.P/03/M.PE/1993 entitled Regulations for Implementing Private Sector and Cooperative Enterprises to Supply Electric Power for Public Use.

In accordance with Article 8 of the KEPPRES 37/1992 to facilitate the development and oversight of private power industry a Directorate of Private Power has been established in the Directorate General for Electricity and Energy Development.

The intent of the Minister of Mines and Energy Regulation is elucidated below. This regulation specifically covers private sector and cooperative enterprises intending to supply electricity for public use but does not apply to captive power projects supplying electricity for own use.

The regulation is divided into eighteen Parts as follows:

PART I,	covers general issues.
PART II,	covers implementation of the enterprises.
PART III,	covers solicited projects.
PART IV,	covers unsolicited projects.
PART V,	covers licensing.
PART VI,	covers the transfer provisions for IUKU Permit.
PART VII,	covers enterprises intending to sell electricity directly to the public.
PART VIII,	covers co-generation projects.

BEST AVAILABLE DOCUMENT

PART IX,	covers interconnection.
PART X,	covers the rental of transmission and distribution networks.
PART XI,	covers pricing of electricity and of renting transmission and distribution networks.
PART XII,	covers primary energy.
PART XIII,	covers the rights and obligations of permit holders.
PART XIV,	covers project oversight.
PART XV,	covers reporting requirements of permit holders.
PART XVI,	covers sanctions.
PART XVII,	covers stipulations and changes.
PART XVIII,	covers conclusions.

Following is an analysis and explanation of intent of select key parts of the Regulation.

PART I, General, offers definition of terms used in the Regulation and it stipulates that two types of private power projects supplying electricity for public use, both based on the IUKU Permit, are recognized by the Government: solicited projects - are those projects that have been selected for private sector implementation from the Governments system expansion plan;
Unsolicited projects - are projects not included, at the time the offer is extended, in the Government's system expansion plan and are proposed by interested parties for Government's consideration.

BEST AVAILABLE DOCUMENT

282

PART II, Enterprise Implementation, stipulates that IUKU-licensed enterprises can sell electricity to PLN or to other IUKU license holders or to the general public and/or the rent transmission and/or distribution networks. The sale or rental transactions shall be arranged in accordance with a power purchase/sale agreement or a rental agreement. Solicited project are required to sell the electricity produced to PLN while unsolicited projects are free to sell their electricity or rent their transmission and/or distribution services to anyone.

PART III, Electric Power Projects Specified by the Government, focusses on the identification, development and implementation of solicited projects. Build-own-Operate (BOO) mechanism is preferred for these projects to be implemented by a sponsor(s) selected after a competitive prequalification and bid. The process leading to the selection of a sponsor for a solicited project shall be structured as follows. For each solicited project there shall be a public announcement of prequalification followed by a prequalification conference. During the conference potential project sponsors who purchased prequalification documents will receive additional project related information and will have an opportunity to ask project related questions. Not more then thirty days after the prequalification conference all interested parties will be required to submit their completed prequalification documents. Within ninety days after the prequalification deadline a prequalification committee appointed by the Director General of Electricity and Energy Development will complete the evaluation of the pre-qualifications. In the evaluation the following criteria shall be used in addition to other criteria that may be announced in the prequalification documents sold by the Government. Administrative, financial and technical capability of the potential sponsor(s) shall be considered together with their experience in implementing the same or similar power projects.

After completing the evaluation of the prequalifications the Director General identifies five potential project sponsors and recommends to the Minister to invite these parties to bid on the project. Once the Minister approves the bidding of a project by the selected five potential sponsors, terms of reference will be issued to these five participants and a bid conference will be held for the benefit of the bidders. Not later then 180 days after the bid conference, the bidders will be required to submit their proposals. These proposals will be evaluated by a bid committee within ninety days after the bid deadline, following these evaluation criteria:

BEST AVAILABLE DOCUMENT

a. Administrative and project funding capability of the sponsors;
b. Technical considerations;
c. Ability to control environmental impact;
d. Primary energy or fuel use;
e. Price;
f. Implementation schedule;
g. Bid guarantees.

The Director General will recommend one winner of the bid to the Minister and the Minister shall select the winner. After the selection the winner of the bid shall be announced to the other participants of the bid.

The letter advising the winner of the bid about his selection may be used to submit a request for an investment approval. This request shall be addressed to the Director General who shall take the necessary steps to initiate the investment approval process with the Foreign Commercial Loan (PKLN) committee. This process shall be further defined and regulated in the future.

Depending on the complexity and status of development of the project it may be required for the winning bidder to prepare a detailed feasibility study within a period not greater then 450 days after the winning bidder was selected. Proposal submitted on the basis of this study will be evaluated and environmental impacts and proposed impact mitigation measures of the project shall be considered by an AMDAL team. After the Minister receives AMDAL and Director General reports that are positive in nature the Minister shall select the winning bidder as the Prospective IUKU Permit holder.

Within six months after selection an Interdepartmental Negotiating Team shall complete negotiations with the Prospective IUKU Permit holder and submit a written report to the Minister. After the Minister approves the report and the negotiated contract the seller and the buyer for non-PMA and non-PMDN investments the Minister shall issue a Principle Permit. For PMA or PMDN investments after the Minister's approval the Prospective IUKU Permit holder is required to apply to the BKPM and the BKPM Chairman has the authority to issue a SPPP letter for PMA investment and SPPM letter for PMDN investment. These letter have an equivalent status with the Principle Permit that is issued for non-PMA and non-PMDN investments.

BEST AVAILABLE DOCUMENT

284

Once the Principle Permit is issued the sponsor is required to submit a detailed construction schedule to the Director General with a copy to the Chairman of BKPM. Construction must begin not later then 180 days after the Principle Permit was granted and must be completed within the period specifies within the Principle Permit or the SPPP or SPPM letters. Commercial operation of the project can not begin until a commissioning test was successfully completed by a commissioning team designated by the Director General. After successful commissioning test the Director General shall issue a commissioning certificate that will be the basis for the issuance by the Minister of an IUKU Permit for non-PMA or non-PMDN investment project. For PMA or PMDN investment projects the Chairman of BKPM shall issue the IUKU Permit on the basis of the Commissioning Certificate issued by the Director General.

PART IV, Electric Power Projects Proposed by Prospective Investors, deals with the procedures that shall be followed by unsolicited projects.

Prospective investors wishing to propose for Government consideration projects not identified in the Government's system expansion plan must submit a request to the Minister through the Director General. The request must contain adequate information, such as :

a. project site;
b. type and capacity of the plant;
c. primary energy to be used;
d. area to be covered by the enterprise;
e. construction plans;
f. project financing plans;
g. operations and maintenance plan;
h. manpower use plan;
i. drawings, maps and other relevant documents;
j. administrative provisions.

The request shall be submitted to PLN for consideration of the following project aspects:

a. ability of PLN to supply electricity with the area of the proposed project;

BEST AVAILABLE DOCUMENT

b. PLN plans to supply electricity within the area of the proposed project;
c. impact of the proposed project on PLN system and the possibility of interconnection.

After obtaining inputs concerning the above aspects from the PLN and based on the evaluation of the request the Director General may request additional information from the prospective sponsor. The evaluation shall consider the following criteria:

a. Administrative and project financing capability of the prospective sponsor;
b. Technical aspects of the project;
c. Mitigation of environmental impacts caused by the project;
d. Use of primary energy;
e. Proposed price;
f. Implementation schedule.

Evaluation must be completed by the Director General not later then 60 days after a complete request is submitted and if the project is found beneficial to the Government a Preliminary Approval will be issued by the Director General. Once a Preliminary Approval is issued to a certain prospective sponsor other requests that would compete with the selected project will not be considered unless the selected project is rejected by the Minister to become a Prospective IUKU Permit Holder.

The Preliminary Approval can be used as a basis for requesting investment approval. This request for investment approval shall be submitted to the Director General who shall take the necessary steps to initiate the investment approval process with the PKLN committee. This process shall be further defined and regulated in the future.

After receiving the Preliminary Approval potential sponsor is required to prepare a detailed feasibility study for the proposed project within a period of not more then 450 days. If the evaluation of the proposal based on the feasibility study and the AMDAL evaluation is positive the Minister upon recommendation of the Director General may establish the requestor as a Prospective IUKU Permit holder.

BEST AVAILABLE DOCUMENT

For projects intending to sell electricity to PLN and/or to rent transmission or distribution services to PLN, an interdepartmental negotiating team will be established by the Director General and within a period not exceeding 6 months will negotiate an agreement and present the results to the Minister.

For projects intending to sell electricity and/or transmission or distribution services to other IUKU Permit holders or to general public the Prospective IUKU Permit holder shall negotiate with the electricity and/or transmission or distribution service buyers and within a period of not more than 180 days shall submit the agreements to the Director General. After evaluation the Director General shall submit a report on the agreements, including terms and condition of the transaction, electricity sale price or the rental price of transmission and/or distribution system to the Minister for approval. After the Minister approves the agreements and sets the price, for PMA and PMDN investment projects the Director General shall inform the Chairman of BKPM and he is authorized to issue SPPP or SPPM letters for PMA or PMDN investments respectively, upon request from the Prospective IUKU Permit holder.

For non-PMA or non-PMDN investment projects the Minister shall issue a Principle Permit for the project.

Within 60 days after receiving the Principle Permit or SPPP or SPPM letter the prospective project sponsor is required to submit to the Director General a detailed construction schedule and construction is required to begin no later then 180 after the Principle Permit or the SPPP or SPPM letter were issued and must be completed within a period specified in the Principle Permit or the SPPP or SPPM letter.

Commercial operation of the project can not begin until a commissioning test was successfully conducted by a commissioning team established by the Director General at the cost of the Prospective IUKU Permit holder. After the commissioning certificate is issued by the Director General, for PMA or PMDN investment project the Chairman of BKPM shall issue an IUKU Permit. For non-PMA or non-PMDN investment projects the Minister shall issue the IUKU Permit.

PART V, Licensing, covers the validity, extension and change of Principle Permit and the IUKU Permit.

BEST AVAILABLE DOCUMENT

The maximum period of validity of the Principle Permit or the SPPP or SPPM letter is set in accordance with the type of project ranging from about 2 years for the construction of diesel generation, gas turbine, combined cycle and transmission and distribution projects to about 5 years for hydroelectric projects, and can be extended if necessary.

An extension can be granted if serious obstacles, not under the control of the Prospective IUKU Permit holder, arise. The Holder must request an extension not later then 90 days before the validity expires or not later than 7 days after a force majeure occurs.

The IUKU Permit for a PMA investment project is valid for 30 years from the beginning of commercial operation and can be extended. IUKU Permit for an PMDN investment project is valid as long as the company concerned properly operates the enterprise. The validity of an IUKU Permit terminates if it is returned, canceled or the validity expired.

The Principle Permit or the IUKU Permit can be canceled if their holder does not fulfil conditions stipulated in existing regulations or if their holder does not follow the technical guidance given by the Director General during construction or operation of the project. For PMA or PMDN investment projects the permits can be canceled by the Chairman of BKPM and for non-PMA or non-PMDN investment projects the permits can be canceled by the Minister.

If the permit holder intends to change the size of the nature of the project he must submit a request to the Minister through the Director General for non-PMA or non-PMDN investment project. For PMA or PMDN investment project a copy of the request for change must be submitted to the Chairman of BKPM who will make a decision in the name of the Minister based on a recommendation of the Director General. Change will only be approved if the change does not have a negative impact on the reliability of the electricity supply system, on the environment or on the supply of primary energy.

Part VI, Transfer of an IUKU Permit, covers the requirements that must be met for an approval to transfer IUKU Permit to be granted. The intent to transfer an IUKU Permit must be reported to the Director General and the proposed recipient company must apply for a new IUKU Permit. The Director General must evaluate the proposed transfer and report to the Minister who shall grant the final approval.

BEST AVAILABLE DOCUMENT

Transfer of a project to PLN must be approved by the Minister of Finance. Principal objective of the Government in connection with holding the IUKU Permit is to assure that only companies with the appropriate technical, financial and operational capabilities are chosen to assure reliability of electric power supply. For PMA or PMDN investments approval of BKPM is required before any transfer of IUKU Permit approved.

Part VII, An IUKU Permit holder selling electricity directly to the public, covers the enterprise of private utilities. The Minister shall determine the geographical area within which an IUKU Permit holder can sell electric power directly to the public. The IUKU Permit holder will not be allowed to sell electricity outside of the designated area. Customers within the designated area can be general public and/or special customer groups, for example only industrial or commercial customers or their mix.

Customers within a geographical area designated for private utility shall be allowed to self supply their electric power needs in accordance with existing regulations, if the IUKU Permit holder is not able to meet the required quality or quantity of electric power supply within the area.

Part VIII, Co-Generation, deals with the desire to promote higher efficiency of primary energy use through the application of cogeneration for electric power generation where possible. Within areas of IUKU Permit holder cogenerators are encouraged to operate and the IUKU Permit holder will be able to buy electric power from them at a price to be determined by the Minister.

Part IX, Interconnection. The Government wishes to assure that all IUKU Permit projects are interconnected with PLN or other IUKU Permit holders to assure higher efficiency and system reliability wherever technically and economically viable.

Part XI, Electric power sale prices and network rental costs. Pricing of electric power and transmission and/or distribution network rental shall be guided by the principles set in the KEPPRES 37/1992. In accordance with this Part of the Ministerial Regulation, the Director General is in the process of establishing guidelines for calculating the sale prices.

BEST AVAILABLE DOCUMENT

FUTURE DIRECTION

In accordance with the government decision to permanently incorporate private sector participation in electricity supply, a dramatic restructuring of the power sector will undoubtedly have to follow. Experience in developed and developing countries alike shows that restructuring of the electricity supply sector is difficult, time consuming process requiring major shift in the perception of the sector. To achieve greater efficiency in electricity supply and to gain access to non-governmental financial resources, gradual shift from total government control to the market forces of open competition with certain degree of regulatory oversight is required.

Carefully designed process adequately guided by government policies and strategies can give rise to new, more efficient electricity supply sector structure. Competitive environment supported by transparent regulations and strong institutional structure will facilitate meeting the country's electricity needs while allowing gradual withdrawal of the government from the sector.

To support the government objectives numerous private power strategies need to be explored. While gradually developing our manpower resources and expertise in the policy, regulatory and institutional arena, we intend to explore a variety of modes of private sector participation. The government and PLN are considering ways to restructure the PLN and the electricity supply sector as a whole to achieve the introduction of competitive forces leading to greater efficiency. This process, although needing to be expedited, must inevitably go through several, carefully managed stages, to assure stability and predictability of electricity supply, a key ingredient of continued national development.

To support private power initiatives within the context of sector restructuring the Directorate General of Electricity and Energy Development will be soliciting technical assistance. The technical assistance will focus on Regulatory Restructuring of the power sector and on Private Power Development.

In addition to the above described large projects, "small projects", up to 50 MW within the Java-Bali grid and less in smaller grids, will be able to sell electricity to PLN under a relatively simple, standard contract at a price that will be periodically published for specific areas. The objective is to tap existing captive power generators but new projects can be included. Simple electricity supply

BEST AVAILABLE DOCUMENT

290

arrangements for small generators should stimulate tapping renewable and nontransportable primary energy sources. It is hoped that the development of numerous micro and mini-hydro, bioenergy and other projects are stimulated by this strategy. Increased efficiency of fuel use through the application of cogeneration is another major objective of this strategy.

The tariff and terms and conditions for these projects are still being developed. However, the tariff will be structured to pay for energy based on avoiding high speed diesel fired gas turbine on Java-Bali, or in small off Java grids, or diesel-fired diesel generator in isolated areas. Capacity charge will be included for projects that are able to provide dependable capacity. On peak and off peak prices are being established. Once all ongoing work is completed, prices and terms and conditions will be announced and widely publicized. Standard contract requiring minimal negotiations will be provided. Any generator accepting the offered price and the terms and conditions in the standard contract will be able to enter into an electricity supply contract with PLN.

According to the decision of the government concerning the restructuring of PLN numerous, highly diverse opportunities for private sector may be created. However, any discussion of these possible opportunities must await the results of the ongoing policy dialogue within the government. Once there is an adequate clarity as to the direction taken, we intend to inform the private sector and initiate project activities.

CONCLUSIONS

Ladies and Gentlemen,

Based on the preceding discussion, let me draw the following conclusions:

a) The role of the power sector in national development is considered vital to the economy; therefore the government is obliged to guarantee sufficient supply of electricity to the public to improve the people's welfare and to stimulate economic growth.

BEST AVAILABLE DOCUMENT

b) The government, through PLN, has pursued and shall continue to pursue electrification program vigorously in order to meet the growing electricity demand. This will require a share of available funds. This demand will be met by combination of public and private power supply. Private power projects shall use the Build-own-operate scheme as it is preferred by the Government. The power produced by private sector generators may be sold to PLN or to others.

c) Law Number 15/1985, Government Regulation Number 10/1989 and KEPPRES 37/1992 establish the basis for private sector participation in electricity supply for public use. Furthermore Regulation of the Minister of Mines and Energy No. 02.P/03/M.PE/93 and Decision of the Minister of Finance No. 128/KMK.00/93 will be used to guide the development, implementation and operation of private power projects.

d) Private power will gradually play greater role in electricity supply in line with evolving government policies and strategies concerning electricity supply;

e) Significant restructuring of PLN and the electricity supply sector, likely to be accomplished in several steps, should lead to greater, real opportunities for private sector participation. A strong institutional structure with transparant and consistent regulations, will be required to facilitate the private power participation in the electricity supply, as part of the national development.

f) In addition to solicited and unsolicited private power projects other modes of private sector electricity supply will be explored;

g) Standard contract and published tariff for purchasing electricity from small generators are being developed;

BEST AVAILABLE DOCUMENT

Ladies and Gentlemen,

In closing, may I convey to all of you our Government's commitment to private sector participation in electricity supply in Indonesia. The Government realizes that our private power program is in its infancy. We are eager to learn from experiences of other countries to expedite the development of an environment that actually leads to efficient private sector supply of electricity. The pressure to find concrete solutions is increasing. It is the Government's responsibility to give clear policy signals that can be further developed into strategies, regulations and institutional arrangements supportive of efficient private sector participation.

Thank you for your kind attention.

BEST AVAILABLE DOCUMENT

TAB 6

Italy:

- **Law 9 January 1991 No. 9 (Excerpts)**
- **Law 9 January 1991 No. 10 (Excerpts)**

PRESIDENTIAL LAWS, DECREES AND ORDINANCES

Law 9 January 1991, N° 9

Rules for the implementation of the new National Energy Plan: institutional aspects, hydroelectric stations and transmission of electricity, hydrocarbons and geothermal energy, selfgeneration and fiscal provisions.

The Chamber of Deputies and the Senate of the Republic have approved.

THE PRESIDENT OF THE REPUBLIC

promulgates

the following law:....

...TITLE III

REGULATIONS FOR SELFGENERATORS AND ELECTRIC COMPANIES OF LOCAL ORGANIZATIONS

Article 20.

{Rules for selfgenerators using conventional sources of energy}

1. The third paragraph of number 6) of Article 4 of the Law N° 1643 of 6 December 1962 is replaced by the following:

> "The company is allowed, within the terms and conditions of the next two paragraphs, to produce electrical energy for their own use or to be transferred ENEL and, in case of firms formed as a corporation, for use by State-controlled corporations, the controlling corporation and corporations controlled by the controlling corporation itself, permitting exchanges and transfers among the latter."

The Minister of Industry, Commerce and Craftsmanship authorizes the selfgeneration of electrical energy on the part of the subjects of the preceding paragraph, for the purposes therein provided for, utilizing existing plants, new additions to existing or new plants, taking into account compatibility with the public interest and correspondence with the economic and productive needs of the connection between the corporations referred to in the preceding paragraph, and also related to the requirements not associated with new production facilities.

BEST AVAILABLE DOCUMENT

All the electrical energy production that exceeds the amount consumed by the selfgenerator must be transferred to the ENEL. For that purpose the entities referred to in the third paragraph may stipulate with ENEL agreements regarding transfer, exchange, production for third parties and transmission of the electrical energy, according to the terms indicated in the proper binding directives promulgated by the Ministry of Industry, Commerce and Craftsmanship regarding the technical feasibility of the abovementioned operations and the public service requirements of ENEL. The prices related to the transfer of electricity production to ENEL, transmission and the parameters relative to the exchange will be defined within one hundred and eighty days from the effective date of this law and will be updated at least every two years by the Interministerial Committee on Prices (CIP) on the basis of the criterion of avoided costs".

2. Exchanges and transfers between local organizations and their companies are also allowed, as defined by Article 22 of Law No. 142 of 8 June 1990, as well as between corporations with participation of local bodies and/or of their aforementioned companies.

3. The authorizations issued prior to the effective date of this law remain valid.

4. Electrical energy supplies provided for in Article 6 of the Presidential Decree No. 1165 of 21 August 1963, for the quantities and prices referred to in Article 7 and 8 of the same decree are extended until 31 December 2001. On that date, such suppliers will be reduced in progressively decreasing amounts, according to the provisions of Article 4 of Law No. 529 of 7 August 1982, over the following six years.

5. Article 10 of the Order in Council No. 68 of 17 March 1980, converted, with modifications, from the Law No. 178 of 16 May 1980, is replaced by the following:

> "Article 10.- 1. The installation and operation of generators for the production of emergency electrical energy in the agricultural, commercial, craft, or industrial companies as well as in hospitals and nursing homes, are not subject to the authorization provided for in Law No. 1643 of 6 December 1962, and successive modifications and integrations, provided they are carried out according to safety and environmental rules.
>
> 2. The installation and operation of continuously operating generators with a nominal power not greater than 500 kw, provided that it is executed with respect to environmental and safety rule, is also not subject to the authorization provided for in the law referred to in paragraph 1 and all of its subsequent modifications and integrations.
>
> 3. The entities that plan to arrange for the installation of the facilities covered in paragraphs 1 and 2 must inform the Ministry of Industry, Commerce and Craftsmanship, ENEL and the technical division of the manufacturing tax office with jurisdiction in their territory."

6. Article 13 of the Presidential Decree No. 36 of 4 February 1963 as modified by Article 21 of Presidential Decree No. 342 of 18 March 1965 is repealed.

7. The 70 percent limits referred to in No. 6) of Article 4 of Law No. 1643 of 6 December 1962, no longer apply from the effective date of this law.

BEST AVAILABLE DOCUMENT

8. In cases of a waiver from ENEL according to the terms of Article 2, section 2 of the Law No. 529 of 7 August 1982, the extension of the duration of the hydroelectric concessions is provided for, on request of the concessionaire, by decree of the Minister of Public Works together with the Minister of Industry, Commerce and Craftsmanship, having consulted ENEL, provided that this is not hindered by more important reasons of public interest and for a maximum duration within the limits set by the agreement referred to in Article 3 of the abovementioned law. Such a maximum duration is also to be applied to the concessions extended to companies of local organizations according to Article 8, paragraph 4, of Law No. 102 of 2 May 1990....

....ARTICLE 22.

{Regulations for electricity production utilizing renewable or recovered energy sources}

1. The production of electrical energy by facilities that utilize renewable energy sources of energy considered renewable or recovered, according to the regulations in force, and particularly the production of electrical energy by means of cogeneration facilities, is not subject to the exclusive right of ENEL to produce electrical energy as provided by Article 1 of Law N° 1643 of 6 December 1962 and all subsequent modifications and integrations thereof, and to the authorizations provided for by the regulations issued regarding the nationalization of electrical energy.

2. The entities that plan to arrange for the installation of the facilities covered in paragraph 1 must inform the Ministry of Industry, Commerce and Craftsmanship, ENEL and the technical division of the manufacturing tax office with jurisdiction in their territory.

3. Surplus electrical energy produced by the facilities referred to in this Article refers is ceded to ENEL and to the production and distribution companies referred to in Article 4, N° 8 of the Law N° 1643 of 6 December 1962, modified by Article 18 of the Law N° 308 of 29 May 1982.

4. The transfer, exchange or production for third parties and the transmission of electrical energy produced by the facilities referred to in the present article are regulated by special agreements with ENEL conforming to a standard agreement approved by the Minister of Industry, Commerce and Craftsmanship, having consulted the regions, which will consider the necessary coordination of the electric sector plans carried out in the various regions.

5. Prices related to transfers, production for ENEL's account, transmission the parameters related to exchanges shall be stipulated by the CIP within 180 days from the effective date of this law, and shall be updated at least every two years, setting prices and parameters that will encourage the development of electrical energy production obtained from the energy sources covered under paragraph 1. In the case of plants that utilize energy sources assimilated to renewable sources, the CIP shall also define the general technical conditions for assimilability.

6. Article 4 of Law N° 308 of 29 May 1982 is repealed.

BEST AVAILABLE DOCUMENT

7. For purposes of the application of the rules in Articles 2 and 3 of the Law N° 940 of 31 October 1966, plants producing electrical energy from renewable and assimilated sources according to the regulations in force with a capacity no greater than 20 kW are to be exempt from payment of the tax and from the category of electrical works, if such plants are operated separately from the public system.

ARTICLE 23.

{Circulation of electrical energy produced by electrical energy production plants using renewable and assimilated sources}

1. Electrical energy produced by the plants to which Article 22 refers, except for uses provided in the third paragraph of N° 6 of Article 4 of Law N° 1643 of 6 December 1962, as replaced by paragraph 1 of Article 20, may be freely used inside consortia and consortium corporations among companies and, among the said companies, area consortia and industrial development nuclei as referred to in the single text of the law on participation in the South, approved by Presidential decree N° 218 of 6 March 1978, specialized firms of local government organizations and concessionaire public service companies, limited to the requirements of self-production, or firms covered under royal decree of N° 2578 of 15 October 1925, providing: "Approval of the single text of the law on direct assumption of public services on the part of towns and provinces", after authorization from the Minister of Industry, Commerce and Craftsmanship which may be issued based on the criteria of economic validity and evaluation of the production requirements.

2. Whenever the heat produced in co-generation is transferred to public heating systems, the pertinent agreements must be stipulated on the basis of a standard agreement type approved by the Minister of Industry, Commerce and Craftsmanship, having consulted the Regions.

3. The CIP shall determine the ceiling prices for the heat produced in cogeneration that is transferred according to the provisions of paragraph 2, considering fuel costs and the type and characteristics of the consumers.....

...This law, bearing the seal of the State, will be inserted into the Official Collection of the regulatory acts of the Italian Republic. It becomes obligatory on anyone who has the duty of observing it and of having it observed as a law of the State.

Done in Rome, on 9 January 1991

COSSIGA

Andreotti, President of the Council of Ministers

Battaglia, Minister of Industry, Commerce and

BEST AVAILABLE DOCUMENT

Craftsmanship

Approved, the Keeper of the Seals, Vassalli

BEST AVAILABLE DOCUMENT

TAB 7

Mexico:

- **Electrical Energy Public Service Law**
- **Regulations of the Electric Power Public Service Law**

ELECTRICAL ENERGY PUBLIC SERVICE LAW

(Published in the "Official Gazette" of December 22, 1975).

Presidency of the Republic.

LUIS ECHEVERRIA ALVAREZ, Constitutional President of the United States of Mexico, to its inhabitants, be it known:

That (unintelligible) Congress of the Union, the following has been directed to me:

DECREE:

"The Congress of the United States of Mexico, Decrees:

ELECTRICAL ENERGY PUBLIC SERVICE LAW

CHAPTER I

General Resolutions

ARTICLE 1. It is the exclusive responsibility of the Nation to generate, conduct, transform, distribute, and supply electrical energy which has as its purpose the provision of public service, in the terms of Article 27 of the Constitution. In this realm, concessions to private persons shall not be granted and the Nation shall avail itself of the assets and material resources which may be necessary for said purposes through the Federal Electricity Commission.

ARTICLE 2. All acts related to the public electrical energy service are of the public order.

Reprinted for reforms in the "Official Gazette" of December 27, 1983, and to suppress the foot of leaf "D". (Remittance number 1 of 1984).

ARTICLE 3. The self-supply of electrical energy to satisfy private interests, individually considered, is not considered public service.

ARTICLE 4. For the purposes of this Law, the provision of public electrical energy service includes:

I. The planning of the national electrical system;

II. The generation, conduction, transformation, distribution, and sale of electrical energy, and;

III. The realization of all projects, installations, and work required for the planning, execution, operation, and maintenance of the national electrical system.

BEST AVAILABLE DOCUMENT

ARTICLE 5. (Reformed by the sole article of the decree of December 15, 1983, published in the "Official Gazette" of the 27th day of that same month and year, and which took effect on the following day, to read as follows):

ARTICLE 5. The Secretariat of Energy, Mines, and Parastatal Industry shall dictate, in accordance with national energy policy, the arrangements regarding the public provision of electrical energy, which must be complied with and observed by the Federal Electricity Commission and by all physical or moral persons who participate in the production process.

ARTICLE 6. (Reformed by the sole article of the decree of December 15, 1983, published in the "Official Gazette" of the 27th day of the same month and year, and which took effect the following day, to read as follows):

ARTICLE 6: For the purposes of the preceding article, the Secretariat of Energy, Mines, and Parastatal Industry shall (illegible), the programs which the Federal Electricity Commission may submit for consideration, in relation to the acts foreseen in Article 4. All technical aspects related to the generation, transmission, and distribution of electrical energy shall be the exclusive responsibility of the Federal Electricity Commission.

CHAPTER II

Of the organ responsible for the provision of public electrical energy service

ARTICLE 7. The Federal Electricity Commission shall be in charge of the provision of public electrical energy service that is the responsibility of the Nation. The Federal Electricity Commission shall assume the responsibility for carrying out all activities to which Article 4 refers.

ARTICLE 8. The Federal Electricity Commission is a decentralized public organ with juridical personality and its own patrimony.

ARTICLE 9. The Federal Electricity Commission has as its purpose:

I. To provide public electrical energy service as described by Article 4 and in accordance with Article 5;

II. (Reformed by the SOLE article of the decree of December 15, 1983, published in the "Official Gazette" of the 27th day of the same month and year, which took effect the following day, to read as follows):

II. To propose to the Secretariat of Energy, Mines, and Parastatal Industry the programs to which Article 6 refers;

BEST AVAILABLE DOCUMENT

III. To import and export, exclusively, electrical energy;

IV. To formulate and promote to the Federal Executive the programs for operation, investment, and financing which, in the short, medium, or long term, may be required for the provision of public electrical energy service;

V. To promote scientific research and national technology in the field of electricity;

VI. To promote the development and national manufacture of equipment and materials which can be utilized in the public electrical energy service;

VII. To celebrate agreements or contracts with Governments of the Federated Entities and Municipal Governments or with public and private entities or physical persons, for the realization of acts related to the provision of public electrical energy service;

Reprinted for reforms in the "Official Gazette" of December 27, 1983, and to suppress the foot of leaf "C". (Remittance number 1 of 1984).

VIII. To carry out all operations, to take all actions, and to celebrate all contracts as may be necessary for the achievement of its purpose; and

IX. All others which may be set forth by this law and its regulations.

ARTICLE 10. (Reformed by the sole article of the decree of December 15, 1983, published in the "Official Gazette" of the 27th day of the same month and year, and which took effect the following day, to read as follows):

ARTICLE 10. The Federal Electricity Commission shall be governed by a Government Council formed by the Secretaries of Treasury and Public Credit, of Commerce and Industrial Development, of Agriculture and Hydraulic Resources, of Programming and Budget, and of Energy, Mines, and Parastatal Industry, who shall preside. The Director General of Mexican Petroleum and three representatives of the unionized electrician plant workers, who shall be responsible for the areas of planning, operation, and construction.

The members of the Government Council shall name their own alternates. The Government Council shall designate a secretary from the Council.

Oversight of the Organ shall be entrusted to a Council composed of three members, with their corresponding alternates, to be appointed and freely removed by the incumbents in the Secretariats of the Comptroller General of the Federation and of Energy, Mines, and Parastatal Industry, as well as by a representative designated by the Government Council.

BEST AVAILABLE DOCUMENT

The Oversight Council shall be coordinated by the representative of the Secretariat of the Comptroller General of the Federation and shall have the broadest of powers to examine all documentation related to the management of the Entity, as well as to perform all other acts as may be required for the adequate fulfillment of its functions, without prejudice to the powers assigned by the applicable regulations to the Dependencies of the Public Federal Administration in their respective spheres of competence, in the fields of control, oversight, and evaluation of Parastatal Entities.

The Oversight Council Coordinator shall have the right to attend, with voice, the meetings of the Government Council of the Federal Electricity Commission.

ARTICLE 11. The Government Council shall hold valid sessions and its decisions shall be obligatory when the majority of its members are present. Decisions shall be made by a majority of votes. In the event of a tie, the President shall have the determining vote.

ARTICLE 12. The Government Council shall:

I. Approve, respectively, the proposed annual rate plan and the proposed annual expenditure budget;

At its discretion, the Council may approve proposed triennial or five-year rate plans and expenditure budgets;

II. Approve, respectively, the patrimonial and annual financial status;

III. (Reformed by the SOLE article of the Decree of December 15, 1983, published in the "Official Gazette" of the 27th day of the same month and year, which took effect the following day, to read as follows):

III. Approve, respectively, the programs which must be subjected to authorization by the Secretariat of Energy, Mines, and Parastatal Industry, as described by Article 6;

IV. Approve, respectively, the internal regulations of the organization and the proposed functional structure and its eventual modifications, or of the organizational systems of the Federal Electricity Commission, as may be proposed by the Director General;

V. Designate the Directors or Managers of the various areas of activity, at the suggestion of the Director General;

VI. (Reformed by the SOLE article of the Decree of December 15, 1983, published in the "Official Gazette" of the 27th day of the same month and year, and which took effect the following day, to read as follows):

BEST AVAILABLE DOCUMENT

VI. Agree upon proposed rate adjustments, which should be formulated in accordance with the patrimonial and financial state of the Organization;

VII. Approve, as needed, the proposal for rate restructuring;

VIII. Approve, respectively, the program for training, education, and development of human resources as proposed by the Director General;

IX. Remain informed of the petitions which may be formulated by the unionized workers of the institution as regards the collective employment contract, keeping in mind the financial situation of the Federal Electricity Commission;

Reprinted for the second time for Reforms in the "Official Gazette" of December 31, 1986. (Remittance number 1 of 1987).

X. Resolve any matter which may be submitted for its information by any of its members or the Director General; and

XI. Ensure compliance with all legal orders which govern the Federal Electricity Commission;

XII. (Created or added by the twenty-first article of the law that establishes, reforms, adds, and repeals diverse fiscal regulations, published in "Official Gazette" of December 31, 1986, which took effect January 1, 1987, to read as follows):

XII. To oversee, supervise, and ensure that the contributions made by the Federal Government derived from substitution of debts of the Organization are destined to the purpose established in this Law".

ARTICLE 13. The patrimony of the Federal Electricity Commission includes:

I. The rights, movable and immovable goods to which it holds title to date, which are included, and which it may in future acquire by any title;

II. The rights to the natural resources which it may be assigned by the Federal Executive, as necessary for the fulfillment of its purpose;

III. The fruits it may obtain from its assets and the net operating result;

IV. The product of the taxes and rights which are specifically assigned to it in accordance with the respective laws;

V. The income from the sale and provision of scientific and technological services, from advising, and other services; and

BEST AVAILABLE DOCUMENT

VI. The contributions which the Federal Government may award it.

VII. (Created or added by the SOLE article of the Decree of December 15, 1983, published in the "Official Gazette" of the 27th day of the same month and year, and which took effect the following day, to read as follows):

VII. The contributions from the governments of the federative entities, municipalities, and beneficiaries of the public electrical energy service for the carrying out of specific works, augmentation, or modification of the existing ones, when requested by these entities.

The respective regulation shall establish the cases and the conditions in which the requestors of the service shall be required to pay fees independently of the rates assigned for the sale of electrical energy and in the regulations related to the supply of the same in accordance with the following general guidelines:

a) When several technically feasible solutions exist for the supply of a service, the solution which is least expensive for the user shall be considered, even in cases where the Federal Electricity Commission, for reasons of convenience for the national electrical system, opts to create another alternative;

b) The Federal Electricity Commission may construct lines which exceed the capacity required by the requestor, but the latter shall only be obligated to pay the charge which corresponds to the specific line or charge requested;

c) If in the same zone, requests for service are submitted in groups, the Federal Electricity Commission shall study the possibility of offering a joint solution, in which it would attempt to have part of the specific lines be integrated in a common line. In that case the fee for each requestor shall correspond to the sum of the proportional part of the common line and the cost of the specific line. The proportional part of the common line shall be determined as a function of the charge-length of each application with respect to the sum of the charge-length of all the applications;

d) Improvements to the infrastructure required for the provision of individual service shall be exempt from payment or fees when the distance between the post or meter of the closest existing low tension net to the requestor's installations is less than two hundred meters;

e) Once the user has accepted the respective estimate in cases where the formulation of an estimate is required, the corresponding agreement shall be drawn up in accordance with the model approved by the Secretariat of Energy, Mines, and Parastatal Industry and in which shall be specified the service to be provided, the time period for the completion of the necessary work,

BEST AVAILABLE DOCUMENT

the fee to be charged, and the form of payment of the fee;

f) Electrification project for rural communities that are carried out with the collaboration of the governments of the federative entities shall be subjected to the programs and budgets previously approved and to the regulations that may be applicable based on the coordination agreements which may be established;

g) The periodic payments to be made for fee payment shall be approved by the Secretariat of Energy, Mines, and Parastatal Industry and may be revised by request of the Federal Electricity Commission, the State governments, and the respective municipalities.

Reprinted for reforms in the "Official Gazette" of December 27, 1983, and to suppress the foot of leaf "B". (Remittance number 1 of 1984).

ARTICLE 14. The President of the Republic shall designate the Director General, who shall represent the Organization with the following obligations and powers:

I. To comply with the programs referred to by Articles 4, 5, and 6 of this law.

II. Power to carry out acts of administration as described by the second paragraph of article 2554 of the Civil Code for the Federal District in common material and for the entire Republic in federal material.

III. General power for disputes and collection, with all the general faculties as well as with the special faculties as may be required in accordance with the law. Power or special clause as described by the first paragraph of article 2554 of the cited Civil Code, except the power to absolve positions. He shall be empowered as well to desist from protection;

IV. Powers for acts of ownership, in accordance with the terms agreed upon by the Government Council;

V. Powers to sign and award credit titles in accordance with the terms of article 9 of the General Law of Titles and Credit Operations;

VI. (Reformed by the SOLE article of the Decree of December 15, 1983, published in the "Official Gazette" of the same month and year, and which took effect the following day, to read as follows):

VI. To award general or special powers, to authorize those to whom the powers are granted to absolve positions and exercise his mandate before persons and authorities, including the performance of administrative acts with regard to labor matters, delegating his powers of legal representation so that in the name of the Organization they may appear at reconciliation, demand, and

BEST AVAILABLE DOCUMENT

exception hearings and other labor proceedings and trials; as well as to bring suit against, grant pardon by the offended party, desist from the judgment of protection, and to revoke said powers.

VII. To execute the resolutions of the Government Council;

VIII. To submit to the Government Council the projects, studies, proposals, and programs referred to by sections I, II, III, IV, VI, VII, and VIII of article 12;

IX. To name the trusted personnel (senior personnel) of the Organization for positions not expressly reserved to the Government Council;

X. To resolve matters not reserved to the Government Council;

XI. To attend meetings of the Government Council, with voice; and

XII. All others which the Government Council may decide to award him.

ARTICLE 15. The internal regulations of the organization shall establish the functional areas or systems of organization and the powers and obligations of their directors.

BEST AVAILABLE DOCUMENT

CHAPTER III

On the participation and training of workers

ARTICLE 16.-- Electrical workers shall participate in the organization and operation of the Federal Committee on Electricity in order to increase productivity, the social and professional awareness of workers and technicians, as well as to make the best use possible of the human, technical, material and financial resources of the institution.

ARTICLE 17.-- Within the purview of the aforementioned article, joint consulting committees on industrial operation are created, which shall operate in accordance with the following rules:

I.-- They shall be composed in each functional structure or organizational system of a representative of the Federal Committee on Electricity and a representative of the workers;

II.-- Preferably, they shall study the problems related to the development and training of the workers, productivity, responsibility and safety in the workplace; and

III.-- They shall have at their disposal all the institutional information and facilities they may require in their task.

ARTICLE 18.-- The operation of the Joint Committees on Industrial Operation shall be governed by their respective bylaws.

Reprinted because of amendments in the "Official Journal" of December 27, 1983, and to delete footnote "C".- (Remittance Number 1 of 1984).

BEST AVAILABLE DOCUMENT

ARTICLE 19.-- The Federal Committee on Electricity shall promote the technical development and professional training of its workers, in order to improve their skills, productivity, responsibility and safety in the workplace.

CHAPTER IV

On Physical Works and Facilities

ARTICLE 20.-- (Amended by the sole article of the decree of December 15, 1983, published in the "Official Journal" of December 27, 1983, in force on the following day, to remain as follows):

ARTICLE 20.-- The physical works and facilities necessary for the rendering of the electric power public service, shall be bound by the specifications issued by the Federal Committee on Electricity and approved by the Semi-state Secretariat of Energy, Mining and Industry, and by the periodical inspection of said institution.

ARTICLE 21.-- The Federal Committee on Electricity shall maintain its facilities in an adequate manner for the rendering of the electric power public service, in accordance with continuity, efficiency and safety standards.

ARTICLE 22.-- In order to carry out the physical works and installations necessary for the rendering of the electric energy public service, the Federal Committee on Electricity shall:

I.-- As far as its technological development allows, implement the makeup of its own technical personnel;

II.-- Tend to the standardization of equipment and accessories;

III.-- Preferably stock up on national products manufactured by decentralized institutions, state participation companies or private companies.

ARTICLE 23.-- For the acquisition or use of real estate intended for the rendering of the electric power public service, the expropriation, temporary, total or partial occupation, or the limitation of the rights of fee simple ownership, if applicable, shall be in order with the prior statement of public benefit issued in accordance with the respective statutes. The constitution of easement shall be governed by the provisions ot the Federal order Civil Code.

When the real property is owned by the Federation, the states or the city councils, the Federal Committee on Electricity shall submit the applications legally required.

ARTICLE 24.-- The Federal Committee on Electricity may carry out in the streets, roadways, gardens, squares and other public

BEST AVAILABLE DOCUMENT

places, the necessary works for the installation, maintenance and removal of aerial and underground lines, as well as of equipment intended for the service. These works shall be carried out following appropriate safety measures and in such a manner as not to obstruct, unless it is inevitable, the use of the aforementioned places. Upon completion of said works, the Federal Committee on Electricity shall make the pertinent repairs.

CHAPTER V

On the Supply of Electric Power

ARTICLE 25.-- (Amended by the sole article of the decree of December 15, 1983, published in the "Official Journal" of December 27, 1983, in force on the following day to remain as follows):

ARTICLE 25.-- The Federal Committee on Electricity shall supply electric power to anyone requesting it, unless there is a technical obstacle or financial reasons to do so, without establishing any kind of preference within each rate classification.

The bylaws shall determine the requisites that the person requesting the service must meet, and shall set the appointed dates to enter into the contract and set up the connection of the services by the Committee.

ARTICLE 26.-- Interruption of the electric power supply shall take place in the following cases:

I.-- Due to lack of timely payment for the electric power supply during a normal billing period;

II.-- When the use of electric power is made through installations altering or preventing the normal operation of the control or measuring instruments;

Reprinted because of amendments in the "Official Journal" of December 27, 1983, and to delete footnote "D".- (Remittance Number 1 of 1984).

BEST AVAILABLE DOCUMENT

III.-- When the installations of the user do not comply with the regulatory technical standards; and

IV.-- When the use of the electric power is found to be under conditions violating the provisions of the respective contract.

ARTICLE 27.-- The Federal Committee on Electricity shall not incur liability for electric power service interruptions arising from:

I.-- An act of God or unavoidable accident;

II.-- The performance of maintenance works, normal repairs, extension or modification of its facilities; and

III.-- Bad workmanship in the user's facilities.

In the cases provided for in subparagraph II, the Federal Committee on Electricity shall report the interruption of the service to the affected users under the terms set forth by the bylaws of this statute.

ARTICLE 28.-- (Amended by the SOLE article of the decree of December 15, 1983, published in the "Official Journal" of December 27, 1983, in force on the following day, to remain as follows):

ARTICLE 28.-- It is the responsibility of the person requesting the service to carry out, at his own expense and responsibility, the works and installations intended for the use of electric power, which shall meet the technical and safety requisites provided for in the bylaws.

Before the execution of said works and installations, the pertinent projects must be drawn up in accordance with the guidelines and standards established by the Secretariat of Commerce and Industrial Promotion. Without detriment to the powers of said Secretariat to verify compliance with the established requisites, the approval of the Secretariat shall only be required for electrical installations for industries, high-voltage services, supply in places of public assembly, buildings intended for several users, and in areas considered dangerous, in accordance with the aforementioned rules.

NOTE.- PAGES 12 bis and 12 bis 1 ARE DELETED, THE FOLLOWING PAGE IS 12-1

BEST AVAILABLE DOCUMENT

The Federal Committee on Electricity shall only supply electric power after it has verified that the installations referred to in the previous paragraph have been approved by the Secretariat of Commerce and Industrial Promotion.

ARTICLE 29.-- (Amended by the SOLE article of the decree of December 15, 1983, published in the "Official Journal" of December 27, 1983, in force on the following day, to remain as follows):

ARTICLE 29.-- Only the materials, components, devices, machinery, equipment or systems intended for the use of electric power, whatever their origin, whose technical and safety features, as well as their instructions, warnings, and, if applicable, warranties, have been previously approved by the Secretariat of Commerce and Industrial Promotion, shall be sold and used in the Mexican Republic.

ARTICLE 30.-- (Amended by the SOLE article of the decree of December 15, 1983, published in the "Official Journal" of December 27, 1983, in force on the following day, to remain as follows):

ARTICLE 30.-- The sale of electric power shall be governed by the rates approved by the Public Credit and Treasury Department.

The conditions of the rendering of services to be stipulated in the supply contracts and the model agreements thereof, shall be approved by the Secretariat of Commerce and Industrial Promotion, in agreement with the Semi-state Secretariat of Energy, Mining, and Industry. Said forms of contract shall be published in the "Official Journal" of the Federation.

ARTICLE 31.-- (Amended by the SOLE article of the decree of December 15, 1983, published in the "Official Journal" of December 27, 1983, in force on the following day, to remain as follows):

ARTICLE 31.-- The Public Credit and Treasury Department, in agreement with the Secretariats of Programming and Budget, and of Commerce and Industrial Promotion, with the participation of the Semi-state Secretariat of Energy, Mining and Industry, and as a result of a proposal made by the Federal Committee on Electricity, shall set the rates, their adjustment or rescheduling, in such a way that they tend to cover the financial needs and the extension requirements of the public service, without failing to consider the criteria regarding a fair social distribution of the overhead production costs and the reasonable consumption of energy.

BEST AVAILABLE DOCUMENT

Also, and through the aforementioned procedure, the Public Credit and Treasury Department may set special rates for peak hours, minimum consumption hours or a combination of both.

ARTICLE 32.-- (Amended by the SOLE article of the decree of December 15, 1983, published in the "Official Journal" of December 27, 1983, in force on the following day, to remain as follows):

ARTICLE 32.-- The adjustment, modification and rescheduling of rates shall involve the automatic modification of the supply contracts that may have been entered into.

Rates shall in no case be applicable until they have been published in the "Official Journal" of the Federation and at least in two daily newspapers of nationwide circulation.

ARTICLE 33.-- (Amended by the SOLE article of the decree of December 15, 1983, published in the "Official Journal" of December 27, 1983, in force on the following day, to remain as follows):

ARTICLE 33.-- The users of the electric power public service shall guarantee the obligations they assume in the supply contracts they enter into, through deposits whose amount shall be determined by the supplementary rules of the respective rates. Said deposits shall be furnished and kept in the Federal Committee on Electricity.

The Federal Committee on Electricity may accept securities other than the deposits in cases of well-known, proven creditworthiness of the user and with the prior specific request of the latter.

ARTICLE 34.-- The electric power supply contract shall be terminated:

I.-- Due to the will of the user;

II.-- Due to the change of the nature or characteristics of the contract involving the application of various rates;

III.-- Due to the change of owner or leaseholder of the property, industry or commerce, should they be users; and

IV.-- Due to lack of payment of the debt causing the interruption, within the following fifteen calendar days as of the date the interruption was made.

ARTICLE 35.-- Once the supply contract has been terminated, the Federal Committee on Electricity shall be entitled to apply in its favor the amount of the security in the pertinent ratio. The balance, if applicable, shall be made available to the user.

ARTICLE 36.-- (Amended by the SOLE article of the decree of December 15, 1983, published in the "Official Journal" of December

BEST AVAILABLE DOCUMENT

27, 1983, in force on the following day, to remain as follows):

ARTICLE 36.-- The Semi-state Secretariat of Energy, Mining and Industry, in agreement with the Federal Committee on Electricity, shall grant an electric power self-provision permit aimed at meeting the specific needs of natural or artificial persons individually considered. For these permits to be granted, the indispensable condition shall be the impossibility or the inconvenience of the electric power service supply by the Federal Committee on Electricity. The cases provided for in the following paragraphs of this article are exempted from this condition, as well as the case of power plants exclusively intended for use in emergencies caused by interruptions in the electric power public service.

The Secretariat shall also grant the pertinent self-provision permits when the following requisites are met:

a) That with the generation of the self-provision plant the efficiency of transformation of primary energetic products, based on the simultaneous production of other secondary energetic products, or on the use of heat sources derived from industrial processes;

b) That the process used in the generation of electricity may produce another or other secondary energetic products required to meet the needs of the user, such as steam, or use energetic products obtained during some industrial process, such as blast furnace gas; and that the electricity is intended to meet the specific needs of natural or artificial persons, individually considered, the surplus being placed at the disposal of the Federal Committee on Electricity under the terms of subparagraph d) of this article;

c) That the works and installations for the production of electric power are carried out and operated in accordance with the technical specifications issued by the Semi-state Secretariat of Energy, Mining and Industry, following the proposals of the Federal Committee on Electricity;

d) That the person requesting the permit agrees to grant the necessary facilities to the Federal Committee on Electricity, in order that the latter may use the surplus electricity that may result after the user has met his self-provision needs, as long as this can be used by said institution for the purposes constituting its object, in adequate technical and economic conditions, and without detriment to or interference with the production processes of the permit holder, in accordance with the studies and programs approved to that effect.

In the aforementioned agreements entered into by the Federal Committee on Electricity and the permit seekers, the pertinent payment for the supply of the surplus electricity shall be agreed upon;

BEST AVAILABLE DOCUMENT

The aforementioned agreements shall be submitted to the Secretariat, in each case, for approval. The Secretariat shall also monitor the exact compliance of said agreements by both parties.

ARTICLE 37.-- The holders of permits granted based on the previous article shall be bound to contribute, to the extent of their possibilities, electric power for the public service, when, for reasons of force majeure or an unavoidable accident, the public service is interrupted or restricted and only for the time the interruption or restriction last.

ARTICLE 38.-- The permits referred to in article 36 shall have an indefinite duration as long as the purposes for which they were granted, as well as the public convenience to carry them out, remain and the applicable statutory regulations are complied with. These permits may not be transferred or exploited either totally or partially, or for valuable consideration or for free.

ARTICLE 39.-- (Amended by the SOLE article of the decree of December 15, 1983, published in the "Official Journal" of December 27, 1983, in force on the following day, to remain as follows):

ARTICLE 39.-- The Semi-state Secretariat of Energy, Mining and Industry shall inspect and monitor all works or installations intended for the self-provision of electric power.

BEST AVAILABLE DOCUMENT

OF ELECTRIC POWER

Sanctions

ART. 40 -- (Reformed in its first paragraph by the ONLY article of the decree of December 15, 1983, published in the "Diario Oficial" the 27th of the same month and year, in effect the next day to remain as follows):

ART. 40. - With the exceptions referred to in article 21, second paragraph of the Political Constitution of the United States of Mexico, without detriment to the penalties that correspond to the resulting offence or offenses, there will be administrative sanctions with a penalty of up to three times the value of the electrical power consumed, sold or resold beginning on the date when the offence was committed in the cases referred to in Subparragraphs I and V. In the case of the offenses foreseen in subparragraph VI, the penalty will be three times the general minimum daily wage in effect for the Distrito Federal for each of the plant's kilowatt's capacity to self-supply. In the case of Subparragraph VII, the penalty will be from two to one hundred times de value of said minimum salary.

I. - To whomever shall, without authorization connect his/her private electrical power lines to the general lines of the Federal Power Commission or to another private line fed by said lines;

II.- To the user consuming electrical power by installations which alter or obstruct the normal performance of the measuring instruments or the control of the electrical power supply;

III.-To whomever shall consume electrical power without having entered into a respective contract;

IV.- To whomever shall utilize electrical power in a way or quantity not authorized by their supply contract;

V.- (Reformed by the ONLY Article of the Decree of December 15, 1983, published in the "Diario Oficial" on the 27th of that same month and year, in effect the next day, to remain as follows):

V. To whomever shall sell or resell electrical power;

VI.- To whomever shall install self-supplying plants without the authorizations referred to in article 36 of this law; and

VII.- To whomever shall incur in any other offence to the dispositions of this law or its regulations.

N. del M.- The following paragraphs were created or added by the ONLY article of the decree of December 15 1983, published in the "Diario Oficial" on the 27th of the same month and year, in effect the next day, to remain as follows:

BEST AVAILABLE DOCUMENT

The penalties shall be dictated by the Department of Industrial Commerce and Development (Secretaria de Comercio y Fomento Industrial) , for the offenses committed stated in subparagraphs I to IV inclusive; by the Government's Department of Energy, Mines and Industry, (Secretaria de Energia, Minas e Industria Paraestatal), in the cases of subparragraphs V and VI; by the qualified Department for the offenses referred to in subparragraph VII.

The Goverment's Department of Energy, Mines and Industry will adopt measures conducive to facilitating the regulations of electrical power services in favor of persons of low income who have incurred in the offenses referred to in subparagraphs I to III of this article, so long as they can demonstrate entitlement before the qualified authorities of the legal possession of the respective property, subject to the conditions of the supply of the service in a transitory manner and for the period determined and subject to the procedures required by the case.

ART.-41 The repeat offender will receive a penalty equivalent to double the amount fined the first time. The offender committing contumacy will be penalized for an amount equivalent to tripple that which was applied the first time as well as the temporary or permanent suspension of service.

ART.42.- (Reformed by the ONLY article of the decree of December 15, 1983, published in the "Diario Oficial" on the 27th of that same month and year, in effect the next day, to remain as follows):

ART.42 .- The imposition of the sanctions referred to in articles 40 and 41 does exonerate the user from the obligation to pay for the electrical power consumed improperly, plus a charge for indemnization calculated at a rate equivalent to the monthly charge established for extra charges by the Law of Income of the Federation (Ley de Ingresos de la Federación) for the respective year, for each month or fraction of the debt. The Industrial Department of Commerce and Development in dictating the resolutions referred to in articles 40 and 41, will fix the corresponding amounts calculating or estimating them accordingly; it will determine the payment period, and it will require the debtor to cover it with the corresponding payments (apercibimientos).

CHAPTER VII

ART.-43 (Reformed by the ONLY article of the decree of December 15, 1983, published in the "Diario Oficial" on the 27th of that same month and year, in effect the next day, to remain as follows):

ART.43.- In case of non-conformity to the resolutions of the qualified Department dictated according to this Law and other dispositions derived from it, the interested party may request,

BEST AVAILABLE DOCUMENT

within a 15 working day period following notification, the reconsideration of said resolution before this same Department.

In this recourse all kinds of evidence may be offered, except confessional evidence. The appeal shall be accompanied by documents showing evidence of the law appealed against, and evidence of proof of identification of the appealing party.

A period set by the Department knowing about the recource, of no less than 8 and no more than 30 working days shall be granted to present documents of evidence according to the degree of difficulty which such presentation of documents would entail. It will be the responsibility of the appellant to provide witnesses, certificates and documents. If the appellant fails to provide these within the allotted period of time, the corresponding evidence shall not be taken into account when issuing the respective resolution. In that which is not foreseen in this paragraph, the Federal Code of Civil Proceedings will be applicable supplementarily in relation to the offer, receipt, and presentation of evidence.

The recourses shall be determined by the corresponding officials in agreement with the interior regulation of the respective Agency: or in agreements with delegated authority, except in the case of resolutions imitated by the secretary, in which case, said period of time is guaranteed its value in terms of the Fiscal Code of the Federation. The suspension will continue until the qualified Department decides the recourse. If no guarantee is constituted, the suspension will cease without the need of a declaration and the executory process shall continue.

With respect to the administrative resolutions; the interposition of the recourse will suspend the executory process of the resolution contested upon request from the appellant, and it will have the desired effect until the written communication, or petition of the appellant himself, is definitely solved about said suspension, which will only be granted if the following requirements are met:

I.- The appellant requests it;

II.- The recourse is admitted.

III. The suspension does not carry as consequence the completion or continuation of acts or omissions implying detriment to the social interest or to the public order;

IV.- That harm or injury is not caused to third parties unless payment to them is guaranteed in the case of not obtaining a favorable resolution;

V.- That the carrying out of the resolution causes harm or injury of impossible or difficult repair against the appellant.

BEST AVAILABLE DOCUMENT

CHAPTER VIII

JURISDICTION

ART.44.- (Reformed by the ONLY article of the decree of December 15, 1983, published in the "Diario Oficial" on the 27th of that same month and year, in effect the next day, is to remain as follows):

ART.44.- The application of the present Law and its regulatory dispositions are under the jurisdiction of the Federal Executive by means of the Goverment's Department of Energy, Mines and Industry, the Department of Finance and Public Credit, and the Department of Industrial Commerce and Development, in the terms of this same law.

ART.45.- In all acts, agreements and contracts in which the Federal Power Commission is involved, the leading federal laws will be applicable and the controversies in which it takes part shall fall under the exclusive jurisdiction of the Federation Court (Tribunales de Federación) being excluded from granting the guarantees required for private individuals who are a part of said controversies.

N. del E.- The following Chapter IX entitled "Utilization of Works of Electrical Infrastructure" included in article 46, was created or added by the Twenty First Article of the Law which establishes, reforms, adds and derogates various fiscal dispositions published in the "Diario Oficial" on December 31, 1986, in effect January 1st, 1987, to remain as it now appears:

CHAPTER IX

Utilization of Works of Electrical Infrastructure

ART.46.-The payments which are to be carried out by the Federal Power Commission, the Federal Government (FG) in conformity with the financial rehabilitation agreement, shall have the character of "utilization (aprovechamiento) by which the FG assumed the rights of the respective creditors.

The amount will be determined yearly by the equivalent to the savings of the interests with charge to the results of the organization as a consequence of the aforementioned assumption of debts, and shall be paid in the same installments in which said organization was obligated to cover the debt.

The income obtained by the utilization established in this article, will be geared to compliment the patrimonial cooperations to the organism for investment in new works of electrical infrastructure according to the "Budget Expenditures" authorized by the Department of Budget and Programming (Programación y Presupuesto) and they will be made and will apply according to the

BEST AVAILABLE DOCUMENT

authorized budgets and calendars":

TRANSITORIES:

FIRST ARTICLE .- The present law will be in effect on the day following its publication in the "Diario Oficial" of the Federation.

SECOND ARTICLE.-The Industrial Power law of December 31, 1938 and the Decree establishing the basis for the operation of the Federal Power Commission of January 11, 1949 and the other dispositions opposed to this law are repealed .

Reprinted the 1st time by Reformas in the "Diario Oficial", December 31, 1986. --(Remittance No. 1, 1987).

BEST AVAILABLE DOCUMENT

LAW OF PUBLIC SERVICE

THIRD ARTICLE.- The Federal Power Commission will continue providing electric power services adjusting to the dispositions of the present law.

FOURTH ARTICLE.- Beginning on the date in which this law is put into effect, all the concessions given for supplying public service of electric power from the date in which this law come into effect will no longer be effective.

FIFTH ARTICLE.- In as much as the regulations of this law are dictated, and so long as there is no opposition to its dispositions the regulation of the Law of Electrical Industry of September 11, 1945, as well as the regulatory dispositions dictated in matters of the electrical and service industries, as well as the regulation dispositions dictated in matters of electrical industry, and public service of electric energy will continue to be in effect.

Mexico, D.F. December 8, 1975. Oscar Bravo Santos, D.V.P. - Emilio M. Gónzales Parra, S.P., Fernando Elías Calles, D.S., Salvador Gámiz Fernández, S.S.-(Rúbricas).

In complying with the dispositions of Subparagraph I or article 89 of the Political Constitution of the United States of Mexico, and for its proper publication and observance, I now issue the present Decree in the residence of the Federal Executive Power, in the city of Mexico, Distrito Federal, on the tenth day of December of nineteen hundred and seventy five.- Luis Echeverría Alvarez (Rúbrica).- The Secretary of Industry and Commerce, José Campillos Sainz (Rúbrica).- The Secretary of the National Wealth, Francisco Javier Alejo López. (Rúbrica), The Secretary of Finance and Public Credit, Mario Ramón Beteta.- (Rúbrica).- The Secretary of Hydraulic Resources, Leandro Rovirosa Wade.- The Secretary of the Presidency, Ignacio Ovalle Fernández.- (Rúbrica), The Secretary of the Department of the Interior (Secretario de Gobernación), Mario Moya Palencia.- (Rúbrica)

BEST AVAILABLE DOCUMENT

BEST AVAILABLE DOCUMENT

I. Fifteen percent for commissioners that perform just the operations mentioned in item I of the Tenth Rule, and

II. Five percent for commissioners who, in addition to the operations ...illegible text..., perform those mentioned in item II of the Tenth Rule.

Every year, the National Banking Commission will publish whatever amount is appropriate.

Minimum capital contributions must be totally paid on the corresponding year's last business day, at the latest. The Secretariat for Finance and Public Credit may extend the deadline depending on a corporation's development projects.

In the case of adjustable-capital corporations, the minimum equity will be composed of non-profit-withdrawal shares.

TENTH. Commissioners may only:

I. Receive resources from individuals with the purpose of investing them in credit institutions or investment firms, and

II. Carry out transactions between stock dealer institutions, money exchange firms and credit institutions, and between legal entities and those financial institutions, with the sole purpose of putting them in contact with each other. In order to carry out these transactions, commissioners will have to accredit their technical and administrative experience and capabilities before the Bank of Mexico, in the way determined by the Bank itself. The latter will request the opinion of the Banking and Securities National Commissions.

In carrying out the transactions mentioned in items I and II above, commissionists must comply with the general regulations issued to that effect by the Bank of Mexico.

Likewise, relations between commissioners and credit institutions, stock dealer institutions, investment firms and money exchange firms, as well as with their own customers, will be subject to the applicable laws, these regulations and any other applicable provisions. They will also be subject to the contracts previously approved by the National Banking Commission.

FIFTEENTH. Commissioners may not:

I. Invest the resources of the individuals who hire their services in instruments not offered by the credit institutions or the investment firms;

II. Receive compensation other than that established by the Bank of Mexico;

III. Involve third parties in the fees they receive from stock dealer institutions, money exchange firms, credit institutions or investment firms, and

IV. Pay any commissions, fees or compensation to members of the Board of Directors, Board of Administration, administrators, officials or employees of stock dealer institutions, money exchange firms, credit institutions, investment firms or agents of those investment firms and of the legal entities that they put in contact.

TRANSITIONAL

SINGLE. This Resolution will become effective the day following its publication in the **Official Gazette of the Federation.**

Mexico, Federal District, on the 29th day of May of 1991. Effective Vote. Non Reelection. In the absence of the Secretary, pursuant to article 137 of the Internal Rules and Regulations of the Secretariat for Finance and Public Credit. Signed: the Under Secretary for Finance and Public Credit. Guillermo Ortiz M.

SECRETARIAT FOR POWER, MINING AND SEMI STATE-OWNED INDUSTRY

ENABLING REGULATIONS of the Law of Electric Utilities as Regards the Self-Sufficient Provision of Electric Power

The Document bears a seal with the National Coat of Arms, reading United Mexican States, Presidency of the Republic.

I, **CARLOS SALINAS DE GORTARI**, Constitutional President of the United Mexican States, pursuant to the authority bestowed upon me by item I, article 89 of the Political Constitution of the United Mexican States, and pursuant to the provisions set forth in articles 35, 36, 37, 38, 39 and 40 of the Law of Electric Utilities, and 33 and 34 of the Organic Law of the Federal Public Administration, and

WHEREAS

- The 1989-1994 National Development Plan states that meeting the general demand for electric power is one of the area's national objectives and for that purpose it seeks to promote the investments

BEST AVAILABLE DOCUMENT

required to generate more electricity, so as to ensure that economic and social activities are not hindered by a limited provision thereof;

- The electric system is currently subject to unprecedented strain in order to meet the demand for electric power, since that demand is growing at a greater pace than the infrastructure required to expand the system; for this reason, it is imperative to continue expanding the electric infrastructure within the self-sufficiency schemes made possible by the Law;

- The Law of Electric Utilities states that the self-sufficient provision of electric power to meet private interests, considered on an individual basis, is not considered a public utility;

- The above-mentioned Law enables the Secretariat for Power, Mining and Semi State-Owned Industry to grant, pursuant to the opinion of the Federal Electricity Commission, licenses for the self-sufficient provision of electricity to meet the requirements of individuals or legal entities, considered on an individual basis;

- Some industries base their production on fuel, i.e., secondary sources of power, such as vapor or fuel gases, that make it possible, through certain processes, to produce electricity as a sub product, and in which the efficiency of this joint production is far greater than that of each of those secondary sources of power;

- Under the 1990-1994 National Program to Update the Production of Power, saving and efficiently using power through an integral effort of the entire society is a top priority, and ecological preservation and environmental protection constitute one of the leading priorities.

THEREFORE, I pass the following

ENABLING REGULATIONS OF THE LAW OF ELECTRIC UTILITIES AS REGARDS THE SELF-SUFFICIENT PROVISION THEREOF

ARTICLE 1 - The purpose of these enabling regulations is that of directing the application of the Law of Electric Utilities as regards the self-sufficient provision of electricity.

ARTICLE 2 - The following definitions are hereby adopted for the purposes of these enabling regulations:

I. Law: the Law of Electric Utilities

II. Secretariat: the Secretariat for Power, Mining and Semi State-Owned Industry

III. Commission: the Federal Electricity Commission

IV. Self-Sufficient Provision: the generation of electric power to meet the requirements of individuals and legal entities, considered on an individual basis, including the generation of electric power as a sub product of industrial processes or of the production of other secondary sources of power.

ARTICLE 3 - The application of these Enabling Regulations, the granting of self-sufficient provision licenses, and the inspection and control carried out at every construction site or facility aimed at obtaining the self-sufficient provision of electric power, will fall within the purview of the Secretariat.

ARTICLE 4 - In accordance with the opinion of the Commission, the Secretariat will grant licenses for the self-sufficient provision of electric power to meet the requirements of individuals or legal entities, considered on an individual basis, provided that:

324

a) Either the Commission cannot or does not find it convenient to provide electric power; or

b) There are technical or economic reasons that keep the Commission from ensuring a normal provision, in the opinion of the Secretariat, pursuant to article 25 of the Law.

The Secretariat will decide on the requests for authorizations mentioned in this article, within 60 business days following the date of their submission. If the Secretariat fails to arrive to a decision within that time period, the requested authorization will be deemed granted.

ARTICLE 5 - Authorization is hereby granted to operate power plants to be used exclusively during contingencies resulting from downtimes in the provision of the public-utility service of electricity.

ARTICLE 6 - The Secretariat, in accordance with the opinion of the Commission, will also grant authorizations for the self-sufficient provision of electric power when the requirements of items a) to d) of article 36 of the Law are met. In that event,

BEST AVAILABLE DOCUMENT

BEST AVAILABLE DOCUMENT

electric power will be used in processes in which the production of sources of power, including electric power, is more efficient than in isolated processes.

The Commission's inability or reluctance to provide electric power will not be a prerequisite for the granting of those authorizations.

ARTICLE 7 - For the purposes of these Enabling Regulations, authorizations for the self-sufficient provision of electric power may be requested and obtained by individuals or legal entities that are joint owners of the self-sufficient provision power plant. In that event, licensees may name a common representative, who will be responsible to the Secretariat.

ARTICLE 8 - In order to meet their own requirements, individuals or legal entities, considered on an individual basis, may establish a corporation for the sole purpose of self-sufficiently generating electric power for its partners.

ARTICLE 9 - In their requests for self-sufficient provision authorizations mentioned in articles 4 and 6 of these Enabling Regulations, applicants must include their programs for the provision of primary sources of power. The assessment of those programs by the Secretariat will be a part of the studies undertaken in order to grant such self-sufficient provision authorizations.

In no way will the issuance of those authorizations make the Secretariat or other agencies of the Federal Public Administration responsible for the provision of primary sources of power to licensees.

Applicants will have to take the steps needed to ensure that their electric power requirements are met on a permanent basis independently from the national electric system. Those who require the provision of electric power as backup for self-sufficient provision facilities, will have to request this service directly from the Commission and agree upon the corresponding terms and conditions. These terms and conditions must be in line with the generic ones approved by the Secretariat.

The issuance of self-sufficient provision authorizations does not entail any commitment to entitle licensees to book capacity on the national electric system.

ARTICLE 10 - Self-sufficient provision authorizations may be granted even if generating capabilities exceed user consumption levels.

ARTICLE 11 - As regards the electric power generated under the authorizations referred to in these Enabling Regulations, any surplus electricity in excess of demand will be covered by the applicable agreements reached by the Commission and applicants, pursuant to item d) of article 36 of the Law. Those agreements will specify what compensation will be paid for the provision of the surplus electricity, as well as the way to fund that compensation; they will also include clauses describing the methods adopted for the provision of that surplus electricity.

The agreement will remain in force for as long as the corresponding authorization is not cancelled or has not expired.

ARTICLE 12 - Every applicant will have to comply with the technical regulations issued by the Secretariat as regards constructions and facilities for the self-sufficient provision of power. Those regulations, established on the basis of the information provided by the Commission, must be published in the Official Gazette of the Federation and will be updated on a permanent basis.

ARTICLE 13 - Self-sufficient provision authorizations may be cancelled for any of the following reasons:

a) For the systematic or consistent violation of the provisions set forth in the authorization itself; or

b) For the systematic or consistent violation of the provisions relating to facilities.

ARTICLE 14 - In the event of the death of the holder of a self-sufficient provision authorization, that authorization will be transferred to his legal assignees. If the holder is a legal entity, its termination will cause the authorization to expire.

ARTICLE 15 - Should an interested party have any objections as regards the

file the administrative appeal set forth in article 43 of the Law.

TRANSITIONAL

FIRST - These Enabling Regulations will become effective the day following their publication in the Official Gazette of the Federation.

BEST AVAILABLE DOCUMENT

SECOND - The Secretariat must publish the technical regulations mentioned in article 12 above, within 60 business days following the effective date of these Enabling Regulations.

Done at the Residence of the Federal Executive Branch, in Mexico City, Federal District, on the 29th day of May 1991. Signed: **Carlos Salinas de Gortari.** Signed: the Secretary of Power, Mining and Semi State-Owned Industries, **Fernando Hiriart Balderrama.** Signed: the Secretary of Commerce and Industrial Development, **Jaime Serra Puche.**

SECRETARIAT FOR COMMERCE AND INDUSTRIAL DEVELOPMENT

AGREEMENT establishing normal competitive prices for the sections of the import duty schedule of the Tariff adopted under the General Import Tax Law, as regards Sugar, to be applied during June 1991.

The Document bears a seal with the National Coat of Arms, reading United Mexican States, Secretariat for Commerce and Industrial Development.

The Secretariat for Commerce and Industrial Development, pursuant to article 34 of the Organic Law of the Federal Public Administration, and to article 4 of the Decree reforming the Tariff of the General Import Tax Law, published in the **Official Gazette of the Federation** on 31 January 1991, and in accordance with the opinion of the Secretariat for Finance and Public Credit, hereby passes the following

AGREEMENT ESTABLISHING NORMAL COMPETITIVE PRICES FOR THE SECTIONS OF THE IMPORT DUTY SCHEDULE OF THE TARIFF ADOPTED UNDER THE GENERAL IMPORT TAX LAW, AS REGARDS SUGAR, TO BE APPLIED DURING JUNE 1991.

SINGLE ARTICLE - Normal competitive prices to be applied during June 1991, in U.S. dollars per kilogram, will be as follows:

SECTION OF THE IMPORT DUTY SCHEDULE	NORMAL COMPETITIVE PRICE
1701.11.01	0.251
1701.11.99	0.172
1701.12.01	0.251
1701.12.99	0.172
1701.91.01	0.282
1701.99.01	0.251
1701.99.99	0.282
1702.90.01	0.237

TRANSITIONAL

SINGLE - This agreement will become effective on June 1, 1991.

Mexico, D.F., on the 29th day of May 1991. Pursuant to article 31 of the Internal Rules and Regulations of the Secretariat for Commerce and Industrial Development, signed by **Fernando Sánchez Ugarte**, Under Secretary for Industry and Foreign Investment, in the absence of the Secretary of the Sector and of the Under Secretary for Foreign Commerce.

SECRETARIAT FOR AGRICULTURE AND WATER RESOURCES

BEST AVAILABLE DOCUMENT

328

DECREE declaring that planting, harvesting and industrializing sugar cane is in the public interest and, consequently, those activities will be covered by the provisions set forth in this Decree.

The Document bears a seal with the National Coat of Arms, reading United Mexican States, Presidency of the Republic.

BEST AVAILABLE DOCUMENT

SELF GENERATION / JOINT OWNERSHIP OPINIONS

- OBJECTIVE: To be free to work and to produce on an efficient basis and in a competitive environment for the benefit of electric power users.

- In the past, given the restrictions stemming from article 36 of the Law, and the attitude of the authorities on duty, its growth and modernization were obstructed. (negatives attached).

  - Currently, there is a different attitude as regards the issuance of authorizations required to grow and meet self-provision requirements. There are still, however, some difficulties:

    - Authorizations are only granted provided that the applicant has his own networks

    - The way to deal with surpluses is still largely undefined

  - However, in spite of the regulations dated May 8, whereby it is stated that authorizations will not depend on whether the Federal Electricity Commission (C.F.E.) has capacity or not, this restriction still exists under the Law.

- To be free to grow or to expand in order to serve its users, regardless from whether C.F.E. has capacity or not. To delete that restriction from the Law.

  - The objective is to make the user free so that, based on an economic decision, he may decide to do it by himself, in association with other(s), or by purchasing from the C.F.E.

- Freedom to own or expand his own distribution network to serve his customers.

  - In the event of physical or transit impediments, to have access to the C.F.E. network to meet the requirements of his customers.
  - To define the cost of transmission in a competitive environment.
  - To have the option to enter into "swaps", should this prove beneficial to the system.

- To enable individuals or legal entities to set up private power plants, on an individual basis or under the joint

BEST AVAILABLE DOCUMENT

ownership regime.

- In the event of surpluses, to have already defined and planned the way to deal with them.
  - To apply this to contingencies as well.
  - To purchase surpluses from self-sufficient provision power plants on a preferential basis by CENACE (they would have power available without C.F.E. investment).

- To become very familiar with the structure of the prices for the purchase of surplus electric power from private self-sufficient power plants.

- Uncertainty as regards the availability and competitiveness of fuel.

  - In the past, a corporation was forced to use the kind of fuel that the semi state-owned entity was interested in selling (i.e., there were limitations as regards the utilization of gas, see attached table).

  - Currently, in some zones there is freedom to consume one or the other, whereas in other zones the utilization of gas is subject to restrictions, and this puts some limitations to the idea if investing in more efficient cycles.

- It is important to guarantee the long-term provision of fuel

BEST AVAILABLE DOCUMENT

decided by the self-sufficient producer in a competitive environment.

- As to the environment, there is also uncertainty with regard to ecological regulations.
  - A certain type of facilities was required in the past.
  - Currently, other types of facilities are required, with the result that sums invested in the past cannot be applied to meet new regulations.
  - With some of the types of fuel provided (combustoil) it will hardly be possible to meet the regulations that are planned to be implemented.
- Under the Law, there is a person responsible for the provision of sources of power. However, so far there is no commitment to ensure provision for new projects. (As results from the May 1991 enabling provisions).
  - Recent de-regulation

BEST AVAILABLE DOCUMENT

OFFICIAL DAILY OF THE FEDERATION

Publication of the Constitutional Government of the United Mexican States

May 31, 1993

SECOND PART

MINISTRY OF ENERGY, MINING AND GOVERNMENTAL INDUSTRY

REGULATIONS OF THE ELECTRIC POWER PUBLIC SERVICE LAW

1993

At the side a seal with the National Emblem reading as follows: United Mexican States.- Office of the President of the Republic.

CARLOS SALINAS DE GORTARI, Constitutional President of the United Mexican States, in exercise of the authority vested upon me in Section I of Article 89 of the Political Constitution of the United Mexican States, has deemed convenient to issue the following:

REGULATIONS OF THE ELECTRIC POWER PUBLIC SERVICE LAW

CHAPTER I

General Provisions

ARTICLE 1. The purpose of these regulations is to regulate the Electric Power Public Service Law as to the rendering of said service, as well as the activities not considered a public service and provided for in the same Law.

ARTICLE 2. For the purposes herein stated, the following shall be understood as:

I.	Commission:	The Electricity Federal Commission (Comisión Federal de Electricidad)
II.	Distribution:	The conveyance of electric power from the transmission delivery points to the user supply points;
III.	Generation:	Production of electric power from energy primary sources, utilizing appropriate systems and equipment.
IV.	Law:	The Electric Power Public Service Law.
V.	Maintenance:	The activities related to preserving works and facilities in adequate working conditions for the rendering of the public service.
VI.	Operation:	The activities carried out by the supplier to generate, transmit, transform and distribute electric power, as well as those related with

BEST AVAILABLE DOCUMENT

	the control and protection of the national electric system.
VII. Ministry:	The Ministry of Energy, Mining and Governmental Industry
VIII. National Electric System:	The facilities for the generation, transmission, transformation, subtransmission, distribution and selling of public service electric power in the country, whether interconnected or not;
IX. Supplier:	The Electricity Federal Commission, and when applicable, the agencies or entities mentioned in the 4th Transitory Article of the Law;
X. Supply:	All actions and work required to supply electric power to every user;
XI. Transformation:	Modification of features of voltage and electric current to adequate them to the requirements for transmission and distribution of electric power;
XII. Transmission:	Conveyance of electric power from generation plants to delivery points for distribution, and
XIII. User:	Corporation or individual making use of the electric power provided by the supplier, once a contract has been signed by the parties.

ARTICLE 3. The Ministry, with the participation of the supplier and the National Commission for Saving Energy (Comisión Nacional para el Ahorro de Energía, CONAE), shall take appropriate measures to promote the rational use of electric power and shall develop campaigns with that purpose, according to the terms of saving energy programs.

ARTICLE 4. Except provisions to the contrary, the periods and terms set forth in these Regulations shall be in calendar days, and will start the day after the facts and circumstances herein provided occur.

ARTICLE 5. The supplier and all individuals mentioned in these Regulations shall provide the Ministry and the pertaining agencies

BEST AVAILABLE DOCUMENT

of the federal public administration, all the information requested in the Law and these Regulations.

CHAPTER II

On Duties and Rights of the Supplier

ARTICLE 6. The supplier may carry out work for rendering a public service only by authorization from the Ministry. Any modification to the relevant programs will be submitted to the authorization of the Ministry.

In the case of work consisting of construction of new generation facilities, said authorization must be granted according to provisions in Article 125, Section III.

All the specific expansion and modification work mentioned in Section VII in Article 13 of the Law and requested by suppliers shall not require any prior authorization from the Ministry.

Electrification works in farming communities and suburban areas carried out with aid from the state government must comply with provisions set forth in the coordination agreements entered into by the states and the Federal government.

ARTICLE 7. The supplier shall take the necessary measures to obtain the required authorizations or permits from the pertaining agencies, in order to import, export or exchange electric power, within the activities related to public service.

The Ministry will authorize said measures in the following cases:

I. Import of electric power:

a) When deemed convenient due to technical or economic reasons;

b) When the cost of importing electric power is less than the cost the supplier has to pay to obtain it;

II. Export of electric power:

a) When domestic consumption is not affected and technically and economically is convenient;

b) When exploitation of natural resources owned by Mexico and a neighboring country is carried out, in whose case the pertaining agreements will be entered into, in accordance with Mexican laws and international treaties;

BEST AVAILABLE DOCUMENT

III. Exchange of electric power with electric power suppliers from other countries, provided the pertaining agreements are executed.

ARTICLE 8. The supplier shall provide monthly reports to the Ministry as to the amount of electric power generated, imported, exported, purchased and sold.

ARTICLE 9. Specifications of works and facilities issued by the supplier to be observed by private parties, must propitiate that the technical requirements implied are satisfied in a cost effective manner, introducing the appropriate state of the art technology. The preparation of said specifications, as well as the process for their approval by the Ministry, must abide by provisions in the Federal Law on Metrology and Standardization.

ARTICLE 10. The supplier shall prepare yearly programs of requirements as to equipment and materials at least for the following five years, and shall take the pertaining measures to procure the required equipment and tools under the best conditions regarding quality, amount, timeliness and price.

ARTICLE 11. The supplier may enter into agreements and contracts with the state and municipal governments, with government owned companies or with private parties, in order to carry out actions related to the rendering of a public service and relevant activities, with the purpose of improving the exploitation of its resources, as well as simplifying and facilitating administrative work related to public service.

ARTICLE 12. Terms and conditions under which requesters of supply must carry out the contributions provided for in Article 13 of the Law, shall be set forth in the pertaining regulations.

CHAPTER III

On Electricity Works for Public Service

ARTICLE 13.- All electrical works required for rendering the public service must abide by the official Mexican standards, and in its case, by the specifications provided by the supplier and approved by the Ministry.

ARTICLE 14. When a work project is carried out by personnel other than the supplier's, said personnel shall comply with the requirements specified in the Mexican official standards. The supplier may agree with the designer of the project for personnel from the supplier to participate in the carrying out of several aspects of the project.

When the supplier deems it convenient, it may request the

BEST AVAILABLE DOCUMENT

necessary help from the pertaining authorities for performing the work.

ARTICLE 15. The supplier may perform all the necessary work in streets, parks, plazas and other public places, to install, maintain or remove overhead or underground lines or equipment for public service, without being held liable for any payment before the pertaining authorities.

For the performance of work in public thoroughfares where right of way may be obstructed in a temporary manner, the supplier must request authorization from the pertaining authorities (except in the case of emergencies), indicating the time it will take to perform the work. Once the work is completed, the supplier will make the necessary repairs, using material similar to the original and according to the terms of the authorization granted.

All work is to be performed adopting the appropriate safety measures and in compliance with the pertaining provisions, trying not to obstruct public use of the aforementioned places, unless this is unavoidable.

CHAPTER IV

On Streetlighting and Land Development Works

ARTICLE 16. The appropriate agency or entity shall be responsible for the construction, operation, maintenance and repair of all works and facilities required for rendering service related to municipal streetlighting, as well as for carrying out the relevant projects and any other related type of work.

The municipal streetlighting service works and facilities will not be part of the supplier's electric power system, and for purposes stated herein, facilities for use of electric power will be equipped as to the relationship between the renderer of the streetlighting service and the supplier.

In order to establish liability limits for the supplier, all terms and conditions, applicable rate or tariff and especially, electric power delivery points, must be precisely determined in the supply contracts entered into by the renderer of the public streetlighting service and the supplier.

Public streetlighting projects and construction must comply, in all pertaining matters, with the Mexican official standards.

ARTICLE 17. The construction of works and facilities part of a certain land development, required for the supply of electric power to the purchasers or users, must abide by the following rules:

BEST AVAILABLE DOCUMENT

I. Land developers shall be responsible for construction of the works;

II. Prior to starting work, they must prove before the supplier that they have obtained permission from the appropriate authorities for the development of the land, and must enclose all drawings of the respective layout in lots.

III. Developers must abide by the Mexican official standards and the supplier's specifications, and shall use only materials and equipment that comply with same;

IV. The installation project and process must be approved by the supplier. A reply is to be made within a period of thirty days after the filing by the interested party of the pertaining documents, and if this is not the case, after thirty days it shall be understood as approved by the supplier.

V. All works and installations are to be carried out under the supervision of the supplier;

VI. Before starting all works and installations, the land developer shall agree with the supplier that once all work has been completed, ownership of same will be transferred and delivered under pertaining formalities to the supplier, who will be held liable for their respective operation and maintenance as of the date of receipt, and

VII. All works and facilities required for public streetlighting service, to be carried out in any case by the land developer in compliance with the authorization granted by the appropriate agency or entity, shall be independent of those mentioned in the preceding sections and shall be delivered by the land developer to the same agency or entity for its operation and maintenance.

CHAPTER V

On Supply and Selling of Electric power

ARTICLE 18. The supplier must offer and maintain service in alternate current, in one, two or three phases, at the high, medium or low tensions available in the area in question, and comply with the following:

I. The frequency must be 60 Hertz, with a tolerance of 0.8% + or -, and

BEST AVAILABLE DOCUMENT

II. The tolerances in the high, medium or low tension voltage must not exceed 10% + or - and must tend to reduce in a progressive manner.

ARTICLE 19. In the event the supplier has two or more tensions available for supply, provisions in Article 12 shall prevail.

ARTICLE 20. Prior compliance of the applicable provisions, the supplier will provide the service to any individual or corporation requesting it, without any preference whatsoever within each tariff rating, except in the case of any technical impediment or economic reasons serving as obstacle. The supply must be provided at the applicable rate, based on information furnished by the user, who will receive the necessary guidance from the supplier.

A technical impediment will exist when supply is required under conditions different to those provided for in Article 18, and the supplier is unable to meet said conditions, and also when the supplier can provide electric power only in a limited manner or with restrictions, or when the term to start the supply exceeds that required by the user.

Economic reasons shall be considered as an impediment to supply when the supplier has to build specific facilities additional to existing facilities, according to regulations referred to in Article 12, and the applicant agrees to pay the supplier for this concept.

ARTICLE 21. When according to programs approved by the Ministry the supplier needs to modify the high or intermediate tension of the supply, it shall notify each user to be affected, at least 180 days before the starting date of the pertaining work. The supplier should also inform the users about the new tension of the supply and the terms and conditions under which said modification is to be carried out.

The supplier shall enter into the respective agreements with each one of the affected users. The following is to be specified in these agreements:

I. The obligation on the part of the supplier to pay a compensation to the user, proportional to the cost of its own substation equipment to be substituted or adapted, due to modifications of tension and utilization time of the equipment.

The amount of said compensation shall be 50% of the cost of the new equipment, if the existing equipment has been in use for five years or less, and 33% if the existing equipment has been in use for 5 to 10 years. The supplier shall be exempt from any obligation to compensate when the user's equipment has been in use for more than 10

BEST AVAILABLE DOCUMENT

years. By mutual agreement, the parties shall determine the cost of the new equipment and compensation shall be made by the supplier through 50% or 33% credits to the pertaining invoices for electric power consumption, until total payment has been made.

The maximum transformation capacity to be compensated shall not exceed the value of the load under contract according to Article 44, based on the commercial transformation capacity, excluding reserve equipment and exceeding capacity.

The definition of the years a substation equipment has been in use, shall be based on the date it was connected to the supply;

II. The additional obligation on the part of the supplier of exempting the user from payment of contributions for the works required to supply in the new tension;

III. The period required to carry out the works in charge of the supplier;

IV. The agreement of the user to the purchase and installation of the equipment according to the new tension in the established period, according to the preceding Section.

V. Conditions under which service will be provided to the user during the transition period, while tension is being modifited, and

VI. The obligation on the part of the user to enter into a new supply agreement, when due to the modification of tension, the applicable rate has to be changed.

ARTICLE 22. When the user refuses to enter into the agreement referred to in the preceding Article or at the end of the specified term it has not installed its new equipment or modified the existing equipment, the supplier shall be authorized to install the necessary transformation equipment and provide supply in low tension, applying the pertaining rate.

ARTICLE 23. In the event it does not have to build specific works, the supplier shall provide the supply within the following periods, in working days, as of the date on which the application is deemed to comply with all requirements:

I. Five days, in towns with more than 10,000 users.

II. Ten days, in towns with 5,000 to 10,000 users.

BEST AVAILABLE DOCUMENT

III. Fifteen days, in towns with less than 5,000 users.

The above mentioned periods shall prevail, provided the user is prepared to receive the supply according to provisions in the pertaining Mexican official standards.

In the event the supplier had to build specific works, either for new supply or because of a request from the user to change the tension of the supply, it shall provide the supply within the period specified by the supplier at the time of the request.

ARTICLE 24. Supply shall be 24 hours a day, except in the event that the supplier and user agree on a specific schedule, based on specifications in the rates, without any modification in the payments.

In places receiving supply from isolated generating units, the schedule shall be adjusted as to availability of generation and economic operation of the units.

ARTICLE 25. The user may request more than one supply in the same real property and the supplier shall be under obligation to provide the supply, provided all requirements and conditions set forth in these Regulations are complied with.

ARTICLE 26. All liability on the part of the supplier ceases precisely at the connection point of its facilities with those of the user. The user shall be responsible for its substation, even though the measurement equipment owned by the supplier is installed on the low tension side of the substation, located in an independent cabinet or booth. The supplier shall control the access to this cabinet or booth.

ARTICLE 27. The supplier shall install the connections, equipment and measuring devices required in accordance with the characteristics of the supply; the user may install all the equipment it deems necessary to verify the measurements made by the supplier, provided they do not interfere with the measurement equipment and devices installed by the latter. Invoicing shall be based on the readings of the measurement equipment and devices installed by the supplier.

The supplier shall install the connections and measurement equipment in low or intermediate tension, on the outside limits of the user's real property, and in high tension, at transmission and subtransmission level, at a maximum distance of five meters inside said real property. When a longer length is required and the supplier has no objections, the user shall pay for the additional cost.

ARTICLE 28. When supply is in intermediate or high tension, the following procedures should be followed:

BEST AVAILABLE DOCUMENT

I. The supplier shall perform all work required for connection of the supply all the way to the outside limits of the user's real property. Construction work shall abide by the regulatory provisions referred to in Article 12.

II. The user shall install the required substation with an adequate capacity to satisfy its needs.

III. The user shall perform all the necessary work inside the real property to receive connections and to enable the supplier to install the pertaining measurement equipment. In the case of compact substations the user shall install an additional cabinet. If conditions inside the substation should hinder installation of an additional cabinet, the user shall build an structure with its fittings to receive and secure the connection as well as the supplier's measurement and protection equipments, according to the supplier's specifications.

IV. Before providing the supply, the supplier must verify that the user's main disconnection device complies with specifications, in order to avoid any hazards in the equipment and the electric system lines. Verification on the part of the supplier does not release the user of any responsibility for installation faults;

V. The supplier shall install the measurement equipment on the low or high tension side of the user's substation. If the measurement equipment had to be installed on the low tension side, the user must perform all the necessary work to house or lodge conductors that should be installed on the substation's low tension side, in the measurement equipment, when it is not located in the substation, and

VI. If measurement is carried out on the low tension side of the user's substation and the user requests measurement on the high tension side, the supplier shall comply with the user's request, provided the latter pays the difference in cost of the respective equipment, as well as the necessary work to modify the installation.

ARTICLE 29. In the case of low tension supply, the following procedures should be followed:

I. The user shall build the necessary structure to receive the connection, in the case of an overhead connection, or perform the necessary work, in the case of an underground connection. The user shall also be in charge of the installation of the structure's conduits all the way to the foundation or panel with its respective conductor,

BEST AVAILABLE DOCUMENT

and

II. The user shall install a base or panel for the measurement equipment to be installed, according to supplier's specifications.

ARTICLE 30. To avoid any malfunctioning the supplier must seal all its equipment, cabinets and measurement instruments. Prior notice to the user, the seals may be removed by the supplier in order to make the necessary adjustments, repairs or inspections required by the equipment. Notice shall not be required when performing measurement readings of maximum demand.

ARTICLE 31. From time to time and prior notice to the user, the supplier shall verify that all settings in the measurement equipment comply with the Mexican official standards for this type of equipment. If settings do not comply with these standards the equipment must be removed and replaced.

When consumption inaccuracies above permissible limits are recorded by the measurement equipment installed by the supplier, and provided there is not alteration or impediment for the normal functioning of said equipment, the following procedures should be followed:

I. Ratios between erroneous and correct values are to be obtained from the verification process of energy measurement equipment, of maximum demand or the determination of the power factor. These ratios will help determine the new values of consumed energy, of maximum demand or power factor. The amount of compensation or payment shall be estimated with the new values, applying the rates in force during the affected period;

II. If at the time of verification it is found that the measurement equipment is not recording the active and/or reactive energy consumed, this shall be determined based on the records obtained prior to the malfunctioning or on the records obtained after correction has been made;

In the case of the application of a measurement constant different to the real constant, or the erroneous application of a rate, energy consumed and not paid for shall be determined applying the real measurement constant to the differences in measurements, or by applying the pertaining rate;

III. The above mentioned adjustments may be applied for a period no longer than two years;

IV. The amount of the adjustment to be made shall be estimated applying the pertaining rates in force during

BEST AVAILABLE DOCUMENT

the period in question. The resulting amount is to be compared with the total amount of bills paid by the user, according to the supplier's records, and payment shall be based on the resulting difference;

V. If the amount of the adjustments made to the bills is less than the amount paid by the user, the supplier shall compensate the user for the amount of energy paid and not consumed. If the amount of adjustments made to the bills is more than the amount paid by the user, the supplier may send an invoice to the user for the amount of energy consumed and not paid.

In both cases the supplier and the user shall agree as to how the compensation or payment is to be made;

VI. The term to pay the compensation or make the payment referred to in this Article, shall be mutually agreed upon by the supplier and the user, and must not be longer than the period covered by the adjustment;

VII. In case of disagreement as to compensation, payment or term, the user may request the Ministry's intervention.

ARTICLE 32. If the user estimates that there are measurement errors above permissible limits in the measurement equipment installed by the supplier, due to faults in the service connection, to the application of a measurement constant other than the real constant and to the erroneous application of a rate, the supplier may be contacted by the user to carry out the pertaining verifications with the user present. In case of differences, provisions in Article 31 shall prevail.

If as a result of the verification it is determined that the measurement equipment is operating within the permissible limits established in the respective Mexican official standard, verification expenses shall be paid by the user, otherwise they shall be paid by the supplier.

ARTICLE 33. The user shall allow access to its real property for the installation, preservation, verification or removal of lines and equipment installed by the supplier to provide the supply, being under obligation not to make any modifications or changes to said lines and equipment.

The supplier shall perform all work required in the works and facilities of its own inside the user's real property, prior notice given to the user in advance, in order to cause the least possible disturbances. Once work has been completed, the supplier shall repair all material damages caused and shall remove all waste.

BEST AVAILABLE DOCUMENT

ARTICLE 34. The user shall be responsible:

I. For damages caused to the supplier and third parties because of faults in its facilities.

II. For direct physical damages to the supplier's works or equipment, inside the user's real property, except in the case of a natural phenomenon or force majeure.

ARTICLE 35. The supplier may interrupt the supply, without requiring to that effect the intervention of any authority:

I. When bills or invoices are not paid during their invoicing period;

II. When use of electric power is credited through installations that change or hinder the normal functioning of the supplier's control and measurement equipment;

III. When the user's installations are not in compliance with official Mexican standards;

IV. When there is confirmation that electric power is being used under conditions violating terms in the pertaining agreement;

V. When electric power is being consumed without having entered into the pertaining agreement; and

VI. When service is connected without authorization from the supplier.

In the cases mentioned in Sections I, III and IV, the supplier shall give notice to the user three days before the date of the power cutoff. The unpaid bills or invoices may be paid during this three-day period.

ARTICLE 36. For power to be reinstated the procedures should be as follows:

I. In cases provided for in the aforementioned article, the user shall pay the authorized reclosing fee, and also:

a) In the case in Section I, pay its debt and request resumption of supply;

b) In the case in Section II, make the necessary repairs to the installation to correct what was changing or hindering the normal functioning of the

BEST AVAILABLE DOCUMENT

supplier's measurement and control equipments, and pay the amount of illegally consumed power as well as the pertaining compensation to the supplier, according to provisions in Article 42 of the Law;

c) In the case in Section III, prove that it has taken the necessary corrective measures and request resumption of supply at the rate set for the specific use of that supply;

d) In the case in Section IV, request resumption of supply at the rate set for the specific use of that supply and, if this is the case, enter into a new agreement;

c) In the case in Section V, enter into the pertaining agreement and pay for illegally consumed power and compensate the supplier, according to provisions in Article 42 of the Law, and

d) In the case in Section VI, request resumption of supply at the agreed rate, and if this is the case, enter into a new supply agreement.

II. Resumption of supply shall be made within the periods mentioned in Article 23.

ARTICLE 37. The supplier is not liable for shutdown of public service in the following cases:

I. If it originates in its system due to acts of God or force majeure, notwithstanding the duration of the shutdown, nor its frequency;

II. If it originates because of failures in the user's installation or because of its deficient operation, and

III. If it originates because of work required for preventive maintenance, expansion or changes in its works and facilities.

ARTICLE 38. When a power shutdown is due to causes provided for in Section III of the preceding Article, the supplier shall provide adequate information to the users through the media in their respective location. It shall give individual notice in the case of: industrial users with high or medium tension services, with more than 1,000 KW under contract; renderers of public services that require electric power as essential input to provide them, and hospitals. In all cases, this notice shall be given no less than forty eight (48) hours before work starts, and it shall include the day, time and duration of the shutdown and also the time at which it will be resumed, clearly indicating the affected

BEST AVAILABLE DOCUMENT

area. If notice is not given the supplier shall be held liable.

ARTICLE 39. The supplier shall try that all work referred to in the preceding Article is performed during the time of day and on the days when electric power consumption decreases, in order for users to be affected the least possible. Also, the duration of the shutdown in the affected area shall not exceed eight (8) hours in a day nor should occur more than twice a month. If the supplier shuts down the service without any prior notice to the users, it shall be held liable for all direct physical damages caused, except in emergency situations where prior notice can not be given because of urgency of work to be performed. Afterwards, the supplier shall inform the users about the reasons for the shutdown.

The amount of damages and payment of same shall be specified in an agreement between the supplier and the user. If an agreement is not reached, the user may request the Ministry's intervention.

ARTICLE 40. In the event of service shutdowns by any reasons other than those mentioned in Article 27 of the Law, the supplier shall credit the user, at the time of issuing the respective invoice, an amount equal to five times the amount of service available if the shutdown had not occurred, and that the consumer would have paid. The basis to estimate said amount shall be the consumption and average price of the previous invoice.

If within normal operation conditions, due to an act or neglect attributable to the supplier, sudden changes should occur in the supply, thus exceeding permissible limits in tension or frequency, and by that reason the user's facilities, equipment or electric appliances should be damaged, the supplier shall be under obligation to repair the direct physical damage caused or to compensate the user for this damage.

In any of the assumptions referred to in this Article, the liability of the supplier due to direct contingent damages to the user because of failures or shutdowns of the supply, shall be restricted to the above mentioned concepts, and shall be fulfilled at the request of the interested party.

In the event that an agreement is not reached between the supplier and the user, the latter may request the Ministry's intervention.

ARTICLE 41. When due to an act of God or force majeure the supplier should lack capacity or sufficient electric power, and for that reason it is forced to shut down, restrict or change the public service, it shall give notice to the users through the largest circulation media. The extent and duration of the shutdown or restriction shall be indicated, as well as the affected area and time and dates when it will occur.

BEST AVAILABLE DOCUMENT

In the event that the shutdown, restriction or change of the public service lasts more than ten days, the supplier shall submit to the Ministry for its approval, the program to be applied in view of the situation. Said program is to be prepared as to cause the least possible inconveniences to the users and shall set forth the criteria to be applied in the assignment of the available power to different destinations and types of users.

ARTICLE 42. The supplier shall answer or take care of all complaints and claims related to the users within a period of ten working days. In the event a complaint or claim is not solved within this period, the user may file a claim before the Ministry or before the legally qualified authorities. If this is the case, the Ministry shall summon the parties to a meeting for them to reach an agreement. If an agreement is not reached, arbitration shall be proposed according to provisions in the Consumer Protection Federal Law, without any detriment to the exercise of rights before the legally qualified authorities.

The Ministry shall take the necessary measures to set up a control for receiving and following up on complaints and claims submitted by the users, and every six months shall publish a report on the matter. When preparing the quality service indicators, the supplier shall take into consideration said report.

ARTICLE 43. The supplier is the only one authorized to sell electric power for public service use, prior execution of the pertaining supply contract and according to the approved rates. The invoicing or billing provisions, measurement equipment, contents of the notice/bill, consumption periods and other concepts related to sale of electric power shall be published in the pertaining manual, prepared for that purpose by the supplier and approved by the Ministry. This manual shall be published in the Official Daily of the Federation.

ARTICLE 44. The supply shall be agreed upon in one, two or three phases, according to availability from the supplier and the user's requirements.

In every case, the load and demand to be agreed upon shall be set forth by the party requesting the supply, based on its power requirements. At the moment of executing an agreement, the above mentioned information shall be included as the load and demand agreed upon, as the case may be.

For the purposes herein stated, the agreed upon load shall be the total amount power in watts of all equipment and devices to be connected by the user to its installations, stating the total amount in kilowatts. Agreed upon demand shall be understood as the maximum power requirements, in kilowatts.

BEST AVAILABLE DOCUMENT

In order to enable the supplier to carry out the related surveys to determine the size of the supply and pertaining installations, and foresee the development of infrastructure in certain area, taking into account increase in demand, at the moment of requesting the supply, the requesting party shall state the load to be agreed upon as well as the demand.

The supplier shall be held liable for supply under the terms and conditions agreed upon, up to the limits of the load under contract. Changes in said load due to the user's electric power larger requirements, shall be made according to provisions in Article 55. The user shall give notice in writing to the supplier about the new load and demand, no later than fifteen (15) days after the date on which changes have occurred on the load and demand agreed upon. The amount of the guarantee shall be adjusted to the new terms of the supply.

The supply may be halted when, according to terms in Section IV in Article 26 of the Law, the user fails to notify in a timely manner about the increase, in its case, of the load and demand agreed upon, and if according to the supplier, said increases may cause or have caused disturbances to public service and its quality and continuity in the area in question, or to the supply to said user.

ARTICLE 45. The formats for supply agreements shall comply with the applicable legal provisions and shall be published in the **Official Daily of the Federation.**

ARTICLE 46. As a guarantee for fulfillment of all obligations in the agreement or contract, the user shall make a security deposit for an amount to be set forth in the respective rate provisions. The deposits are to be made with the supplier.

At the moment of executing an agreement related to a new supply, if the interested party enjoys a good credit rating and prior its request, the supplier may accept guarantees other than deposits, including without limitations: a surety bond issued by a legally authorized Mexican company, a security interest in favor of the supplier in first place and encumbrance of real property in trust.

Prior verification that there is no other pending balance, the guarantee shall be canceled upon termination of the agreement, and in the case of a security deposit, it shall be reimbursed to the user. If there is a pending balance, payment shall be made from the security deposit. The balance on the user may be credited by the supplier to any other supply agreed upon by the interested party or requested later.

If any conflict should arise between the supplier and the user with respect to any amounts owed by the latter, the guarantee shall

BEST AVAILABLE DOCUMENT

remain in force until the parties reach an agreement according to provisions in Article 42, or judgment has been pronounced by the competent authority.

Federal authorities and governmental agencies shall be exempt from granting any guarantee or security interest related to supply agreements. The supplier may agree with the state or municipal authorities or its entities or agencies, on the terms and conditions of guarantees or security interest, as the case may be.

CHAPTER VI

On Rate Provisions

ARTICLE 47. At the request of the supplier, the Ministry of Treasury and Public Credit with participation from the Ministry and the Ministry of Trade and Industrial Development, shall specify the rates for the sale of electric power. Also they shall perform all adjustments, changes or restructuring of same, reflecting changes required by public interest and public service requirements.

Adjustments shall be made only in cases where payments specified for different elements of rates must be changed.

Changes shall be made only in those cases where one of the elements in the rates varies or how the elements intervene.

Restructuring shall be made only in cases where the addition of suppression of one or several rates is required.

ARTICLE 48. The determination of rates will tend to satisfy the financial and expansion needs of public service, promoting at the same time, a rational consumption of power. With that purpose the following is to be observed:

I. Rates shall reflect the economic cost implied in the generation, transmission and distribution of the electric power supplied, including power generated by the supplier and the power it obtains from external suppliers, and shall also take into consideration the expansion requirements of electrical infrastructure, and

II. Rates will be adjusted according to the evolution of economic costs through time, taking into consideration, separately, the generation, transmission and distribution processes, as well as the relevant differences or variations by regional or seasonal factors, changes in productivity or efficiency, and those arising from operational conditions of the system during basic, intermediate or peak demand periods.

BEST AVAILABLE DOCUMENT

Also, the Ministry of Treasury and Public Credit shall take international rates into consideration for a service of similar quality.

The elements referred to in this Article may be explicit or implicit in the rates.

ARTICLE 49. Complying with provisions in the preceding Article, in the structure of rates the above mentioned costs may be distributed among the different users, as deemed convenient, through fixed charges, charges for demand and charges for power consumed, among others.

ARTICLE 50. The following concepts shall be specified in the rates:

I. Types of supply to which they will be applied.

II. High, medium or low tension of supply.

III. Hour schedule of rate, when it is not a 24-hour service.

IV. Charges for demand or consumption, as well as minimum monthly charges.

V. Charges for initial demand agreed upon.

VI. Amount of security deposit.

VII. Locations where the rate will be in force. If locations are not specified, it shall be understood that the rate will be in force all around the country.

VIII. Date on which the rate will become effective, and

IX. Other provisions relevant to the application of the rate.

Rates and supplementary provisions, as the case may be, shall be published in the **Official Daily of the Federation**, and at least in two wide circulation national newspapers. If these requirements are not met, rates may not be applied.

The supplier shall print brochures and pamphlets with the approved rates and shall deliver a copy to whoever requests it, as information about how rates will be applied to supply, and also about their features and payments. Also, the supplier shall provide information and advice to the interested parties about features of the requested supply and applicable rates.

ARTICLE 51. A proposal from the supplier for the determination, adjustment and restructuring of rates shall enclose at least the following information:

BEST AVAILABLE DOCUMENT

I. A survey substantiating the proposal, that shall include:

a) Extent and consequences of the proposal in the supplier's financial statements, in the application or rates or in any other aspect;

b) Financial statements of complementary income, substantiating the proposal;

II. Survey of economic costs of electric power on which the proposal is based;

III. Description of elements included in the proposal;

IV. Estimate of results, considering the adjustment, changes or restructuring.

The proposal shall be approved first by the Supplier's Board of Directors, before submitting it to the Ministry of Treasury and Public Credit. In the examination of the proposal, the Ministry may request additional information from the supplier. If this additional information is not provided within the specified time, the Ministry may issue its decision based on provisions in the Law.

ARTICLE 52. When the supplier, with the approval of the Ministry, makes changes in the tension as a consequence of the development of its systems, and this results in the application of a rate different to the one specified in the agreement, the new rate will be applied as of the date on which the supply is provided at the new tension.

ARTICLE 53. When a supply qualifies for the application of two or more rates, the user may contract services at the general use rate that it considers more convenient. If the user agrees upon a supply at a specific use rate, it may not use electrical power in another manner. In this case installations must be separated to individually contract their respective supplies.

The user undertakes to carry out the separation and will agree with the supplier upon the time required for that purpose. Once this has been completed, each service will be contracted for the application of the respective rate. If the user does not enter into an agreement or does not carry out the separation within the specified time, the supplier may halt the service, abiding by provisions in Article 35.

BEST AVAILABLE DOCUMENT

CHAPTER VII

On Installations for Use of Electric Power

ARTICLE 54. The party requesting the supply shall be held liable and pay for all expenses related to the works and installations assigned to the use of electric power. These works and installations shall comply with the safety and technical requirements specified in the official Mexican standards.

ARTICLE 55. In the preparation of a project for a new installation or for expansion of the existing, the interested party may request advice from the supplier with respect to the possibility of providing the supply and specifications as to tension, connection, breaking capacity of the main release and location and space for the measurement equipment.

ARTICLE 56. In the case of electric installations for high tension service and supply in large public concentration places, a verification unit approved by the Ministry will be required in order to verify in the formats issued for that purpose, that the installation in question and the respective project meet all requirements in the applicable official Mexican standards.

ARTICLE 57. If at the time of verification of installations referred to in the preceding Article, faults are found that could endanger the life of individuals or their property, the user shall be given notice of faults to be corrected, stating the time period for work to be performed, taking into consideration the complexity of the work.

ARTICLE 58. In the cases mentioned in the last two Articles, the supplier shall only provide electric power prior corroboration that installations have been checked by the verification unit referred to in Article 56.

In all other cases, the supplier shall provide supply at the request of the interested party, except when, according to the Law or other provision in force, it is illegal, or a requirement shall be complied with.

ARTICLE 59. The user of the installation and signatory of the supply agreement, shall be responsible for preserving the installation in conditions adequate to receive supply in a safe and permanent manner.

ARTICLE 60. The Ministry is authorized to carry out the inspections provided for in Chapter X.

ARTICLE 61. In the cases of medium or high tension, the user shall install on its own, a substation with the adequate capacity

BEST AVAILABLE DOCUMENT

355

to receive it, being responsible for the maintenance and operation of same. It shall also comply with the supplier's specifications with respect to connection, location of the measurement equipment and breaking capacity of the main release. These aspects shall be checked or verified by the supplier before providing supply.

ARTICLE 62. In the case of low tension supply, the user shall prepare, according to the supplier's specifications, everything related to wiring, connections and devices to enable the supplier to install its measurement equipment, according to provisions in Article 29.

ARTICLE 63. For high or medium tension services, when it is so required, the user may request in advance to the supplier, a bill of exchange or draft to carry out maintenance of installations. The user will carry out maintenance complying with conditions and term of draft, and shall be responsible for this work, using its own personnel or hired personnel, who shall be experienced in this type of work, in order to avoid any risk of accidents as well as damages to third parties.

The user shall pay the supplier the charges approved by the Ministry for the draft or bill of exchange service.

ARTICLE 64. In supplies where the power factor is involved, in the operation of the installation the user shall maintain the power factor with a 90 hundredths and one lag, according to rules issued by the Ministry. The user shall not return active or reactive power to the supplier's lines, except if there is an agreement to that respect. The violation of these rules may warrant the application of sanctions specified in the provisions pertaining to rates, in addition to sanctions imposed according to the Law and these Regulations because of changes made to conditions of supply.

ARTICLE 65. The Ministry, jointly with the competent agencies or entities, shall promote that installations in public concentration places have additional lighting systems in stairs, passages, tunnels and elevators, in the event that emergencies could occur. These lighting systems must be connected to batteries or self-supply plants. In all places where continuous electric power is required, the users must have a self-supply plant specifically assigned to emergencies.

CHAPTER VIII

On Planning and Perspectives of the Electricity Sector

ARTICLE 66. The Commission shall prepare and send to the Ministry for its approval, in compliance with the Law and these Regulations, and when determined by the Ministry, but at least once

BEST AVAILABLE DOCUMENT

a year:

I. A Prospective Document on the trends of the electricity sector of the nation; and

II. The programs of the works to be carried out by the supplier to provide the public service.

The aforementioned document and programs shall be prepared following strict methodological rules and shall be based on the Commission's updated and reliable information, including that from private parties and sent by the Ministry in the report referred to in article 69.

ARTICLE 67. The Prospective Document shall describe and analyze, for a ten year period, the country's estimated electric power requirements, as well as the possible actions to be undertaken by the supplier and the private parties to meet said requirements.

This document shall be used as official information for all the interested parties, regarding the trends of the electricity sector of the country. It shall also be used as the general framework for the work programs referred to in the preceding article. These programs may be defined, modified or adapted by the Commission under different circumstances and abiding by the Law and these Regulations.

ARTICLE 68. The analysis and description of the trends of the electricity sector in the Prospective Document for a certain period shall include:

I. Part of the document shall deal on the future evolution of the electric power demand, including forecasts of basic, intermediate and peak consumption, by geographic regions and for all the country, considering the feasibility of controlling the electric power requirements through relevant rate and managerial policies;

II. Another part shall deal on the existing generation and transmission capacity;

III. Another, on the expansion, addition, rehabilitation, modernization, substitution or interconnection of the required generation and transmission capacity in order to be able to fully and timely meet the country's estimated electric power demand. To the extent possible, and based on the resolutions issued by the Ministry in previous

BEST AVAILABLE DOCUMENT

years, in accordance with that set forth in Article 125, sections III and IV, the estimated generation capacity additions or substitutions to be carried out directly by the Commission, without being of a binding nature for the Ministry or the Commission, shall be mentioned. Similarly, capacity additions or substitutions to be undertaken by private parties in accordance with that set forth by the Law and these Regulations aiming at meeting their own requirements or to make it available to the Commission for public service, shall also be mentioned;

IV. Another sagment of this document shall compare and elaborate on the different options to undertake the actions foreseen in the preceding section

V. Another segment shall include the rational use and energy saving actions and programs to be recommended to the National Energy Saving Commission.

The information in this document shall be extensive and sufficient and shall include, in the case of sections II and III, relevant details regarding region, dates, magnitude and use of existing and future generation and transmission capacity.

ARTICLE 69. The Ministry shall review the Prospective Document and may ask the Commission to offer the clarifications required.

Once these clarifications are heard, the Ministry shall issue an abstract with the more relevant aspects of the document, in order to receive within a five month term, comments from all the parties interested in taking part in the generation capacity substitutions or additions referred to in section III of the preceding article. These comments may include alternate energy saving actions.

The Ministry shall prepare a report on the most relevant information received from private parties and shall send it to the Commission. This entity, based on the best information available, shall issue the pertinent provisions in the Prospective Document to be prepared for the following year, in accordance with that provided for in article 66.

ARTICLE 70. The work programs of the Commission, sent to the Ministry in accordance with article 66, shall include:

I. For each work to be undertaken:

a) Its most relevant characteristics, its budget and pertaining investment program;

BEST AVAILABLE DOCUMENT

b) An economic survey on generation and transmission costs, considering investments, financing and operation expenditures foreseen along the useful life of the relevant project.

Based on this information, the Ministry shall authorize the works to be carried out by the supplier, in accordance with that set forth in article 125, sections II and III, and

c) A survey on alternate energy saving programs, conveying the need or advantages of carrying out the works in question;

II. The programs regarding existing works mentioning the operational, maintenance, expansion and improvement aspects, as well as relevant budgets.

CHAPTER IX

On the Activities not Constituting a Public Service

Title First. Definitions

ARTICLE 71. For the purposes of this chapter, it shall be understood as:

I. Control Area:
Geographic region where the electric system coordinated by the center of regional control of the Commission is located;

II. Backup capacity:
The capacity to be supplied by the Commission to a licensee in order to cover potential faults in the licensee's power plant, as well as partial or total outlets on the same, due to any other reason;

III. Connected load:
Electric power used by the devices connected to the electric power generation systems;

IV. Electric power short term total cost:
Corresponds to the unit cost of electric power from a plant, determined for the period in question, including the cost of fuels used and the operation and maintenance variable costs of the plant, resulting from the generation and transmission of electric power up to the interconnection point;

BEST AVAILABLE DOCUMENT

V. Electric power long term total cost:
Corresponds to the unit cost of electric power from a plant, determined along the total useful life thereof, including investment and financial costs, return on investment, cost of fuels used and the operation and maintenance costs of the plant and infrastructure resulting from the generation and transmission of electric power up to the interconnection point;

VI. Deliverability:
Operational characteristic of a generation unit to increase or decrease generation or to connect or disconnect at the Commission's request;

VII. Load delivery:
Operational control of the national electric system, exercised by the Commission. This entity determines the assignment of generation level of generating units, both owned by the Commission and by the licensees with whom it has entered into agreements for the purchase of electric energy, considering power flows in transmission lines, substations and equipment;

VIII. Availability:
Characteristic of the electric power generating units to produce power at full capacity at the precise moment demanded by load delivery;

IX. Emergency:
Status of the electric system when the service has been shut off or when human life is threatened, or the service or installations are endangered, and requires immediate action;

X. Electric power delivered:
Electric power delivered by a licensee to the Commission and measured at the interconnection point;

XI. Availability factor:
Indicator of the relative availability of a generating unit in a certain period, estimated as the difference between maximum energy to be produced by the unit, and the energy that did not come to be produced due to maintenance activities, faults, a drop in capacity, or any other cause. Said difference is divided by the maximum energy to be produced by the unit;

XII. Interconnection:
Electric connection between two control areas or between the installations of one licensee and a control area;

XIII. External producer:

BEST AVAILABLE DOCUMENT

Holder of a permit to carry out generation activities not constituting a public service, and

XIV. Interconnection point:
Point where the delivery of electric power by a licensee to the Commission is agreed, and where the power delivered is measured.

Title Second. General Provisions

ARTICLE 72. Individual parties may:

I. Generate electric power for any of the following purposes:

a) Sell it to the Commission;
b) Self-consumption as self-supply, cogeneration or small scale production;
c) Its use in emergencies resulting from shutdowns of the electric power public service, and
d) Exports;

II. Import of electric power for the exclusive use of importers thereof.

ARTICLE 73. The exercise of the activities mentioned in the preceding article may include transmission, transformation and delivery of electric power to the relevant beneficiaries, depending on the particular circumstances of each case.

In the pertaining projects, the interested parties shall consider the installations related to said activities for the purposes of construction and operation thereof, without detriment of the possibility of entering into agreements with the Commission, on its case, for the Commission to be able to render the service of transmission of electric power to the licensees.

ARTICLE 74. The electric power with the lowest cost for the Commission and offering optimum stability, quality and safety for the public service, shall be used both in the short run and in the long run in the rendering of the electric power public service.

Managerially, the Ministry shall be the authority responsible for complying with this fundamental principle, therefore it shall exercise the regulating and supervising authorities conferred upon it by the Law and these Regulations.

ARTICLE 75. The Commission shall internally adopt the criteria and regulations required to:

BEST AVAILABLE DOCUMENT

I. Separately know the costs of generation, transmission and distribution and reflecting the use of economic resources in the different activities carried out by the Commission;

II. Perform the analysis of the estimate of generation and transmission costs in order to determine the total cost of electric power, both, in the short and the long run;

III. Know the costs corresponding to generation capacity independently of the costs of energy generated and taken from the estimate of costs, and

IV. Reasonably determine the costs referred to in the preceding sections, in the different geographic regions, installations or periods.

ARTICLE 76. The methodology issued by the Ministry, abiding by the opinion of the Commission, the licensee and the Ministry of Finance and Public Credit, shall be used in order to logically compare the costs of electric power coming from the plants belonging to the Commission or to the licensees providing it or willing to provide it. The Commission and licensees are compelled to use said methodology.

Title Third.- On permits

ARTICLE 77. Self-supply, cogeneration, independent production, small scale production, generation for export and import of electric power for self-supply, all are activities subject to prior permit on the part of the Ministry.

ARTICLE 78. Permits shall have an indefinite duration, except those related to independent production which shall be granted up to a thirty year term.

Prior authorization shall be requested to the Ministry in order to generate electric energy in conditions other than those specified in the permit. The change of destination of the electric power generated shall require a new permit from the Ministry.

ARTICLE 79. When a power plant is owned by several people, the permit will be granted to all the interested parties who shall appoint a common representative before the Ministry, with sufficient authority to act in their behalf. They shall severally assume the responsibility of complying with the Law and these

BEST AVAILABLE DOCUMENT

Regulations as well as with the conditions set forth in the corresponding permit.

ARTICLE 80. The licensee shall adopt the measures necessary to comply with the official Mexican standards and other compulsory specifications and shall assume the risks deriving from any circumstance that could prevent or modify the operation conditions of a power plant and the availability of the electric energy therefrom.

ARTICLE 81. The Ministry, taking care in all cases of the general interest and safety, efficiency and stability of this public service, could grant permits for every one of the activities referred to in this Chapter; to exercise several activities, to authorize the transfer of rights deriving from the permits and to impose the pertaining conditions in accordance with that provided for by the Law and these Regulations.

ARTICLE 82. Permit requests shall be filed at the Ministry in accordance with the formats granted, and shall contain the following data:

I. Name, firm name or trade name and address of the applicant;
II. Subject matter of the permit and term proposed by the applicant, if any;
III. Location of the plant, installation capacity and places where the electric power is to be used;
IV. Energy supply program, including data on its source, type, substitutes and costs, or the use of national waters, on its case;
V. Availability and stability of capacity and associated energy surplus; capacity requirements and complementary energy, as a firm backup or subject to availability, as well as transmission services, and
V. Any other that, in accordance with the subject matter of the permit, are mentioned in the pertaining sections of this Chapter.

ARTICLE 83. Permit applications shall be filed with the following documents:

I. Those evidencing the legal status of the applicant;

II. Project description, in general terms, including the plant characteristics and additional facilities; estimated data on yearly generation and fuel consumption; information regarding the anticipated use of waters, as well as that concerning the compliance with environmental standards and land use, in accordance with that set forth in the pertaining regulations, and

BEST AVAILABLE DOCUMENT

III. Documents evidencing ownership or authorization for the use of the facilities area or report on the legal acts foreseen for this purpose.

ARTICLE 84. The Ministry shall examine the application within ten working days. If admitted to be processed, it shall request the opinion of the Commission based on objective elements on the availability and stability of the project capacity and energy surplus, capacity and backup energy requirements, and the transmission services foreseen in the permit application.

The Commission shall reply within the following thirty working days. This term shall be reduced to ten working days in the cases referred to in Article 111. Said opinion shall not be binding for the Ministry.

ARTICLE 85. When the opinions referred to in the preceding article could imply changes or restrictions to the presentation made in the permit application, this shall be notified to the applicant. The applicant shall file its points of view within the following ten working days.

If comments are made, the Ministry shall hear the applicant and shall decide on the adjustments or adaptations, if any, to be made on the application.

ARTICLE 86. After fulfilling the preceding requirements, the Ministry, on its case, with the knowledge of the applicant, shall request the clarifications and additional elements it may deem convenient. With the purpose of completing the file, the Ministry shall require the applicant the filing of the technical description and justification of the project to be developed, including the elements referred to in section II of article 83.

ARTICLE 87. Once the documents and data referred to in the preceding article are received, the Ministry, within the following thirty working days shall issue a resolution on the legal basis of the application and if approved shall issue the pertaining permit.

ARTICLE 88. Permits shall include at least the following data:

I. Name, firm name or trade name and address of the licensee;

II. Location of the facilities;

~~III. Works program, if any;~~

IV. Beginning and completion dates of the pertaining works, including the date of starting operations and

BEST AVAILABLE DOCUMENT

considering, on its case, the sequential stages;

V. Term of the permit;

VI. Description of facilities;

VII. Authorized activities, and

VIII. Obligations of the holder of the permit, causes and terms of expiration thereof.

ARTICLE 89. Except that set forth in subsection c) of section IV in article 36 of the Law, no permit shall be required for the self-supply of electric power not exceeding 0.5MW, nor for the operation of power plants when they are exclusively assigned for the private use of the owner in emergencies deriving from shutdowns in the electric power public service.

Title Fourth. On the obligations of licensees

ARTICLE 90. Holders of the permits referred to in this chapter are compelled to:

I. Not to directly or indirectly sell, resell or alienate for any title, capacity or electric power, except in those cases authorized by the Law and these Regulations;

II. Notify the Ministry of the date of completion of works within fifteen working days following their completion;

III. Provide, to the possible extent, and through the pertaining payment, the electric power required for public service, when due to force majeure or an act of God, said service is shut down or restricted, and only for the time of said shutdown or restriction;

IV. Comply with the legal and regulatory provisions, as well as with the official Mexican standards, and all the other applicable provisions regarding works and facilities subject matter of the permits;

V. Operate and maintain their installations and equipments in such a way as not to represent any danger for the licensee itself nor for third parties, and

VI. Once the installation operations start, and only for statistical purposes, to notify the Ministry, in the formats set forth by the same, on the type and volume of fuel used, and the amount of electric power generated,

BEST AVAILABLE DOCUMENT

specifying the part used for the licensee's own requirements, and the amount delivered to the Commission or assigned for exports, as well as the imports of electric power made, if any.

Title Fifth. On permits renewal, transfer and annulment

ARTICLE 91. The holders of permits of independent production may request to the Ministry, before the expiration date of their permits, the renewal thereof. For this purpose the Ministry shall hear the opinion of the Commission as set forth in article 84.

ARTICLE 92. When, in the opinion of the Ministry, the licensee evidences having fulfilled all its obligations, and the fact that the conditions giving rise to the granting of said permit still prevail, the renewal application shall be decided favorably.

ARTICLE 93. The rights deriving from a permit granted could be transferred to a third party in an additional manner to the alienation made of the facilities subject matter of the permit in favor of said third party.

ARTICLE 94. The rights deriving from the permit may only be partially or totally transferred prior authorization of the Ministry, which authorization shall be granted if:

I. The licensee and the person willing to buy, request the authorization jointly in writing, and

II. The documents evidencing the legal status of the assignee and proving the fulfillment of all the requirements set forth by the Law and these Regulations, to become a licensee in the pertaining activity or activities, are attached.

ARTICLE 95. In order to issue its decision, the Ministry may request data, documents and clarifications to the applicants whenever it deems convenient. For that purpose, it shall grant a ten working day term for their filing.

ARTICLE 96. In case the Ministry does not find any objections, it shall pass the request in a twenty working day term as of the date of setting up the record. For this purpose the applicant shall file the contract executing the assignment of permit rights and the alienation of the facilities related thereof. Said contract shall include a clause expressly determining that the buyer undertakes all rights and obligations deriving therefrom.

BEST AVAILABLE DOCUMENT

ARTICLE 97. In addition, the rights and obligations deriving from a permit may be transferred, including the corresponding installations, through testamentary estate or through legal award. For this purpose, the interested party shall:

I. File an application indicating the cause thereof;

II. Attach those documents evidencing the legal status of the person exercising the pertaining rights and proving that it fulfills the requirements set forth in the Law and these Regulations to become a licensee, depending on the activities to be carried out, and

III. File the documents evidencing the applicant as assign of the rights.

ARTICLE 98. Once the preceding requirements have been met, and with the opinion of the Commission, if any, the Ministry shall authorize the transfer within a twenty working day term.

ARTICLE 99. Those permits referred to in these Regulations shall expire:

I. Due to their expiration date, on their case;

II. Due to dissolution, or death or disability of the licensee;

III. Due to annulment of the concession or assignment of use of national waters, on its case;

IV. Due to annulment issued by the head of the Ministry under the following assumptions:

a) When the licensee has been repeatedly sanctioned for selling, reselling or alienating capacity or electric power;

b) When transferring the rights deriving from a permit or generating electric power in conditions other than those set forth in the permit without prior authorization of the Ministry;

c) When, due to any reason, the licensee does not comply continuously or in a serious and repeated manner with one of the provisions of the Law, these regulations, the permit conditions, the official Mexican standards, or the applicable technical and operational specifications.
Non compliance is considered repeated when the licensee has incurred for the second time in a

BEST AVAILABLE DOCUMENT

serious fault. Non compliance is considered continuous when it lasts for more than forty five days after being notified by the Ministry that is assumed within this subsection;

V. Due to forfeiture, when the works to generate electric power are not started within a six month term as of the date mentioned in the corresponding permit or the construction thereof is interrupted for an equal term, except in cases of force majeure or an act of God, and

VI. Due to waiver, subject to the terms and conditions set forth in the permit.

ARTICLE 100. The Ministry shall issue the pertaining statement prior hearing of the interested parties, after the assumptions mentioned in sections I to III of the preceding article are known. In the cases referred to in sections IV and V of said article, the procedure below shall be followed:

Once the annulment or expiration cause is known by the Ministry, notice shall be served to the licensee, extending a fifteen working day term, as of the day following the date of notice, in order to file whatever is best for his legal interest and offer the proofs and defense it may have. If there is no answer within the term set forth, the Ministry shall issue the pertaining resolution.

Once the answer of the licensee is received, the Ministry shall open a period for receiving and processing the proofs offered by the licensee and those it may deem convenient, taking into account the nature thereof.

Once the proofs have been heard and taking into consideration the elements provided by the licensee, as well as the information or data deemed pertinent to require from it, or directly collected by the Ministry, it shall issue the pertinent resolution.

Additionally, in said procedure the Federal Code of Civil Procedure shall be applied.

The annulment or expiration resolutions shall be published in the **Official Daily of the Federation** and notice shall be served thereof to the pertaining agencies, on a case basis.

Title Sixth. On Self-Supply

ARTICLE 101. In compliance with that provided for in Article 36, Section I in the Law, self-supply shall be understood as use of electric power for self-consumption purposes:

BEST AVAILABLE DOCUMENT

I. When power originates from plants intended to satisfying the needs of co-owners or partners, and

II. When the licensee agrees to use the electric power generated exclusively within the area authorized by the Ministry.

ARTICLE 102. According to the preceding Article, the inclusion of new individuals in the utilization of power generated by the self-supplier will be accepted:

I. When equity portions, shares or participations are assigned with authorization from the Ministry;

II. When it has been anticipated in the expansion plans and the Ministry has been notified about it, and

III. When expressly authorized by the Ministry.

Title Seventh. On Cogeneration

ARTICLE 103. According to that provided for in Article 36, Section II of the Law, cogeneration shall be understood as:

I. The combined production of electric power and heat or any other type of secondary thermal energy, or both;

II. The direct or indirect production of electric power from thermal energy nonutilized in the processes in question, or

III. The direct or indirect production of electric power using fuels produced in the processes in question.

ARTICLE 104. The following is required to obtain and use a cogeneration permit:

I. The electricity generated is to be assigned to satisfy the needs of the premises related to cogeneration. It shall be understood as such those belonging to the individuals or corporations involved in the basic cogeneration processes, or co-owners of the facilities or partners of the company in question, provided they use said electricity, or that this electricity is available to them or are co-helpers in the process that generates it or makes utilization possible, and

II. That the licensee agrees to make available its power surpluses to the Commission, according to provisions in Title Four of this chapter.

BEST AVAILABLE DOCUMENT

ARTICLE 105. In addition to documents referred to in Article 83, an installation survey must be included with the applications for cogeneration permits. This study must include at least the following documents:

I. A general description of the process.

II. Diagrams of the process, thermal balances and specific fuel requirements;

III. The availability of the expected electrical power and demand surpluses, by typical day, prepared monthly and annually, and

IV. The elements to prove the efficiency levels set forth in the preceding article.

ARTICLE 106. Cogeneration permits may be granted to individuals other than the process operators involved in cogeneration.

In this case, the application must also be signed by the operators. They must include a certified copy of the agreement entered related to this matter or the legal document attesting the incorporation of the company that will undertake the project.

ARTICLE 107. In the case of the preceding article, the process operators involved in cogeneration, shall be jointly and severally responsible with the licensees, for the obligations deriving from the Law, from these Regulations and from the terms and conditions set forth in the respective permits.

Title Eighth . On Independent Production

ARTICLE 108. The generation of electric power from a plant with a capacity higher than 30 MW, to be sold exclusively to the Commission or exported, shall be considered as independent production.

ARTICLE 109. The applicants for independent production permits must be individuals or corporations incorporated according to Mexican law and domiciled in the country.

ARTICLE 110. In the case of power assigned exclusively to the Commission, the project in question must have been previously included in the planning and program pertaining to said body, or be similar.

BEST AVAILABLE DOCUMENT

It shall be understood that the project has been included in the planning and in the Commission's pertaining program or that is similar, in any of the following cases:

I. When the extent of its generation capacity is consistent with provisions in the Prospective Document referred to in Article 66, and

II. When the project satisfies the electric power needs in a manner comparable to some of the technical solutions recommended by the Commission, according to provisions in Article 125, Section II.

Title Ninth. On small scale production.

ARTICLE 111. Small scale production is the generation of electric power for:

I. Selling all the electric power generated to the Commission, in which case the projects will not have a total capacity above 30MW in an area set up by the Ministry;

II. Self-supply of small rural communities or isolated regions lacking electric power service, in which case the projects shall not exceed 1MW, and

III. Export, within the maximum limit of 30MW.

Mexican individuals or companies incorporated in accordance with Mexican law and domiciled in the national territory may request small scale production permits.

ARTICLE 112. In cases of the applications referred to in sections I to III of the preceding article, the licensee can not be the holder in a small scale production region, when its projects add up to a power exceeding 30 MW.

At the time of processing said applications, the Ministry shall mark the limits of the area corresponding to small scale production, taking into account the energy used to generate electric power; the regional characteristics; the Commission infrastructure in the region, if any, in order to know the feasibility of interconnecting to the national electric power system; the licensee's proposals to deliver electric power and other concurring circumstances.

ARTICLE 113. In cases of small rural communities or isolated areas, the applicants shall:

BEST AVAILABLE DOCUMENT

I. Create consumption cooperative societies, joint properties, associations or civil partnerships, or enter into agreements of joint cooperation for self-supply, and

II. Mention the persons to whom the electric power is to be delivered and the conditions thereof for the final consumer, in accordance with that set forth in the pertaining agreements.

ARTICLE 114. In the cases referred to in the preceding article, the following measures shall be adopted:

I. Permits may be requested through civil authorities of the region whenever they had entered into a joint cooperation agreement with the interested parties;

II. At the completion of installations and starting of operations the pertaining notice shall be served to the Ministry, and

III. A general annual report on the operation of the installations shall be rendered to the Ministry.

ARTICLE 115. The Ministry and the Commission shall instruct the licensees regarding the execution, development, operation and maintenance of the pertaining generation projects.

Title Tenth. On Generation of Electric Power for Export

ARTICLE 116. The Ministry shall grant electric power generation permits for export, through cogeneration, independent production and small production projects, that comply with the legal and regulatory provisions applicable, as the case may be.

ARTICLE 117. The applicants of permits for the generation of electric power for export, shall attach the document duly evidencing the purchase agreement of the electricity to be produced or the pertaining letter of intent.

ARTICLE 118. The licensees referred to in the preceding article shall not alienate within the national territory the electric power generated, except when obtaining a permit from the Ministry to change the destination thereof.

ARTICLE 119. The Ministry, at the moment of evaluating the applications referred to in this title, shall consider the electric power supply requirements within the national territory, in the relevant region, and the type of fuel to be used.

BEST AVAILABLE DOCUMENT

Title Eleventh. On the use of Imported electric power

ARTICLE 120. The Ministry may grant permits to buy electric power from the power plants set up abroad through legal acts directly entered into between the electric power supplier and the consumer thereof.

ARTICLE 121. Electric power import permits shall set up the terms and conditions under which the licensee shall request the supply from the Commission, in case its import is ended.

ARTICLE 122. Electric power imported in accordance with that provided for in articles 3o., section IV and 36, section V of the Law, shall be subject to the payment of the import duties set forth by the applicable legislation.

ARTICLE 123. For purposes of this title, the applicants, except in the case they interconnect to the national electric power network, must agree to operate their respective facilities in the country, using their own resources and hired personnel, and must comply with all the applicable legal and regulatory provisions, and with the official Mexican standards.

Title Twelfth. On Bids for the Addition or Substitution of Generation Capacity

ARTICLE 124. All additions or substitutions of generation capacity resulting from the outlook of the electricity sector, shall be made taking advantage of the electric power whose long term total cost is the lowest for the Commission, apart from having optimum stability, quality and safety in the public service.

ARTICLE 125. For the purposes of the preceding article, the following conditions shall be met:

I. Abiding by the Prospective Document referred to in the preceding chapter, the Ministry shall determine from time to time the capacity expansion or substitution required to meet the electric power demand of the country;

II. The Ministry shall analyze the technical solutions and the long term total cost of the electric power from projects recommended by the Commission to cover said capacity expansion or substitution, as if they were projects pertaining to the Commission;

III. The Ministry, based on the solutions recommended by the Commission, may determine the execution and operation of projects by the Commission, whenever:

BEST AVAILABLE DOCUMENT

a) The relevant project anticipates a nuclear plant; or

b) Based on comparisons made of long term total costs of electric power, it is evident the convenience of the Commission taking care of the execution and operation of the project in question. For this purpose, the Ministry shall notify the interested private parties of the project proposed by the Commission, in order to file their suggestions in a sixty day term. After said term, the Ministry may proceed to authorize the Commission for taking care of the project under the mode of execution of works. If the Commission does not evidence compliance with the original forecasts regarding the long term total cost of electric power, the project shall be subject to bid under the terms of the following sections, except when there is evidence that the postponement of works would imply a higher cost;

IV. Except in the cases considered in the preceding section, the Ministry shall instruct the Commission to prepare the bid and bases thereof, in accordance with that provided for in these Regulations, to request the generation capacity allowing to cover the addition or substitution in question. The bid and bases thereof shall be subject to the approval of the Ministry and may anticipate a prequalification of bidders and demand a bid security, and

V. Once the approval is received, the Commission will proceed to summon those bidders who offer the requested capacity or part of it to said entity.

ARTICLE 126. Private parties may answer the call for bids in the small scale production, independent production, cogeneration or self-supply modes. Each individual may offer the Commission, depending the mode in question, all its generation capacity or its surplus capacity to meet the total generation capacity required or part of it.

The licensees with capacity surplus of 20MW or less may offer said capacity to the Commission under no call for bids, under the terms of section II of Article 135.

ARTICLE 127. The call for bids and bases thereof shall be filed in such a manner as to allow all interested parties to elaborate on the contents of their proposals regarding technology, fuel, design, engineering, construction and location of the facilities.

BEST AVAILABLE DOCUMENT

This shall be understood without preventing the Ministry, in those cases it may deem convenient and basing and explaining its motives, from instructing the Commission in writing to give precise specifications in the call for bids and bases thereof, regarding the type of fuel to be used in electric power generation.

The Commission may indicate the preferential interconnection point and, on its case, the alternative interconnection points assigning to each of them the transmission cost for the Commission, and the maximum capacity to be accepted.

ARTICLE 128. Proposals shall conform, on its case, to the official Mexican standards and to the technical specifications prepared by the Commission and approved by the Ministry.

ARTICLE 129. The basis of the call for bids shall contain the methodology for the filing of proposals and evaluations thereof, as well as the criteria used in said evaluation.

ARTICLE 130. Individuals taking part in the call and not having the pertaining generation permits shall attach to their proposals those documents evidencing that all the requirements to become licensees are met.

ARTICLE 131. The Commission shall evaluate the bid received under the strict supervision of the Ministry in order to determine which of the solutions is the best in terms of technical feasibility, electric power total costs in the long run, stability, quality and safety, basing and explaining its resolution. The award shall be granted, on its case, to the individuals complying with the conditions set forth in the call and to those who jointly or severally offer the capability required under one or more of the modes referred to in Article 126, in such a manner as to obtain the lowest cost for the Commission, considering the electric power total cost in the long run stated in the proposals and, on its case, the transmission cost for the Commission mentioned in the last paragraph of Article 127.

ARTICLE 132. The Commission shall issue its judgment within the term set forth in the call, in accordance with the rules of the matter, and with the approval of the Ministry shall award the contract where the capacity and energy purchasing commitments are agreed upon and shall demand the incorporation of the pertaining covenants.

The Commission shall set up the relevant record, which record shall send to the Ministry. The Ministry shall grant the permits to the successful bidders.

ARTICLE 133. The Commission shall dismiss the call for bids for the projects in which no proposals had been received, or all those filed had been dismissed, in accordance with that set forth

BEST AVAILABLE DOCUMENT

in these Regulations and in all the applicable legal provisions.

The Ministry shall instruct the Commission to summon once again those individuals or to directly carry out the relevant projects.

ARTICLE 134. The Commission shall provide the Ministry with a reasoned report in writing of all its resolutions.

Title Thirteenth. On the Agreement for the Purchasing of Electric Power

ARTICLE 135. For the purchasing of electric power for public service, both in the short and in the long run, the Commission shall enter into agreements with the holders of generation permits, in accordance with the following:

I. With the successful bidders of the calls referred to in the preceding title, agreements shall be entered in order to agree upon the capacity commitments, and the purchase of electric power in accordance with the delivery rules set forth in these Regulations;

II. With the licensees having energy surplus of 20MW or less, in the cases the Commission may deem convenient, agreements may be entered to agree upon the capacity and electric power purchase commitments subject to the delivery rules, and

III. Agreements may be entered with other licensees in order to agree upon the electric power purchases depending on the delivery rules.

In the fulfillment of these agreements the Commission shall not enjoy any privilege or preferential treatment whatsoever, except those set forth in the Law and these Regulations.

ARTICLE 136. The agreements referred to in the preceding article may have a duration set forth by the parties, but in no case they may exceed the duration of the generation permit of the holder with whom the agreement is entered. The required mechanisms for the extension of said agreements may be established therein.

ARTICLE 137. Each agreement shall refer to the purchase of electric power from a single generation plant, in accordance with that considered in the pertaining generation permit. When one person provides electric power to the Commission from generation plants included in several permits, separate agreements shall be executed.

BEST AVAILABLE DOCUMENT

ARTICLE 138. The agreements with the successful bidders shall contain at least the following:

I. Electric power generation capacity that the licensee offers to the Commission all along the duration thereof:

II. The terms and conditions applicable to the generation capacity offered to the Commission, and the electric power deliveries thereof, in ordinary or emergency situations;

III. Relevant formulas to be applied, or rules and definitions to be used in order to determine the following:

a) Payments made by the Commission for the generation capacity offered;

b) Payments made by the Commission for the electric power delivered in ordinary or emergency situations;

c) Incentives or adjustments for the capacity availability offered to the Commission, and

d) Updating factors for the payments mentioned in subsection a) and b);

IV. Term or duration of the agreement;

V. Technical conditions of the electric power, including:

a) Definition of the interconnection point where said energy is to be delivered to the public service network;

b) Everything regarding measurement of the electric power delivered, and

c) Tension.

VI. The conventional sanctions and those applicable to the non compliance of that set forth in the agreement, attributable to the licensee or the Commission, and

VII. The jurisdiction to which the parties are to subject themselves in accordance with Article 45 of the Law and, on its case, the arbitration rules for technical matters.

The agreements entered with licensees referred to in section II and III in Article 135, shall mention at least the data indicated in sections IV to VII of this article.

BEST AVAILABLE DOCUMENT

ARTICLE 139. Regarding the agreements, the licensees selling electric power to the Commission shall have the following obligations:

I. To refrain from repairing, disconnecting or in any manner manipulating the measuring devices belonging to the Commission and to be employed in accordance with subparagraph B in section V of the preceding article;

II. To provide, operate and carry out the maintenance of the installations required for the transmission, transformation, measurement, protection and control of the electric power in accordance with the official Mexican standards and to the pertaining specifications issued by the Commission and approved by the Ministry, from the power plant to the interconnection point, without detriment to the agreements entered between the parties; and

III. Regarding delivery, to subject to the operation rules of the national electric system set forth by the Commission and deliver the load in accordance with same and with that provided for in that respect in these Regulations.

ARTICLE 140. The Commission shall have the following obligations with the private parties the agreements are entered with:

I. Payments shall be made on the day and in the manner agreed;

II. To notify in advance the licensee executing the agreement, about any temporary suspension in the delivery of electric power, in accordance with the pertaining agreement, resulting from maintenance or repair operations of the Commission installations, except in emergency situations, and

III. Timely inform the licensee of the deliveries foreseen.

ARTICLE 141. In emergency cases in the national electric system, the Commission may disconnect generators and take the measures required to alleviate the adverse effect in question. Said measures shall be suspended at the moment the emergency ceases to exist. At the request of the affected party the Ministry may require the Commission to provide a reasoned report on the causes giving rise to said measures.

Under these circumstances, all deliveries of electric power and capacity availability additional to that agreed upon between the licensee and the Commission shall be subject to a consideration in favor of the contributor, equal to the market value of the

BEST AVAILABLE DOCUMENT

378

electric power or capacity in question.

ARTICLE 142. Both the licensee and the Commission shall be responsible for installing and adapting their protection and control equipments in such a manner as to avoid possible damage to their installations due to internal or external disturbances.

Title Fourteenth. On Compensations

ARTICLE 143. Compensations to licensees who have been awarded the contracts by which the generation capacity is to be offered to the Commission for purchases of electric power through summons proceedings provided for in this chapter, shall be set forth as follows: one payment for capacity, adjusted by an availability factor, and another payment for power delivered at the interconnection point, in accordance with that provided for in articles 144-146.

ARTICLE 144. Payments made for capacity and power shall reflect, respectively, fixed costs, including return on investment and those variables incurred by the licensee. Information about these costs and the formulas used in their estimation must agree with the information provided in the proposal on which it was awarded, in the pertaining summons and the respective contract.

The costs mentioned in the preceding paragraph, both fixed and variable, shall include those related to the generation, as well as those incurred by the licensee in the transmission of power to the interconnection point.

ARTICLE 145. Payment for capacity shall be adjusted each month applying a coefficient estimated based on the availability factor observed for said period. In accordance with that provided for in the pertaining purchase agreements, said coefficient shall be:

I. Identical to the unit, when the availability factor observed is found to be within the estimated values;
II. Higher than the unit, when the availability factor is above the highest estimated value;
III. Lower than the unit, when the availability factor is below the lowest estimated value, and
IV. Zero, when the availability factor is lower than the estimated minimum value.

ARTICLE 146. By mutual understanding of the parties, the updating formulas for payments made by the Commission may be included in the agreements mentioned in the preceding articles. Among others, the purpose of said formulas shall be to update the amount of the payments regarding fuel prices.

BEST AVAILABLE DOCUMENT

ARTICLE 147. Compensations for capacity made available to the Commission in the agreements referred to in section II in article 135, shall be determined according to methodology prepared by the Commission and approved by the Ministry. Compensations for power delivered to the Commission in the agreements related to section II and III in article 135 shall be determined at the end of each month applying to the power measured at the interconnection point the price offered by the licensee in question, according to that provided for in article 152, section II.

Title Fifteenth - On delivery

ARTICLE 148. The delivery of electric power to the public service network must comply with the operation and delivery rules of the national electric system established by the Commission, in accordance with provisions in the Law and these Regulations.

ARTICLE 149. According to terms in article 36 Bi of the Law, the Commission, in operations controlling deliveries made to the public service transmission network by the different power plants, both owned by the Commission and by private parties with whom it has an agreement, shall accept electric power deliveries. These deliveries shall strictly follow the increasing order of their respective short term total cost, or the price offered, as the case may be, up to the amount required to satisfy demand at all times.

ARTICLE 150. As a permanent rule, the Commission shall comply at all times with provisions in the preceding article, except for safety reasons or under technical emergency conditions or circumstances, in which due to an act of God or force majeure, the electric power service could be interrupted, restricted or considerably damaged.

ARTICLE 151.- At the beginning of each month and using the most convenient method, the Commission shall notify each one of the external producers with whom it has entered agreements for the purchase of electric power, as to the estimates of electric power to be delivered by the respective average producer, during each one of the following three months. The aforementioned estimates shall be prepared by the Commission taking into consideration the outlook on electric power demand, the availability of all generators, the operational conditions of the network in the different geographic areas, the regulations on environmental matters and the prices of the different energy products. This notification shall not be of a limiting nature for the Commission, nor shall it create any rights for the external producers.

BEST AVAILABLE DOCUMENT

380

ARTICLE 152.- Each of the external producers with whom the Commission has entered agreements shall report the following to said entity five days before the beginning of each period:

I. The short term total cost of the electric power produced to be delivered in said period, estimated in accordance with the agreed formulas in cases of licensees, mentioned in section I, article 135, and

II. The price at which electric power is to be delivered and its maximum amount during base, intermediate and peak hours within the period in question, in the case of licensees mentioned in sections II and III, article 135.

The duration of the period referred to in this article shall be determined by the Commission. Prior authorization from the Ministry, all licensees with whom the Commission has entered an agreement shall be informed of same.

ARTICLE 153.- Using the appropriate methods, the Commission shall send the delivery program to each and every one of the external producers with whom it has entered agreements. This program shall include detailed information hour by hour of deliveries to be made the following day, by said producer, and shall be sent not later than 3:00 p.m.

Said program shall be prepared abiding by article 149, taking into consideration the estimated demand, the geographic area of the producer and network restrictions; the hydraulic availability, the availability of all the generating units; the interruptible loads and short term total costs of electric power or the prices offered by all producers.

Title Sixteenth. On the Electric Power Transmission Services

ARTICLE 154. The licensees may request the transmission service to the Commission. This service shall be rendered by contract and shall imply an economic consideration in favor of said entity in accordance with that set forth in this title.

ARTICLE 155. When there is a possibility of transmitting additional electric power with the existing installations, the Commission shall provide the transmission service to those licensees requesting it, on a first come first served basis.

When this service cannot be provided due to a technical impediment, the Commission shall notify in writing to the applicant, stating the reasons of the refusal. In case the

BEST AVAILABLE DOCUMENT

applicant does not agree with the reasons for refusal, the applicant may request the participation of the Ministry.

ARTICLE 156. In case the Commission has no possibilities to provide the transmission service with the existing installations, the Commission may agree with the applicant on the building of the required installations, sharing the investment cost in mutual agreement and based on that provided for by the Law and these Regulations.

If the Commission and the applicant could not agree on this respect, the latter may request the participation of the Ministry.

ARTICLE 157. Private parties may build the transmission lines they may require, provided said lines are not interconnected to the public service network and comply with the official Mexican standards.

ARTICLE 158. The charges for the transmission service provided by the Commission to private parties shall be estimated taking into account the costs incurred by the Commission in providing said service, taking into consideration regional details. The pertaining methodology shall be proposed by the Commission and approved by the Ministry, and by the Ministry of Finance and Public Credit.

When estimating the costs incurred to provide the transmission service to an applicant, the Commission shall consider the technical solutions that allow provision of the required service at the lowest cost, including the exchange of electric power among different control areas, provided there is assurance of non damage to quality, stability and safety of the public service in the control areas in question. The applicant may file technical proposals or suggestions with the Commission in order to facilitate the decision of said entity, regarding the manner in which the electric power is to be transmitted or exchanged at the lowest cost.

In case there are differences between the applicant and the Commission regarding the technical method to be applied in the transmission or exchange of electric power at the lowest cost, the applicant may require the participation of the Ministry.

ARTICLE 159. Charges for other services which jointly with transmission shall be paid by said private parties, shall be considered separately and shall be part, on its case, of the pertaining agreements.

Rights and obligations from an agreement regarding transmission services or other joint services, may be transferred among private parties, prior authorization of the Ministry.

BEST AVAILABLE DOCUMENT

ARTICLE 160. The charge set forth in the pertaining agreement for the transmission service, as well as for those joint services offered by the Commission, shall be approved by the relevant authorities and may be reviewed in accordance with the applicable indexes set forth in the methodology established in Article 158.

Title Seventeenth. On the sale of electric power to the licensees by the Commission

ARTICLE 161. Whenever an external producer requires backup capacity, the Commission shall provide it, except in cases of technical impediment or economic reasons that may prevent it, by entering into the pertaining supply contract.

Technical impediment and economic reasons that may prevent it, shall be understood as those set forth in Article 20.

In the agreements referred to in this article, the applicable mechanisms shall be established in case of adjustment, modification or restructuring of backup rates.

ARTICLE 162. The backup rate shall govern all external producers and shall consider all modes authorized by the pertaining authorities at the request of the Commission.

CHAPTER X

On Inspections

ARTICLE 163. In order to oversee the fulfillment of the Law and these Regulations, the Ministry may carry out whatever inspection visit it may deem convenient, without detriment to those visits deriving from the application of the Federal Law of Metrology and Standardization.

Inspectors shall receive an official identification document and all the elements required for the complete and efficient fulfillment of their assignment.

Inspectors shall also have the pertaining inspection warrant, which must be addressed to the person receiving the inspection visit and which shall take place on the inspection date, at the pertaining address, and shall include its duration, and all other circumstances to be taken into consideration. In this warrant the

BEST AVAILABLE DOCUMENT

legal basis and the purpose of the visit must also be stated.

Inspectors shall have free access to the facilities, premises and installations to be inspected, in order to comply with their tasks. The users, consumers or pertaining owners and the supplier, on its case, shall provide everything required for the inspection to take place, and should also instruct their representatives or personnel not to prevent said inspection.

If in order to carry out the inspection visit, the collaboration of the supplier's personnel would be needed, notice shall be given of these circumstances with the purpose of commissioning the required personnel. At the request of the Ministry, the supplier shall provide the required instruments and equipment for the efficient development of these visits. The supplier shall report on the availability of personnel to collaborate in the visit, which shall be gathered at the location and on the day and hour stated by the Ministry.

The supplier shall notify in advance the removal or substitution of personnel.

ARTICLE 164. The Ministry shall carry out the following inspection visits:

I. To the supplier:

a) During the construction of works and facilities, in order to oversee the compliance with project and program specifications and approved budget;

b) To oversee the efficient and economic functioning and correct operation during operation in works and facilities, and

c) In works and installations in operation, to oversee the fulfillment with that set forth in Chapter III and IV of these Regulations, in their relevant part.

II. To the licensees, referred to in Article 36 of the Law:

To oversee compliance of specifications by the Ministry and the supplier, during construction and operations of respective works and facilities,

III. To oversee in the supplier's works and facilities:

a) Compliance of provisions in Chapter VII of these Regulations;

BEST AVAILABLE DOCUMENT

b) That their lines are not connected with other users' or suppliers' lines, except when prior approval has been granted by the Ministry and an agreement has been entered with the supplier;

c) That electric power altering or hindering the operation of the supplier's control and measuring equipment does not consume any electric power, and

d) That electric power is not used in any way other than as provided in the supply agreement.

ARTICLE 165. The next general procedures should be followed during inspections:

I. The inspector shall deliver the inspection warrant to the person in charge;

II. Minutes shall be drawn before two witnesses proposed by the person in charge, or by the inspector, if the person in charge is not willing to appoint them. The person in charge shall state in the minutes whatever is convenient for his best legal interest.

III. A copy of the minutes shall be delivered to the person in charge who is to sign it. The minutes will be valid even though the person in charge refuses to sign it.

IV. If inspection is hindered it shall so be stated therein with the warning that the pertaining sanctions and judicial pressure shall be applied. If inspection requested by the supplier is hindered and the purpose of the visit is to verify the existence of any violation provided for in sections II to VI in Article 35, its existence shall be assumed and sanctions provided for by Article 40, 41 and 42 of the Law shall be applied to the user;

V. Within a ten day working period after the date of inspection the user must submit pertaining evidence in writing.

ARTICLE 166. In the event of inspections of high tension works and installations, in order to prove that the official Mexican standards are being complied with, the procedures set forth in the preceding article shall be applied:

I. The user shall be given notice of the time and date on which the inspection visit of the installations is to be carried out. This notice shall be given at least twenty

BEST AVAILABLE DOCUMENT

four hours in advance;

II. If the installation does not comply with the official Mexican standards in aspects that may endanger the life or property of persons, the user shall be notified about any faults found, and also about corrections to be made and the period to carry them out. The user shall be warned that sanctions will be applied in case of non compliance;

III. If any parts of the installation may endanger the life or property of any person, these failures shall be notified to the user in reference to the pertaining official Mexican standards, stating corrections to be made and the period to carry them out. This period shall be estimated according to the complexity of work, warning the user that if requirements are not met the supply will be halted according to provisions in section III, in Article 35 without any detriment of the supplier's authority to cut off the service. Once this period has elapsed, a second inspection will be carried out, and if faults have not been corrected, orders shall be given to the supplier to halt supply. A copy of this order shall be sent to the user;

IV. If the installation does not comply with the official Mexican standards and represents an imminent hazard for the life or property of persons, order shall be given to the supplier to halt supply, and the user shall be given notice of deficiencies found. If these deficiencies are not corrected the partial or total removal of the installations shall be ordered, as the case may be.

Once the Ministry has verified that the installation does not represent any hazard, it shall give notice to the supplier to resume the supply.

CHAPTER XI

On Sanctions

ARTICLE 167. The amount to be paid in sanctions provided for in Article 40 in the Law shall be determined taking into account:

I. The importance or seriousness of damage caused by the action or omission motive of the violation;

II. The intentional nature of the action or omission cause of the violation, and

BEST AVAILABLE DOCUMENT

III. The date on which the violation was made, which shall be used as basis to estimate the consumed, sold or resold power.

ARTICLE 168. A second offender shall receive a sanction equivalent to twice the sanction applied the first time. A second offense is considered when the infringer committing a violation and receiving a sanction commits another violation of the same nature.

The infringer incurring in contempt shall receive a sanction equal to three times the sanction applied the first time, besides the definite or temporary suspension of supply. Contempt exists when the infringer to whom a sanction has been applied for a second offense, commits another violation of the same nature.

ARTICLE 169. The application of sanctions does not release the infringer from the obligation of paying to the supplier the electric power unduly consumed, plus a charge as compensation, estimated at a rate equal to the monthly amount that, as extra charges, is determined in the applicable fiscal provisions, per month or fraction of time of the outstanding debts in favor of the supplier, who shall prepare the pertaining full settlement and shall notify the user for payment purposes.

ARTICLE 170. The estimate on paid consumed energy shall be determined according to provisions in Article 31. The following shall also be considered:

I. Date of leasing or occupation of the building where electric power has been consumed;

II. Previous invoices if this is the case;

III. The measurement made by a reference pattern measuring equipment, on its case, and

IV. In general, any other pertinent data or information assisting to precisely determine unpaid consumption.

In the estimate of compensation, according to provisions in section II, in Article 40 of the Law, consumptions recorded by the measuring equipment and considered as normal in the history of supply for the two year preceding the inspection minutes, shall be averaged.

A three month term shall be considered as the maximum period for undue consumption for temporary service in housing construction work in progress; for any other installations, said period shall never exceed twenty four months.

ARTICLE 171. To comply with provisions in the last paragraph of Article 40 of the Law, the Ministry shall adopt the relevant

BEST AVAILABLE DOCUMENT

measures to promote normalization of services in favor of persons lacking resources, who due to this fact have incurred in violations of sections I and III of said article. Said measures shall subject to the following conditions and procedures:

I. That the infringers are located in irregular settlements in process of regularization:

II. That the electrification of the settlement has not been requested, or having done so they could not pay the pertaining contribution, under the terms of Article 12;

III. That if according to the supplier occurs that provided for in the Law, it shall request from the Ministry authorization not to cut off service;

IV. The Ministry shall summon all infringers to submit before the supplier an electrification application. The Ministry shall authorize the work to be performed when infringers are given notice about the contribution to be paid and accept to pay it:

V. The supplier with the Ministry's intervention shall agree with each one of the infringers on the amount of the contribution as well as the manner and terms of payment, and

VI. For the execution of each individual agreement it shall be a requirement for the requesting of service to evidence ownership or procedures to obtain the legal ownership of the building before the pertaining authority. Contribution and payments to be made are to be set forth in the agreement. If the requesting party does not pay on the dates agreed, the supplier may halt supply. The obligation of a monthly payment of estimated power consumption is to be set forth in the agreement, applying the pertaining rate until the supplier completes the works and installations and is enabled to enter into the relevant agreement.

CHAPTER XII

On the Administrative Remedy

ARTICLE 172. In accordance with Article 143, the remedy shall abide by the following:

I. The brief by which action shall be brought is to be submitted before the Ministry, directly or by other means, evidencing the date of filing;

BEST AVAILABLE DOCUMENT

II. Copy shall be sent to the supplier or any other third party affected by the resolution issued so that in a fifteen working day period, may plead whatever is convenient to its best legal interest and submits pertaining evidence;

III. It shall be considered that action has not been brought when it is filed extemporaneously, and whenever the legal interest or legal status is not evidenced.

TRANSITORY ARTICLES

FIRST. These Regulations shall become effective on the day following publication in the Official Daily of the Federation.

SECOND. The following provisions are annulled:

I. Regulations on the Electricity Industry Law, published on the Official Daily of the Federation on October 4, 1945;

II. Regulations on Electrical Installations, published on the Official Daily of the Federation on June 22, 1981;

III. Regulations of the Electric Power Public Service Law on Self-supply matters, published in the Official Daily of the Federation on May 31, 1991;

IV. Decree relevant to how electric utilities must acquire the stamps having the "Electrification" restamping, published in the Official Daily of the Federation on February 28, 1941;

V. Decree creating the Coordinating Technical Commission of Electrification of Mexico, published in the Official Daily of the Federation, on March 18, 1944;

VI. Decree ordering that as of January 1, 1948, the amounts collected from the utilities selling electric power shall be paid to Nacional Financiera or to the institutions appointed by it, as published in the Official Daily of the Federation on December 27, 1947;

VII. Decree relevant to production and sale of electric equipment and devices and their spare parts for them to operate in the fifty and sixty cycle per second frequencies as published in the Official Daily of the Federation in January 11, 1968:

BEST AVAILABLE DOCUMENT

VIII. Decree relevant to production, import and sale of electrical equipment and devices and their spare parts used in the agriculture, commercial and industrial areas, and also relevant to the generation and distribution of electric power for them to operate in the sixty cycle per second frequency or the fifty and sixty cycle per second frequencies, published in the Official Daily of the Federation on February 17, 1968;

IX. Decree declaring as public service the frequency unification of electric power supply at sixty cycles per second, for all systems in the country assigned to public service, as published in the Official Daily of the Federation on July 23, 1971;

X. Regulations on electric power supply published in the Official Daily of the Federation on May 8, 1958;

XI. General regulations on inspections on electricity matters published in the Official Daily of the Federation on March 23, 1966;

XII. Regulations on account collection and service cut off published in the Official Daily of the Federation on November 15, 1966;

XIII. Agreement by which instructions are given to utilities and electric power producers on their own use, on procedures to be followed to prevent sabotage in their works and facilities, published in the Official Daily of the Federation on July 1, 1942;

XIV. Agreement setting forth the time schedule on which illegal consumption of electric power is to be determined based on which the Ministry shall determine the amount to be paid to the suppliers' companies, published in the Official Daily of the Federation on May 16, 1945;

XV. Agreement setting forth procedures to be followed to estimate the amount to be reimbursed because of faults in the electric power measuring devices, published in the Official Daily of the Federation on April 12, 1956;

XVI. Agreement setting forth the list of household electric equipment and devices, published in the Official Daily of the Federation on June 28, 1968;

XVII. Agreement setting forth the list of articles that due to a technical impediment must only operate in the fifty or sixty cycle per second frequencies or any other special frequency, published in the Official Daily of the Federation on June 28, 1968;

BEST AVAILABLE DOCUMENT

XVIII. Agreement setting forth the list of household equipment and electrical devices that may be adapted to operate in the sixty cycle per second frequency without any cost for the user, published in the Official Daily of the Federation on October 20, 1972;

XIX. Official communication number 827 instructing electric power suppliers with respect to procedures to be followed for the inspection of their measuring devices, published in the Official Daily of the Federation on September 30, 1932;

XX. Provisions relevant to electric power supply in the case of application of general and special rates, published in the "Official Daily" on January 19, 1962, and published in the Official Daily of the Federation on November 23, 1965, and

XXI. Technical standards for electrical installations provided for on the electrical installations regulations, published in the Official Daily of the Federation, on July 30, 1981, and the supplements, amendments and clarifications to said standards, published in the Official Daily of the Federation on April 22, 1985.

THIRD. While the official Mexican standards referred to herein are issued, the Electric Installations Regulations, their technical standards, and supplements, amendments and clarifications shall continue to apply.

FOURTH. While the official Mexican standards referred to herein are issued, the pertaining methodologies and references shall be proposed by the Commission and approved by the Ministry.

FIFTH. While the new supply contract formats are approved, those currently existing shall be used.

SIXTH. The frequency tolerance provided for in section I, in Article 18, shall be reached six months after the date these Regulations become effective.

SEVENTH. Location of the required capacity shall be detailed in the summons published for capacity supplement within the twelve months following the date these Regulations become effective, in addition to specifications about the type of fuel referred to in the second paragraph of Article 127.

Given in the Residence of the Federal Executive Branch, in the City of Mexico, Federal District, on the twenty sixth day of May, nineteen hundred and ninety three.- Carlos Salinas de Gortari.- Signature.- The Minister of Finance and Public Credit, Pedro Aspe Armella.- Signature.- The Minister of Commerce and Industrial

BEST AVAILABLE DOCUMENT