RDA International, Inc.

PN-ABT-708

ISN 92326

P-151
92/07

TUVALU

BOTTOMFISH PROJECT

FIELD PROGRAM OUTLINE

Pacific Islands Marine Resource Project
Tuvalu Component
Project No. 879-0020

Prepared by RDA International, Inc.
under Contract No. 879-0020-C-00-1231-00
with USAID/RDO/South Pacific

May 1992

Prepared by
Wayne Haight
Marine Biologist

RDA International, Inc.
801 Morey Drive
Placerville, CA 95667-4411 USA
Telephone: (916) 622-8800
Facsimile: (916) 626-7391
Telex: 383656 RDA

This report was completed through the assistance of the United States Agency for International Development (A.I.D.). The views, expressions and opinions contained in this report are the author's and are not intended as statements of policy of either A.I.D. or the author's parent institution.

B

TABLE OF CONTENTS

1.0	OBJECTIVE	1
2.0	SAMPLING DESIGN	1
	2.1 Charting	1
	2.2 Fishing Operations	3
	2.2.1 Station Definitions	3
	2.2.2 Definitions of Body Dimensions used in Describing Fish	6
3.0	DATA LOGS	6
	3.1 Fish Sampling Log	6
	3.2 Handline Fishing Log	9
4.0	DATA ENTRY	11
REFERENCES		12

LIST OF FIGURES

1.	The Western Samoan handreel used by the SPC master fishermen.	2
2.	Typical terminal gear for bottom fishing with the Western Samoan handreel.	2
3.	Hydrographic survey log.	4
4.	Example of shallow to deep handline drift fishing.	5
5.	Tail area of a rockfish, *Sebastes*, showing lengths, fin ray construction, and other structures.	7
6.	Fish sampling log.	8
7.	Handline fishing log.	10

1.0 OBJECTIVE

Tropical deepwater bottomfish typically have a high age at first maturity, long life span and slow growth rate. These factors, in combination with a highly variable larval recruitment rate, make these fishes susceptible to overfishing. Therefore, to scale a commercially viable long-term fishery in Tuvalu, the sustainable yield of the bottomfish stocks within the EEZ must first be estimated. Several yield assessment studies associated with atolls and high islands elsewhere in the South Pacific suggest annual sustainable yields of deepwater bottomfish in the region may be approximately 200-600 kg/nmi of 200 m isobath (Polovina and Shomura 1990). An initial rough estimate of the potential sustainable yield of bottomfish from the Tuvaluan EEZ may be obtained by applying the above yield range to the length of the 200 m isobath in Tuvaluan waters.

Adequate charts are available for waters adjacent to the inhabited atolls, however, bathymetric data and charts for most of the banks with suitable deepwater bottomfish habitat are seriously lacking. Therefore, during the first stages of the Tuvaluan resource assessment, effort must be made to assemble all existing bathymetric data, and dedicate project resources to survey and chart suitable bottomfish habitat. It may also be possible to utilize remote sensing data to provide a better estimate of potential bottomfish habitat in the entire region.

The short time frame of this project precludes the compilation of a time series of catch and effort and length frequency data needed to apply traditional production models. However, it may be possible to provide an estimate of initial stock biomass in the region if, during the charting process, areas suitable for depletion modeling are discovered. If such areas (small isolated banks or seamounts) are found, sustained systematic fishing effort must be applied to ensure the local stocks are depleted within the time frame of this project.

2.0 SAMPLING DESIGN

Project operations in year 1 (1992) will be conducted with the M/V *Manaui*. All necessary positioning, sounding, and fishing gear will be procured or fabricated prior to the first cruise. Positioning will make use of a satellite global positioning system (GPS). Soundings will be done with an echo type sonar fathometer. Bottomfishing will be done using droplines retrieved with wooden "Samoan" type handreels (Fig. 1 & 2). Detailed descriptions of the fishing techniques are available in Chapman (1988) and Dalzell and Preston (1991).

2.1 Charting

Since adequate charts of many of the Tuvaluan fishing banks are lacking, considerable effort should be directed toward hydrographic surveying of the fishing areas, and the creation of "chartlets" of the specific fishing areas which can be used to update

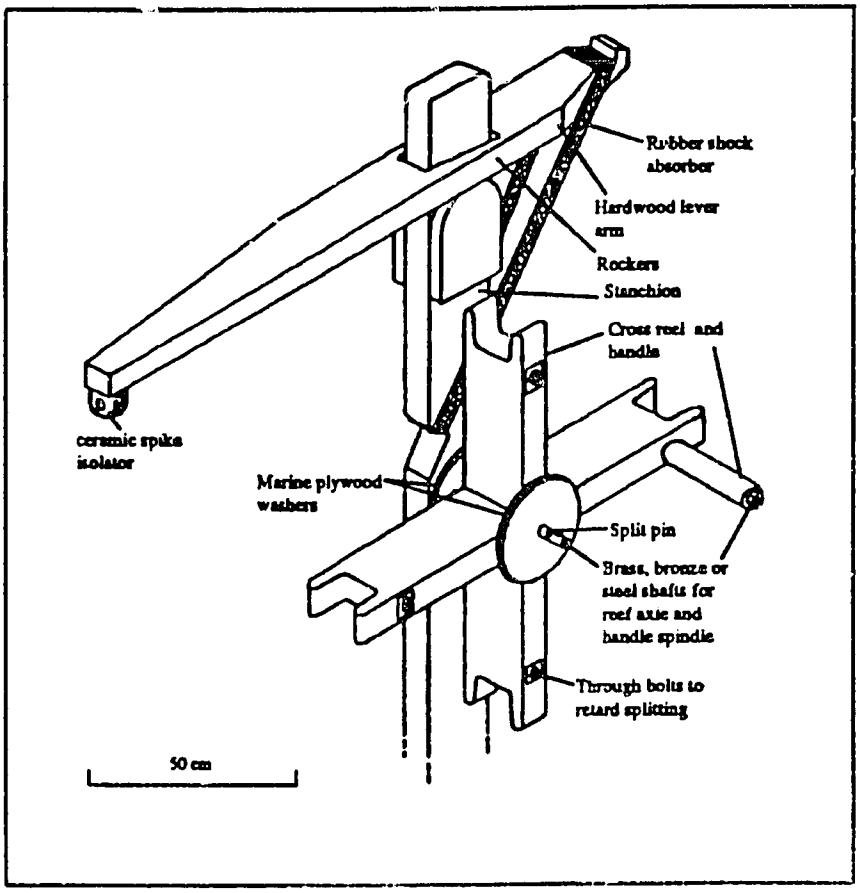

Figure 1: The Western Samoan handreel used by the SPC masterfishermen

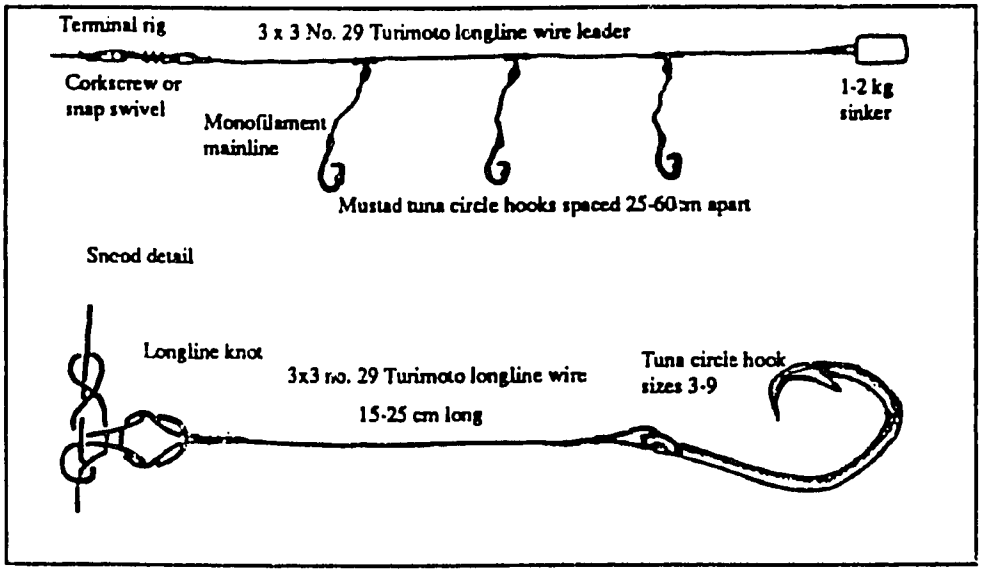

Figure 2: Typical terminal gear for bottom fishing with the Western Samoan handreel

current charts to provide an estimate of the length of the 200 m isobath. Accurate measures of position and depth are crucial in this task. Effort should be given to verifying the position of the 200 meter isobath of banks and islands as displayed on the latest hydrographic charts, and charting the position in areas where soundings are lacking. Positions and depth soundings should be taken regularly while en route to the fishing areas, and noted on the hydrographic survey log (Fig. 3). When approaching the fishing grounds, soundings and positions should be taken more frequently. While on the fishing grounds, positions and depth measurements should be taken regularly, especially when looking for promising grounds, or while drift fishing. For example, if while drift fishing at a specific bank, the vessel is positioned so it is set from shallow to deep, regular position and sounding measurements should be taken while drifting, and while motoring back from deep to shallow (Fig. 4). All positions and soundings should be noted on the hydrographic survey log. Detailed description for filling out the survey log are as follows:

- Vessel: Enter vessel name.
- Cruise: Enter specific cruise number.
- Comments: Enter any comments, problems, etc.
- Date: Enter date by month, day, year.
- Time: Enter local time.
- Area: Enter name of island or bank.
- Latitude: Enter latitude in degrees, minutes, seconds.
- Longitude: Enter longitude in degrees, minutes, seconds.
- Depth: Enter depth in meters.
- Bottom type: Enter general note about bottom type if available. For example: soft, hard, sandy, coral, mud, etc.

2.2 Fishing Operations

Bottomfishing should be conducted within the 75-400 m depth range. Suitable grounds will be located using the echo-sounder. Once suitable grounds are located, drops will be made while the boat is drifting to locate concentrations of fish. Much of the fishing will be carried out in this manner, in order to survey the largest amount of habitat possible. Occasionally, if conditions permit, the vessel may be anchored in shallower water and allowed to drift with the current and wind over depths suitable for bottomfishing. It must be remembered that the target species are primarily *eteline lutjanids* so fishing effort must concentrate on depths suitable for these fish (100-300 m).

Each specific drift area, or anchored position will constitute an individual station. The definition of a station is as follows:

2.2.1 Station Definitions

A station is a significant unit of scientific work that is separated in time or space or both from other units. To avoid assigning station numbers for trivial changes in time

RDA International, Inc.

REPUBLIC OF TUVALU

HYDROGRAPHIC SURVEY LOG

SHEET_____OF__

VESSEL_____ CRUISE_____ COMMENTS_____

DATE	TIME	AREA	LATITUDE	LONGITUDE	DEPTH (m)	BOTTOM TYPE

Figure 3. Hydrographic survey log.

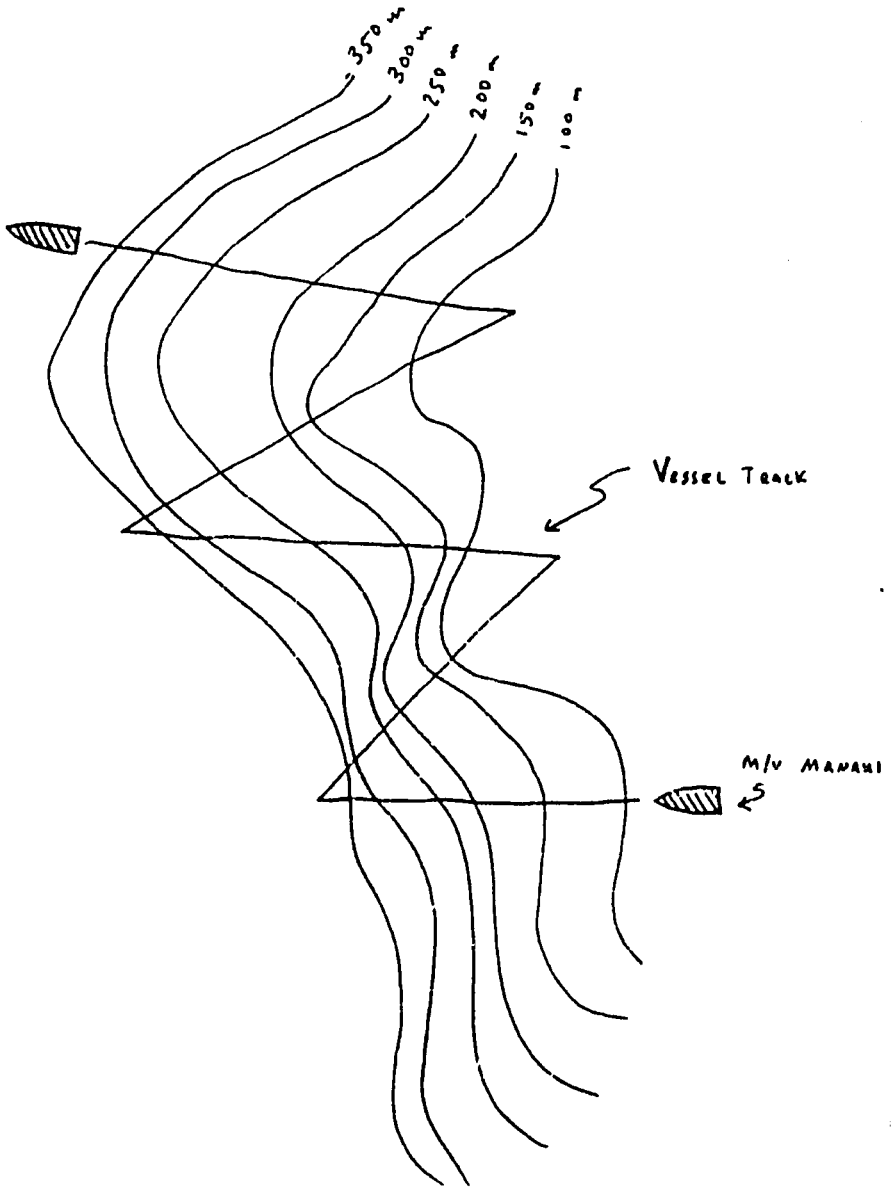

Figure 4. Example of shallow to deep handline drift fishing. The vessel drifts from shallow to deep and slowly motors from deep to shallow. Regularly spaced position measurements and soundings are taken to estimate the length of the 200 m isobath.

or locality, and to simplify the recording of observations which are made continually or periodically, certain definitions have been provided:

- In handline fishing while drift fishing, each drift or group of consecutive drifts at the same locality constitute a station.
- Each anchored position if handlines enter the water.

Remember that proper accounting of the amount of handline effort is important. If drifts are made with lines in the water, even for a short time, and no fish are caught, the station MUST still be recorded with the position, number of lines, bait, number of fish caught (0), etc.

One to two persons should be assigned the data recording duties. These persons should be responsible for obtaining positions and soundings for the hydrographic survey log and accurately completing the form. They are also responsible for the proper accounting of line hours, fish caught, depths, fish weight and length, etc. They can work as a team with one person obtaining measurements, depths, etc., and one person recording the data. Definitions and description of data forms follow:

2.2.2 Definitions of Body Dimensions used in Describing Fish

Fish will be measured to tenths of a centimeter using either a length frequency board or metric calipers. Whenever possible, all measurement should be made on the left side of the fish.

Fork Length: Fork length is the preferred measurement of fish in this study. Fork length measurements are made on fishes with forked, rounded lunate, or emarginate tails. The majority of fishes encountered in this program will fall into these categories. The fork length of a fish is the straight line distance from the tip of the snout (with jaws closed) regardless of whether the lower jaw extends beyond the snout, to the tip of the median caudal fin rays (Fig. 5).

Standard Length: Occasionally fish with damaged tails will be encountered making it necessary to measure standard length rather than fork length. The standard length of a fish is the straight line distance from the tip of the snout to the posterior edge of the hypural plate (Fig. 5). Reasonably accurate standard length measurements can be made by measuring to the mid-line of the crease that is formed when the tail is sharply bent.

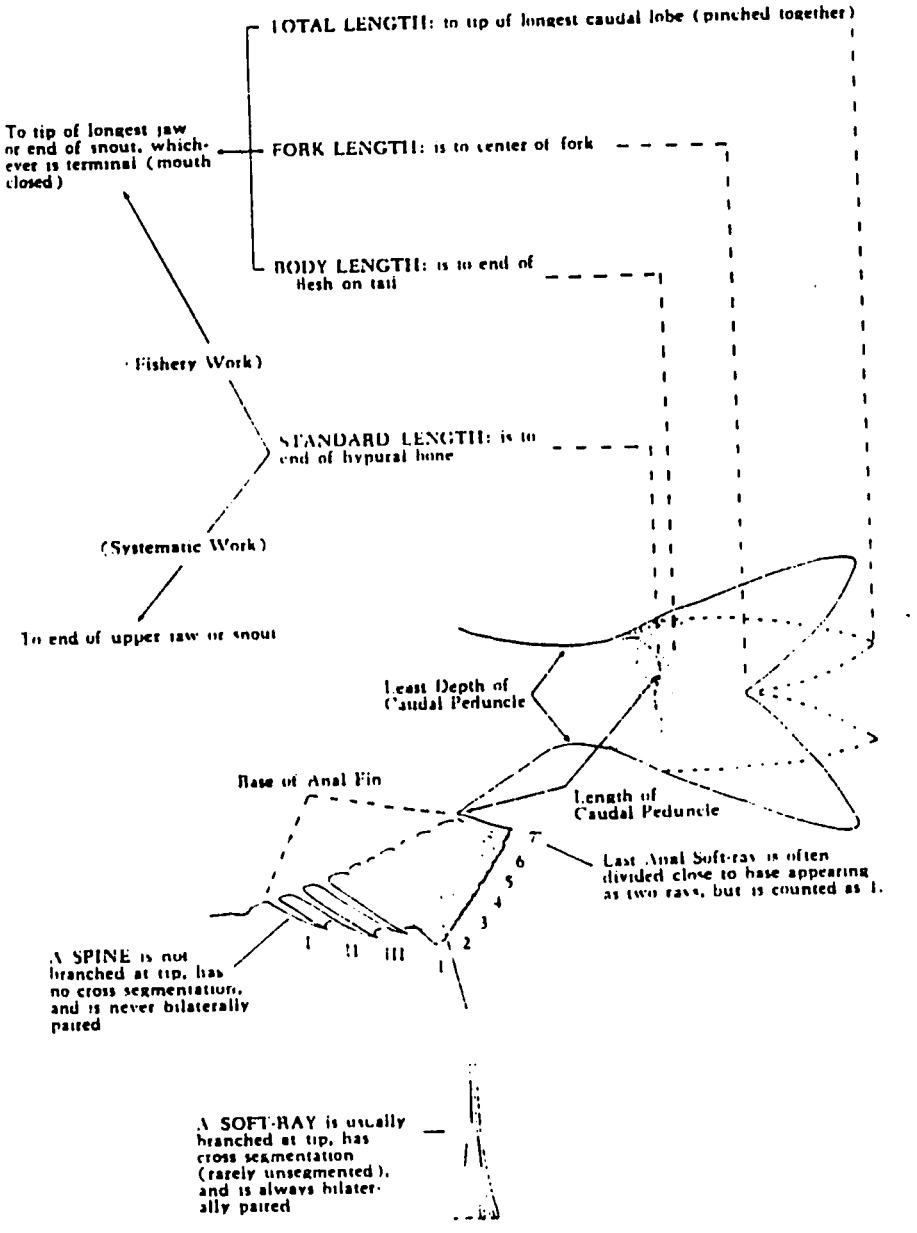

FIGURE 5. Tail area of a rockfish, *Sebastes*, showing lengths, fin ray construction, and other structures.

REPUBLIC OF TUVALU

FISH SAMPLING LOG

RDA International, Inc.

SHEET_____OF_____

VESSEL_____ CRUISE_____ COMMENTS_____

FISH NO.	DATE	STA. NO.	AREA	LAT.	LONG.	SPECIES	FL (cm)	WT (kg)	DPTH (m)

Figure 6. Fish sampling log.

3.0 DATA LOGS

3.1 Fish Sampling Log

The fish sampling log (Fig. 6) is the primary log for recording basic biological information on each individual fish. Each fish that is sampled during the cruise is assigned a number referred to as the fish number. The following are detailed instructions for filling in the log.

- Vessel: Enter the name of the vessel.
- Cruise: Enter the cruise number.
- Comments: Enter any additional comments.
- Fish number: Enter the consecutive fish number. This number should begin with 1, the first fish caught, and run consecutively through the last fish caught for each cruise. This number should match the number entered on the handline log.
- Date: Enter the local date by month, day, year.
- Station number: Enter the consecutive station number.
- Area Fished: Enter the name or locality of the area fished.
- Lat/Long: Enter the latitude and longitude of the station fished in degrees, minutes, seconds.
- Species name: Enter the SCIENTIFIC name of the fish measured to tenths of a centimeter.
- Fork length: Enter the fork length of the fish measured to tenths of a centimeter.
- Weight: Enter the weight of the fish to tenths of a kilogram.
- Depth caught: Enter the depth in meters, at which each fish is caught.

3.2 Handline Fishing Log

The handline fishing log (Fig. 7) is the primary log for recording information on handline fishing operations. When fishing is conducted while drifting, a separate sheet must be used for each drift. The following are detailed instructions for filling out the log.

- Vessel: Enter the name of the vessel.
- Cruise: Enter the cruise number.
- Station number: Enter the consecutive station number.
- Date: Enter the local date by month, day, year.
- Area Fished: Enter the name or locality and latitude and longitude of the area fished in degrees, minutes, seconds.
- Drifting/Anchored: Check whether drifting or anchored.

RDA International, Inc.

REPUBLIC OF TUVALU

HANDLINE FISHING LOG

SHEET_____OF_____

VESSEL_____ CRUISE_____ STATION_____ DATE_____

AREA FISHED_____ BANK_____

DRIFTING_____ ANCHORED_____ DEPTH(start)_____ DEPTH(end)_____

TIME(start)_____ TIME(end)_____ DRIFT NO._____

NO. LINES FISHING_____ NO. HOOKS PER LINE_____ HOOK SIZE_____

BAIT USED_____ COMMENTS_____

FISH NO.	TIME CAUGHT	SPECIES CAUGHT	FORK LENGTH(cm)	DEPTH CAUGHT (m)

Figure 7. Handline fishing log

- Depth: For each drift or station enter the starting and ending depth in meters.
- Time: For each drift or station enter the local time for the start and end of fishing. Fishing begins when the first hook enters the water, and ends when the last hook is hauled on deck.
- Drift Number: If drift fishing enter the drift number. Use a separate sheet for each drift. If multiple drifts are made at one station, number them consecutively starting with the number 1. If anchored, leave blank.
- Number of lines: Enter the number of lines fishing during the complete drift or station. The number may be fractional.
- Number of hooks/line: For each drift or station, enter the number of hooks used on each line.
- Hook size: Enter the hook size and manufacturer.
- Bait used: Enter the kind(s) of bait used.
- Comments: Enter any additional comments.
- Fish number: Enter the assigned fish number. Fish should be numbered consecutively during the cruise beginning with the number 1.
- Time caught: Enter the local time when each fish is caught.
- Species name: Enter the SCIENTIFIC name of the fish.
- Fork length: Enter the fork length of the fish measured to tenths of a centimeter.
- Depth caught: Enter the depth in meters, at which each fish is caught.

4.0 DATA ENTRY

Data from fishing operations should be entered into a computerized database immediately after each fishing cruise. This prevents an excess accumulation of data to be entered, and also allows any discrepancies to be identified before too much time passes and cruise specifics are forgotten. Data from each of the three forms should be entered in a separate database, each with the data in the proper data field order. The software (spreadsheet, database, etc.) used for data entry will be chosen by personnel in Tuvalu. The Marine Biologist will require a copy of the database in ASCII format for SAS analysis of catch/effort and biological data. If possible, hydrographic data should be used to create or update charts before the next fishing cruise.

REFERENCES

Chapman, L.B. 1988 Deepsea fisheries development project. Report on second visit to Tuvalu. South Pacific Commission. 29 pp.

Dalzell, P. and G.L. Preston. 1991 Deep reef slope fishery resources of the South Pacific. SPC Inshore Fisheries Research Project Tech. Paper No. 2.

Polovina, J.J., and R.S. Shomura. 1990 USAID and NMFS workshop on tropical fish stock assessment. NOAA-TM-NMFS-SWFSC-148.