ISN 87234

ECONOMIC AND TECHNICAL FACTORS OF THE KAZAKHSTAN PETROLEUM REFINING INDUSTRY

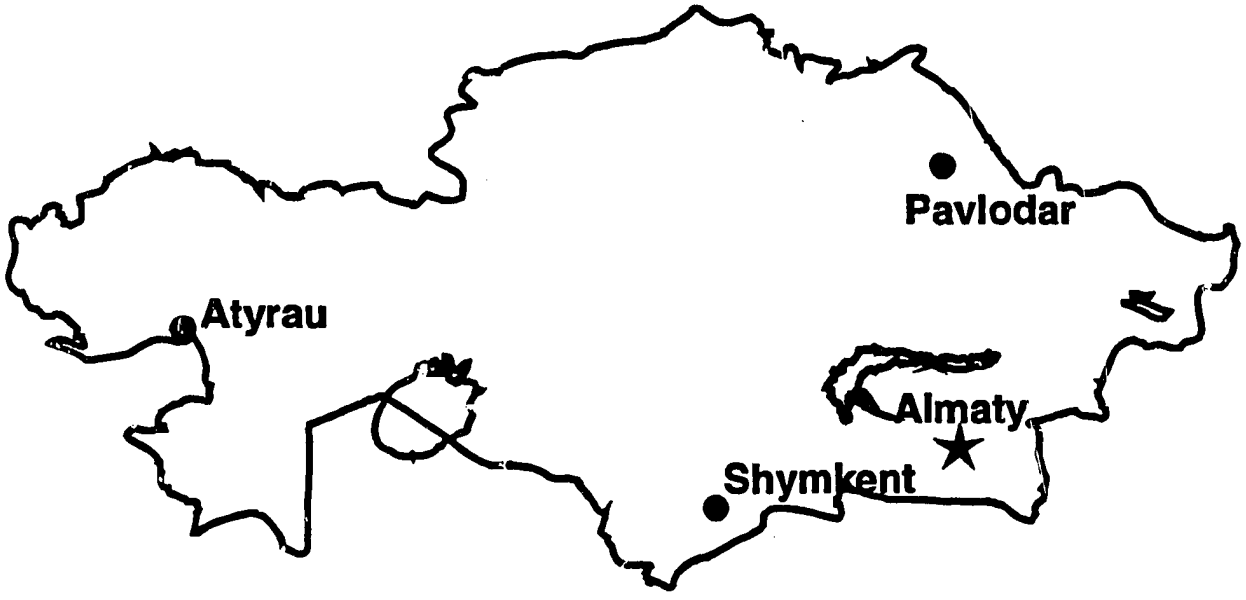

PREPARED BY JOHN BROWN, CHICAGO, ILLINOIS USA FOR

U.S. AGENCY FOR INTERNATIONAL DEVELOPMENT
NIS TASK FORCE - PETROLEUM PROGRAM
OFFICE OF ENERGY, ENVIRONMENT & TECHNOLOGY
WASHINGTON, D.C. 20523

Camp Dresser & McKee International, Inc.
Contract No. PCE-OOO1-1-00-2059-00

ECONOMIC AND TECHNICAL FACTORS OF THE KAZAKHSTAN PETROLEUM REFINING INDUSTRY

APRIL 1994

PREPARED BY JOHN BROWN, CHICAGO, ILLINOIS USA

300 SOUTH RIVERSIDE PLAZA
SUITE 1100
CHICAGO, IL 60606
(312) 669-7000

PROJECT DIRECTOR	-	MICHAEL W. LOEFFL
PROJECT MANAGER	-	ROBERT A. JURISH
PROCESS	-	ROBERT A. JURISH
ELECTRICAL	-	THOMAS J. DEMPSEY
INSTRUMENTATION	-	THOMAS J. DEMPSEY
MECHANICAL	-	THOMAS J. DEMPSEY
ENVIRONMENTAL	-	CHARLES BEST
ECONOMIST	-	BRONEK DUTKIEWICZ

U.S. AGENCY FOR INTERNATIONAL DEVELOPMENT
NIS TASK FORCE - PETROLEUM PROGRAM
OFFICE OF ENERGY, ENVIRONMENT & TECHNOLOGY
WASHINGTON, D.C. 20523

Camp Dresser & McKee International, inc.
Contract No PCE-0001-I-00-2059-00

JOHNBROWN

ECONOMIC AND TECHNICAL FACTORS OF THE KAZAKHSTAN PETROLEUM REFINING INDUSTRY

EXECUTIVE SUMMARY

I. INTRODUCTION
- A. THE USAID ENERGY EFFICIENCY AND MARKET REFORM PROJECT
- B. OBJECTIVES AND SCOPE
- C. METHODOLOGY AND ACTIVITIES

II. PETROLEUM REFINING INDUSTRY OVERVIEW
THE REFINERY INSTALLATIONS
1. ATYRAU REFINERY
2. PAVLODAR REFINERY
3. SHYMKENT REFINERY

III. ECONOMIC ANALYSIS OF THE KAZAKHSTAN PETROLEUM SECTOR
- A. INTRODUCTION
  1. SCOPE OF PROJECT
  2. METHODOLOGY
- B. PETROLEUM SECTOR OVERVIEW
  1. CRUDE OIL AND REFINED PRODUCT SUPPLY
  2. GEO-ECONOMIC CONSIDERATIONS
  3. DOMESTIC REFINED PRODUCT MARKETS
  4. INSTITUTIONAL FACTORS
- C. REFINERY FINANCIAL OPERATIONS
  1. CRUDE OIL PRICES
  2. OPERATING COSTS
  3. EX REFINERY PRICES
- D. Marketing and Distribution
  1. STRUCTURE AND OPERATIONS
  2. PRODUCT PRICING

IV. PRIVATIZATION ASPECTS
A. SECTOR RESTRUCTURING
1. CURRENT MASS PRIVATIZATION PROGRAM
2. MAJOR FACTORS INFLUENCING PRIVATIZATION

B. ISSUES AND OPTIONS FOR PRIVATIZATION
1. HORIZONTAL/VERTICAL INTEGRATION
2. COMPETITIVE POSITION OF REFINERIES

C. PRIVATIZATION IN OTHER COUNTRIES

V. TECHNICAL REFINERY - OPERATIONS
A. INTRODUCTIONS

B. ATYRAU REFINERY
1. SUMMARY DESCRIPTION OF THE REFINERY
a. Refinery Descriptions
b. Crude Oil and Other Feedstock Supply
c. Impact of Crude Oil Changes
2. DESCRIPTION OF PROCESS UNITS
a. Crude Unit
b. Catalytic Reformer
c. Other Units and Material Balances
d. Future Plans
e. Product Specifications
3. UTILITY SERVICES AND OFF SITES
a. Utility Consumption/Chemicals and Catalyst Use
b. Fuel System
c. Steam System
i. Steam Generation, Balance and Utilization
a. Steam Pressure Levels
b. Steam Users
ii. Condensate System
iii. Impact of Potential Energy Savings Projects on Steam Balance
d. Electric Power Systems
i. Electricity Sources and Generation
ii. Electric Distributing System
iii. Electric Power Users
e. Refinery Utility Systems - Plant Air

4. ENVIRONMENTAL CONSIDERATIONS
   a. **Fresh Waste Supply**
   b. **Water Treatment and Distribution**
   c. **Cooling Towers**
   d. **Tank Farm**
   e. **Quality of Local Environment**
   f. **Current Emission Controls**
   g. **Recommendations**
   h. **Summary of Environmental Survey**
   i. **Handling of Materials**
      i. Tetraethyl Lead (TEL)
      ii. Aromatics
      iii. Solvents
      iv. Halogenated Hydrocarbons
      v. Heavy Metals
      vi. Sulfur
      vii. Sulfuric and Hydrofluoric Acids
      viii. Combustion Products

5. OPPORTUNITIES FOR IMPROVEMENTS
   a. **Operation Improvement Opportunities**
      i. Immediate Opportunities
      ii. Medium-Term Opportunities
      iii. Long-Term Opportunities
   b. **Energy Improvement Opportunities**
      i. Energy Conservation Improvement Opportunities
      ii. Furnace Combustion Improvement Opportunities
      iii. Heat Conservation Improvement Opportunities
      iv. Steam System Improvement Opportunities
   c. **Emissions Control Opportunities**
      i. Immediate Opportunities
      ii. Medium-Term Opportunities
      iii. Long-Term Opportunities
   d. **Operation and Energy Efficiency Improvements**
      i. Immediate Opportunities
      ii. Medium-Term Opportunities
      iii. Long-Term Opportunities

e. **Environmental Emissions Reductions**
   i. Immediate Opportunities
   ii. Medium-Term Opportunities
   iii. Long-Term Opportunities
   iv. Future Work Required
   v. Further Environmental Work Required

6. **SUPPORTING PLANT DATA**
   a. **Thermal Energy**
      i. Heat Transfer Equipment
         a. Fired Heaters
         b. Heat Exchange
         c. Waste Heat Recovery
         d. Cost Effectiveness of Increasing Heat Transfer Surfaces
         e. Tracing and Temperature Maintenance Systems
      ii. Heat Rejection Systems
         a. Cooling Water Systems
         b. Air Cooling System
         c. Equipment, Piping and Steam Heat Losses
   b. **Mechanical Energy**
      i. Compressors and Fans
      ii. Pumps
      iii. Electric Motors
      iv. Steam Turbines
      v. Special Equipment
   c. **Energy Loss Monitoring**
   d. **Refinery Maintenance Practices (Miscellaneous Elect./Instr. & Mech. Details)**
      i. Policies
      ii. Overall Impressions
      iii. Process Unit Review
         a. Atmospheric/Vacuum Distillation Unit
         b. Catalytic Reforming Unit
         c. Coker & Calciner Unit
      iv. Shops, Spare Parts and Inventory Control

C. PAVLODAR
1. SUMMARY DESCRIPTION OF THE REFINERY
a. Refinery Descriptions
b. Crude Oil and Other Feedstock Supply
c. Impact of Crude Oil Changes
2. DESCRIPTION OF PROCESS UNITS
a. Crude Unit
b. Catalytic Reformer
c. Other Units and Material Balances
d. Product Specifications
3. UTILITY SERVICES AND OFF SITES
a. Utility Consumption/Chemicals and Catalyst Use
b. Fuel System
c. Steam System
i. Steam Generation, Balance and Utilization
ii. Steam Pressure Levels
iii. Steam Users
iv. Condensate System
v. Impact of Potential Energy Savings Projects on Steam Balance
d. Electric Power Systems
i. Electricity Sources and Generation
ii. Electric Distributing System
iii. Electric Power Users
e. Other Utilities
4. ENVIRONMENTAL CONSIDERATIONS
a. Fresh Waste Supply
b. Water Treatment and Distribution
c. Cooling Towers
d. Tank Farm
e. Environmental Considerations
f. Quality of Local Environment
g. Current Emission Controls
h. Recommendations
i. Summary of Environmental Survey
i. Refinery Sulfur Balance
ii. Air Emissions
iii. Water Quality
iv. Solid Waste Disposal
v. Impact of Maintenance Practices on Generating Emissions
vi. Non-Aqueous Evaporation Losses
vii. Loss of Products to Solvents

j. **Handling of Materials**
   i. Tetraethyl Lead (TEL)
   ii. Aromatics
   iii. Solvents
   iv. Halogenated Hydrocarbons
   v. Heavy Metals
   vi. Sulfur
   vii. Sulfuric and Hydrofluoric Acids
   viii. Combustion Products
   ix. Tars

5. **OPPORTUNITIES FOR IMPROVEMENTS**
   a. **Operation Improvement Opportunities**
      i. Immediate Opportunities
      ii. Medium-Term Opportunities
      iii. Long-Term Opportunities
   b. **Energy Improvement Opportunities**
      i. Energy Conservation Improvement Opportunities
      ii. Furnace Combustion Improvement Opportunities
      iii. Heat Conservation Improvement Opportunities
      iv. Steam System Improvement Opportunities
   c. **Emissions Control Opportunities**
      i. Immediate Opportunities
      ii. Medium-Term Opportunities
      iii. Long-Term Opportunities
   d. **Operation and Energy Efficiency Improvements**
      i. Immediate Opportunities
      ii. Medium-Term Opportunities
      iii. Long-Term Opportunities

e. **Environmental Emissions Reductions**
i. Immediate Opportunities
ii. Medium-Term Opportunities
iii. Long-Term Opportunities
6. SUPPORTING PLANT DATA
a. **Thermal Energy**
i. Heat Transfer Equipment
a. Fired Heaters
b. Heat Exchange
c. Waste Heat Recovery
d. Cost Effectiveness of Increasing Heat Transfer Surfaces
e. Tracing and Temperature Maintenance Systems
ii. Heat Rejection Systems
a. Cooling Water Systems
b. Air Cooling System
c. Equipment, Piping and Steam Heat Losses
b. **Mechanical Energy**
i. Compressors and Fans
ii. Pumps
iii. Electric Motors
iv. Steam Turbines
v. Special Equipment
c. **Energy Loss Monitoring**
d. **Refinery Maintenance Practices (Miscellaneous Elect./Instr. & Mech. Details)**
i. Policies
ii. Overall Impressions
iii. Process Unit Review
a. Light Oil Combination Unit
b. Heavy Oil Combination Unit
c. Crude Station/Pipe Line Station
iv. Shops, Spare Parts and Inventory Control
v. Meteorological Data

D. **SHYMKENT**
1. SUMMARY DESCRIPTION OF THE REFINERY
a. **Refinery Descriptions**
b. **Crude Oil and Other Feedstock Supply**
c. **Impact of Crude Oil Changes**

2. DESCRIPTION OF PROCESS UNITS:
   a. **Crude Unit**
   b. **Catalytic Reformer**
   c. **Other Units and Material Balances**
   d. **Product Specifications**
3. UTILITY SERVICES AND OFF SITES
   a. **Utility Consumption/Chemicals and Catalyst Use**
   b. **Fuel System**
   c. **Steam System**
      i. Steam Generation, Balance and Utilization
      ii. Steam Pressure Levels
      iii. Steam Users
      iv. Condensate System
      v. Impact of Potential Energy Savings Projects on Steam Balance
   d. **Electric Power Systems**
      i. Electricity Sources and Generation
      ii. Electric Distributing System
      iii. Electric Power Users
   e. **Other Utilities**
4. ENVIRONMENTAL CONSIDERATIONS
   a. **Fresh Waste Supply**
   b. **Water Treatment and Distribution**
   c. **Cooling Towers**
   d. **Tank Farm**
   e. **Environmental Considerations**
   f. **Quality of Local Environment**
   g. **Current Emission Controls**
   h. **Recommendations**
   i. **Summary of Environmental Survey**
      i. Refinery Sulfur Balance
      ii. Air Emissions
      iii. Water Quality
      iv. Solid Waste Disposal
      v. Impact of Maintenance Practices on Generating Emissions
      vi. Non-Aqueous Evaporation Losses
      vii. Loss of Products to Solvents
5. OPPORTUNITIES FOR IMPROVEMENTS
   a. **Operation Improvement Opportunities**
      i. Immediate Opportunities
      ii. Medium-Term Opportunities
      iii. Long-Term Opportunities

b. **Energy Improvement Opportunities**
   i. Energy Conservation Improvement Opportunities
   ii. Furnace Combustion Improvement Opportunities
   iii. Heat Conservation Improvement Opportunities
   iv. Steam System Improvement Opportunities
c. **Emissions Control Opportunities**
   i. Immediate Opportunities
   ii. Medium-Term Opportunities
   iii. Long-Term Opportunities
d. **Operation and Energy Efficiency Improvements**
   i. Immediate Opportunities
   ii. Medium-Term Opportunities
   iii. Long-Term Opportunities
e. **Environmental Emissions Reductions**
   i. Immediate Opportunities
   ii. Medium-Term Opportunities
   iii. Long-Term and Further Environmental Work Required

6. **SUPPORTING PLANT DATA**
   a. **Thermal Energy**
      i. Heat Transfer Equipment
         a. Fired Heaters
         b. Heat Exchange
      ii. Waste Heat Recovery
      iii. Cost Effectiveness of Increasing Heat Transfer Surfaces
      iv. Tracing and Temperature Maintenance Systems
      v. Heat Rejection Systems
         a. Cooling Water Systems
         b. Air Cooling System
         c. Equipment, Piping and Steam Heat Losses
   b. **Mechanical Energy**
      i. Compressors and Fans
      ii. Pumps
      iii. Electric Motors
      iv. Steam Turbines
      v. Special Equipment
   c. **Energy Loss Monitoring**

d. **Refinery Maintenance Practices (Miscellaneous Elect./Instr. & Mech. Details)**
   i. Policies
   ii. Overall Impressions
   iii. Process Unit Review
      a. Light Oil Combination Unit
      b. Crude Transfer Station

APPENDICES

A. TERMS OF REFERENCE
B. THE REFINERY QUESTIONNAIRE
C. REVIEW OF COAL UTILIZATION TECHNOLOGIES
D. ABBREVIATIONS
E. ENERGY COMPARISONS
F. OPERATING COSTS
G. PROCESS SIMULATION ADVANTAGES

ECONOMIC AND TECHNICAL FACTORS OF THE KAZAKHSTAN PETROLEUM REFINING INDUSTRY

EXECUTIVE SUMMARY

I. INTRODUCTION

The overall document titled ECONOMIC AND TECHNICAL FACTORS OF THE KAZAKHSTAN PETROLEUM REFINING INDUSTRY, contains this Executive Summary along with the detailed sections of the report. Included is a review of the current Kazakhstan economic situation, a discussion of the specific economic conditions of the Petroleum Sector and an economic overview or characterization of the country's three oil refineries.

Further, there is a review of Technical Refinery Operations, including a summary and listing of operational, energy efficiency, and environmental improvements available to three specific refineries. Detailed evaluation information collected during the refinery visits is presented along with subsequent analysis and rationalization of the data and the Appendices for this report.

This report describes the work performed for the U.S.AID NIS (Newly Independent States) Petroleum Refinery Program for Kazakhstan. It details the results of an economic analysis of the Kazakhstan petroleum sector, including a characterization and evaluation of individual refineries located in Shymkent in the south central region, Pavlodar in the northeast, and Atyrau in the west part of the country. The overall goal of the work was to assist in the privatization of the petroleum sector by:

- Providing information for preliminary investment decisions.
- Providing an understanding of needed improvements for the existing installations that will increase technical and financial performance.
- To support and assist the lending appraisals of international lending institutions, such as the World Bank and EBRD.

A team of John Brown refinery specialists visited the existing three refineries and collected data from other sources (such as Kazakhstanmunaygaz and Ministry officials) within the country during November 1993.

The team included refinery process, mechanical/electrical/instrument, environmental engineers and a petroleum economist to evaluate related economic and marketing issues. The objectives of this team were to:

- Characterize the current operating status (including energy consumption, operational and environmental improvement potential) and economic performance of the petroleum refining industry.

- To review the broader economic parameters of the petroleum sector in the context of suggesting factors that should be considered by others to identify the privatization alternatives.

The field activities consisted of process and visual inspection reviews of selected units with members of the refinery engineering, operations, and management staff. Kazakhstan refinery counterparts participated in these activities. In addition to a "process unit", or systems approach to analysis, the team viewed the refinery from an overall mechanical, electrical and instrumentation perspective. The team acquired process data needed for further evaluation in the John Brown Chicago office. Opportunities for energy efficiency and operational improvements, and reduction of emissions for the three audited refineries were developed. The report further classifies potential modifications in accordance with the magnitude of effort and capital requirements anticipated.

The selection of the Shymkent in the south, Pavlodar in the northeast, and Atyrau in the west, which are the three refineries in the country considered in the study, was set by agreement among U.S.AID, The National Oil Company, Kazakhstanmunaygaz, and John Brown in October 1993. Based on a national Kazakhstan nominal crude processing capacity of 20 million mta, the Shymkent and Pavlodar enterprises process 37.5 percent each and Atyrau 25 percent of the total material refined in the country. The three refineries cumulatively supply over 70 percent of the country's petroleum needs. Atyrau receives crude oil from local oil fields in western Kazakhstan, while Pavlodar and Shymkent are supplied with western Siberian crude oil via pipelines from Tyumen in Russia. Shymkent also processes 1 million tonnes of crude oil from the Kumkol Region in Central Kazakhstan, which is received from the same pipeline that provided the western Siberian feedstock.

II. ECONOMIC ANALYSIS OF THE PETROLEUM SECTOR

While Kazakhstan is a net exporter of crude oil, the domestic refineries have been facing crude oil supply problems at the time of the visit. The use of Kazakhi crude oil in the domestic refineries is severely limited by the geographical structure of the crude oil pipeline system that the country inherited with the dissolution of the Former Soviet Union (FSU). The major oil fields, situated in the northwest region of Kazakhstan, are linked by pipeline to the refinery at Atyrau and to the crude oil pipeline system which is connected directly to the north in Russia. The two eastern refineries at Pavlodar and Shymkent are linked by pipeline access to the western Siberian oil fields and are not directly linked to the western Kazakhstan fields. This limitation has led to a trade agreement between Russia and Kazakhstan, whereby Kazakhstan crude oil from the western oil fields is exchanged for Siberian crude oil in the east. This inter-republic agreement, however, has not worked as smoothly as expected, and the two eastern refineries have been facing Russian crude oil import disruptions. This has resulted in temporary shutdowns at both Pavlodar and Shymkent. These disruptions were reported to have been triggered by the inefficiencies in the banking system which resulted in delays of payment between Kazakhstan, the Central Bank in Moscow and the oil producing agencies in Siberia. The expectations are that with the improvement of the banking system in both countries, this problem should disappear over time after conversion by Kazakhstan to a National currency (which occurred in November 1993).

Apart from the crude oil disruptions, the refineries appear to be fiscally sound, though operating in a very high inflation environment. The refineries are operating under a standardized cost-plus product pricing system and appear to be able to pass through crude oil and operating cost increases on a routine and expeditious manner. The current cost-plus product pricing system does not provide incentives for improvements in refinery efficiency, nor does it allow the optimization of production economics based on market consideration.

Whatever the shortcomings of the current system in providing pricing incentives for operating efficiency improvements the refineries appear to be well served by the system in providing an operational structure during the highly volatile transition period that the petroleum sector is currently facing.

All three refineries currently have low operating costs due to low crude oil prices and appear to have operating costs well in line, proportionally, with similar refineries in the west.

Manpower utilization by the refineries is only slightly higher than would be expected in international operations and at current wage rates does not pose an economic burden. Taking into consideration the future refinery expansion needs of the country will, in all probability, result in an increasing demand for qualified experienced labor. This potential labor shortage would suggest that personnel training in refinery operation skills (especially economic and planning disciplines) should be a near-term priority.

Specific training and exposure that is needed as the petroleum sector moves to market economics, for both refinery and ministry staff, include:

- Economics and Planning
  - Operations planning, including use of Linear Program Analysis.
  - Investment planning, capital budgeting.
  - Price setting in the free market economics.
  - Product Profitability Analysis.
- Technical and Operations
  - Efficient operation of fired heaters.
  - Application, selection and maintenance of steam traps.
  - Effective use of insulation: its economics and applications.
  - Computer simulation of distillation, unit operations and refinery operations.
  - Environmental sensitivity.
  - Exposure to western refining technology.
  - Operator and management training for future growth. (The refineries are doing much of this themselves.)

Additionally, as the refining sector moves to a more integrated competitive free-market structure, it will be imperative that petroleum refinery operations be more cognizant of the downstream markets for their products and recognize the competitive forces from alternative energy sources such as coal and natural gas. An integrated resource plan, taking into account the many options facing the petroleum sector and the other energy alternatives under free-market conditions, is urgently needed to guide both current operations and future investment needs.

The current institutional structure of the industry, which separates the refineries under one company, Kazakhstanmunaygaz (KMG), from the marketing and distribution which is under another organization, Kazakhstanefteproduct (KNP), and the overall planning functions at the Government level, impedes the efficiency of the sector as a whole. This horizontally segregated structure probably leads to substantially larger inefficiencies than are to be found at the technical operational level of the refineries.
For example, all three refineries express the need for minimizing the quantity of heavy fuel oil (mazut) produced and have installed, or are planning to install, bottoms upgrading facilities. Meanwhile, the marketing company and the power sector (the major consumer of mazut) are predicting increased mazut demand and are currently resorting to imports of mazut from Russia.

Current marketing and distribution margins are very high amounting to about 200 percent of ex-refinery prices, which is well out of line with most market-oriented countries and with international markets. This apparent inequity between refining and marketing margins is of concern to the refineries. It would appear that this inequity results from several factors. Ex-refinery prices are relatively low due to low crude oil acquisition costs. Market prices, on the other hand, are high due to the inclusion of high-priced imports in the national average price and high distribution expenses. These disparities should decrease as crude oil prices increase to world levels and when price controls are eliminated.

Kazakhstan's cross order trade in crude oil and petroleum products currently amounts to over 200 percent of domestic petroleum consumption and is likely to increase in the future. This high trade level, made up of both imports and exports of crude oil and products, results from a number of factors. These are a) the direct allocation of expert permits to the refiners as a means of generating hard currency for current operational needs; b) quota import agreements from Russia; c) additional imports to satisfy immediate shortages; d) the pledging of crude oil and products in payment for investments; and e) crude oil swaps for logistic reasons. This increasing cross-border

trade has both positive and negative implications. On the one hand, the special interest and/or barter deals lead to hidden transactions and inefficiencies that may not always be in the national interest. For example, the export of products by rail into western Europe and the export of coke at below production cost may generate foreign capital for the refineries, but may be a less than efficient utilization of natural resources.

On the other hand, the large cross-border trade is already leading to defacto liberalization of the domestic petroleum markets and leading to synergies through integration with Kazakhstan's neighbors.

The experience in many countries in transition to a free-market structure has been a marked reluctance to open the domestic petroleum markets to international trade. This is not the case in Kazakhstan.

While the current refinery pricing policy based on the production cost pass-through seems to be serving the refineries well, it results in disincentives to cost-driven improvements. With profits fixed at a fixed percentage of operating cost and employees wages and bonuses coming out of profit, there is little incentive to reduce costs. Obviously, the current pricing system of refinery cost pass-through does not foster efficient economic operation of the refineries.

The National Privatization Program is well under way and has entered the third phase of privatization of larger enterprises having under 5 000 employees. In parallel with this effort, special attention is being given to the refining industry as a whole and also to the Pavlodar Refinery Enterprise specifically. Current considerations are for the initial privatization of the refineries as subsidiary joint stock companies under Kazakhstanmunaygaz as the sector's State Holding Company. The separate privatization of the Pavlodar Refinery Enterprise as a subsidiary of a diversified State Holding Company (KRAMBS) is under consideration. The final structure of the sector, however, has not yet been decided upon. Some factors currently under consideration are: a) the need for a strong National Oil Company with international presence in view of Kazakhstan's future oil export potential; and b) the need for vertical integration between production, refining and marketing.

Future Objectives

Prior to independence, Kazakhstan had very ambitious expansion plans for new refinery capacity and ancillary equipment based on a strong forecasted growth rate for petroleum products. A number of major projects were already under construction and new refineries were under consideration. During the last two years, domestic consumption has declined significantly due to the economic downturn, and is not likely to return to previous levels before the end of the decade. At the same time, independence has redefined the natural markets for the existing refineries and a refinery overcapacity situation has developed to the north in Russia. These changes give Kazakhstan a respite from the immediate need for new capacity and should allow the country to re-evaluate and prioritize the future investment needs. Current investment plans of Kazakhstanmunaygaz plus observations related to energy savings, based on this report for the refining and marketing area, are estimated to exceed US $6 billion as shown in the following table.

CAPITAL INVESTMENT REQUIREMENTS ESTIMATE[1]

PROJECT	COST MILLION US $	DEDICATED OIL SALES THOUSAND MTA
A. TRANSPORTATION AND LOGISTICS	1 915	
Tengiz/Novorossiyk Crude Line	1 500	
B. REFINERIES		
Mangistau Heavy Oil Refinery	1 500	1 000
Atyrau Refinery	1 560	900
Shymkent Refinery	430	
Pavlodar Capacity Expansion	280	
Crude Stabilization - Janjorski	270	510
C. MARKETING AND DISTRIBUTION	230	
D. OTHER INVESTMENTS NEEDS		
Refinery Storage (Crude) (60-90 days)	180	
TOTAL	6 360	2 410

[1]The majority of these projects are pre-independence related. A re-evaluation of these proposed activities is needed.

A re-evaluation of the supply and demand balance, including the potential of imports and exports, is urgently needed to justify investment needs. The role of mazut, a key product

in the overall energy picture, should be carefully re-evaluated due to the current divergence of opinion on its demand by the refiners who expect future demand to drop, and the consumers (primarily the power sector) who expect demand to increase.

It is generally recognized by both the Government and the refiners that petroleum prices, margins and other Government controls should be liberalized to result in a free market-driven petroleum economy. Decontrol of fuel prices by January 1994 was a conditionality of the IMF agreement, which was postponed due to Kazakhstan's current economic difficulties. The rate at which petroleum price can be decontrolled will depend in a large measure on the rate of price liberalization of the petroleum industry to the north in Russia, with which the Kazakhstan industry is intertwined. The existing cost plus pricing system may have to be retained until the country is ready for decontrol of the whole system, especially at the retail level.

The privatization of State controlled oil companies are being carried out in a number of countries around the world today. The most often cited examples are that of Argentina, Chile and Peru (in Latin America); Britain and France (in Europe); Morocco and Pakistan. While each of these countries has specific considerations, they all share a common objective of restructuring their petroleum sector companies in order to increase the efficiency of their domestic industries, so as to give the least cost supply of petroleum products for the domestic market. Kazakhstan is fairly unique, in addition to the need to restructure the existing industry it is also in the early stages of the development of a rapidly growing oil industry based on expanding domestic oil production. The objectives of the privatization in addition to increasing the efficiency of the domestic industry, should thus be to buildup an international perspective and expertise commensurate with its future oil exports, and to attract capital for sizable expansions in production, refining and marketing.

The experience with privatization programs in other countries suggest a number of factors that may be applicable to the Kazakhstan situation.

Experience indicates that a careful preparation of the whole petroleum sector for privatization is needed to avoid costly mistakes, especially as far as the refining industry is concerned. The recent experience of the successful privatization of Yaciementos Petroliferos Fiscales (YPF) in Argentina is a positive example of the preparation needs; as opposed to the difficulties being experienced with ad hoc privatization in other countries such as Morocco. The development of a well thought out strategy for the privatization for the whole petroleum sector and the preparation of the individual enterprises to be privatized is deemed to be extremely important. The question of whether the individual enterprises need to be restructured, upgraded, or otherwise improved prior to privatization or left to the privatized company is an important consideration especially for a capital intensive industry such as refining.

Equally important is the definition of the Government's role after privatization and the creation of an environment conducive to market driven competition. This includes the liberalization of price controls and margins, opening of access to foreign and domestic markets, definition of access and control of the natural monopolies such as the pipelines and other distribution infrastructure, definition of special subsidies and/or taxes. All of these are prerequisites for attracting foreign capital and participation.

There are a number of national issues (both policy and economic) that will influence the privatization route to take the eventual structure of the industry. Among these are a) the desirability of building up a strong Kazakhstan oil company as a means of leveraging the exploitation of the country's oil resources internationally, and b) the choice of whether or not to geographically integrate the domestic petroleum sector which today is, in reality, made up of three distinct geographical regions.

International Oil Industry Factors

Many of the oil producing countries have historically established National Oil Companies (NOC) to exploit their domestic oil reserves. Today there are close to 100 NOCs, and 27 of the top 50 oil and gas companies in the world are NOCs. The economic efficiency of most of these NOCs has been poor and has led to the current round of oil sector privatization worldwide. The major problems are that the NOCs in many countries have been considered as a cash generator by the Government and/or a vehicle for social and political agendas. This generally conflicts with the efficient management of oil resources and results in the accumulation of debt by the companies; the imposition of subsidies, protection mechanisms, bloated labor forces and other distortions, all of which contribute to higher costs to the consumer. On the positive side, the NOCs do, if properly used, facilitate the exploitation and export of the country's crude oil into an international market. Many of the NOCs are currently using their strength to integrate downstream into refining and marketing in foreign markets. Examples of this are the push downstream by Saudi Arabia through the Star joint venture with Texaco and with joint ventures in Japan and the Philippines, Venezuela's acquisition of refining capacity on the U.S. Gulf Coast; and the Kuwait National Oil Company expansion into marketing in Europe.

The other extreme to the establishment of an NOC is the complete privatization of the petroleum sector, which can lead to the entry and domination of the sector by the international oil companies, unless protected by adequate antitrust laws. An intermediate route between these two extremes, having both private and state controlled companies working in tandem, is difficult to conceive and operate. There are, however, a number of examples where this has worked successfully. The establishment and growth of Elf-Aquitaine in France is one such example. From its origins as the operator of the modest Lacq gas fields in southern France in the 1960s, Elf has grown to a major international oil company under Government tutelage. Another example of joint state and private

enterprise development of major oil resources is the example of Staatoil in Norway. Both of these examples of concurrent state and private enterprise development of oil resources may be pertinent to the Kazakhstan situation.

Domestic Industry Structure

Even though the Kazakhstan petroleum sector is currently integrated and under Central Government control, there are a number of distinct divisions in the petroleum sector. Firstly, the country is made up of three distinct and distant geographical markets served by its own refineries - Atyrau in the northwest, Pavlodar in the northeast and Shymkent in the south central region. Secondly, there is no linkage between the major oil fields in western Kazakhstan and the eastern refineries and markets (accounting for 70 percent of the total). Thirdly, the current institutional structure divides the petroleum sector horizontally between exploration and production, and refining under Kazakhstanmunaygaz, and marketing and distribution under Kazakhstanefteproduct. The question of whether this structure should be perpetuated, or whether the industry should be restructured and integrated, is a major factor to be considered.

The decision on whether to link the western oil fields to the eastern refineries with a crude oil pipeline (currently under consideration) is a major fundamental factor. Linkage would have a number of advantages including: a) the removal of the disruptions and uncertainties of relying on Siberian oil imports, b) maximize the use of domestic crude oil resources, c) utilization of refining capacity currently under construction, and d) allowing national geographical integration of the petroleum sector.

Experience in other countries has shown that most companies are either already vertically integrated or are moving in that direction, where possible. The major oil exporting NOCs are moving downstream, integration into refining and marketing as a means of moving their crude oil. In some cases they are even integrating, more closely, their production and marketing sectors as demonstrated by the recent merger of ARAMCO and Samarec in Saudi Arabia.

Most major western oil companies are already integrated to the extent possible. While there are numerous examples of oil production companies and a few examples of pure marketing companies of any significance, stand-alone refineries are very rare. There are a number of reasons for this. In the international petroleum industry, the tax treatment of profits is usually more favorable at the wellhead than for processing or marketing of oil products, which has resulted in the movement of profits to the wellhead. The resulting low profitability combined with the very high capital requirements for refining, make the stand-alone refinery a relatively high risk commercial venture. Refining, even when integrated with oil production and/or marketing is currently viewed as a necessary evil for moving crude oil to market. Many of the integrated major oil companies have closed down or divested their marginal refineries.

In Kazakhstan today, the profitability of oil production, refining and marketing are centrally dictated through the application of the cost-plus pricing system. Under this system, refining and marketing are attractive low-risk operations. However, under a free market pricing system, prices would tend toward international prices, putting pressure on refining and marketing profits. A number of countries (Morocco, Pakistan, Chile) have stand-alone State refining companies and are currently facing the difficulties of the transition to free market economics. In Argentina during the recent privatization, there was great difficulty in attracting participation in the refineries, even though the Government had spent a significant amount in capital improvements prior to privatization. The experience with the transition of the marketing and distribution sector from a state-controlled monopoly to private participation, has been an excess rather than a lack of private interest, especially on the part of the major international companies. This has not been a major problem if properly managed through the limitations of market share and the qualification of participant.

The Kazakhstan refinery industry differs from most of the other eastern European and NIS countries in a number of important aspects.

- The refineries are relatively modern having been built in the 1970s and 1980s. (With the exception of the original crude unit Atyrau, most of which has been shutdown.)

- The refineries have no apparent serious environmental problems, which could pose clean-up costs and liability risks. (The remediation of surface ground contamination at Atyrau has yet to be quantified monetarily.)

- The country is short of refining capacity (for the future) and the existing refineries have potentially low-cost expansion facilities under construction.

- The refineries are part of rapidly expanding domestic oil industry based on expanding crude oil production.

- The refineries have access to crude oil at prices substantially below world market prices, which give the refiners a temporary window of opportunity until Kazakhstan oil prices rise to world levels.

The refinery industry is, however, facing very significant capital investment requirements in the near term. These capital needs cannot be met from refinery revenues neither under the current pricing system nor under a free market system, hence they will have to attract capital resources either from the State or from private sources. Given the range of expansion plans and major investment requirements, the current privatization plans are critical to setting a proper foundation for the future expansion of the industry.

In summary, there are a number of national issues (both policy and economic) that must be dealt with to optimize the privatization process. In particular, Kazakhstan needs to define whether it wants to be a factor outside its borders through the development of a

significant Kazakhstan Oil Company with international ambitions. This will require significant capital and manpower resources. Secondly, domestically Kazakhstan should first decide whether it wants to integrate the three regional markets and to what extent it should be involved supplying its immediate neighbors. Thirdly, the domestic petroleum sector must be optimized in an integrated manner with the alternative energy sources (coal, gas, and other power sources).

III. CRUDE SUPPLY SITUATION

Kazakhstan produced 25.7 million tonnes in 1992 from indigenous oil fields in western Kazakhstan and Central (Kumkol) regions of the country. Total domestic consumption amounted to 15.6 million tonnes per year of petroleum products. Prior to the dissolution of the Former Soviet Union (FSU), the western Kazakhstan oil fields were totally integrated with the Russian oil markets to the north. Meanwhile, the two refineries (Pavlodar and Shymkent) in the east of Kazakhstan, which supply about 70 percent of the Kazakhstan market, were directly tied into the Siberian oil fields to the north, with no access to the western Kazakhstan oil fields. This logistical transportation infrastructure and shortages of refining capacity, resulted in Kazakhstan exporting 23.6 million tonnes of crude oil in the west; and importing 11.3 million tonnes of crude oil and 4.2 million tonnes of product in the east. Thus, net oil exports in 1992 amounted to some 8.1 million tonnes.

The Ministry of Energy and Fuel Resources forecasts that crude oil production will increase to 33.5 million tonnes by 1995 and 51.4 million tonnes by the year 2000. The net export of crude oil is only forecast to increase to 11 million tonnes by the year 2000. This figure is, however, predicated on the basis of a high domestic consumption pattern.

The Kazakhstan petroleum sector currently obtains about 75 percent of its crude oil supply from Russia. The other source is from indigenous oil fields in western (4.5 million mta to Atyrau) and Central Kazakhstan (1 million mta to Shymkent).

Kazakhstan and other former Soviet Union oil markets were totally integrated prior to the dissolution of the U.S.S.R. The 1993 supply interruptions of Russian crude to Kazakhstan was the result of monetary exchange issues between the two nations. The growing Kazakhstan availability of local crude oil supply and the resulting economic advantage strongly support the installation of a pipeline from western Kazakhstan to the refineries and larger markets in the east.

Kazakhstan produces crude oil at several locations, although the predominant oil producing region is in the western part of the country. The Atyrau Refinery processes this material. Additional crude oil production originates from the Kumkol field in the Central Region, which is processed by the Shymkent refinery. Approximately 5.5 million metric tonnes per year of Kazakhstan crude is refined nationally. Indigenous Kazakhstan crude represents about 25 to 30 percent of the total crude refined over the past several years. Domestic oil production has been increasing steadily and this trend is likely to continue with development of the western Kazakhstan oil fields.

Crude oil is supplied by Russia from western Siberia and constitutes the major source of oil (70 percent) processed by the Kazakhstan refineries. The pipeline enters Kazakhstan from the north and feeds the Pavlodar refinery. This pipeline combines with a spur line from the centrally located Kumkol field and continues on to the Shymkent Refinery. At this point in time, the Kazakhstan petroleum sector is dependent on Russia to supply the majority of its domestic oil needs.

The development of the western Kazakhstan oil fields coupled with disruptions of supply from Russia, along with other economic factors and National Policy regarding the future configuration of the petroleum industry, most likely will lead to a pipeline connection from western to eastern Kazakhstan.

IV. FUTURE OIL PRODUCT DEMAND PROJECTIONS

Due to the uncertainty of the future Kazakhstan economic situation, it is impossible to accurately predict long-term demand patterns at this time. However, local Ministry staff feels that 1993 levels reflect a bottom out of the demand and a moderate growth back to former demand by the end of the century.

Total domestic consumption of petroleum products amounted to 19.6 million tonnes in 1990. With the post independence economic slowdown consumption dropped 7 percent in 1991 to 18.3 million tonnes, and a further 15 percent to 15.6 million tonnes in 1992. In 1993 while the GDP declined by 15 percent, fuel consumption did not decline appreciably. The Ministry of Energy staff feels that consumption levels have bottomed out as most of nonessential uses have now been curtailed, and that a large percentage of current consumption is tied into nonelastic agricultural uses.

Prior to the current economic downturn, a healthy consumption growth rate of 8 percent per year was being projected for the rest of this decade. The Ministry of Energy was forecasting total domestic consumption to increase from 15.6 million tonnes in 1992 to 18.1 million tonnes in 1995 to approach 36.8 million tonnes by the year 2000. After current downturn, the current feeling is that near-term growth will be very modest, only coming back to 1992 levels by the year 2000.

It should be noted that there exists considerable uncertainty in the petroleum sector forecasts, which is to be expected with an uncertain outlook for economic growth and the many structural changes taking place as far as supply and demand is concerned.

V. TECHNICAL REVIEW OF CURRENT OPERATIONS

INTRODUCTION

The Kazakhstan refining industry has been in operation for nearly 50 years. The industry consists of three refineries located throughout the country. The Atyrau facility, located in the western part of the country, is the oldest that was built near indigenous Kazakhstan crude sources. The Pavlodar and Shymkent refineries are located in the northeast and south central east, respectively. The original Atyrau facility was commissioned in 1945 as part of the World War II era Lend Lease Program, with current operating units commissioned between 1968 and 1989. Pavlodar was commissioned in 1978 and Shymkent in 1985.

The Pavlodar and Shymkent refineries are generally in good condition, with Atyrau most in need of modernization.

The Kazakhstan refineries generally consist of two units, one a simple, hydroskimming-type process configuration, including Crude (some including Vacuum Distillation), Semi-Regenerative Catalytic Reforming (with upstream Naphtha Hydrotreating capability), and Distillate Hydrotreating Units. The second unit, a heavy oil combined unit, consists of a Vacuum Gas Oil Hydrotreater, FCC and Gas Concentration Sub-Units. Pavlodar's Heavy Oil Unit is operating and Shymkent's is partially built and is under a feasibility study for possible completion. Atyrau contains only the first type, oil hydroskimming, however, with no desulfurization capability. All facilities have Delayed Cokers, with only Atyrau and Pavlodar having calcining capability; also, Pavlodar does have a Visbreaker. The Kazakhstan refineries utilize no Hydrocracking, Alkylation, Catalytic Polymerization, or Merox (mercaptan oxidation / sweetening) technologies.

With the exception of Atyrau, with two Crude Distillation Units, there are no other duplicate processing units, thus limiting, in general, operating flexibility in this respect.

The refining units are reported to have tested operating turndown ratios in the 50 to 110 percent range. The Pavlodar Crude Unit was running at 40 percent of rated capacity during our visit.

Equipment limitations further contribute to refinery operating problems. Crude oil storage capacity is 6-7 days (rated at capacity), at most, per refinery. There were minimal on-line process analyzers observed. Certain major equipment installations are unlike those found in most modern refineries. For example, steam turbine drivers are not generally used and were only noted in isolated services. Minimal use of centrifugal compressors was also evident. Reciprocating compressors, with their more frequent maintenance requirements, are typically utilized. Compounding the problem is a severe shortage of spare parts. Most of the installed equipment was manufactured in the Soviet Union. Since the dissolution of the U.S.S.R. and discontinuation of certain Soviet manufacturing operations, Kazakhstan has had to look elsewhere for spare parts. These items require foreign exchange and/or long delivery schedules, therefore, many of the critical parts are manufactured by the machine shops within each individual refinery. These "home-made" parts, while a credit to the refineries ingenuity, in many cases do not have the operating life of original components, which leads to production loss from increased downtime.

The installation and maintenance of modern mass flow measurement instrumentation is needed to collect reliable and consistent operating information, such as specific process unit yields and utility consumptions. Analysis of this type of detailed information would allow the refineries to determine the impact of potential upgrading decisions, or to compare operating information to similarly configured market-driven facilities. The operating staff at the refineries clearly recognize the need for better instrumentation but lack the funds or motivation to effect a change. It should be stated that we did see cases of excellent flow measurement systems, the Pavlodar Crude Oil Transfer Station for example.

The Kazakhstan petroleum sector is in need of restructuring. Centrally planned decisions have put the current oil refining industry at a competitive disadvantage compared to market-driven facilities. Capital infusion is necessary to bring the petroleum refining industry to modern, western standards. Currently, neither centrally-planned nor market-driven decisions are being made.

Kazakhstan does have the natural resources to generate the capital needed for its expansion or modernization plans. However, these resources need to be developed. The country is predicted to have a future excess of crude oil. Additionally, Kazakhstan has identified gas fields, coal, iron, copper, gold and other developable mineral resources. Chevron, Mobil and other Western oil companies are working on a major exploration/production project in the western Kazakhstan oil fields. Crude oil production is expected to satisfy internal demand and result in export of significant excess by the year 2000. As is well known, a pipeline to move this oil to the west is planned as part of this activity, with the exact routing as of yet unspecified.

Significant savings in energy can be achieved through modification and installation of equipment, which would require moderate capital and have excellent payback. The additional fuel made available as a result of implementing these changes can be sold, either internally within the country (which would reduce heavy fuel oil imports and costs) or exported for hard currency (recall that mazut is of relatively good quality, low sulfur in nature).

Pavlodar and Shymkent are newer facilities, generally in better condition than Atyrau. All three locations can benefit from implementing energy saving projects. Shymkent's movement to complete its FCC installation is a positive step to putting it on a competitive plateau when viewed on a world price basis. Pavlodar, with its operational Heavy Oil Combined Unit, is in the best position in this respect. All facilities can benefit from installation of advance control instrumentation schemes.

Environmentally, if there is desire/mandate to move to current Western environmental standards, all facilities need to pay attention to hydrocarbon gas emissions, reduction of SO_2 emissions and maintenance and operation of their waste water treatment facilities. Atyrau faces possible ground-waste oil burial remediation corrective activities. Elimination of Tetra-Ethyl Lead in gasoline at Atyrau and reduction of benzene in fuels at all locations, is a goal that should be implemented.

With respect to the issue of either modernizing Atyrau or building a new facility at Aktau (the Japanese and Kazakhstan governments announced a new billion dollar grass roots plant at this location in February 1993). The following observations are relative to this issue:

- Western Kazakhstan has existing and developing gas and oil fields.
- The western area of the country has good potential for future industrial/economic growth and, thus, demand for refined product.
- The existing refinery at Atyrau has in place the infrastructure to support expansion.
- The Atyrau Refinery has the land for expansion along with trained staff.
- The Atyrau Refinery area is the focal point for existing major crude oil pipelines and potentially future pipelines.

Foreign funds reportedly have not yet come into Kazakhstan for the Aktau project, although use of local funds have resulted in some site development at the new location. An unbiased, comparative financial analysis of the two possibilities is needed.

The east/west pipeline to bring western Kazakhstan Crude Oil to the eastern refineries and markets should be (and is) strongly considered.

In summary, while modernization and additions are needed, and cost-saving projects exist that should be implemented, the oil industry is generally in a healthy economic/technical state with good, competent, qualified staff and management. Individual refinery operating and engineering management is aware of the need for modernization, improvement and energy reduction. To the extent practical, and with funds available, positive changes are being implemented.

CRUDE THROUGHPUT

The Kazakhstan refining industry has a nominal crude processing capability of roughly 20 million metric tonnes per year. There is some variance with the crude throughput capacities reported by the various departments of the individual refineries. However, a reasonable breakdown of the refinery capabilities is shown in the following two tables, titled "Nominal Refinery Capacity" and "1992 Major Project Slate Comparisons."

KAZAKHSTAN REFINERY PROCESSING UNITS

UNITS	REPORTED CAPACITY, MTA		
	ATYRAU	SHYMKENT	PAVLODAR
Crude Atmospheric - Vacuum Unit	3 000 000	---	---
Crude Atmospheric - Unit	2 000 000	7 500 000	7 500 000
Vacuum Unit	---	4 000 000	4 000 000
Catalytic Reformer	300 000	1 000 000	1 000 000
Coking Unit (Feed Basis)	600 000	600 000	600 000
Calcined Coking Unit (Feed Basis)	140 000	---	120 000
Gas Fractionation	---	470 000	400 000
Diesel Hydrodesulfurizer	---	2 000 000	2 000 000
Kerosene Hydrodesulfurizer	---	600 000	600 000
Sulfur Plant (Product)	---	5 000	20 000
Vacuum Gas Oil Hydrodesulfurizer	---	2 200 000 (1)	2 200 000
Fluid Catalytic Cracker	---	2 000 000 (1)	2 000 000
Gas Concentration	---	1 350 000 (1)	1 350 000
Visbreaker	---	---	1 600 000
Bitumen (Feed Basis)	---	---	1 400 000
Hydrogen Unit	---	Planned for the Future	150 000

NOTE: (1) Under Construction

Western Kazakhstan facilities (Atyrau) refine about 25 percent of the total crude processed in country; and eastern refineries (Pavlodar and Shymkent) the balance of 75 percent. Nationally, adequate crude distillation capability is available for the near future. However, there is a minimum of downstream, intermediate product upgrading capacity.

1992
MAJOR PRODUCT SLATE COMPARISON
KAZAKHSTAN REFINERIES

PRODUCT	REFINERY			
	ATYRAU	PAVLODAR	SHYMKENT	NATIONAL AVERAGE
	%	%	%	%
LPG	0.30	3.0	0.9	1.5
Gasoline	11	30.5	18.3	21
Kerosene	1.4	8.5	8.3	6.6
Diesel and Light Fuel Oil	32.6	29.6	26.1	29
Heavy Fuel Oil (Mazut)	44.9	19.7	42.0	34.5
Coke	1.7	1.0	—	0.8
Bitumen	—	4.5	—	1.6
Others (1)	4.1	3.2	4.4	3.9
Vacuum Gas Oil	4.0	—	—	1.1
	100.0	100.0	100.0	100.0
Total Tonnes	4 433 045	6 160 350	6 048 170	

PRODUCT YIELD STRUCTURE

The product slates, as shown in the previous tables are indicative of the uncomplicated processing schemes found in these facilities. A lack of heavy oil conversion capacity exists. Although there appears to be satisfactory crude distillation capacity for the foreseeable future, there is minimal downstream conversion and upgrading capability.

The Pavlodar and Atyrau refineries were the only facilities in Kazakhstan with operational heavy oil processing capacity (FCC, Visbreaking and Coking Units at Pavlodar and Coking at Atyrau) at the time of the refinery audits. The Shymkent refinery is seriously undertaking the completion of a partially completed FCC unit through conversion to western technology. The Vacuum Distillation Unit at Shymkent, while completed, has only operated for a short time in 1993. The delayed Coking Unit at Shymkent is a few months away from operability and there is no market for the product. Completion and operation of these units, along with development of markets for the products, would dramatically improve Shymkent's product slate and profitability.

As mentioned above, the Shymkent Refinery is moving forward to complete the construction of the partially installed FCC Unit. The following chart shows, on a world price basis, using a very simplistic financial model, the difference in cash flow between Shymkent as it is now and as it could be with an Operating FCC Unit.

At 7.5 million tonnes per year, with Crude Oil at US $100 per metric tonne and taking operating cost at 10 percent of total cost, the total cost at Shymkent would be US $833 million per year.

PRODUCT	CURRENT CASE			CASE WITH FCC[3]	
	QUANTITY MTA	VALUE $/MT[1]	REVENUE MILLION $	QUANTITY MTA	REVENUE MILLION $
LPG, Fuel Gas	232 500	100 [2]	23.25	627 000	62.70
Gasoline	1 402 500	170	238.43	2 794 000	474.98
Kerosene	637 500	175	111.56	450 000	78.75
Diesel, Heating Oil	2 002 500	165	330.42	2 024 000	333.96
Heavy Fuel Oil	3 225 000	70	225.75	1 605 000	112.35
TOTAL	7 500 000		929.41	7 500 000	1 062.74

[1]From Platts oil gram, November 1993, Mediterranean Area.
[2]U.S. Natural Gas Heating Value Equivalent.
[3]The conversion shown is approximate and will vary in actual operating conditions.

The example clearly indicates, relatively, the advantage of bottom of the barrel processing. Current case profit is ($929.41 - 833.00 or $96.4 million dollars) and in this simple FCC case, profit would be ($1062.74 - 833 or $229.74 million dollars). Shymkent is in the process of evaluating the economics, both present and future, that apply to its specific set of circumstances.

Gasoline production, as a percentage of crude oil processed, is significantly lower than found in most market-driven refineries. As noted above, a shortage of heavy oil conversion processes (to lighter, more valuable products such as gasoline) exists within the industry. The Kazakhstan refining industry gasoline yield averaged about 21 percent in 1992. This compares to modern refinery gasoline yields in the range of 45 - 50 percent. Further, the gasoline produced by the refineries is, on average, of rather poor quality. The (R+M)/2 octane ratings for the majority of the gasoline produced were noted to be between 78 and 80. Atyrau with 14% of the country's 1992 gasoline market, produces leaded gasoline while the other two refineries do not utilize Tetra-Ethyl Lead additives.

The crude oil used is of generally low sulfur content. The kerosene desulfurizers were generally not operative in 1993 as the refineries were able to meet local specification without them (0.2 wt% sulfur). For comparison, the specification for U.S. ASTM regular grade burner fuel as well as aviation turbine fuel is 0.3 wt% sulfur.

The Kazakhstan diesel fuel produced in the refineries is primarily a distillate cut from the crude fractionation columns. In Pavlodar and Shymkent refineries the material is desulfurized to produce improved product qualities. In Atyrau, no further treating is done as no desulfurization units exist. On the average, diesel sulfur content is in the range of 0.15 to 0.18 wt%. Total middle distillate products represent about 29 percent of the crude processed in the refineries compared to approximately 20 percent in market-driven systems. Current diesel fuel specifications limit the sulfur concentration to 0.6 or 0.2 percent. The majority of the diesel produced is closer to 0.17 percent sulfur.

Western European and American on-road diesel products are limited to 0.05 percent sulfur at this time. Addition of distillate desulfurization capacity is under consideration at the Atyrau refinery.

Heavy fuel oil constitutes the largest product of the Kazakhstan refineries. It amounted to 34.5 percent of the total crude processed in 1992. This contrasts to less than 15 percent in western, market-driven plants. The high percentage of heavy fuel oil product could reflect either high demand or lack of conversion capacity; high fuel oil imports suggest high demand. The heavy fuel oil is of low sulfur concentration, generally between 0.66 and 1.2 wt%. This material is burned in the majority of the Kazakhstan National Power Plants for electricity generation and with some lower sulfur material exported to the west.

OPPORTUNITIES FOR ENERGY EFFICIENTLY IMPROVEMENT

The US Petroleum industry accomplished a 25 percent reduction energy consumed per metric tonne during the 1973 to 1983 time frame. This was done through energy improvements in the following areas:

- Furnace Efficiency 65%
- Insulation Improvements 25%
- Other Savings 10%

The table on the next page shows the energy consumption for the Kazakhstan crude oil distillation units compared to a U.S. 1983 basis. On average, the US crude distillation units consume 18 percent less energy per tonne of crude oil proposed.

TABLE
COMPARATIVE CRUDE UNIT UTILITY CONSUMPTIONS

	UKRAINIAN UNIT[1]	U.S. CRUDE UNIT[3]	EASTERN EUROPEAN UNIT[4]	KAZAKHSTAN		
				ATYRAU CRUDE UNIT	PAVLODAR CRUDE UNIT	SHYMKENT CRUDE UNIT
Feedstock, Sp. Gravity	0.88	0.825	0.865	0.858	0.836	0.834
Fuel, Kcal/mt Crude	219 113 [2]	153 650	153 000	139 300	182 249	158 170
Steam, Kcal/mt Crude	24 964	14 545	28 140	70 823	24 029	30 352
Cooling Water, m^3/mt Crude	12.2	20.8	0.4	N/A	0.96	N/A
Electricity, kWh/mt Crude	8.84	2.38	5.0	8.99	8.61	6.03
TOTAL, as Kcal/mt	272 613	186 400	193 400	231 699	227 518	202 994

The following table contrasts the potential monetary savings in energy available by improving furnace efficiency, as a function of percent improvement and fuel oil prices. It can be seen that there is significant monetary savings potential by achieving only a moderate improvement in efficiency.

1992 REFINERY FURNACE ANALYSIS

	ATYRAU	PAVLODAR	SHYMKENT	TOTAL
Fuel Oil, mt	110 267	111 651	35 021	256 939
Fuel Gas, mt	48 551	262 425	146 994	457 970
TOTAL, mt	158 818	374 076	182 015	714 909
FUEL COST				
A) World Price $/mt[1]	70.00	70.00	70.00	
B) Refinery Price $/mt	20.00	20.66	14.20	
POTENTIAL YEARLY SAVINGS				
A) World Price and Save 10%	$1 111 726	$2 618 532	$1 274 105	$5 004 363
B) World Price and Save 20%	2 223 452	5 237 064	2 548 210	10 008,726
C) Refinery Price and Save 10%	317 636	772 841	258 461	1 348 938
D) Refinery Price and Save 20%	635 272	1 545 682	516 923	2 697 877

[1] Set at 80% of Crude Oil Cost

Atyrau is the only refinery where it was evident that past practices (burial of waste oils on site) dictate the need for remediation. As the soil is clay-like, it is possible that the problem (leaching) may not be severe. Additional investigation is needed.

In most cases, at all of the refineries Wastewater Treatment facilities would be adequate if the equipment had been properly maintained. In many cases, the equipment can be brought up to operation with a moderate expenditure. In the three refineries that were evaluated in some detail, the recovery of sulfur removed in the Naphtha and Distillate Hydrotreating Units is very small. Approximately 9 percent of crude sulfur was recovered in the Pavlodar and Shymkent refineries in 1992; at Atyrau, there are no sulfur recovery facilities. The major proportion of the crude sulfur remains in the products (primarily diesel and fuel oil). About 74 000 tonnes of sulfur went out in product in 1992 and when burned, found its way to the atmosphere. The lower sulfur content of the crude results in flow rates of high sulfur content refinery streams that are very much below the effective operating capacity of the sulfur recovery units. As a first step in sulfur emission control, a redesign of the sulfur dioxide and sulfur recovery system to operate at lower capacity would seem to be in order here if the country wishes to reduce its contribution to the world's SO_2 emissions.

Environmental issues fall into several categories, within remediation of past problems and changes required to meet likely future regulations. These are:

- Air Quality
- Waste Water Quality
- Solid Wastes

The burial of oily wastes over the past years at Atyrau was the only issue that surfaced during our data gathering visit. Before specific remediation actions can be made, it is first necessary to determine the extent of the problem, an activity which is recommended within this report.

It is not clear at this time as to the extent of future environmental regulations and, therefore, the degree of modification and investment required to adhere to these regulations. It can be said that currently the amount of volatile organic chemical and sulfur dioxide emissions, contaminants in waste water, and quantity of sulfur and aromatics in fuels is in excess of that allowed in the west. A clear policy by regulatory

officials on environmental standards needs to be set forth. This policy/regulation will drive the investment required to achieve environmental improvement in the petroleum refining sector.

At a meeting in late November 1993 the Kazakhstan President's advisor on the environment indicated that the government policymakers are acutely aware of the situation and are promulgating regulations to address the issue.

Neglect of past "non-essential" operations has resulted in current and future environmental difficulties. The environmental control units (e.g. Wastewater Treatment Plants) are in need of repairs and renovation. A clear direction with respect to national environmental discharge standards and policies is needed in order to make process upgrading decisions. Removal of TEL, and reduction of aromatics and sulfur from refined products will not occur until Kazakhstan environmental regulatory authorities enact appropriate legislation with enforceable penalties for non-compliance. Further, national environmental discharge standards and requirements must be redefined and enforced so that environmental emission and discharge improvements can be instituted.

Environmental control opportunities are categorized as follows:

- Development of comprehensive environmental control programs that stress emissions awareness and responsibility. The control programs should emphasize monitoring of specific emissions from the refinery (both air and water), cessation of emissions currently released to the environment, and aggressive cleanup of past pollution.

- Improvement of product desulfurization and refinery sulfur recovery capabilities.

- Improvement in water treatment operations by diligent monitoring of water emissions, repair and maintenance of existing pollution control equipment and remediation of ground contamination resulting past waste disposal practices.

VI. GENERAL OBSERVATIONS AND OPPORTUNITIES FOR ENERGY EFFICIENCY AND ENVIRONMENTAL IMPROVEMENTS

The major operational and energy improvement opportunities fall into the following categories:

- Implementation of comprehensive energy conservation policies and programs justified with world energy prices.

- Improvement of furnace combustion efficiencies by addition of monitoring equipment (e.g. flue gas oxygen analyzers and fuel flow meters), utilization of improved waste heat recovery technology, replacement of equipment where necessary (e.g. burners and instrumentation), and development of operator training courses and incentives in efficient furnace firing techniques.

- Improvement in heat conservation by improving equipment insulation practices.

- Improvement in steam system operating efficiencies by adding steam traps, collecting and reprocessing condensate, and better utilizing the steam system, where warranted, by using steam turbine drivers and/or steam reboilers.

- Utilization of computer simulations in order to understand bottlenecks and deficiencies in fractionation/unit operations so that proper corrective action can be taken.

INDUSTRY INCENTIVES

This industry requires an impetus to improve the operations and upgrading decisions of the individual refineries. Currently, specific processing, upgrading, or major improvement decisions are Centrally Planned, not governed by Market Forces. Institutional Reform (remove disincentive to reduce costs) is needed to drive energy and other cost-saving projects.

At present, there is no economic incentive (that is to reduce costs) to improve the operating efficiencies of the Kazakhstan refineries. This results in poor energy utilization and conservation practices. Furnace or boiler combustion efficiencies are low compared to what could be achieved. Furnaces are operated to achieve required process conditions without regard for energy consumed. Steam, an important utility in any operating refinery, is poorly utilized and managed. Few, if any, steam traps are used in any of the refineries evaluated. A re-evaluation of the steam/condensate system is needed; it is believed a greater percentage of steam can be returned to the system as condensate. Insulation, a low cost energy conservation element, is inadequate or missing in many important areas. Clear incentives to improve the operating energy efficiency of the refining industry are needed.

The disincentive to improve efficiency and reduce energy use through economically-driven cost-saving activities must be removed or abated in order for the local operating staff to seek out and implement cost-reduction projects.

Institutional changes are needed in business practices to procure the economic driving force to minimize cost and maximize profits (in the western sense of the word). Funding mechanisms must be developed to help the industry realize and implement projects that are needed to place it in a competitive position with market-driven refineries.

I. INTRODUCTION

A. THE NIS PETROLEUM REFINERY PROGRAM - KAZAKHSTAN

This report and the work entailed to produce it were performed as part of the USAID NIS Petroleum Refinery Program for Kazakhstan. It details the results of an economic analysis of the Kazakhstan petroleum refinery sector and an overview, or characterization and summary evaluation, of the country's three refineries which are located in Atyrau, Shymkent, and Pavlodar. The overall goal of the work is to assist in the privatization of the petroleum sector by providing salient information for preliminary investment decisions, and to enhance privatization opportunities by recommending improvements for the existing installations that will increase technical and financial performance. Further, it is intended to catalyze and focus the lending efforts of international financial institutes, such as the World Bank and EBRD.

John Brown would like to acknowledge the excellent cooperation and assistance provided by the following people in Almaty.

Victor I. Begin	Vice President Kazakhstanmunaygaz National Oil Company
Jury N. Lavreshin	Deputy Chief Department of Oil Gas Refining and Oil Chemistry Kazakhstanmunaygaz

B. OBJECTIVES AND SCOPE

Specific USAID objectives of this study are:

- To identify changes in operating practices and low-cost modifications to equipment that can be immediately implemented to increase the efficiency of energy utilization, to conserve energy by avoiding unjustified energy use, and to reduce, as far as practical, undesirable gaseous, liquid, and solid effluents.

- To identify, characterize, and recommend more extensive changes in operating and maintenance practices, equipment, and physical modifications to the process units. These should be justifiable, but at the same time may require further study, possibly with inputs that may not yet be available.

- To develop focus on areas that require further investigation or study before specific recommendations or opportunities for improvement can be made.

- To compile available data relevant to crude oil supplies in terms of historical patterns and future options.

- To characterize the operations of the petroleum refining industry in terms of processing capability, adaptability to changing crude slates, adaptability to changing product slates, efficiency of energy consumption, and environmental impact.

- For the country's three refineries, to audit the energy consumption, environmental emissions, mechanical condition, processing effectiveness, controllability, and reliability and to evaluate the results to identify opportunities for improvement.

- To compile available data relevant to national markets for petroleum products in terms of historical patterns and future demand, including compilation of data and information with respect to the pricing of petroleum products at the ultimate consumer level and with respect to actions to privatize the industry.

- To review economic and financial results, based on privatization policies, to recommend the viability of individual components of kazakhstan's petroleum sector.

C. METHODOLOGY AND ACTIVITIES

A single team was established by John Brown to visit and collect data relating to oil refinery operations, supply and markets from the existing three refineries, and other sources (local government offices and ministry officials within the country). The visits took place during November, 1993. The "Characterization and Evaluation Team" consisted of Robert Jurish, the overall Project/Process Manager; Bronek Dutklewicz, the Economist, from I.S.T.I. (International Science and Technology Institute, Inc.), Thomas Dempsey, the Instrumentation/Electrical Engineer and Charles Best, the Environmental Engineer.

In addition to the above, Ivan Lisin, Natalya Molchanova, Tania Proshina, Dr. Alexander Danielenko, and Raushan Aldabiyeva provided local technical consultation and interpretation services. The objective of this team was to characterize and perform a summary analysis of the current operating status and economic performance of the petroleum refining industry in Kazakhstan.

The field activities consisted of a review of general refinery operating parameters followed by process reviews of selected units with members of the refinery engineering, operations, and management staff. Additionally, the units were visually inspected. Kazakhstan refinery counterparts were made available to each of the team members as needed. In addition to a "process unit" or systems approach to analysis, the team viewed the refinery from an overall mechanical, electrical, instrumentation and environmental perspective. Opportunities for energy efficiency and operational improvements, and reduction of emissions for the three refineries were developed.

BASIS FOR REFINERY SELECTION

The review of the Atyrau, Shymkent, and Pavlodar facilities considered in this study was set by agreement between U.S. AID, Kazakhstanmunaygaz, and John Brown in October, 1993 based on a national Kazakhstan crude processing capacity of 19.5 million mta, the Pavlodar and Shymkent enterprises process nearly 40 percent each and Atyrau over 20 percent of the total material refined.

II. PETROLEUM REFINING INDUSTRY OVERVIEW

A. THE REFINERY INSTALLATIONS

Table II A-1 lists the reported nominal capacity of each of the refining units in the country. Based on a national Kazakhstan crude processing capacity of 20 million mta, the Pavlodar and Shymkent enterprises have the capability to process nearly 40 percent each and Atyrau over 20 percent of the total crude oil refined.

Table II A-2, provides a comparison, by refinery, of the 1992 major product slate, along with the national average of those products.

Table II A-3, shows a Summary Comparison of Kazakhstan crude unit energy utilization with selected other worldwide facilities. Refer to Appendix E for additional worldwide refinery unit energy use comparisons.

TABLE II A-1
KAZAKHSTAN REFINERY
PROCESSING UNITS

UNITS	REPORTED CAPACITY, MTA		
	ATYRAU	SHYMKENT	PAVLODAR
Crude Atmospheric - Vacuum Unit	3 000 000	---	---
Crude Atmospheric - Unit	2 000 000	7 500 000	7 500 000
Vacuum Unit	---	4 000 000	4 000 000
Catalytic Reformer	300 000	1 000 000	1 000 000
Coking Unit (Feed Basis)	600 000	600 000	600 000
Calcined Coking Unit (Feed Basis)	140 000	---	120 000
Gas Fractionation	---	470 000	400 000
Diesel Hydrodesulfurizer	---	2 000 000	2 000 000
Kerosene Hydrodesulfurizer	---	600 000	600 000

TABLE II A-1 (continued)
KAZAKHSTAN REFINERY
PROCESSING UNITS

Sulfur Plant (Product)	---	5 000	20 000
Vacuum Gas Oil Hydrodesulfurizer	---	2 200 000 [1]	2 200 000
FCC	---	2 000 000 [1]	2 000 000
Gas Concentration	---	1 350 000 [1]	1 350 000
Visbreaker	---	---	1 600 000
Bitumen (Feed Basis)	---	---	1 400 000
Hydrogen Unit	---	Planned for the Future	150 000

NOTE: [1] Under Construction

III. ECONOMIC ANALYSIS OF THE KAZAKHSTAN PETROLEUM SECTOR

A. INTRODUCTION

1. Scope of Work

The generic goal of this study is to enhance the process of change that will ultimately lead to the rationalization of the petroleum sector in Kazakhstan.

Kazakhstan has three existing refineries located at Atyrau, Shymkent and Pavlodar. The Kazakhstan Government and the State Oil Company - Kazakhmunaygaz (KMG) have plans to modernize these refineries; improve operational efficiency, energy conservation and pollution control measures. Plans are also under consideration for the privatization of the petroleum sector in accordance with the National Mass Privatization Plan.

These changes are being undertaken at a time when a) the market demand for petroleum products is likely to change both in quantity and quality; b) the characteristics of the crude supplies could change with the development of domestic crude oil reserves; c) increasing awareness of environmental quality will put pressure on product quality and refinery operations; and d) shortages of foreign exchange and the desire for new investments could accelerate the need to attract private investment capital.

With this in mind, the Scope of Work entailed two distinct tasks. Firstly, a detailed technical characterization of the individual refineries was performed as described in the introduction to this report. The second task, was to review the economic and financial aspects of the refineries individually, and to review the overall economics of the petroleum sector. The overall goal of the second task was to assist in the privatization of the petroleum sector by providing salient information for preliminary investment decisions and follow up, and to enhance privatization opportunities by recommending improvements for the existing installations in the sector that will increase technical and financial performance.

The scope of work for the economic evaluation included the following:

- A review of the policies, methods, and history of product pricing, including the relationship between oil product prices, the organization receiving the revenues and the impact on the refining industry's financial position.

- Analysis of the existing taxation system applied to the petroleum sector and recommend preferential changes.

- Review of financial practices including an analysis of major cost components in the operation of each refinery, including salaries and fringe benefits, taxes, subsidies, ex-refinery pricing, crude oil procurement and payment.

- Overview of critical elements which have lead to successful privatization of the petroleum sector in other countries and their potential use in Kazakhstan.

- Identification of options that could be considered for the privatization of the industry.

2. METHODOLOGY

The specific intent of the work in this area, set under the original terms of reference, was to avoid efforts to compile data of a statistical nature in order to permit analysis and evaluation, but rather to base such analysis on data already available. USAID made available to the team data that had been prepared on Energy Pricing and Taxation in Kazakhstan in June 1993.

Further information was obtained through participation in a fact finding Mission in Kazakhstan in October/November 1993. During this Mission interviews were held with the senior management of two of the three refineries in Shymkent and Pavlodar, with data only Supplied by Atyrau, and with members of various State Ministries and Agencies in Almaty. These included the Ministry of Energy and Natural Resources; the Ministry of Economics; The Committee of State Property; and the Cabinet of Ministers. Discussions were also held with the State Companies responsible for the operation of the petroleum sector in Kazakhstan i.e. Kazakhmunaygaz and Kazakhnefteproduct, (KNP).

Extensive and effective meetings were held at both Pavlodar and Shymkent Refineries. The fact finding efforts in Almaty however, were severely hampered by the dislocations that were taking place associated with the conversion of the country from the Ruble to a National Currency - the Tenge.

Discussion with the refineries were primarily with the economic and planning divisions and centered on the past and current economic performance of the refineries. The main objective was to obtain a thorough understanding of the methodology of establishing prices of petroleum products at the ex-refinery level; and the cost structure of the refining sector. While the focus was primarily the economics of the refining operation, discussion was held with local representatives of the marketing and distribution company KNP in an attempt to obtain a better understanding of the interface between refining and their petroleum product markets.

The review of historical refinery economic operating data was originally intended to cover a five year period on an annualized basis. Preliminary analysis however indicated that annualized data was at this stage largely meaningless, due to the very rapid price escalations; high inflation rate and widely fluctuating exchange rates. To obtain a more accurate assessment of how the refineries were coping with the then volatile economic environment more frequent data was needed. Both refineries were most helpful in preparing and reviewing their monthly operating experiences and the problems that were being encountered. This exercise highlighted the danger of using current economic data to draw comparisons on any longer term trends or inter refinery/regional comparisons.

Throughout this study care has been taken to differentiate between the changes that are currently taking place in what is an unstable transitionary period in Kazakhstan and the longer term expectations and aspirations for the petroleum sector.

During the last three years the ruble exchange rate increased from 1.75 rubles/$ in 1991 to 5000 rubles/US$ in late 1993. This volatile exchange rate when coupled with rapidly changing domestic prices makes the comparisons of the petroleum sector economics on a foreign hard currency extremely difficult, and has been avoided as far as possible in this report. Where necessary, comparisons between Kazakhstan and World prices have been made using instantaneous prices and conversion rates in effect during the Mission visit in November of 1993. These are gross estimates that should be treated with caution.

The basic statistical data available on petroleum product production; consumption and imports and exports show various inconsistencies. It became evident early on in this study that this was due to the volatility of the current markets, and to differences in reporting and standardization of statistical data. This is especially true of import and export current and past export figures, which are generally recognized to be under-reported. No extended effort was made to reconcile these differences in this analysis, however these differences were factored into the observations and conclusions reached.

Similarly, there was a large spread in magnitude and opinions as to the future expectations for petroleum consumption. The differences were factored into the analysis qualitatively where they would impact the conclusions.

The structure, logistics and economics of the petroleum sector in Kazakhstan is, and will be, influenced by the geography of the country and regional dictates on the petroleum markets. Neither current regional petroleum market data, nor future expectations were made available for this study. The observations and conclusions presented are thus based on a national perspective, and it should be recognized that the regional requirements do need to be factored into any final analysis.

B. PETROLEUM SECTOR OVERVIEW

1. CRUDE OIL AND REFINED PRODUCT SUPPLY

a. Crude Oil Supply

Kazakhstan is a country rich in energy and especially petroleum resources. In 1992 the country produced 26 million tonnes of crude oil, including 3.8 million tonnes of condensate. An active exploration and development program currently underway is expected to result in oil production to rise to over 50 million tonnes per year by the year 2000. Geographically, the major production comes from on-shore reserves in the northwest Caspian Sea area of the country. A small but declining production of crude oil from the Central Kumkol Region is also produced. In the Caspian region, six major production regions produced over 90 percent of the country's oil. The Manguyshlak area is the major producer accounting for half (11 million tonnes) of the total, followed in size by the Tengiz area (4.4 million tonnes). Current expectations are that the Manguyshlak production will in essence stay at current production levels through the rest of this decade, while major new production expansion is expected from the Tengiz area, where production of 29 million tonnes per year could be expected by the year 2000.

In addition to the development of current proven reserves, major new exploration initiatives are being undertaken offshore in the Caspian Sea in conjunction with an international consortium of oil companies.

Crude Oil Disposition

The location of the oil production regions in the west; the major refineries and product markets in the east; and a pipeline system that runs north in Russian leads to logistic difficulties and a distorted disposition of Kazakhstan crude oil. In 1992, 4.6 million tonnes of domestic oil was refined primarily at the Atyrau refinery with a limited amount at the Shymkent refinery. Under an 1992 Inter-Republic Trade Agreement with Russia a further 13 million tonnes was exported to Russia in the west in exchange for Siberian oil imports into the Pavlodar and Shymkent refineries in the east. The balance of 6 million tonnes was exported outside the Former Soviet Union (FSU). The Kazakhstan/Siberian Oil exchange was originally envisaged as a parity exchange with adjustments being made for quality differences between the crudes. This has run into some difficulties in practice, and have resulted in short term shortages in crude oil availability for Pavlodar and Shymkent. Current expectations are that oil imports from Russia will decline to 10 million tonnes in 1994.

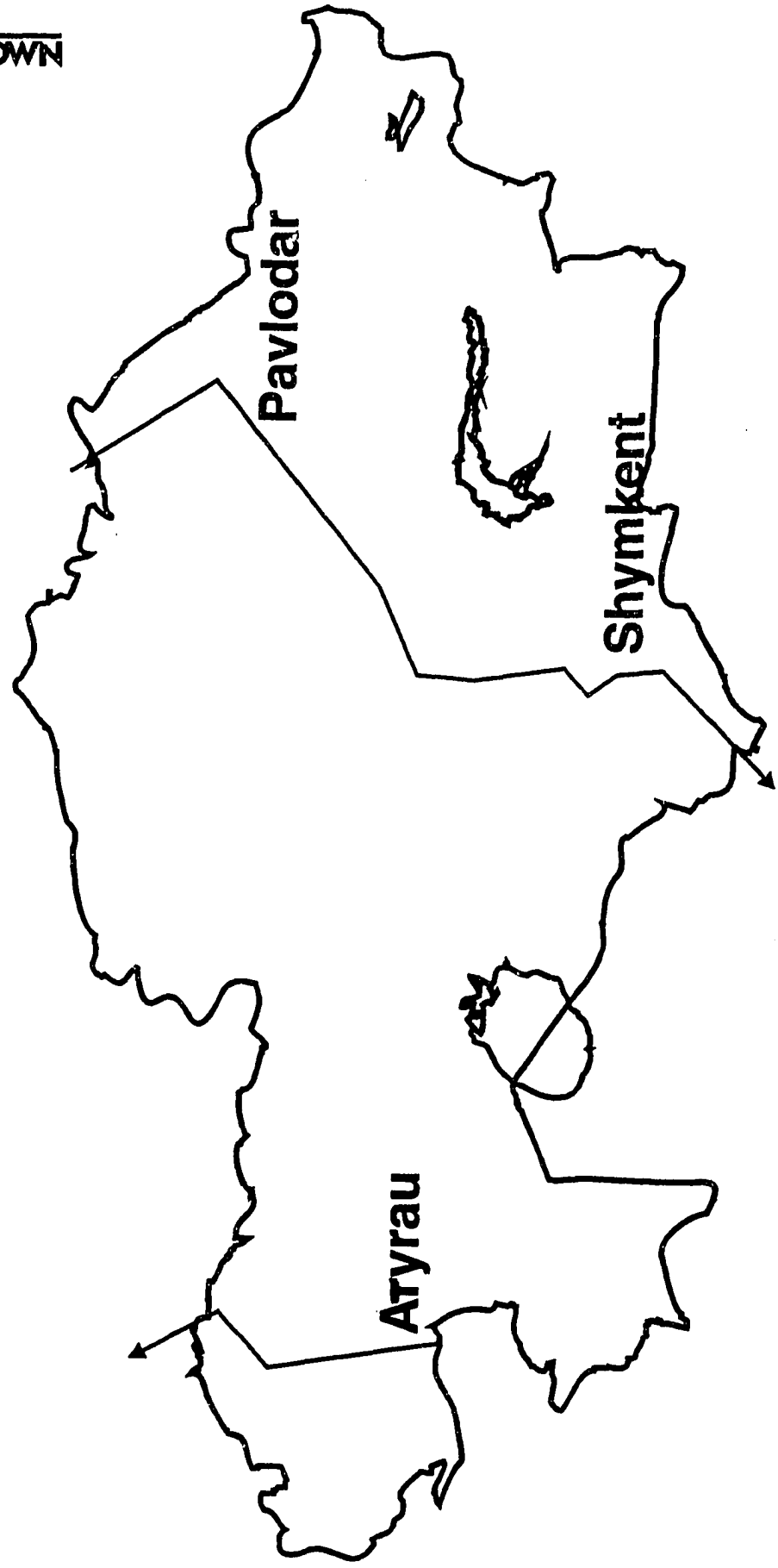

Kazakhstan Petroleum Sector
Figure 111-B-1

3. Domestic Refined Product Markets

Domestic Consumption of petroleum products has declined from 18.3 million tonnes per year in 1991 to 15.5 million tonnes in 1992, and is not expected to drop significantly below this figure in 1993. General expectations are that consumption has now bottomed out and could remain at this level for the rest of the decade. The decline in demand has been spread evenly over all products and most sectors of the economy.

Sectorial consumption of petroleum products is skewed largely towards agriculture which accounted for 38 percent of total consumption in 1992. Automobile usage accounts for 8 percent and rail transportation accounts for a similar amount of 7 percent. The Ministry of Energy purchases, mazut primarily, for power generation, accounts for 15 percent of total consumption. Other consumptions amounting for 32 percent of consumption, represent to a large extent mazut for industrial purposes.

TABLE III-B-1
SECTORIAL DISTRIBUTION OF PETROLEUM PRODUCT CONSUMPTION

SECTOR	CONSUMPTION THOUSAND TONNE/YR	PERCENT
Agriculture	5 572	38
Ministry of Automobiles	1 182	8
Rail Trainsport	1 071	7
Health Care	44	0
Ministry of Energy	2 174	15
Other	4 820	32
TOTAL	14 863	100

Source Kazakhnefteproduct, Oct. 1992, IRG

Mazut use for power generation, district heating and industrial uses is a major factor accounting for over one third of total petroleum consumption in Kazakhstan. The need for mazut usage is not altogether clear. The refiners complain of excess mazut production calling for deeper bottoms upgrading. Both KNP and the major consumer Kazenergo point to increased demand for mazut and point to current importation of mazut. In the power sector, mazut

b. Product Supply

The total consumption of products prior to independence in 1991 amounted to some 18.7 million tonnes per year. In 1992 demand declined by approximately 15 percent to a level of 15.8 million tonnes. In 1993 while the gross domestic product (GDP) declined by 15 percent, the demand for energy had not decreased appreciably. It is generally considered that consumption has now bottomed out, as the current level of consumption is representative of basic necessities (especially agricultural needs which is a major consuming area). Prior to 1991, the domestic refining capacity was inadequate to supply domestic demand, necessitating the import of products, primarily from the north. In 1991, net imports of petroleum products amounted to 5.5 million tonnes per year, which declined to 3.4 million tonnes per year in 1992.

c. Future Outlook

Prior to the current economic downturn Kazakhstan had very ambitious plans for refinery expansion through the construction of new refineries and expansion of the existing three refineries. Refinery capacity was slated to increase from 17.6 million tonnes in 1992 to 26.5 million tonnes in 1995 and exceed 40 million tonnes by the year 2000. At the same time domestic consumption was expected to increase to 27 million tonnes per year. This major expansion in refining capacity would have turned Kazakhstan into a major exporter of refined products by the end of the decade.

The current situation, however, will necessitate a reappraisal of future plans. The present thinking of the Ministry of Energy is that domestic petroleum consumption will remain flat for the foreseeable future and that consumption in 2000 will not be substantially different from today, either in total quantity or product spectrum. At the same time the development of severe refining over capacity to the north in Russia, will raise doubts on the viability of building export oriented refineries in Kazakhstan, (at least in the north). Under this scenario Kazakhstan would be essentially in domestic refining self-sufficiency depending on the quantity of product exported.

2. Geo-Economic Considerations

Geographically, the Kazakhstan petroleum sector can be considered to be made up of three distinct regions (Figure III-B-1) with distinctly different characteristics, located one thousand to fifteen hundred miles apart.

- The northwest area round the Caspian Sea is crude oil and gas rich, sparsely populated with a limited market, and located closer to the major markets in Russia than to eastern Kazakhstan. The logistics; both rail and pipeline traverse this region from north to south. The region has access to international markets through the Russian pipeline system, but anticipated future crude oil export expansion justifies the construction of a dedicated pipeline to international markets; a major project currently under negotiation. The Atryau refinery with a capacity of 4.6 million tonnes per year was originally constructed in 1945, is a hydroskimming operation that will require substantial investment to bring it up to modern standards. A major grassroots refinery in the Manguyshlak area is reportedly under negotiation with a Japanese consortium.

- The northeastern area centered on Pavlodar, Semipalatinsk and Karaganda; while energy rich in the form of coal deposits, is devoid of oil and natural gas; it is the major industrial area and the major petroleum market; and is connected logistically by rail and pipeline to Siberia in the north. The Pavlodar refinery with a current capacity of 7.5 million tonnes per day is a relatively modern refinery commissioned in 1984, and has a catalytic cracker and other bottoms upgrading capabilities (coker and visbreaker). The area is a net importer of petroleum products primarily from the Omsk region of Russia to the north. A 6 million tonne per year capacity expansion at the Pavlodar refinery is partially completed but is currently on hold.

- The southern region encompassing the Shymkent, Sarya Dar, Djambu area, has no oil resources, receiving Siberian crude oil via pipeline; has a limited local predominately agricultural market; and is linked by rail to the north with Almaty and the Pavlodar region. It is linked to southern markets in Uzbekistan, Kyrgyztan and Turkmenistan by rail and limited petroleum product pipeline connecting to Tashkent. The Shymkent refinery is a relatively modern hydroskimming refinery built in 1978 with a current nominal capacity of 7.5 million tonnes per year. A partially completed FCC unit is currently on hold pending re-evaluation of the economics.

The evolution of these three regions has resulted in petroleum refining and marketing sectors that have more in common with their now foreign neighboring areas than with the other areas within Kazakhstan. From a refining perspective the Atryau and Pavlodar refineries are overshadowed by the refinery centers of central Russia and western Siberia to the north. Shymkent on the contrary, is the dominant source of petroleum product supply for the southern neighbors.

65

is used to cofire with coal which is of low quality having very high ash content. As new coal facilities come on stream, and with an increased co-firing needs for older power stations with declining efficiencies, more rather than less mazut will be needed in future. There are, however, programs under study to improve the quality of the coal at the source.

Geographical Distribution

This data was requested, but not made available.

Export Markets

The amount of petroleum product consumption actually consumed within the Kazakhstan borders, and how much is exported either to satisfy neighboring markets and/or exported into the international market to generate hard currency, is not altogether clear based on available data. The refineries are allocated an export allowance of 5 to 10 percent of their production to generate currency for their current operating financial needs. Furthermore, the Government of Kazakhstan estimates that exports of all commodities, presumably also including petroleum products, are currently under reported by at least 40 percent. The actual amount that is exported has considerable bearing on the short term need for additional refining capacity and/or upgrading capacity.

4. Institutional Factors

Industry Structure

The downstream segments of the petroleum sector - refining and marketing - are in the hands of two state companies with distinct responsibilities: Kazakhmunaygaz is responsible for refining, while Kazakhnefteproduct has the responsibility for marketing and distribution of both domestically refined products and imported finished products. Up to the present the dividing line has been very rigorously drawn at the bulk loading facilities at each refinery. While there appears to be some linkage and cooperation between these two entities, the dividing line of responsibility apears to be much wider than usually encountered in the west.

The petroleum sector was in the initial throes of restructuring and privatization. The question of whether, and to what extent, the refining and marketing activity needs to be integrated is receiving some attention.

Kazahkmunaygaz

Kazakhmunaygaz (KMG) has direct responsibility for the operation of the refining sector in Kazakhstan. In September 1993, KMG was reorganized into a State Holding Company, with the following subsidiary companies:

- Six Oil Fields/Production companies,
- The Atyrau and Shymkent refineries,
- A Geophysical/ Exploration Company,
- Two pipeline companies with facilities in western Kazakhstan and into Russia,
- Several Service and Infrastructure Companies.

The Supervisory Board of KMG set up by the Cabinet of Ministers will have the following representation:

	Percentage
Ministry of Energy and Fuels	35
Committee of State Property	35
Kazakhmunaygaz	10
Ministry of Finance	10
Service Bank	10
	100

Currently the management structure of KMG is being reorganized and the necessary data is being put together for presentation to the Committee of State Property and the Cabinet of Ministers. As presently envisaged KMG will consist of about 10 to 12 main companies with about twenty subsidiary companies. The holding company will have a minimum state ownership of 51 percent; 10 percent will be owned by the employees; and the balance will be determined by coupon stock exchange by the Investment Funds. Direct individual investment if foreseen later.

Future plans call for KMG to integrate downstream into marketing and distribution through participation in KNP and direct expansion into retail sales. It is anticipated that KNP will primarily still be responsible for domestic sales while KMG will diversify into an international oil company.

Kazakhnefteproduct

Kazakhnefteproduct has virtually the sole responsibility for the marketing and distribution of petroleum products in the country. It purchases all the refined products directly from the refineries in bulk and has the responsibility for loading, transportation and distribution of domestically refined products. It is also responsible for the importation of products as needed to supplement domestic production.

KNP operates bulk distribution terminals in each of the nineteen Oblasts, and has three subsidiaries operating at each of the three refineries. Approximately 80 percent of products are supplied through these terminals with about 20 percent going directly to the end consumers.

Central State Control Structure

In addition to the two operational state companies KNP and KMG, the responsibility for the day to day management of the petroleum sector is shared by the Ministry of Energy and Natural Resources, the Ministry of Economics and the supervision of the Cabinet of Ministers.

The Ministry of Energy and Natural Resources is responsible for the balance of supply and demand throughout the country using both domestic and foreign imported products. The Division of Balances, which is a Division of the Ministry of Energy, supervises the supply and distribution of petroleum products and dictates the imports of foreign products according to need. The operational execution of this is done by KNP.

The Committee of Pricing in the Ministry of Economics is responsible for determining unified national costs to be applied at the wholesale and retail levels. The Committee bases pricing decisions on total cost of supply considerations taking into account the cost of crude oil production in Kazakhstan, refining costs and the cost of importing products from abroad.

C. REFINERY FINANCIAL OPERATIONS

During the period of this study the Kazakshtan economy in general and the refining sector in particular, were going through some very difficult changes. On the economic level, the country experienced a period of rapid inflation; unstable foreign exchange rate; shortages of foreign exchange and a currency conversion from the old Ruble to a new National currency - the Tenge. The petroleum sector at the same time has experienced very large increases in raw material (crude oil) costs; major disruptions in supply patterns and shortages of crude oil and product supplies. Under these conditions any comparisons; whether they be between refineries, regions or with similar international operations is extremely difficult if not impossible.

For this study, the analysis of current refinery operations and economics was directed at identifying major trends and practices that significantly impact the future development of the industry, rather than any quantitative analysis of current operations.

1. Crude Oil Prices

Over the last two years refinery crude acquisition prices have increased very dramatically. This has been true for both domestically produced oil and crude imported from the Former Soviet Union (FSU). The monthly crude oil acquisition costs reported by the three refineries for the last two years is shown in Figure III-C-1. During this period Pavlodar and Shymkent were running primarily on imported crudes with minor inputs of domestic Kumkol Crude, while the Atyrau refinery processed domestic crude oils exclusively.

Figure III-C-1

Refinery Crude Oil Aquisition Prices

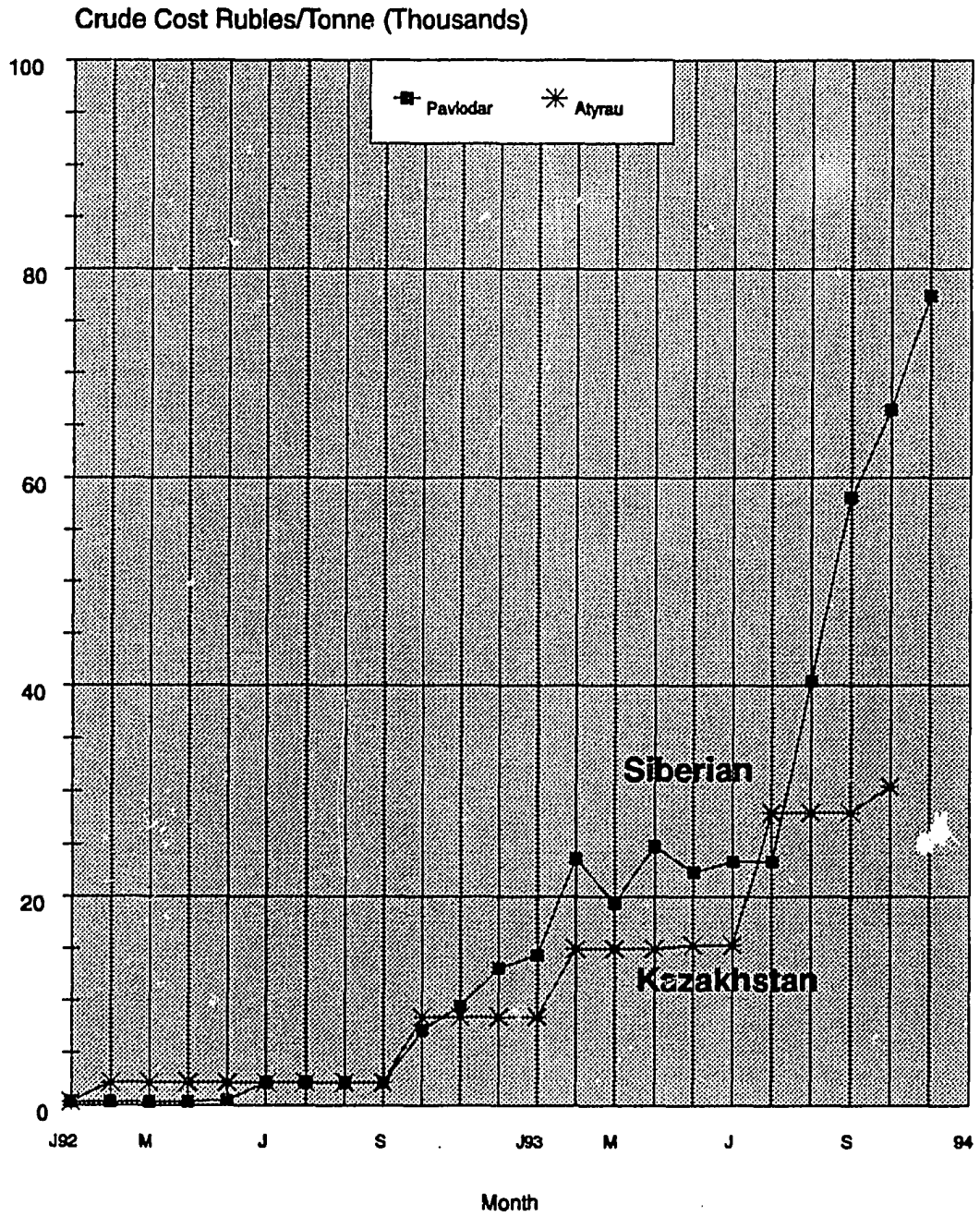

During this period, the quantities of crude oil exported by Kazakhstan to Russia in the west were approximately equal to the quantity of FSU oil imported into the east to supply the Pavlodar and Shymkent Refineries, and the pricing of domestic and imported crudes were linked in what was originally an exchange agreement between Kazakhstan and Russia.

Under the terms of the Inter-Republic Trade Agreement with Russian in 1992, the prices of crude oil traded between Kazakhstan and Russia were in principle set at parity with appropriate quality corrections. The higher sulfur metals and wax content of the Kazakhstan crudes relative to the FSU crudes resulted in a quality discount for Kazakhstan crudes being reportedly demanded by the Russians of the order of 1500 to 3000 rubles/tonne. This differential was not immediately translated into a comparable spread in crude prices for the Kazakhstan refineries which treated domestic and Siberian crudes. For most of 1992, both domestic and imported prices were virtually identical.

In October of 1992, Russia decentralized negotiations on inter-republic oil agreements, resulting in a rapid escalation of both domestic and imported crude oil prices and a widening of the spread between crude oil prices. The spread between domestic and imported crudes has opened to substantially more than the quality differential mentioned above. During the latter part of 1992 and the whole of 1993, the spread has averaged close at 10 000 rubles/tonne. It would appear that this spread can be attributed to the pricing lag between domestic and imported crudes pricing mechanisms.

Directionally it would be expected that Atyrau should have lower crude acquisition costs than Pavlodar or Shymkent based on domestic crude oil quality and location factors. The current stability of prices is too volatile to draw any meaningful conclusions from existing figures.

The important factor impacting crude oil prices in the near term will be the rate at which Russian and Domestic Kazakhstan crude oils will escalate relative to world oil prices. As shown in Table III-C-1 the Kazakhstan crude oil acquisition prices for all three refineries are still considerably below even the current depressed crude oil price levels. The average 1993 crude prices were approximately one quarter of world prices, though by the end of the year imported crude prices had risen to about 50 to 60 percent of world prices, depending on exchange rate used.

TABLE III-C-1
REFINERY CRUDE OIL ACQUISITION COSTS

REFINERY	YEAR	1990	1991	1992	1993[1]
Pavlodar	Rs/Tonne[2]	32.00	75.00	3 407	29 299
Shymkent	Rs/Tonne	32.50	74.50	4 412	29 850
Atyrau	Rs/Tonne	31.50	70.00	3 596	19 853
Average	Rs/Tonne	32.00	73.17	3 805	26 334
	$/Mt	18.29	41.81	38.05	23.74
	$/Bbl	2.46	5.63	5.12	3.19
Exchange Rate	Rs/US$	1.75	1.75	100	1 109

[1] Based on Average of 10 month period
[2] Rubles per metric tonne

Future Outlook for Crude Oil Prices

Considering the longer term outlook (2 years and beyond time frame) for crude oil prices for the refining sector in Kazakhstan a number of factors should be considered:

- Because of the existing transportation infrastructure the price of crude will continue to be dependant to a very large degree on the pricing policy of crude oil to the north in Russia. As long as the Russian producers make crude oil available to their refineries at below world prices, then Kazakhstan may need to follow the Russian price leads.

- Price differentials between Kazakhstan and Russian crudes will continue to depend on the quality differentials. The valuation may be determined more by international oil price spreads rather than the existing pricing structure.

- Over valuation of the bottom-of-the-barrel today is caused by the use of high mazut/crude oil proportional factors used in the current product pricing methodology. This tends to favor heavy crude oil prices. In the future, when crude oil and product prices approach world prices, the price spread between light and heavy crude oils can be expected to increase.

62

2. Operating Costs

The refinery operating cost are calculated by the accounting department of each refinery using a standard format developed by Moscow in the early 1970s. These cost figures are used for planning purposes and for determination of petroleum product prices. Direct operating costs are computed for each individual processing unit and combined for the total refinery.

A typical breakdown of refinery operating cost computation for the Shymkent Refinery is shown in Table III-C-2 which shows the planning cost figures for November 1993.

TABLE III-C-2
SHYMKENT REFINERY OPERATING COSTS
NOVEMBER 1993

ITEM	UNITS[1]	QUANTITY	PRICE	COST THOUSAND RUBLES/MONTH	RUBLES/ TON	PERCENT
FEEDSTOCK						
Crude Oil	Thousand MT	580.00	53436.74	30 993 309		
Losses	Thousand MT	4.09	53436.74	218 556		
Sub-Total	Thousand MT	575.91		30 774 753	53 436.74	76.2%
OTHER RAW MATERIALS						
Catalyst and Chemicals				111 669		
Other Materials				2 000		
Sub-Total				113 669	2 193.90	0.3%
ENERGY COSTS						
Electric Energy	RS/KWH	12 999	24.6	319 781		
Base Charge		23 300		69 900		
Thermal Power						
Steam 40 bar	RS/Gcal	21 300	23 345	497 249		
Steam 16 bar	RS/Gcal	14 434	21 020	303 403		
Hot Water	RS/Gcal	2 052	19 460	39 932		
Sub-Total					2 136.21	2.1%
UTILITIES						
Demineralized Water	RS/T	28 000	2 443.46	68 417		
Condensate	RS/T	37 799	2 443.46	92 360		
Fresh Water	RS/M^3	316.5	206.75	65 436		
Industrial Water	RS/M^3	26.6	32.00	851		
Sub-Total					394.27	0.6%
OTHER						
Wages				43 575		
Social Insurance				16 123		

64

TABLE III-C-2
SHYMKENT REFINERY OPERATING COSTS
NOVEMBER 1993

ITEM	UNITS[1]	QUANTITY	PRICE	COST THOUSAND RUBLES/MONTH	RUBLES/ TON	PERCENT
Employment Fund				1 014		
Maintenance				287 933		
Safety and Protection				7 400		
Uniforms, etc.				206		
Highway Tax				370 566		
Depreciation				27 031		
Other Expenses				9 116		
Investment Fund				1 655 436		
Production Cost				34 764 150	60 363.86	86.0%
	PERCENT					
Allowable Profit	16			5 649 174	9 809.13	14.0%
Tax on Profit	25			1 412 294		
Investment	35			1 977 211		
Social Benefits	25			1 412 294		
Bonus/Wages	15			847 376		
	100					
TOTAL PRODUCTiON COST (ex Taxes)				40 413 325	70 172.99	100.0%

[1] RS= rubles

The operating costs shown in Table III-C-2 include : raw material; purchased energy and utilities; wages and associated cost; maintenance; and other miscellaneous costs generally associated with refining operations in the west. Certain differences from western practices in calculating operating cost should be noted.

- Profit Margin. The total production cost is taken as the sum of raw materials, primarily crude oil, energy and utility costs, wages and other expenses. The refiner is then allowed a fixed percentage mark-up or "profit" on top of these expenses to arrive at total production costs. The allowable profit margin for refining was 20 percent until recently when it was reduced to 16 percent for Shymkent. This "profit" is subject to a profit tax amounting to 25 percent on the profit. The rest of the profit is used for refinery capital investments (35-45 percent), and the balance distributed as bonuses, wages and other social benefits.

- Capital Related. The refining operation is subject to an investment fund contribution of 5 percent to the state. In the past major capital expansions were funded out of this Government investment fund, by applying to the state for funds for major projects. No capital expense or interest charge are charged against these investments and do not appear as a capital related expense in current operating costs.

- Depreciation charges are computed for individual equipment and appear to be lower than for similar operations in the west. The Shymkent refinery was fully depreciated in 1992, which could explain the very low depreciation charges.

- A special fund payment for paying off the non-operating processing units is included in both Pavlodar and Shymkent's operating costs. Both refineries have major construction expansions under construction but currently in limbo. These are the second distillation train at Pavlodar and the FCC unit at Shymkent.

- Wages. Labor costs appear both in the direct operating costs and as distributed profits as mentioned above. Base wages; a tax on wages for social benefits (37 percent) and a 2 percent unemployment tax all appear as a direct operating cost. Bonuses, extra wages and benefits (vouchers for labor unions, vacation allowances etc.) are paid out of "profits", and can account for a major part of labor related costs. At Shymkent the average base salary was reported to be of the order of 20 000 rubles per month, while total renumeration was of the order of 100 000 rubles per month.

A summary of recent refinery operating costs for the Pavlodar, Shymkent and Atyrau refinery are shown in Table III-C-3. In this summary the capital, labor

66

and tax component of the allowable profit has been combined with the similar line item component in the cost computation. Detailed operating cost computations for each of the three refineries is shown in Tables 1 through 4 in Appendix III.

TABLE III-C-3
COMPARISON OF REFINERY COSTS

	ATYRAU	SHYMKENT	PAVLODAR		
	RS/Tonne	RS/Tonne	RS/Tonne	$/Tonne	$/BBL
Raw Materials	30 509	53 256	77 459	25.82	3.46
Energy Related	1 779	2 121	5 856	1.95	0.26
Utilities	327	391	290	0.10	0.01
Maintenance	901	496	2 451	0.82	0.11
Labor Related	3 397	4 001	7 876	2.63	0.35
Capital Related	2 580	6 310	7 839	2.61	0.35
Taxes	1 843	3 074	4 658	1.55	0.21
Other	2 892	29	5 363	1.79	0.24
TOTAL	44 228	69 679	111 791	37.26	5.00
Gross Margin	13 718	16 423	34 333	11.44	1.53

RS = Rubles: A value of 3 000 RS/$ is used as a conversion factor, which was the value in early November 1993.

The major difference between the refineries is in the crude oil cost, which varies from 30 509 rubles per tonne for Atyrau and 77 459 rubles per tonne in the case of Pavlodar. This wide difference in feedstock cost translates in further distortion by taking a fixed profit on total expenses.

The escalation of crude oil prices over the last two years has been the major concern for all three refineries. Some figures for the Shymkent Refinery indicate that the other expenses have increased faster than crude oil prices, with the possible exception of base wages. Between 1992 and 1993 Shymkent's crude oil acquisition costs have increased at an annual rate of 550 percent. Other operating expenses have increased by 800 percent, while base wages have increased by 480 percent.

3. Ex-Refinery Prices

All three refineries use the standardized calculation system developed in Russia in the early 1970's for calculating ex-refinery prices of individual petroleum prices. The system allows for the calculation of the cost of production for each individual product based on production cost assessments made for each individual processing unit and the intermediate transferred processing stream prices.

The method of price determination is basically a cost plus method which allows the refiner to recover all production costs, and a fixed percentage premium or "profit" on top of direct expenses. Inter-fuel price differentials are determined by production economics for the major products, while a fixed ratio, or differential to crude oil is used for determining secondary products. Mazut, a major product in all three refineries is considered a secondary product, and it is assigned a fixed price ratio to crude oil.

In the past, ex-refinery prices were changed infrequently, and quarterly price determinations were usual. Due to the current inflation pressures and rapid rise in crude oil prices, ex-refinery prices are readjusted frequently. In recent months ex-refinery prices have been readjusted several times in the quarterly planning cycle, primarily in response to crude oil price escalations. The frequency and magnitude of the changes taking place are well illustrated in Figures III-C-2

Determination of ex-refinery prices is the responsibility of the Planning Division in the refinery, which is tasked with the responsibilities of developing quarterly production and pricing projections, and modifying the price computations as needed. Price changes require the approval of the Chamber of Ministers in Almaty.

The pricing system has been computerized at the Pavlodar Refinery, and plans are under way to install a similar computerized system at Shymkent.

Individual Product Prices

Individual end product and intermediate stream prices are determined for each processing unit in the refinery by accounting for all production expenses for each individual unit in the refinery. The raw material/and feedstock costs, and operating expenses are passed through to products on each processing unit.

The price of certain secondary products are fixed relative to crude oil prices. These ratios are fixed, having been determined by Moscow prior to independence. The same ratios have been used since. A few products are

fixed at a subsidized level for social reasons. Some examples of these fixed price relationships in current use are shown in the following Table III-C-4.

TABLE III-C-4
PRODUCT PRICE RATIOS RELATIVE TO CRUDE OIL

PRODUCT	RATIO	FIXED RS/Tonne
Mazut	0.80	
Bitumen	0.50 - 0.75	
Residue	0.80	
Fuel Gas	0.80	
Coke	1.00	
Coke Fines	0.65	
Butane	1.0	
Propane		93 917
Light Naphtha		69 672

The cost of production is distributed equally across all the main products/intermediate streams produced, with the exception of the fixed secondary products.

Ex-refinery product prices for the last two years for the Pavlodar and Shymkent refineries are shown in Figures III-C-2 and III-C-3 respectively. These figures show the close relationship between crude oil and product prices and indicate that the refineries have been very effective in passing through crude oil and operating costs.

Figure III-C-2

Product Prices - Pavlodar Refinery

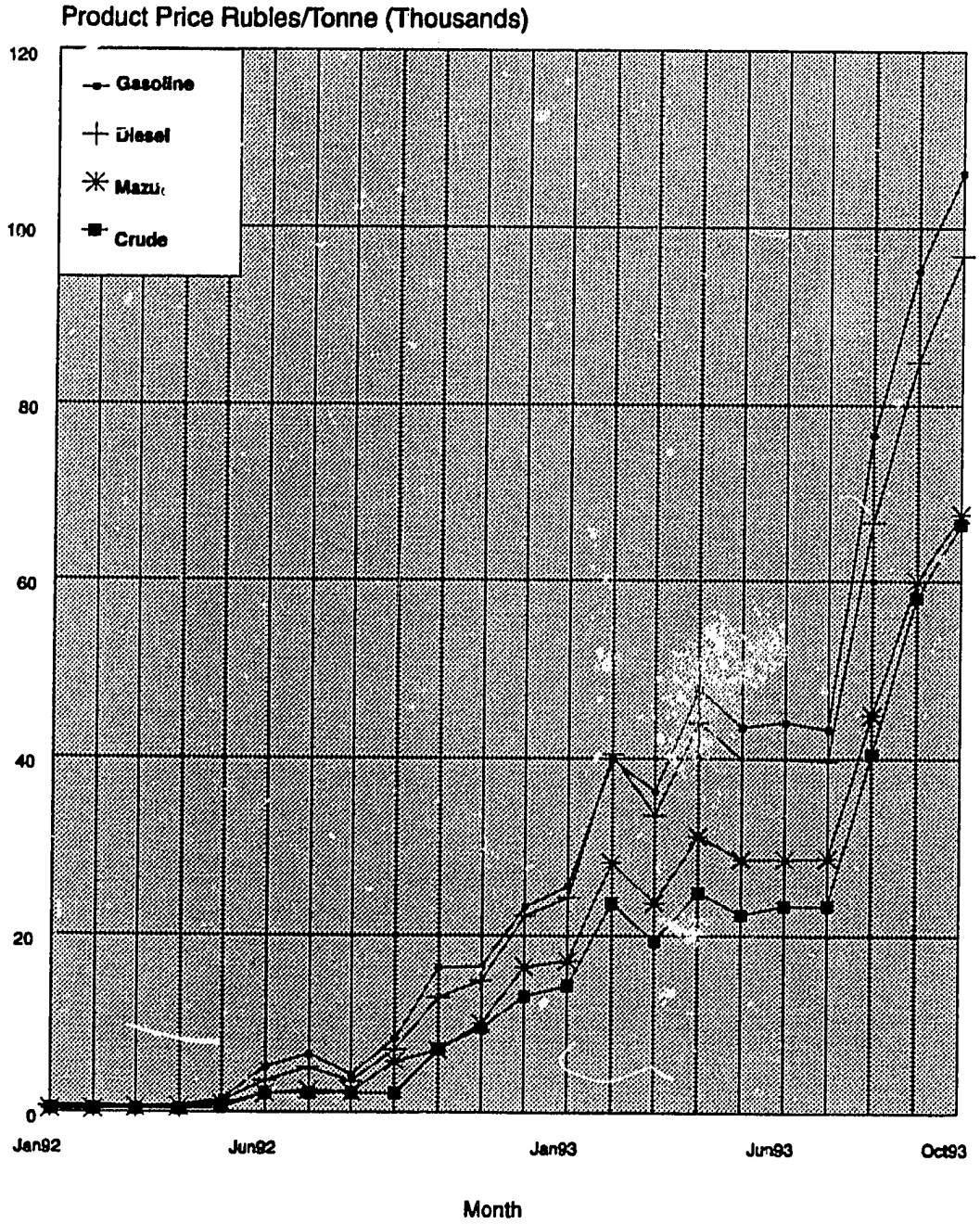

Figure III-C-3

Product Prices - Shymkent Refinery

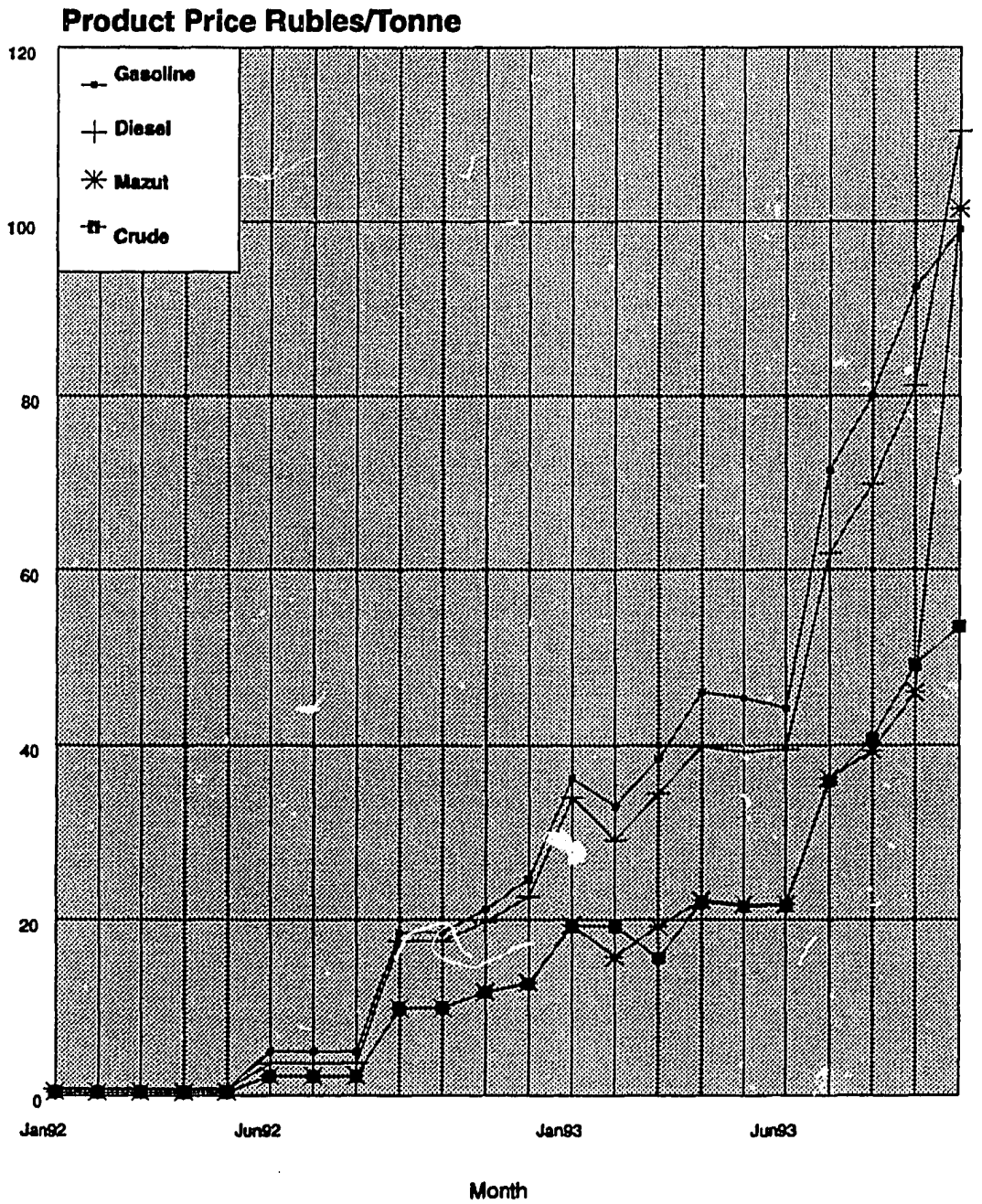

D. MARKETING AND DISTRIBUTION

1. STRUCTURE AND OPERATIONS

The main concentration of this study was the economics and structure of the Kazakhstan refining sector. Since it is impossible to divorce the future of the refineries from the markets they serve, some time and effort was devoted in putting together a profile of the Kazakhstan petroleum demand structure. This overview was of necessity limited due to time availability and the difficulties encountered during the currency transition disruptions encountered during the in country visit.

The obtain an oversight of the marketing activities, discussions were held with the local KNP marketing staff at the two refineries visited (Shymkent and Pavlodar) as well as with the headquarters staff in Almaty. Market related discussions were also held with several sections of the Ministry of Energy, as well as the Ministry of Economics.

Market Structure

Prior to independence the total Kazakhstan consumption of petroleum products amounted to some 23 million tonnes per annum of crude oil and products. Between 1991 and 1992 the consumption of the major petroleum products, declined by approximately 15 percent from 18.7 million tonnes to 15.7 million. Consumption of the major products were not expected to further decline significantly, even though GDP declined by about 15 percent from 1992.

It is generally considered, that the petroleum product consumption decline has now bottomed out and that further erosion will be limited by the basic needs of the agricultural (a major consuming sector) and industrial sectors, irrespective of the outlook for the economy. The short term outlook for petroleum product apparent consumption may be somewhat clouded by a growing inter-republic trade and the export of products into the west in an effort to generate hard currency.

The longer term outlook for petroleum product consumption is unclear. Some Government planning forecasts are looking at rapid resurgence in demand to pre-independence levels. More conservative forecasts of demand, remaining at today's levels past the turn of the century, are considered to be more realistic. The current level of consumption is anticipated to remain flat both in absolute quantity and in relative consumption of individual products.

72

TABLE III-D-1
ESTIMATED NATIONAL CONSUMPTION

PRODUCT	1991	1992	1993	2000E
	THOUSAND TONNES PER YEAR			
Gasoline	4 144	3 448		
Kerosene	1 070	1 000		
Diesel	6 953	5 788		
Mazut	5 970	5 186		
Lubes	82	62		
Bitumen	519	320		
Others				
TOTAL	18 738	15 804		

(1) Not including Refinery Fuel and Losses

Source: Kazakhnefteproduct, IRG

Sectorial Distribution

Agricultural fuel use is the major demand area for petroleum fuels accounting for approximately forty percent of total demand, as shown in Table III-D-2. This is followed by Ministry of Energy uses of mazut (15 percent) for power and district heating. Retail sales of transportation fuels appear under the Ministry of Automobiles amounting to 1.2 million tonnes per year in 1992, approximately eight percent of total petroleum production today. Diesel fuel for rail and jet fuel for air transportation purposes amounted to similar amounts of 1.1 million and 1.0 million tonnes per year respectively.

Agglomerated other uses, consisting of a major proportion (60 percent) of mazut; account for the remaining 30 percent of consumption.

TABLE III-D-2
SECTORIAL CONSUMPTION OF PETROLEUM PRODUCTS

SECTOR	GASOLINE	DIESEL	MAZUT	TOTAL
	THOUSAND TONNES PER YEAR			
AGRICULTURE				
1991	1 648	2 685	0	4 333
1992	1 552	2 629	0	4181
1993				
MINISTRY OF AUTOMOBILES				
1991	513	536	0	1 048
1992	440	447	0	886
1993				
RAIL TRANSPORT				
1991	0	1 075	0	1 075
1992	0	803	0	803
HEALTH CARE				
1991	32	0	0	32
1992	33	0	0	33
1993				
MINISTRY OF ENERGY				
1991	0	0	1 989	1 989
1992	0	0	1 630	1 630
1993				
OTHER				
1991	1 077	1 053	2 451	4 580
1992	799	799	2 017	3 615
TOTAL				
1991	3 269	5 349	4 440	13 058
1992	2 824	4 678	3 647	11 149
1993				

Source: Kazakhnefteproduct, IRG.

Fuel Type Distribution

Mazut accounts for 5.2 million tonnes in 1992 or approximately one third of major products consumed. It is not clear whether this heavy mazut use pattern is demand driven or whether it is production dictated. Two of the three refineries, Shymkent and Atyrau, lack bottoms upgrading capacity, and refinery management indicated a need for residual fuel upgrading to optimize their product slates. KNP and Kazakhenergo, conversely expressed the opinion that mazut use would be increased if it were available. This appears to be substantiated by the reported significant current import of mazut from Russia.

Diesel fuel, the main petroleum product accounted for 40 percent of total petroleum product demand. Diesel fuel accounts for 60 percent of the agricultural market and fifty percent of automotive and other fuels market and the whole of the rail transportation market.

Other petroleum products, especially the production and sale of coke have a significant impact on overall refinery profitability. Insufficient data on these products was available to include them in the overall assessment of the market structure. One point that must be noted, is that unlike some of the other countries in eastern Europe and NIS countries, petrochemicals and petrochemical feedstocks do not play a major role in the Kazakhstan refinery product slates. Some excess naphtha is exported by Shymkent.

Petroleum Product Profile

While the geographical location of the Kazakhstan market is relatively isolated from world markets the relative product refinery slates and market consumptions are of major importance. If Kazakhstan petroleum prices were to be allowed to approach international levels, then the relative product distribution would have a profound impact on refinery revenues and profitability. Figure III-D-1 shows a graphical comparison of the Kazakhstan market profile with that of Europe and the United States. The market profile for Turkey is also shown for comparative purposes. This figure shows the consumption of automotive gasoline relative to the total distillates (gasoline, diesel and kerosene); plotted against the relative amount of mazut use relative to the total petroleum consumption. This simplified graphical comparison shows the following:

Distillate Market - The Kazakhstan distillate market is substantially less gasoline oriented than the US market which is heavily driven by automobile requirements. The relative gasoline demand however is similar to that in western Europe. The major differences are that the Kazakhstan market is highly diesel oriented for agricultural purposes and rail use. This will probably

change as personal automotive consumption increases in the future. By contrast western Europe although it has a higher automobile component has historically forced it's market in the direction of diesel and away from gasoline through heavy differential taxation.

Heavy Oil Consumption - The consumption of mazut in Kazakhstan accounts for 30 percent of total major product consumption which is greater than that of Europe (18 percent) and substantially larger than in the US (8 percent). The consumption of mazut in the US and more recently in western Europe has declined to these low levels through the conversion of power generation facilities to gas, as a result of increasing availability of gas in Europe; and as a result of more rigorous environmental pressures.

The quantity of mazut consumed in Kazakhstan in the future will have very significant investment and profitability implications for the refining sector.

Figure III-D-1

Petroleum Product Profile

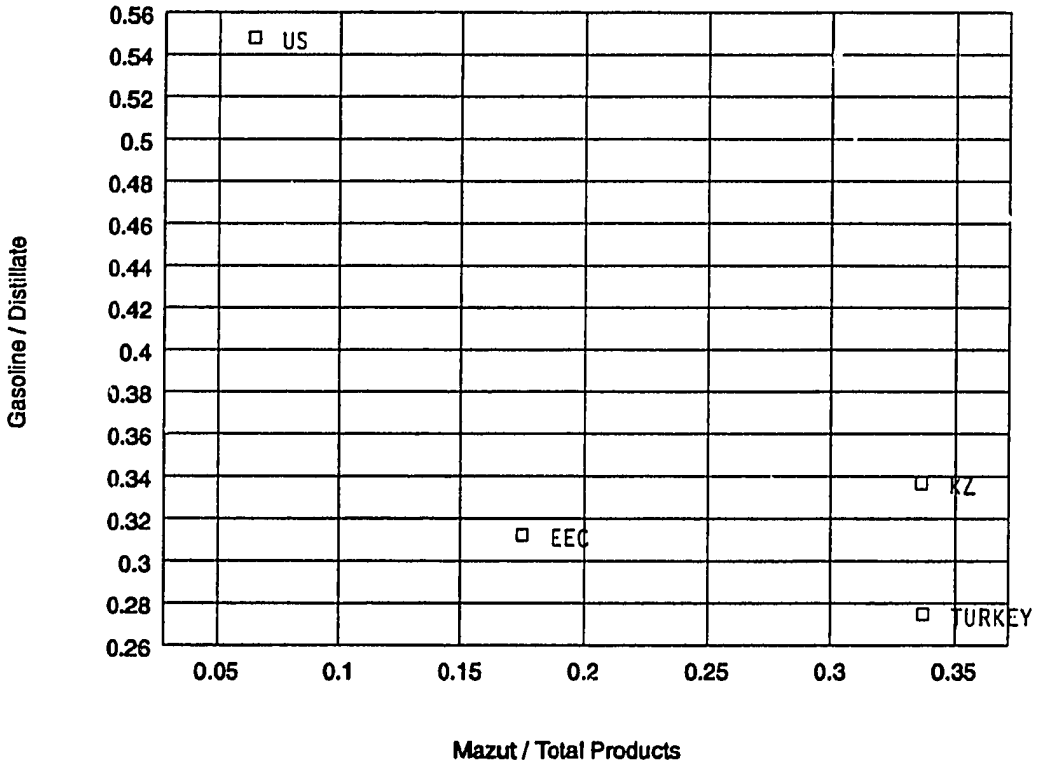

KZ = Kazakhstan Country Average
EEC = European Economic Community
US = United States

Geographical Market Distribution

While the above market profile considers the national market as a whole the regional differences in market profile are expected to be substantial. These regional differences are what will drive the operations of the individual refineries optimum production slates and the inter areas logistics of supply.

Supporting statistics for regional consumption have not been made available.

Imports/Exports of Products

Historically the major trade of petroleum products has been with Russia, with Kazakhstan being a net importer of products. Net imports of product from Russia amounted to 5.5 million tonne in 1991 and 3.4 million tonnes in 1992. In 1993 the imports of products is most probably substantially higher due to shortages of crude oil supply to the refineries and increased export of domestically refined products. In the past level of imports was driven by the insufficiency of domestic refining capacity. With the current downturn in demand domestic consumption should more closely match domestic refining capabilities and on a national basis the country should be self-sufficient.

TABLE III-D-3
PETROLEUM PRODUCT TRADE WITH RUSSIA

	GASOLINE	DIESEL	MAZUT	TOTAL
	THOUSAND TONNES PER YEAR			
1991				
Imports from Russia	1 581	3 132	1 341	6 054
Exports to Russia	38	43	470	551
Net Trade	1 543	3 089	871	5 503
Domestic Consumption	4 144	6 953	5 970	17 067
Russian Imports	37%	44%	15%	32%
1992				
Imports from Russia	1 024	2 124	941	4 089
Exports to Russia	35	34	292	361
Net Trade	989	2 090	649	3 728
Domestic Consumption	3 448	5 788	5 186	14 422
Russian Imports	29%	36%	13%	26%

In the short term, there appears to be some distortion in the petroleum trade patterns as increasing exports of products are made to generate hard currency reserves, and to take advantage of low crude oil prices. Under current regulations the refineries are allowed to trade or barter up to 5 to 10 percent of their production for their own account. This allowance is destined to allow the refiners to satisfy their immediate needs for spare parts, supplies and other short term investments needs. The Shymkent refinery is currently exporting petroleum products, including naphtha and mazut, to markets in Sweden and Switzerland by rail; in addition to increased exports to its traditional markets to the south (Uzbekistan, Kyrgyztan and Turkmenistan). Direct exports by the Shymkent refinery are reported at approximately 100 thousand tonnes in 1993. A significant quantity of the product transferred to KNP is however also exported. Shymkent estimates that approximately 50 percent of its distillate fuels are destined for the southern NIS of Uzbekistan, Tazikistan and

Kyrgyztan. In November 1993 approximately 85 thousand tonnes went by pipeline to Uzbekistan, with a further 54 thousand going to the other NIS by rail.

Operational Structure

KNP has the exclusive rights to the distribution and sale of petroleum products in Kazakhstan. As such the company takes delivery of all refined products from the refineries in bulk at the refinery and is responsible loading and dispatch of products at each refinery. The company is also responsible for external trade of petroleum products with the NIS and other international markets.

KNP operates regional bulk distribution terminals in each oblast, as well as the crude oil and the product pipelines in Kazakhstan. Current product pipelines are limited, the major line running from the Shymkent refinery south to Tashkent. Most of the bulk products are moved by rail.

While KNP has the operational responsibility for petroleum product distribution and marketing this is done under the direction of the Ministry of Energy which supervises and directs overall supply and demand of products and regional needs.

2. Product Pricing

The current petroleum pricing system is a cost plus system that allows for a) the pass through of all operating costs; b) a fixed profit for the operating companies (refineries and distribution); c) uniform national costs for individual products and d) cross subsidization of certain fuels (kerosene and home heating oil) and the collection of revenue for other social purposes.

The determination of wholesale petroleum prices involves the following steps:

- Transfer prices between the refineries and the distribution company KNP are determined by the refineries as described in Section III-C. allowing pass through of refinery operating costs and profit margin. Price changes (which can occur several times a month at present) must be authorized by the Committee of Ministers in Almaty.

- The Committee of Prices (COP) in the Ministry of Economics determines uniform national product prices based on all product supplies (domestically refined and imported); and allowing a pass through of marketing and distribution expenses and fixed profit margin.

KNP makes regional adjustments to the national allowed prices, to accommodate local conditions.

- Product exports are valued at international prices in hard currency through brokered transactions.
- In 1993, agreements with Russia called for the quota delivery of certain petroleum products to Kazakhstan at a fixed price.
- Pass through of price escalations allows recuperation of any product losses in a subsequent period and retroactive price adjustments of customers billings.
- Subsidization of Kerosene and Home heating oil.

Details of price levels and the expense in operating the marketing and distribution system is shown in Table III-D-4, for the major petroleum products - Gasoline, Kerosene, Diesel and Mazut. Details of the computations leading to these results are shown in Appendix F and Table III-D-4.

TABLE III-D-4
PETROLEUM PRODUCT PRICING STRUCTURE
4TH QUARTER 1993

PURCHASE PRICE[1]	GASOLINE	JETFUEL	DIESEL	MAZUT
	RUBLES PER TONNE			
KAZAKHSTAN REFINERIES				
Atyrau	98 750		80 000	35 400
Pavlodar	124 750	114 120	114 250	76 920
Shymkent	123 945	99 169	111 728	62 546
Avg. Ex-Refinery Price	121 019	107 258	104 439	58 396
IMPORTS				
State Resources	324 676	166 376	174 188	
Quota Imports - Russia	236 400		111 900	
Other Imports - Russia	289 000		284 000	115 600
Average Purchase Price	209 553	126 261	182 310	90 363
MARKETING AND DISTRIBUTION				
Expenses	135 103	114 436	95 409	54 857
Profit	27 021	22 886	19 082	10 971
Adjust. Previous Period	2 319	19 643	16 378	9 416
SUBSIDIES				
Losses Kerosene/Heating	2 350	0	0	0
Regulation Fund	19 385	0	0	0
Sales Price[1]	454 550	314 621	339 635	180 654

[1] VAT included
[2] Allowable Profit - 20 percent

86

Observations

During our visit, the question was raised as what the relative price differentials were appropriate for refining and for distribution respectively, since the refineries considered that the cost of marketing to be excessive relative to that for refining. It would appears from the figures shown in Table III-D-4 that the gross marketing margin (wholesale minus ex-refinery price) of 200-300,000 rubles per tonne is four to six times the ex-refinery price margin. By comparison in the west, wholesale prices should be less than 50 percent above ex-refinery prices (excluding taxes).

Some of this large difference may be attributed to a) the impact of the high priced products imports on wholesale price, b) the current very low cost of crude oil which accounts for a major part of refining costs and c) a high transportation component in the marketing expense figure. Nevertheless, the marketing costs (and profit) appear to be relatively high by western standards.

IV. PRIVATIZATION ASPECTS

A. SECTOR RESTRUCTURING

1. CURRENT MASS PRIVATIZATION PROGRAM

The privatization program under direction of the Committee of State Property started in the 1991-1992 time period, and envisages four separate steps:

a. Privatization of Small Enterprises having less than two hundred employees, comprising mostly shops and restaurants.

b. Agriculture, Collective Farms, Food processing and Distribution Companies

c. Mass Privatization - Privatization of companies having up to five thousand employees.

d. Individual Large Projects and Industrial Sectors.

The first stage of privatization of small companies is currently under way and should be completed by mid 1994. Similarly the second phase of the conversion of agricultural enterprises to joint stock companies is in progress. The mass privatization of the larger companies has begun with the identification of the enterprises involved and the conversion of these companies to wholly owned state companies which will be subsequently privatized.

In parallel with the Mass Privatization scheme, studies are currently underway for the accelerated privatization of certain industrial sectors. Three sectors have been chosen for special considerations. These are: a) the oil/gas and petrochemical sector; b) the non ferrous metal sector; and c) the machine tool companies.

Another parallel initiative is the targeting of specific companies for privatization. Ten companies have been chosen for consideration. Of these, three companies will be short listed for accelerated preparation for privatization. The Pavlodar refinery has been included in this list.

<u>Privatization Mechanism</u>

The first step in the privatization process is the formation of a State Holding Company for each sector. This company will be initially wholly state owned. The individual enterprises in the sector are then turned into Joint Stock

companies, with the employees of the enterprise retaining 10 percent of the shares while the state holds the balance.

The next stage will be the exchange of the state's holding against privatization coupons. Each citizen in Kazakhstan will be issued privatization coupons, (These will be agglomerated through Private Investment Funds still to be formed), which will then exchange their coupon holdings against shares of companies being privatized. Eventually private investment and trading of shares will be allowed through the Investment Funds.

In the case of the oil and gas industry, the holding company is Kazakhmunaygaz which was turned into a State Holding Company in September 1993. The KMG holding includes six oil production enterprises, two refineries - Shymkent and Atyrau; two pipeline companies; and several other infrastructure and service companies.

The marketing and distribution enterprise Kazakhnefetproduct is not included in this structure. The status of the Pavlodar refinery enterprise was unclear at the time of the visit in November 1993. It was reported that the Pavlodar refinery would not be included under the Kazakhstanmunaygaz holding company; but would become a subsidiary holding of KRAMBS.

KRAMBS Holding Company

KRAMBS a National Stock Company, is a holding company with major financial activities both domestically and internationally. KRAMBS Bank, in addition to its domestic activities has commercial banking activities in Russia, Turkey and other FSU countries KRAMBS has about forty-five companies outside of Kazakhstan, primarily in the FSU.

In the past KRAMBS was a private company which was nationalized, and is now a wholly owned state company. It's holding prior to nationalization consisted of some forty-seven subsidiary companies. Recently under the current privatization program a further forty enterprises have been added to it's holdings.

In the petroleum and chemical sector KRAMBS will have two main holdings; Neftchem (NC) and KRAMBSMunaygaz. NC will have two major facilities; the Pavlodar refinery and the Atyrau polypropylene production facility. The requirements for converting Pavlodar into a KRAMBS joint stock subsidiary have been completed but not signed. KRAMBSmunaygaz will be an agglomeration of seven companies including oil production (Manguyshlak, Aktubinsk and Embaneft), conversion companies and small distribution companies.

The plans for these two companies are to turn them into an integrated oil company, from oil deposit to final consumer. The plans call for expansion through back integration into oil production both domestically and in Russia (Tymen); expansion of the conversion capacity at Pavlodar; and downstream integration into further transportation and distribution.

2. Major Factors Influencing Privatization

a. Objectives: The objectives of the privatization of the petroleum sector are many and varied, and some of them are sometimes contradictory. It is therefore important to clearly define the real objectives and to develop a strategy to achieve these objectives. Generally the objectives in the privatization of the petroleum sector are understood to include:

i. the improvement in overall economic efficiency of the sector, resulting in the least cost supply of petroleum for the domestic consumer;

ii. the distribution of the wealth from direct state control to private enterprise and the individual citizen;

iii. attracting foreign capital to accelerate the development of the sector;

iv. the liberalization of control and restrictions, consistent with the national need for stability and security of supply.

v. develop the necessary oversight and regulatory State Institutions to safeguard the Nations interests; regulate the natural monopolies; and manage the nations natural resources.

In this study it is assumed that these all of these are the goals of the current privatization program.

b. Issues

<u>Sector Efficiency</u>

The main factors in a free market economy influencing overall efficiency are generally impacted by a) the extent of government regulation of the sector, and b) the extent of competition. Both of these factors are inter-related and must be considered for any sectorial efficiency improvement to be effective. Currently the management of the petroleum sector is directly controlled by "State Order" through the Government in Almaty or indirectly through the two organizations KMG and KNP, who only have minor discretion on their operations. Prices and profit margins are also centrally controlled through out the

petroleum sector. Hence any restructuring of the petroleum sector that does not at the same time include the liberalization of government controls may only have marginal or no impact on overall sector efficiency.

Competition

The Kazakhstan petroleum sector is already successfully working with the major foreign oil companies (Chevron, Mobil, BP, Total et al) in the upstream areas of exploration and drilling of the domestic oil resources. It is generally recognized that these companies will be involved in the future in the down stream operations of refining and marketing and will be a serious competitor for any domestic company. In addition; a very strong petroleum sector to the immediate north in Russia; which has excess crude oil production and refining capability; already provides serious competition for the Kazakhstan petroleum sector. The import of excess products from Russia is already causing dislocations in several NIS countries including Kazakhstan. Because of the relatively small domestic market (when compared to the petroleum industry in the adjacent territories), future competition domestically and from imports, while desirable, could be of some concern.

Capital Needs

Prior to independence, Kazakhstan was forecasting very rapid consumption growth rates which translated to an increased need for new refinery capacity. The plans called for refinery capacity addition and replacements of 18 million tonnes per year by the end of the decade (Table IV-A), on top of an ambitious plan for oil field and infrastructure development. A conservative estimate of total funding requirements facing the downstream industry is of the order of $6 billion, if all the projects were to go ahead. The current down turn in absolute petroleum demand and growth rate should afford Kazakhstan the respite to reassess the future needs of the country and to set up the priorities.

Present thinking on many of the projects being considered is that they will be paid by the export sales of crude oil production and/or products. If this avenue is taken then domestic reform and restructuring is not that important for capital generation. On the other hand if these projects are to be funded by foreign debt or equity, then a liberalized pricing and trade structure will be required to attract foreign investments. In which case, particular importance would be actions to create an open and competitive crude oil and petroleum products market.

TABLE IV-A-1
CAPITAL INVESTMENT REQUIREMENTS

PROJECT	CAPACITY MM T/YR	COST MM US$	DEDICATED OIL SALES THOUSAND T/YR
TRANSPORTATION AND LOGISTICS			
Tengiz/Novorossiyk Crude Line		1 500	
West East Crude Oil Pipeline	14	315	
Product Pipeline Semipalatinsk		50	
Product Pipeline Southern		50	
REFINERIES			
Manguyshlak Heavy Oil Refinery	6	1 500	1 000
Atyrau Refinery			900
Modernization of Existing Products	0	150	
Construction of New Units	3	1 000	
Revamp of Lube Unit	1.5	400	
Energy and Environmental Issues		10	
Shymkent Refinery			
FCC Unit		120	
Expansion	1.5	300	
Energy and Enviromental Issues		10	
Pavlodar Crude Expansion	6	270	
Energy and Environmental Issues		10	
Crude Stabilization - Janjorski	3	270	510
MARKETING AND DISTRIBUTION			
Storage 30 days		180	
Infrastructure (Filling Stations)		?	
OTHER INVESTMENT NEEDS			
Refinery Storage		180	
TOTAL		6 360	2 410

Price and Supply Stability

Liberalization of energy prices was a stated objective of the Kazakhstan Government and was a conditionality imposed by the IMF last year. The intended decontrol of energy prices by January 1994, however did not occur as planned due to inflationary pressures. Petroleum prices continue to be controlled at the production, ex-refinery and wholesale levels. As discussed in Section III ex-refinery prices appear to track crude oil prices as a result of the current pricing mechanism. While domestic crude oil prices are in line with Russian Concessionary prices they are still at about 30 percent of world prices, as are ex-refinery prices. Prices at the retail level, however, are somewhat higher, about 70 to 80 percent of world prices as a result of the inclusion of high priced imports.

The decontrol of petroleum prices is always a sensitive issue due to high consumer visibility of gasoline/diesel prices and also because of oil price volatility (even under normal conditions). In the case of Kazakhstan the advantages of oil price decontrols are somewhat clouded by the influence of foreign prices both in Russia and in World Markets. Excess crude oil and products are already being exported at world prices, and are thus domestic price neutral. Similarly, from a national viewpoint domestic crude oil prices, while they appear to follow Russian oil prices, have no impact on national revenue as long as Kazakhstan crude oil is traded for Russian oil on an essential even exchange basis. Maintaining crude oil prices below world market prices will, however, put pressure on imported product prices, which must be imported due to lack of domestic refinery capacity.

The current refinery pricing system controls ex-refinery prices and profit margins. This cost pass through system perpetuates the lack of incentive for improving operational efficiency. On the other hand, it does protect the economic viability of the refineries during high inflation periods, a problem experienced in many free market driven refineries. Refineries, because of their relatively low profit margins and high operating cost volatility (crude oil prices over 90 percent of cost structure) are ill equipped to survive large feed/product perturbations. Overall, during this period of rapid crude oil price escalation, the refineries are probably better served by having the security of the pass through controls than reaping marginal rewards from short term price improvements.

In some privatization attempts currently in progress, (Peru, Morocco, Pakistan, etc.) advocates for price liberalization suggest the adoption of a border price parity mechanism as a means of liberalization of petroleum prices. For Kazakhstan this may be inappropriate if not impossible given the country's extensive landlocked borders.

Furthermore, it should be recognized that Kazakhstan's current international trade is already extensive. International crude oil and product trade currently is about 175 percent of domestic product consumption, and international prices are already setting the price of the marginal product. Thus while eventual total price decontrol should be the target in the shortest time possible; the implementation of a border price system to replace the current refinery pricing system may be inappropriate.

B. ISSUES AND OPTIONS FOR PRIVATIZATION

1. HORIZONTAL/VERTICAL INTEGRATION

The issue of whether refineries must be forward integrated into the market and/or backward integrated to crude oil supplies is much debated and without any single simple answer. The overwhelming majority of refineries in the west are integrated downstream to marketing and distribution, upstream with crude oil supply, or both. In fact there are probably less than a dozen privately owned stand alone refineries in the world that are not integrated, excluding state owned refineries which protect them from competition.

There is a simple reason for this. Traditionally, the major oil producers and the major oil companies have tended to arrange their transfer prices to take profits either at the well head where tax treatment is more favorable than at the refinery level, or at the marketing level. The refinery operation profits have been squeezed and the refining operation considered a necessary evil to move crude oil to the consumer. Historical refining margins have seldom reflected the true replacement cost pricing for the refining process. Full cost accounting for refinery operations were attempted by the OPEC oil producers for a period of time after the collapse of crude oil prices in 1986, through a netback pricing mechanism without much success. This did not last for long and today refineries continue to be marginally attractive at best, on the basis of world oil prices. At the same time refineries requires a very large investment which, combined with tight and volatile margins make for a risky financial investment. Current experience indicates that it will be extremely difficult to sell (or attract foreign investment) to a stand alone refinery without it being integrated either upstream with oil production or downstream with marketing facilities. Examples of this are many; the difficulty of privatization of the refineries in Argentina (even after an upgrading investment of $800 million); the problems being faced in the privatization of the Moroccan refineries where the marketing and distribution facilities were privatized ahead of the other petroleum sector companies.

2. Competitive Position of Refineries

As mentioned in Section III-D the primary consideration in determining refinery profitability (under international prices) is the product mix produced. In general with mazut selling at a discount to crude oil; the higher the percentage of mazut produced the lower of the total product revenue. Figure IV-B-1 shows the petroleum product profile for the Atyrau, Pavlodar and Shymkent refineries; and for the Kazakhstan market as a whole and also compares them with international markets. All three refineries produce significantly more mazut than international refineries. Furthermore, both Atyrau and Shymkent produce a significantly larger proportion of mazut than does Pavlodar. Thus under free market prices both Atyrau and Shymkent would be at a significant economic disadvantage on product revenue alone. This may be somewhat mitigated by logistic and other considerations, but would leave them economically tenuous.

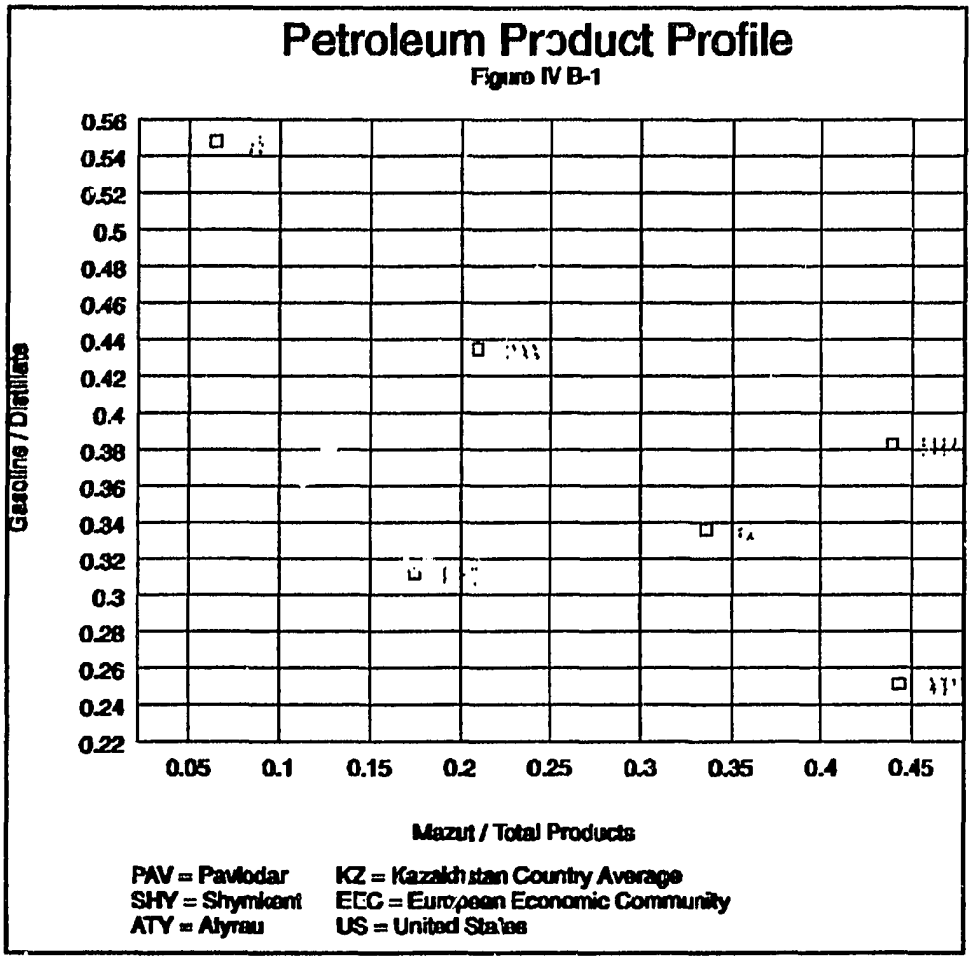
Petroleum Product Profile
Figure IV B-1
Gasoline / Distillate
0.56
0.54
0.52
0.5
0.48
0.46
0.44
0.42
0.4
0.38
0.36
0.34
0.32
0.3
0.28
0.26
0.24
0.22
0.05
0.1
0.15
0.2
0.25
0.3
0.35
0.4
0.45
Mazut / Total Products
PAV = Pavlodar
SHY = Shymkent
ATY = Atyrau
KZ = Kazakhstan Country Average
EEC = European Economic Community
US = United States

C. PRIVATIZATION IN OTHER COUNTRIES

For most of the earlier part of this century, the oil industry was dominated by the major international oil companies both in their home markets (US and Europe) and internationally. In the post World War period, however, more countries decided to take control of their domestic oil resources through the establishment of National Oil Companies. They perceived the establishment of National Oil Companies (NOC) as a means of extending the state ownership of their mineral wealth through production to refining and then marketing and distribution. By the mid 1970's there were more than 90 NOCs throughout the world primarily in the developing countries, but also in such countries as Canada, the United Kingdom, France, The Netherlands and Norway. Today twenty seven of the top 50 oil companies are NOCs.

A few NOCs, that have solid crude oil reserves and a financial base, have taken an expansive posture through the integration downstream into foreign refining and marketing positions. Examples of this are the expansion of the Kuwait National Petroleum Corportion into refining and marketing in Europe (prior to the Gulf War); the Saudi Arabians joint venture with Texaco in the Star Corporation; and the Venezuelan acquisition of US based refining capacity. In fact some NOCs maintain today that the integration into foreign downstream activities is essential for establishing markets for their crude oil in a crude oil excess world.

On the other hand, some other countries have taken a less favorable outlook on their NOCs and are looking at restructuring their involvement in the petroleum sector. This change was caused by a number of factors. After the Oil Embargos in the 1970s, the international oil industry became more complex than in the pre-embargo days and became considerably more volatile. This required a level of sophistication and technical expertise that was not readily available to countries not involved in the international oil marketplace. Also, the debt crisis of the 1980s and the high oil prices meant that countries had to take a more critical look at the efficiency of their petroleum sector and the ability of the sector to respond to changing times. The changes taking place in eastern Europe and the FSU have further added to the inventory of countries looking at the restructuring of their petroleum industries.

While there is considerable activity in economic restructuring and privatization in many countries, the petroleum sector tends to be the last to be restructured. This is especially true for the refining subsector. Some reasons for this are: the strategic nature of the industry; the petroleum sector is generally a significant source of Government revenue; and the sensitivity and high visibility of petroleum product prices on the every day standard of living of the population. It is thus understandable that while there is considerable lip service being paid to privatization there are only a few concrete examples of completed privatization, at this time. This could change in the near future.

Restructuring and Privatization is going on in both western and eastern Europe; Latin America; Africa and Asia. Some of these activities are relevant to the activities currently proposed in Kazakhstan.

Europe

France- Elf Aquitaine is a fully integrated oil company that was started in the 1950s to exploit the newly discovered lacq gas reserves in the southwest region of France. Since it's origin it has grown into a multi-billion international oil company under the tutelage of the state. The French Government recently sold off a major portion of its shares, decreasing its participation from 51 percent to 14 percent raising a total of 5.61 billion dollars from international investors.

East Germany- Prior to the unification of East and West Germany the petroleum sector consisted on two companies; one (Intrac) was responsible for production refining and exports , while storage transportation and distribution was handled by a separate company (Minol). The country had two major refineries at Schwedt and Leuna and two smaller plants with a total capacity of 20 million tonnes per annum. The Schwedt refinery was privatized in July 1991 by the Trehand which is responsible for German unification. The Leuna Refinery took considerably longer to privatize due to a number of environmental hurdles. The refinery was finally acquired by a consortium headed by Elf Aquitaine in July 1992. In both cases the driving force behind the acquisition of the two refineries was the access to a large and expanding petroleum product market. Since unification there has been a upturn in petroleum consumption in the former German Democratic Republic (GDR) rising from 14.7 million tonnes in 1990 to 17.5 million in 1993, as a result of a dramatic increase in automobiles (which increased from 4 million to 6.3 million during this period) and an increase in fuel oil use for heating purposes replacing lignite. The decontrol of the petroleum market has also attracted investment by the major companies in marketing and distribution.

Eastern Europe- Deregulation and Privatization of the refinery sector in eastern and central Europe is still in the initial stages and much effort is still being expended in trying to decide on the best way of deregulation of the markets and in setting up the structure of the refineries for eventual privatization. Major stumbling blocks that remain to be resolved are the question of environmental clean-up which in some cases will be severe, and the establishment of liability laws. Another problem is unrealistic expectations by some refiners who do not see the regional overcapacity facing the region as a whole. It would appear that it will be sometime before eastern European governments deregulate their petroleum sectors, and provide a suitable environment for attracting private investment in the sector.

Latin America

In line with the overall economic liberalization and restructuring taking place in Latin America, the petroleum industry is on a fast track to privatization in a number of countries. Most note worthy is the long-term decontrol that has been in effect in Chile for the last twelve years; the recent successful privatization of Yacimientos Petroliferos Fiscales (YPF) and Gas del Estado (GdeE) in Argentina; and the current privatization plans in Peru.

Chile- The Chilean experience with the liberalization of prices and the absence of margin controls either at the refinery or retail level is frequently pointed to as an example of the advantages of free market forces. Chile abolished price controls and liberalized the access of foreign crude oil and products to the Chilean market in the late 1970's. To prevent excessive market price swings in response to international or other price perturbations a system of border parity prices was implemented. Petroleum product landed costs (world market prices with the associated freight, handling and other associated import expenses included) were used as a target price for ex-refinery sales prices. The actual transfer price between refinery and marketer were left to market forces with the refiner free to set prices and the marketer to import product as deemed fit. Major deviations from the target price (in excess of 5 percent) requires Governmental approval. The Government has reportedly also established a stabilization fund to moderate fluctuations in product prices.

It should be noted that although anyone can import products and market petroleum products the refineries, while autonomous are still majority state owned. Also, it should be noted that the two refineries are both complex refineries, both having catalytic cracking and the refineries have the logistical advantage of being removed from competition from the major world markets.

Argentina- The recent successful privatization of Yaciementos Petroliferos Fiscales (YPF) in the summer of 1993 is the most recent and most noted examples of the privatization trend extending to countries outside the OECD countries.

YPF was founded in 1922 as a public enterprise responsible for the development of the oil industry in Argentina. Initially YPF was tasked to develop the Argentinian petroleum sector and develop the self-sufficiency of the country in oil and products. But over the years YPF became the cash generator for the government, the vehicle for subsidizing special segments of the economy, and the source of special privileges for the labor sector. In 1977, YPF was converted to a wholly owned state company in an attempt to make it more efficient while decreasing its dependence on the State Budget.

Over the years, however, the financial structure of the company continued to deteriorate to the extent that in 1989, YPF had accumulated a debt of US$4.5

95

billion to foreign banks, mostly incurred on behalf of the Government for balance of payment purposes. Argentina was also beginning to run out of proven oil reserves, being faced with either accelerated exploration and development or the need for increased foreign exchange payments for oil imports.

The deteriorating position was attributed to the monopolistic position of YPF in oil purchasing and sales and distribution; the role of YPF as the regulator of private sector competitors; the Governments fixing of refinery profit margins resulting in losses for YPF; unrealistic product price controls by the Government; and the imposition large and excise taxes destined for various subsidies. Finally YPF was not profit oriented and did not have access, nor was it allowed to accumulate the finances needed to invest in the needed expansions programs.

The decision was made by the Menem Government in 1989 to reform the Public Enterprise's with the objective of reducing the role of the state; increase sector efficiency; and to promote private sector investment. Tax reforms were implemented, the fiscal deficit was reduced sharply and the financial system was rehabilitated. Foreign trade restrictions were largely eliminated.

In 1991, the new policies brought about large capital inflows. Some of the capital inflow was in the form of debt/equity exchanges in the privatization of some of the major public enterprises i.e the airlines, the railroads, tele-communication companies.

YPF accounted for almost all of the crude oil production in Argentina; 80 percent of natural gas production and reserves; all transportation infrastructure; about 70 percent of the refining capacity in the country (30 percent controlled by Shell and Exxon); Half of all the Marketing and Distribution; and all exports of crude oil and products.

The Menem Government decided that the deregulation of the Petroleum sector and the privatization of YPF were needed to be able to attract the necessary investments that were needed. The Government decided on a four step approach. This included:

- Liberalizations of Petroleum prices to allow the market place to balance supply and demand;
- Remove barriers to the import and export of crude oil and products allowing access to the world markets and increasing competition;
- Allow the participation of the private sector in exploration and development; and
- Restructuring and Privatization of YPF.

The first three steps address the changes needed in government policy and regulation require to establish an environment conducive to efficient participation by private and state companies alike, while at the same time safeguarding the interests of the state. In matters of policy, the Government relinquished control of prices, profit margins and corporate subsidy; while maintaining control on taxation of the sector, and the supervision of exploration and development activities. Three major Government decrees dealing with Crude Market Competition, Product market competition and Import/Export Trade were enacted in 1989, which allowed a transition period of approximately two years for the decontrol of the petroleum sector.

In matters of regulation, the Government established responsibility for a) monitoring of common carrier regulations over the natural monopolies such as pipelines, transportation and shipping, etc.; b) regulation of safety and environmental standards; and c) standardization and certification of installations. In 1990, the Government enacted decrees establishing new taxation regime for petroleum products; and the regulation of oil pipelines under YPF monopoly.

Privatization- In December 1990, the Government prepared a decree converted YPF into a fully autonomous state owned corporation required to operate in competition with the private sector. This decree was enacted two years later, establishing YPF as an integrated oil company, with an open capital structure, with a majority state ownership but with a management independent off state control. Stock ownership in the company was through four classes of shares: Class A shares representing the 51 percent state ownership; Class B share amounting to 39 percent of the total that may be purchased by the oil producing Provinces; Class C share allocated for purchase by the employees of YPF amounting to 10 percent of the total; and the remaining balance being Class D shares that could be sold to the private sector. Furthermore the state and Provinces were required to jointly sell at least 50 percent of the shares of YPF within three years of distribution.

As part of the privatization process, a major restructuring was undertaken and resulted in the divestiture of non-core assets consisting of approximately twenty properties and subsidiaries for a total sum of US$ 1.6 billion. In the summer of 1993, a public offering of YPF share listed on the New York and other foreign stock exchanges took place raising a further US$ billion.

The privatization effort was carried out under the direction of a Government appointed external chief executive serving as a Director of Privatization. The World Bank provided the financing for the support, organization, and technical assistance of the privatization which amounted to some US$ million.

TABLE II A-2
1992
MAJOR PRODUCT SLATE COMPARISON
KAZAKHSTAN REFINERIES

PRODUCT	REFINERY						
	ATYRAU		PAVLODAR		SHYMKENT		NATIONAL AVERAGE
	MT	%	MT	%	MT	%	%
LPG	13 060	0.30	183 700	3.0	54 931	0.9	1.5
Gasoline	488 922	11	1 875 800	30.5	1 106 733	18.3	21
Kerosene	63 434	1.4	525 600	8.5	503 620	8.3	6.6
Diesel and Light Fuel Oil	1 443 438	32.6	1 824 900	29.6	1 578 821	26.1	29
Heavy Fuel Oil (Mazut)	1 991 192	44.9	1 212 500	19.7	2 539 578	42.0	34.5
Coke	77 444	1.7	63 800	1.0	---	---	0.8
Bitumen	---	---	275 800	4.5	---	---	1.6
Others [1]	179 902	4.1	198 250	3.2	264 487	4.4	3.9
Vacuum Gas Oil	175 653 [2]	4.0	---	---	---	---	1.1
	4 433 045	100.0	6 160 350	100.0	6 048 170	100.0	100.0

[1]Sulfur, Fuel Gas, Losses, Etc.
[2]Atyrau VGO now sent to Heavy Fuel Oil Pool.

TABLE II A-3
COMPARATIVE CRUDE UNIT UTILITY CONSUMPTIONS

	UKRAINIAN UNIT[1]	U.S. CRUDE UNIT[3]	EASTERN EUROPEAN UNIT[4]	KAZAKHSTAN		
				ATYRAU CRUDE UNIT	PAVLODAR CRUDE UNIT	SHYMKENT CRUDE UNIT
Feedstock, Sp. Gravity	0.88	0.825	0.865	0.858	0.836	0.834
Fuel, Kcal/mt Crude	219 113 [2]	153 650	153 000	139 300	182 249	158 170
Steam, Kcal/mt Crude	24 964	14 545	28 140	70 823	24 029	30 352
Cooling Water, m^3/mt Crude	12.2	20.8	0.4	N/A	0.96	N/A
Electricity, kWh/mt Crude	8.84	2.38	5.0	8.99	8.61	6.03
TOTAL, as Kcal/mt	272 613	186 400	193 400	231 699	227 518	202 994

[1]Crude and Vacuum Distillation
[2]As Diesel Fuel
[3]From Appendix E
[4]Crude/Unit

1992 REFINERY FURNACE ANALYSIS

	ATYRAU	PAVLODAR	SHYMKENT	TOTAL
Fuel Oil, mt	110 267	111 651	35 021	256 939
Fuel Gas, mt	48 551	262 425	146 994	457 970
TOTAL, mt	158 818	374 076	182 015	714 909
FUEL COST				
A) World Price $/mt[1]	70.00	70.00	70.00	
B) Refinery Price $/mt	20.00	20.66	14.20	
POTENTIAL YEARLY SAVINGS				
A) World Price and Save 10%	$1 111 726	$2 618 532	$1 274 105	$5 004 363
B) World Price and Save 20%	2 223 452	5 237 064	2 548 210	10 008,726
C) Refinery Price and Save 10%	317 636	772 841	258 461	1 348 938
D) Refinery Price and Save 20%	635 272	1 545 682	516 923	2 697 877

[1] Set at 80% of Crude Oil Cost

Recent studies on continuing energy efficiency efforts in the United States show approximately 1% to 2% per year efficiency improvements over the past five years, and over one third since the energy reduction efforts began in the early 1970's. A program to reduce energy consumption in Kazakhstan should easily approach the U.S. experience.

BASIS FOR REFINERY SELECTION

The review of the Atyrau, Shymkent, and Pavlodar facilities considered in this study was set by agreement between U.S. AID, Kazakhstanmunaygaz, and John Brown in October, 1993.

1. ATYRAU REFINERY

The Atyrau Refinery is located in the Western part of Kazakhstan in the city of Atyrau (formerly Guryev) at the north end of the Caspian Sea on the Ural River. The town is reported to have a population of over 158 000 people. The refinery is ideally situated to take advantage of the large oil deposits found in the nearby Western Kazakhstan region. The facility was originally constructed in 1945 as a Lend/Lease refinery. The majority of the older, original units have been shutdown, with newer processing units placed in service in the 1968-1989 time frame. The current capacity of the refinery is in the 4.5 million mta range. Processing units include atmospheric crude and vacuum distillation, a catalytic reformer, a delayed coker and a calcined coking unit.

The other industry in the Atyrau area is reported to consist of machine building and metal working, the largest of which is involved in repairs of crude oil and natural gas producing equipment. There is also a chemical industry based on borates, salt and gypsum as well as polyethylene and propylene production.

2. THE PAVLODAR REFINERY

The Pavlodar Refinery is located in the North Eastern Region of Kazakhstan, close to the Siberian border. The population of Pavlodar approaches 500 000 people. Crude oil supply is obtained via pipeline from the West Siberian oil fields. The same pipeline continues through to Shymkent in Southern Kazakhstan. The configuration of this line Southwest to the Chardzhou Refinery in Northern Turkmenistan is not complete. The refinery became operational in 1978 and is relatively modern from a CIS viewpoint. Processing units include crude atmospheric and vacuum distillation, catalytic reforming, kerosene and diesel hydrosulfurizers, gas fractionation and separation, a

visbreaker, a vacuum gas oil hydrodesulfurizer, a FCC, a gas concentration and a hydrogen plant. The output capacity of the refinery is on the order of 7.5 million mta.

The Pavlodar Oblast produces over half of the country's output of electric energy. There are major areas of coal fields and future plans call for expansion of the power plants for the generation and export of electrical power. Ferrous alloy production is also a significant part of the Oblast's industrial base.

3. The Shymkent Refinery

The Shymkent Refinery is located in the Southern part of Kazakhstan in the city of Shymkent (Chimkent on older maps) with a population approaching 500 000 people. Crude oil used is obtained via a leg of the Siberian Pipeline system and consists of a 90/10 mixture of low sulfur, West Siberian and Central Kazakhstan Kumkol crudes.

The refinery became operational in 1985 at 6 million mta and is relatively modern from a CIS viewpoint. Processing units include atmospheric and vacuum distillation and gas fractionation (presently idle), a catalytic reformer, kerosine (idle) and diesel hydrodesulfurizers, a delayed coker and a sulfur plant. The current capacity of the refinery through a revamp program, is reported to be a nominal 7.5 million mta.

The area is rich in mineral deposits including zinc, lead, barium and silver. Other industry in the area consists of non-ferrous metallurgy (based on lead-zinc ores). There are also machine building and metal working industries as well as agricultural machinery production. The chemical industry includes yellow phosphorous and related compounds, tire manufacturing, cement plants and related construction components.

V. TECHNICAL REFINERY - OPERATIONS

A. INTRODUCTION

In May of 1993, The United States Agency for International Development (USAID) awarded a contract to a consortium of firms headed by Camp, Dresser, and McKee in Cambridge, Massachusetts.

The delivery order for this work was made through an "IOC", type of contract for which the consortium was the successful entity, based on a competitive bidding process. Participants in this delivery order, or work assignment, included Camp, Dresser, McKee, as the prime contractor, the Chicago office of John Brown as the lead firm in this work, and International Science and Technology, Inc. (CISTI) as the source of Technical Economists specializing in petroleum refining. John Brown was selected based on its experience in oil refining, prior similar work in the refining industry of the Central and Eastern countries of Bulgaria, Czechoslovakia, Romania, and Poland, and extensive background in the former USSR and Eastern block countries.

The Chicago office of the John Brown organization was assigned to conduct a techno/economic study of the petroleum refining industry for the Republic of Kazakhstan. This section of the report covers the technical review and characterization of the countries three refineries; Atyrau, Pavlodar and Shymkent. The objective of this technical work was to review refining operations for the purpose of not only characterizing individual refineries, but also to audit and evaluate in order to present opportunities for improvements in operations, reductions of energy use and alleviate emission problems.

B. ATYRAU REFINERY

1. SUMMARY DESCRIPTION OF THE REFINERY

a. Refinery Descriptions

The Atyrau Refinery is located in Western Kazakhstan on the Northern edge of the Caspian Sea and covers an area of 2 400 000 square meters. The City of Atyrau, formerly named Guyrev, is a town of about 158 000 people. The refinery was originally constructed in 1945 under the U.S. Lend-Lease program and has a name plate capacity of 5 million mta of crude oil throughput, although the local staff rates the facility closer to 4.5 million mta. The original and current refinery configuration and nameplate capacities of individual units is shown on Table V B1a-1. As can be seen from this table, the refinery has been modernized over the years, with many of the original, older units since shutdown.

Geographically, Atyrau is ideally situated for further expansion and modernization. The refinery is located next to the major oil fields in Western Kazakhstan, is the focal point for crude oil pipelines in the area and has a qualified staff and infrastructure in place to use as a basis for an expanded higher capacity modern refining complex. Two thousand one hundred and eighty people are reportedly employed in the larger complex, with thirteen hundred in the refinery.

Atyrau management has requested funds to add units and modernize the existing plant; an activity which we strongly encourage. The future plans section of this report outlines these plans.

Atyrau has already been organized into a joint stock company, along the following ownership lines:

- State Government 31%
- Refinery 37%
- Foreign Investors 10% (None, as of November 1993)
- Joint Venture Partners 10%
- Individuals and Others 12%

A block flow diagram for Atyrau is shown on Drawing No. 2287-22-10-40. The 1992 product slate and overall material balance is shown in Table V B1a-2. Processing unit operating data for 1992 is contained in Table V B1a-3.

The John Brown team would like to acknowledge the excellent cooperation and assistance provided by the Atyrau refinery staff, especially the following people and those in their departments:

- Vladimir V. Gafner - General Director
- Galymzhan Zh. Amanturlin - Chief Technologist
- Saduokhas A. Meraliev - Chief Engineer
- Temirgali I. Bekesov - Deputy Chief Engineer
- Valdimir A. Serdyuk - Deputy Chief, Capital Construction
- Boris H. Zagumenov - Deputy Chief-PTD
- Nikolay P. Panchenko - Chief, Instrumentation

The John Brown visit to Atyrau took place between 16 and 19 November 1993.

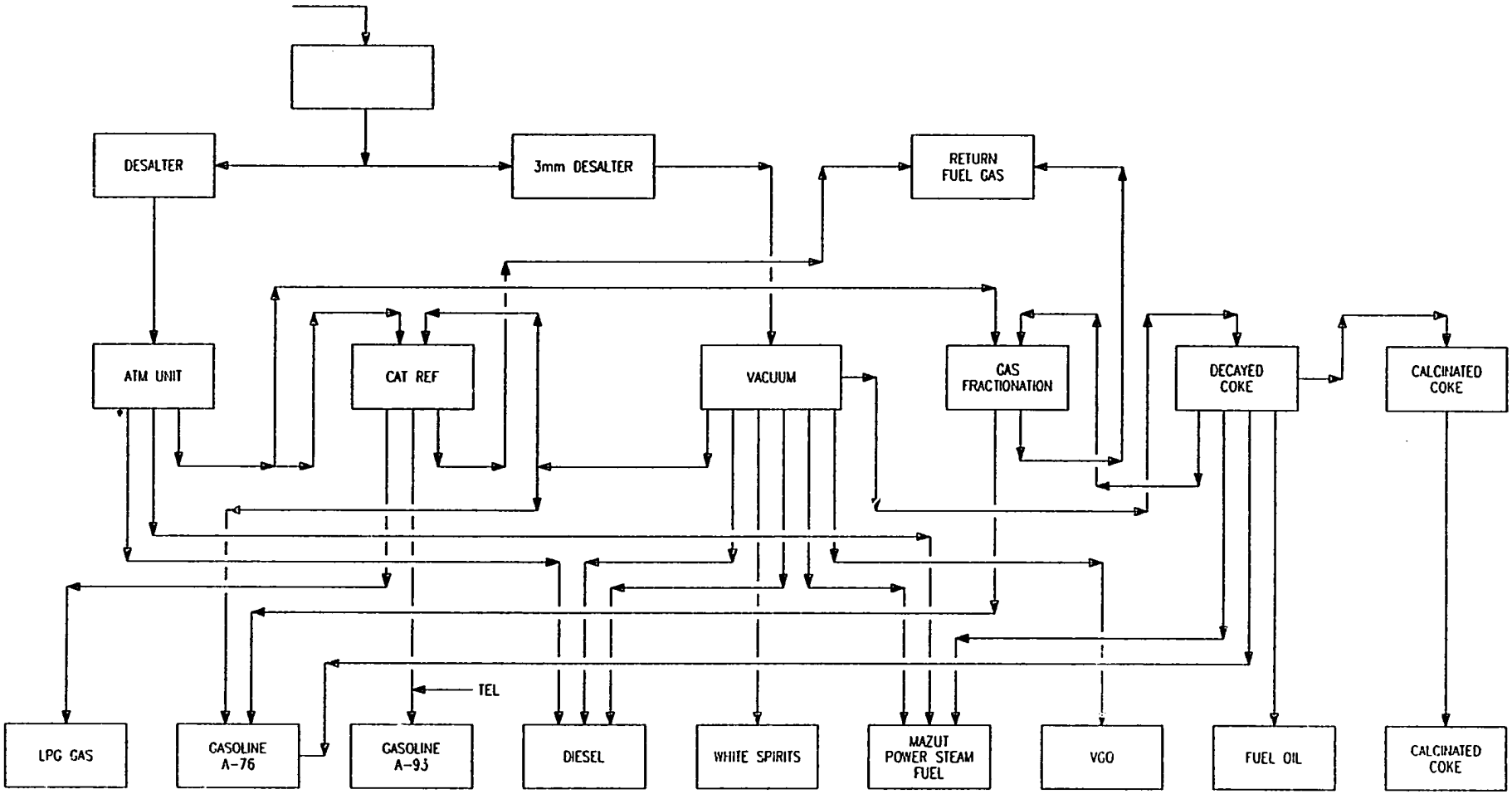

JOHN BROWN
CHICAGO ILLINOIS

ATYRAU REFINERY
REFINERY BLOCK FLOW DIAGRAM

DATE	REV	BY	APPR	DESCRIPTION

DWG. No. 2287-22-10-40 | A

b. Crude Oil and Other Feedstock Supply

There are two pipelines that serve the refinery, one from the Emba field to the Northeast of Atyrau and the other from the East and South from Tengiz and the other fields along the West Caspian Sea. The Atyrau area is also the focal point for the export pipelines, one Northward along the Ural River to Uralsk and Samara in Russia and the other Eastward to Astrakhan and Grozny, as well as to the proposed expansion to Novorossiysk on the Eastern Black Sea. At capacity, crude storage at Atyrau equates to 4 days supply of feedstock.

The major crudes presently in use are Martishy from the Emba area and Mangyshlak from the oil field South and East of the city. The crude split is as follows:

- 2 million mta crude unit; not more than 10 percent Martishy
- 3 million mta crude unit; not more than 15 percent Martishy, with the remaining amount for both units from the Mangyshlak field.

The Tengiz crude is not in use, although it is available; expectations are that future use will be up to 10 percent of crude oil throughput. The Tengiz crude supply line is reported to be 1 000 mm, in diameter. Crude analysis data is shown in Tables V B1b-1, 2, 3, and 4.

TABLE V B1a-1
REFINERY UNITS AT ATYRAU

THE ORIGINAL REFINERY				
UNIT NAME	**LICENSOR**	**CAPACITY MTA**	**START UP**	**SHUT DOWN**
Atmospheric Distillation	Badger	550 000	1945	---
Thermocracker	Badger	340 000	1945	1986
FCC Unit	Houdry	313 000	1945	1979
Gas Fractionator	Badger	300 000	1948	1988
Alkylation Unit	N/A	60 000	1948	1988
THE CURRENT OPERATING SITUATION				
Atmospheric Distillation	Badger	2 000 000	1945	---
Atmospheric/Vacuum Unit	Azgiproneftechin, Baku	3 000 000	1968	---
Catalytic Reformer	Lengiproneftechin	300 000	1971	---
Coking Unit	Bushgiproneftechin	700 000 (feed)	1980	---
Calcined Coke	N/A	140 000 (feed)	1989	---

TABLE V B1a-2
ATYRAU REFINERY
OVERALL MATERIAL BALANCE, 1992

	DESCRIPTION	WT%	MTA
	INLETS		
	Desalted Crude Oil Including	99.2	4 399 001
	Mangyshlak	(84.4)	(3 739 878)
	Martyshi	(13.6)	(602 425)
	Emben	(0.3)	(15 767)
	Tengiz	(0.5)	(23 014)
	Kentau	(0.1)	(3 500)
	Stetlan	(0.2)	(8 007)
	Makat	(0.1)	(6 410)
	Waste Oil	---	99
	Tetraethyl Lead Solution	0.05	404
	Gasoline from Uzen	0.35	15 702
	Losses from Desalting	0.4	17 839
	TOTAL	100.0	4 433 045
	OUTLETS - PRODUCTS		
	Premium Gasoline B 91/115 (Aviation)	0.005	213
	Regular Gasoline A-72	2.1	95 109
	Regular Gasoline A-76	7.5	333 817
	Premium Gasoline AU-93	1.3	59 783
	Diesel Oil **TOTAL**	29.0	1 286 743
	Low Sulfur Content Diesel Oil, High Quality		(643 917)
	Heavy Diesel Oil		(640 918)
	Winter Diesel Oil		(1908)
	Fuel Oil for Home Use	3.5	156 695

TABLE V B1a-2 (continued)
ATYRAU REFINERY
OVERALL MATERIAL BALANCE, 1992

	DESCRIPTION	WT%	MTA
	White Spirits	1.4	63 434
	Vacuum Gas Oil (Export)	0.6	24 811
	"Mazut" (Heavy Fuel Oil) TOTAL Including:	44.9	1 991 192
	Mazut with Sulfur Content ≤ 0.5wt%		(665 554)
	Mazut with Sulfur Content ≤ 1wt%		(1 325 638)
	LPG	0.3	13 060
	Coke TOTAL Including:	1.7	77 444
	Raw Coke		(2 836)
	Calcined Coke		(74 608)
	Vacuum Gas Oil	3.4	150 842
	Semi-Products	-0.7	- 32 839
	Fuel Consumption, TOTAL Including:	3.8	1 66 966
	Fuel Gas		(85 707)
	Mazut		(81 258)
	Losses	1.0	45 775
	TOTAL	100.0	4 433 045

TABLE V B1a-3
PROCESSING UNIT OPERATING DATA
1992

UNIT	FEED THROUGHPUT TONNES	ON-STREAM DAYS
Desalter for Atmospheric Crude Unit	1 732 071	341
Atmospheric Crude Unit	1 725 165	341
Desalter for Atmospheric/Vacuum Unit	2 739 014	332
Atmosphere/Vacuum Unit	2 728 081	332
Catalytic Reformer	277 022	320
Delayed Coking Unit	662 279	317
Calcined Coker	95 876	311

TABLE V B1b-1
MANGYSHLAK CRUDE OIL SPECIFICATION

DISTILLATION TEMPERATURE, °C	VOL% DISTILLED
IBP - 120	5.25
120 - 150	3.32
150 - 170	2.7
170 - 180	1.24
180 - 190	1.0
190 - 200	0.96
200 - 210	0.38
210 - 230	1.28
230 - 300	13.86
300 - 320	3.95
320 - 330	0.92
330 - 340	1.37
340 - 350	2.2
350 - 360	1.65
360 - 370	3.09
370 - 380	2.65
Cumulative Vol% to 380°C	45.82
Density @ 20°C, kg/m³	858.2
Sulfur Content, wt%	0.45
Chloride Content, mg/liter	118
Water Content, wt%	0.14
Freezing (Solidification) Point, °C	26
Viscosity at 50°C, cs	17.0
Ash Capacity, wt%	0.028
Coking Capacity, wt%	3.8
Sediment (Inert) Content, wt%	0.020

TABLE V Bb1-2
MARTISHI SPECIFICATION CRUDE OIL

DISTILLATION TEMPERATURE, °C	VOL % DISTILLED
IBP - 120	0.49
120 - 150	4.8
150 - 170	3.18
170 - 180	1.22
180 - 190	1.43
190 - 200	1.78
200 - 210	0.49
210 - 230	2.98
230 - 300	19.2
300 - 320	5.74
320 - 330	1.82
330 - 340	1.75
340 - 350	3.73
350 - 360	1.83
360 - 370	2.0
370 - 380	1.75
Cumulative Vol% to 380°C	54.19
Density at 20°C, kg/m^3	840.0
Sulfur Content, wt%	0.26
Chlorine Content, wt%	1.08
Water Content, wt%	0.04
Freezing (Solidification) Point, °C	-42.0
Viscosity at 50°C, cs	1.0
Ash Capacity, %	0.013
Coking Capacity, Wt%	1.1
Sediment (Inert) Content, wt%	0.012

TABLE V B1b-3
TENGIZ CRUDE OIL SPECIFICATION [1]

Density at 20°C, kg/m³	800
Viscosity at 50°C, cs	1.2
Water Content, wt%	Trace
Chloride Content, mg/l	63
Sulfur Content, wt%	0.63
H_2S Content	None
Mercaptan Sulfur, wt%	0.006
Acidity, mg KOH/g crude oil	0.10
Sediment (Inert) Content, wt%	0.05
Freezing (Solidification) Point, °C	-40
Paraffins Content, wt%	2.9
Asphaltenes, wt%	0.148
Silica-Gel Resins, wt%	4.33
Light Products to 180°C	35.22%
Light Products to 380°C	79.61%

[1] 1988 Analysis

TABLE V B1d-4-(1)
TENZIG CRUDE OIL SPECIFICATION
1991 ANALYSIS

PROPERTY	
Density, kg/m³, 20C°	790.0
Sulfur Content, wt%	0.559
Chlorides, mg/decimeter	18
Water, wt%	0.03
Freezing (Solidification) Point, C°	-11
Viscosity, cs 50C°	1.7
H_2S, wt%	None
Mercaptan Sulfur, wt%	0.0735
Ash, wt%	0.015
Coking Capacity, %	0.365
Sediment (Inert), wt%	0.016
Acidity, mg KOH/g	0.16
ENGLER DISTILLATION	**CUMULATIVE AMOUNT %**
IBP - 42 C°	22
To 150 C°	33
To 180 C°	41
To 200 C°	47
To 250 C°	60
To 300 C°	72

TABLE V B1b-4-(2)
TENGIZ CRUDE OIL
SPECIFICATION - 1991 ANALYSIS

DISTILLATION TEMPERATURE RANGE- °C	VOLUME %	CUMULATIVE VOLUME %
29-100	14.58	14.58
100-105	1.52	16.1
105-110	1.33	17.43
110-115	1.57	19.0
115-120	1.24	20.24
120-130	3.66	23.9
130-135	1.46	25.36
135-140	1.38	26.74
140-150	3.91	30.65
150-160	2.9	33.55
160-170	2.92	36.47
170-175	1.63	38.1
175-180	1.44	39.54
180-190	3.75	43.29
190-200	2.66	45.95
200-300	22.36	68.31
300-310	1.99	70.3
310-320	1.62	71.92
320-330	1.78	73.7
330-340	2.22	75.92
340-350	1.88	77.8
350-360	1.58	79.38
360-370	2.43	81.81
370-380	2.1	83.91
Residue from Volume Distillation of Above	14.2 Wt%	
Losses	1.89%	

5

TABLE V B1b-4-(3)
TENZIG CRUDE OIL SPECIFICATION
1991 ANALYSIS
DATA FOR THE DISTILLATION
OF THE FRACTION FROM IBP TO 170C°

DISTILLATION	TEMPERATURE
IBP, °C	42°C
10% Vol	72°C
50% Vol	114°C
90% Vol	157°C
E.P.	184°C
Acidity, mg KOH/g	0.21
H_2S, wt%	0.00061
Octane, MON	49.5
Density, 20/4 °C, gm/cm^3	0.726
Mercaptan Sulfur, wt%	0.0659
Paraffins, wt%	71.57
Napathenes, wt%	23.16
Aromatics, wt%	5.27

TABLE V B1b-4-(4)
TENGIZ CRUDE OIL SPECIFICATION
1991 ANALYSIS
FOR THE FRACTION 170 TO 370°C

DISTILLATION	TEMPERATURE C°
IBP	198
10% Vol	206
50% Vol	256
90% Vol	338
96% Vol	356
Freezing Point, °C	-14
Density, 20/4, gm/cm^3	0.826
Acidity, mg KOH/100cm^3	4.76
Sulfur, wt%	0.505
Mercaptan Sulfur, wt%	0.0566
H_2S, wt%	0.000058
Aromatics, wt%	26.49
Paraffins, wt%	63.22
Napthenes, wt%	10.29
Residue Above 370 C°, wt%	16.3
Sulfur, wt%	1.34
Coking Capacity	3.4
Ash, wt%	0.021

Approximately 1.1 percent of the 1992 feed was from a mixture of other crudes (see Table V B1a-2) which was processed for outside clients.

In the past, the Mangyshlak crude was exported, which at times meant reduced crude flow to the Atyrau refinery; this resulted in a 10 percent shortfall in operating capacity. Further, the Mangyshlak crude shares the same pipeline with a Buzachi crude, in a block flow configuration, which has caused momentary shortfalls in crude supply to the refinery. The Buzachi crude is viewed as undesirable by Atyrau because of a higher than desired metal and sulfur content.

Table V B1a-4 shows the historic crude oil sulfur content for the 1981 to 1991 time period. It can be seen that, in this time frame, the Mangyshlak sulfur content had increased over 40 percent while the sulfur content of the heavy oil product (Mazut) has increased over 20 percent. There is the observation at Atyrau that this increase in sulfur levels indicates the need for Mid-distillate Desulfurization Units (Kerosene & Diesel).

TABLE V B1a-4
INCREASING SULFUR CONTENT - WT%
IN CRUDE OIL
1981-1991

CRUDE/ YEAR	WEIGHT % SULFUR			MAZUT (HEAVY FUEL OIL)
	MANGYSHLAK	MARTYSHI	EMBENSK	
1981	0.32	N/A	0.91	0.41
1982	0.33	0.32	1.07	0.42
1983	0.28	0.32	1.35	0.39
1984	NOT AVAILABLE			
1985	0.33	0.28	N/A	0.41
1986	0.35	0.30	N/A	0.42
1987	0.36	0.36	N/A	0.45
1988	0.40	0.32	N/A	0.47
1989	0.41	0.23	N/A	0.50
1990	0.41	0.33	N/A	0.50
1991*	0.46	0.30	0.94	0.49 **
				0.63 ***

* Two Quarters of 1991
** For Mazut with sulfur up to 0.5wt%
*** For Mazut with Sulfur up to 1.0wt%

At the present time, Mangyshlak crude is not exported and the crude supply is viewed as adequate.

The Tengiz field crude is available and desired, but the price (reported to be $84 per mt compared to other crudes at $25 to $30 per mt, November 1993) is viewed as too high. The Atyrau refinery engineering staff reports that the Tengiz crude is available in a de-mercaptanized state, with RSH less than 20 ppm.

c. Impact of Crude Oil Changes

The Tengiz crude has been used at Atyrau in the past, but the refinery staff commented that its distillation characteristics were such, that the greater amount of light ends were undesirable.

Changes in crude oil characteristics and, in fact, changes in the crude oil supply are inevitable. We recommend that Atyrau utilize refinery based computer simulation services to better understand and identify equipment bottlenecks resulting from changes in crude. Further, computer simulation studies can easily be used to determine optimum crude blending mixtures to maximize effectiveness of the existing equipment.

2. DESCRIPTION OF PROCESS UNITS

a. Crude Units

As mentioned previously in this report, there are two crude distillation units in operation at the Atyrau refinery. The original, circa 1945, an atmospheric crude distillation unit and the atmospheric/vacuum unit which began operation in 1968.

The older unit was originally rated at 550 000 mta and has since been upgraded to 2 million mta. The operation consists of a set of parallel spherical desalters, a heat exchange train, a 29-tray preflash tower, 2 parallel fired heaters, a 40-tray atmospheric tower with two side-cut strippers. Both sidecut streams flow into the diesel pool. There is no stabilizer or Naphtha Rerun column in this configuration. The main distillation column is supplied with steam, however the side-cut strippers are neither heated (reboilers) or stream stripped. Operating pressure at the top of the main atmosphere tower is 1.0 to 1.2 (winter/summer)kg/cm^2. A reduction to 0.7kg/cm^2 is under consideration. The top of column reflux temperature is reported at 47°C summer and 37°C winter.

The desalter outlet runs about 100°C, with temperatures around the fired heaters running at 220°C inlet and 380°C outlet. One of the crude furnaces, P-2, was recently rebuilt and a replacement for the other, P-5, is currently under construction.

The normal operating rate is 6 500 mt per day with a maximum of 7 000 mt/day possible and a minimum of 5 000 mt/day reported. Quality of product deteriorates if crude or feed rate drops below the 5 000 mt/day minimum rate. The following Table V B2a-1 shows 1992 production rates for this unit.

TABLE V B2a-1
ATMOSPHERIC CRUDE UNIT OPERATING RATE
1992 - METRIC TONNES

FEED-DESALTED CRUDE	
Mangyshlak	1330 573
Martyshi	299 851
Kentau	3 500
Tengiz	14 780
Misc. Other Crudes	76 461
TOTAL	1 725 165

PRODUCTS	
Dry Gas	3 766
Gasoline	175 702
Diesel Type "L"	244 355
Heavy Diesel	278 258
Mazut	1 012 496
Losses	10 588
TOTAL	1 725 165

The newer crude atmospheric/vacuum distillation unit was built in 1968 with a 2 million mta capacity and has since been increased to 3 million mta. This unit began operating in 1968 and consists of a heat exchange train, a parallel, 3-stage spherical desalter, preflash column, parallel furnaces, an atmospheric column, with three side draws and side-cut strippers. The side draws are a "white spirit" product and two diesel streams. The side-cut strippers are neither heated (reboilers) nor steam stripped, although provisions exist for steam injection. The main column does have steam injected at the base. The "white spirit" stream flows to a column where the overhead cut goes to the catalytic reformer and the bottom stream is taken as a 180 to 250°C "white spirit" product. Refer to Product Specifications for additional details regarding the white spirit characteristics.

The atmospheric column bottom product (mazut) is sent to the vacuum column where cuts are obtained for the diesel pool, delayed coker feed (guydron, or vacuum column bottoms), a 500 to 520°C heavy fuel oil product and a 350 to 500°C vacuum gas oil. The vacuum column was made operational in 1979. 1992 operating data for this unit is shown in Table V B2a-2.

TABLE V B2a-2
ATMOSPHERIC CRUDE/VACUUM UNIT OPERATING DATA
1992 MT

FEED DESALTED CRUDE	
Matyshi	302 574
Mangyshlak	2 409 305
Emben	7 968
Tengiz	8 234
TOTAL	2 728 081

PRODUCTS	
Dry Gas	15 107
Gasoline	252 601
White Spirits	62 985
Diesel Total	771 862
Vacuum Unit Bottoms (Guydron)	606 752
Vacuum Gas Oil	149 297
Heavy Fuel Oil (Mazut)	847 550
Losses	21 927
TOTAL	2 728 081

172

DISTILLATION CHARACTERISTICS OF ATMOSPHERIC COLUMN BOTTOMS

DISTILLATION VOLUME "MAZUT" FROM ATMOSPHERIC COLUMN	
IBP	276°C
<300°C	1%
<350°C	9%
<360°C	10%

There have been some problems in cleaning the heat exchange train; only one major cleaning has taken place in the last 12 years. Temperature measurements are not normally taken around the heat exchanges. Effective cleaning of the heat exchangers to maintain designed outlet can yield substantial fuel oil savings. Currently there is a 30°C shortfall between design and actual fired heater inlet temperatures. At 75 percent fired heater efficiency, a savings of $16 000 per year for each degree celsius the heater inlet temperature raised. Refer to the section of this report entitled "Cost Effectiveness of Increasing Heat Transfer Surfaces" for calculation details.

Operating rates are reported at 8 500 mt/day nominal, 9 000 mt/day maximum and 6 500 mt/day minimum. They have run as low as 6 000 mt/day, but significant changes in operating procedures are required.

A new atmospheric column is planned which will have a smaller diameter top section, (the existing column has 50 percent of the top trays blocked off) with corrosion resistant metallurgy. Flash zone conditions are 375°C at 2 kg/cm^2.

There is a plan under consideration to inject sodium hydroxide for ph control into the crude stream just prior to the last exchanger before the desalter. A demulsifier is added with desalter water inlet.

Gasoline and diesel product is caustic washed for neutralization purposes. Up to 6 mt/hour of steam is injected into the atmospheric column and 25 mt/hour of steam to the vacuum column. None of the sidecut strippers utilize steam, although provision exists to do so.

Column trays are a combination of valve, "S" valve and an elongated sawtooth design (similar to old style bubble caps).

The refinery recognizes that its older pneumatic instrumentation needs to be modernized and is working with Western firms to move to DCS control of this unit.

b. Catalytic Reformer

The catalytic reformer began its operation in 1971; design was by Lengiproneftechin in St. Petersburg. Capacity is listed as 300 000 mta. Nominal feed rate is 37.5 mt/hour (50 m^3/hr) with a maximum of 56 m^3 per hour (at 40°C) and minimum at 60 to 70 percent of nominal rates. Table V B2b-1 shows the 1992 operating material balance for this unit while Table V B2b-2 provides specifications for the intermediate reformer product.

If reformer distillate end product is more than 180°C, it is recycled back to storage for rework. Additionally, if sulfur content of product is greater than 0.001 wt percent, rework is required.

TEL is added in the gasoline pool to enhance gasoline octane rating.

c. Other Units

The delayed coking and calcined coking units, which began operation in 1980 and 1989, respectively, were not reviewed from a process or operational viewpoint. The mechanical, electrical and instrument section of this report, however, does cover these units. Intermediate and final product specifications were made available and are contained in paragraph "e" of this section.

Tables V B2c-1 and 2 show the 1992 material balances for the delayed coking and calcined coke units. The gas fractionation unit is not operational and is being demolished.

TABLE V B2b-1
1992
CATALYTIC REFORMER MATERIAL BALANCE

PRODUCT	QUANTITY-MT	
Reformate	235 701	
Fuel Gas	13 060	(Stabilizer Overhead Receiver Gas)
Dry Gas (To Fuel)	12 623	(From De-Ethanizer)
To LPG	9 820	(Stabilizer Overhead Receiver Liquid)
Losses	5 818	
TOTAL	277 022	

TABLE V B2b-2
SPECIFICATION FOR
CATALYTIC REFORMER GASOLINE

ITEM	LOWER SEVERITY	HIGHER SEVERITY
Octane number, not less than		
MON	76	85
RON	---	93
Lead Concentration gm/dm^3 of gasoline, not more than	0.7	0.37
Fraction composition		
IBP, °C not lower than	35	35
10%, °C not higher than	70	70
50%, °C not higher than	115	115
90%, °C not higher than	180	180
EP, °C not higher than	195	195
Vapor Pressure (mm Hg)	500	500
Tar concentration, mg/100 cm^3 of gasoline, not more than	5.0	5.0
Sulfur, wt%, not more than	0.1	0.1
Copper Strip Test	Satisfied	Satisfied
Water Soluble Acids and Alkalis	None	None
Water and Sediment Content	None	None
Color	Yellow	Orange-Red
Density at 20°C, kg/m^3	Not Regulated	Not Regulated

TABLE V B2c-1
1992 DELAYED COKING MATERIAL BALANCE

FEED-MT		PRODUCT-MT	
(Guydron) Vacuum Column Bottoms	606 752	Gas	38 170
(Mazut)-Atm. Col. Bottoms	55 527	Gasoline Cut	82 560
		Export Fuel Oil	195 378
		Mazut (Hvy Fuel Oil to Power Station)	198 828
		Coke	98 690
		Losses	23 842
TOTAL	662 279	**TOTAL**	662 279

TABLE V B2c-2
1992 CALCINED COKING UNIT MATERIAL BALANCE

PRODUCT	QUANTITY-MT
Calcined Coke	74 306
Not Identified	8 148
Losses	13 422
TOTAL	95 876

d. Future Plans

Modernization and expansion plans at Atyrau are as follows:

a) Modernize the existing newer 3 million mta atmospheric/ vacuum crude and coking units.

b) Construct a new 3 million mta atmospheric/vacuum crude oil complex, including:

- Catalytic reforming at 1 million mta
- FCC Unit at 2 million mta
- Isomerization Unit
- MTBE Plant
- Gas Fractionation
- Propylene Concentration Unit
- Coke and Calcined Coking Units
- Hydrodesulfurizers for kerosene, diesel and vacuum gas oil for FCC feed

c) Revamp the older, existing 2 million mta crude unit into a 1.5 million mta lube oil train, including the following processes:

- Vacuum Distillation Unit
- Solvent Extraction
- Dewaxing
- Hydrofinishing
- Lube Oil Blending
- Change the existing Catalytic Reformer to a Diesel Hydrodesulfurizer

As stated previously, the refinery is ideally situated for modernization and expansion, with close proximity to crude oil and a growing industrial markets, an existing infrastructure of trained staff and services (utilities and support organizations). Further, it is the geographical focal point of major export pipelines.

e. Product Specifications

Refinery product specifications, along with actual 1993 measurements, as shown in the following tables. Products included are:

- LPG
- Gasoline, Standard A-76
- Gasoline, Premium, Al-93
- White Spirits
- Diesel Fuel
- Low Sulfur Diesel
- Heavy Diesel Oil
- Light Gas Oil (Fuel Oil for Export)
- Vacuum Gas Oil
- Heavy Fuel Oil (Mazut)
- Calcined Coke

Where available, the associated former USSR standard (GOST) for refined products is provided.

DOMESTIC LPG
STANDARD SPECIFICATION
GOST 20448-80

PROPERTY	STANDARD	ACTUAL - 1993		
		APRIL	MAY	JUNE
Sum of C_1, C_2, = C_2, wt%	Not Limited	1.78	3.83	2.30
Sum of C_3, = C_3, wt%	Not Limited	47.36	45.24	45.64
Sum of C_4, = C_4, wt%	60.0	50.29	49.27	51.89
Pentane & Heavier, wt%	1.6	1.26	5.57	0.46
Saturated Vapor Pressure 45 °C, kg/cm²	16	11	12	11
H_2S - %	0.003	0.001	0.001	0.001
H_2S + RHS, %	0.013	0.002	0.001	0.002
Water %	None	None	None	None
Alkali	None	None	None	None

GASOLINE STANDARD & SPECIFICATION
GOST 2084-77

PROPERTY	A-76 GASOLINE (SUMMER)				AI 93 (SUMMER)		
	STANDARD	1993 ACTUAL			STANDARD	1993 ACTUAL	
		APRIL	MAY	JUNE		MAY	JUNE
Octane-MON	76	76	76	76	85	87	87
Octane-Number RON	---	---	---	---	93	93	93
Lead, g/liter, Max	0.17	0.17	0.14	0.14	0.37	0.23	0.21
DISTILLATION							
IBP-°C, Min	35	43	44	44	35	43	44
10%-°C, Max	70	67	71	71	70	65	65
50%-°C, Max	115	104	115	115	115	109	109
90%-°C, Max	180	155	159	162	180	157	155
EP-°C, Max	205	182	183	187	205	181	186
Residue, %, Max	1.5	1.0	1.0	1.0	1.5	1.0	1.0
Residue & Losses, % Max	4.0	2.0	2.0	2.0	4.0	2.0	2.0
Saturated V.P. of Gas, mmHg, Max	500	450	434	440	500	407	440

GASOLINE STANDARD & SPECIFICATION (CONT.)
GOST 2084-77

PROPERTY	A-76 GASOLINE (SUMMER)				AI 93 (SUMMER)		
	STANDARD	1993 ACTUAL			STANDARD	1993 ACTUAL	
		APRIL	MAY	JUNE		MAY	JUNE
Acidity, mg KOH/100 cm^3, Max	3.0	0.9	0.3	0.2	3.0	0.26	0.15
Tar, mg/100g, Max	5.0	2.6	2.9	3.2	5.0	3.3	2.4
Sulfur, % Wt, Max	0.1	0.056	0.053	0.053	0.10	0.044	0.048
Water Soluble Acids & Alkalines Content	None						
Water Sediment Content	None						
Color	Yellow	Yellow	Yellow	Yellow	Orange-Red	Orange-Red	Orange-Red
Density 20°C, g/cm^3	Not Regulated	0.736	0.735	0.736	Not Regulated	0.746	0.743
Copper Strip	Satisfied						

STANDARD SPECIFICATION
WHITE SPIRITS FOR VARNISH PRODUCTION
GOST 3134-78

PROPERTY	STANDARD	ACTUAL - 1993		
		APRIL	MAY	JUNE
Density 20°C, g/cm³	0.790	0.770	0.770	0.770
DISTILLATION				
IBP - °C, Max	160	149	149	150
10% - °C, Max	170	155	155	157
90% - °C, Max	195	181	184	182
>200°C, % Volume, Min	98	98	98	98
Residue, % Volume	2.0	2.0	2.0	2.0
Flash Point, °C	33	35	35	35
Volatility (in Xylene Units)	2.5 to 4.5	3.0	3.0	3.0
Aromatics, wt%, Max	16	12.9	12.8	12.9
Sulfur, wt%, Max	0.04	0.026	0.026	0.032
Copper Strip	Satisfied	---	---	---

JOHN BROWN

DIESEL FUEL GOST 305-82 VS. STANDARD SPECIFICATION

PROPERTY	SUMMER GRADE L-02-40 (HIGHEST GRADE)		HEAVY DIESEL FRACTION			
	STANDARD	1993 ACTUAL	STANDARD	ACTUAL 1993		
		APRIL		APRIL	MAY	JUNE
Cetane Number	45	52	45	52	52	52
Distillation 50%, °C, Max	280	260	290	268	274	271
96%, °C, Max	360	354	---	---	---	---
Viscosity, 20°C, cs	3.0 to 6.0	4.0	3 to 6.5	4.4	4.7	4.8
Solidification Point, °C, Max	-10	-12	---	-4	-2	-2
Flash Point, °C, Min	40	54	40	54	58	57
Sulfur, wt%, Max	0.2	0.15	0.2	0.15	0.18	0.16
Mercaptans, wt%, Max	0.01	0.009	0.01	0.007	0.006	0.009
H_2S Content	None		None			
Copper Strip Test	Satisfied		Satisfied			
Water Soluble Acids & Bases	None		None			
Sediment (Inerts)	None		None			
Water Content, %	None		None			
Tar mg/100cm³, Max	25	12.0				
Acidity mg KOH/100cm³, Max	5.0	3.4	5	3.7	3.7	3.9
Iodine Nr., g/100g, Max	5.0	1.7	5	2.2	2.1	2.3
Ash, wt%	0.008	0.006	0.008	0.006	0.005	0.005
Coking Capacity of 10% Residue	0.2	0.06	0.2	0.06	0.06	0.06
Density, 20°C, g/cm³, Max	0.860	0.820	0.860	0.820	0.822	0.820

STANDARD SPECIFICATION
HEAVY FUEL OIL - M-100
(MAZUT), LOW SULFUR
GOST 10585-75

		ACTUAL - 1993		
PROPERTY	STANDARD	APRIL	MAY	JUNE
Viscosity, 80°C, cs, Max	16	4.4	5.0	4.8
Ash Content, %, Max	0.05	0.044	0.045	0.045
Inerts %, Max	1.0	0.036	0.036	0.036
Water, Wt%, Max	1.0	0.09	0.09	0.09
Sulfur, Wt%, Max	1.0	0.65	0.67	0.65
Flash Point, °C, Open Cup, Min	110	146	176	177
Solidification Point, °C, Max	42	30	36	36
Heat of Combustion Kcal/kg, Min	9 681	10 162	10 162	10 162
Density, 20°C, g/cm^3	---	0.893	0.901	0.904
Water Soluble Acids & Bases	None			

SPECIFICATION
LIGHT GAS OIL (FUEL OIL EXPORT)

Sulfur, wt%, Max	0.4
Flash Point, °C, Max	45
Solidification Point, °C, Max	-5
Iodine Number	7 to 65
Distillation	
IBP, °C	160-200
EP, °C	300-360
Density g/cm^3, 20°C	No Consistent Test Required

STANDARD SPECIFICATION
DOMESTIC FUEL OIL FOR HEATING
TU. 38 10/656-76

PROPERTY	STANDARD	ACTUAL - 1993		
		APRIL	MAY	JUNE
DISTILLATION				
10%, °C, Min	160	209	210	209
90%, °C, Max	360	327	315	303
Viscosity - 20°C, cs, Max	8.0	3.9	3.5	3.1
Solidification Point, °C, Max	-15	-11	-14	-15
Flash Point - Closed Cup °C	45	71	72	72
Sulfur, %, Max	0.5	0.34	0.39	0.39
H_2S	None			
Copper Strip Test	Satisfied			
Acids & Bases Dissolved in Water	None			
Acidity, mg KOH/100g, Max	5.0	4.8	4.6	3.1
Ash Content, %, Max	0.02	0.009	0.009	0.009
Coking Capacity 10% of Residue, Max	0.35	0.12	0.13	0.12
Water Content, %, Max	Tr	Tr	Tr	Tr
Sediment (Inert)	None			
Color	Lt Brown to Black	Brown	Brown	Brown
Lower Heat of Combustion KJ/kg	41 000	---	---	---
Density - 20°C, g/cm³	Not Regulated	0.826	0.819	0.818

STANDARD SPECIFICATION
VACUUM GAS OIL (HI-WAX CONTENT)
FOR SOLID PARAFFIN PRODUCTION
TU 38, 30124-06

PROPERTY	STANDARD	ACTUAL - 1993		
		APRIL	MAY	JUNE
DISTILLATION				
IBP - °C, Min	250	277	279	284
350°C - % Min		12	14	13
400°C - % Min	40	45	44	42
440°C - % Min	60	81	78	75
480°C - % Min	90	96	95	94
Flash Point °C, Open Cup Min	130	175	179	176
Water Content, %	None			
Sediment (Inerts)	None			
Color	Brown			
Density, 20°C, g/cm^3	0.87 - 0.89	0.881	0.882	0.881
Solidification Point °C	Not Regulated	36	36	36

STANDARD SPECIFICATION
CALCINED COKE FOR ALUMINUM INDUSTRY
FOR ALUMINUM INDUSTRY
TU-38-1011341-90

PROPERTY	STANDARD		ACTUAL - 1993		
	KP-1	KP-2	TYPE KP-2		
			APRIL	MAY	JUNE
Water Content, % wt, Max	0.5	0.5	0.11	0.12	0.59
Bulk Density, g/cm^3, Min	0.86	0.86	0.87	0.86	0.86
Ash Content, %, Max	0.6	0.6	0.38	0.50	0.43
Sulfur, % Wt, Max	1.5	1.5	1.43	1.47	1.44
Pieces 6 mm or larger %, Min	30	30	56	53	55
Density g/cm^3	2.02 - 2.06	2.06 - 2.09	2.08	2.07	2.07
Silicon - wt%, Max	0.08	0.08	0.058	0.058	0.058
Iron - wt%, Max	0.08	0.80	0.019	0.019	0.052
Vanadium, wt%, Max	0.02	0.02	0.02	0.02	0.02
Lubricating Agent Content, wt%, Max	0.5	0.5	0.33	None	None

3. Utility Services And Off Sites

a. Utility Consumption

Table V B3a-1 shows 1992 utility consumption by process unit while 1994 planned consumptions of chemicals and additives is in Table V B3a-2. Table V B3a-3 shows 1992 consumption of chemicals on a kilogram per metric tonne of fuel basis.

TABLE V B3a-1
ATYRAU UTILITY CONSUMPTION
1992

UNIT	THROUGHPUT MT	STEAM GIGACAL/YR	FUEL		COOLING WATER- THOUSAND CUBIC METERS/YR	AIR- THOUSAND CUBIC METERS/YR	ELECTRICITY THOUSAND kWH/YR
			FUEL OIL (MAZUT)MTA	FUEL GAS MTA			
Atmosphere Distillation	1 725 165	122 182	16 252	8 279	---	3 556	15 508
Atmosphere/ Vacuum	2 728 081	182 746	23 467	15 273	7 572	3 014	21 692
Catalytic Reformer	277 022	33 485	7 541	4 757	4 365	---	23 070
Delayed Coking	662 279	92 330	21 461	---	2 847	2 981	11 985
Calcined Coke	95 876	55 665	7 547	---	138	4 281	6 581
Refinery Power Station	---	440 396	33 999	20 242	---	---	15 604
TOTAL	---	926 804	110 267	48 551	14 922	13 832	94 440

TABLE V B3a-2
NAMES AND CONSUMPTION
QUANTITIES OF VARIOUS CHEMICALS
1994 PLAN

	MTA	COMMENTS
Ammonia	360	---
Caustic Soda (100%)	150.76	---
Corrosion Inhibitor (EKB-2-2)	5.78	---
Deemulsifier	160	---
Neonol	56	These chemicals are necessary to produce Deemulsifier
Ethylene Glycol	24	
Trisodium and/or Tripotassium Phosphate	8	
Carbamide (g23)	4.8	
Dichloroethane	0.615	---
Pigment:		---
For Regular Gasoline, A-76	2.74	---
For Premium Gasoline, AU-93	0.306	---
Green Anthra - B For Premium Gasoline 91/115	0.090	---
Monoehtylamine (MEA)	6.3	---
Tetraethyl Lead Solution		---
For Premium Gasoline, B95/130	36.75	---
For Premium Gasoline, AU-93	92.72	---
For Regular Gasoline, A-76	344.7	---

TABLE IV A4-b
STANDARD CONSUMPTION QUANTITIES OF VARIOUS CHEMICALS

CHEMICAL	KINDS OF FEED	KG/T FEED
Ammonia	Desalted Crude	0.06
	Mazut (Heavy Fuel Oil)	0.03
Caustic Soda	Crude Oil	0.009
	Diesel Oil	0.05
	LPG	0.12
	Gasoline	0.08
	Coking Unit Gasoline	0.08
	Domestic Fuel Oil	0.05
Corrosion Inhibitor EKB-2-2	Gasoline - Reflux	0.01
Deemulsifier	Crude Oil	0.032
Dichloroethane	Catalytic Reformer Feed	0.002
Pigments	Regular Gasoline A-76	0.006
	Premium Gasoline AU-93	0.005
Green Anthra-quino B2hA	Premium Gasoline B-91/115	0.006
Monoehtylamine	Catalytic Reformer Feed	0.02
Tetraethyl Lead Solution	Premium Gasoline AU-93	1.52
	Regular Gasoline A-76	0.75
	Premium Gasoline B-91/115	2.45
Ionol	Premium Gasoline B-91/115	0.001

b. Fuel system

Table V B3b-1 indicates components of refinery fuel gas. Each unit in the refinery that generates fuel gas is connected to the main fuel gas header. All units, except the catalytic reformer draw gas for their fired heaters directly from their own unit. Due to its high hydrogen content, the fuel gas from the reformer is sent to the header where it is mixed with gas from the other units. Reformer fuel gas needs are met by drawing gas from the fuel gas header.

Excess gas is not sent to flare, but instead goes to the refinery power station. All furnaces in the complex have combined burners, (using fuel gas and heavy fuel oil), except the delayed coker, which uses only fuel gas. Fuel mixtures are approximately 70 wt% heavy fuel oil and 30 wt% fuel gas, except for calcined coke which uses a 50/50 mixture.

TABLE V B3a-1
REFINERY FUEL GAS
VOLUME %

	Fuel Gas Used for Catalytic Reformer & Atmosphere and Vacuum Distillation	Fuel Gas Used in the Coking Unit	
H_2S	0.53	0.23%	
H_2O	0		
CO	0.85		
CO_2	1.38		
O_2			
N_2			
H_2	26.11		
C_1	14.75	12.45	
C_2			
C_2	18.14		
$C_3=$		72.44	
C_3	15.68		
$C_4=$			
C_4			
iC_4	4.90		

	Fuel Gas Used for Catalytic Reformer & Atmosphere and Vacuum Distillation	Fuel Gas Used in the Coking Unit	
nC_4	6.95		
C_5			
iC_5	5.94		
nC_5	4.77		
C_6+			
C_6			
TOTAL	100%	95.12%*	

*Data furnished by refinery does not add up to 100%.

c. **Steam System**

i. **Steam Generation, Balance and Utilization**

There are six boilers in the two power stations. One of the stations was built in 1946-1947 as part of the post World War II Lend/Lease Program. One of these boilers is presently down for relining and tube replacement. The boilers have a design rating of 30 mt/hour of 30 kg/cm2 steam for a total capacity of 180 mt/hour for the six boilers. The waste-heat boilers have a total design capacity of about 60 mt/hour but actually produce about 40mt/hour. One power station boiler is usually down. At the time of the John Brown visit in mid-November, 1993, two boilers are down as one is being relined and retubed. The additional steam demand is supplied by the district power station. It usually varies from 20 to 30 mt/hour of 12 kg/cm2 at 250°C (482°F).

a) Steam Pressure Levels

The refinery utilizes steam at the following levels:

- 38 kg/cm2 (540 psi)
- 10 kg/cm2 (142 psi)
- 1.7 kg/cm2 (25 psi)

Some of the 10 kg/cm2 steam is desuperheated to feed the 3 kg/cm2 steam system.

b) Steam Users

The turbo generator at the power station is the main refinery user of 38 kg/cm2 steam. The 10 kg/cm2 steam is used for stripping, reboilers, duplex steam reciprocating drivers, heat tracing, steam atomizing of fuel oil at burners and heavy product storage heating. The 1.7 kg/cm2 steam/condensate system is used for building heating, plant hot water and to help supply and heat the boiler feedwater.

The blowdown rate for the power station boilers is 10%.

ii. Condensate System

The plant condensate system runs throughout the refinery. Liquid from local condensate stations is pumped to a main condensate station. Fifteen to thirty per cent of the total plant condensate is fed to the waste-heat boilers. No steam traps were observed and no steam trap repair facilities were observed in the main mechanical shop. A cracked valve was the main method used for draining condensate.

iii. Impact of Potential Energy Saving Projects on Steam Balance

Since the refinery is only steam self-sufficient when all six power stations and waste-heat boilers are on line, it obviously needs more steam generation. The current upgrade debottlenecking of the boilers should make the refinery steam self-sufficient even with one boiler off line.

If the second new turbo generator for the power station, besides inletting at 36 kg/cm2 and back pressuring at 7.7 kg/cm2 also was capable of admitting/extracting at 10 km/cm2, it would help balance the 10 kg/cm2 system. If a new power station is built, consideration should be given to generating high-pressure steam and using it for the turbine inlet pressure. Then one turbine could admit/extract at 36 kg/cm2 and back pressure at 10 kg/cm2, while the other turbine admitted at 38 kg/cm2, extracted at 10 kg/cm2 and back pressured at 3 kg/cm2. This type of system would help to make the refinery electrical/power self-sufficient while minimizing condensing and maintaining a steam system that is easily balanced.

d. Electric Power Systems

i. Electricity Sources and Generation

The refinery only generates about 4 MW of its normal 18-19 MW demand. The remaining 14-15 MW is supplied by the district power station (245 MW thermal powered) via two 35 kV lines. The two 35 kV circuits are both mounted on the same steel overhead towers for the approximate five kilometer distance from the district power station to the refinery service entrance substation. The 4 MW is produced from a 47-year-old GE turbo generator (nameplating 6 MW) which is probably nearing the end of its useful life. Two other turbo generators (6 MW and 4 MW) have been dismantled. A new 6 MW Russian built turbo penetrator is presently being installed. When this is finished, plans are to install another 6 MW Russian unit. Present plans call for two additional 6 MW units to then be built in a new power station.

ii. Electric Distributing System

At the service entrance substation, the two 35 kV feeders from the city power station are brought to the substation's two 25 MVA, 35 kV/6 kV, 6 kV transformers. The two transformers feed from their dual secondary windings two split 6 kV buses, each split bus having a tie breaker. At the refinery power station's main substation, the generator is fed to one side of a split bus while the other side is fed from one of the service entrance substation's 6 kV split buses through a feeder-breaker and reactor.

From the service entrance substation, 6 kV feeders are brought from each side of the split buses to six main substations, serving the process units, the cooling water station and the air compressor house. All of these substations are of "split bus with tie breaker" architecture. The transformers that supply five small 0.4 kV substations are also fed from the service entrance substation.

The power station's 6 kV split bus feeds one station's 6 kV split bus and one 3.15 kV single ended bus. Also fed by the station bus is the water treating substation, the transformers for twelve 0.4 kV single ended-substations and two 0.4 kV double-ended substations.

Most 6 kV feeders are underground but the refinery is engaged in a program to gradually replace underground feeders with overhead lines. Most of the underground feeders are aluminum while all the new overheads are aluminum.

iii. **Electric Power Users**

Most of the refinery's electrical energy is used by the refinery's electrical motors. Other users are electric desalters, lighting, instrument air dryers, welding and electronic equipment.

The refinery has three large motors, a 3 000 kW driver for the Catalytic Reformer's Recycle gas compressor and 2 000 kW driver for the coking units' decoking water cutting pumps and its 2 000 kW spare. The refining is only allowed a 2 MW additional demand draw over their normal 15 MW draw.

Over the past five years, during each six month period, the refinery has an average of 10 outages in the power received from the district power station; with most of the outages lasting 2 to 5 minutes

e. **Refinery Utility Systems - Plant Air**

Five compressors supply plant air to the refinery, one 320 kW and four 400 kW. All are two stage reciprocating machines with a water cooler intercooler. The operating data for the compressors is 320 kW, 883 rpm, 8 kg/cm2 discharge pressure and a 50-cubic-meter per minute flow.

There are two sets of instrument air dryers, both having twin drums, filled with silica gel beads. Both have electrical drum heaters and operate on an 8-hour cycle. The actual instrument air dew point was 56°C (-68°F), specifications called for -40°C. There were large dust filters located downstream of each dryer.

4. ENVIRONMENTAL CONSIDERATIONS

a. **Fresh Water Supply**

The refinery sanitary and drinking water is provided by the city of Atyrau. The source for the city is the Ural River. The only water treatment information available at the refinery is that the city does chlorinate the water supply.

The refinery process water is taken directly and separately from the Ural River and piped to the refinery. The capacity of the intake is 17.1cubic-meters per minute (9 million cubic meters per year).

See Table V A4a-1 for the water quality of the city and process water.

TABLE V A4a-1
WATER QUALITY

		WATER		COOLING TOWER		EFFLUENT	
ITEM	UNITS	DRINKING	PROCESS	STANDARD	ACTUAL	CHEMICAL	OILY
Source	---	Ural - City	Ural River	---	---	---	---
Total Solids	mg/l		---	2 000	838	410	1 155
Volatile Solids	mg/l		---	---	---	146	390
Suspended Solids	mg/l		5.5	25	46	51	81
Dissolved Solids	mg/l	Refinery	---	---	792	359	1 074
Ca++	mg/l	Does Not	---	---	70	108	150
Ma+	mg/l		---	---	29	35	121
Fe++	mg/l	Test or	1.0	---	0.028	3.5	4.7
SO_4=	mg/l		---	500	302	169	320
Cl^-	mg/l	Have	---	300	200	68	384
Hardness Total	as $CaCO_3$	Data	576	---	640	418	884
Bicarbonate	---		---	300	2-4	---	---
Fixed	---		---	1 500	3.00	---	---
COD	mg/l		4.3	25	22.4	12.8	204
pH			---	7 - 8.5	8.0	---	---
Phenols	mg/l		Trace	---	---	Trace	3.6
Zn^{++}	mg/l		0.035	---	---	---	---
Dispersant	---		---	---	0.028	---	---
NH_4	---		---	---	---	6	2.1
H_2S.	---		---	---	---	0.03	2.4
NO_3-	---		---	---	---	2.1	3.4
Oil	---		---	---	---	0.2	57

*2nd Quarter 1993, Average.

b. Water Treatment and Distribution

The sanitary water is treated and chlorinated by the City of Atyrau. The refinery people did not know what water treatment is provided by the city. The sanitary water is distributed in an independent, separate system to the various points of use. In an emergency, this water can be used as a process water.

Process water is taken directly from the Ural river without any pretreatment. During the months of April and May, the Ural River water is extremely high in suspended and settleable solids. The high solids content causes operational problems at the cooling towers and heat exchangers.

Untreated river water is also used for fire protection. The fire loop and firewater storage tanks are a separate system. Surface ponds are also provided for the fire truck suction hose. Steam is injected into the ponds to prevent freezing.

The wastewater collection system is divided into two systems. System I for the old refinery and System II for the new refinery. The oily process and salty water are commingled in a common sewer to both plants.

The old plant wastewater passes through a 1945 vintage 3 bay Rex oil separator. The Rex unit is not equipped with mechanical oil or sludge removal mechanisms. The floating material is removed by a manually tipped pipe skimmer. The skimmed oil is pumped to a fourth Rex unit. The oil skimmed from the bay is treated in heated, aboveground steel tanks to separate the oil from the water. The oil is returned to crude storage and the water is drained to the Rex oil separator.

The discharge from the Rex unit is pumped to a ditch leading to the local area absorption/evaporation ponds. The absorption/evaporation ponds cover approximately 27 square kilometers. The ponds also receive the partially treated wastewaters from the City of Atyrau and the local industry (fish canning plant, cast concrete material plant, plastics manufacturing, steel fabrication shop and the District Power Plant). The only pretreatment by all the contributors to the pond is simple primary solids removal. District plans have been developed for a combined wastewater treatment plant (WWTP) which includes biological treatment by use of the activated sludge method.

The combined Waste Water Treatment Plant (WWTP) was not built because a method of sharing the costs of construction and operation

between the various contributors could not be resolved. The construction drawings are currently being revised in anticipation that the cost sharing details can be agreed upon.

The wastewater flow from the new refinery, System II, is treated in a separate WWTP consisting of a sand trap, oil trap, secondary settling and dissolved air floatation (DAF) unit. The oil collected in the oil traps, secondary settling and DAF is pumped to the same heated oil treatment tanks as oil from System 1. The WWTP effluent is mixed in the open ditch from the refinery to the local area absorption/evaporation ponds.

The oily sludges from any storage tanks, oil trap clean outs, secondary settling tanks and contaminated soil from spills or excavations is buried on site. There are no special liners at the sludge burial site. If any free oil is observed, the oil is pumped to the heated oil treatment tanks for processing. It was estimated that the refinery generates 1 000 to 1 200-cubic-meters per year of oily sludge. Typically, the sludge is collected and buried every two years.

c. Cooling Towers

The cooling tower water is treated with a dispersant agent. No biocides or corrosion inhibitors are added. It was reported that because of the high blow-down rate (approximately 10% of the cooling tower recycle rate) chemicals are not required for biological or corrosion control.

There are five cooling towers. All are equipped with non-reversing fans. The wood packing in all five has failed. One tower was being rebuilt and plastic media installed. There appeared to be an excessive amount of ice building up due to the short circulating of the water and inability to reverse the fans. It was reported that there is a 15°C temperature across the cooling tower in the winter and between 5-10°C during the summer. An improvement in the temperature differences is expected when the cooling towers are rebuilt.

d. Tank Farm

It was reported that there are 27 storage tanks on site and all are covered with a fixed roof. See Table V A4d-1.

The crude oils and residual product tanks are not equipped with floating roofs. The eight-light fraction tank units are interconnected to a common tank equipped with a floating roof. This does not prevent hydrocarbon losses but controls the normal daily breathing of the tanks.

The tanks are contained within nominal containment dikes or walls. The earthen dikes have eroded or been lowered to allow truck passage. Some dike walls are constructed of bricks or concrete blocks. In both cases much of the cement mortar and numerous bricks/blocks have failed. The wall or dikes could contain a slow loss of product but could not hold a major tank failure.

Numerous storage tanks had oil streaks at various levels of the welded seams and near roof vents. It was not known how often there is an overflow or seam failure and how much oil has been lost.

TABLE V A4d-1
PRODUCT STORAGE TANKS

PRODUCT	NO.	DIAMETER M	HEIGHT M	VOLUME CUBIC METERS		GALLONS	ROOF	LOSS MTA
				EACH	TOTAL			
Crude Oil	8	34	12	10 000	80 000	21 100 000	Fixed	9 600
Light Fractions	8	15	12	2 120	16 960	4 480 000	(1)	8 000
Oils	4	20	12	3 700	14 800	3 910 000	Fixed	200
Residue	7	34	12	10 900	76 300	20 140 000	Fixed	1 400
							ESTIMATED LOSS	19 200

(1) The 8-tank breather vents are interconnected with one vent to the atmosphere. Each tank has a floating internal roof.

(2) The refinery estimate did not allow for any miscellaneous losses at the flanges, valve stems, pump seals or at the wastewater treatment plant area. It is estimated that these losses would be at least 2 800 mta - giving a total estimated hydrocarbon loss of 22000 mta.

e. Quality of Local Environment

In the October 7, 1993 local newspaper, Prikasspiiakaya Kommuna, the Oblast manager of environment Yu. G. Vikoulou made the following observations:

- There are over 6 000 sources of pollutant in the district.
- Only 10% are being treated or controlled.

- Ranking of pollution sources in the city of Atyrau
- 60% from refinery
  - 10% from District Power Station
  - 12% from automobile
  - 10% Other
  - 90% of all the pollution in the Oblast is from oil refinery related activities .

End of quote.

During the refinery visit, the local weather was cold (freezing or below) and with a gentle breeze from the north. Because of these conditions, it was not possible to confirm air pollution by smelling.

During the walk-throughs, the opportunities for excessive hydrocarbon release were noted, i.e., leaky valve stems, leaking pipe seals, open oily pits, uncovered oil separators, oil covered pump sumps and oil floating on wastewater to the absorption/reed pond.

The only fact that can be extracted from the newspaper article is that the refinery is a source of both air and water pollution. The refinery must start to control its air, water and solid waste pollution.

f. Current Emission Controls

The refinery is not equipped with any air pollution control systems for the Power Plant or fired process heaters.

The refinery has an overloaded and poorly maintained wastewater treatment system.

The refinery does not have a solid waste control program. The simple burying of oily sludge is not an acceptable control.

The refinery is not monitoring the groundwater quality in and/or around the refinery.

The refinery maintains a coke dust minimization system for the coke conveyors.

g. Recommendations

During the site visit, only three actions were noted which could be preformed with little capital expenditure that would improve the environment. These actions are (1) more frequent skimming of floating oil in the oil traps, (2) optimize the operation of the air flotation unit, (3) and install an oil boom in the effluent ditch.

At both the old and new plant, the oil traps had an excessive surface accumulation of oils and wax. The accumulation is due to the infrequent skimming operation. The skimming operation is manual, therefore to improve the skimming would only require additional manhours of operators time. The additional skimming would help to reduce the excessive amount of floating oil in the effluent ditch.

The second involves the optimization of the dissolved air flotation system. Little or no floc was observed during the walk-through. The lack of floc causes a lack of oily float on the surface of the flotation clarifier. It appeared that the chemical feed rate was too low and the amount of compressed air to the dissolution tanks was insufficient. Therefore tests should be conducted in which the flocculent is added to levels between 6-10 mg/l. Consideration should also be given to adding 0.5 to 2.0 mg/l of polyelectrolyte.

The third action would be to install a floating oil boom and oil skimmers in the effluent ditch. During the walk-through, an extensive oil slick was noted in the effluent ditch. It was not determined what the specific cause was, but from the oily condition of the ditch and banks, it was evident this oil slick is a common occurrence. To capture the oil, a floating type oil boom could be installed. To increase the boom effectiveness, a small pond should be excavated to cause the water flow to slow down and give the oil time to float. Also the floating oils should have a larger area to accumulate. The accumulated oil slick must be removed frequently or the oil accumulated will exceed the oil boom depth and allow for the oil to under flow the boom and to continue to flow in the ditch.

There are numerous medium term or cost actions that we've observed. These are:

- Treat the raw process water;
- Start a Pollution Control Education program;

- Monitor each process unit to determine the amount of pollution from each unit;
- Survey for the sources of hydrocarbon losses and develop a schedule of correction;
- Cover the wastewater treatment plant;
- Install combustion controls on the Power Plant and Process Heaters;
- Upgrade the Reformer catalyst to improve the octane level thereby eliminating the need for lead.

The Ural River periodically has a very high suspended solids content. Currently the refinery uses the untreated Ural River for process water and the suspended solids create operational problems. The recommended system would be to install two circular clarifiers with continuous sludge removal and a flocculent addition. The size required would be approximately 20-meters diameter by 3-meters water depth. Again, two units are required.

If funds are not available for the construction of the clarifiers, two earth lagoons could be constructed more economically. The piping arrangements must allow either/or both lagoons to be bypassed. The lagoons could normally work one at a time. During the idle time, the lagoons could be dewatered and the silt removed to a storage pile for drying. Each lagoon should be about 30m long x 1 Om wide x 2m deep.

Many Western refineries attribute a significant pollution reduction to introducing an ongoing education program. The education program must be designed to overcome the attitude that, "pollution control is the responsibility of just certain people or departments." The program teaches the management and operation people that they all are responsible to minimize the amount of pollutants being released. The responsibility extends to the point that knowingly allowing a pollution discharge without taking corrective action is reason for suspension or loss of job for the employee. Willfully causing a release of pollutants can also result in refinery closure and/or a monetary fine. Therefore, it is recommended that an educational program be implemented that could teach refinery employees to recognize pollution releases, the damage it can cause and what individuals can do to help minimize the pollution releases. Typically a reward program works in conjunction with the education program. Rewards are given for stopping or recommending changes which can minimize future losses caused by pollution.

To make the education program works it is necessary to have a baseline pollution control survey. It is necessary to know specifically how much pollution comes from each process block and which piece of equipment or unit is causing the loss of product. With this data, everyone will know where the losses are, how much is being lost and what can be done to minimize the loss. Therefore, it is recommended an investigation and sampling program be undertaken to collect sewer flow and pollution levels for all of the process blocks. With the wastewater flow balance and pollution levels known, then the improvements in either the water flow rate or lost product can be measured. Also, an equipment replacement or revamp schedule can then be developed.

The air pollution releases can be reduced by replacing leaking valves, gaskets and seals and installing storage tank vent controls. Before starting to repair or replace valves and seals or constructing vent collection systems, it is necessary to determine an order of priority of repair or replacement. To do this the use of an organic vapor analyses (OVA) can be used to sniff all potential sources, valve stems, flanges, seals, vents. With the data collected a schedule of repair/replacement can be developed. Of course, if a bad leak is noted during the survey, it should be fixed immediately. The sniffing should be conducted every three to four months until all sources have been repaired/replaced.

Because of the large number of small hydrocarbon sources and the frequency of inspection, it is recommended a Personal Computer with a spreadsheet capability be made available to the environmental personnel. Data from the wastewater survey can also be entered into the PC for data logging and program control.

In conjunction with controlling the volatile organic losses within the process block, it will be necessary to control the losses at the wastewater treatment plant. Therefore, the sand traps, oil traps, intermediate settling and dissolved air flotation unit will need to be covered. A fan to induce a slight negative pressure under the cover must be installed to prevent any leakage around the cover. The fan can discharge to vapor recovery, a treatment system or to the flare system.

The vents at the light fraction storage tanks should be scheduled for control when the wastewater treatment plant is controlled.

The power plant and the process heaters are not equipped with combustion control systems. This allows for the potential of excess CO or NO_x due to inefficient use of fuel. To increase the efficient use of fuel and the control of CO/NO_x it is recommended that low NO_x burners be installed with automatic O_2 analysis and combustion air control.

The octane content level for the gasoline pool is too low. To raise the level to A-76 or AU-93, excessive amounts of tetraethyl lead is added. Thereafter, for air pollution control reasons, it is recommended that the existing reformer system be upgraded or replaced to allow for a high-octane unleaded-gasoline pool.

h. Summary of Environmental Survey

Currently the refinery is running at 4.5 million mta (nominal capacity 5 million mta) and is processing 0.45 percent sulfur crude oil. The refinery is not equipped to recover any sulfur. The general sulfur balance at 4.5 million mta is estimated to be:

Sulfur in Crude	20 250.0 mta
Sulfur from Process Heater Stacks	300.0 mta
Sulfur from Power Plant Stacks	700.0 mta
Sulfur in Water Effluent	4.2 mta
Sulfur in Product	19 245.8 mta

A more detailed Sulfur Balance based on 1992 operating data is shown in Table V A4b-1.

TABLE V A4b-1
ATYRAU
SULFUR BALANCE - 1992

CRUDE OIL	MTA	WT % SULFUR	MTA SULFUR
INLET			
Mangyshlak	3 739 878	0.45	16 829
Martishy	602 425	0.26	1 566
Other Misc. Feeds	90 742	0.45 (Est.)	408
TOTAL	4 433 045		18 803
OUTLET			
Gasoline	488 922	0.001	5
Diesel	1 286 743	0.14	1 801
Domestic Fuel Oil	156 695	0.40	627
White Spirits	63 434	0.011	7
Export Fuel	24 811	0.40	99
Heavy Fuel Oil	1 991 192	0.74	14 778
Coke	77 444	1.5	1 162
Vacuum Gas Oil	150 842	0.41	618
Semi-Products	(32 839)	0.45 (Est.)	(148)
LPG	13 060	---	---
Internal Fuel Gas	85 707	0.50	428
Heavy Fuel Oil	81 258	0.6	488
Losses	45 775	0.45 (Est.)	206
TOTAL	4 433 045		18 803

It was stated that refinery could not process the newly extracted oil from the Tengiz Oil Field because of the higher (0.63 wt%) sulfur content. The existing refinery would require desulfurizers and a Claus Unit.

i. The storage tank breather vents and product loading storage area are not equipped with hydrocarbon recovery systems. The control valves, flanges at metering devices, pump seals and the wastewater collection and treatment plant are not covered. All of these points allow hydrocarbons to be lost to the atmosphere. It is estimated that approximately 22 000 mta of hydrocarbons are lost.

   NOTE: The Power Plant boilers and the process fired heaters do not have any combustion controls installed. Both units fire fuels containing sulfur burning fuels. Neither type of unit has any stack gas controls.

ii. The chemical content of the process water is moderately high in dissolved salts. The suspended solids content is variable with April and May having the highest value. The process water should be treated for suspended solids before use.

   The water quality of the treated wastewater is less than acceptable. It is reported that the effluent contained an average of 57 mg/l of oil in the treated oils effluent. During the plant walk-through at the effluent ditch to the absorption/evaporation ponds, the flow looked like the flow to the forbay of a Western API separator that was receiving a flow from an upset condition. From the visual inspection, it is estimated that the oil content during the walk-through was more than 500 mg/l - which is excessive.

iii. The solid wastes from tank bottoms are currently being buried on site. The burial sites do not have special groundwater protection liners. The coagulated wax on the surface of the oil traps is also buried. Groundwater testing has not been done in order to determine the magnitude of ground pollution and location.

iv. The lack of sufficient funding for preventative maintenance impacts upon the environmental control in two adverse ways. The first is at the process block. The lack of preventative maintenance allows an excessive amount of product to be lost to the wastewater sewer. The second is the lack of preventative maintenance at the overload wastewater treatment plant which prevents the equipment from preforming near design capabilities. In order to meet Western standards of operation, most of the

existing process equipment must be upgraded or replaced along with the replacement of the oil sludge handing equipment.

i. **Handling of Materials**

i. The straight run crude and reformed gasoline pool is relatively low in octane value. Therefore, the refinery is adding tetraethyl lead (TEL) to obtain A-76 or AU-93 ratings.

NOMINAL OCTANE RATING	LEAD ADDED
A-76	150 mg/L as Pb.
AU-93	300 mg/L as Pb.

The TEL arrives in a specially designed tank on a flatbed rail car. The shipments are from England & the Netherlands. The "Greens" have closed the Russian TEL plant which was used to supply TEL.

The TEL tank car is unloaded into horizontal steel tanks located under a sun roof. Unloading is by compressed air. Nitrogen is used to blanket the tanks.

The TEL and gasoline coloring is added to a gasoline recycle line located adjacent to the TEL storage tanks. The gasoline recycle pumps are located at the tank farm area.

Even though the national policy is to eliminate TEL addition, there are currently no plans to eliminate the use of TEL at this refinery. See however, the future plans section of this report (Section V A)

ii. Currently the control of aromatics is of little concern to the refinery. If a new refinery is built, the control of aromatics will become part of the design.

iii. It was reported that solvents are not used at the refinery.

iv. The chloride ion used for activation of the reformer catalysts is dichloroethylene. The chlorinated hydrocarbon is received in drums. The material is pumped with a hand drum pump to an elevated blend tank. The drum storage and the overhead blend tank areas are not installed with spill and containment protection.

v. The heavy metals content of the crude products and by-products is not monitored.

vi. Sulfur is not removed from the crude oil. The estimated amount of sulfur in the product is 20 000 mta. (At 4.5 million mta crude throughput.)

vii. Sulfuric or Hydrofluoric acids are not used at the refinery. The "old" refinery did have an alkylation unit, but they experienced an explosion and fire after 40 plus years of operation. The unit was not rebuilt.

viii. The on-site power plants and the process furnaces use a mixture of residual oil and wet refinery fuel gas. There are no combustion controls on any of the units. During the walk-through it was noted that the two power plant stacks were spewing black smoke. Two of the three boilers were firing, the third was being revamped. The District Power Plant had requested that the refinery raise more of their own steam. With only two boilers operating, the refinery started over firing to raise the extra steam. This over firing caused the black smoke. It was reported that under normal operating conditions, there is a little black smoke. New boiler/burners are scheduled to be installed as money becomes available.

Periodically the local Sanitary District contracts to have the ambient air sampled and analyzed for hydrocarbons, H_2S, NH_3, SO_2, NO_x CO benzene and phenol. See Table V A4i-1, Ambient Air Quality.

TABLE V A4i-1
AMBIENT AIR QUALITY

	REFINERY (mg/m³)			RESIDENTIAL (mg/m³)		
POLLUTANT	ALLOWABLE	MAX	*AVG*	ALLOWABLE	MAX	AVG
Hydrocarbons	90	12	*5.5*	5	5.0	38
H_2S	3	0.02	*0.0027*	0.008	0.006	0.001
NH_3	6	0	*0*	0.2	0	0
SO_2	3	1.7	*0.26*	0.5	0.47	0.13
NO_x	1.5	0.02	*0.004*	0.085	0.02	0.004
CO	6	2.0	*0.77*	3	3.0	1.4
Phenol	0.01	ND	*ND*	---	NT	NT
Benzene	4.5	0.015	*0.005*	---	NT	NT

Data: 3 Qtr. 1993
ND: Not Detected
NT: Not Tested

ix. The refinery does not produce any asphalt; residual is coked. The coking system has a calcining rotary kiln. The raw coke is confined on a concrete slab with the cutting water flowing to a wastewater treatment sewer. The coke cutting water is not cleaned and recycled. Originally, the cutting water was part of the cooling tower system. Abrasion of the cooling tower recycling pumps and the coke buildup in the cooling tower basins caused the refinery to route the cutting water to the oily water sewer. The coke dust is causing problems at the wastewater treatment plant, but not as severe as at the cooling tower.

The raw coke is belt conveyed to either the calcining kiln or to overhead hoppers for railcar loading. The calcined coke is belt conveyed to the overhead hoppers. The belt conveyors are enclosed to prevent fugitive emissions.

The refinery does not have any continuous monitoring systems of air or water emissions. The Sanitary District periodically samples the ambient air and the refinery lab samples and analyses the water effluent to the absorption evaporation ponds.

5. The Opportunities For Improvement

The overall goals of this work are to assist in the privatization of the petroleum sector by providing salient information for preliminary investment decisions, and to enhance privatization opportunities by recommending improvements for the existing installations that will increase technical and financial performance.

The work undertaken to meet the goals are part of the U.S. AID NIS Petroleum Refinery Program for Kazakhstan. The purpose of the program is to:

- Identify changes in operating practices and low-cost modifications to equipment that can be immediately implemented to increase the efficiency of energy utilization, conserve energy by avoiding unjustified energy use, and reduce undesirable gaseous, liquid, and solid effluents.

- Identify and characterize more extensive changes in operating and maintenance practices, equipment, and physical modifications to the process units.

The results of the field work are presented in a one-volume report. This volume of the report details the results of the evaluation and audit study of three refineries in Kazakhstan at Atyrau, Pavlodar and Shymkent.

a. Operation Improvement Opportunities

The recommendations of this study to improve energy utilization and operations (yields, practices, etc.) are categorized in terms of immediate, medium-term, and long-term opportunities.

i. Immediate Opportunities

These opportunities require changes in operating conditions with or without nominal equipment modifications, those which appear implementable within the staff resources of a refinery, and at a cost of less than the equivalent of approximately U.S. $100,000. This category covers zero to low cost modifications to the refinery that will be relatively easy to implement. The refinery should be able to execute these modifications with its own internal resources.

ii. Medium-Term Opportunities

These opportunities require formal justification, infusion of capital from external sources, and possibly the services of externally obtained experienced resources for implementation.

iii. Long-Term Opportunities

These opportunities involve abandonment of major processing units, major modernization (or revamping) of existing units, or the construction of new processing units. The justification would occur through market analyses, rather than technical analyses, of crude supply and product slates.

b. Energy Improvement Opportunities

The major energy improvement opportunities were summarized by the Evaluation Team and fall into four major areas: energy conservation, furnace combustion, heat conservation, and steam system improvements.

i. **Energy Conservation Improvement Opportunities**

Implementation of comprehensive energy conservation policies and programs. Economic evaluation of energy conservation programs should be based on world energy prices.

ii. **Furnace Combustion Improvement Opportunities**

Improvement of furnace combustion efficiencies by:

- Addition of monitoring equipment, e.g. flue gas oxygen analyzers, fuel flow meters, and associated controls.
- Use of improved waste heat recovery techniques such as additional steam generation, convection section process reboiling, and combustion air preheat.
- Recovery of low level heat in boiler feedwater and combustion air preheat.
- Replacement of equipment where necessary, e.g. burners and instrumentation.
- Operator training in efficient furnace firing techniques.

iii. **Heat Conservation Improvement Opportunities**

Improvement in heat conservation practices focused on the selected upgrade of insulation (repair, replacement, and addition) as warranted.

iv. **Steam System Improvement Opportunities**

Improvement opportunities in the area of steam system operating efficiencies included:

- Adding steam traps.
- Collecting and reprocessing condensate.
- Considering additional utilization of steam (e.g. steam turbine drivers with admittance/extraction nozzles and steam reboilers).

c. Emissions Control Opportunities

While a few of the environmental improvements can be implemented quickly, a considerable amount of capital must be invested for the majority of the needed work. The balance of capital investment versus environmental goals and improvements must be considered in the future.

In summary, the potential emission control opportunities include:

- Develop a comprehensive environmental program that stresses:
  - emissions awareness and responsibility.
  - monitoring of specific emissions from the refinery, both air and water.
  - termination of existing emissions to the environment.
  - aggressive cleanup of past pollution.
- Enhance product desulfurization and refinery sulfur recovery capabilities.
- Improve water treatment operations by:
  - diligent monitoring of water emissions.
  - determined repair and maintenance of existing pollution and control equipment.
  - remediation of lagoons and ponds that have accumulated past pollutants.

The recommendations of opportunities to improve environmental conditions are categorized into immediate, medium-term, and long-term opportunities.

i. Immediate Opportunities

The immediate emission control opportunities require changes in operating practices with or without nominal equipment replacement, those which appear manifestly in the public interest, and those which appear implementable within the staff resources of the refinery for the equivalent of approximately U.S. $100 000.

ii. **Medium-Term Opportunities**

The medium-term emission control opportunities require infusion of capital from external sources, possibly the services of externally-obtained experienced personnel for implementation.

iii. **Long-Term Opportunities**

The long-term emission control opportunities are high cost and represent substantial clean-up of accumulated pollution from past neglect.

d. **Operation And Energy Efficiency Improvements**

Prior to implementation of any refining improvements (either energy efficiency or equipment replacement/revamp), a comprehensive strategic investigation and evaluation of the Atyrau Refinery long term operating plans should be conducted. Based on the results of the evaluation, some or all of the following recommendations could be implemented.

The energy efficiency improvement opportunities described is this section are not given in any special order. However, these opportunities are organized in terms of Immediate-, Medium- and Long-Term Opportunities. Cost shown are on a U.S. Golf Coast basis. Many of the potential improvements require the refinery to develop a history of specific causes of unscheduled downtime, and resultant loss of product and profit as a basis for justifying the suggested project.

i. **Immediate Opportunities**

Below is a listing of the Immediate, Minimum Cost Opportunities for energy efficiency or operational improvements. For purposes of classification, Minimum Cost Opportunities will be defined to include expenditures below $ 100 000.00 U.S. Dollars.

a) The Atyrau refinery must develop and implement comprehensive energy conservation philosophies and policies. A formal program should be established and monitored. We suggest that the refinery raises its consciousness level and sensitivity to the energy costs involved in processing crude oil.

b) Appoint a refinery energy and material control team for evaluating the potential energy savings on each unit.

c) Investigate the use of and install mechanical gas seals on centrifugal compressors.

d) Initiate a detailed program that regularly monitors, calculates, and evaluates product yields and utility consumptions. The program must be designed and operated such that regular energy conserving and/or product quality adjustments are sanctioned and encouraged.

e) Launch an extensive equipment insulation program to repair and replace existing insulation in poor condition, supplement existing insulation in good condition (as necessary), and add insulation to currently exposed equipment items based on economics related to world energy prices and heat losses of equipment.

f) Invest in education programs or courses for the following topics:

- Overall fired heater operations, with specific focus on proper air/fuel ratios, burner operations, and maintenance.
- Steam trap selection and maintenance.
- Major process equipment inspection and recertification.
- Overall refinery energy efficiency improvement programs.
- Engineering design and operations course.

g) Audit the steam generation, distribution, utilization, and condensate return equipment and balances in detail. Develop a comprehensive plan to upgrade the steam system(s).

- Add, repair and replace insulation as necessary based on world energy prices and heat losses from various sources.
- Design and implement new steam trap selection and maintenance programs.
- Consider utilization of steam turbine drivers, particularly for critical services. Since the refinery may operate at reduced throughputs in the foreseeable future, steam turbine drivers may afford some operating flexibility along with improved utility efficiencies at turndown conditions.

- Consider replacing steam tracing piping with stainless steel tubing. Ensure proper installation and insulation of steam traced lines.

- Consider the use of steam turbines with admittance/ extraction nozzles at the low or medium steam system pressure to minimize condensing and regulate and balance the steam system.

h) Conduct regular heat exchanger evaluation audits. Cleaning schedules and anti-foulant injection procedures should be based on audit results.

i) Develop process optimization strategies and procedures based on economic and safe operations. Specifically; reduce Catalytic Reforming Unit operating pressure to improve yields.

j) Conduct "Test Runs" of individual process units to determine baseline process operations and yields. Accumulation of Test Run data would require:

- Calibration of Instruments (and replacement, if necessary)

- Complete feedstock and product analyses.

- Complete temperature and pressure surveys.

- Specific material balance development with the goal to quantify "losses".

k) Provide, evaluate, and replace as necessary utility monitoring instrumentation and confirm its accuracy. Process unit utility consumptions per mt of product should be calculated with yearly goals set to reduce utilities, so far as practicable.

l) Evaluate new and improved catalysts for the Catalytic Reforming Unit that may provide yield and energy efficiency advantages. It is highly probable that the old catalysts can be traded for the new catalyst and in addition a hard currency payment will be made to the refinery, due to the higher platinum content of the old catalyst.

m) Develop a detailed maintenance history and data logging program.

n) Installation of a mechanical integrity program for the refinery, such as identifying on a computer system every piece of rotating equipment, (make, model number, type of, seal, motor horsepower, etc.).

o) Other recommendations are as follows:

- Investigate the use of structured packing as appropriate in capacity limited towers.
- Install steam traps on all steam users.
- Install permanent vibration and temperature monitors and shutdown devices on the refinery's critical compressors and air blowers.
- Investigate and install canned or magnetic drive pumps in dangerous chemical or acid service.
- Consider using a computer program for analysis and design of heat exchangers such as HTRI for designing new and rerating existing heat exchangers and look at pinch analysis of crude heat exchange train.
- Perform monthly flue gas analysis on each furnace and adjust burners accordingly.
- Install oxygen analyzers on furnaces in the major refinery units. Preferably, install automatic fuel controls on all fired heaters in conjunction with "in-situ" Oxygen/flue gas analyzers.
- Purchase portable hand-held infrared digital thermometers for maintenance group for checking bearing housing temperature and insulation heat loss.
- Purchase a computer aligning machine to achieve more accurate machine alignment, hence, lowering rotating equipment failure rate.
- Investigate the installation of remote control of air dampers on furnaces.

I. Immediate Opportunities

DESCRIPTION	COST	BENEFIT
Develop and implement a comprehensive energy conservation program. This could include: • Formation of an energy audit team. • Purchase of publications (magazines, books, periodicals) related to specific energy conservation practices. • Attendance at AIChE, API, NPRA seminars related to energy efficiencies. • Precise monitoring of all utility consumptions for each process unit. • Calculation of energy consumed per unit of feed or product, and comparison to Western standards. • Authority to make changes to improve overall refinery energy efficiency. • Hold the unit manager responsible for energy consumption. By: Atyrau Refinery	Insignificant if all the energy is now metered on the process units. Otherwise, the cost of installing those meters.	Significantly lower refinery energy costs. Provides a baseline for further yearly improvements. Major U.S. refiners have reduced their energy usage per barrel of crude run by over one third during the past 17 years. They are now averaging about a 1 percent reduction per year.

DESCRIPTION	COST	BENEFIT
Develop and implement a program to frequently monitor product yields and qualities along with utilities consumptions. Adjustments to process operating conditions would be recommended to optimize product values vs. feed and utility costs. This type of program could minimize lower value and maximize higher value product manufacture, and optimize product qualities (e.g., eliminate octane "giveaway"). By: Atyrau Refinery	Minimum Variable	Immediate improvement in profitability.

I. Immediate Opportunities

DESCRIPTION	COST	BENEFIT
Attend education/training seminars related to fired heater operations and optimization with specific focus on optimum air to fuel ratios, and burner operations & maintenance. The training representative should conduct the seminar at the jobsite if at all possible. Result will be immediate improvement in fired heater operations and energy consumption. Supplier: John Zink or equivalent, or furnace combustion specialist or consultant.	To be Determined	Immediate energy savings in the fired heater sections of the plant.

DESCRIPTION	COST	BENEFIT
Attendance at steam trap selection and maintenance education/training seminar with special emphasis on reduced steam consumption. Result will be lower overall steam consumption. Supplier: Spirax Sarco, Inc. 2806 Center Circle Dr. Downers Grove, Illinois 60515 or Armstrong International 1081 East Ocean Blvd. Stuart, FL 34996	$5 000 Western firms may be willing to do this no charge.	Immediate steam consumption reductions resulting in lower overall energy expenditures.

I. Immediate Opportunities

DESCRIPTION	COST	BENEFIT
Attendance at a refinery equipment inspection, evaluation, and recertification training seminar. Result will be ability to enact an approved preventative maintenance program to improve turnaround maintenance efficiency, equipment failure rates, and overall safety aspects of the complex.	To be Determined	Improved process unit on stream time.

DESCRIPTION	COST	BENEFIT
Attendance at AICHE, API or NPRA seminars regarding refinery operations energy efficiency. Results will be better understanding of modern refinery energy efficiency improvement practices. Supplier: AICHE, API, NPRA or European Equivalent.	$3 000 (Estimate) per person	Improved refinery energy expenditures per mt of crude processed.

170

I. Immediate Opportunities

DESCRIPTION	COST	BENEFIT
Attendance at petroleum engineering design and operating course. Results will be improved understanding of modern basic engineering design practices that can stimulate future process unit revamp options. Supplier: UOP or Equivalent	$3 000 (Estimated Course Cost) per person	Undetermined

DESCRIPTION	COST	BENEFIT
Purchase one thickness gauging system (e.g. sonogram, audiogram). Allows maintenance crews to accurately determine process equipment metal thickness to efficiently monitor equipment corrosion, schedule turnaround maintenance and preclude equipment failures. Vendor: Krautkramer Branson P.O. Box 350 Lewistow, PA 17044	$3 000	Undetermined

I. Immediate Opportunities

DESCRIPTION	COST	BENEFIT
Conduct "Test Runs" of individual process units to determine baseline process operations and yields. Accumulation of Test Run data would require: 1. Calibration of instruments. 2. Complete feedstock and product analyses. 3. Complete temperature and pressure surveys. 4. Specific material balance development with the goal to quantify "losses". By: Atyrau Refinery	Variable	Provides an operations baseline for future process unit evaluations.

DESCRIPTION	COST	BENEFIT
Provide, evaluate, and/or replace the utility consumption monitoring instrumentation and confirm its accuracy. Evaluate overall Atyrau refinery balances and utility system capabilities. Allows refinery staff to: 1. Qualitatively determine the capacity, reliability and future capability of the utilities systems. Results will determine if future utility adjustments (e.g. replacement of electric motors with steam turbine drives) could be justified. 2. Determine energy consumptions per unit of feed charged or product produced. Results will allow operating staff to adjust process conditions to improve overall energy efficiencies. By: Atyrau Refinery	Variable	Provides concrete utility consumption numbers for each process unit. This will allow accurate evaluation of the efficiency of each process.

I. Immediate Opportunities

DESCRIPTION	COST	BENEFIT
Purchase portable hand-held thermometer for maintenance group for checking bearing housing temperature. Note: Select one (1) unit and utilize thermometer for furnace and bearing housing monitoring.	Budget Cost: $2 000	Improved on-stream time due to prevention of unscheduled maintenance.

DESCRIPTION	BUDGET COST	BENEFIT
Perform monthly flue gas analysis on each furnace and adjust burner controls to minimize excess air. Attention to flue damper operation and burner air registers is also suggested.	Equipment has been supplied by John Brown through this U.S. AID program.	Immediate, in addition to environmental improvement. It is believed that a 10 to 15 percent improvement in fired heater efficiency is easily achievable. In 1992, Atyrau reported fuel usage of 158 818 metric tonnes. At $70/mt and 10 percent efficiency improvement, this equates to a savings of $1.1 million a year.

DESCRIPTION	COST	BENEFIT
Consider using Western firms when it is necessary to replace heat exchangers, as they use computer programs for analysis and design of heat exchangers such as HTRI for designing new and rerating existing heat exchangers. The resultant new designs are more efficient and cost effective.	Minimal	At design operating rates for the crude units an increase in crude heat exchanger efficiency is worth $14 400 per year per degree centigrade. That is, getting 10°C more out of the heat exchange train will save $144 000/yr in fuel loss. It should be noted that part of the short-fall is due to fouling and the need for improved cleaning regimen, however, improved heat exchangers and system analysis is a necessary part of the energy improvement process.

DESCRIPTION	COST	BENEFIT
Conduct regular heat exchanger operating audits. Exchanger cleaning schedules and anti-foulant injection procedures should be based on audit results. By: Atyrau Refinery	Minimal/Variable	Energy savings due to improved heat exchanger operation.

I. Immediate Opportunities

DESCRIPTION	COST	BENEFIT
Evaluate refinery hydraulic loops to determine if excessive pressure drops are taken across fluid flow system control valves. Trim pump impellers to meet actual system requirements.	Minimal	Reduced electrical energy consumption.

DESCRIPTION	COST	BENEFIT
Purchase a computer aligning machine to achieve more accurate machine alignment; hence lower failure rate.	Budget price for one computer = $5 000	Improved on-stream time and, thus, improved plant profitability due to prevention of unscheduled downtime.

I. IMMEDIATE OPPORTUNITIES

DESCRIPTION	COST	BENEFIT
Purchase and install a computer with proper software for the maintenance group for monitoring, controlling, scheduling and tracking the refinery maintenance management system.	Budget price for computer and software = $20 000	Improved on-stream time as a result of decreased amount of unscheduled downtime.

DESCRIPTION	COST	BENEFIT
The refinery is experiencing frequent rotating equipment seal failures. It is suggested that installation of a double mechanical seal in a cartridge mount with more exotic metallurgy, such as in Monel or Hastelloy, bellows with Kalrez or Graffoil o-rings. This seal will be able to withstand temperatures in excess of 800°C. Select a unit multi-stage charge pump.	1 set of seals - $30 000	Average cost to repair pump for M-seal failure - $10 000 estimating three failures per year cost = 10 000 x 3 = 30 000/yr. Savings = $30 000/year Payout = $30 000 ÷ 30 000 = 1 yr. Reduced VOC emissions will also be a benefit of this change.

DESCRIPTION	COST	BENEFIT
Install "in situ" oxygen analyzers on furnaces on major the refinery units.	$14 000 each	Refer to "Flue Gas" analysis recommendation. This project contributes significantly to the overall fuel savings.

I. Immediate Opportunities

DESCRIPTION	COST	BENEFIT
Develop an extensive equipment insulation program to repair and replace existing insulation in poor condition, supplement existing insulation in good condition as necessary, and add insulation to currently exposed equipment items based on world energy prices and heat losses of equipment. Improve insulation practices, for example, insulate bare pumps, valves, piping, and jacket with aluminum or galvanized sheet metal where process temperature exceeds 65°C.	Approximately 250 parts at 1.0 m^2 each. Installed cost at $210/$m^2$ = $52 500	At average process temperature = 150°C, heat loss with a 3m/sec wind, approximately 3 200 Kcal/m^2 = 800 000 Kcal/hr Approximate value: $800\,000 \frac{Kcal}{hr} x \frac{Kg}{9\,800\ Kcal} x \frac{tonne}{1\,000\ kg} x \frac{7\,920\ hr}{yr} = 646.5 \frac{tonnes}{yr}$ $\frac{646.5\ tonnes}{yr} x \frac{\$70}{tonnes} x \frac{1}{0.80\ EFF} = \frac{\$56\,571}{yr}$ Payout: $\frac{\$52\,500}{56\,571} = 0.93\ years$

I. Immediate Opportunities

DESCRIPTION	COST	BENEFIT
Install permanent vibration and temperature monitors and shutdown devices on refinery's critical compressors.	Budget cost: $2 000/point. Estimate 8 pts/compressor. Cost = $2 000 x 8 = $16 000	Based on refinery experience, it is reasonable to assume 2 failures/yr. Cost of failure = $10 000. Total cost $10 000 x 2 = $20 000. Payback = Less than 1 yr.

DESCRIPTION	COST	BENEFIT
Investigate steam and condensate recovery system operations and options. Current lack of steam traps and condensate recovery systems result in inefficient utilization of the steam source. Audit the steam generation, distribution, utilization, and condensate return equipment and balances in detail. Develop a comprehensive plan to upgrade the steam system(s). 1. Add, repair, or replace insulation as required. 2. Implement complete steam trap selection and maintenance program. 3. Consider utilization of steam turbine drivers, particularly for critical services. This type of driver can provide improved utility efficiencies at turndown operations. 4. Replace steam tracing piping with stainless steel or copper tubing. Ensure proper installation and insulation of steam traced lines. For example, install steam traps on steam condensate lines in the refinery's tank farms.	1 trap = $200 Installed = $400 Total cost = $400 x 100 = $40 000	Savings of $1 000 to $3 000 per year per application are possible, if steam is now allowed to blow through unchecked in heating unit. Potential Payback, per trap $\frac{\$400}{\$1\ 000/yr} = 4.8$ *months*

I. Immediate Opportunities

DESCRIPTION	COST	BENEFIT
Investigate and install a canned or magnetic drive pump in LPG dangerous chemical or acid service.	Budget Cost: $15 000	Personnel safety and environmental benefits through reduced VOC emissions.

DESCRIPTION	COST	BENEFIT
Action: Provide a review of and training in capital budgeting practices. Benefit: Allocations of capital funds in a business must be based on maximizing financial return. A portion of available funds are needed for maintenance, environmental and safety purposes. However, discretionary capital should be allocated on a sound technical/economic basis. Refinery management needs the tools and understanding to recognize and support projects that minimize costs (in many cases energy savings) and thus maximize profits. Yield improvements, labor reduction, new products, new business lines, etc., also fall into this category. Supplier: To be determined. Business schools or individuals from project justification/financial analysis areas are possible sources. Groups specializing in management training, such as the AMA, are another source.	$25 000 Estimated Follow-up $15 000	Improved return on invested capital and proper association of limited funds.

JOHN BROWN

I. Immediate Opportunities

DESCRIPTION	COST	BENEFIT
Repair broken and damaged cooling tower sheathing to allow better cooling tower efficiency.	Budget price per tower - $5 000	A tower cooling water supply temperature can be translated to reduced water flow and lower pumping costs.

DESCRIPTION	COST	BENEFIT
Investigate and install a lube oil analysis maintenance program to reduce equipment failure.	By refinery staff.	A full analysis of lubrication requirements and implementation of resulting insights will aid in reducing equipment failure and resulting loss of product due to unscheduled downtime.

DESCRIPTION	COST	BENEFIT
Action: Consider installation of variable frequency drives in selected applications.	Varies with application	Reduce energy consumption, improve product quality, and product quantity.

ii. Medium-Term Opportunities

Below is a listing of medium term, intermediate capital cost opportunities (approximately $100 000 to $5 000 000) for energy efficiency or operational improvements:

a) Improve fired heater overall operations and efficiencies.

- Add advanced process control of combustion air & fuels.
- Replace or repair of burners as necessary.
- Replace heaters with steam reboilers where feasible.
- Consider incorporation of a Hot Oil System if replacement of fired heaters (e.g. reboilers) and/or exchangers becomes necessary.

b) Invest in computer software as follows:

i) Simulation program(s) for Crude / Vacuum Distillation, Reforming, and Distillate Hydrotreating and FCC Unit operations.

ii) LP Model for profit analysis based on alternate feedstocks and the resulting product slate.

c) Commission some or all of the following studies intended to improve the energy efficiency, operability, and/or product yields of the refinery:

- Installation of Advanced Control Instrumentation, particularly for combustion control.
- Modification / revamp of existing Catalytic Reforming Unit equipment (reactors, fired heater tubes, piping, etc.) for suitability to higher temperature (> 1 000 °F) operations for increased gasoline octane capabilities.
- Improve Vacuum Fractionation potential by modification of the current column configurations and/or internals.

d) Upgrade Steam Generation Systems

- Upgrade condensate recovery systems such that condensate is recovered and returned to the steam system.

- Consider Steam Turbine Drivers to improve efficiency of turndown operations. Investigate the economics of adding a turbine nozzle for steam admittance/extraction to minimize condensing and help to balance the steam system.

- Consider steam heated reboiler exchangers to replace fired heaters, where feasible.

- Investigate the installation of a flame guard system on burners.

- Study the addition of a vacuum pump to replace the steam vacuum jets in the normal operation of the vacuum unit.

- Investigate the installation of condensate collection drums at the condensate collection stations. Allowing low-pressure steam to flash off and used in storage tanks heating.

- Repair broken and damaged cooling tower sheathing to allow better cooling tower efficiency.

II. Medium-Term Opportunities

DESCRIPTION	COST	BENEFIT
Commission a comprehensive study to investigate how best to improve overall fuel fired efficiencies considering: a) Addition/utilization of Advanced Process Control of combustion air and fuel(s). b) Replacement or repair of burners as necessary. c) Replace fired heaters with steam reboilers, where feasible. d) Consider incorporation of a Hot Oil System if replacement of fired heaters (e.g. reboilers) and/or exchangers becomes necessary.	To be Determined	Immediate energy savings expected. The fired heaters are the most energy intensive equipment items in the refinery. They also appear to have the most potential for improved energy efficiency.

II. Medium-Term Opportunities

DESCRIPTION	COST	BENEFIT
Invest in computer software as follows: a) Simulation program(s) for Fractionation, Crude and Vacuum Distillation, Catalytic Reforming, and Distillate Hydrotreating. b) LP model for profit analysis based on variable feedstocks and resultant product slates. Allows systematic approach to operations and yields predictions. Simulation Program Suppliers: Hyprotech - "Hysim" Sim-Sci - "Process", "PRO/II", "ASPEN/SP" Chem Share - "Design II" AspenTech - "ASPEN PLUS" *or equivalent*	$20 000 to $250 000 Depending on program selected and training required.	Improved refinery operation and their profitability.

II. Medium-Term Opportunities

DESCRIPTION	COST	BENEFIT
Commission a study to evaluate best implementation of advanced control instrumentation for optimized process operations. Results in improved energy efficiencies, product quantity and/or product quality that are generally paid-off in less than one year. See future work section of this report for additional estimate details regarding DCS/advance controls.	$250 000 (Est.)	To be determined

DESCRIPTION	COST	BENEFIT
Commission a study to evaluate revamping of the existing Catalytic Reforming Unit to higher temperature/lower pressure operations for increased octane and yield benefits.	$250 000 (Est.)	Improved yields and product qualities of a high value product. Is needed to improve overall refinery profitability.

II. MEDIUM-TERM OPPORTUNITIES

DESCRIPTION	COST	BENEFIT
Upgrade the steam generation, distribution, and condensate recovery systems to improve utility efficiency. • Upgrade condensate recovery systems such that condensate is recovered and returned to the steam system. • Consider Steam Turbine Drivers to improve efficiency of turndown operations. Investigate use of admittance/extraction nozzle. • Consider steam heated reboiler exchangers to replace fired heaters, where feasible.	To Be Determined	Reduced steam consumptions resulting in improved refinery utility efficiency.

DESCRIPTION	COST	BENEFIT
Study the addition of a vacuum pump to replace the steam vacuum jet in the normal operation of the vacuum tower.	10kw Material = $20 000 Installed = $30 000	Ability to obtain tower vacuum and more efficient operation of the vacuum system. Current low energy costs may not, at this time, justify the copier expenditure require.

186

II. Medium-Term Opportunities

DESCRIPTION	COST	BENEFIT
Investigate the installation of a flame guard system on furnace burners.	Material - $1 000 for 28 burners = 28 x 1 000 = $28 000 Installed = $56 000	Combination of safety (prevent fire or explosion) and savings in excessive fuel usage should a burner fail.

DESCRIPTION	COST	BENEFIT
Action: Consider installation of two-speed/reversing motors/controllers on all cooling towers	$160 000	Reduced energy consumption, and maintenance (due to reduced icing). An economic justification of this recommendation should be undertaken, considering reduced energy consumption and maintenance costs.

iii. Long-Term Opportunities

Below is a listing of long-term, significant capital investment (greater than $5 000 000) opportunities for greater energy efficiency or operational improvements. Implementation of these projects should be considered following a detailed evaluation of long range plan of the Atyrau refinery operations.

a) Consider increased usage of indigenous or imported Natural Gas as a primary refinery fuel. Decisions should be based upon internal production of refinery gases, internal production of Fuel Oil, pricing of Natural Gas and Fuel Oil, export demand for Fuel Oil, and environmental regulations both, present and future. Gas pipelines do pass through and near to Atyrau.

b) Proceed with plans to modernize and add process units to the Atyrau refinery. Potential process additions should be appraised with the realization that the refinery will process heavier, higher sulfur content crude oils in the future.

c) The refinery must acknowledge strict adherence to Kazakhstan state and world standard product specifications will be required in the future. Improved production quality standards may become necessary. Consideration should be given to:

- Merox treating of LPG, Gasoline, and Jet Fuel products.
- Higher octane requirements of the gasoline pool.
- Future reduction or removal of lead from the gasoline pool.
- Lower sulfur requirements of heavy fractions.
- Fuel Oil desulfurization.
- Additional elemental Sulfur Recovery.

d) Incorporate Advanced Process Control or Distributed Control Systems into the refinery. This will require replacement of the majority of the refinery instruments. If decided, consolidation of Control Rooms should be considered.

e) We support the refinery's efforts in installing a new steam-driven generation equipment as it will provide more non-interruptible power and reduce the cost of electricity.

f) Investigate and install a lube oil analysis program to reduce equipment failure.

g) Engage in change out of single mechanical seals to double mechanical seals to reduce emission levels.

III. Long-Term Opportunities

DESCRIPTION	COST	BENEFIT
Proceed with plans to modernize and add process units to the Atyrau refinery. Consider the following units for bottom of the barrel processing. • FCC Unit • RCC unit (similar to FCC technology - for processing of atmospheric reduced crude). • Hydrocracking Unit. • Visbreaking Unit. Potential process additions should be appraised with the realization that the refinery will process heavier, higher sulfur content crude oils in the future. By: Atyrau Refinery	If the refinery feels that additional studies are necessary to secure financing, a budget cost of $350 000 to $500 000 is suggested.	Improved heavy oil processing will result in improved overall refinery profitability.

III. Long-Term Opportunities

DESCRIPTION	COST	BENEFIT
The refinery must acknowledge that future strict adherence to Kazakhstan state and world standard product specifications will be required. Improved production quality standards may become necessary. Consideration should be given to: • Merox treating of LPG, Gasoline, and Jet Fuel products. • Higher octane requirements of the gasoline pool. • Future reduction or removal of lead from the gasoline pool. • Lower sulfur requirements of heavy products which could require: a. Fuel Oil desulfurization b. Additional elemental sulfur recovery By: Atyrau Refinery	To be determined	Indeterminate at this time, but see narrative discussion on these topics.

e. Environmental Emissions Reductions

i. Immediate Opportunities

There were no observed situations in which field changes could be made during the site visit which would reduce the refinery environmental emissions. There are, however, some low-cost activities that can be undertaken.

I. Immediate Opportunities

DESCRIPTION	COST	BENEFIT
The following environmental activities could be undertaken with little capital expenditure.		Improved environmental conditions through reduction of oil outflow in waste water.
1. More frequent skimming of floating oil in the traps.	Additional man-hours of existing staff.	
2. Optimize operation of the Air Floatation Unit. Add more flocculent and increase amount of compressed air fed to the unit. Consider adding 0.5 to 2mg/l of polyelectrolyte.	Cost of chemicals and power from Air Compressor.	
3. Install Floating Oil Boom and Oil Skimmers in the effluent ditch. Excavate a small pond to increase residence time. Remove oil frequency.	$5 000 to $10 000	

I. IMMEDIATE OPPORTUNITIES

DESCRIPTION	COST	BENEFIT
The following environmental activities have been identified but not evaluated with respect to implementation cost. They are, however, believed to fall into the immediate (less than $100 000) cost range.	Undetermined.	
a) [illegible] treatment of incoming process water.		Reduce fouling of Cooling Water Heat Transfer Surfaces.
b) Cover the Waste Water Treatment Plan and Install a Vapor Recovery System.		Reduction of VOC emission.
c) Upgrade the Waste Water Treatment Plant to eliminate system overloading.		Improvement in quality of waste water discharge.
d) Evaluate coke cutting water fines removal.		Improvement in Waste Water Treatment System.

I. Immediate Opportunities

DESCRIPTION	COST	BENEFIT
a. Supply the plant with stack gas analyzers which will allow them to optimize combustion to minimize the release of NO_x and CO.	$15 000	• Reduction of air emissions.
b. Provide an ambient air organic vapor analyzer so surveys of pumps, flanges, valves and vents can be conducted. With these data, a program of volatile organic emission reduction could be developed.	$10 000	• Generate an employee awareness of pollution control activity.
c. Provide a potable construction-type mud pump to allow the removal of the collected oil at the oil traps. This pump could also be temporarily used to remove settled solid in the oil traps.	Material: (Wood) $ 1 000 Labor $25 000 Repair chains: $ 6 000 Total $32 000	• Quick temporary solution for oil and sludge removal until oil traps are repaired.

DESCRIPTION	COST	BENEFIT
Investigate the environmental benefit of converting existing burners to lower NO_x type.	Estimate cost low NOx burners at $1 000/burner.	Immediate, environmental benefits.

ii. Medium-Term Opportunities

II. Medium-Term Environmental

DESCRIPTION	COST	BENEFIT
The refinery has a significant problem of the loss of an excessive amount of oil from the process units. A two-step program of waste reduction is required. One is to initiate an education program for the operators to make them more aware as to the actual loss of oil. The first is to determine the source of waste water and pollutants from each process block. The second is to determine the process efficiency of each unit at the WWTP. The data from the two studies will highlight the magnitude of loss and allow for prioritizing the corrective action.	$100 000 for an outside service; alternately, refinery staff could be used to perform the work.	• Identify specific sources of waste and waste water. • Obtain the data for corrective action decision making. • Create an awareness of the source and amount of product loss.

II. Medium-Term Environmental

DESCRIPTION	COST	BENEFIT
Install a storage tank vent collection system on the 8 tanks storing volatile products. Install three vapor condensing systems on the vent system above.	5 000 x 8 tanks = $40 000 2 at $15 000 = $30 000 Total = $70 000	• Recover about 8 000 mt of product per year. $160/mt of diesel is appropriate local price of product in early 1993. At $160/mt, this is a $1.28 million or a 3-week payback.

DESCRIPTION	COST	BENEFIT
The contamination of the ground water is unknown. Need to identify the location and amount of underground pollution.	200 wells at $400 each = $80 000 Soil Analysis 400 at $100 each = $40 000 20 Monitoring Wells at $600 each - $12 000 Drill Mobilization 1 at $2 000 = $2 000 Report Preparation - 1 at $7 000 = $7 000 Total = $141 000	• Identify the location and amount of ground water pollution. • Data to be used to determine oil clean-up program

iii. Long-Term Environmental Opportunities

If the National environmental direction of Kazakhstan becomes similar to that currently found in the West, it is suggested that the refinery participate in an area study with the other major emission sources as part of an overall effort. An estimate cost to conduct such an overall study through installation of a meteorological station ambient air monitoring stations, based on Western experience, is as follows:

III. Long-Term Environmental

DESCRIPTION	COST	BENEFIT
Remediation of past oil waste site burial. Clean-up of old disposal site.	Cost dependent upon results of ground water contamination study and extend (quantity) of contaminated soil.	Improved environmental quality.

DESCRIPTION	COST	BENEFIT
Improve ambient air quality through reduction of sulfur in fuels; use of desulfurization technology.	Dependent upon changing crude oil sulfur content and new environmental regulations.	Improved quality.

iv. **Further Work Required**

GASOLINE OCTANE/LEAD REDUCTION

The need for unleaded, higher octane gasolines will be driven by demand resulting from an increase in the number of newer motor vehicles coupled with changes in environmental regulation. Given the current and projected economic structure in the country, the local population, in the near future, may be able to create a significant demand in this area. Improvements/modernization in Catalytic Reformer Operations can help Atyrau move to reduce TEL addition in gasoline. The use of oxygenates (MTBE, TAME, etc) may be necessary. The refinery should initiate a study on how to best accomplish this.

v. **Further Environmental Work Required**

The recommendation for further environmental work transcend the refinery. A state effort must be put forth to develop a viable body of laws, rules, regulations, inspection, and state-wide inspection/enforcement procedures. This effort must involve the local District political and industrial representation plus interface with adjacent Districts or countries, as well. This effort will be required over a period of 5- 10 years. The cost cannot be estimated at this time.

6. SUPPORTING PLANT DATA

a. Thermal Energy

i. Heat Transfer Equipment

a) Fired Heaters

<u>Atmospheric Desulfurizing (AD) Unit</u>

On the AD unit one of the two down draft side-fired heaters has been replaced by a new bottom fired heater. The replacement for the other down draft side-fired heater is now under construction. A new steel stack with supporting structure has been built. The two operating heaters (new and old) both duct into it. The foundation and flue ducting for one new air preheater have been installed. Those for the second new air

preheater, flue ducting and foundations are now being worked on. The combination burners were firing about 90% refinery gas and 1 0°/0 mazut.

Atmospheric/Vacuum Desulfurizing (AVD) Unit

The flue gas from both the atmosphere and vacuum heaters is used to supply heat to two small waste heat boilers. Both heaters are the conventional Russian designed downdraft side-fired units. A third heater parallelling the atmosphere heater was installed during a previous bottlenecking revamp.

Coker

The coking unit has four side-fired updraft heaters; N-1, N-2, N-3 and N-4. N-1 and N-4 are identical heaters, as are N-2 and N-3 each being part of semi-parallel trains. The heater flue gas is collected in a common duct installed above the heaters and supplies the heating media to two waste heat boilers. N-2 and N-3 are built on a common structure. The burners fire only refinery fuel gas.

Reformer

The reactor heater has three horizontal rows of side burners and is down drafted with the flue gas going through an underground duct to the air preheater. The burners are furnished with heated ducted air from the preheater. The heater sits in a structure that supports both the furnace and reactors leading to short transfer lines.

The reboiler heaters are each bottom fired by two gas burners. Combustion air is provided by the air preheater.

b) Heat Exchange

Most heat exchangers are of the shell and tube variety. Product cool down is achieved by first cooling through shell and tube exchangers, by heat exchanging with other process streams, then further cooling with forced air cooling exchangers and then trim cooling with cooling water in shell and tube exchangers. On the coker, some of the final cooling was done in condenser boxes.

Exchanger insulation is generally mineral wool covered with aluminum or galvanized sheet metal. On the exchangers, the bonnets, flanges, and channel section were generally not insulated.

c) Waste Heat Recovery

Six energy recovery systems were seen in the refinery:

- Air preheater on the catalytic reformer furnaces
- Two 3 mt/hour (actual) 10 kg/cm2 waste-heat boilers, one on N-1 furnace and one on N-2 furnace at the AVD
- Two 7 mt/hr (design) 12 kg/cm2 waste heat boilers on the coker calcining unit.
- One 40 mt/hr (design) 12 kg/cm2 waste-head boiler in the coker calcinin# unit.

Actual total steam made from the waste heat boilers is about 40 mt/hr#.

The foundations and flue ducting have been installed for a new air preheater on the AVD and for a second air preheater.

d) Cost Efficiency of Increasing Heat Transfer Surfaces

When the refinery has reasonable figures for its present and future projected energy costs, it should strongly consider doing "pinch" analyses on the heat exchangers for it's major process units. Other factors in considering whether a pinch analysis needs to be done are: has the refinery unit been modified since the original design and is the crude being processed the original design crude.

e) Cost Effectiveness of Increasing Heat Transfer Surfaces

<u>Economic Analyses</u>

<u>Crude Heat Exchanger Train</u>

The economic driving force to improve heat transfer within the crude heat exchange train is as follows:

Basis: Design Unit Feed Rate	**354 tonnes/hour**
Enthalpy of Crude	0.6 kcal/kg- °C
Fuel Oil Heating Value (minimum)	9 800 kcal/kg
Heater Efficiency	90%
Fuel Cost World Price Basis	$70/mt

$$354 \frac{mt}{hr.} \times \frac{24hr}{day} \times \frac{0.6\ kcal}{Kg - °C} \times \frac{1\ 000\ kg}{mt} = \frac{5.1 \times 10^6\ kcal}{°C - day}$$

At 90 percent furnace efficiency and an operating time of $\frac{330\ days}{yr}$

$$\frac{5.1 \times 10^6\ kcal}{°C - day} \times \frac{kg}{9\ 800\ kcal} \times \frac{\$70}{1\ 000\ kg} \times \frac{1}{0.90} \times \frac{330\ days}{yr} = \frac{\$13\ 357}{yr - °C}$$

Achievement of these savings may be possible through improved heat exchange design, minimization of fouling and optimization of the heat exchange train system.

i.e. The operating cost reduction, due to a decrease in the amount of fuel fired, is $13 357/yr. per °C rise in crude temperature as a result of improved heat recovery in the crude heat exchange train. At 75% heater efficiency, the savings becomes $16 029/yr. for each °C the heater inlet temperature is raised.

The refinery reported that the inlet to the newer crude unit heater was 30°C below design. If a 30°C improvement in the heat exchange train can be achieved, fuel savings of $480 850 per year would result. (At 75% heater efficiency.)

f) Tracing and Temperature - Maintenance Systems

Stream tracing for freeze protection and temperature maintenance is minimal. No electrical tracing was observed. Instrument cabinets had steam coils but many were not insulated. Steam tracing utilized welded tubing, some tubing fittings were observed. The feed tanks at the coker are partially insulated and steam heated. The mazut tanks at the power station are similarly treated.

ii. Heat Rejection Systems

a) Cooling Water

No chilled water systems are used in the plant process. Cooling water is provided by cooling towers. Five tower units are on site and their conditions range from not-in-service to not very good. The inside wood is rotting. The tower that is out of service is being stripped of its rotting wood slats. It will be filled with plastic spiral packing. The other four towers will similarly be treated as funds become available.

The cooling tower pump station is in good repair. On 17 November 1993, the temperature across the tower was 1 5°C. For further cooling water information see the environmental consideration section.

The main uses for cooling water in the refinery are:

- For final trim cooling of product and rundown streams in shell and tube exchangers;
- For final product cooling at the coker in condenser boxes;
- Inter and after coolers on the plant air compressors;
- Intercoolers on the reformer H2 compressors;
- Lube/seal oil cooler on the reformer recycle compressor.

b) Air Cooling System

The air coolers noted were in two general sizes. Both the smaller and larger size units are of updraft design and configured as vane axial/units with shaped inlet bells. The smaller size has an 8-bladed manually fixed foil fan about 2.5-meters in diameter and is powered by a direct drive 30 kW motor. The larger size had an 8-bladed manually fixed foil fan about 4-meters in diameter and is powered by a direct drive 55 kW motor.

The smaller unit has 6 finned tube flat sections about a meter wide and 5-meters long arranged in three horizontally paralleled inverted vees. The larger unit has finned tube flat section, each

about 7-meters long, arranged in four horizontally paralleled inverted vees. For additional cooling, the units are paralleled in varying configurations.

c) Equipment Piping and Steam Heat Losses

Compared to most Western refineries, Atyrau's heat losses to the atmosphere are high. There are three main reasons for this.

The first is that in the past with the very low price of crude oil, there was very little economic incentive for waste heat recovery, such as spending extra funds to put tubes in the convection section of a furnace to make and/or superheat steam .

The second reason is that more insulating needs to be done and that a higher quality insulation needs to be used. The only solid high temperature insulation seen in the CIS was on the GE turbogenerator and that was installed as part of the Lend/Lease program in 1946-1947. Mineral wool is generally used as high temperature insulation and is very inadequate. The organic binder gets burnt off and the insulation then deteriorates. Also, mineral wool is soft and provides poor backing for the sheet metal covering.

The third reason is the lack of combustion controls resulting in high excess air which, in turn, leads to larger quantities of heated air losses to the atmosphere.

Numerous examples were observed where insulation had been removed to make repairs and then never replaced. As the cost of energy keeps escalating, the refinery will, hopefully, give this type of energy savings the priority that is needed to do the job, as it recognizes the high price it is paying for its neglect. Other similar items were uninsulated valves, flanges, flue ducting to air preheaters and waste-heat boilers and air ducting from air preheaters.

The only centrifugal compressor in the refinery is the recycle gas compressor at the catalytic reformer. The 3 000 kW recycle gas compressor is rated for 243-1670 m3/min and boosts the gas stream from 20 kg/cm3 (284 psi) inlet pressure to 36 kg/cm2 (511 psi) discharge pressure. The compressor was built in the DDR (East Germany) during 1968.

Mounted next to the recycle gas compressor are two hydrogen compressors. The second machine is a spare for the first. The 500 kW two-stage reciprocating machines are each rated at 49.5 kg/cm2 discharge pressure with a capacity of 447 m3/min. In another building there is a 200 kW 489 rpm reciprocating compressor that supplies the catalyst regeneration air.

All the air compressors are five 2-stage reciprocating machine compressing air to 8 kg/cm2. Four of the machines are 600 rpm 400 kW machines with a capacity of 63 m3/min. The fifth machines is a 833-rpm 320 kW compressor with a capacity of 50 m3/hr.

Compressor station housekeeping is good. Units are installed with adequate space for servicing and routine maintenance. Overheard crane/hoists are installed for major repairs, equipment is painted and foundations are adequate. Compressor identification tagging is done on only a few units.

There are two forced draft fans on the reformer air preheater. Also, there is one forced draft fan on each of the two heaters on the AVD. There will be two additional forced draft fans when the two air preheaters on the AD are finished. Induced draft fans are installed on each of the six power station boilers, the two cokerwaste heat boilers and the coker calciner rotary kiln waste heat boiler.

iii. Pumps

Pump stations were generally well maintained regarding housekeeping. The pumps are installed with adequate space for servicing and routine maintenance. Foundations are poured concrete and the pumps are elevated. Equipment was generally painted, coupling guards are in place and painted with safety colors. Units are not identified with equipment numbers or tags as is common practice in the West. One annoying habit is the painters' tendency to paint over manufacturer's nameplates.

Piping practices are poor and would be unacceptable by Western standards. Pump inlet and outlet flanges are used as pipe supports and as anchor points. Some piping is run along at grade to pumps, exchangers, etc. forming tripping hazards. Pump casing and impeller condition is unknown. The unit's mechanic engineer

maintains passbook type repair logs of the unit's equipment. The average pump age in the refinery is over 30 years.

Most of the refinery pumps are centrifugal pumps with single mechanical seals. Some pumps on the coker have double seals. Duplex steam pumps are used on the crude units, coker and loading station. They are used a lot as emergency spares for heavy product such as mazut, especially during start-up and on the coker. Some belt-driven (electrical motor) three-stage reciprocating pumps and gear pumps were observed at the coker.

iv. Electric Motors

Except for the Catalytic Reformer whose motors were mostly DDR built and the power station and water treatment plants which contained U.S. built Lend Lease motors, the motors in the refinery were USSR built. Outdoors and on the process unit the motors were TEFC-XP (totally enclosed, fan cooled-explosion proof) induction motors. The largest motor is the 3 000 kW recycle compressor driver on the catalytic reformer. The other very large motors are the heavy duty 2 000 kW 186 kg/cm2 coker cutting water pump and its spare. There are about 40 other 6 kV motors varying in size from 200 kW to 630 kW. In addition, in the power station there are twelve 3.12 kV motors varying from 147 kW to 222 kW.

At the air compressor house there are five synchronous motors, four 400 kW and one 320 kW. With the relatively low refinery power factor of 0.7, consideration should be given to buying 108 synchronous motors for all future and replacement compressor drives.

With the refinery's present electrical costs, the use of high efficiency motors at the refinery would be too cost prohibitive at this time. They would also have to be purchased with hard currency and have only a nominal efficiency advantage over USSR built motors.

Atyrau should investigate, especially as their electrical costs escalate, the use of two speed motors for cooling tower fan drivers. This feature would not only save power in the winter season and during the other cold weather, but would make the cooling tower operations more manageable in very cold weather by decreasing tower icing. By also installing reversing motor

starters, an iced up tower could be melted by reversing, for a short period, the fan rotation.

v. **Steam Turbines**

The only steam turbine operating in the refinery at the present time is the 6 MW electrical generator's driver. This turbine was U.S. built by General Electric and furnished as part of the post World War II Lend/Lease program. A sister turbine and generator have been dismantled and removed from the refinery. However, a new Russian built turbine is in the power station awaiting the 6 MW generator it will drive.

vi. **Special Equipment**

The coke from the coker is calcinated in an approximately 100-meter-long rotary kiln at 1400°C (225°F). The flue gas from the kiln is fed into a 40 mt/hr waste heat boiler generating 10 kg/cm2 steam. The kiln's yearly output is 140 000 mta.

Another item of special mechanical equipment in the Atyrau refinery is the hydraulic decoking system used to remove coke from the coking drums. The hydraulic decoking system consists of the following:

- Decoking water pumps.
- Boring tool. Hydraulically cuts a pilot hole (approx. 1-meter diameter) through the filled coke drum.
- Cutting tool. Hydraulically cuts the coke from the drum.
- Drilling assembly - air motor, power swivel, rotary drilling hose, crosshead guide and hoist assembly.

The only other special mechanical equipment noted was the 3-stage steam ejector pulling the vacuum on the AVD vacuum column .

b. **Energy Loss Monitoring**

There is essentially no energy loss monitoring being done in the Atyrau refinery. Missing and needed are the following:

i. Combustion controls on boilers and heater. No "in-situ" oxygen analyzers have been installed in the refinery to monitor excess air; this is the first step in combustion control.

ii. Temperature surveys to monitor heat exchanger and compressor after and inner cooler efficiencies to determine exchanger and cooler cleaning schedules and heater stack temperatures to monitor excess air and other possible heater problems.

iii. Perform "Pinch Analyses" to determine if more heat transfer could economically be made by the use of more exchangers and/or changing the heat transfer configurations.

iv. Modulating controllers on boiler and heater fan dampers.

c. Refinery Maintenance Practices

i. Policies

There are approximately 2 200 persons in the Atyrau refinery. The mechanical group comprises 134 people plus another 80 people in the electrical group. There are 114 people in the electrical group (operations and maintenance) of which 70 people are in the electrical shops. The instrumentation group comprises 78 people which includes 2 instrument engineers, 8 supervisors, 5 computer engineers and a 5-person analyzer group.

Mechanical

The refinery has problems getting stainless steel and high alloy piping such as a furnace and boiler tubes. Also, spare parts from Russia and the CIS are hard to come by. Parts for the coker unit have been especially difficult to obtain along with pump impellers and seals. The coke cooler on the coking unit is down because spare parts are not available.

The mechanical engineer assigned to each unit keeps the passport (history log) for each item of the unit's mechanical equipment, including relief valves. The mechanical engineer also makes-up the 110 mechanical equipment TAR (turn around) work list. A special team does the relief valve testing and repair. There are small mechanical, instrument and electrical shops at each unit.

There are also compressor and pump repair teams. Twenty-eight persons plus supervisors comprise these teams. To fill positions on these teams, prospective candidates are interviewed and their workbook (experience record, all workers have one) is examined. Those selected are given a two month trial. No new people have been added to the teams during the past 18 months. Small, daily, low capital repairs generally are done in the field. Large, non--routine, capital intensive work is generally done in the main shops (mechanical. instrumental and electrical).

Welders are retested every year on all the procedures that they are qualified for. The welding on code vessels, whether for repair or manufacture, is 100% radiographed. Vessels operating with partial hydrogen pressures and high temperatures are guaranteed for 20 years. After 20 years service, to continue use of the vessel requires that a special test be done on it each year by the Lenniftetchim Institute of St. Petersburg. The Institute has three options: recertify the vessel for operation at the existing pressure and temperature rating, recertify the vessel for operation at a lower pressure and/or temperature, or decertify the vessel. The Catalytic Reformer vessels are due to be retested in February of 1994.

The new mechanical main shop was occupied in 1990. The shop has three main areas; an office building, shop building and outside storage area. The shop building is divided into three main areas, an 80-meter by 20-meter well equipped machine shop and a 40meter by 20-meter pump/compressor shop and a 40-meter by 20meter weld shop. All three shops have overhead bridge cranes. The outside 80-meter by 20-meter storage area is also serviced by an overhead bridge crane.

Interviews are held when obtaining instrument, electrical and mechanical craft apprentices. Preference is usually given to vocational school graduates. Apprenticeships last a minimum of three years and maximum of five. There is ongoing training and yearly testing for advancement. The remark was made that the refinery was now getting a higher level of apprentice candidates than previously. It was thought that this was due to the higher wages that had been authorized at the refinery and a higher rate of unemployment in the community.

General Impressions

Except for the very widely spaced process units, walking through the Atyrau refinery was like walking through a 90 000 barrel/day U.S. refinery in the early 1970s. This impression probably results from the reality that except for the coker along with its calcining unit, the process units fit this time frame. The coker (built in 1980) resembled cokers built in the U.S. during the late 1960s or early 1970s.

While U.S. refineries have been forced to continually upgrade and modernize their process units and equipment by their competitors, high energy prices, EPA, OSHA and market economics; Atyrau appears to have been maintained and debottlenecked in kind. It was able to serve its market and meet its quotas without having a competitive marketplace forcing it to do better.

There did seem to be a consistent and/or overall guiding philosophy in the maintenance effort. Considering the age of the equipment and the operating environment, the maintenance and housekeeping at the process units, power station and auxiliary facilities was good to very good. Looking at some of the 1946 Lend/Lease equipment that was still being used, one wondered if it had been repaired beyond it's economic life. Considering the local equipment and labor costs, this probably was not the case.

The maintenance force while small, has done a commendable job of maintaining equipment with limited equipment and tools, and a scarcity of spare parts. In fact, an inordinate amount of maintenance man-hours are spent fabricating spare parts due to their unavailability.

Atyrau, like the other CIS refineries visited, is spread out. The process units appear to be at least 200-meters apart to reduce possible fire and explosion damage and makes TAR work easier. It does, however, increase piping lengths and increase pumping costs and heat losses. This spread-out effect was also evident on the process units. Inquiry about this elicited the response that "this was done on the advice of the Russian military to reduce possible bombing damage."

The use of foam nozzles for fire fighting was very much in evidence in the refinery. Besides elevated foam nozzle monitors, air coolers had foam nozzles installed that could rapidly flood the coolers with foam. The area under bottom fired furnaces is similarly protected as

were pump shelters. The fire fighting brigade, part of the Kazakhstan Army, were very professional, and had good equipment which is kept in first class condition.

iii. Process Unit Review

a) AVD - Atmospheric/Vacuum Distillation Unit

The AVD was built in 1968 of Azgipaneftechim, Baku license with a capacity of 3 mta / 60 000 Bbl/day. There are two tower groupings; the preflash towers, atmospheric tower and its strippers and the vacuum tower and its strippers. A staircase extends to the top of the atmospheric tower and another to the top of the vacuum column. All the strippers were full length columns. Platforms were about 3-meters apart and there were manways at each platform for almost all the columns. All the columns, except for two vacuum column strippers, had insulation covered with sheet metal for skirt fire protection. The two vacuum strippers had their skirts brickfaced for fireproofing. The units' piping supports were concrete fireproofed.

The atmospheric and vacuum furnaces are both downdraft design. The burners are duel fuel type with steam atomization on the fuel oil side. At the time of this visit, the burners were firing 90% refinery gas and 10% mazut (heavy fuel oil). The flue gas from each furnace was fed underground to a small 3 mt/hr, 10 kg/cm2) waste heat boiler.

It was evident that the refinery's insulation practice had been based on the cheap energy. Insulation thickness and usage was less than normal U.S. practices. Fiberglass and mineral wool covered with sheet metal or aluminized fiberglass sheeting were used throughout the unit. The exception was small piping that had been wrapped with asbestos tape. When lines are insulated, valves and flanges generally are not. Most pumps are not insulated, a major exception being the steam chests on duplex steam pumps.

Most exchangers are of the shell and tube variety. Air coolers are mostly in four unit arrays with eight, 1-meter by 7-meter fin tube exchanger sections per unit. The tube and shell exchangers were mounted singly in long banks, no stacked exchangers were seen. The tendency is to parallel many small

exchangers (four to six) rather than use larger units. Exchanger channels and bonnets were not insulated.

The motors on the unit were all TEFC XP Russian manufactured motors. There were four 6 kV powered motors; two 400 kW, a 320 kW and a 315 kW. Most motors are fed by underground cable. These are gradually being replaced by overhead cable mounted in new overhead cable racks. Unit lighting is by incandescent lamps mounted in explosion-proof fixtures; lighting levels are considerably below Western standards.

The AVD pump house is configured of prestressed concrete columns and beams with a corrugated transit roof. All of the 6-meter-high sides are left open except for the top one meter which is enclosed with transit panels. The pumps are centrifugal except for some duplex steam pumps used to pump heavy products. Throughout the unit, the piping practice is to use equipment to support piping and valves. Equipment is also used as pipe anchors. This conflicts with Western practice which isolates the equipment from piping reactions. Seal lubrication fluid is supplied by a manifold system. Spacing between the pumps was adequate for operator and maintenance access. However, piping is a different matter with lines often strung into place between equipment or run along the ground creating tripping hazardous with headers and valves installed in awkward locations. None of the valves noted were painted or tagged.

The control room was very large by U.S. standards and had a 5-meter high ceiling. The control board was non-graphic and "U" shaped with the base of the "U" 12-meters long and sides 4-meters long. The control room lighting was fluorescent and the lumens were well below U.S. standards. The control instrumentation is the standard Russian 15 cm by 17.5 cm frontal footprint pneumatic two-pen recorder with control on one pen. The plug-in controllers were PID for temperature service and PI for the others. EMF to pressure converters were used to provide a pneumatic analogue signal to the temperature controllers. The multipoint temperature recorders were potentiometric and resembled the old Honeywell "Browns." Mounted in the control board were digital LEL (lower explosive limit) alarms. There were six units with five alarms points per unit. The units had digital readouts with audible and visual alarms. The units were installed this year replacing old Russian

LEL alarms which had become unreliable and high maintenance items. Instrument mounting details resembled a U.S. Crude unit built in late 1950s and not upgraded. No close coupling of DPs or use of manifold valves and/or heat-packs were noted.

Four electric desalters are used. Operator protection from the high voltage equipment installed on top of the desalter is by use of a high fence surrounding the equipment and an interlocked gate.

b) Catalytic Reforming Unit

The Catalytic Reforming unit is a Soviet design with mostly East German (DDR) equipment and is rated at 300 000 mta (6 000 Bbl/day). The reformer's reactors and furnaces are built on a common structure leading to short piping runs between the furnaces and reactors. The furnace has four tiers of burner, downdrafting into an underground duct to the air preheater.

The air preheater section consists of two forced draft (F.D.) fans, a heat exchange section using the reformer furnace flue gas on the hot side, two induced draft fans and a 70-meter high welded steel exhaust stack. Operating positions are controlled by manual dampers on the fan suction and discharge. Dampers on the preheater provide additional control. Thermocouples (TCs) are installed in the duct section to provide temperature readings. In addition to the five reformer furnace sections, the F.D. fans also provide combustion air to the two reboiler furnaces .

Unit lighting uses incandescent lamps mounted in explosion proof lamps. Lighting levels were well below present U.S. standards. The motors were mostly DDR built, TEFC XP induction type. There are five 6-kV motors: one 3 000 kW machine driving the recycle gas centrifugal compressor, two 500 kW hydrogen reciprocating compressors, one 200 kW motor driving the regeneration air reciprocating compressor and a 315 kW motor driving the reactor charge pump. The switchgear for these machines is metal clad general purpose and is located off-site in the 6 kV section of the reformer substation.

The control room is very spacious with a long semigraphic panel. This board contains pneumatic recorders and process

indicators, but no controllers. The temperature indication and control, with manual-to-auto switching, was done on a long operator's console located about 3-meters in front of the control board. The instrumentation is pneumatic. The plug-in controllers were PID for temperature loops and PI for all other control loops. Temperature control utilized T/Cs for measurement, EMF-to-pneumatic (potentiometric) converters and pneumatic controllers.

Instrument field mounting details are similar to those used in U.S. refineries during the 1950s and early 1960s. Flow measurement is generally by orifice plate but turbine meters are also used on some charge and product streams. A typical orifice installation used orifice blinds to hold the orifice plate.

The orifice blinds were mounted between pipe flanges. Nipples from the orifice blinds are welded to single block valves and then generally condensate pots with welded steel (carbon) tubing run down to a large heated cabinet. The cabinets probably sized originally for mercury meters, hold a small DP transmitter modelled after the Foxboro 13A and three valves manifolded to form blocking and a bypass valve.

Gauge glasses are reflex type about 0.3-meters long with multiple units assembled to cover the needed level sight range. Gauge piping was welded but with only single black valves installed. Level measurement is by displacement float, no DP level measuring systems were observed. Bi-metallic thermometers are used for local temperature indication. The reactors have both skin T/Cs and three zones of bed T/Cs. Pressure transmitters are force balance, diaphragm type, resembling Foxboro 11 GMs, and are mounted in the same large sheet metal enclosures that house the DP transmitters. Pressure gauges are Bourdon-tube type mounted on pig tails. All the transmitters and gauges have only single black valves on the process connection. The control valves are mostly of DDR manufacture and are dual seat valves. Their manifolds have gate block valves and globe bypass valves.

c) Delayed Coker and Calciner Unit

The delayed coker was started-up in 1980 and designed to process 600 000 mta. The unit is presently capable of processing 700 000 mta. The calcining addition was brought on

stream in 1989 and can process 140 000 mta. Both coker sections are of Soviet design.

The coker control room is spacious, about 25-meters by 20-meters with a 4-meter height. The semi-graphic control board is "U" shaped with the bottom of the "U" about 15-meters long on the sides and about 5-meters long. The board instruments are the same Russian built miniature (15cm x 17.5cm footprint) two-pen recorder with control on one pen. The temperature multipoint and single pen round chart recorders are potentiometric type. Both resemble the old Honeywell-Brown type that were used in most U.S. refineries. Temperature control utilizes a T/C as the measuring device, an EMF-to-pneumatic converter and a pneumatic controller. The temperature controllers were PID while the remaining controllers were PI. The visual alarm indicators are mounted on the semi-graphic panel. The board was lit by overhead fluorescent lights. The control room and lighting levels are below that seen in U.S. refineries.

The back of the board was enclosed with doors at the top part of the "U" sections. Plastic tubing and plastic sheathed cables are the tubing and wiring methods used on the back-of-the--board. Fifty settleable receiver gauge type switches were mounted back of the board to provide alarm signals from the pneumatic analog process signals. About 25 recorder/controllers were neatly racked in the backboard area as spares. Two filters, control valves and controllers make-up a system and a spare to provide clean regulated instrument air to the control building.

The fireproofing, except for three tower skirts which are brick-faced, is poured concrete. Insulation is basically blanket fiberglass or mineral wool covered with sheet metal. Both the thickness coverage and quality of the insulation are below Western standards. Piping is mostly overhead, but some piping, mostly small sizes, is run on the deck providing tripping hazards. Most of the piping on the coke drum structure is uninsulated.

The four-drum coking structure has the bottom 7-meters of the drilling section part of the structure enclosed. On one side of the structure, a staircase runs from grade to the top of the enclosed section. On the other side of the structure an elevator covers the same distance. A 500-cubic-meter capacity concrete

bin extends under the four drums with a sloped side under the drums. A bridge crane runs the length of the concrete bin and is used to move the coke after it has been cut and fallen out of the drum bottom into the concrete bin.

Unit lighting is incandescent with explosion-proof fixtures. Open area lighting is done with incandescent floodlights mounted on 15-meter high lighting towers. The units lighting level are well below that found in equivalent Western units. The unit's motors are TEFC XP induction motors. The motor starters are located in an air purged substation building located just outside the unit's battery limits.

The majority of the pumps on the unit are centrifugal, mostly with single mechanical seals and the remaining having double seals. The 2 000 kW decoking water pump and spare have a discharge pressure of 186kg/cm2 (2646 psi). Besides the centrifugal pumps, some large duplex steam pumps, some electric driven reciprocating pumps and a gear pump were also noted.

There are four large side-fired up-draft furnaces. The furnaces form two identical sets and are mirror imaged. The furnace burners are gas fired only and are set at about a 45° angle to the horizontal. There are two 7-mt/hour (design) 12 kg/cm2 waste heat boilers using the furnace's flue gas as a heating media. Actual production during the unit visit was about 8 mt/hour.

The calcinating unit consists of the following: a conveyer belt system from the concrete raw coke storage bin, a coke cruncher, another conveyor belt system, three intermediate storage bins, a conveyor belt system, a feeder system, a combination rotary kiln and waste heat boiler, a concrete stack, an induced draft fan, an ash separator, a conveyor belt system and two calcined coke, 4 concrete hopper bin storage units for trial hopper-car loading. The calciner kiln runs at 1 400°C (2 552°F). The 40 mt/hour waste heat boiler was making 35 mt. hour.

C. PAVLODAR REFINERY

1. Summary Description of the Refinery

a. Refinery Description

The Pavlodar Refinery is located in the northeastern part of the country, near the Siberian border, on the Irtysh River. The facility began operation in 1978, with start-up of the combined unit (Atmospheric Crude Distillation, Kerosene and Diesel Hydrodesulfurizers, Gas Fractionation and Catalytic Reformer). Nominal capacity is 7.5 million mta of West Siberian Crude Oil. The heavy oil combined unit (Vacuum Distillation, Vacuum Gas Oil Hydrodesulfurization, Fluid Catalytic Cracker, Gas Concentration and Visbreaker) began operation in 1983. Other units were started up from 1978 through 1990, see Table V C1a-1 for a list of all refinery units, their design capacities, 1992 actual throughput and start-up dates.

A newer, Second Combined Unit, rated at 6 million mta is in place, partially constructed. Progress on completion is reported to be extremely slow, due to lack of funding. About 60 percent of the equipment is in place, however, there is no piping, electrical, or instrumentation installed. Equipment that was delivered to the refinery but not erected at the time of the cessation of work, has been sold and moved off site.

Five Year Historical Production related data for the Pavlodar Refinery is shown in Table V C1a-2.

The 1992 Product Slate is shown in Table V C1a-3.

The John Brown team would like to acknowledge and give thanks to the following for their support and assistance during the time of our field visit, which was from 8 through 12 November, 1993.

Gennadi G. Moschenko	Director
Valeri T. Liventsev	Chief Engineer
Vasili M. Tomilin	Deputy Director Chief Economist
Zhaksalyk K. Zhaparov	Deputy Director of Construction
Vladimir R. Veinbender	Chief Technologist
Mikhail I. Sochiev	Chief Mechanic
Viktor D. Filatov	Chief of Power Engineering
Alexander A. Melnichek	Deputy Chief-Power Engineering
Gennadi I. Bakhinov	Deputy Director of International Contact
Anatoly A. Bugaev	Environmental Department Chief
Boris E. Bersenev	Chief of Instrument Section

TABLE V C1a-1
PAVLODAR REFINERY
REFINERY CONFIGURATION

UNIT	DESIGN THOUSAND MTA	ACTUAL CAPACITY 1992 THOUSAND MTA	YEAR START-UP	DESIGN ORGANIZATION
Atmospheric Crude Distillation	7 500 000	6448.1 -Desalter (6434.8) -Crude Unit	1978	LGNH St. Petersburg
Kerosene Hydrosulfurization	600 000	344.1	1978	LGNH St. Petersburg
Diesel Hydrosulfurization	2 000 000	1485.7	1978	LGNH St. Petersburg
Gas Fractionation	400 000	324.0	1978	LGNH St. Petersburg
Catalytic Reformer	1 000 000	996.7	1978	LGNH St. Petersburg
Vacuum Unit	4 000 000	1993.1	1983	Grozny
FCC	2 000 000	966.3	1983	Grozny
Visbreaker	1 600 000	580.6	1983	Grozny
Vacuum Gas Oil Hydrodesulfurizer	2 200 000	1262.0	1983	Grozny
Gas Concentration	1 350 000	596.7	1983	Grozny
Bitumen Unit	1 400 000 (Feed) 500 000 (Bitumen)	645.6 (Feed) 277.6 (Product)	1979	Rostovvnipineft
Delayed Coking	610 000 (Feed) 120 000 (Coke)	324.0 (Feed) 74.0 (Product)	1986	Bashgipronefteckin
Calcined Coke	120 000	---	1990	L'vov Institute
Sulfur	20 000 (Product)	7.65 (Product)	1979	Moscow Institute
Hydrogen	150 000 (100% H_2)	9.7 (Product)	1983	Grozny
MEA	---	---	1978	---

TABLE V C1a-2

PAVLODAR REFINERY HISTORICAL PRODUCTION LEVELS

YEAR	CRUDE THROUGHPUT MTA
1988	7 326 804
1989	7 539 000
1990	7 390 900
1991	7 149 300
1992	6 434 850
1993	5 500 000 (plan)

TABLE V C1a-3
PAVLODAR
1992 PRODUCT SLATE

PRODUCT		QUANTITY METRIC TONNES
Propane/Propylene		7 900
Butane/Butylene		56 200
LPG		119 600
Regular Gasoline		1 808 200
Premium Gasoline		67 600
Kerosene		525 600
Diesel Oil		1 705 700
Fuel Oil		119 200
Heavy Fuel Oil (Mazut)		1 212 500
Feed to Carbon Plant		37 400
Bitumin		275 800
Road Building	142 900	
Construction	41 600	
Roofing	91 300	
Sulfur		7 650
Coke		63 800
Losses		153 200
Total Reported Product		6 160 350
Unaccounted for Difference		274 450
Crude Feed from Desalter		6 434 800

b. Crude Oil and Other Feedstock Supply

Crude oil is supplied to the refinery through a pipeline via Omsk from the Western Siberian oil fields. Table V C1b-1, shows characteristics

of crude oil currently in use, as obtained from the Pavlodar Refinery staff.

c. **Impact of Crude Oil Changes**

The refinery staff is sensitive to the potential that a pipeline may be installed to bring Tengiz, or other Western Kazakhstan crude oil to the Pavlodar facility. While the decision to build such a line is still in the planning stage, the refinery is considering plans to modify the pre-flash column and top section of the main atmospheric crude column to accommodate the new feedstock.

The use of a computer orientated refinery simulation program would greatly facilitate the impact of the re-design process resulting from changing crude oil feedstock. It is strongly recommended that such analysis be undertaken in order to determine the extent of equipment modifications necessary. For example, the Tengiz crude is lighter, which means that equipment loading in the pre-flash tower, top section of the new column, and associated ancillary equipment, (piping, instruments, pumps, heat exchangers) may be undersized and require replacement. Further, downstream processing units may be effected in that they may be undersized form a hydraulic, or fluid throughput viewpoint.

TABLE V C1b-1
PAVLODAR REFINERY
CHARACTERISTICS OF
WEST SIBERIAN CRUDE[1]

PROPERTY	
Density @ 20°C, g/cm³	0.8406
Distillation	
IBP	46°C
IBP To 100°C	8.5% Vol.
100°C to 130°C	8.5% Vol.
130°C to 160°C	7.0% Vol.
160°C to 180°C	4.5% Vol.
180°C to 250°C	12.5% Vol.
250°C to 300°C	12.0% Vol.
Chloride Content, mg/cubic decimeter	5.1
Water Content, Wt%	0.04
Sulfur Content, Wt%	0.58
Sediment (Inert) Content, Wt%	None
Ash Capacity, Wt%	0.026
Viscosity at 20°C, cs	6.94
Coking Capacity, Wt%	2.99
GASOLINE FRACTION, IBP to 180°C	
Vol %, Yield	26.36
Sulfur, Wt%	0.02
Density, 20°C, g/cm³	0.739
LIGHT GAS OIL, 180 to 350°C	
Vol %, Yield	28.39
Sulfur, Wt%	0.45
Density, 20°C, g/cm³	0.841

[1]Third Quarter, 1993

Tengiz crude is also higher in sulfur; the desulfurization philosophy and operation of units or addition units required for sulfur removal of also needs to be re-evaluated in context with this potential change.

2. Description of Process Units

a. Crude Unit

The nominal capacity of the crude unit is 7.5 million mta. Operating history and start-up date information is shown in earlier parts of this report. At the time of the John Brown visit, the crude unit was operating at 40 percent of capacity, or 9 000 metric tonnes per day, due to crude oil supply problems with Russia. Nominal feed rates are reported to be 75 to 80 m^3/hr, with minimum at 55 m^3/hr and maximum at 90 m^3/hr, measured at 90°C, after the desalting process.

The crude column side cut strippers are not steamed, although the potential exists to do so. Main column bottoms are steam stripped. The atmospheric column top pressure is reported to be up to 1.0 kg/cm^2 in the summer months. Pre-flash column feed varies between 190 to 240°C with crude furnace outlet at 350 to 370°C. At capacity, (7.5 million mta), the transfer line to the pre-flash column is limiting.

Value trays are used in the distillation columns. Some corrosion has been observed in the atmospheric column and all trays in the stabilizer have been replaced. Column shells are of carbon steel with some internals of 8 percent chrome, 13 percent nickel. Anti-corrosion inhibitor (purchased from Russia) is added to the top of the main column, and ph target is 7.5.

Optimization of the crude heat exchange train should be considered using pinch analysis and/or HTRI programs. The savings potential in efficient heat exchange train operations can be significant. Table V C2a-1 shows the 1992 material balance for the unit.

The overall block flow diagram is shown in Figures 2287-22-10-39, while Figures 2287-22-10-41 and 42, show the Light Oil and Heavy Oil Combined Unit block flow scheme.

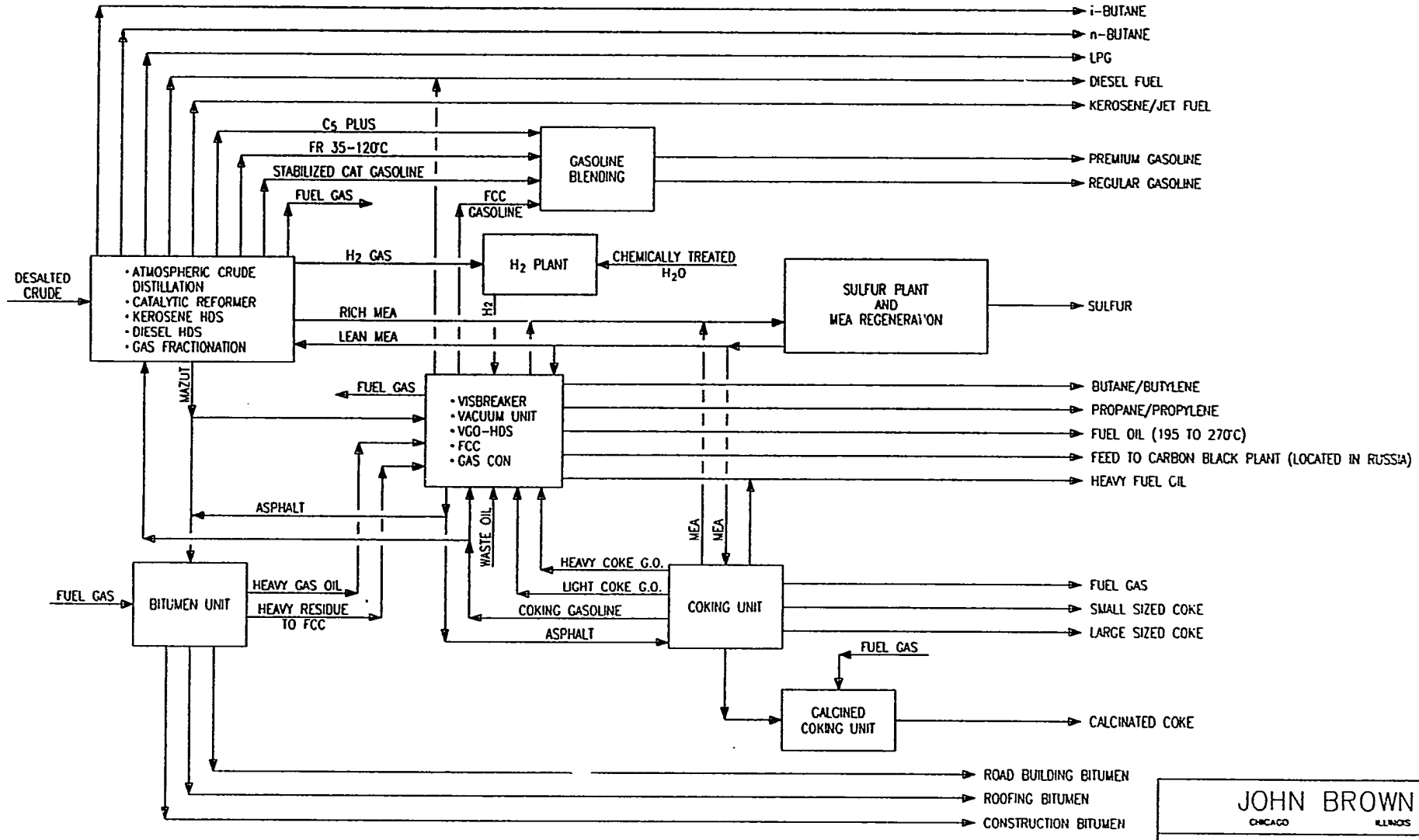

FR = FRACTION
HDS = HYDRODESULFURIZATION

DATE	REV	BY	APPR.	DESCRIPTION

JOHN BROWN
CHICAGO ILLINOIS

PAVLODAR REFINERY
BLOCK FLOW DIAGRAM

DWG. No. 2287-22-10-39 | A

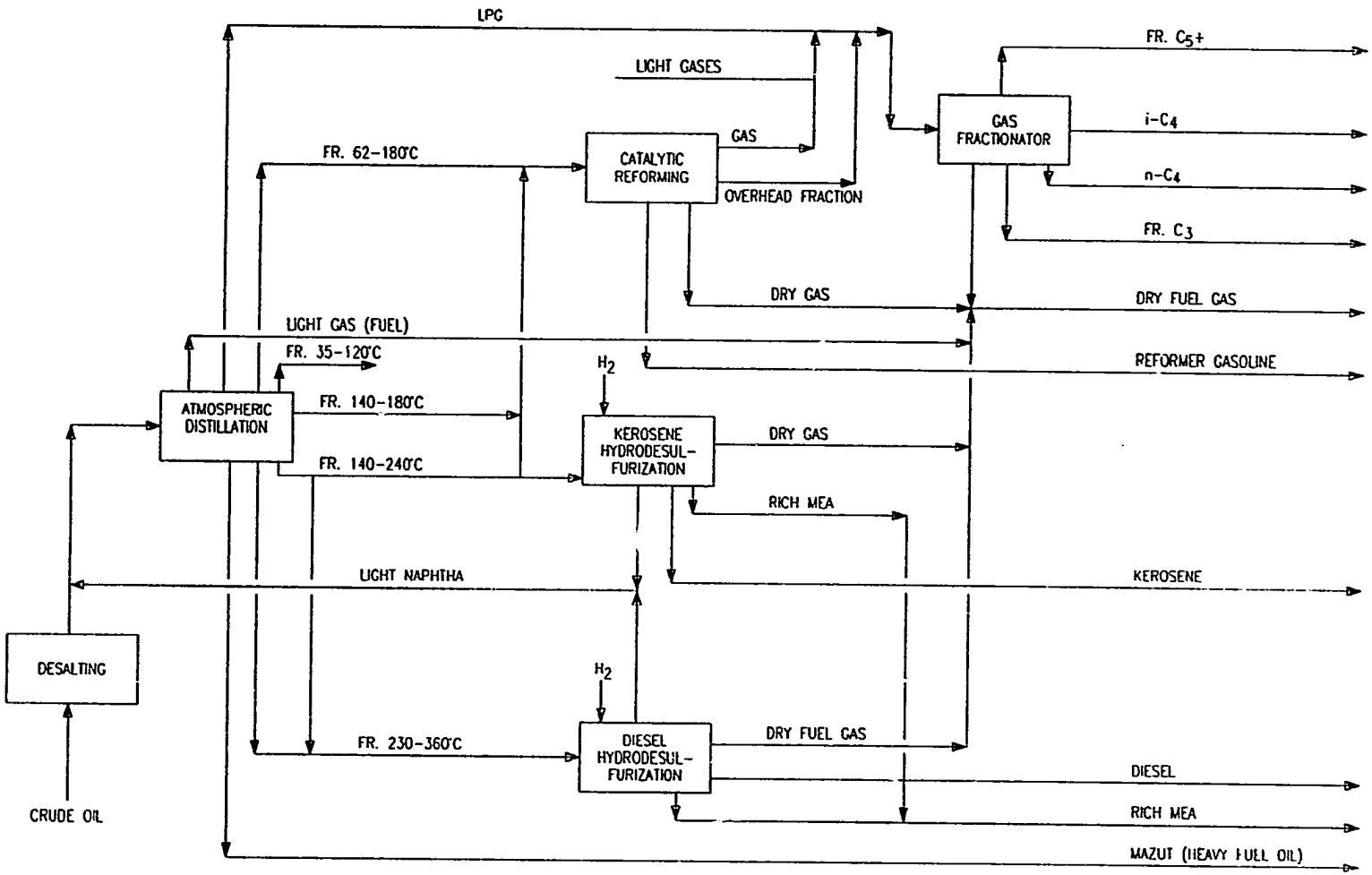

FR. = FRACTION

DATE	REV	BY	APPR	DESCRIPTION

JOHN BROWN
CHICAGO ILLINOIS

PAVLODAR REFINERY
ATM. COMBINED UNIT
FLOW DIAGRAM

DWG. No. 2287-22-10-41 | A

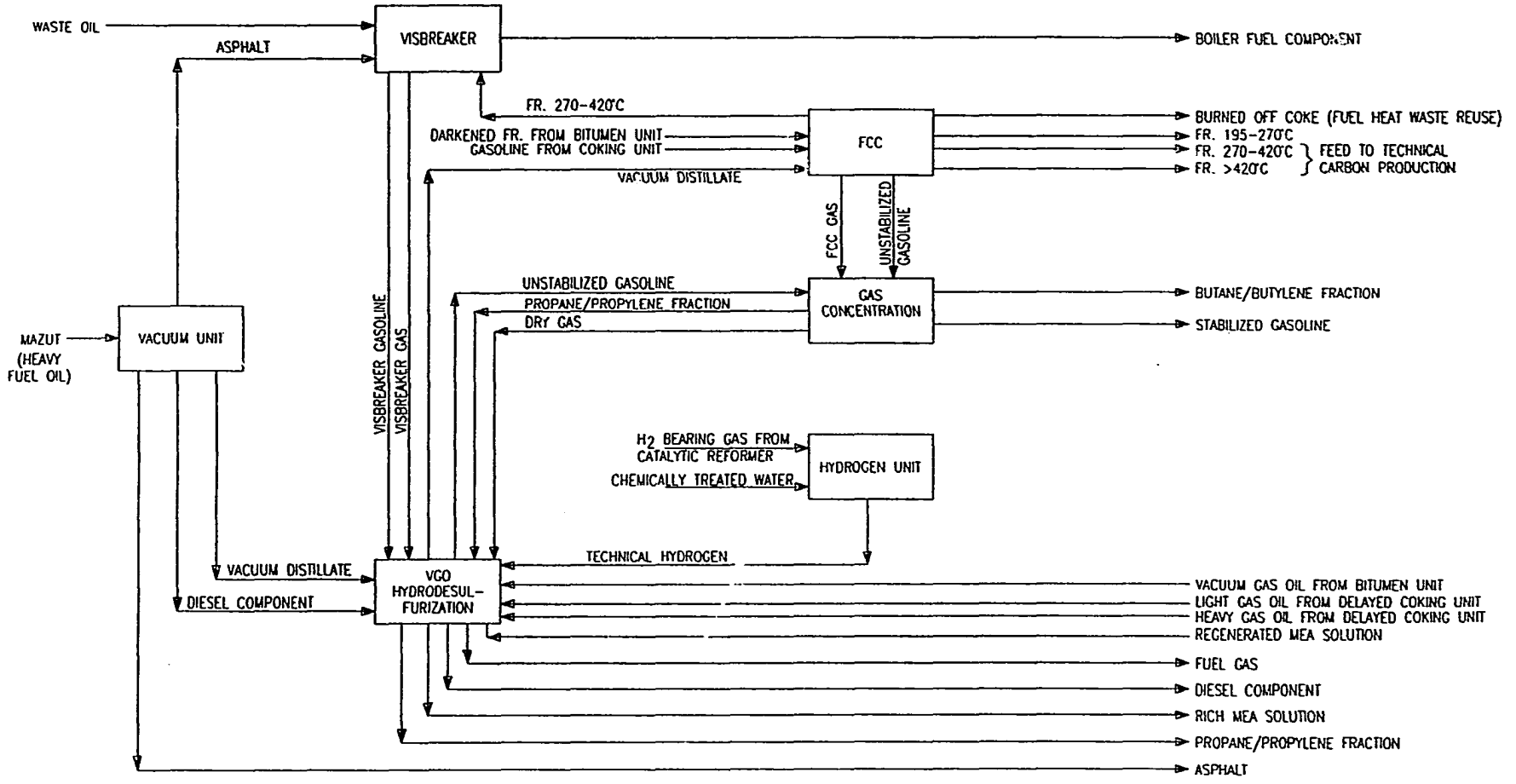

FR. = FRACTION

DATE	REV	BY	APPR	DESCRIPTION

JOHN BROWN
CHICAGO ILLINOIS

PAVLODAR REFINERY
HEAVY PROCESS COMBINED UNIT
FLOW DIAGRAM

DWG. No. 2287-22-10-42 | A

TABLE V C2a-1
PAVLODAR REFINERY
MATERIAL BALANCE 1992
ATMOSPHERIC DISTILLATION UNIT

Working Days - 342

ITEM	WT %	MTA
INLETS:		
Crude Oil	(100.0)	(6 448 119)
Desalted Crude Oil	(99.8)	(6 434 877)
Losses	(0.2)	(13 242)
TOTAL	100.0	6 448 119
PRODUCTS:		
Cut From 35-120°C	4.49	288 745
Cut From 62-180°C	16.47	1 060 006
Cut From 140-240°C	8.60	553 351
Cut From 180-350°C	21.38	1 375 909
Cut From 180-360°C	2.0	127 051
Cut From 230-350°C	2.12	136 462
LPG	3.83	246 241
FR > 350°C	39.89	2 566 913
Lt. Gases	0.52	33 698
Losses	0.70	46 501
TOTAL	100.00	6 434 877

b. Catalytic Reformer

The Catalytic Reformer, with a capacity of one million mta, has a nominal feed rate of 175 to 178 m^3/hr (with feed conditions measured at 40°C and 20 kg/cm^2). Minimum feed rate is not less than 140 m^3/hr and maximum reported at 178 m^3/hr.

A fourth reactor was added in 1992 to increase conversion of Napthenic hydrocarbons in order to improve the octane of the reformate. This enabled the refinery to eliminate TEL addition to gasoline. The first reactor in the system uses an Al-Pt catalyst, with Pt-Rh catalyst used in the last three reactors. Catalyst life for the Al-Pt is 5.5 years and seven years for the Pt-Rh. Catalysts were developed by the Leningrad Institute. Regeneration takes place once a year and requires five days downtime. Product octane is reported to be in the 79 plus range.

The refinery has been working for a year and a half to get permission to send their spent catalyst to the west in exchange for newer, improved material, but they have run into government approval obstacles. It is expected that a French Catalyst, RG-482, will be installed in reactors two and three by 1995.

The 1992 catalytic reformer material balance is shown in Table V C2b-1, while Tables V C2b-2 through 4 show feed and product specifications.

TABLE V C2b-1
PAVLODAR REFINERY
MATERIAL BALANCE, 1992
CATALYTIC REFORMER UNIT

1992 OPERATING TIME - 332 DAYS

ITEM	WT%	MTA
INLETS		
62-180°C Fraction	96.6	962 841
Lt. Naphtha	3.4	33 905
TOTAL	100.0	996 746
PRODUCTS:		
Reformer Gasoline	84.0	837 267
LPG	2.8	27 834
Gas From Stabilizer	5.0	49 946
Lt. Gases	3.4	33 839
Hydrogen Rich Gas	3.6	35 829
Losses	1.2	12 031
TOTAL	100.0	996 746

TABLE V C2b-2
SPECIFICATION
CATALYTIC REFORMER FEED

PROPERTY	
Density @ 20°C, g/cm³	0.740
Sulfur, Wt%	0.02
DISTILLATION, VOLUME	
IBP	79°C
10%	94°C
50%	117°C
90%	155°C
EP	175°C
Light Products	98% Vol
Octane Number	50.01

TABLE V C2b-3
SPECIFICATION CATALYTIC REFORMER PRODUCT

PROPERTY	
Density @ 20°C, g/cm³	0.763
Corrosion, Copper Strip	Satisfied
DISTILLATION VOLUME	
IBP	51°C
10%	78°C
50%	115°C
90%	162°C
EP	185°C
Light Products	98% Vol
Octane Number	79.4
Aromatics Content, Wt%	54

TABLE V C2b-4
PAVLODAR REFINERY
SPECIFICATION
HYDROGEN RICH GAS FROM REFORMER

	UNITS	SPECIFICATION	ACTUAL 1992
Chloride Content	mg/m^3	Not more than 1.0	0.00017
Methane	% Vol	Not less more than 30	13.01
Ethane	% Vol	8-20	4.95
Propane	% Vol	Not more than 8	2.94
Iso-Butane	% Vol	Not more than 5	0.62
Normal-Butane	% Vol	Not more than 5	0.53
ISO-Pentane	% Vol	Not more than 2	0.14
Normal-Pentane	% Vol	Not more than 2	0.05
Hydrogen	% Vol	40-70	76.45
Oxygen	% Vol	Not Regulated	0.28
Nitrogen	% Vol	Not Regulated	1.03
Hydrogen Sulfide	g/m^3	0.05	0.001
Mercaptan Sulfur	---	None	None

c. Other Units

The FCC unit, part of the Heavy Oil Combined Unit is rated at two million mta. Nominal feed rate is 300 to 330 m^3/hr, measured at 280 to 300°C, at the entrance to the riser, when crude feed is 6.5 million mta. Minimum rate is 100 m^3/hr with maximum reported to be 340 to 350 m^3/hr. A W.R. Grace catalyst is in use. Operations are structured to maximize gasoline conversion, 60 to 65 percent wt.

This FCC unit was the second to be built in the former USSR, after a unit near Moscow. In 1990 this unit was modified by changing the top of the riser distribution system and the separator. The air distribution system in the regenerator was changed by removing the distribution gratings.

Table V C2c-1 shows the 1992 material balance for the unit and Table V C2c-2 provides specifications for the desulfurized FCC feedstock.

TABLE V C2c-1
PAVLODAR REFINERY
MATERIAL BALANCE, 1992
FCC UNIT

ACTUAL WORKING DAYS - 326

ITEM	WT%	MT
INLETS:		
Hydrotreated Vacuum Gas Oil	96.31	930 608
FR[1] 450-500°C	2.67	25 753
FR C_6-160°C	1.00	9 703
Hydrotreated 180-350°C Fraction From Diesel Oil HDS Unit	0.02	200
TOTAL	100.00	966 264
PRODUCTS:		
Wet Gas To Gas Concentration	22.95	221 772
FCC Gasoline	37.50	362 364
195-270°C Fraction	12.43	120 149
> 420°C Fraction	10.85	104 866
270-420°C Fraction	9.33	90 171
Coke Burned	5.18	50 010
Losses	1.75	16 932
TOTAL	100.00	966 264

[1]Fr. = Fraction

TABLE V C2c-2
PAVLODAR REFINERY
SPECIFICATION OF FCC FEED
HYDROTREATED VGO

PROPERTY	1992	LATEST OBSERVATION[1]
Density @ 20°C, g/cm³	0.885-0.907	0.900
DISTILLATION, VOLUME		
IBP	185-310°C	---
10%	285-360°C	---
30%	345-390°C	---
50%	370-410°C	---
70%	400-435°C	---
90%	425-480°C	---
EP	465-520°C	---
Light Products to 350°C	4 to 33 Vol%	10
Products to 360°C	14.8 Vol%	---
Characterization Factor	10.88 to 11.12	---
Molecular Weight	304 to 352	---
Sulfur Content, Wt%	0.23 to 0.43	0.32
Ash Capacity, Wt%	0.05 to 0.38	---
Aniline Point, °C	83 to 87	---
Viscosity @ 20°C, cs	16 to 27	---

[1]Date not provided, Late 1993 assumed.

Additionally, 1992 material balance data is also included for the following units, in Table V C2b-5 through V C2b-14.

- Gas Fractionation
- Diesel Hydrodesulfurization
- Visbreaker
- Gas Concentration
- Vacuum Gas Oil Hydrodesulfurization
- Delayed Coking
- Bitumen
- Sulfur
- Hydrogen Plant

TABLE V C2b-5
PAVLODAR REFINERY
MATERIAL BALANCE 1992
GAS FRACTIONATION UNIT

WORKING DAYS - 342

	WT%	MT
INLETS		
LPG From Crude Oil Distillation	76.0	246 241
LPG From Catalytic Reformer	8.6	27 834
Gas After Stabilizer from Catalytic Reformer	15.4	49 946
TOTAL	100.0	324 021
PRODUCTS		
Propane	12.7	41 339
Butane	21.2	68 589
Iso-Butane	3.2	10 416
Lt. Naphtha	48.1	155 806
Dry Fuel Gas	14.1	45 786
Losses	0.7	2 187
TOTAL	100.0	324 123 [1]

[1]Does not balance, data as reported.

TABLE V C2b-6
PAVLODAR REFINERY
MATERIAL BALANCE, 1992
KEROSENE HYDRODESULFURIZER

WORKING DAYS - 350

	WT%	MTA
INLETS:		
140-240°C Fraction from Crude Distillation Unit	99.0	340 713
H_2 Rich Gas from Catalytic Reformer	1.0	3 410
TOTAL	100.0	344 123
PRODUCTS		
Hydrotreated 140-240°C Fraction	97.5	335 601
Lt. Naphtha	1.3	4 414
Hydrogen Sulfide	0.1	328
Lt. Gases	0.6	2 057
Losses	0.5	1 723
TOTAL	100.0	344 123

TABLE V C2b-7
PAVLODAR REFINERY
MATERIAL BALANCE-1992
DIESEL OIL HYDRODESULFURIZATION UNIT

WORKING DAYS - 326

	WT%	MTA
INLETS		
180-350°C Cut From Crude Dist. Unit	88.4	1 313 062
180-360°C Fraction	8.5	127 051
Pentane to -180°C From Coking Unit	2.0	29 354
H_2 Rich Gas From Catalytic Reformer	1.1	16 205
TOTAL	100.0	1 485 672
PRODUCTS		
Hydrotreated 180-350°C Fraction	88.0	1 307 615
Hydrotreated 180-360°C Fraction	8.5	126 584
Lt. Naphtha	2.0	29 491
Hydrogen Sulfide	0.2	2 841
Lt. Gases	0.8	11 910
Losses	0.5	7 231
TOTAL	100.0	1 485 672

TABLE V C2b-8
PAVLODAR REFINERY
MATERIAL BALANCE, 1992
VISBREAKER UNIT

WORKING DAYS - 272

	WT%	MTA
INLETS:		
Asphalt From Vacuum Dist. Unit	96.8	562 255
Waste Oil	3.2	18 390
TOTAL	100.0	580 645
PRODUCTS:		
Fraction Greater than 350°C	98.67	572 914
Visbreaker Gasoline	0.95	5 513
Losses	0.38	2 218
TOTAL	100.0	580 645

TABLE V C2b-9
PAVLODAR REFINERY
MATERIAL BALANCE, 1992
GAS CONCENTRATION UNIT

ACTUAL WORKING DAYS - 314

	WT%	MTA
INLETS:		
Wet Gas From FCC	37.16	221 772
Hydrotreated Gasoline From Vacuum Gas Oil Hydrodesulfurizer	2.11	12 581
FCC Gasoline	60.73	362 364
TOTAL	100.0	596 717
PRODUCTS:		
Gasoline	77.57	462 860
Propane/Propylene	1.66	9 925
Butane/Butylene	10.14	60 484
Dry Fuel Gas to Vacuum Gas Oil Hydrodesulfurizer Unit	8.71	52 005
Losses	1.92	11 443
TOTAL	100.0	596 717

TABLE V C2b-10
PAVLODAR REFINERY
MATERIAL BALANCE, 1992
VACUUM GAS OIL HYDRODESULFERIZATION UNIT

ACTUAL WORKING DAYS- 326

ITEM	WT%	MTA
INLETS:		
350-450°C Fraction	15.20	191 783
Diesel Oil from Vacuum Distillation Unit	2.36	29 747
180-350°C Cut From Coking Unit	5.39	68 071
195-270°C Fraction	1.76	22 247
Vacuum Gas Oil	55.02	694 290
230-350°C Fraction	10.81	136 462
Fuel Oil From Coking Unit	3.58	45 125
Pentane to 160°C	0.10	1 210
H_2 From H_2 Unit	0.76	9 643
H_2 From Catalytic Reformer	0.01	190
Dry Fuel Gas	4.18	52 742
Propane/Propylene	0.79	9 925
Visbreaker Gasoline	0.04	551
TOTAL	100.0	1 261 986
PRODUCTS:		
Hydrotreated Vacuum Gas Oil	73.77	930 970
Hydrotreated 180-350°C Fraction	18.79	237 131
Hydrotreated Visbreaker Gasoline to Gas Concentration Unit	1.00	12 581
Propane/Propylene	0.77	9 739
Fuel Gas	4.25	53 602
Hydrogen Sulfide	0.41	5 160
Losses	1.01	12 803
TOTAL	100.0	1 261 986

TABLE V C2b-11
PAVLODAR REFINERY
MATERIAL BALANCE, 1992
DELAYED COKING UNIT

WORKING DAYS - 261

	WT%	MT
INLETS:		
Asphalt	99.5	322 702
Fraction > 350°C (Mazut)	0.5	1 500
TOTAL	100.0	324 202
PRODUCTS:		
Coke	22.8	74 023
Large Size Coke	(9.6)	(31 302)
Small Size Coke	(13.2)	(42 721)
Pentane to 160°C; to Diesel Oil HDS Unit	12.7	41 166
180-350°C Fraction	22.4	72 733
Fuel Oil	28.8	93 278
Hydrogen Sulfide	0.3	874
Dry Fuel Gas	8.7	28 340
Losses	4.3	13 788
TOTAL	100.0	324 202

TABLE V C2b-12
PAVLODAR REFINERY
MATERIAL BALANCE, 1992
BITUMEN UNIT

WORKING DAYS - 336

	WT%	MT
INLETS:		
Fraction > 350°C	71.7	462 917
Asphalt	28.3	182 718
TOTAL	100.0	645 635
PRODUCTS:		
Bitumen, including:	43.0	277 681
Road-Building Bitumen	(22.5)	(145 550)
Construction Bitumen	(6.5)	(41 598)
Roofing Bitumen	(14.0)	(90 483)
350-450°C Fraction	31.52	203 534
450-500°C Fraction	15.93	102 877
Asphalt	7.50	48 347
Oxidation Gases	0.5	3 096
Losses	1.55	10 100
TOTAL	100.0	645 635

TABLE V C2b-13
PAVLODAR REFINERY
MATERIAL BALANCE, 1992
SULFUR UNIT

WORKING DAYS - 321

	WT%	MT
INLETS:		
H_2S From Diesel & Kerosene HDS Units	35.1	3 169.0
H_2S From Heavy Oil Unit	55.2	4 974.0
H_2S From Coking Unit	9.7	874.0
TOTAL	100.0	9 017.0
PRODUCTS:		
Sulfur	84.8	7 650.0
Losses	15.2	1 367.0
TOTAL	100.0	9 017.0

TABLE V C2b-14
PAVLODAR REFINERY
MATERIAL BALANCE, 1992
HYDROGEN UNIT

ACTUAL WORKING DAYS - 267

	WT%	MT
INLETS:		
Hydrogen Rich Gas	16.15	14 406
Water	83.85	74 815
TOTAL	100.0	89 221
PRODUCTS:		
Technical H_2 To Vacuum Gas Oil Hydrodesulfurizer	10.84	9 673
Water	47.00	41 937
Losses	42.16	37 611
TOTAL	100.0	89 221

d. Product Specifications

Refinery Product Specifications are as shown in Tables V C2d-1 through V C2d-14 , for the following products:

- LPG
- Gasoline, Regular and Premium
- Jet Fuel
- Kerosene
- Diesel Oil
- Home Heating Fuel
- Vacuum Gas Oil
- Straight Run Heavy Fuel Oil (Mazut)
- M-100 Mazut
- Gas Oil for Carbon Black Production
- Heavy Gas Oil
- Asphalt (Guydron)
- Bitumen
- Coke, Large & Small Sized
- Sulfur

TABLE V C2d-1
LPG (LIQUIFIED PETROLEUM GASES)

COMPOSITION	PROPANE	BUTANE	LPG
Vapor Pressure at 20°C	Min. 0.16	0.52	1.08
Volatile Residue, LV%	Max. 0.7	0.67	0.01
Butane and Heavier, LV% (Max)	---	7.81	46.43
Pentane and Heavier, LV% (Max)	---	91.39	51.68
H_2S, ppmw	Max. 0.003	0.0021	0.0041
H_2S plus mercaptan	Max. .013	0.0002	1.08
Free Water Content	None	None	None
Bottled at Refinery?	No	No	No

TABLE V C2d-2
GASOLINE

TYPE	REGULAR	PREMIUM
Density @ 20°C, g/cm³	0.736	0.731
Octane Numbers		
RON		91
MON	76.5	80 to 81.5
Distillation Volume		
10%	61°C	60°C
50%	100°C	107°C
90%	162°C	173°C
EP	197°C	199°C
Distillation Residue, Wt%	1	1.1
Distillation Residue plus Losses	2.67	3.0
RVP KPa	42.87	43.19
Sulfur Content, Wt%	0.025	0.022

TABLE V C2d-3
PAVLODAR REFINERY
JET FUEL SPECIFICATION
GOST 10227-86

PROPERTY	STANDARD	ACTUAL 1992		1993
		4th QUARTER	AUGUST	3rd QUARTER ACTUAL
Density, 20°C, g/cm³	0.775	0.793	0.792	0.791
Distillation Volume, IBP, Min.	135°C	144°C	144°C	139°C
10%, Max.	175°C	165°C	164°C	161°C
50%, Max.	225°C	193°C	191°C	188°C
90%, Max.	270°C	218°C	219°C	217°C
98%, Max.	280°C	235°C	237°C	237°C
Viscosity - 20°C, cs, Min.	1.25	1.54	1.52	1.544
Viscosity - 40°C, cs, Max.	16.0	7.0	6.8	6.97
Heat of Combustion, KJ/kg, Min.	43 120	43 212	43 220	43 314
Smoke Point, mm, Min.	25	26	25.5	25.0
Acidity $\frac{mg\ KOH}{100\ ml\ Jet\ Fuel}$	0.4 - 0.7	0.51	0.54	0.247
Iodine Nr. $\frac{g\ I^{\circ}}{100\ gm\ Jet\ Fuel}$ Max	0.5	0.23	0.26	0.30
Flash Point, Closed Cup, Min.	28°C	40°C	38°C	33°C
Crystallization Point	-55°C	-57°C	-56°C	-58°C
Aromatics - Wt%, Max.	22	19	19	18

TABLE V C2d-3 (continued)
PAVLODAR REFINERY
JET FUEL SPECIFICATION

PROPERTY	STANDARD	ACTUAL 1992		1993
		4th QUARTER	AUGUST	3rd QUARTER ACTUAL
Actual Resins Content mg/100ml Fuel, Max.	4.0	None	None	---
Total Sulfur, Wt%, Max.	0.10	0.017	0.018	0.0303
Mercaptan Sulfur	0.001	0.0001	0.0001	None
Copper Strip, 100°C, 3 hours	Satisfied	Satisfied	Satisfied	Satisfied
Ash Capacity, Wt%, Max.	0.003	0.0016	0.0019	0.0017
Water Soluable Acids	None	None	None	None
Hydrogen Sulfide	None	None	None	None
Water & Sediment	None	None	None	None
Naphthenes - Wt%, Max.	1.5	1.14	1.22	---
THERMAL STABILITY DATA, 5 HOUR TEST				
Residue mg/100ml Fuel Max.	6.0	None	None	None
Soluable Resins mg/100ml Fuel, Max	30.0	8.5	12.2	---
Unsoluable-Resins, mg/100ml, Max.	3.0	None	None	---

TABLE V C2d-4
PAVLODAR REFINERY
DIESEL OIL SPECIFICATIONS[1]

PROPERTY	3rd QUARTER 1993, ACTUAL
Cetane Rating	50.4
Distillation, Volume 50%	277°C
Distillation, Volume 96%	360°C
Viscosity, cs	5.544
Solidification	-10°C
Flash Point, Closed Cup	63°C
Sulfur Content, Wt%	0.171
Mercaptan Sulfur, Wt%	0.00054
H_2S Content	None
Copper Strip	Satisfied
Water-Soluable Acids and Alkalis Content	None
Resins Content, $\frac{mg}{100\ cm^3\ Diesel\ Oil}$	5.3
Acidity, $\frac{mg\ KOH}{100\ cm^3\ Diesel\ Oil}$	1.090
IodineNumber, $\frac{g\ iodine}{100g\ Diesel\ Oil}$	0.82
Ash Capacity	0.82
Coking Capacity of 10% of Residue, Wt%	0.0045
Filtration Number	0.024
Sediment (Inert) Content, Wt%	1.40
Water Content, Wt%	0.000
Density @ 20°C, g/cm³	0.839

[1]Standard not made available.

TABLE V C2d-5
PAVLODAR REFINERY
FUEL OIL SPECIFICATIONS FOR DOMESTIC USE[1]

	STANDARDS		ACTUAL		
	MIN	MAX	APRIL	MAY	JUNE
10% Dist. °C	160°C		226	221	222
90% Dist. °C		360	311	306	300
Viscosity, 20°C - cs		8.0	4.400	4.150	3.250
Solidification Point, °C		-15	-20	-15	-15
Flash Point, °C closed cup	45		91	82	79
Sulfur, Wt%		1.1	0.70	0.58	0.74
H_2S, Wt%		Neg	---	---	---
Copper Strip Test		Satisfied	---	---	---
Acidity		5.0	2.140	1.850	1.855
Ash Capacity		0.02	0.0011	0.0000	0.0113
Coking Capacity Final 10% Residue		0.35	0.165	0.130	0.250
H_2O - Vol %		Trace	0	0	0
Sediment (Inert), Wt%		Neg	0	0	0
Color		Lt. Brown/Black	---	---	---
Density, g/m^3		Not Regulated	0.921	0.921	0.921

TABLE V C2d-6
PAVLODAR REFINERY
SPECIFICATION VACUUM GAS OIL

PROPERTY	
Density at 20°C, g/cm³	0.9074
Distillation	
IBP	216°C
Fraction < 350°C	16 % Vol
Fraction < 360°C	19 % Vol
Fraction < 500°C	97 % Vol
EP	502 °C
Products	98 % Vol
Viscosity, cs, 50°C	23.3
Coking Capacity, Wt%	0.14
Sulfur, Wt%	1.09

TABLE V C2d-7
PAVLODAR REFINERY
HEAVY FUEL OIL SPECIFICATION
(STRAIGHT RUN MAZUT)

PROPERTY	UNITS	STANDARD	ACTUAL, 1992
Density	g/cm³	Max. 1.015	0.933
Flash Point, Open Cup	°C	170 Min.	192
Distillation Volume			
IBP	°C	Not Regulated	262
Products to 350°C	Vol%	8.0 Max.	6.8
Lower Heat of Combustion	KJ/kg	40 530 Min.	46 394
Sulfur Content	Wt%	2 Max.	1.26

TABLE V C2d-8
PAVLODAR REFINERY
HEAVY FUEL OIL SPECIFICATION (MAZUT)

	M-100 FOR SALE	M-40 FEED TO VAC. DIST. UNIT
Viscosity - 80°C - m^2/Sec	73.93	39.35
Ash Content, Wt%	0.0710	0.0681
Sediment (Inert), Wt%	0.069	0.074
Water, Wt%	0.24	0.30
Water Soluable Acids and Alkalais	None	---
Total Sulfur Wt%	1.293	1.423
Flash Point - Open Cup, °C	155	143
Solidification Point, °C	25	10
Lower Heat of Combustion, KJ/kg	46 262	45 806
Density, 20°C, g/cm^3	0.970	0.959

TABLE V C2d-9
PAVLODAR REFINERY
SPECIFICATION FOR FEED TO TECHNICAL CARBON PRODUCTION[1]
(FCC GAS OIL)

PROPERTY	STANDARD	ACTUAL, 1992
Density, 20°C, g/cm^3, Min.	0.995	1.020
Correlation Index, Min.	95	107.2
Distillation - 50%, Max.	410°C	337°C
Sulfur, Wt%, Max.	3.0	1.77
Coking Capacity, Wt%, Max.	2.0	1.11
Viscosity - 50°C, cs, Max.	25	7.44
Water - Wt%, Max.	0.2	Trace
Solidification Point, °C, Max.	25	25
Sediment (Inert), Max.	0.01	0.0088

[1] This product sent to Russia for processing.

TABLE V C2d-10
PAVLODAR REFINERY
SPECIFICATION
HEAVY GAS OIL

PROPERTY	STANDARD		ACTUAL
	MAXIMUM	MINIMUM	SEPT. 1993
Density, g/cm³	1.000		1.006
Sulfur Wt%		3.0	1.73
Coke Capacity, Wt%		2.0	1.900
Viscosity - 50°C cs		25	7.27
Water - Vol%		0.2	Traces
Solidification Point, °C		25	25
Sediment (Inert) - Wt%		0.03	0.030

TABLE V C2d-11
PAVLODAR REFINERY
ASPHALT SPECIFICATION (GUDRON)

PROPERTY	
Density at 20°C, g/cm³	0.9893
Viscosity at 80°C, mm²/sec	28
Sulfur, Wt%	1.55
Distillation:	
IBP	282°C
Fraction < 350°C	0.5% Vol
Fraction < 360°C	1.0% Vol
Fraction < 500°C	22% Vol
End Point	536°C
Light Products	35% Vol

TABLE V C2d-12
PAVLODAR REFINERY
BITUMEN SPECIFICATIONS

PROPERTY	ACTUAL[1]	STANDARD
CONSTRUCTION BITUMEN		
Penetration Needle Depth at 25°C, mm	14	Max 40 Min 5
Softening Temperature, °C	92	Max 105 Min 70
ROOFING BITUMEN		
Penetration Needle Depth at 25°C, mm	185	Max 220 Min 160
Softening Temperature, °C	40	Max 50 Min 37
ROAD-BUILDING BITUMEN		
Penetration Needle Depth at 25°C, mm	80	Max 130 Min 40
Softening Temperature, °C	49	Min 43
Stretchability at 25°C, cm	76.3	Min 40

[1] Date basis not provided. 3rd Quarter 1993 most likely.

TABLE V C2d-13
PAVLODAR REFINERY
SPECIFICATION LARGE SIZE COKE

PROPERTY	STANDARD MAXIMUM	ACTUAL, 1993		
		APRIL	MAY	JUNE
Moisture, Wt%	3.0	3.47	5.21	8.69
Volitile Matter, Wt%	9.0	7.70	7.54	6.91
Ash, Wt%	0.5	0.26	0.265	0.3067
Sulfur, Wt%	3.00	1.67	1.57	1.433

TABLE V C2d-14
PAVLODAR REFINERY
SULFUR SPECIFICATIONS

PROPERTY	STANDARD		ACTUAL, 1993	
	MIN.	MAX.	MAY	JUNE
Sulfur, Wt%	99.98	---	99.990	99.990
Ash, Wt%	---	0.02	0.0079	0.0068
Acids, Wt%	---	0.0015	0.000780	0.000620
Organic Products, Wt%	---	0.01	0.001	0.003
Water, Wt%	---	0.2	0.03	0.01

3. Utility Services and Off Sites

a. Utility Consumption, including Chemicals & Catalysts

Utility consumption by process unit, for the year 1992 is shown in Tables V C3a-1, 2 and 3 include data relating to chemical and catalyst consumption and general catalyst data.

b. Fuel System

Fuel gas specifications are shown in Table V C3b-1. Unrecovered gas flows to flare, estimated at 900 cubic meters per hour. Furnace burners in the combination unit are, capable of using both fuel gas and oil. The crude atmospheric unit burns a mixture of approximately 50 percent gas, 50 percent fuel oil. The heavy oil unit is designed for 100 percent gas, but normaqlly runs a 70 percent/30 percent gas/oil mixture. The calcined coking and sulfur units use only fuel gas.

c. Steam System

i. Steam Generation, Balance and Utilization

The refinery does not have a power station. Steam is both purchased from the district power station and generated in the refineries in waste heat boilers. About 70 percent of the 280 to 300 mt/hour of 12 kg/cm^2 steam demand is purchased from the district power station, and 90-100 mt/hour of steam is obtained

from the waste heat units. Also, 25 mt/hour of 40 kg/cm^2 is purchased. The district power station also supplies the refinery with up to 200 mt/hour of chemically treated water for the waste heat boilers and the H_2 plant.

TABLE V C3a-1
PAVLODAR REFINERY
UTILITIES CONSUMPTION IN 1992

	COOLING WATER THOUSAND CUBIC METERS	FUEL METRIC TONNES		ELECTRICITY THOUSAND KWH	STEAM, Gcal	AIR THOUSAND NORMAL CUBIC METERS	INERT GAS THOUSAND NORMAL CUBIC METERS
		FUEL OIL	FUEL GAS				
Atmospheric Distillation	5 859.3	42 385	71 174	53 040	146 730	1 277	---
Catalytic Reforming	21 459.0	34 047	26 465	24 325	228 968	9 022	39
Diesel Hydrodesulfurization	2 479.5	13 503	10 651	13 594	45 323	13 925	60
Kerosene Hydrodesulfurization	573.8	2 750	2 785	6 602	7 841	4 128	65
Gas Fractionation Unit	5 015.6	---	---	7 755	128 970	7 815	281
Vacuum Distillation Unit	2 382.4	8 678	19 276	8 392	84 270	6 951	---
Visbreaker	752.6	3 193	12 804	4 926	15 402	2 465	---
Vacuum Gas Oil Hydrodesulfurization	1 767.7	---	15 341	26 341	42 441	26 843	163
FCC	3 351.2	Coke	50 010	48 642	78 883	4 158	13
Gas Concentration	3 080.8	---	---	32 725	12 004	3 758	16
Hydrogen Unit	6 343.1	---	14 685	14 666	83 001	1 385	718
Bitumen	5 646.0	7 095	9 270	15 255	70 011	14 816	---
Delayed Coking Unit	5 684.6	---	23 738	16 820	76 654	9 011	---
Calcined Coking Unit	15.9	---	3 662	2 874	4 206	515	---
Sulfur Unit	2 228.5	---	2 564	2 240	51 445	4 104	137
TOTAL	66 640	111 651	262 425	278 197	1 076 149	110 173	1 492

TABLE V C3a-2
PAVLODAR REFINERY
NAMES AND MONTHLY (AVERAGE) CONSUMPTION QUANTITIES[1]
OF VARIOUS CHEMICAL AND CATALYSTS

DESCRIPTION	MONTHLY CONSUMPTION MT/MONTH
Calcined Soda (Atm. Dist. Unit)	6.8
Caustic Soda - 100% (Atm. Dist. Unit, Atm. Vacuum Unit)	13.5
De-Emulsifier (Atm. Dist. Unit)	10.2
Corrosion Inhibitor (Atm. Dist. Unit)	1.7
Dichloroethane (Cat. Reformer)	0.3
Ethyl mercaptan (Cat. Reformer)	0.02
MEA (100%)	15.9
Activated Carbon (H_2 Unit)	0.1
Borax	0.3
Potash (H_2 Unit)	2.4
Va_2O_5 (H_2 Unit)	0.02
Antioxidant Addition (Gasoline Blending)	19
Naphthenic Acids (For Jet Fuel)	2.3
Jet Fuel Additives	0.3
Aluminum Sulfate (Waste Treatment)	65
Polyacrylamide (Waste Treatment)	1.5
Double Superphosphate	1.1

[1]Based on a crude oil throughput of 7.5 million metric tonnes per year.

7.62

TABLE V C3a-3
PAVLODAR REFINERY
CATALYSTS

CATALYST TYPE	WHERE	CHARGE, MT	CATALYST LIFE YEARS
GP-534	Diesel Oil HDS[1] Unit	45	5
GKD-202N	Catalytic Reformer (Pre HDS Gasoline)	44	5
GKD-202	Kerosene HDS Unit	8.5	5
AP-64	Catalytic Reformer Unit	43	5.5
KR-108	---	40 (R-204)	7
DA-250 or MAG-360	FCC	700	Continuous
GP-534	VGO-HDS[2]	40	4
KNG-1	Hydrogen Unit	20	2
D-49	Hydrogen Unit	30	2
CTK-1-5	Hydrogen Unit	15	3
NKM-1	Hydrogen Unit	7	2
NTK-4	Hydrogen Unit	22	2
GGV	Hydrogen Unit	5	2
TOK-2	Sulfur Unit	24	3
Zeolite Nax	Catalytic Reformer	35	4
Zeolite Nax	Air Drying	0.4	1

[1]HDS-Hydrodesulfurizer
[2]VGO-Vacuum Gas Oil

TABLE V C3b-1
PAVLODAR REFINERY
1992 FUEL GAS SPECIFICATIONS

	UNITS	STANDARD	1992 ACTUAL
ATMOSPHERIC DISTILLATION UNIT			
C_1	Wt%	No Standard	12.46
C_2	Wt%	No Standard	7.69
C_3	Wt%	Not more than 25	19.10
iC_4	Wt%	No Standard	11.11
nC_4	Wt%	No Standard	17.08
iC_5	Wt%	No Standard	5.47
nC_5	Wt%	No Standard	5.05
ΣC_6+	Wt%	No Standard	0.08
H_2	Wt%	No Standard	18.51
O_2	Wt%	No Standard	0.61
N_2	Wt%	No Standard	2.84
H_2S	Vol%	0.002	0.008

TABLE V C3b-1
PAVLODAR REFINERY
1992 FUEL GAS SPECIFICATIONS (CONT.)

	UNITS	STANDARD	1992 ACTUAL
CATALYTIC REFORMER			
C_1	Wt%	No Standard	13.72
C_2	Wt%	No Standard	13.91
C_3	Wt%	No Standard	18.21
iC_4	Wt%	No Standard	4.02
nC_4	Wt%	No Standard	3.12
iC_5	Wt%	No Standard	0.75
nC_5	Wt%	No Standard	0.57
ΣC_6+	Wt%	No Standard	0.01
ΣC_3+C_4	Wt%	Not more than 30	25.35
H_2	Wt%	No Standard	43.05
O_2	Wt%	No Standard	0.35
N_2	Wt%	No Standard	1.69
H_2S	Vol%	Not more than 0.002	0.0014
Heat of Combustion	KJ/kg	47 280	---

TABLE V C3b-1
PAVLODAR REFINERY
1992 FUEL GAS SPECIFICATIONS (CONT.)

	UNITS	STANDARD	1992 ACTUAL
VACUUM DISTILLATION UNIT			
C_1	Wt%	No Standard	21.73
C_2H_4	Wt%	No Standard	8.63
C_2	Wt%	No Standard	8.74
C_3H_6	Wt%	No Standard	10.51
C_3	Wt%	No Standard	5.94
iC_4	Wt%	No Standard	1.25
nC_4	Wt%	No Standard	0.89
iC_5	Wt%	No Standard	1.61
nC_5	Wt%	No Standard	0.82
$\Sigma = C_4$	Wt%	No Standard	0.79
CO_2	Wt%	No Standard	0.99
H_2	Wt%	No Standard	28.11
O_2	Wt%	No Standard	0.03
N_2	Wt%	No Standard	8.60
H_2S	Vol%	Not more than 0.002	1.36%

TABLE V C3b-1
PAVLODAR REFINERY
1992 FUEL GAS SPECIFICATIONS (CONT.)

	UNITS	STANDARD	1992 ACTUAL
BITUMEN UNIT			
C_1	Wt%	No Standard	20.67
C_2H_4	Wt%	No Standard	1.11
C_2	Wt%	No Standard	8.56
C_3	Wt%	No Standard	10.15
C_3H_6	Wt%	No Standard	1.97
iC_4	Wt%	No Standard	2.47
nC_4	Wt%	No Standard	2.53
iC_5	Wt%	No Standard	0.80
nC_5	Wt%	No Standard	0.78
$\Sigma = C_4$	Wt%	No Standard	1.79
ΣC_5+	Wt%	No Standard	0.12
CO_2	Wt%	No Standard	0.33
H_2	Wt%	No Standard	44.03
O_2	Wt%	No Standard	0.19
N_2	Wt%	No Standard	3.98
H_2S	Vol%	Not more than 0.002	0.52

TABLE V C3b-1
PAVLODAR REFINERY
1992 FUEL GAS SPECIFICATIONS (CONT.)

	UNITS	STANDARD	1992 ACTUAL
DELAYED COKING UNIT			
C_1	Wt%	No Standard	32.25
C_2H_4	Wt%	No Standard	3.90
C_2	Wt%	No Standard	11.80
C_3	Wt%	No Standard	19.11
C_3H_6	Wt%	No Standard	6.73
iC_4	Wt%	No Standard	1.20
nC_4	Wt%	No Standard	6.67
Σ-C_4	Wt%	No Standard	4.30
ΣC_5+	Wt%	No Standard	2.80
CO_5	Wt%	No Standard	2.20
H_2	Wt%	No Standard	5.23
N_2	Wt%	No Standard	0.60
H_2S	Vol%	Not more than 0.002	3.21
Heat of Combustion	KJ/kg	47 300	

ii. Steam Pressure Levels

The refinery uses steam at the following nominal pressures and temperatures:

- 35-40 kg/cm^2 (497-597 psi) @ 380-400°C (716-752°F)
- 12-16 kg/cm^2 (171-228 psi) @ 260-290°C (500-554°F)
- 3-4 kg/cm^2 (43-57 psi) @ 143-152°C (290-306°F)

iii. **Steam Users**

The only user of the 38 kg/cm^2 steam is the 6 000 kW steam turbine driving the reformer unit's recycle gas compressor. The 14 kg/cm^2 steam is used on the process units for stripping steam, reboiler heating media, steam pump drivers, atomizing steam for oil burning, heating heavy product storage and heat tracing. The 4 kg/cm^2 steam is used for building heating, plant hot water heating, steam tracing and heating boiler feed water.

iv. **Condensate System**

There are two plant condensate systems; one for clean condensate and the other for dirty condensate. There are two clean condensate gathering drums and three dirty ones. The condensate from the 6 MW steam turbine comprises a good portion of the clean condensate. The clean condensate is sent to the power station and the dirty condensate is sent to waste water treatment.

The refinery by contract needs to return 33 percent of the condensate back to the power station. At present it is returning 31.5 percent. There is a penalty for each 0.1 percent under the 33 percent of "5 x" the contract price of condensate.

Boiler blow down is both intermittent and continuous. The blowdown goes to a low pressure flash drum with the flashed steam going to the low pressure steam system and the liquid to the waste water treatment system.

No steam traps are used by the refinery. It was reported that traps did exist at one time, however, they didn't work and were removed.

169

v. **Impact of Potential Energy Savings Projects on Steam Balance**

Since the only use of 38 kg/cm^2 steam is the recycle gas compressor, in the combination unit's reformer section, no change in this steam system's demand (not related to unit feed) can be expected. Installation of combustion controls on furnaces will reduce excess air and result in less flue gas. It can be expected that waste heat steam generation will decrease by about a third of the gross heat savings. Other heat savings that reduce fuel fired in furnaces equipped with waste heat boilers, will see the same one-third gross heat savings reduction in waste heat generation.

Insulation heat savings will decrease the amount of refinery steam used by lowering the heat losses in steam lines, reboilers and vessels using steam as a heating media. The savings should show-up as a decrease in steam purchases. The refinery balances its steam system by purchasing steam and by desuperheating. Waste steam heat is now being made at Pavlodar in most of the areas where it is economically practical. The increasing cost of fuel will change the present equations and make the recovery of low level heat more feasible. This will be accomplished mostly by combustion air pre-heating or generation of low level steam.

d. **Electric Power Systems**

i. **Electricity Sources and Generation**

No power is generated in the refinery. Two 110 kV overhead transmission lines are brought to the refinery's service entrance substation. One of the 110 kV feeders comes from the local power district's two generation stations. The other 110 kV feeder comes from the state power grid. One of the district power stations is located across the road from a corner of the refinery.

During our visit, the refinery was drawing about 29 MW. Its usual draw is about 40 MW. Demand charge is based on 50 MW. Power factor is 0.89. Present power costs are 24 rubles per kW-hr. At 3 000 what was then rubles to the dollar, the equivalent dollar cost was $0.008/kW-hr. The refinery's power costs were about 900 million rubles per month or US $300 000.

ii. Electric Distributing System

The 110 kV switching equipment for the refinery service entrance is outdoor utility-type equipment installed in a fenced-in area at the refinery's service entrance substation. Each 110 kV feeder is brought through a disconnect switch and lightning arrester to a 40 MVA 110 kV/6.3, 6.3 oil insulated transformer. Each of the transformer's secondary winding feed one side of two 6 kV split-buses. Both split buses have tie breakers.

The service entrance substation (GPP) is a simple one story concrete building. The split 6 kV buses are composed of Polish manufactured 6 kV switchgear. The busbar is aluminum and the breakers are metal clad, high pressure air break with arc chutes and are withdrawable. The feed from the service entrance transformer's secondary windings is cabled to a reactor and then to a section of one of the two split-buses. A graphic of the service entrance to the split-bus is drawn on three switchgear sections with breaker switches and indicator lights in the graphic along with pertinent meters. The switching and metering equipment for the substation is also in the switchgear lineup.

Feeders from the two 6 kV split-buses are run to 22 main substation split buses. These split buses are all equipped with tie breakers. Adding to the refinery's flexibility in the refinery's distribution system (and complexity) is a separate substation (TZTS-3) with three independent sets of buses. Each of these independent buses are fed from the GPP. These buses in turn provide feeders to some of the main substations. The major substations have two sets of feeders to each split-bus side.

The typical unit substation is a two story building, force ventilated from 15 meter high stacks and located just outside a unit's battery limits. The first floor contains the 6 kV split-bus with service entrance, metering and relaying equipment and breakers. Also, on the first floor in concrete vaults with outside metal doors are the 6 kV/380 volt transformers. On the second floor is the 380 volt metal clad drawout type switchgear and the 220 volt (phase-to-ground of a 380 volt center grounded wye) lighting switchgear. Most of this metal clad switchgear is of Polish manufacture.

The refinery is fairly well into a program of installing overhead racks for future overhead cable installation.

iii. **Electric Power Users**

Most of the refinery's electrical energy is used to power electrical motors. Other users of electric power are: the electric desalters, lighting, welding equipment, regenerating the instrument air dryers and electronic equipment.

The largest refinery motors are the three 4 000 kW motors driving the regeneration air blowers on the FCC. All three of the blower drivers have series reactors in their starting circuits to limit starting current.

e. **Other Utilities**

The other utilities furnished in the refinery are: plant air, instrument air, cooling water, drinking water, demineralized water, hot water and nitrogen.

4. Environmental Considerations

a. **Fresh Water Supply**

The refinery has four sources of water:

(1) Two on-site wells
(2) City of Pavlodar water system
(3) The Irtysh River
(4) Treated wastewater is recycled for cooling tower make-up.

The two on-site wells are approximately 430 meters deep. They are protected and constructed in a sanitary manner. The wells provide 25 percent of the sanitary water requirements for the refinery. No chemical/physical water treatment is required before mixing the well water with the City of Pavlodar drinking water.

It was not known what treatment, other than chlorination, the City of Pavlodar provides for the water distribution system.

The Irtysh River is used as the source of process water and make-up water for the cooling tower.

TABLE IV C4-a
WATER QUALITY

ANALYSIS mg/l	ON-SITE WELL	IRTYSH RIVER		CITY SUPPLY
		SPRING	WINTER	
Smell	None			
pH (Units)	8	7.3	8.4	6.7-7.1
COD	1.4	2	5	114-1.9
Hardness	120	60	95	60-95
Alkalinity	370	---	---	---
Total Solids	1 450	---	---	---
Ca^{++}	36	---	---	---
Mg^{++}	7	---	---	---
Fe (Total)	0.45	0.04	0.3	0.08
Cl^-	2.66	5	9	---
$SO_4^=$	4.56	12	31	25-53
Fl^-	0.6	---	---	---
Mn^{++}	0.08	---	---	---
Nitrogen NH_4	0.95	0.05	0.11	---
NO_2	<0.1	---	0.03	0.013-0.017
NO_3	<0.003	0.44	2.87	0.35-2.5
Coliform per 100ml	<3	---	---	---
Suspended Solids	---	300	12	None Detected
BOD	---	1	24	1-2.4
Oil	---	0.002	0.006	None Detected

(---) = Not Reported
The city and on-site well water is disinfected by use of ultraviolet lights.

b. Water Treatment and Distribution

The combined sanitary water, city and well water, is mixed and is treated by an ultraviolet light disinfection unit. The disinfected water is pumped through the refinery to the various points of use.

The Irtysh River water is used untreated as cooling tower make-up. The river is always fed to the cooling tower sump that cools the gas and air compressor systems, Loop 2-A. The river water can also be used, during emergency conditions, when the flow of treated refinery wastewater is insufficient to satisfy the make-up requirements of the other cooling tower loops, Loop 1 and Loop 2. See Table IV-C-4-a, for water quality.

The refinery wastewater is collected in two separate sewer systems. System I collects the wastewater from general washdown rainfall and tank bottom water. System II collects the wastewater from desalter, sour water stripper, rail car loading area, and the tank car washing operation.

The two sewers terminate at separate wastewater treatment plants (WWTP). The two WWTP's have the same basic treatment units, but the size or number are different.

The WWTP's consist of:

- Sand Traps
- Oil Traps
- Intermediate Settlers
- Dissolved Air Floatation Units
- Activated Sludge Aeration Units
- Secondary Clarifiers
- Emergency Holding Ponds
- A Sludge Lagoon

The two WWTP's share a common set of heated aboveground steel tanks used for skimmed oil/water separation. The oil is returned to the crude unit, the water to the WWTP inlet and any sandy bottoms is routed to a sludge lagoon.

The effluent from the secondary clarifier of System I is filtered in a pressurized mechanical filter before being recycled for cooling tower make-up. Excess flow is routed to a holding pond.

The effluent from the secondary clarifier of System II is routed to the holding pond. The excess water in the holding pond flows to Lake Sarymsak, 15 kilometers away. The closest residence to the lake is 3 kilometers. The refinery is currently under orders to use 500 cubic meters per day of the 600-630 cubic meters per day flow to the lake.

See Table IV C4b-1 for the wastewater quality at selected points and Table IV C4b-2 for the current water quality of Lake Sarymsak.

TABLE IV C4b-1
WASTEWATER QUALITY

ANALYSIS mg/l	RAW		CIRCULAR SETTLER		FLOATATION		EFFLUENT		
	I	II	I	II	I	II	I	II	III
Oil	10 200	38 900	20	17.5	22	26	NO DATA	15	10
Chemical Oxygen Demand	---	---	204	178	200	326		170	170
Bio Oxygen Demand (5)	---	---	108	92	105	151		100	91
Bio Oxygen Demand (20)	---	---	178	190	147	177		138	148
Suspended Solids	62	121	26	25	35	47		20	14
Total Solids	392	445	---	---	344	380		---	344
Hardness	160	180	---	---	162	180		---	165
Alkalinity	185	185	---	---	175	185		---	150
Cl^-	194	115	---	---	90	50		---	75
SO_4^{--}	97	122	---	---	70	80		---	88
Mg^+	40	39	19	60	40	32		65	38
NO_2^-	0.01	0.005	0.03	0.05	0.0006	0.0003		0.003	0.003
NO_3^{--}	0.24	0.22	0.16	0.17	0.16	0.14		0.3	0.16
Phenol	7.2	9.3	---	---	5.3	8.13		---	0.17
H_2S	0	0.2	---	---	---			---	---

(---) = Not Reported

TABLE IV C4b-2
LAKE SARYMSAK QUALITY

ANALYSIS	CANAL	OPPOSITE INLET	LEFT BANK	RIGHT BANK
pH	8.55	8.9	8.6	8.9
Oil, mg/l	---	2.0	2.5	2.0
Ammonia, mg/l	52	6.8	7.0	7.1
Nitrites, mg/l	0.02	0.06	0.05	0.05
Nitrates, mg/l	0.16	0.26	0.21	0.22
Phosphates, mg/l Total	0.06	0.08	0.02	0.06
Sulfides, mg/l	225	550	525	575
Chlorides, mg/l	106	195	195	198
Alkalinity, mg/l as $CaCO_3$	155	90	90	95
Hardness, mg/l as $CaCO_3$	180	320	325	322
Dissolved Solids, mg/l	605	1018	918	1092
Suspended Solids, mg/l	36	11	9	9
Chemical Oxygen Demand, mg/l	456	120	152	120
Dissolved Oxygen, mg/l	ND	7.9	5.3	9.4
Phenols, mg/l	0.4	ND	ND	ND
Biochemical Oxygen Demand, (5 day) mg/l	180	14	18	16
Biochemical Demand, (20 day) mg/l	230	18	24	24
Hydrogen Sulfide, mg/l	ND	ND	ND	ND

(---) = Not Tested
ND = Not Detected
Analysis for sample collected June 3, 1993.

c. **Cooling Towers**

The refinery has three cooling tower loops. Loop 1 serves the sulfur plant, coker and calciner, Loop 2 serves the technical process units and Loop 2A serves the gas and air compressor units.

The hot side oil traps are concrete covered and had a minimum of floating oil. The siding and fan units look well maintained. The pump room was well maintained.

The make-up water for Loops 1 and 2 come from multiple sources. The priority of use is:

(1) treated effluent
(2) river water and
(3) drinking water

Loop 2A was provided with river water or condensate.

The blowdown is diverted to Wastewater System II. See Table IV C4-c for water quality data.

TABLE IV C4-c
COOLING TOWER WATER QUALITY
(mg/l)

WATER	pH	OIL	COD	SS	TDS	Cl^-	$SO_4^=$	HARDNESS		$\frac{Fe^{++}}{Fe^{+++}}$
								PERM.	TOTAL	
Cooling Tower System I	7.8	9.5	---	21	362	14	82	150	152	0.4
Cooling Tower System II	7.9	14.5	---	19	374	11	78	155	160	0.25
Cooling Tower System IIA	7.8	Trace	---	5	154	14	33	122	138	---
Fresh Water Make-Up	8	ND	---	1.4	100	14	22	70	88	0.5
Treated Wastewater Make-up	7.8	23	204	26	386	25	80	158	160	0.15

(---) = No Data
ND = Not Detected

-18

d. Tank Farm

The tank farm consists of 69 aboveground steel storage tanks and 28 compressed gas storage bullets. The four crude storage tanks have uninsulated floating roofs. The 25 gasoline or intermediate gasoline tanks are equipped with conservation valves but not floating roofs. See Table IV C4-d.

TABLE IV C4-d
TANK FARM

PRODUCT	NUMBER	DIAMETER (METERS)	HEIGHT (METERS)	TOTAL VOLUME (CUBIC METERS)	ROOF FLOAT/FIX
Crude	4	60.7	18	200 000	Float
Gasoline	4 6	34 45.6	12 12	40 000 120 000	Fixed Conservation Type Valve
Gasoline, Intermediate	3 6 6			6 000 18 000 6 000	
Diesel, Intermediate	4 3	45.6	12	80 000 6 000	Fixed Fixed
Kerosine, Intermed.	4 2	45.6	12	80 000 4 000	Fixed Fixed
Fuel Oil	2 3	 45.6	 12	20 000 60 000	Fixed Fixed
Mazut	2	45.6	12	40 000	Fixed
VGO	1			5 000	Fixed
Bitumen/ Road	10			4 000	Fixed
Bitumen/ Construction	3			1 200	Fixed
Bitumen/ Roofing	4			2 300	Fixed
Bitumen/ Roofing	2			800	Fixed
Compression Gas	22 6			4 400 3 600	Fixed

Estimated Volatile Organic Loss 14 357 mta

All of the tanks except the compressed gasses, are within containment dikes. Most of the dikes are concrete and are designed to hold the largest tank volume within the dike.

There is no vent collection system.

e. Environmental Considerations

The refinery is working to minimize their impact upon the water environment. By selectively blending the city supply, the untreated river water and the deep well water an acceptable chemistry is achieved with a minimal use of the fresh water.

Also, to protect the ground water from contamination, the refinery is doing three specific things. First, they have constructed an underdrain system under a portion of the wastewater treatment plant and the coking area. The underdrain water is collected and pumped to the WWTP.

Secondly, the plant has installed 19 ground water sampling wells. The wells are 5 to 32 meters deep. The wells are sampled on a scheduled basis and if pollution is found the wells are pumped with the water being routed to the WWTP.

The third activity involves the sludge pits. The sludge is removed each year, processed to remove much of the oil content before using the sand. The oily sludge is pumped from the sludge lagoons through an emulsifying centrifuge. The frothy oil is routed to the mazut storage tank and the cleaned wet sand is stored until dry. The dry sand is used for construction. A rotary drier was planned but funds ran out before it could be built. The refinery people do not know if it will ever be built. By using this sludge cleaning system, the amount of oily sludge stored in the open pits is minimized.

See Table IV C4e-1 and IV C4e-2 for water quality of the ground water and underdrain water.

To date, little effort has been made to control the air pollution emissions.

TABLE IV C4e-1
GROUND WATER SAMPLE WELLS

ANALYSIS	LOW	HIGH	COMMENTS
pH	7.2	9.65	
Oil, mg/l	None Detected	2	one @ 6.8
Cl^-, mg/l	100	2 500	one @ 49
$SO_4^{=}$, mg/l	70	5 200	
Hardness, mg/l	145	2 500	
Phenol, mg/l	None Detected	None Detected	
COD, mg/l	4	48	one @ 272
Total Dissolved Solids, mg/l	360	6 000	one @ 30 000
Depth, meters	5	32	

There are 19 wells being used for periodic sampling. The locations and depths were determined by the process unit potential of loss product and the geological conditions.

TABLE IV C4e-2
UNDERDRAIN WATER QUALITY

LOCATION OF UNDERDRAIN	OIL	COD	BOD		DISSOLVED SOLIDS	CL^-	$SO^{=}_4$	ALKALINITY	HARDNESS	pH
			5	20						
Pumps at Bio-Unit	197	314	57	106	340	22	93	207	186	8.2
Activated Sludge Tanks	6.5	66	16	27	749	65	171	373	333	8.5
Coke Plant	ND	28	4	8	690	54	207	284	216	8.6

All measurements in mg/l except pH.
ND = None detected.

f. Quality of Local Environment

The geology and weather have a predominate impact on the environment. The total annual precipitation is reported to be 0.352 meters. Most of the precipitation falls in April, May and September. The low precipitation and unequal distribution lead to excessive dust particles becoming wind blown.

The second major impact is the District Power Plant which burns a high ash coal (Approx. 50 percent) and a high sulfur (1 - 8 percent) content. The power plant uses a flooded low energy venturi for both particulate and SO_2 scrubbing. The venturi flooding water is a mixture of lime and water. The typical particulate removal efficiency for a low energy venturi is between 30 and 50 percent. The efficiency of SO_2 removal is also low, approximately 25-40 percent.

Another major source of air pollution is a local cement manufacturing plant. It was not known what fuel is fired at the cement plant.

No data was available of the actual environmental quality.

g. Current Emission Controls

The only emission controls are the two wastewater treatment plants and the sludge oil removal system. Both of these units are used for the recovery of product or recycling of water.

h. Recommendations

Recommendations that require little or no capital investments:

- Increase the frequency of oil skimming at the intermediate settlers.
- Optimize the operation of the dissolved air flotation system (DAF).

Recommendations that require a moderate amount of investment:

- Establish an employee environmental education program.
- Determine the source of the excess wastewater flows.
- Survey the valves, flanges and vents for hydrocarbon loss.

Recommendations that require significant capital expenditure:

- Install combustion controls on the process heaters.
- Revamp the oil traps.
- Install a hydrocarbon vapor control system.
- Separate the salty wastewater from oily wastewater.
- Install additional desulfurizing capacity.

During the walk through it was noted that an excessive amount of oil was being discharged in the final effluent. The amount of oil removed in the wastewater treatment plant can be improved by more frequent removal of oil from the intermediate settler. This would minimize the amount of oil that gets dragged under the oil baffle. A discrete oil sheen was noted at the effluent of the settler, indicating oil carry over. Reducing the thickness of the accumulated oil layer by more frequent oil skimming will reduce the carry over.

It was also observed the DAF was not producing sufficient floc for the removal of oil. This was confirmed by the oil concentration noted in the lab reports. Time and instrumentation was not available to determine if the pH was proper, if the concentration of flocculent was high enough or if the proper amount of air is being added. Therefore, a treatability study needs to be conducted to determine the optimum pH for the emulsion breaking and floc formation.

The lack of a significant bubble cloud indicated a deficiency of the DAF. Additional dissolved air must be introduced. This can be accomplished by increasing the systems air pressure and volume of compressed air supplied to the dissolution tank.

Many western refineries attribute a significant pollution reduction to introducing an ongoing education program. The education program must be designed to overcome the attitude that pollution control is the responsibility of just certain persons or departments. The program must teach the management and operating staff that they are all responsible for minimizing the amount of pollutant being released. This responsibility is enforced by such measures as administrative punishment of having knowledge of a pollution discharge without taking corrective action. The punishment may be suspension or termination. Willfully causing a release of pollutants can also result in refinery closure and/or severe monetary fine. In addition, education programs typically reward efforts that stop pollution losses or recommend changes which can minimize future losses. It is recommended that an education program be implemented that would motivate each employee to recognize what pollution releases are, what damage they can cause, and what they can do to help minimize the pollution releases.

To monitor the education programs progress, it is necessary to have a base line pollution control survey. It is necessary to know specifically how much pollution comes from each process block and which piece of equipment or unit is causing the major loss of product. With this data, everyone will know where the losses are, how much is being lost and what can be done to minimize the loss. Therefore, it is recommended an investigation and sampling program be undertaken to collect sewer flow data and pollution levels for all of the process blocks. With this wastewater flow balance and pollution loading, the improvements in

either water flow or loss of product can be measured. Also an equipment replacement or revamp schedule can be developed.

The air pollution released can be reduced by replacing leaky valves, gaskets and seals and installing storage and WWTP tank vent collector systems. It is necessary to determine an order or priority for future repair/replacement work. To do this an organic vapor analyzer (OVA) can be used to sniff all potential sources, valve stems, flanges, seals and vents. With the data collected a schedule of repair/replacement can be developed. Of course, if a bad leak is noted during the survey, it should be fixed immediately. The sniffing should be conducted every three or four months until all sources have been repaired/replaced.

Because of the large number of small sources and the recommended frequency of inspection, it is recommended that a Personal Computer and a program with spread sheet capability, be made available to environmental personnel. Data from the wastewater survey can also be entered into the PC for data and program control. As the sampling program is repeated over the years, the progress can be tracked and time comparisons can be easily and economically performed.

The following recommendations require a more significant expenditure of capital:

- The process heaters are currently operating without continuous control of the combustion air. As the fuel value or firing rate change, there is no auto adjustment to the amount of combustion air at the burners. This causes inefficient combustion and may allow excessive emission of carbon monoxide, unburned hydrocarbons, or nitrogen oxides. An oxygen analyzer and automatic inlet air valve should be installed to automatically control the amount of air allowed in the heating zone. The product exit temperature should automatically control the fuel firing rate. These automatic controls will improve the fuel efficiency and reduce and limit the amount of carbon monoxide, nitrogen oxide and un-burned hydrocarbons.

- The existing oil traps, both System I and System II, do not function as an oil trap. They should be replaced with a Western API type design separator. Automatic operating control should be provided to maximize the removal of both the floatables and sludges. The automatic API type system will significantly reduce the oil load to the intermediate settler. This also will lower the oil load to the DAF and activated sludge units. If funds are not available for a new API Separator, the oil traps should at least be revamped with new oil skimming and oil skimming pumping devices.

- The next recommendation concerns reducing the amount of hydrocarbons released from the refinery. Based upon the VOC sniffing program, above, a schedule of repair, replacement or collection can be developed. It is not possible to say now which activity should be done first. The result of the sniffing will show which emit the most and should be fixed first.

- For the valves, a simple replacement of the seal material may be satisfactory. Some cases may require an upgrade in the seal material. Others may require complete replacement of the valve.

- The vents on storage tanks and the covers of the wastewater treatment plant may require a vent collection system and either a vapor combustion or an absorption unit. The tanks used for product storage could use a vapor balancing line to/from the tank/railroad car or tank truck. This vapor balancing would eliminate a part of the excess VOC's lost. Also, a vent collection system could interconnect tanks of the same product. The vent collection system would terminate at a vapor recovery or incineration device.

- The revamped sand and oil traps (or new API) need to be equipped with a vent control similar to the product storage tank vent control system.

The Almaty Institute of Health Tasks for 2005, set forth goals of reducing the salt content in Lake Sarymsak and the refinery reuse of 500 cubic meters of water per day. To accomplish this requires the separation and collection of all salt waters. The prime candidates are the desalter water, cooling tower blowdown and wasteheat boiler blowdown. The process wastewater survey previously discussed will identify what process units must be collected and treated separately.

When the flows are identified, the quantity and quality determined, the methods of treatment can be determined. Options available are; a separate evaporation lagoon, heat evaporating/condensing or a reverse osmosis membrane system. The system must be evaluated as to cost, capital/operation, need of the fresh water and final salts disposal.

With respect to refining process recommendation which could improve the environment by reducing the air, water or solid waste release, a major processing suggestion would be to reduce the sulfur content in all of the products. This recommendation must be in conjunction with a country wide program of sulfur dioxide reduction and not a refinery specific action.

i. Summary of Environmental Survey

i. Refinery Sulfur Balance

The refinery is equipped with an operating Claus Sulfur Plant, at 20 000 mta capacity. The design basis was a crude with 1.5 percent sulfur content. Today they process 0.5 percent sulfur crude. The plant is over sized for the amount of sulfur being removed. In 1992 of the 37 322 mt of sulfur arriving in the crude, only 7 372 mt were recovered, 24 188 mt are in the coke and product with the balance being emitted to the atmosphere.

See Table IV C4i-1

TABLE IV C4i-1
SULFUR BALANCES

ITEM	1992 SULFUR, MT
Crude in @ 0.58% Sulfur x 6 434 800 Metric Tonnes	37 322
In Products	22 281
Process Heater	5 610
Coke	1 907
Sulfur Recovered	7 372
Miscellaneous	152
Sulfur Out	37 322

ii. Air Emissions

The refinery maintains two air monitoring systems, (1) employee exposure, especially in welding or closed areas and (2) ambient air in both the refinery and off-site. The ambient monitoring is for hydrocarbons, hydrogen sulfide, carbon monoxide, benzene and toluene. Data show there are a few occasions when the ambient level exceeds the standards. When this occurs, a concerted effort is made to identity the cause and correct the release.

It was reported that the District Sanitary Inspector has not established any fines for the few violations the refinery had.

See Table IV C4i-2 for the estimated emissions.

TABLE IV C4i-2
AIR EMISSIONS

COMPOUNDS	ESTIMATED EMISSIONS MTA	TOTALS
Hydrocarbons	13 732	
Benzene	128	
Toluene	212	
Xylene	279	
Phenols	6	
SUB-TOTAL VOLATILE ORGANICS		14 357 MTA
Carbon Monoxide	905	
Sulfur Dioxides	12 452	
Nitrogen Oxides	638	
Hydrogen Sulfide	10	
SUB-TOTAL		14 005 MTA
Particulate -		
Vanadium	8	
FCC Dust	459	
Other	66	
SUB-TOTAL ALL DUST		533 MTA
TOTAL EMISSION		28 895 MTA

iii. Water Quality

The water quality of the City and Irtysh River supply is quite satisfactory for refinery use. The mixing of the on-site deep well water for drinking supply is acceptable except when the mixture is used for cooling tower make-up. The high hardness and dissolved salts of the on-site well water can cause operational problems.

The quality of the treated wastewater for reuse is unacceptable for System I due to the high salt content and marginal for System II because of the moderately high salts and high oxygen demand.

The high oxygen demand at present is due to the ineffective wastewater treatment plant operations.

The requirements that by 2005 some of the water from Lake Sarymsak must be used will have both good and bad impacts upon the water quality. The biological oxygen demand will be lower because of the continued pollution treatment in the lake. However, the hardness and salts content will be higher than the use of only System II effluent.

Pre-treatment for the combined lake water may be required to reduce the operational problems. Treatment such as softening, flocculation, clarification and filtration should be considered. Reverse osmosis should be investigated but may not prove to be cost effective.

iv. Solid Waste Disposal

By western standards, the storage and decanting of the oil in open lagoons is unacceptable. The refinery is installing additional sludge handling equipment that will minimize the length of time the oily sludge is in the lagoons. The ground water is being monitored to insure that no ground water pollution occurs. Eventually the lagoons should be covered or replaced to minimize the amount of organic material evaporating from the lagoons.

The catalytic cracker catalysts are collected from the cyclones and electro-static precipitator and shipped with other spent catalysts to a metals recovery plants.

v. Impact of Maintenance Practices on Generating Emulsions

The lack of sufficient funds for preventative maintenance impacts upon the environmental control in two adverse ways. The first is at the process block; the lack of preventative maintenance causes an excessive amount of product to be lost to the wastewater sewer. The second is the lack of preventative maintenance at the overloaded wastewater treatment plant prevents the equipment from performing at design capabilities. In order to meet western standards of operation, systems must be upgraded or replaced and the oil sludge handling equipment will have to be replaced.

vi. Non-Aqueous Evaporation Loss

The refinery does not currently have access to newer valves, seals and flanges that are designed to prevent hydrocarbon loss. During the walk through numerous valves, seals or flanges showed evidence of product loss.

The vent system for the light product storage and loading needs to be improved. A vent collection and treatment/recovery system could be installed. As a minimum a vent equalization system between the storage tanks and the railroad tank car or truck loading should be considered.

v. **Loss of Product to Solvents**

No large solvent system on site.

j. **Handling of Material**

i. **Tetraethyl Lead (TEL)**

The use of TEL was discontinued in 1991.

ii. **Aromatics**

No special processes to remove or systems to provide any control of aromatics were observed.

iii. **Solvents**

It was reported that the refinery did not use any process that used a significant quantity of solvents; small quantities are used in the repair shops.

iv. **Halogenated Hydrocarbons**

The only process chlorinated hydrocarbon noted is the use of trichlorethylene (TCE) for chloride activation of the catalyst. The TCE storage, mixing and feeding system was not observed. The TCE is received in drums.

v. **Heavy Metals**

The refinery does not analyze or track heavy metals.

vi. **Sulfur**

The liquid sulfur is pumped to a railroad tank car or to a concrete above ground slab to allow it to harden and be scooped to one end for dry storage.

The raw sulfur is shipped to a sulfuric acid plant or to an agricultural chemical manufacturer. It was reported the refinery does not have any problem selling the sulfur.

vii. **Sulfuric and Hydrofluoric Acids**

The refinery does not use a significant quantity of any acid. The chemical unloading areas, bulk shipment and drums were visited. The unloading areas are curbed and drained to containment sumps. The storage tanks are insulated and heated and located within containment dikes.

viii. **Combustion Products**

The process heaters are not equipped with any stack gas analyzers and air inlet control valves to optimize the combustion excess air content, therefore there is a potential for excess CO or NO_x.

The heaters normally fire a low sulfur fuel oil/refinery gas mix. The heaters are not equipped with any stack-gas clean-up system for SO_2, NO_x or CO control.

ix. **Tars**

The refinery is equipped with a 5 reactor bitumen plant. They make 3 grades of product - construction, asphalt and roofing or bitumen.

The bitumen is stored in elevated insulated storage tanks sitting on a platform above a railroad siding. The bitumen tank cars are positioned under the storage tanks and filled by gravity.

5. Opportunities for Improvement

The overall goals of the work are to assist in the privatization of the petroleum sector by providing salient information for preliminary investment decisions, and to enhance privatization opportunities by recommending improvements for the existing installations that will increase technical and financial performance.

The work undertaken to meet the goals are part of the USAID NIS Petroleum Refinery Program for Kazakhstan. The purpose of the program is to:

- Identify changes in operating practices and low-cost modifications to equipment that can be immediately implemented to increase the efficiency of energy utilization, conserve energy by avoiding unjustified energy use, and reduce undesirable gaseous, liquid, and solid effluents.

- Identify and characterize more extensive changes in operating and maintenance practices, equipment, and physical modifications to the process units.

a. **Operation Improvement Opportunities**

The recommendations of this study to improve energy utilization and operations (yields, practices, etc.) are categorized in terms of immediate, medium-term, and long-term opportunities.

i. **Immediate Opportunities**

These opportunities require changes in operating conditions with or without nominal equipment modifications, those which appear implementable within the staff resources of a refinery, and at a cost of less than the equivalent of approximately US $100,000. This category covers zero to low cost modifications to the refinery that will be relatively easy to implement. The refinery should be able to execute these modifications with its own internal resources.

ii. **Medium-Term Opportunities**

These opportunities require formal justification, infusion of capital from external sources, and possibly the services of externally obtained experienced resources for implementation.

iii. **Long-Term Opportunities**

These opportunities involve abandonment of major processing units, major modernization (or revamping) of existing units, or the construction of new processing units. The justification would occur through market analyses, rather than technical analyses, of crude supply and product slates.

b. **Energy Improvement Opportunities**

The major energy improvement opportunities were summarized by the Evaluation Team and fall into four major areas: energy conservation, furnace combustion, heat conservation, and steam system improvements.

i. **Energy Conservation Improvement Opportunities**

Implementation of comprehensive energy conservation policies and programs. Economic evaluation of energy conservation programs should be based on world energy prices.

ii. Furnace Combustion Improvement Opportunities

Improvement of furnace combustion efficiencies by:

- Addition of monitoring equipment, e.g. flue gas oxygen analyzers, fuel flow meters, and associated controls.
- Although Pavlodar was quite proficient in this respect, the use of improved waste heat recovery techniques such as additional steam generation, convection section process reboiling, and combustion air preheat, should be re-evaluated in terms of rapidly increasing energy prices.
- Replacement of equipment where necessary, e.g. burners and instrumentation.
- Operator training in efficient furnace firing techniques.

iii. Heat Conservation Improvement Opportunities

Improvement in heat conservation practices focused on the selected upgrade of insulation (repair, replacement, and addition) as warranted.

iv. Steam System Improvement Opportunities

Improvement opportunities in the area of steam system operating efficiencies included:

- Adding steam traps.
- Collecting and reprocessing condensate.
- Considering additional utilization of steam (e.g. steam turbine drivers with admittance/extraction nozzles and steam reboilers).

c. Emissions Control Opportunities

The recommendations of opportunities to improve environmental conditions are categorized into immediate, medium-term, and long-term opportunities.

i. Immediate Opportunities

The immediate emission control opportunities require changes in operating practices with or without nominal equipment replacement, those which appear manifestly in the public interest,

and those which appear implementable within the staff resources of the refinery for the equivalent of approximately U.S. $100 000.

ii. **Medium-Term Opportunities**

The medium-term emission control opportunities require infusion of capital from external sources, possibly the services of externally-obtained experienced personnel for implementation.

iii. **Long-Term Opportunities**

The long-term emission control opportunities are high cost and represent substantial clean-up of accumulated pollution from past neglect.

While a few of the environmental improvements can be implemented quickly, a considerable amount of capital must be invested for the majority of the needed work. The balance of capital investment versus environmental goals and improvements must be considered in the future.

In summary, the potential emission control opportunities include:

- Develop a comprehensive environmental program that stresses:
  - emissions awareness and responsibility.
  - monitoring of specific emissions from the refinery, both air and water.
  - termination of existing emissions to the environment.
- Enhance product desulfurization and refinery sulfur recovery capabilities.
- Improve water treatment operations by:
  - diligent monitoring of water emissions.
  - determined repair and maintenance of existing pollution and control equipment.

d. **Operation and Energy Efficiency Improvements**

Prior to implementation of any refining improvements (either energy efficiency or equipment replacement/revamp), a comprehensive strategic investigation and evaluation of the Pavlodar Refinery long term

operating plans should be conducted. Based on the results of the evaluation, some or all of the following recommendations could be implemented.

The energy efficiency improvement opportunities described is this section are not given in any special order. However, these opportunities are organized in terms of Immediate-, Medium- and Long-Term Opportunities. Cost shown are on a U.S. Golf Coast basis. Many of the potential improvements require the refinery to develop a history of specific causes of unscheduled downtime, and resultant loss of product and profit as a basis for justifying the suggested project.

i. **Immediate Opportunities**

Below is a listing of the Immediate, Minimum Cost Opportunities for energy efficiency or operational improvements. For purposes of classification, Minimum Cost Opportunities will be defined to include expenditures below $ 100 000.00 U.S. Dollars.

a) The Pavlodar refinery must develop and implement comprehensive energy conservation philosophies and policies. A formal program should be established and monitored. We suggest that the refinery raises its consciousness level and sensitivity to the energy costs involved in processing crude oil.

b) Modify the existing program that regularly monitors, calculates, and evaluates product yields and utility consumptions. The program must be designed and operated such that regular energy conserving or product quality adjustments are sanctioned and encouraged. Further, source of losses must be identified and minimized.

c) Launch an extensive equipment insulation program to repair and replace existing insulation in poor condition, supplement existing insulation in good condition (as necessary), and add insulation to currently exposed equipment items based on economics related to world energy prices and heat losses of equipment.

d) Invest in education programs or courses for the following topics:

- Overall fired heater operations, with specific focus on efficiency, proper air/fuel ratios, burner operations, and maintenance.
- Steam trap selection and maintenance.
- Major process equipment inspection and recertification.

- Overall refinery energy efficiency improvement programs.
- Engineering design and operations course.

e) Audit the steam generation, distribution, utilization, and condensate return equipment and balances in detail. Develop a comprehensive plan to upgrade the steam system(s).

- Add, repair, & replace insulation as necessary based on world energy prices and heat losses from various sources.
- Design and implement new steam trap selection & maintenance programs.
- Consider utilization of steam turbine drivers, particularly for critical services. Since the refinery may operate at reduced throughputs in the forseeable future, steam turbine drivers may afford some operating flexibility along with improved utility efficiencies at turndown conditions.
- Consider replacing steam tracing piping with stainless steel or copper tubing. Ensure proper installation and insulation of steam traced lines.
- Consider the use of steam turbines with admittance extraction nozzles at the low or medium steam system pressure to minimize condensing and to help regulate and balance the steam system.

f) Conduct regular heat exchanger evaluation audits. Cleaning schedules and anti-foulant injection procedures should be based on audit results.

g) Develop process optimization strategies and procedures based on economic and safe operations. Specifically; reduce Catalytic Reforming Unit operating pressure to improve yields.

h) Conduct "Test Runs" of individual process units to determine baseline process operations and yields. Accumulation of Test Run data would require:

- Calibration of Instruments.
- Complete feedstock and product analyses.
- Complete temperature and pressure surveys.
- Specific material balance development with the goal to quantify "losses".

i) Provide, evaluate, and replace as necessary utility monitoring instrumentation and confirm its accuracy. Process unit utility consumptions per tonne of product should be calculated with yearly goals set to reduce utilities, so far as practicable.

j) Evaluate new and improved catalysts for the Catalytic Reforming Unit that may provide yield and energy efficiency advantages. It is highly probable that the old catalysts can be traded for the new catalyst and in addition a hard currency pavement will be made to the refinery, due to the higher platinum content of the old catalyst. The refinery is working to achieve these goals.

k) Develop a detailed maintenance history and data logging program. Significant downtime data can justify equipment replacement.

l) Other recommendations are as follows:

- Investigate the use of structured packing as appropriate in other capacity limited towers, to improve fractionation and product quality.
- Install properly selected steam traps on all steam users.
- Where not already in place install permanent vibration and temperature monitors and shutdown devices on the refinery's critical compressors and air blowers.
- Investigate and install canned or magnetic drive pumps in dangerous chemical or acid service.
- Utilize a service for analysis and design of heat exchangers such as HTRI for designing new and rerating existing heat exchangers and look at pinch analysis of crude heat exchange train.
- Perform monthly flue gas analysis on each furnace and adjust burners accordingly. Preferably, go to automatic control, as suggested next.
- Install oxygen analyzers on furnaces in major refinery units. Preferably, install automatic fuel controls on all fired heaters in conjunction with "in-situ" Oxygen/flue gas analyzers.
- Purchase portable hand-held infrared digital thermometers for maintenance group for checking bearing housing temperature and insulation heat loss.

- Investigate the installation of remotely control of air dampers to furnaces.
- Investigate the installation of a flame guard system on burners.
- Study the addition of a vacuum pump to replace the steam vacuum jets in the normal operation of the vacuum unit. This will also improve environmental.
- Investigate the installation of condensate collection drums at the condensate collection stations; allowing low-pressure steam to flash off and used in storage tanks heating.

I. IMMEDIATE OPPORTUNITIES

DESCRIPTION	COST	BENEFIT
Develop and implement a comprehensive energy conservation program. This could include: • Formation of an energy audit team. • Purchase of publications (magazines, books, periodicals) related to specific energy conservation practices. • Attendance at AIChE, API, NPRA seminars related to energy efficiencies. • Precise monitoring of all utility consumptions for each process unit. • Calculation of energy consumed per unit of feed or product, and comparison to Western standards. • Authority to make changes to improve overall refinery energy efficiency. • Hold the unit manager responsible for energy consumption. By: Pavlodar Refinery	Insignificant if all the energy is now metered on the process units. Otherwise, the cost of installing those meters.	Significantly lower refinery energy costs. Provides a baseline for further yearly improvements. Major U.S. refiners have reduced their energy usage per barrel of crude run by over one third during the past 17 years. They are now averaging about a 1 percent reduction per year.

DESCRIPTION	COST	BENEFIT
Develop and implement a program to frequently monitor product yields and qualities along with utilities consumptions. Adjustments to process operating conditions would be recommended to optimize product values vs. feed and utility costs. This type of program could minimize lower value and maximize higher value product manufacture, and optimize product qualities (e.g., eliminate octane "giveaway"). By: Pavlodar Refinery	Minimum Variable	Immediate improvement in quantity of higher quality product.

I. Immediate Opportunities

DESCRIPTION	COST	BENEFIT
Attend education/training seminars related to fired heater operations and optimization with specific focus on optimum air to fuel ratios, and burner operations & maintenance. The training representative should conduct the seminar at the jobsite if at all possible. Result will be immediate improvement in fired heater operations and energy consumption. Supplier: John Zink or equivalent, or furnace combustion specialist or consultant.	$10 000 to $15 000 for 1 person for 1 week.	Immediate energy savings in the fired heater sections of the plant.

DESCRIPTION	COST	BENEFIT
Attendance at steam trap selection and maintenance education/training seminar with special emphasis on reduced steam consumption. Result will be lower overall steam consumption. Supplier: Spirax Sarco, Inc. 2806 Center Circle Dr. Downers Grove, Illinois 60515 or Armstrong International 1081 East Ocean Blvd. Stuart, FL 34996	$5 000/person Western firms may be willing to present a seminar at no charge.	Immediate steam consumption reductions resulting in lower overall energy expenditures.

I. Immediate Opportunities

DESCRIPTION	COST	BENEFIT
Attendance at a refinery equipment inspection, evaluation, and recertification training seminar. Result will be ability to enact an approved preventative maintenance program to improve turnaround maintenance efficiency, equipment failure rates, and overall safety aspects of the complex.	$5 000 per person	Improved process unit on stream time.

DESCRIPTION	COST	BENEFIT
Attendance at AICHE, API or NPRA seminars regarding refinery operations energy efficiency. Supplier: AICHE, API, NPRA or European Equivalent.	$5 000 (Estimate) per person	Result will be better understanding of modern refinery energy efficiency improvement practices which will yield improved refinery energy expenditures per mt of crude processed.

I. Immediate Opportunities

DESCRIPTION	COST	BENEFIT
Attendance at petroleum engineering design and operating course. Supplier: UOP or Equivalent	$3 000 (Estimated Course Cost) per person	Result will be improved understanding of modern basic engineering design practices that can stimulate future process unit revamp options.

DESCRIPTION	COST	BENEFIT
Purchase one thickness gauging system (e.g. sonogram, audiogram). Vendor: Krautkramer Branson P.O. Box 350 Lewistow, PA 17044	$3 000 to $5 000	Allows maintenance crews to accurately determine process equipment metal thickness to efficiently monitor equipment corrosion, schedule turnaround maintenance and preclude equipment failures.

I. IMMEDIATE OPPORTUNITIES

DESCRIPTION	COST	BENEFIT
Conduct "Test Runs" of individual process units to determine baseline process operations and yields. Accumulation of Test Run data would require: 1. Calibration of instruments. 2. Complete feedstock and product analyses. 3. Complete temperature and pressure surveys. 4. Specific material balance development with the goal to quantify "losses". By: Pavlodar Refinery	Variable - By refinery staff.	Provides a firm operations baseline for future process unit evaluations.

DESCRIPTION	COST	BENEFIT
Provide, evaluate, and/or replace the utility consumption monitoring instrumentation and confirm its accuracy. Evaluate overall Pavlodar refinery balances and utility system capabilities. Allows refinery staff to: 1. Qualitatively determine the capacity, reliability and future capability of the utilities systems. Results will determine if future utility adjustments (e.g. replacement of electric motors with steam turbine drives) could be justified. 2. Determine energy consumptions per unit of feed charged or product produced. Results will allow operating staff to adjust process conditions to improve overall energy efficiencies. By: Pavlodar Refinery	Variable - By refinery staff.	Provides concrete utility consumption numbers for each process unit. This will allow accurate evaluation of the efficiency of each process, and thus lead to identification and implementation of energy savings activities.

I. Immediate Opportunities

DESCRIPTION	COST	BENEFIT
Purchase portable hand-held infrared thermometer for maintenance group for checking bearing housing temperature and checking for insulation problems.	Budget Cost: $2 000	Improved on-stream time due to prevention of unscheduled maintenance; reduction of heat loss through poor insulation.

DESCRIPTION	BUDGET COST	BENEFIT
Perform monthly flue gas analysis on each furnace and adjust burner controls to minimize excess air. Attention to flue damper operation and burner air registers is also suggested.	Equipment has been supplied by John Brown through this U.S. AID program.	Immediate, in addition to environmental improvement. It is believed that a 10 to 15 percent improvement in fired heater efficiency is easily achievable. In 1992, Pavlodar reported fuel usage of 374 000 metric tonnes. At $70/mt and 10 percent efficiency improvement, this equates to a savings of $2.6 million dollars a year.

I. Immediate Opportunities

DESCRIPTION	COST	BENEFIT
Install "in situ" oxygen analyzers on furnaces on major the refinery units.	$14 000 each plus installation labor	Refer to "Flue Gas" analysis recommendation above. This project contributes significantly to the overall fuel savings.

DESCRIPTION	COST	BENEFIT
Consider using Western firms when it is necessary to replace heat exchangers, as they use computer programs for analysis and design of heat exchangers such as HTRI for designing new and rerating existing heat exchangers. The resultant new designs are more efficient and cost effective.	Minimal	At design operating rates for the crude units an increase in crude heat exchanger efficiency is worth $35 700 per year per degree centigrade. That is, getting 10°C more out of the heat exchange train will save $357 000/yr in fuel loss. It should be noted that part of the short-fall is due to fouling and the need for improved cleaning regimen, however, improved heat exchangers and system analysis is a necessary part of the energy improvement process.

I. Immediate Opportunities

DESCRIPTION	COST	BENEFIT
Conduct regular heat exchanger operating audits. Exchanger cleaning schedules and antifoulant injection procedures should be based on audit results. By: Pavlodar Refinery	Minimal/Variable By refining staff.	Energy savings due to improved heat exchanger operation.

DESCRIPTION	COST	BENEFIT
Evaluate refinery hydraulic loops to determine if excessive pressure drops are taken across fluid flow system control valves. Trim pump impellers to meet actual system requirements.	Minimal by refinery staff.	Reduced electrical energy consumption.

DESCRIPTION	COST	BENEFIT
Purchase a computer aligning machine to achieve more accurate machine alignment; hence lower failure rate.	Budget price for one computer = $5 000	Improved on-stream time, and thus improved plant profitability due to prevention of unscheduled downtime.

I. Immediate Opportunities

DESCRIPTION	COST	BENEFIT
Purchase and install a computer with proper software for the maintenance group for monitoring, controlling, scheduling and tracking the refinery maintenance management system.	Budget price for computer and software = $20 000	Improved on-stream time as a result of decreased amount of unscheduled downtime through improved planning.

DESCRIPTION	COST	BENEFIT
Develop an extensive equipment insulation program to repair and replace existing insulation in poor condition, supplement existing insulation in good condition as necessary, and add insulation to currently exposed equipment items based on world energy prices and heat losses of equipment. Improve insulation practices, for example, insulate bare pumps, valves, piping, and jacket with aluminum or galvanized sheet metal where process temperature exceeds 65°C.	Approximately 250 parts at 1.0 m^2 each. Installed cost at $210/$m^2$ = $52 500	At average process temperature = 150°C, heat loss with a 3m/sec wind, approximately 3 200 Kcal/m^2 = 800 000 Kcal/hr Approximate value: $800\,000 \frac{Kcal}{hr} x \frac{Kg}{9\,800\ Kcal} x \frac{tonne}{1\,000\ kg} x \frac{7\,920\ hr}{yr} = 646.5 \frac{tonnes}{yr}$ $\frac{646.5\ tonnes}{yr} x \frac{\$70}{tonnes} x \frac{1}{0.80\ EFF} = \frac{\$56\,571}{yr}$ Payout: $\frac{\$52\,500}{56\,571} = 0.93\ years$

I. IMMEDIATE OPPORTUNITIES

DESCRIPTION	COST	BENEFIT
Where not already in place install permanent vibration and temperature monitors and shutdown devices on refinery's critical compressors.	Budget cost: $2 000/point. Estimate 8 pts/compressor. Cost = $2 000 x 8 = $16 000	Based on refinery experience, it is reasonable to assume 2 failures/yr. Cost of failure = $10 000. Total cost $10 000 x 2 = $20 000. Payback = Less than 1 yr.

DESCRIPTION	COST	BENEFIT
Investigate steam and condensate recovery system operations and options. Current lack of steam traps and condensate recovery systems result in inefficient utilization of the steam source. Audit the steam generation, distribution, utilization, and condensate return equipment and balances in detail. Develop a comprehensive plan to upgrade the steam system(s). 1. Add, repair, or replace insulation as required. 2. Implement complete steam trap selection and maintenance program. 3. Consider utilization of steam turbine drivers, particularly for critical services. This type of driver can provide improved utility efficiencies at turndown operations. 4. Replace steam tracing piping with stainless steel or copper tubing. Ensure proper installation and insulation of steam traced lines. For example, install steam traps on steam condensate lines in the refinery's tank farms.	1 trap = $200 Installed = $400 Total cost = $400 x 100 = $40 000	Savings of $1 000 to $3 000 per year per application are possible, <u>if</u> steam is now allowed to blow through unchecked in heating unit. Potential Pay-back, per trap $\frac{\$400}{\$1\ 000/yr} = 4.8$ *months*

I. Immediate Opportunities

DESCRIPTION	COST	BENEFIT
Action: Provide a review of and training in capital budgeting practices. Benefit: Allocation of capital funds in a business must be based on maximizing financial return. A portion of available funds are needed for maintenance, environmental and safety purposes. However discretionary capital should be allocated on a sound technical/economic basis. Refinery management needs the tools and understanding to recognize and support projects that minimize costs (in many cases energy savings) and thus maximize profits. Yield improvements, labor reduction, new products, new business lines, etc., also fall into this category. Supplier: To be determined. Business schools or individuals from project justification/financial analysis areas are possible sources. Groups specializing in management training, such as the AMA are another source.	$25 000 Estimated/person Follow-up $15 000/person	Improved return on invested capital and proper allocation of limited funds.

DESCRIPTION	COST	BENEFIT
Repair broken and damaged cooling tower sheathing to allow better cooling tower efficiency.	Budget price per tower - $5 000	A tower cooling water supply temperature can be translated to reduced water flow and lower pumping costs.

I. Immediate-Term Opportunities

DESCRIPTION	COST	BENEFIT
Investigate and install a lube oil analysis maintenance program to reduce equipment failure.	By refinery staff.	A full analysis of lubrication requirements and implementation of resulting insights will aid in reducing equipment failure and resulting loss of product due to unscheduled downtime.

DESCRIPTION	COST	BENEFIT
Action: Consider installation of variable frequency drives in selected applications.	Varies with application	Reduce energy consumption, improve product quality, and product quantity.

I. Immediate-Term Opportunities

DESCRIPTION	COST	BENEFIT
Investigate the installation and justification of condensate collection drums at the condensate collection stations.	Material and labor cost for 20 foot high x 10 foot diameter drum = $50 000.	Allowing low-pressure steam to flash off and be used in storage tank heating.

DESCRIPTION	COST	BENEFIT
Study the addition of a vacuum pump to replace the steam vacuum jet in the normal operation of the vacuum tower.	Installed = $30 000	Ability to obtain tower vacuum and more efficient operation of the vacuum system. Current low energy costs may not at this time justify the cost expenditure required would also reduce waste water contamination.

DESCRIPTION	COST	BENEFIT
Investigate the installation of a flame guard system on furnace burners.	Material - $1 000 for 28 burners = 28 x $1 000 = $28 000 Installed = $56 000	Combination of safety (prevent fire or explosion) and savings in excessive fuel usage should a burner fail.

ii. Medium-Term Opportunities

Below is a listing of medium term, intermediate capital cost opportunities (approximately $100 000 to $5 000 000) for energy efficiency or operational improvements:

a) Improve fired heater overall operations and efficiencies.

- Add advanced process control of combustion air & fuels.
- Replace or repair of burners as necessary.
- Replace heaters with steam reboilers where feasible.
- Consider incorporation of a Hot Oil System if replacement of fired heaters (e.g. reboilers) and/or exchangers becomes necessary.

b) Invest in computer software as follows:

i) Simulation program(s) for Fractionation, Crude / Vacuum Distillation, Reforming, and Distillate Hydrotreating and FCC Unit operations.

ii) LP Model for profit analysis based on alternate feedstocks and the resulting product slate.

c) Commission some or all of the following studies intended to improve the energy efficiency, operability, and/or product yields of the refinery:

- Installation of Advanced Control Instrumentation, particularly for combustion control.
- Modification / revamp of existing Catalytic Reforming Unit equipment (reactors, fired heater tubes, piping, etc.) for suitability to higher temperature (> 1 000 °F) operations for increased gasoline octane capabilities.
- Improve Vacuum Fractionation potential by modification of the current column configurations and/or internals.

d) Upgrade Steam Generation Systems

- Upgrade condensate recovery systems such that condensate is recovered and returned to the steam system.

- Consider Steam Turbine Drivers to improve efficiency of turndown operations. Investigate the economics of adding a turbine nozzel for steam admittance/extraction to minimize condensing and help to balance the steam system.

- Consider steam heated reboiler exchangers to replace fired heaters, where feasible.

22

II. Medium-Term Opportunities

DESCRIPTION	COST	BENEFIT
Commission a comprehensive study to investigate how best to improve overall fuel fired efficiencies considering: a) Addition/utilization of Advanced Process Control of combustion air and fuel(s). b) Replacement or repair of burners as necessary. c) Replace fired heaters with steam reboilers, where feasible. d) Consider incorporation of a Hot Oil System if replacement of fired heaters (e.g. reboilers) and/or exchangers becomes necessary.	A comprehensive study is estimated to cost between $150 000 to $200 000.	Immediate energy savings expected. The fired heaters are the most energy intensive equipment items in the refinery. They also appear to have the most potential for improved energy efficiency.

II. Medium-Term Opportunities

DESCRIPTION	COST	BENEFIT
Invest in computer software as follows: a) Simulation program(s) for Fractionation, Crude and Vacuum Distillation, Catalytic Reforming, and Distillate Hydrotreating. b) LP model for profit analysis based on variable feedstocks and resultant product slates. Allows systematic approach to operations and yields predictions. Simulation Program Suppliers: Hyprotech - "Hysim" Sim-Sci - "Process", 'PRO/II", "ASPEN/SP" Chem Share - "Design II" AspenTech - "ASPEN PLUS" or equivalent	$20 000 to $250 000 Depending on program selected and training required.	Improved refinery operation and their profitability.

3/4

II. Medium-Term Opportunities

DESCRIPTION	COST	BENEFIT
Commission a study to evaluate best implementation of advanced control instrumentation for optimized process operations.	$250 000 (Est.)	Results in improved energy efficiencies, product quantity and/or product quality that are generally paid-off in less than one year.

DESCRIPTION	COST	BENEFIT
Commission a study to evaluate revamping of the existing Catalytic Reforming Unit to higher temperature/lower pressure operations for increased octane and yield benefits.	$250 000 (Est.)	Improved yields and product qualities of a high value product. Is needed to improve overall refinery profitability.

II. Medium-Term Opportunities

DESCRIPTION	COST	BENEFIT
Upgrade the steam generation, distribution, and condensate recovery systems to improve utility efficiency. • Upgrade condensate recovery systems such that condensate is recovered and returned to the steam system. • Consider Steam Turbine Drivers to improve efficiency of turndown operations. Investigate use of admittance/extraction nozzle. • Consider steam heated reboiler exchangers to replace fired heaters, where feasible.	To Be Determined	Reduced steam consumptions resulting in improved refinery utility efficiency.

DESCRIPTION	COST	BENEFIT
Action: Consider installation of two-speed/reversing motors/controllers on all cooling towers	$160 000	Reduced energy consumption, and maintenance (due to reduced icing) An economic justification of this recommendation should be undertaken, considering reduced energy consumption and maintenance costs.

iii. Long-Term Opportunities

Below is a listing of long term, significant capital investment (greater than $5 000 000) opportunities for greater energy efficiency or operational improvements. Implementation of these projects should be considered following a detailed evaluation of long range plan of the Pavlodar refinery operations.

a) Proceed with plans to complete the partially completed Combined Unit. Potential process additions should be appraised with the realization that the refinery may process heavier, higher sulfur content crude oils in the future.

b) The refinery must acknowledge that strict adherence to Kazakhstan state and world standard product specifications will be required in the future. Improved production quality standards may become necessary. Consideration should be given to:

- Merox treating of LPG, Gasoline, and Jet Fuel products.
- Higher octane requirements of the gasoline pool, Alkylation Unit.
- Lower sulfur requirements of heavy fractions.
- Fuel Oil desulfurization
- Additional elemental Sulfur Recovery

c) Incorporate Advanced Process Control or Distributed Control Systems into the refinery. This will require replacement of the majority of the refinery instruments. Consolidation of Control Rooms should be considered.

III. Long-Term Opportunities

DESCRIPTION	COST	BENEFIT
Proceed with plans to complete the partially completed Combined Unit. For the future, consider the following units for bottom of the barrel processing. • RCC Unit (similar to FCC technology - for processing of atmospheric reduced crude. • Hydrocracking Unit Potential process additions should be appraised with the realization that the refinery will process heavier, higher sulfur content crude oils in the future.	If the refinery feels that additional studies are necessary to secure financing, a budget cost of $350 000 to $500 000 is suggested.	Would place a partially completed asset in operation to meet projected future growth.

DESCRIPTION	COST	BENEFIT
The refinery must acknowledge that future strict adherence to Kazakhstan state and world standard product specifications will be required. Improved production quality standards may become necessary. Consideration should be given to: • Merox treating of LPG, Gasoline, and Jet Fuel products. • Higher octane requirements of the gasoline pool. • Future addition of an Alkylation Unit. • Lower sulfur requirements of heavy products which could require : a. Fuel Oil desulfurization b. Additional elemental sulfur recovery	To be determined	To meet future product quality and market demands.

e. Environmental Emissions Reductions

i. Immediate Environmental Opportunities

There were no observed situations in which field changes could be made during the site visit which would reduce the refinery environmental emissions. There are, however, some low-cost activities that can be undertaken.

I. Immediate Environmental Opportunities

DESCRIPTION	COST	BENEFIT
The following environmental activities could be undertaken with little capital expenditure.		Improved environmental conditions through reduction of oil outflow in waste water.
1. More frequent skimming of floating oil at the intermediate settlers.	Additional man hours of existing staff.	
2. Optimize operation of the dissolved Air Floatation Unit. Add more flocculent and increase amount of compressed air fed to the unit.	Cost of chemicals and power from Air Compressor.	

320

I. Immediate Environmental Opportunities

DESCRIPTION	COST	BENEFIT
Investigate and install a canned or magnetic drive pump in LPG dangerous chemical or acid service.	Budget Cost: $15 000	Personnel safety and environmental benefits through reduced VOC emissions.

DESCRIPTION	COST	BENEFIT
a. Supply the plant with stack gas analyzers which will allow them to optimize combustion to minimize the release of NO_x and CO.	$15 000	• Reduction of air emissions.
b. Provide an ambient air organic vapor analyzer so surveys of pumps, flanges, valves and vents can be conducted. With these data, a program of volatile organic emission reduction could be developed.	$10 000	• Generate an employee awareness of pollution control activity.

DESCRIPTION	COST	BENEFIT
Investigate the environmental benefit of converting existing burners to lower NO_x type.	Estimate cost low NOx burners at $1 000/burner	Immediate, environmental benefits

I. Immediate Environmental Opportunities

DESCRIPTION	COST	BENEFIT
a) Establish an Employee Environmental Education Program.	Cost of refinery manpower assigned or cost of outside consultant, estimated at $25 000.	Improved environmental conditions through education and resultant actions.
b) Determine the source of excess waste water flows.	Refinery manpower.	Improved environment through remedial actions.
c) Survey the valves, flanges, and vents for hydrocarbon losses. In conjunction with acquisition of an Organic Vapor Analyzer.	Refinery manpower.	Reduced VOL emisson through corrective actions.

ii. Medium-Term Environmental Opportunities

II. Medium-Term Environmental

DESCRIPTION	COST	BENEFIT
Install a storage tank vent collection system on the 38 tanks storing volatile products. Install three vapor condensing systems on the vent system above.	5 000 x 38 tanks = $190 000 2 at $15 000 = $30 000 Total = $220 000	• Recover about 8 300 mt of product per year. $160/mt or diesel is appropriate world price of product in Fall 1993. At $160/mt, this is $1.33 million savings or a 2 month payback.

iii. Long-Term and Further Environmental Work Required

The recommendation for further environmental work transcend the refinery. A state effort must be put forth to develop a viable body of laws, rules, regulations, inspection, and statewide inspection/enforcement procedures. This effort must involve the local District political and industrial representation plus interface with adjacent Districts or countries, as well. This effort will be required over a period of 5-10 years. The cost cannot be estimated at this time.

The results of this activity will provide the direction for future technical changes in refinery configuration and operations.

III. Long-Term Environmental

DESCRIPTION	COST	BENEFIT
The following activities will require additional studies and/or significant expenditures.		
a) Install combustion controls on the process heaters.	Previously suggested under energy saving section of this report.	Reduction in emissions as well reduced fuel usage.
b) Revamp or replace oil traps with an API Type Separator.	Minimal to $100 000 plus if replacement needed.	Improved waste water quality and increased recovery of waste oil.
c) Separate salty from oily waste water.	Study needed - $25 000 estimated.	Improved waste water conditions.
d) Modify sulfur plant so that it operates efficiently at the reduced feed rates now seen in refinery.	Engineering Study $50 000 to $100 000.	Implementation of results of study would reduce SO_2 emissions significantly.

6. Supporting Plant Data

a. Thermal Energy

i. Heat Transfer Equipment

a) Fired Heaters

The crude section atmospheric charge furnaces P-101 and P-101/1 are side-fired updraft with the flue gas collected and fed to a large 10 meter diameter 160 meter high stack. A small reboiler heater P-102 for K-104, the debutanizer tower, is bottom fired and feeds its flue gas into the P-101 header. The stack contains two waste heat boilers. The diesel desulphurizer P-301 lies on the opposite side of the stack. It is bottom fired updraft with its flue gas feeding into a top-mounted flue gas header which discharges into the stack, 180° opposite to crude furnaces' discharge. The kerosene desulphurizer furnace P-302 lies next to P-301, it also is a bottom fired updraft unit with its flue gas being collected by the same header.

The next furnaces in the line-up are the reformer furnaces. P-201 is the desulphurizer charge furnace and P-203/1,2,3 heats the last three reformer reactor feeds. These furnaces are side-fired updraft with the flue gas being collected in the same top header as P-301. P-202, P-204 and P-205 are fired tower reboiler heaters.

The vacuum tower furnace P-601 in the FCC complex is bottom fired with the flue gas collected in a top header. Into this same header is collected the flue gas from the visbreaker furnaces N-701 and the Vacuum Gas Oil Hydrosulfurizer (VGO HDS) furnace P-101. The heat is extracted from the flue gas in two waste heat boilers before being discharged into a 10 meter diameter by 160 meter high concrete stack.

The furnaces on the hydrogen unit for methane steam reforming are two tall adjacent side-fired top draft furnaces with a waste heat boiler built across their tops. Time did not permit observation of the delayed coker, sulphur plant and bitumen unit furnaces.

Burners on the fired furnaces on the light oil and heavy oil combination units are combination burners. They can fire on

100 percent oil, but not 100 percent gas. On the light oil combination unit, at the time of our visit, they were firing 50 percent mazut and 50 percent fuel gas. On the heavy oil combination unit, they were firing 30 percent mazut and 70 percent fuel gas. The furnaces at the delayed coker, sulphur plant and bitumen unit are fired on fuel gas only.

The heat content of the mazut varies somewhat while that of the fuel gas can change drastically at a rapid pace. To compensate for this, the operaters open the air registers on the burners to the wide open position to prevent smoke formation. It also makes the furnaces easy to control. This also makes for high excess air in the flue gas and lower furnace efficiencies.

b) Heat Exchange

Most of the refinery's heat exchangers are of the shell and tube variety. Product cooldown is normally achieved by first cooling the product down, by heat exchanging with other process streams, in shell and tube exchangers. When a temperature is reached where further product cooling with process streams is not practical then further cooling in forced air cooling exchangers is done. The final trim cooling is done with cooling water in shell and tube exchangers.

Exchanger insulation is generally mineral wool covered with galvanized sheet metal. On the light oil and heavy oil combination units, most of the exchanger bonnets, nozzles and channel covers are not insulated.

c) Waste Heat Recovery

The refinery has the following waste heat recovery systems:

- Light oil combination unit - Two boilers (12 kg/cm^2 and 36 kg/cm^2) generate 30 mt/hour of steam from the atmospheric crude, kerosene and diesel desulphurizers and reformer furnaces' flue gas.

- Heavy oil combination unit - Two boilers generate steam from the vacuum distillation, visbreaker and VGO HDS furnaces. One boiler generates steam from the regenerator flue gas. There are also small heat generators

on the diesel and asphalt streams of the vacuum distillation unit and two on the visbreaker quench.

- Hydrogen unit - A boiler using the furnaces flue gas as heating media.
- Sulphur plant - A boiler and two steam generators.
- Delayed Coker - Two boilers using furnace flue gas as heating media plus one boiler using the flue gas from the rotary kiln on the coker calciner.
- Bitumen plant - A boiler using the oxygen exit gas as heating media.

The waste heat boilers supply about 100 mt/hour which is about 30 percent of the refinery steam demand of 300-320 mt/hour.

The light oil combination unit's two waste heat boilers are an unusual design. The accumulators, deaerators, boiler feedwater pumps and the other boiler appurtances are housed in a two story donut shaped brick building. Occupying "the hole-in-the-donut" is a 10 meter diameter, 160+ meter high concrete stack. The mud drum, steam drum, boiler tubes and super heating tubes of the 12 kg/cm^2 and 36 kg/cm^2 boilers are in the concrete stack.

The final flue gas temperature standard is no more than 195°C (383°F) after steam generation. But as a practical matter the refinery runs closer to 220°C (428°F). The refinery has noted that as they approach 195°C, corrosion greatly increases. They have needed to retube the light oil combination unit waste heat boilers due to corrosion, more than once a year. The use of 18-8 SS tubes has been suggested to the refinery.

d) Cost Effectiveness of Increasing Heat Transfer Surfaces

When the refinery has reasonable figures for its present and future projected energy costs, it should strongly consider doing "pinch" analyses for the heat exchangers on its major process units. Other factors that favor preforming a pinch analysis are; has the refinery been modified since the original design and is the crude being run the original design crude. The analysis

would help determine the economics of adding more exchangers to increase heat transfer and/or changing the heat exchange configurations. It will also help the refinery to set economic priorities in increasing heat transfer surfaces and/or changing heat exchange configurations.

As a rough example, the economic driving force to improve heat transfer within the light oil combination crude heat exchange train is as follows:

Basis: Design Unit Feed Rate	947 tonnes/hour
Specific heat of crude oil	0.6 kcal/kg - °C
Fuel Oil heating valve (minimum)	9 800 kcal/kg
Heater Efficiency	90%
Fuel Cost, World Price Basis	$70/mt

$$\frac{947\ t}{hr.} \times \frac{24hr}{day} \times \frac{0.6\ kcal}{kg\text{-}°C} \times \frac{1\ 000\ kg}{t} = \frac{13.63 \times 10^6\ kcal}{°C - day}$$

At 90 percent furnace efficiency and an operating time of $\frac{330\ days}{yr}$

$$\frac{13.63 \times 10^6\ kcal}{°C - day} \times \frac{kg}{9\ 800\ kcal} \times \frac{\$70}{1\ 000\ kg} \times \frac{1}{0.90} \times \frac{330\ days}{yr} = \frac{\$35\ 715}{°C - yr}$$

i.e. The operating cost reduction, due to a decrease in the amount of fuel fired, is $35 715/year per °C rise in crude temperature, as a result of improved heat recovery in the crude heat exchange train. At 75 percent furnace efficiency, the savings becomes $42 860/year for each °C the furnace inlet temperature is raised.

Achievement of these savings may be possible through improved heat exchange design, minimization of fouling and optimization of the heat exchange train system.

e) Tracing and Temperature Maintenance Systems

All heat tracing and temperature maintenance is done with steam. The gas lines to the flares are steam traced for freeze protection. Some of the instrument cabinets are steam heated for freeze protection and/or heat maintenance. All hot product lines are steam traced for heat maintenance.

Carbon steel tubing is used for most of the tracing. Most of the tubing joints are made-up by welding. A minor use of tubing fittings was observed.

ii. Heat Rejection Systems

a) Cooling Water Systems

Cooling water is furnished to the process units from packed cooling towers. For further information on cooling towers see "Environmental Considerations" - Cooling Towers, paragraph IV.C.5.c.

At Pavlodar, the main uses for cooling water are:

- Final trim cooling of product and rundown streams in shell and tube exchangers.
- Provide cooling media for the inner and after coolers of the instrument and plant air compressors.
- Provide cooling media for the inner coolers of the reciprocating compressors in the light and heavy oil combination units.
- Provide cooling media for the heat exchangers cooling the air in large synchronous and induction motors.
- Provide cooling media for the lube/seal oil coolers of the centrifugal compressors.

Total cooling water circulation capacity is 7 200 cubic meters per hour. Evaporation losses make-up is about 350 m^3/hr. This make-up is untreated river water, which is reported to be very soft. The temperature difference of the heat exchanger approach is normally 12° to 15°C (22° to 27°F). As energy costs rise toward world prices the refinery will be able to justify more exchanger surface area to get smaller temperature differences.

b) Air Cooling System

The air coolers observed at Pavlodar were of two general sizes. Both sizes were of updraft design and configured as vane axial units with shaped inlet bells. The smaller size has an eight-bladed manually fixed-foil fan about 2.5 meters in diameter. It is powered by a direct 30 kW vertically mounted motor. The larger size has an eight-bladed manually fixed-foil fan about 4 meters in diameter. This larger unit is directly powered by a 55 kW vertically mounted motor.

Both units are built of flat exchanger sections which are composed of rows of finned tubes rolled at each end into header plates and covered by a cast bolted header cover. The smaller unit's sections are about one meter wide, five meters long and one-third of a meter deep. The small units have six sections mounted in three horizontally paralleled inverted "Vs". The larger unit's sections are seven meters long and are mounted in four horizontally paralleled inverted "Vs".

The air coolers themselves are used singly and in paralleled arrays. The most common array seen was a two section by two section square. At the light oil combination unit, most of the air coolers are mounted on a roof structure that covers the pump alleys. The roof structure extends about one-third of a kilometer.

c) Equipment, Piping, and Steam Heat Losses

The Pavlodar refinery's relative heat losses are higher than those now normally seen in Western refineries. There are four main reasons for this:

- The first is that more insulating, using better insulation, needs to be done. The only high temperature solid

insulation seen in Kazakhstan was that installed on a GE turbogenerator during the Post WW II Lend/Lease Plan at Atyrau. Fiberglass and mineral wool are used in blanket form for insulating. The mineral wool where used as high temperature insulation is not very adequate. The organic binder burns off and the insulation then rapidly deteriorates. Also, blanket mineral wool and fiberglass are soft and provide poor underlayment for sheet metal or aluminum covering.

The refinery needs to do a better job of weatherproofing its insulation. Both fiberglass and mineral wool wick and absorb moisture reducing the insulating efficiency and leading to possible pipe corrosion.

- The second is that with the very low previous price of Soviet crude oil and gas, there was very little economic incentive for refinery designers to spend extra capital funds to make equipment and/or units more energy efficient.

- The third reason is the longer piping runs due to the spread out process units and the greater distances between process units compared to Western refineries.

- The fourth is the lack of combustion controls and the wide open air registers seen on almost all furnaces and heaters that lead to the high excess air noted. This in turn leads to higher heated air losses to the atmosphere.

Valves, pumps, exchanger bonnets and other items that are time intensive to insulate were generally left uninsulated. As crude and natural gas prices rise to world market levels, economics will more forcibly dictate more and higher levels of insulation.

b. Mechanical Energy

i. Compressors and Fans

The light oil combination unit has two centrifugal compressors, both located on mezzanines in the unit's compressor building. The first is the steam turbine driven reformer gas compressor, UK-201. The 6 000 kW machine boosts the recycle gas stream from 20 kg/cm^2 inlet pressure to about 36 kg/cm^2 discharge pressure. The second centrifugal compressor is the 2 000 kW electric motor driven diesel desulphurizer's recycle gas compressor, UK-301. For both machines, the lube oil pumps, filters and coolers are located below the mezzanines.

Also located in the compressor building are four 1 200 kW reciprocating compressors. One (PK-301) plus a spare (PK-302) are the Kerosene Desulphurizer recycle gas compressor. The other two machines (PK-303 and FK-304) are the hydrogen compressors. All four are driven by low speed synchronous motors.

There are two sets of centrifugal compressors at the FCC complex. The first set are the three 4 000 kW FCC regeneration air compressors. The drivers are 3 000 rpm synchronous motors. The second set are the three 3 200 kW FCC wet gas compressors, with induction motor drivers.

The complex also has three 2 000 kW reciprocating compressors for the vacuum gas oil hydro-desulphurizer section with 1 000 rpm synchronous motors.

The plant air compressor station is a two story building. The compressor room area is two stories high and has an overhead travelling crane. The five plant air compressors are reciprocating machines with two twin parallel stages sharing a single interstage cooler. Each compressor is rated at 100 m^3/min at 8 kg/cm^2. The compressors are driven by 630 kW synchronous motors with drip-proof enclosures. The nameplate ratings are: 630 kW, 50Hz, 3Ø, ±0.9PF, 500 rpm, 6kV, 71.5 A, field voltage 35 volts, field current 262 A, efficiency 93.4 percent, weight 3835 kg and built 1976 in the USSR.

There are two instrument air compressors in the compressor room. Each of the compressors is rated at 20 m^3/min. at 4 kg/cm^2.

There are six large instrument air dryers which are operated on eight hour cycles. Following the dryers are large dust filters. Design dew point is minus 40°C, while the actual dew point is close to minus 60°C (-76°F).

Adjacent to the compressor room, occupying the first floor are a workshop and electrical equipment room with the compressor building control room on the second floor. The recorders used are the miniature Russian built units seen throughout the refinery. There are controls to start, stop, load, and unload the compressors. Loading of the compressors is done in 25 percent steps. Also located on the board were emergency stops for all the compressors.

There were other compressors in the refinery that were not observed due to time limitations such as those at the hydrogen plant and the bitumen unit.

Their are induced draft fans on all the large furnaces on the combination unit and in the FCC complex.

The housekeeping in the compressor buildings was good to very good. The foundations all appeared to be adequate, there was no evidence of vibration problems. The buildings were spacious and plenty of room has been left for compressor maintenance. All the compressor buildings had bridge cranes installed.

Bentley-Nevada vibration monitors are installed on the two Light Oil combination unit's centrifugal compressors, the 6 000 kW reformer recycle gas compressor and the 2 000 kW diesel recycle gas compressor.

ii. Pumps

The housekeeping in the pump areas varied from good to very good. The pumps are installed with very adequate space for servicing and routine maintenance. The pumps are elevated on poured concrete foundations and were generally painted. Coupling guards were in place, painted in safety colors and had the pump number stenciled on them.

Some piping practices are poor and would be unacceptable by Western standards. Pump inlet and outlet flanges are used as pipe supports and as anchor points. Some piping on the units is run

along at grade to pumps, exchangers, and sewers providing tripping hazards. Pump casing and impeller condition is unknown but no evidence of malfunctions due to these conditions were seen. The unit's mechanical engineer maintains a passport type repair log for each of the unit's mechanical equipment. The average pump chronological age is about 15 years.

Most of the refinery's pumps are centrifugal with single mechanical seals. Some of the heavy oil pumps on the delayed coker, bitumen unit and heavy oil combination unit have double mechanical seals.

iii. Electric Motors

Most of the refinery motors are Soviet built TEFC-XP (totally enclosed fan-cooled-explosion proof motors). Motors 200 kW and over are powered at 6 kV; 160 kW and below, 380 volts is used.

At the present time, the largest motors in the refinery are the three 4 000 kW 3 000 rpm synchronous motors driving the three regeneration air blowers in the FCC section of the heavy oils combination unit. The next largest motors are the three 3 200 kW induction motors driving the three FCC wet gas compressors. The three 4 000 kW motors have air reactors in their starting circuits to reduce their starting currents to within acceptable limits for the refinery electrical systems.

Besides the three 4 000 kW machines, all of the reciprocating compressor drives are synchronous motors. There is in the refinery over 25 MW of connected synchronous motor load. This helps explain the refinery's excellent 0.89 power factor. The large synchronous machines on the process units are air cooled machines with the internal circulating air cooled by a water cooled heat exchanger.

With the refinery's present electrical costs, the use of high efficiency or variable speed motors in the refinery would seem to be a very low priority energy saving projects. They would have to be purchased with hard currency, have only a nominal efficiency advantage over Russian built motors and would have a long payout time.

iv. **Steam Turbines**

The only steam turbine in the refinery at the time of our visit is the 6 000 kW 7 500 rpm Soviet manufactured steam turbine driver for the catalytic reformer recycle gas compressor. Steam is admitted to the turbine at 38 kg/cm^2 at about 390°C. The condensate is returned to the district power station to help meet the 33 percent condensate return requirements.

v. **Special Equipment**

The coke from the delayed coker is calcined in an approximately 100 meter long rotary kiln at 1400°C (2552°F.) The flue gas from the kiln supplies the heating media to a waste heat boiler. The kiln's design production is 120 000 mta. Actual present yearly tonnage is about 74 000.

Another item of special mechanical equipment on the delayed coker is the hydraulic decoking system used to remove coke from the coking drums. The hydraulic decoking system consisted of the following.

a) Two high pressure (1808 kg/cm^2) decoking water pumps.

b) Boring tool. Hydraulically cuts a pilot hole (approximately one meter diameter) through the filled coke drum.

c) Cutting tool. Hydraulically cuts the coke from the drum.

d) Drilling assembly. Air motor, power swivel, rotary drill hose, crosshead guide and hoist assembly.

The vacuum in the vacuum tower of the Vacuum Distillation section of the Heavy Oil Combination Unit is generated by three parallel, three stage steel steam ejectors.

c. **Energy Loss Monitoring**

Pavlodar has a new computer system, "Energy". All energy usage is monitored and sent back digitally to a Hyundai HDP-920 computer located in the refinery office building. The computer monitors, calculates and prints out all energy usage, peaks, changes, etc. It is furnished with a CRT display and a teletype printer.

While the refinery is monitoring energy usage, it is not monitoring energy losses. Missing and needed are the following:

- Temperature surveys to monitor heat exchangers and compressor after and intercooler efficiencies to determine exchanger and cooler cleaning schedules. Also, surveying heater stack temperatures to help monitor excess air and possible heater problems.

- "Pinch analyses" of the various process unit's heat exchanger trains to determine if more heat recovery could economically be made by the use of more exchangers and/or changing the heat transfer configurations.

- Combustion controls on boilers and furnaces. No oxygen analyzers, either sampling or "in situ" types, where observed monitoring excess air. This is the first step in implementing combustion control.

d. Refinery Maintenance Practices (Miscellaneous Elect./Instr. & Mech. Details)

i. Policies

Besides the main maintenance shops (see section d.iv), there are small mechanical electrical and instrument shops located at the process units. There is a supervisor at each shop. The refinery policy in general is that small, daily, low capital work and/or repairs are done in the field. Large, non-routine, capital intensive work is done in the main mechanical, electrical and instrument shops. Large electrical equipment, such as a very large motor or transformer, is generally sent to an outside repair shop, which has a contract agreement with the refinery.

Each unit has its own mechanical engineer. The bigger units, such as the combination units can have four or five additional engineers while small units may have one. The mechanical engineer handles scheduled maintenance and equipment history. The engineers also provide technical assistance to the 5-20 unit maintenance personnel.

The welding on code vessels, whether for repair or manufacture, is 100 percent radiographed. Welders are retested each year in all the procedures for which they are qualified. Vessels operating

under partial hydrogen pressures and high temperatures are guaranteed for twenty years. After 20 years service, continued use of the vessel requires that a special test be performed on it, each year, by the Lenneftetchin Institute of St. Petersburg. The Institute then sets a maximum temperature and pressure the vessel may be operated at for the coming year. The reactors in the reformer diesel desulphurizer and the kerosene desulphurizer are first due to be tested in 1998.

The electrical department uses staff selection for their apprentice program. Promotion is by testing and training and is done at the local university. The mechanical group's staff sends prospective machinists to the shop head. He interviews them and then makes the hiring decision. Those hired are given two weeks of basic training and then put into the machinist apprentice program. Outside help is used for training and examinations.

ii. Overall Impressions

While the Pavlodar refinery is spacious with the various units well spread out, it does represent a change in design philosophy from a "just single units" philosophy to a more modern energy efficient combination unit philosophy. This change was first seen at Lysychansk in the Ukraine, a combined FCC/Gas Oil desulphurizer. Then at Shymkent in Kazakhstan, a light oil combination unit consisting of an atmospheric crude, catalytic reformer, kerosene and diesel desulphurizers and a vapor recovery unit. Now here at Pavlodar, besides a Light Oil Combination Unit, that is a fraternal twin to the one at Shymkent, there is a heavy oil combination unit. It consists of a vacuum distillation unit, a visbreaker, a Vacuum Gas Oil Desulphurizer, a FCC unit and a vapor recovery unit. Combination units are being built to gain the heat integration savings, lower capital costs, and possible lower personnel operating costs.

By U.S. standards, this is a new refinery. The light oil combination unit started up in 1978, the sulphur and bitumen units in 1979, the heavy oil combination and hydrogen units in 1983, the delayed coker in 1986 and the coker calciner in 1986. However, the technology on the units is generally a generation older than the units, 1960s or early 1970s technology. Compounding the generation gap is that the constant upgrading seen in U.S. refineries is being done at Pavlodar to a much lesser extent. The refinery is not being forced to improve its technology

by its competitors, high energy prices, EPA, OSHA and a dynamic highly competitive petroleum products market. Pavlodar has been able to serve its market, meet its quotas without having to worry about outside forces, (excepting crude supply).

The fire brigade is composed of special troops of the Kazakhstan army under the command of an army Captain. There are two fire stations, the smaller one was visited by John Brown. Its mobile equipment consisted of a large ladder truck, a pumper and a foam truck with spray nozzle. The small station's personnel complement was 11 men per shift and the large station 27 men per shift. Our overall impression was that the fire brigade was very professional, has good equipment which it keeps in first class condition.

The Heavy Oil combination unit and delayed coker/calciner have made Pavlodar into a fairly complete refinery. The one process unit that seems to be missing in the refinery is an alkylation unit. The refinery already has the isobutane and butylene/propylene feedstock for a new alkylation unit. The alkylate product can then provide the necessary octane boost without lowering the RVP of the gasoline that will be needed to fuel the more energy efficient, less polluting gasoline engines that will be used in the coming years.

The refinery needs to upgrade its process control by installing distributed control systems (DCS) on the process units. With the implementation of the DCS, the refinery needs to implement advance controls, so as to start generating the cost savings and profits that these controls can bring. Some advance controls that should be considered for use with the start-up of the DCS or shortly thereafter are:

- Atmospheric Crude Section

  - Decoupling the side draws - This control allows the board operator to increase/decrease a side product draw (changing that product's IBP and EBP) without upsetting the other product side draws.

  - Cutpoint Calculation - This control replaces an expensive high maintenance analyzer. It calculates and infers boiling point measurements such as 95 percent point from tower

measurements. These measurements can then be used for tower controls.

- Pump-around-Control - This control looks at the pump-around flows, temperature, energy use and heat transfers and then determines the economics of increasing/decreasing pump-around to increase/decrease product flows.

- Reformer Section

  - Reactor Optimization - Controls reactor temperature to optimize catalyst life versus octane number of the reactor outlet.

  - Prefractionator Control - Sharpens fractionation so as to minimize catalyst poisoning heavy ends and non-reactable light components in the reactor feed, thereby increasing the reformer's octane-tonne output.

- Desulphurizers

  - H_2/feed ratio control - smooths flow, enhances the desulphurization reaction and extends catalyst life.

- Fluid Cat Cracking (upon FCC completion)

  - Reactor/regeneration optimization - controls reactor/regenerator parameters to optimize the reactions, decrease energy usage and enhance the product split.

One U.S. major refiner who decided to convert all of its refinery process controls to DCS, confirmed that their experience was that it normally took four to twelve months of the new controls operations to recover the DCS/advance controls costs for almost all of the process units converted.

When starting an advance control project, a "process audit" covering those areas that the process control will impact, needs to be made. This audit should show all pertinent data, such as flows, process conditions, energy usage, product quality and stream values. This establishes the baseline. Later, three to four months after the implementation of the advance controls, a final process audit also needs to be taken. This audit collects the same data as that taken for the starting audit. With the data from the

two audits, a final report can be issued showing the actual savings versus the estimated savings and the reasons for any differences. Besides establishing credibility for the project estimate and payout, it also provides the feedback necessary to improve the savings estimating.

Some ideal members of the audit team are the advance control engineer, the process unit's operations engineer and one of the consulting engineers, if used. The refinery will need to establish an advance control group to maintain and troubleshoot existing advance control schemes, evaluate possible future advance controls, design new advance control systems and implement and monitor their installations. With the high degree of savings seen on advance control projects, there is usually a push for their rapid implementation. This push, plus generally a lack of availability of suitable in-house expertise, generally makes it prudent to hire outside expertise. This expertise can be the advance control group of the DCS manufacturer being used (such as a Foxboro or Honeywell) or a consulting firm specializing in advance controls. This provides an opportunity to upgrade the refinery's staffs expertise. An engineer from the advance control group should be assigned to work with and monitor the consultant. On similar later projects, this will normally allow more (or sometimes all) of the same type of control work to be done in-house.

iii. Process Unit Review

a) Light Oil Combination Unit

The light oil combination unit consists of an atmospheric distillation unit, catalytic reformer, diesel HDS, Kerosene HDS and a gas fractionating unit. Their is also an ammonia-based refrigeration section for ethane recovery that is not used. The original capacity of the crude unit was six million mta, it has since been debottlenecked to seven to seven and one-half million mta (about 140 000 to 150 000 bbl/day.)

The two story control building is located about ten meters from the battery limits of the atmospheric crude section of the combination unit. The control room, along with the back of the board area and a control equipment room occupies the upper floor (30 meters long by 15 meters wide and a 5 meter ceiling). The control board is "U" shaped with the sides being about 8 meters long and the base being about 16 meters long. The

board is semigraphic with built-in alarm indicators, about U.S. technology circa mid - 1960's. Overhead lighting is fluorescent with lighting levels below U.S. Standards.

Control is done with the same Soviet built two-pen miniature recorder (15 cm x 17.5 cm), with control on one pen, that we found in all the Kazakhstan refineries. The pneumatic controllers plugged into the back of recorders; PID for temperature loops and PI for all other control loops. Temperature control utilizes thermocouples as sensing devices, potentiometric emf-to-pneumatic converters and pneumatic controllers. Multi-point temperature indicators and multi-point recorders are potentiometric and resemble the old Honeywell "Browns". In front of the control board are three operator consoles containing multi-point temperature indicators, motor ammeters and emergency motor shutdown switches. One console is for the crude unit, one for the reformer/desulphurizers and one for the gas fractionating unit.

The back of the board area is enclosed. The control board tubing is plastic and the electrical wiring utilizes plastic insulated cables. Power is supplied from constant voltage transformers.

The board tubing to field tubing cables splices are neatly mounted and labeled in termination cabinets. Also mounted in this area are two instrument air filters and regulators, one controls while the other is a redundant spare. Behind the back of the board room, there is a control equipment room. In this room are mounted the receiver gauge switches for the alarms, emf-to-pneumatic convertors, analyzers and other auxiliary instruments for the control board.

The process sections are laid out in a row starting with the atmospheric crude, the two desulphurizers, the reformer and ending with the gas fractionation section. Starting at the crude end there is a wide pump alley that extends through all the process sections blending from one to another. Over the pump alley, five meters above the concrete deck is a concrete roof. Mounted on the roof are an acre or two of air coolers and some shell and tube exchangers. On each side of the pipe alley is a row consisting of towers, exchangers, and drums. On the left of the left hand row is a 10 meter wide concrete paved access way. On the other side of that accessway, is the furnace row

containing the furnaces, heaters, waste heat boilers, and the stack.

On the right of the right hand row there is also a ten meter wide access way. On the other side of the access way are buildings. The first building is an electrical substation, then the control building, followed by the compressor building and ending with another substation.

Fireproofing of the columns and vessel skirts is done with brick. All the exchanger, tower, and drum sections have raised curbs around them to contain possible spillage. Fire monitors are mounted five meters in the air usually on a concrete column, with a hand railed platform and a caged ladder leading up to the platform.

The eight electrical desalter drums have their high potential transformer and drum bushings mounted on one side of the drum topside. The high potential wiring is not insulated but the high voltage equipment is roofed over and enclosed with a chain link enclosure with an interlocked door that removes power from the desalter if it is opened. Unit lighting is incandescent in explosion proof fixtures. Lighting levels are well below those found in U.S. refineries. Motor feeds are generally underground while the rest of the electrical wiring is in overhead racks. The electrical cables are non-metallic plastic sheathed. The 380 volt motors have a small rocker-type explosion proof stop/start button. The 6 kV motors have a cast iron pedestal stop/start switch station with an ammeter.

The instrument field installation details approximate those of U.S. major refiners for the mid-1960's except for single process block valves. Pressure gauges are Bourdon tube type, mounted on pigtails but with only single block valves. Local temperature indicators are bi-metallic dial thermometers. For pressure and differential pressure transmitters, close coupling with heat packs and manifold valve mounting is not used but these transmitters are mounted like the old mercury meters at grade in large sheet metal boxes.

The furnace row starts with the crude furnaces followed by a donut shaped waste heat boiler building. Occupying the donut hole is the 160 meter-high concrete stack. For further information on the waste heat boilers see section V C6ai-(a),

Waste Heat Recovery. Right between the desulphurizer furnaces and the waste heat boiler building are the diesel and kerosene desulphurizer reactors. Immediately after the desulphurizer furnaces is the reformer furnace. The reformer desulphurizing reactor is located on the furnaces access way side adjacent to the first furnace box section, which is used to heat the reactor's charge. Immediately following the reformer furnace is the structure holding the three reformer reactors. After the structure is a ten meter wide paved access way and then a side-by-side structure and compressor building. This process section was for ethane recovery but has never been used.

Across from the ethane recovery section next to the pipe alley is the gas fractionation section. Four of the six towers in the section have vertical reboilers. These reboilers are directly or through a short spool piece bolted to the tower nozzles.

b) Heavy Oil Combination Unit

The heavy oil combination unit consists of a four million mta vacuum distillation unit, a visbreaker, a 2.4 million mta gas oil desulphurizer, a 2.0 million mta FCC unit and a gas concentration unit. The Heavy Oil Combination Unit along with the hydrogen unit was brought on stream in 1983.

During our visit to the unit, the outside temperature was minus 31°C (-24°F) and a good number of the operators and maintenance personnel were engaged in keeping the unit from succumbing to the cold weather. The ends of steam and water lines appeared to be particularly vulnerable to the cold. Since there were no steam traps, the line ends were checked, at approximate 15 minute intervals by feeling the line to determine relative temperature. The drain valve was then further opened or closed to bring about the desired temperature change. Some areas had heavy frost build-up from the condensing and freezing of blowing steam from drains. Also, some local areas were noted with 2 to 6 cm of ice on the paving walkways and stairs. No major freeze-up problems were noted.

The control building for the Heavy Oil Combination Unit is located just outside the unit's battery limits. The control room is spacious with a five meter high ceiling. The control board is

"U" shaped with 15 meter sides and a 20 meter width. Into the board, for each of the process units are inserted multiple sections of special panels built by Zntik in Moscow. These special panels are one meter wide and about 2.5 meters high. In the top half meter of each panel are installed six 2-pen pneumatic recorders and a square root scale and linear scale indicator. The next meter down is composed of 6 cm square tiles. Green tiles are used against a black tile background to form a rough graphic of the section of the process being controlled. In appropriate sections of the graphic are pneumatic controller adjustment knobs, manual-auto switches and alarm lights. The FCC takes up five of these panels as does the vacuum distillation unit. Between the unit control panel on the board are mounted multi-point recorders and other miscellaneous instruments. Over the control panels are graphic displays of the units.

The three 4 000 kW regeneration air and the three 3 200 kW wet gas centrifugal compressors are installed in a semi-open building. Condensing steam had parts of the building in a light fog and some of the lines had a frost/ice coating. The compressors were well spaced out with a lot of room to do preventive maintenance. An overhead bridge crane serviced the area. Lighting was incandescent lamps mounted in explosion-proof fixtures and was below the level found in U.S. refineries. The three 2 000 kW reciprocating recycle gas compressors are located in an enclosed heated forced air ventilated building. The compressors are driven by 1 000 rpm, 6 kV powered synchronous motors. The enclosed circulating air is water cooled.

The furnaces observed are bottom fired updraft with gunited interiors, combination burners, induced draft fans and waste heat boilers. The combination burners were using 70 percent gas and 30 percent Heavy Fuel Oil.

The waste water from the unit is collected in one tank. It is then pumped to a tower packed with titanium rashig rings. The waste water is introduced into the upper part of the tower. Water and steam are introduced into the bottom of the tower. The top of the column runs about 90°C (194°F) and the bottom about 80°C (176°F). H_2S is taken off overhead, the small amount is burnt in the flare. Sulphates are dissolved in

the bottom water product which is sent to the biological water treatment system.

The unit superintendent noted that because gasoline was in short supply in Kazakhstan, the FCC is run in the maximum gasoline mode make year round. Also noted, was that the Vacuum Gas Oil Desulphurizer was running at only 60 percent capacity.

c) Crude Station/Pipeline Station

The crude station for the Pavlodar refinery is located about 10 km from the refinery at the main station for the Pavlodar section of the pipeline (P/L) bringing Siberian crude from Omsk, Russia. Within the Pavlodar area there is about 600+ km (373+ miles) of pipeline with four additional stations approximately 130 km (81 miles) apart. The line is cathodic protected, and is pigged twice a year.

The crude station section has three parallel lines, each with filters and a turbine meter for measurement. Crude density is also measured. The pH of the crude is controlled. There is a relatively new permanent mounted prover loop for calibrating the turbine meters. In the crude station control room there is a Schlumberger LT 3065 computer and a Solartron Mass Flow Meter. This "Automotina Moven" automated oil movement system is two years old.

Electrical power is brought to the station on two 110kV overhead transmission lines. At the service entrance, are two 110kV/10kV, 10kV 35 MW transformers. The dual secondary windings feed two 10kV split buses.

The station has eight 20 000 m^3 cone roof crude storage tanks, with flame arresters. The tanks have an elaborate lightning protection system, including 40 meter high towers and 15 meter lightning rods on top of the buildings. There are two water tanks and both are mounded over with earth. This gives freeze protection in the winter and protection from the sun in the summer.

The pumping station is built like the old U.S. pipeline stations, a building with a center wall separating the pumps from the drivers. This allows general purpose electrical equipment to be

used while the pump side is Div. I or Div. II requiring explosion-proof equipment. There are four 3 600 m^3/hour centrifugal pumps with a suction pressure of 7.1 kg/cm^2 (101 psi) and a discharge pressure of 26.5 kg/cm^2 (716 psi). The drivers are 2 500 kW synchronous motor. The pump side is protected by an automatic foam system. Two TV cameras monitor each side.

The P/L station is quite large with offices, workshops and facilities to house the personnel. The administration building contains the equipment for remotely operating the P/L. If the line is damaged their damage control software and equipment will spot the damage site to within one kilometer. There was a small computer center. We observed seven IBM compatible PC's, all with color monitors, with all seven on a network. Variable monitored at the P/L station, include such things as pump flow and pressures, tank level, crude density, etc.

The station can pump over 8 million mta to the Pavlodar refinery and 17 million mta south on the line to Shymkent. The two main items on the stations wish list are:

- An internal P/L inspection system.
- A good new plane to do P/L inspections, their present aircraft flies too fast and is too fuel hungry.

iv. Shops, Spare Parts and Inventory Control

The refineries main shops are located in the SW corner of the refinery. The mechanical shop presently has 220 persons of which 14 are engineers and eight are supervisors. The shop building consisted of:

- A large welding shop. During our visit the shop was bending and welding 2.5 cm diameter 12 meter long pieces of carbon steel tubing while fabricating serpentine coils for the Light Oil Combination Unit's Waste Heat Recovery Units.

- A large blacksmith shop with a good size stress relief furnace (about 3 meters wide by 5 meters long by 3 meters high). Other equipment noted was rollers for bending plate and a sheet metal brake. They were cutting 300 mm diameter blanks out of 5 cm plate to make pipe flanges.

- Good size machine shop. Equipment noted were boring mills, surface grinders, shapers, radial arm drill press and lathes including some with at least 90 cm swings and long beds. They were turning a large long pump shaft on one of the lathes.

- Small shop section for testing and repairing relief valves. It had three pressure testing stations.

- Small shop for fabricating gaskets, seals and "O" rings.

- A very elaborate metalizing unit with vacuum chamber. Besides the normal metalizing metals such as steel, nickel and stainless steel it also allows for metalizing bronze, silver and gold.

- A special lab where welding procedures for alloys are developed. It is equipped to bend and pull apart welding coupons and to radiograph.

There are 140 personnel in the electrical group of which 22 are electrical engineers and 14 are supervisors. The main electrical shop is located in the same building as the mechanical shop. The shop does some armature winding on both 380 volt and 6 kV motors. Most of the winding work is on small random-wound motors. The shop has drying ovens, varnish dip tanks and coil winding facilities. The shop has four female electrical employees doing electrical meter repair. Most of the meters had mechanical jewel bearing type movements such as ammeters, voltmeters, kW meters, VAR meters and Cos Ø (power factor) meters. There was a small caged area where they did hi-pot testing. There was also a one tonne balancing machine, which allow rotors for up to 400 kW motors to be balanced.

During our visit, the outside temperature was minus 31 °C (-24 °F), the armature winding shop was damn cold and nobody was working in it.

The Instrumentation group is composed of 135 people of whom 11 are instrument engineers. Its numbers are divided approximately as follows:

- Central maintenance - about 30

- Unit maintenance - about 70

- Engineers auxiliary - about 30

Controller tuning is done by the instrument engineers and unit technician. Cascade control is used, mostly for furnace transfer line control. No advance controls are used and no DCS's are used for process control. The instrument main shop is located in a two story building and has offices for the instrument group and a small machine shop. It has separate shops for control valve repair, pneumatic recorder and controller repair, pressure and differential pressure repair and electronic repair. There is also a shop for repair and calibration of temperature instruments including potentiometric, thermocouples and RTD's. This shop is equipped with constant temperature baths and two muffle furnaces.

The refinery has a problem obtaining stainless steel and high alloy piping such as furnace and boiler tubes, and plate. Also, spare parts from Russia and the other former parts of the USSR are hard to obtain, with some being impossible. Pump impellers and mechanical seals have been an especially difficult problem. Quality is a very real problem. Parts when received must be inspected to determine if they are fit to use. An inordinate amount of spares must be manufactured by the refinery. The new shop machinery for fabricating "O" rings and seals along with the vacuum metallizer reflect their desperate need to be able to fabricate their own spare parts.

For general information, the following data regarding meteorological data at Pavlodar is included.

METEOROLOGICAL DATA

- Prevailing wind direction southwest, 80 percent of the time.
- Mean wind velocity.
  - Summer - 26 m/sec. prevailing direction southwest, 80 percent of the time.
  - Winter - 26 m/sec. prevailing direction southwest, 80 percent of the time.
- Maximum wind velocity - 151 km/h (42m/sec).
- Design wind velocity - 94 km/h (26m/sec).
- Maximum temperature +42°C.

- Design Maximum Ambient Temperature +27.5°C.
- Design temperature for storage of volatile liquids - minus 37°C.
- Relative humidity.
  - 82 percent for the coldest month.
  - 45 percent for the warmest month.
- Cooling tower design information.
  Maximum allowable cooling water return temperature - plus 45°C.
- Average year rainfall and snowfall - 352 mm.
- Site elevation above sea level 127.00 m.
- Special precautions: sandstorms, temperature inversions.
- Nearest weather station for which statistics are published: Pavlodar.

D. SHYMKENT

1. Summary Description of the Refinery

Our thanks to the following people at Shymkent for their cooperation and assistance during our visit to their refinery.

Serik Zh. Asilbekov	Director
Viktor S. Pak	Chief Engineer
Artur E. Bauman	Chief Technologist
Baurjen Zh. Kusynboev	Deputy Director
Vjatcheslav G. Kosivtsev	Deputy Director
Akilbek E. Tazhibaeu	Chief Economist
Yuri I. Tabakov	Chief Mechanic
Albert R. Zubko	Chief Instrumentation Engineer
Paul A. Gunin	Chief Power Engineer

The John Brown field visit to this facility took place from 1 November to 5 November, 1993.

a. Refinery Descriptions

Shymkent is a major industrial center in South-Eastern Kazakhstan, with a population of around 500 000. Refinery construction began in 1969. The atmospheric crude distillation unit's construction began in 1972, proceeded slowly until 1976, with start-up occurring in 1984.

A segment of the waste water treatment plant (WWTP) was completed in 1978 and was used to clean water for the nearby power station. The tank farm biological and mechanical units for the WWTP were constructed in 1982.

The first crude oil from the West Siberian oil fields was received via pipeline in 1983. At that time the facility began loading crude oil into rail cars for shipment to the Fergana Refinery in Eastern Uzbekistan. In 1984, utility and support systems were completed along with the; steam-air supply, nitrogen station, central condensate station, the air compressor unit and the central plant laboratory. The electric desalters were completed in December of 1984, with the remaining original process facilities completed in 1985 and 1986. Crude processing capacity at that time was six million mta.

The vacuum distillation unit became operational in 1993, but operation is limited due to a steam and electric utility shortfall. The main power station which supplies steam to the refinery is constructing additional facilities to alleviate this problem. The delayed coking unit, which is mechanically complete, has yet to undergo acceptance testing, which is expected to take several months. The additional steam and electrical generation facilities under construction will also be able to support the Delayed Coking Unit.

Table V D1a-1 shows the current refinery configuration, nominal capacity and 1992 production data. The 1992 Product Slate is shown in Table V D1a-2.

The total number of employees at Shymkent is reported to be 1775, with 1585 employed by the refinery. Block flow diagram, figure 2287-22-10-38, depicts the relationship of the respective units within the refinery complex.

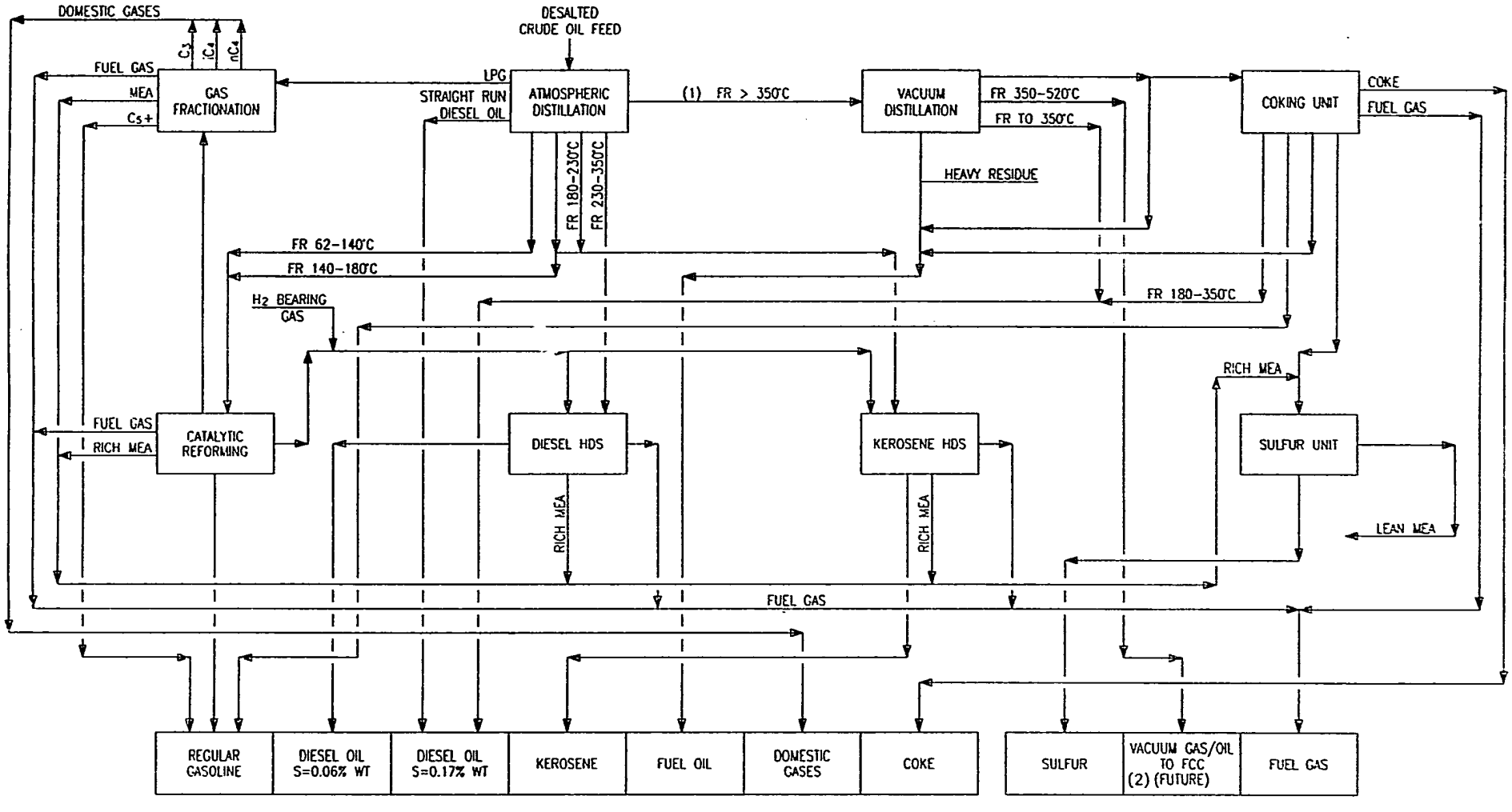

NOTES:

(1) FR = FRACTION
(2) FCC UNIT UNDER CONSTRUCTION, INCLUDING VACUUM GAS OIL DESULFURIZATION, FCC, GAS CONCENTRATION AND HYDROGEN PLANT.

DATE	REV	BY	APPR	DESCRIPTION

JOHN BROWN
CHICAGO ILLINOIS

SHYMKENT REFINERY
REFINERY BLOCK FLOW DIAGRAM

DWG. No. 2287-22-10-38 | A

TABLE V D1a-1
SUMMARY OF OPERATING UNITS AND NOMINAL CAPACITY

UNIT	NOMINAL CAPACITY MTA	START-UP YEAR	1992 PRODUCTION MTA
LIGHT OIL COMBINED UNIT, LK-6U			
Atmospheric Crude Unit 100	7 500 000	1984	6 090 670
Catalytic Reforming Unit 200	1 000 000	1985	1 074 700
Diesel Hydrodesulfurization Unit 300/1	2 200 000	1985	1 613 830
Kerosene Hydrodesulfurization Unit 300/2	600 000	1985	513 480
Gas Fractionation Unit 400	470 000	1986	276 706
Sulfur Plant	5 000[4]	1985	50.9
HEAVY OIL COMBINED UNIT			
Vacuum Distillation	4 000 000	1993[2]	None Reported
Delayed Coking	600 000	[3]	None Reported
FCC[1]	2 000 000	Future	---
Vacuum Gas Oil Hydrodesulfurizer[1]	2 200 000	Future	---
Gas Concentration[1]	1 440 000	Future	---
Hydrogen Plant	10 000	Future	---

(1) Under construction, capacity based on 6 million mta crude throughput
(2) Reported to have operated only four months in 1993, due to limitation of steam and electricity availability.
(3) Unit mechanically complete in 1993; reported to need several months of commissioning before start-up can occur.
(4) The environmental section of this report indicates the existance of two Sulfur Units, one at 5 000 mta, the other at 20 000 mta.

V D1a-2
SHYMKENT REFINERY
SUMMARY PRODUCT SLATE
1992

PRODUCT	QUANTITY - MT
Premium Gasoline	3 972
Regular Gasoline	1 102 761
Diesel - 0.06% S	1 371 576
Diesel - 0.17% S	207 245
Kerosene	503 620
Fuel Oil	2 539 578
LPG	54 931
Sulfur	51
Fuel Gas	125 552
Losses	111 798
Unaccounted for Difference	27 086
TOTAL	6 048 170*

* Crude Feed to Desalter	6 090 670	mta
Desalter Losses	- 42 500	mta
Feed to Unit	6 048 170	mta

b. Crude Oil and Other Feedstock Supply

Crude oil is supplied to the Shymkent refinery via pipeline from the West Siberian oil fields. Additionally, about 10% of the refinery's feed comes from the Kumkol oil fields in central Kazakhstan. The crude oil line size at Shymkent is 1 200 mm in diameter. The crude line continuing to the Chardzhou refinery in Turkmenistan is not complete; it is only partially built. Crude oil storage capacity at Shymkent consists of four tanks with a total capacity of 120 000 cubic meters, or about seven days supply when the refinery is operating at capacity. Crude oil feed stock and waste oil properties, as supplied by the refinery, are shown in Tables V D1b1, 2, 3, and 4. The Oil and Gas Journal, page 82 and 83 of 6 September 1993 also has Assay data relating to these crudes.

The Russians reportedly shut down the crude oil pipelines to Shymkent and Pavlodar during the time of our visit, as a result of international banking transaction issues.

TABLE V D1b-1
SHYMKENT REFINERY
CRUDE OIL PROPERTIES

CRUDE NAME SOURCE (COUNTRY)	WEST SIBERIAN CRUDE OIL BLEND	WEST SIBERIAN CRUDE OIL	KUMKOIL CRUDE OIL
CRUDE INSPECTION			
Density, @ 20°C, kg/m³	834	835.8	813
Sulfur, wt%	0.4	0.42	0.07
Pour Point, °C	-15	-17	+10
Viscosity, cs at 20 °C	6.7	6.37	3.71 cs at, 50°C 7.14 cs at, 30°C
Conradson Carbon, wt%	2.8		1.08
Metals, Ni + Va, PPM	---		Ni-4.6 ppm Va-0.2 ppm
GASOLINE, (C_5 -180 °C)			
Yield, wt%	22	---	---
Sulfur, wt%	0.01	---	---
Octane	76.0	---	---
Density, @ 20°C, kg/m³	728	---	---
LIGHT GAS OIL, (180 - 350°C)			
Yield, wt%	3.15	---	---
Density, @ 20°C, kg/m³	872	---	---
Sulfur, wt%	0.62	---	---
Pour Point, °C	+17	---	---

TABLE V D1b-1
SHYMKENT REFINERY
CRUDE OIL PROPERTIES

CRUDE NAME SOURCE (COUNTRY)	WEST SIBERIAN CRUDE OIL BLEND	WEST SIBERIAN CRUDE OIL	KUMKOIL CRUDE OIL
HEAVY GAS OIL, (350 - 520°C)			
Yield, wt%	46.4	---	---
Density, @ 20°C, kg/m^3	890	---	---
Sulfur, wt%	0.6	---	---
Viscosity, cs at 50 °C	26.47	---	---
RESIDUUM, (520°C PLUS)			
Yield, wt%	49.05	---	---
Density, @ 20°C	978	---	---
Viscosity, cs at 60°C	180	---	---

TABLE V D1b-2
SHYMKENT REFINERY
WEST SIBERIAN CRUDE OIL SPECIFICATION 37.8° API

CHARACTERISTICS	CRUDE OIL	GAS C_1-C_4	GASOLINE 62-180°C	KEROSENE 120-250°C	DIESEL OIL 180-350°C	MAZUT >350°C
Distillation, wt%	---	1.4	22.44	25.42	32.06	43.75
Density, g/cm³	0.8358	---	0.728	0.787	0.839	0.934
Total Sulfur, wt%	0.42	---	0.01	0.02	0.2	0.9
Mercaptan Sulfur, ppm	---	---	---	None	---	---
Octane Number (MON)	---	---	54	---	---	---
Freezing Point, °C	-17	---	---	---	-14	+19
Temperature of Turbidity, °C	---	---	---	---	-3	---
Crystallization Point, °C	---	---	---	-55	---	---
Aromatics, %	---	---	8.5	16	---	---
Paraffins, %	---	---	54	---	---	---
Naphthenes, %	---	---	37.5	---	---	---
Resins, mg	---	---	None	None	5.0	---
Aniline Point	---	---	---	63.9	---	---
Cetane Rating	---	---	---	---	59	---
Viscosity at 20°C, cs	6.37	---	---	1.38	4.94	---
Viscosity at 50°C, cs	3.67	---	---	---	---	---
Acidity $\frac{mg\ KOH}{100\ cm^3}$	0.78	---	None	0.49	0.17	---

V D1b-3
SHYMKENT REFINERY
KUMKOL CRUDE OIL SPECIFICATION

CHARACTERISTICS	CRUDE OIL	GAS C_1 - C_4	GASOLINE 62-180°C	KEROSENE 120-240°C	DIESEL OIL 180-350°C	MAZUT >350°C
Distillation, wt%		1.7	24.0	18.5	29.6	44.4
Density, g/cm³	0.813	—	0.729	0.7742	0.8093	0.9048
Total Sulfur, wt%	0.07	—	0.007	0.023	0.037	0.16
Mercaptan Sulfur, ppm	—	—	—	None	None	—
Octane Number (MON)	—	—	56	—	—	—
Flash Point, °C, Open Cup	15	—	—	—	84	237
Flash Point, °C, Closed Cup	-35	—	—	>28	—	—
Freezing Point, °C	10	—	—	—	-3	+40
Temperature of Turbidity, °C	—	—	—	—	0	—
Crystallization Point, °C	—	—	—	-48	—	—
Aromatics, wt%	—	—	8.1	<22	—	—
Paraffins, wt%	—	—	30.9			
Naphthenes, wt%	—	—	61.0	—	—	—
Aniline Point, °C	—	—	—	65	—	—
Cetane Rating	—	—	—	—	62	—
Viscosity at 20°C, cs	—	—	—	1.41	4.16	—
Viscosity at 30°C, cs	7.14	—	—	—	—	—
Viscosity at 50°C, cs	3.71	—	—	—	—	3.34 at 80°C
Acidity $\frac{Mg\ KOH}{100\ cm^3}$	0.05	—	0.27	0.7	1.13	—
Coking Capacity, %	1.08	—	—	—	—	2.32
Height of Nonsmoking Flare, mm	—	—	—	29.1	—	—
Asphaltenes, %	traces	—	—	—	—	—
Silica Gel Resins, %	10	—	—	—	—	—
Paraffins, %	15	—	—	—	—	—

V D1b-3
SHYMKENT REFINERY
KUMKOL CRUDE OIL SPECIFICATION

CHARACTERISTICS	CRUDE OIL	GAS C_1 - C_4	GASOLINE 62-180°C	KEROSENE 120-240°C	DIESEL OIL 180-350°C	MAZUT >350°C
Distillation, wt%		1.7	24.0	18.5	29.6	44.4
Paraffins Melting Point, °C	49	—	—	—	—	—
Vanadium, micro -g/g	0.2	—	—	—	—	—
Nickel, micro -g/g	4.6	—	—	—	—	—
Nitrogen, %	0.1	—	—	—	—	—
Oxygen, %	0.18	—	—	—	—	—

TABLE V D1b-4
SHYMKENT REFINERY
WASTE OIL SPECIFICATIONS

DISTILLATION, °C	1988 VOL %	1991 VOL %
IBP-62	1.40	0.49
62-70	2.18	1.68
70-80	3.45	2.28
80-90	6.81	3.17
90-100	7.48	4.63
100-110	8.27	6.40
110-120	9.01	8.70
120-130	9.62	11.36
130-140	10.20	14.90
140-150	11.45	16.99
150-160	13.42	20.55
160-170	15.13	24.21
170-180	16.81	28.66
180-190	19.77	31.41
190-200	21.16	34.97
200-210	22.08	38.33
210-220	23.10	41.79
220-230	25.86	44.55
230-240	29.02	47.15
240-250	33.86	48.61
250-260	38.48	50.21
260-270	41.72	52.27
270-280	44.07	54.64
280-290	46.50	56.10

TABLE V D1b-4
SHYMKENT REFINERY
WASTE OIL SPECIFICATIONS

DISTILLATION, °C	1988	1991
	VOI %	VOL %
290-300	49.28	57.75
300-310	52.43	58.99
310-320	56.06	61.39
320-330	59.58	64.47
330-340	62.41	65.73
340-350	65.07	68.23
350-360	67.76	71.30
360-370	70.47	76.34
370-380	72.64	---

c. Impact of Crude Oil Changes

Kazakhstan is considering construction of a pipeline from their Western Oil fields, connecting to the existing pipeline from Siberia, (at the Kumkol oil field) to bring crude oil to the Shymkent and Pavlodar refineries. It is reported that fruition of this plan is five to seven years in the future. As this concept comes closer to reality, we suggest that Refinery Simulation Studies be performed in order to optimize an effective mix of crudes and identify equipment bottlenecks. It is likely that different crude characteristics will result in changes in product rates and quality, with resultant modifications to equipment sizes and configuration.

For example, both the Shymkent and Pavlodar Refineries were originally designed to process a 0.856 gravity, 1.15 wt% sulfur, Western Siberian crude and now run a 0.84 gravity, 0.40 wt% sulfur, blend of West Siberian and Kazakhstan Kumkol crudes. (Original crude specifications may be found in the Pavlodar section of this report). Shymkent reports that they now produce only 70% of the diesel oil (compared to the original design), as a result of the change in crude oil characteristics.

2. Description of Process Units

a. Crude Unit

The crude unit was originally rated at 6 million mta, and began operation in 1985. Modifications to this unit began in 1987, were completed in 1992, and capacity is now reported to be 7.5 to 8 million mta. Neutralizing additives, such as sodium hydroxide are not used, as the pH is reported at a value of six to seven. They have in the past, injected ammonia hydroxide into the overhead of the pre-flash and atmospheric column. Top of crude column pressure in summer months is reported as 1.2 to 1.3 kg/cm^2 and 0.9 kg/cm^2 in the winter. The higher pressure in summer is used to compensate for high summer temperatures in order to condense as much overhead gas as possible. Summer ambient air temperatures are reported to reach 45°C and the crude unit reflex drum reaches 40°C. Feed rates in the summer are reduced to minimize vaporization losses due to this problem.

Operating rates are 800 cubic meters per hour in June, July, and August and 1 100 cubic meters per hour in cooler times. Operating flexibility is stated to be 60 to 110% of design operating rate, although these limits have not been tested.

Although side-cut strippers, with provision for steam injection exist for all crude unit side draws, diesel oil is the only product that is steam

stripped. Stripping steam quality, for the atmospheric column and diesel oil, is 5 kg/cm^2 at 420°C. Steam is superheated by heat exchange with flue gas from the crude unit heaters.

The crude unit consists of eight electric desalter vessels in a multi-stage parallel flow configuration, a heat exchange train, a pre-flash column, fired furnaces (2), the crude atmospheric column and three side cut strippers and a Naphtha stabilizer with a fired reboiler.

The crude charge pump maximum pressure is listed as 25 kg/cm^2, with temperature/pressures of 120°C/14.0 kg/cm^2 at the first stage of desalting and 115°C/12.5 kg/cm^2 at the second stage of desalting. At this point, the refinery staff observed that during construction, the crude charge pump was selected from what was available at the time, its characteristics did not necessarily match process unit design operating conditions.

The pre-flash column inlet temperature varies between 210°C and 250°C, with a nominal inlet to the crude unit furnaces of 240°C. The atmospheric column fired heater outlet design is 370°C, actually running at 360°C. The 240°C inlet to the crude furnace is at design, which is the first heat exchange train system of 14 Central and Eastern European and CIS Refineries evaluated by the John Brown team, that have not reported a significant shortfall between design and actual fired heater inlet temperature. Our compliments to the Shymkent Operating and Engineering staff. This does not mean that improvements are not possible, we do recommend process analysis and review of heat exchanger cleaning/fouling issues.

Cooling water exchangers are reported to have a fouling problem; the refinery is working on both means to clean salts from the existing units, as well as eliminate the salts causing the fouling. Other modification activities include optimization of the light end recovery system and improving (decreasing) crude column product overlaps. Table V D2a-1 shows the Atmospheric Distillation Unit intermediate product specification while Tables V D2a-2 through 4 provides material balance information.

TABLE V D2a-1
SHYMKENT REFINERY
SUMMARY FEED/PRODUCT SPECIFICATIONS
INTERMEDIATE PRODUCTS
ATMOSPHERIC DISTILLATION UNIT

	FEED		PRODUCTS			
PROPERTY	CRUDE OIL	DESALTED CRUDE OIL	GASOLINE 62 - 180°C	KEROSENE 140 - 230°C	DIESEL 180 - 350°C	MAZUT HEAVY FUEL OIL
Density $^{20}/_{4}$, g/cm^3	0.832	---	---	---	---	---
Chlorides, mg/l	39.65	4.40	---	---	---	---
Water, wt%	0.48	0.08	---	---	---	---
Distillation						
IBP - °C			62	141	184	---
10% - °C			87	160	217	---
50% - °C			109	180.5	274	---
90% - °C			144	208.3	341.4	---
96% - °C			---	---	358	---
98% - °C			---	228	---	---
FBP - °C			169	---	---	---
Distilled %, Vol			98	---	---	---
Flash Point, °C			---	34	70	184
Sulfur, wt%			0.01	0.02	0.21	0.8

TABLE V D2a-2
MATERIAL BALANCE
ATMOSPHERIC DISTILLATION UNIT (UNIT 100)
DESALTING SECTION 1992 AVERAGE

Working days/336 year

	WT%	MTA
DESALTNG OF CRUDE OIL BLOCK		
INLET:		
Crude Oil Blend	99.30	6 048 170
West Siberian Crude Oil	(98.48)	(5 998 343)
Gas Condensate	(0.82)	(49 827)
Slops (from cleaning)	0.7	42 501
TOTAL	100.0	6 090 671
OUTLET:		
Desalted Crude Oil	99.03	6 031 681
West Siberian Crude Oil	(98.22)	(5 981 977)
Gas Condensate	(0.81)	(49 701)
Slops	0.7	42 501
Losses	0.27	16 489
TOTAL	100.0	6 090 671

TABLE V D2a-3
ATMOSPHERIC DISTILLATION UNIT (100)
1992 MATERIAL BALANCE

	WT%	MTA
ATMOSPHERIC DISTILLATION BLOCK		
INLET		
West Siberian Crude Oil	99.2	5 998 343
Gas Condensate	0.8	49 827
TOTAL	100.0	6 048 180
OUTLET		
LPG After Stabilizer	3.52	212 941
Straight Run Naphtha	17.77	1 074 719
Straight Run Jet Fuel Fraction	8.28	501 059
Straight Run Diesel Oil	26.68	1 613 829
Straight Run Kerosene	0.21	12 424
(Total Lt. Products)	(56.46)	(3 414 972)
Heavy Fuel Oil (Mazut)	41.99	2 539 578
Lt. Ends (Hydrocarbon Gases)	0.44	26 372
Losses	1.11	67 248
TOTAL	100.0	6 048 170

- 9 -

TABLE V D2a-4
MATERIAL BALANCE
VACUUM DISTILLATION UNIT

INLET:	PROJECTED	ACTUAL
Feed	100% wt Mazut including fraction < 350°C (6.5%)	100% wt
OUTLET	**PROJECTED**	**ACTUAL**
Fraction < 350°C	2.5 wt%	2.0 wt%
Vacuum Gas Oil	52.8 wt%	46.6 wt%
Heavy Gas Oil	3.0 wt%	2.6 wt%
"Guydron"; Vac. Unit Bottoms	41.2 wt%	48.0 wt%
Losses	0.5 wt%	0.8 wt%
TOTAL	100.0	100.0

b. Catalytic Reformer

The Catalytic Reformer is part of the LK-6U combined unit, and is rated at 1 000 000 mta input capacity. Material Balance, feedstock and product specifications are as shown in Tables VD2b-1, 2 & 3.

Operating flexibility, with respect to feed to the pre-treatment section, is between 140 to 174 m^3/hr (measured at 20°C) and between 160 to 199 m^3/hr reformer feed (measured at 200°C). Nominal operating rates are 140 m^3/hr to pre-treatment and 153 m^3/hr to the reformer. Reformer design operating pressure is 34 kg/cm^2 at 490°C; current operating pressure is 29 kg/cm^2.

The Reformer Catalyst is the Soviet AP-64, of aluminum-platinum; pre-treatment catalyst is of aluminum, cobalt, and molyboimum. These catalysts have been in use since start-up in 1985. The current regeneration process occurs once a year with a one week duration. According to local standards, the AP-64 life expired in 1991. The refinery staff is reviewing catalyst replacement proposals from western firms, which would provide an improvement in yield and catalyst life, compared to the AP-64 material now in use.

Additionally, the Technical Institute has suggested use of another Soviet catalyst. The refinery is leaning toward UOP R-56. The value of the platinum in the spent catalyst is sufficient to pay for replacement western catalyst, transportation changes and return a profit to the refinery.

With respect to capacity, the system is in balance at one million mta feed to the unit. If, however, the crude oil throughput reaches eight million mta, which the refinery believes is possible, the catalytic reformer is reported to be undersized by 600 000 mta.

A portion of the Straight Run Naphtha is exported. Aromatic content of the gasoline is reported to be in the 45 to 52% range, with benzene running at 5 to 6% (compared to 1% or less in the U.S. gasoline formulation). TEL is not used to enhance octane rating. Gasoline product is subject to analysis three times a month.

TABLE V D2b-1
CATALYTIC REFORMER UNIT - (UNIT 200)
MATERIAL BALANCE
(AVERAGE FOR 1992)

Working Days/333

	WT%	MTA
INLET:		
Straight Run Naphtha	99.1	945 635
Naphtha From Kerosene Hydrotreating Unit (Number 300/2)	0.2	2 258
Naphtha From Diesel Oil Hydrotreating Unit (Number 300/1)	0.7	6 682
TOTAL	100	954 575
OUTLET:		
Premium Gasoline	0.4	3 972
Reformate	81.6	778 737
Hydrogen	3.6	34 893
Lt. Ends (Hydrocarbon Gases)	5.6	53 463
LPG	6.7	63 766
Losses	2.1	19 744
TOTAL	100	954 575

TABLE V D2b-2
CATALYTIC REFORMER (Unit 200)
FEED/PRODUCT SPECIFICATIONS

PROPERTY	FEED 62-180°C CUT	HYDROTREATED NAPHTHA	STABILIZED GASOLINE COMPONENT
Density $^{20}/_{4}$ - g/cm^3	0.730	N/A	0.754
Distillation			
IBP - °C	73	74	59
10% - °C	87	95	78
50% - °C	109	109	105
90% - °C	145	141	150
FBP - °C	171	163	178
Naphthenes, %	31.9	33.1	4.9
Aromatics, %	9.0	10.6	50.6
Paraffins, %	59.1	56.3	44.5
Sulfur, %	0.01	0.000069	---
Octane/Nr, MON	50.2	---	77.3

TABLE V D2b-3
CATALYTIC REFORMER (Unit 200)
PROPERTIES OF GAS STREAMS

PROPERTY	HYDROGEN FROM DESULFURIZER REACTOR[3] SEPARATOR	LIGHT GASES FROM MEA SCRUBBER	HYDROGEN RECYCLE	PRODUCT STABILIZER OVERHEAD RECEIVER LIQUID[1][2]	PRODUCT STABILIZATION OVERHEAD RECEIVER GAS[2]
CHEMICAL COMPOSITION VOL %					
N_2	---	2.22	---	---	0.33
C_1	8.69	33.68	7.61	0.26	32.65
C_2	1.23	10.90	1.56	1.14	14.42
C_3	0.33	10.67	1.19	21.04	26.28
iC_4	0.20	2.83	0.39	41.28	12.43
nC_4	0.51	2.51	0.30	---	6.32
iC_5	0.01	0.28	0.05	---	0.17
nC_5	---	0.16	---	---	---
ΣC_6	---	---	---	---	---
Density g/cm^3	0.174	0.824	0.202	---	1.439
H_2S, vol%	Negative	Negative	---	---	---
Hydrogen, vol%	89.37	36.75	88.9	---	7.40

(1) Data As Reported - Does not add to 100%.
(2) These streams flow to the Gas Fractionation Unit, No. 400.
(3) This stream flows to the Kerosene Hydrodesulfurizer Unit.

c. Other Units

The refinery reports the number of rail cars that can be loaded simultaneously as follows:

- 30, for gasoline and heavy fuel oil
- 60, for kerosene, diesel, jet fuel

Loading rack velocities are:

- 7.8 meters/sec., gasoline
- 9.6 meters/sec., kerosene, diesel, jet fuel
- 9.8 meters/sec., heavy fuel oil

Note that the term "jet fuel" was taken by refinery staff to mean "military jet fuel", it does not necessarily refer to commercial jet fuel.

Chemical consumption, nominal rates, for a crude throughput of 7 000 000 mta, is reported as follows:

• De-emulsifier	93 mta
• Sodium Hydroxide	4 mta
• Calcium Hydroxide	7 mta
• MEA	30 mta

1992 operating material balances for the other refinery operating units are as shown in tables VB2c-1 through 5.

The vacuum unit, rated at 4 million mta, was recently completed in 1993, and at the time of our visit in November 1993 was not operating. It did however, run for four months in 1993. The delayed coker is reported to be mechanically complete, with only a few months of commissioning and start-up required to be fully operational.

There is, however, a utility shortfall at present, and there is insufficient steam and electricity to operate the vacuum unit, let alone the vacuum unit and coker, when the other plant facilities are running. The steam and electric power station is reportedly erecting new units to overcome this shortfall. Completion is ambiguously reported to be "in time for the FCC and coker units."

In 1993, the kerosene hydrotreater is reported to have been shut down; as current regulatory product sulfur levels were being satisfied. The diesel hydrotreater as well as the entire facility was originally designed based on a different crude oil than is now processed. As a result, at crude unit capacity, feed to the Diesel HDS Unit is 70% of design. Based on 0.45% wt. sulfur in the crude oil, the Diesel Hydrotreater can produce 0.05% wt. sulfur at a 94% yield, according to refinery estimates. Actual sulfur levels of the 0.06% sulfur diesel were reported to be between 0.06 and 0.10% wt.

The sulfur plant is normally not operated and has not in the last three years, as the sulfur levels in the incoming crude is low. High H_2S content gas is now sent to flare, since the sulfur plant is designed for a feed rate of 800 to 1150 m^3/hr, and only 150 m^3/hr is currently available.

TABLE V D2c-1
MATERIAL BALANCE (UNIT 400)
GAS-FRACTIONATION UNIT
AVERAGE FOR 1992

Working Days/Year - 334

	WT%	MTA
INLET:		
LPG From Atmospheric Distillation Unit	76.96	212 941
LPG From Catalytic Reformer Unit	23.04	63 766
TOTAL	100.00	276 707
OUTLET:		
Propane/Butane	19.85	54 931
C_6 Plus	70.45	194 940
Hydrocarbon Gases	6.55	18 114
Losses	3.15	8 722
TOTAL	100.00	276 707

TABLE V D2c-2
KEROSENE HYDROTREATING UNIT (UNIT 300/2)
1992 MATERIAL BALANCE

Working Days/Year - 319

	WT%	MTA
INLET:		
Straight Run Fraction for Jet Fuel	99.27	496 455
Hydrogen from Catalytic Reformer Unit	0.73	3 630
TOTAL	100.00	500 085
OUTLET:		
Jet Fuel	97.30	486 592
Lt. Ends (Hydrocarbon Gases)	1.39	6 915
Naphtha	0.45	2 258
H_2S	0.04	190
Losses	0.82	4 130
TOTAL	100.00	500 085

TABLE V D2c-3
DIESEL OIL HYDROTREATING UNIT
(UNIT 300/1)
1992 MATERIAL BALANCE

Working Days/Year - 296

	WT%	MTA
INLET:		
Straight Run Diesel Oil From Unit 100	99.58	1 445 176
Hydrogen from Catalytic Reformer Unit	0.42	6 104
TOTAL	100.00	1 451 280
OUTLET:		
Hydrotreated Diesel Oil (Sulfur < 0.2 wt%)	2.66	38 592
Hydrotreated Diesel Oil (Sulfur = 0.06 wt%)	94.51	1 371 576
Naphtha	0.46	6 682
Lt. End (Hydrocarbon Gas)	1.43	20 688
H_2S	0.12	1 822
Losses	0.82	11 920
TOTAL	100.00	1 451 280

TABLE V B2c-4
SULFUR UNIT
1992 MATERIAL BALANCE

Working Days/Year - 14

	WT%	MTA
INLET:		
H_2S	100.00	84.9
TOTAL	100.00	84.9
OUTLET:		
Sulfur	59.95	50.9
Losses	40.05	34.0
TOTAL	100.00	84.9

TABLE V B2c-5
MATERIAL BALANCE (PROJECT)
DELAYED COKING UNIT

FEED	WT%	MTA
Feed - "Guydron"[1]	100%	600 000
PRODUCTS		
Coking Gas	12.2%	72 800
Gasoline (C pentane to 180°C)	12.7	76 400
Light Gas Oil (180 to 300°C)	28.3	169 800
Heavy Gas Oil (> 300°C)	21.9	131.4
H_2S in MEA	1.1	6 800
Coke	22	132 000
Losses	1.8	10 800
TOTAL	100.00%	600 000

[1]Vacuum Unit Bottoms

The Gas Fractionation Unit 400, with a design capacity of 400 000 mta, does have facility to scrub and remove H_2S with MEA, but is not operated due to H_2S levels considerably lower than design. Refer to the overall sulfur balance in the environmental section of this report for comments relating to resultant SO_2 emissions.

Future plans call for addition of a visbreaker, polyproplyene unit and plastics plant. Crude oil storage capacity is 120 000 m^3 in 4 tanks, or 7 days supply at capacity. The refinery has plans to add and change tankage configuration concurrent with the FCC complex construction. Diesel and gasoline product are exported to Tashkent in Uzbekistan via pipeline, other products are transported by railroad car and truck in the Shymkent Region and to Almaty.

PROPOSED FLUID CATALYTIC CRACKER COMPLEX

Several years ago, (1987) the refinery began construction of a two million mta FCC and associated units. With the break-up of the former Soviet Union, work was stopped, and only minimal construction activity

has taken place since. In late 1993, the refinery,and Kazakhstanmunaygaz entered into a contract with a U.S. firm to complete the project utilizing western (UOP) technology. The full complex when completed, will consist of a Vacuum Gas Oil Desulfurizer, the FCC Unit, a Gas Concentration Plant, a Hydrogen Plant, and in the future a MTBE Unit.

The completion of the FCC Complex is strongly recommended. When refinery economics are viewed based on a world price basis, as per the following example, it can be seen that refinery profitability increases.

The following chart shows, on a world price basis, using a very simplistic financial model, the difference in cash flow between Shymkent as it is now and as it could be with an Operating FCC Unit.

At 7.5 million metric tonnes per year, and taking Crude Oil at $100 per metric tonne and taking operating cost at 10% of total, the operating cost at Shymkent would be 830 million dollars per year.

PRODUCT	CURRENT CASE			CASE WITH FCC[3]	
	QUANTITY MTA	VALUE $/MT[1]	REVENUE MILLION $	QUANTITY MTA	REVENUE MILLION $
LPG, Fuel Gas	232 500	100 [2]	23.25	627 000	62.70
Gasoline	1 402 500	170	238.43	2 794 000	474.98
Kerosene	637 500	175	111.56	450 000	78.75
Diesel, Heating Oil	2 002 500	165	330.42	2 024 000	333.96
Heavy Fuel Oil	3 225 000	70	225.75	1 605 000	112.35
TOTAL	7 500 000		929.41	7 500 000	1 062.74

[1]From Platts oil gram, November, 1993, Mediterranean Area.
[2]U.S. Natural Gas Heating Value Equivalent.
[3]The conversion shown is approximate and will vary in actual operating conditions.

d. Product Specifications

Specifications are shown in tables VD2d-1 through 5 for the following products:

- Liquified Petroleum Gases (LPG)
- Gasoline
- Jet Fuel
- Diesel
- Fuel Oil

TABLE V D2d-1
LPG (LIQUEFIED PETROLEUM GASES)
SPECIFICATIONS

COMPOSITION	PROPANE	BUTANE	LPG
Vapor Pressure at 38°C	---	0.82	0.99
Composition, Liq. Vol.% (Max)	---	$\Sigma C_1C_2 = 0.86$ $C_3 = 34.97$	$\Sigma C_1C_1 = 2.6$ $\Sigma C_3 = 53.3$
Butane and Heavier, Liq. Vol.% (Max)	---	$\Sigma C_4 = 64.17$	$\Sigma C_4 = 44.1$
Pentane and Heavier, Liq. Vol.% (Max)	---	---	---
Residual Matter	---	None	None
Mecaptan Sulfur, wt%	---	0.001	0.0001
Moisture Content	---	---	---
Free Water Content	None	None	None
Bottled at Refinery	No	No	No

TABLE V D2d-2
GASOLINE SPECIFICATIONS

TYPE	A-76 REGULAR	SPECIFICATION STANDARD
Density @ 20°C, g/cm³	0.729	---
Octane Number		
MON	Not less 76.0	Not less 76
Distillation Volume		
10%	60°C	Not more 70
50%	93°C	Not more 115
90%	144°C	Not more 180
EP	174°C	Not more 195
Distillation Residue, wt%	1	---
RVP	380	Not more 500 mm Hg
Sulfur Content, wt%	0.01	Not more 0.02
MTBE Content, vol%	---	---
TEL Content (if any)	Not used	---
Naphthenes, wt%	3.66 to 9.64	
Aromatics, wt%	45 to 52	

TABLE V D2d-3
JET FUEL (AVIATION FUEL)
SPECIFICATIONS

TYPE	JET FUEL	SPECIFICATION STANDARD
Density @ 20°C g/cm³	0.785	Not less 0.775
Distillation, Volume		
IBP	147°C	Not less than 135°C
10%	159°C	Not more than 155°C
50%	180°C	Not more than 175°C
90%	208°C	
EP	227°C	Not more than 280°C
Distillation Residue, wt%	---	---
Viscosity @ 20°C, cs	1.36	Not less than 1.25
Aniline Point °C	---	---
Freeze Point °C	-55	Not more than -60
Flash Point °C	38	Not less than 28
Total Sulfur, wt%	0.02	Not more than 0.25
Mercaptan, wt%	None	Not more than 0.001
Aromatic Content, vol%	15	Not more than 22
Copper Strip	Satisfied	
Smoke Point	25.4	
Resins, mg/100 ml	None	
Net Heat of Combustion kJ/kg	43 281	Not more than 43 120

TABLE V D2d-4
DIESEL FUEL SPECIFICATIONS

TYPE	DLECH-V	DL-02-61
Density @ 20°C, g/cm³	0.832	0.836
Distillation Volume		
50%	277°C	273°C
94%	---	340°C
96%	360°C	---
Viscosity @ 20°C, cs	4.61	4.88
Pour Point °C	-11	-2
Flash Point °C	73	68
Sulfur Content, wt%	0.06	0.17
Carbon Residue	0.024	0.022
Ash	None	None
Water and Sediment, vol%	None	None
Corrosion Copper Strip	Satisfied	Satisfied
Cetane Number, Min.	50	49

TABLE V D2d-5
FUEL OIL SPECIFICATION

TYPE	MAZUT, M-100[1]
Density @ 20°C, g/cm³	0.927
Distillation Volume	
10%	---
90%	---
Viscosity @ 20°C, cs	35
Flash Point °C	186
Pour Point °C	+25
Sulfur, wt%	0.89
Carbon Residue % (on 10% bottoms)	---
Ash, wt%	0.03
Corrosion, Copper Strip	---

[1] Mazut = Heavy Fuel Oil.
Heating value reported at 9 650 kcal/metric tonne

3. Utility Services and Off Sites

a. Utility Consumption

Table V D3a-1 shows utility consumption for the 1992 operating year, while Table V D3a-2 provides data regarding consumption of chemicals and catalysts.

TABLE V D3a-1
1992 UTILITIES CONSUMPTION
SHYMKENT

	THROUGHPUT THOUSAND MTA	OPERATING DAYS	STEAM		FUEL		ELECTRICITY THOUSAND KWH	AIR THOUSAND NORMAL CUBIC METERS	NITROGEN THOUSAND NORMAL CUBIC METERS
			GCAL	MT	FUEL GAS MT	FUEL OIL (MAZUT) MT			
Atmospheric Distillation Unit	6 048.17	336	183 573	262 247	80 137	17 484	36 475	6 191	—
Vacuum Distillation Unit	NOT IN OPERATION								
Kerosene Hydrodesulfurizer Unit	500.09	319	3 222	4 603	5 847	1 388	7 088	5 134	2 580
Diesel Oil Hydrodesulfurizer Unit	1451.28	296	32 855	46 936	16 597	4 507	9 261	4 662	2 850
Catalytic Reforming Unit	954.58	333	176 191	251 701	44 413	11 642	9 367	4 964	3 104
Gas Fractionating Unit	276.71	334	3 541	5 059	—	—	5 847	3 325	1 659
Sulfur Plant	84.9	14	N/A	N/A	N/A	N/A	N/A	N/A	N/A
TOTAL	—	—	399 382	570 546	146 904	35 021	68 038	24 276	10 193

TABLE V D3a-2
NAMES AND MONTHLY (AVERAGE) CONSUMPTION QUANTITIES
OF VARIOUS CHEMICAL/TREATING, PROCESS CORROSION INHIBITORS, ETC.) AND CATALYSTS

CHEMICALS	(3)	CONSUMPTION					
		ATMOSPHERIC DISTILLATION UNIT	CATALYTIC REFORMER UNIT	HDS DIESEL OIL UNIT	HDS KEROSENE UNIT	GAS FRACT. UNIT	TOTAL
De-emulsifier	T/month (KG/T Feed)	7.3 (0.02)	—	—	—	—	7.30
Caustic Soda	T/month (KG/T)	3.34 (0.01)	—	—	—	—	3.34
Calcined Soda	T/month (KG/T)	0.63 (0.002)	—	—	—	—	0.63
Ammonia Water	T/month (KG/T)	0.79 (0.002)	—	—	—	—	0.79
MEA	T/month (KG/T)	—	0.35 (0.007)	1.59 (0.024)	0.15 (0.011)	0.25 (0.016)	2.34
Dichloroethane	T/month (KG/T)	—	0.28 (0.005)	—	—	—	0.28
CATALYSTS:							
GO-70	T(4)	—	—	43.48 From 1989	—	—	43.48
GS-168 SHTU-2	T	—	—	13.4 From 1985	—	—	13.4
AL-Ni-Mo	T	—	—	—	7.2 From 1985	—	7.2
AL-Co-Mo (HDS)	T	—	48.0 From 1985	—	—	—	48.0
AP-64 (Cat. Ref.)	—	—	78.7 From 1985	—	—	—	78.7

NOTES:
1. There are no gasoline additives such as MTBE, TEL.
2. There are no lube oils, therefore, there are no additives for lube oils.
3. T= metric tonnes
4. Catalyst quantities shown are charge amounts - dates shown are year of initial charge and thus reflects age of catalyst.

b. Fuel System

Table V D3b-1 indicates composition of the refinery fuel gas. All refinery burners are of the combination type and generally burn a 70/30 mixture of gas and heavy fuel oil. The vacuum unit uses a 50/50 mixture of gas/heavy fuel oi. No natural gas is used, although it does exist at the nerby electric power station.

Both the fuel gas and heavy fuel oil are distributed in the refinery through a "closed" ring system. A unit will preferentially burn its own gas, with the excess flowing to the "ring", thus the differing compositions shown in Table V D3b-1.

TABLE V D3b-1
REFINERY FUEL GAS COMPOSITION
SHYMKENT

COMPONENT	FOR CATALYTIC REFORMER	FOR ATMOSPHERIC DISTILLATION UNIT
N_2	35.1	---
H_2	42.0	---
C_1	20.4	71.52
C_2	0.2	3.43
C_3	0.7	7.4
C_4	---	12.68
iC_4	0.5	---
hC_4	0.8	---
C_5	---	2.08
iC_5	0.2	
hC_5	0.1	
TOTAL	100.00	97.11*

*As Reported

Average calorific heating value of the atmospheric unit fuel gas is reported to be 11 500 kcal/kg.

Fuel gas pressures vary from 3 kg/cm^2 to a maximum of 6 kg/cm^2. Pressure at the furnaces is 1.2 to 1.5 kg/cm^2. Excess gas is routed to the flare. The safety relief valve system also vents to the flare. Note that there is a special flare for H_2S bearing gases.

Heavy fuel oil is pumped via steam traced pipeline to the power station, a distance of 7 km.

c. Steam System

i. Steam Generation, Balance and Utilization

The refinery does not have a power station. Stream is both purchased from the district power station and generated in the refineries waste heat boilers. About half the normal 90 mt/hour refinery steam demand is purchased with the other half being generated in the waste heat boilers.

The district power station has three 500 mt/hour boilers generating 140 kg/cm^2 (1991 psi) steam at 570°C (1058°F). New construction at the station will duplicate the present system. For winter heating use the station also has two 100 giga calorie/hour hot water boilers.

ii. Steam Pressure Levels

The refinery uses steam at the following nominal pressure:

1. 38 kg/cm^2 (540 psi) @ 370°C (696°F)
2. 13 kg/cm^2 (185 psi) @ 194°C (381°F)
3. 6 kg/cm^2 (85 psi) @ 154°C (309°F)

The refinery receives steam from the district power station at 40 kg/cm^2 and 16 kg/cm^2. The 16 kg/cm^2 steam is desuperheated into the 13 kg/cm^2 system. The 6 kg/cm^2 steam is obtained by desuperheating 13 kg/cm^2 steam and from waste heat boilers.

iii. Steam Users

The main user of the 38 kg/cm^2 steam is the 6 000 kw steam turbine driving the reformer unit's recycle gas compressor. The 13 kg/cm^2 steam is used on the process units for stripping steam, reboiler heating media, steam pump drivers, atomizing steam for burners, heating heavy product storage and heat tracing. The 6 kg/cm^2 steam is used for building heating, plant hot water heating and heating boiler feed water.

iv. Condensate System

There are two plant condensate systems; one for the 13 kg/cm^2 steam and one for the 6 kg/cm^2 steam. The higher pressure condensate is sent to a central condensate system. At that point it is filtered and mixed with chemically treated water and used in the waste heat boilers as boiler feed water.

The refinery's condensate recovery is about 20%. No condensate is sent back to the district power station.

v. Impact of Potential Energy Saving's Projects on Steam Balance.

Since the only user of 38 kg/cm^2 steam is the reformer's recycle gas compressor's driver turbine no change in this steam system's demand can be expected. Installation of combustion controls will reduce excess air and result in less flue gas. It can be expected that waste heat steam generation will decrease by about a third of the gross heat savings.

Insulation heat savings will decrease the amount of steam used by lowering heat losses in steam lines and vessels using steam heat such as reboilers. These savings should show up as a decrease in steam purchases.

The refinery balances its steam system by purchasing steam and by desuperheating steam. Waste heat steam is made to the maximum extent practical. When the coking units and FCC come on stream the amount of steam purchased should decrease as both units usually are gross producers of steam. If the refinery should get to the position of having surplus steam generation, it could consider installing a turbogenerator with an admittance/extraction nozzle to minimize condensing and help balance the steam systems or installing steam turbine drives back pressuring on the 6 kg/cm^2 system.

d. Electric Power System

i. Electricity Sources and Generation

The Shymkent refinery imports all its power. Two 110 kV lines are brought to the refinery. The first line is from the district power station and is normally the refinery's main power source. The second 110 kV line is usually the back-up or reserve line and is from the state power grid and usually supplies a smaller share of the load.

The refinery during normal crude processing operations averages about a 15 MW draw. Its maximum allowable power draw is 60 MW. However, the demand charge is "times 5" for that power drawn during a demand period that is over the contract draw. The demand periods are each half hour during the 0800 thru 1600 hour period and each hour during the rest of the day. In November, the refinery paid 24 rubles per kW/hr (0.8 cents per kW/hr.) for its power.

When both the coker and FCC complex come on stream the refinery power draw will more than double. The district power station present electrical generation is supplied by two 80 MW turbines. New construction is on-going that will duplicate the present station. We were told that this construction would be completed in time to supply the new units. At present, the state grid is tight on power as Uzbekistan is now not supplying power to the grid.

ii. Electric Distributing System

The 110 kV switching "boneyard" for the refinery service entrance is outdoor utility type equipment installed in a concrete-vault type building. Air reactors are installed on the incoming lines. The 110 kV leads thru bushings are brought back outside through the rear of the building and fed overhead to two 40 MVA 110 kV/6 kV-6 kV transformers. Each transformer's secondary winding feeds one side of two 6 kV split buses. Both split buses have a fire breaker.

The service entrance substation's 6 kV split buses are composed of 6 kV Polish manufactured switchgear. The busbar is aluminum and the breakers are metal clad, air break with arc chutes and withdrawable. The switching and metering equipment for the substation is also in the switchgear line-up.

Feeders from the two 6 kV service entrance bus are run to unit substation's split buses; one feeder from a corresponding section of each service entrance split bus. The unit station's split bus also comes with a split bus. The two feeder breakers and tie breaker are interlocked so that only two of the three breakers can be closed at the same time. The typical unit substation is a two story building, force ventilated from 15 meter high stacks and is located just outside the battery limit of the unit it serves. The first floor contains the 6 kV split bus with service entrance, metering and relaying equipment and breakers. Also, on the first floor in concrete vaults with an outside door are the 6 kV/0.4 kV transformers. On the second floor is the 0.4 kV metal clad draw out type switchgear and the 220 volt lighting switchgear. Most of this metal clad switchgear is also of Polish manufacture.

The 6 kV feeders are both underground and overhead. The refinery has an on-going program to replace underground feeders with overhead lines.

iii. **Electric Power Users**

Most of the refinery's electrical energy is used to power electrical motors. Other users are the electric desalters, lighting, welding equipment and electronic equipment. The refinery's power factor at the present time varies from 0.90 to 0.92, 0.80 is the minimum seen during the year.

e. **Other Utilities**

The other utilities furnished in the refinery are: plant air, instrument air, cooling water, industrial water, nitrogen (at 40 kg/cm^2 and 6 kg/cm^2), hot water, demineralized water and drinking water.

4. Environmental Considerations

a. **Fresh Water Supply**

The refinery process and sanitary water supply is from the District Water System. The District uses the artesian well, Badam-Sairamski as the source of supply. The water at the well is of sanitary quality, therefore the District only provides chlorination for disinfection.

The dissolved solids content, partially the hardness at 450-500 mg/L, cause operating problems in the cooling tower and heat exchanger

loops. A water treatment study was conducted by The Institute of Problems - Petro Chemical, Ufa City, Russia. The reported recommended plan would involve the installation of reverse osmosis units on both the incoming water and the treated effluent. The treated effluent would be recycled. The estimated cost in mid 1993 was 1.6 Billion Rubles. Plans have been made for the installation but construction is being delayed due to availability of money.

Limited chemical data was available. See Table V D4a-1.

TABLE V D4a-1
WATER QUALITY

TEST	UNITS	DISTRICT FRESH WATER	COOLING TOWER		POWER STATION
			LOOP 2	LOOP 2	
pH	Unit	7.6	8.3	8.2	---
HARDNESS					
Carbonate	mg/L as $CaCO_3$	235.0			---
Non-carbonate		475-500	468	439	---
SO_4	mg/L	250	315	240	---
Cl	mg/L		51.5	52	---
Si	mg/L	---	---	---	0.5
Fe (TOTAL)	μ/L	---	---	---	30
COD	mg/L	17.1	12.5	8.7	---
Conduct-ivity	mvc/cm	---	---	---	2.0

b. Water Treatment and Distribution

The water supply to the fire loop, process use and sanitary purposes is from the same source. Therefore, there is only one distribution system within the refinery. No additional treatment is provided for the water before use.

The refinery does not have its own power plant. The process steam and electricity is imported from the nearby District Power Plant. The power plant provides the refinery with deionized water for the refinery waste heat boilers. The refinery does not return the steam condensate to the power plant. The condensate is added to the cooling tower loops to help to control the hardness and solids content.

The refinery has two sewer systems. System I collects the waste water from those units that have the potential of being high in oil content. System II collects the waste water from those units which would be less likely to contain large quantities of oil. A storm water sewer system was designed, but due to the lack of funds, the system was not constructed.

The stormwater within the process units flows into the regular waste water sewer in the process area. Excess water flows, during times of rainfall, can be directed to three emergency lagoons. The collected water is returned to the waste water treatment plant for processing.

System I and II have identical types of treatment unit processes. The only difference is in the number or hydraulic sizes. The treatment units are:

- Circular Sand Traps
- Rectangular Oil Traps
- Intermediate Settlers
- Dissolved Air Floatation
- Activated Sludge Aeration
- Secondary Clarifiers
- Activated Sludge Reaeration

System I also has three equalization lagoons. Water from these lagoons is used in the cooling tower make-up or pumped to the gravity pipe to the evaporation lake in the desert. The gravity pipe to the lake is 97 kilometers long. See Table V D4b-1 for water analysis.

TABLE V D4b-1
WASTEWATER QUALITY

	SYSTEM 1				SYSTEM 2				
ANALYSIS	RAW	SAND TRAP	OIL TRAP	CLARIFIER	RAW	SAND TRAP	OIL TRAP	CLARIFIER	COMB. EFFLUENT
Temp. -°C	28	27		32	35	32			
pH-Units	7.9	7.8			7.9	7.6		7.9	
BOD_5		137				124		19	11.4
BOD_{21}								5.8/60	19.4
Oil	4 182	12.4	820	42	565	94	13.1	5.8/60	5.4
Susp. Solids	64	32	168	40	56	39.2/56		23.7/46	23.9
TDS	956				38.06			875	1 030
Hardness Non-carbonated								490	
Biocarbonated								285	
Permanent								205	
Sulfur								3.6	
SO_4									
Cl					362				
SO_3					2.3				
PO_4				0.1				0.2	0.05
NH_4				3.1				6.7	5.9
NO_2								0.0135	
NO_3								5.9	

System I water is being considered for treating with the reverse osmosis (RO) unit and then re-using the treated water. The RO reject water would flow to the desert lake for evaporation.

System II was also provided with a secondary dissolved air floatation unit after the secondary clarifiers. This unit was being by-passed and the secondary clarifier overflow was being pumped to the sewer line and then to the desert lake.

The oil collected in System I or II is treated in common oil treatment tanks. There are four heated above ground steel tanks to allow for gravity separation of the oil, water and sludge. The oil is pumped to the crude oil storage tanks for reprocessing, the water is routed to the head end of the System I waste water treatment plant and the sludge routed to the sludge dewatering/oil skimming pits.

The sludge from the oil traps, intermediate settling and the secondary clarifiers is processed in two sludge lagoons. The free oil and water floating in the lagoons is pumped to the oil treatment tanks for processing.

The compacted and partially dewatered sludge is excavated from lagoons 1 and 2 and placed in covered lagoon #3; when the sludge dried to a consistency of soft asphalt it is excavated and used for road sub-base, containment dikes walls and engineered fill for construction projects. Any excess sludge is sold locally.

c. Cooling Towers

The cooling tower, hot side oil traps and recycle pump station for all the process units are located in one area. The towers are packed with spiral plastic tube bundles. The non-reversing fans are mounted and operating. The cement asbestos siding is tight and well maintained. The hot side oil traps are covered with loose fitting cement asbestos corrugated sheets. The oil traps are manually operated for oil skimming and sludge removal. Very little oil was on the surface and sludge is removed about every two years. The pump room was clean and well maintained.

During the walk through it was noted the water distribution at the bottom of the tower was near uniform. A 10 to 17°C temperature drop across the towers was reported.

The make-up water is from the refinery fresh water supply. The blow down is routed to System I for treatment and disposal.

See Table V D4a-1 for typical water quality.

Corrosion inhibitors are added manually. The addition is determined by periodic laboratory analysis. The concentration of the inhibitor is maintained within 5-15 mg/L in the recirculating water.

d. Tank Farm

The refinery tank farm consists of 64 tanks, 54 for liquids and 10 for liquified gas, with capacities ranging from 20 to 25 000 cubic meters. Of the 54 above ground steel tanks, 17 are equipped with floating roofs and 37 are fixed roofs. None are blanketed with nitrogen or are equipped with vent conservation valves or vent collection piping.

It is estimated that 2 100 mt/yr. of volatile organics are lost through the tank vents.

See Table V D4d-1.

TABLE V D4d-1
PRODUCT STORAGE TANKS

UNIT #	# TANKS	PRODUCT	CAPACITY CUBIT METERS		ROOF
			TOTAL	EACH	FIXED/FLOAT
303	6	Gasoline	20 000	3 300	Fixed
304	4	Diesel	20 000	5 000	Fixed
304	2	Crude Oil	20 000	10 000	Fixed
301	2	Crude Oil	50 000	25 000	Fixed
305	3	Kerosene	5 000	1 670	Fixed
306	3	Gasoline	5 000	1 670	Float
307	4	Gasoline	10 000	3 300	Float
308	3	Kerosene			Fixed
313	2	Crude Oil	20 000	10 000	Fixed
313	2	Crude Oil	20 000	10 000	Fixed
311	4	Mazut	5 000	1 250	Fixed
311	1	Mazut	1 000	1 000	Fixed
316	6	Gasoline	1 000	167	Float
229	2	Gasoline	3 000	1 500	Float
230	2	Kerosene	3 000	1 500	Float
231	2	Oil	3 000	1 500	Fixed
232	2	Diesel	3 000	1 500	Fixed
217	2	Mazut	3 000	1 500	Fixed
236	2	Asphalt	1 000	500	Fixed
317	10	Liquid Gas	200	20	---
TOTAL	64				17 Float
					37 Fixed

Estimated Hydrocarbon Loss: 2 100 mta.

e. Environmental Considerations

The refinery processed 6 048 170 mt of 0.4% sulfur crude in 1992. This relates to 24 192.7 mt of sulfur arriving with the crude oil. The refinery removed 84.9 mt of sulfur from the products and recovered 50.9 mt in 1992. This equates to a 0.3% removal and a 60% efficiency of the sulfur recovery unit.

The refinery has two Claus Units, one rated at 5 000 and one at 20 000 mta capacity. The 5 000 mta unit was built in 1992 and the 20 000 mta unit was built in 1986. Both units were down for maintenance during the walk through. The hydrogen sulfide was being burned in the flare system.

Serious operation problems exist due to the low gas flow rate. The hydrogen sulfide design gas flow rate for the 5 000 mt unit is 200 cubic meters/hour and for the 20 000 mt unit is 500 cubic meters per hour. The flow rate during the visit was only 60-70 cubic meters/hour. The low flow rate is a function both lower ____ design crude oil sulfur content and shutdown of the kerosine HDS unit. Environmental regulations regarding kerosine sulfur levels are reportedly not with the kerosine HDS shutdown due to lower inlet sulfur levels.

They tried to operate at their low flow rate and the catalyst froze up with sulfur. A resulfuration/redesign of the sulfur pumps in content with future environmental regulation changes is strongly recommended, especially when operation of the VGO HDS unit is started.

See Table V D4e-1 for estimated sulfur balance.

TABLE V D4e-1
1992 SULFUR BALANCE

PRODUCT	PRODUCED MT	SULFUR	
		%	MT
LPG	54 931	0.0001	---
Fuel Gas	125 552	0.0001	0.1
Gasoline	1 106 733	0.01	111
Kerosene, Jet Fuel	503 620	0.02	100.7
Diesel 1	1 371 576	0.06	823
Diesel 2	207 245	0.17	352
Mazut	2 539 578	0.89	22 602.2
Sulfur	50.9	---	50.9
Sulfur Plant Stack	Sulfur		34.0
Losses and Misc.	138 884		
TOTAL	6 048 170		24 073.9

Crude Processed	6 048 170 mt
Average Sulfur Content	0.4%
Estimate Sulfur to Refinery	24 192.7 mt
Miscellaneous Loss/Sampling Error	118.8 mt

The refinery obtains its electrical, steam and boiler feed water from the local District Power Plant.

The refinery process fired heaters are designed to fire refinery gas or heavy fuel oil (mazut). The heaters are not equipped with either combustion air controls or any gas clean-up devices. The heater stacks are not equipped with oxygen analyzers to optimize the combustion efficiency.

The control valves, flanges and seals show evidence of product loss. The storage tanks are equipped with fixed roofs or floating roofs and vents. No vent controls are installed.

The waste water treatment plant tanks are partially covered. No ventilating and recovery system is installed to capture the volatile organics.

The oily sludge lagoon air is allowed to evaporate water and oil products. The residual oil in the treated final effluent is allowed to collect and evaporate at the desert lake. The estimated 1992 hydrocarbon loss for the refinery is 13 030 mta. See Table V D4e-2.

TABLE V D4e-2
HYDROCARBON LOSS

COMPONENT	ESTIMATED LOSS MTA	
	1992	1991
Saturated Hydrocarbons	10 367	10 045
Benzene	141	144
Xylene	110	111
Toluene	212	215
Refinery Process Loss	10 830	10 515
Tank Farm Loss estimated @ 20% of refinery process loss	2 200	2 100
TOTAL LOSS	13 030	12 615

The raw water is high in both carbonate and bi-carbonate hardness. This high content requires significant chemical addition to prevent deposition of the calcium carbonate. Appropriate chemicals, chemical metering and monitoring equipment are not available. The refinery is experimenting with using a permanent magnet in cooling tower recycle lines. It was reported the permanent magnet has cut down on the deposition of solids in both the heat exchangers and cooling tower basis. No other or better source of water is available. Therefore a pretreatment system should be provided in the form of softening or de-ionization. See Table V D4a-1 for chemical quality of fresh water.

The treated waste water is acceptable for discharge to the evaporation lake in the desert. A problem exists because of the 97 kilometer pipeline to the desert evaporation lake. Some of the farmer and herdsman have knowledge of the pipeline and have tapped the pipe for irrigation or stock drinking water. One commercial activity, a car and truck washing company, also tapped the pipe line for a source of water. The washing operation was discovered by the local inspector and the refinery was assessed a fine for the problem.

The solid waste from the storage tank, oil trap, intermediate tank cleaning and waste biological and floatation sludge is currently not being disposed of in an acceptable manner. The free oil should be recovered before the sand is used for fill material.

The lack of sufficient funding for preventative maintenance impacts upon the environmental control in two adverse ways. The first is at the process block - the lack of preventative maintenance causes an excessive amount of product to be lost to the waste water sewer. The second is the lack of preventative maintenance at the overloaded waste water treatment plant prevents the equipment from performing near design capabilities. In order to meet western standards of operation, many existing processes or process equipment must be upgraded or replaced and the oil/sludge handling equipment will have to be replaced.

Tetraethyl lead is not added to the gasoline.

The refinery does not remove or provide any special control for aromatics.

It was reported that no significant quantities of solvent are used in the refinery.

Tri-chloroethylene is used as the source of Chloride Ion for the continuous reactivation of the reformer catalytic. The trichlor is received in cubical containers, 1 meter x 1 meter x 1 meter. The box is provided with fork lift slots on the base. The tri-chlor is removed from the shipping container by a hand pump to a hand held bucket. The bucket is carried to the top of the dry tank for mixing with gasoline. The mixture of tri-chlor and gasoline is fed by chemical feed pumps to the reformer system.

The shipping tanks and the dry tank are not contained. Any spill or leak could flow into the sewer inlet or spread and evaporate. No hazardous warning sign was noted.

The refinery does not analyze for or track the presence or deposition of heavy metals.

The recovered sulfur is shipped by railroad tank to a local lead/sulfuric acid production plant.

It was reported that the refinery does not use any significant quantity of either sulfuric or hydrofluoric acids; there are no alkylation units.

The refinery does not have its own steam/electrical power plant. The only fuel combustion units are the process fired heaters. The heaters are equipped to fire refinery gas or heavy fuel oil. The heaters are not equipped with flue gas analyzers or automatic control valves on the combustion air inlet. Therefore the combustion efficiency can not be automatically controlled.

The refinery does not have a bitumen process.

f. Quality of Local Environment

The refinery does monitor the ambient air quality in both the refinery and the nearby residential areas. The laboratory is equipped with gas chromatagraphs to analyze the gas samples. The air in the residential areas are sampled weekly. The samples are collected down wind from the refinery. The data indicate the refinery does not exceed the allowable limits except in very unusual conditions. The standards used are reported to be the Moscow Standards developed before the break-up of the Soviet Union. Kazakhstan adopted the Moscow Standards as temporary standards until they have time to analyze them and determine if and what modifications are needed to make the Moscow Standards a permanent standard.

g. Current Emission Controls

The refinery partially controls the release of product to the atmosphere by using floating roofs in the light fraction storage tanks and by having oil skimming and biological treatment of the waste water. No other emission controls are provided.

h. Refinery Specific Potential and Opportunity for Improvement

During the refinery visit two items were observed that could reduce the emission with little or no capital excess. The two are: (1) increase the frequency of oil skimming in the intermediate settle and the oil traps, and (2) optimize the operation of the diffused air floatation unit.

During the walk through, excess oil on the surface of the oil traps in the intermediate settling was noted. The total amount of closed product could be reduced if the accumulated oil were removed more frequently and the free oil in the sludge lagoon be skimmed more frequently.

The dissolved air floatation clarifier was not operating properly. The amount of flocculent and the free air bubbles was less than desirable to develop an effective float. The flocculent feed and the amount of air applied to the dissolution tanks should be increased.

There were numerous medium term or cost actions that were observed during the walk through. These are:

- Provide pre-treatment to the raw process water.
- Initiate an employee pollution prevention program.
- Determine the water pollution sources.
- Determine sources of hydrocarbon releases.
- Cover the waste water treatment plant.
- Install combustion controls on the fired heaters.

The public water supply to the refinery is from an artesian well. The well water is high in hardness, both carbonate and bicarbonate. Methods of softening are lime softening, resin softening, and deionizing by absorption or reverse osmosis (RO). It was reported that a 60 Million Ruble (1993) study was performed and RO was recommended. The recommended RO project was estimated to cost 1.6 Billion rubles (1993).

Many western refineries attribute a significant pollution reduction to introducing an ongoing education program. The education program must be designed to overcome the attitude that, pollution control is the responsibility of just certain people or department. The program teaches the management and operating people that they are all responsible to minimize the amount of pollutants being released. Their responsibility extends to the extent that observing a pollution discharge without taking corrective action is reason for suspension or job loss for the employee. Willfully causing a release of pollutants can also result in the refinery closure and/or a severe monetary time. Therefore it is recommended that an educational program be implemented that would cause each refinery employee to recognize what pollution releases are,

what damage they can cause and what they can personally do to help minimize the pollution releases. Typically a reward program works in conjunction with the education program. Rewards are given for stopping pollutional losses or recommending changes which can minimize future losses.

To monitor the effectiveness of the education program it is necessary to have a base line pollution control survey. It is necessary to know specifically how much pollution comes from each process block and which piece of equipment or unit is causing the loss of product. With this data everyone will know where the losses are, how much is being lost and what can be done to minimize the loss. Therefore it is recommended that an investigation and sampling program be undertaken to collect sewer flow data and pollution levels for all of the process blocks. With this waste water flow balance the improvements in either water flow or lost product then can be measured. Also an equipment replacement or revamp schedule can be developed.

The air pollution releases can be reduced by replacing leaking valves, gaskets and seals and installing storage tank vent controls. Before starting to repair or replace valves and seals or constructing vent collection systems it is necessary to determine an order of priority. To do this, an organic vapor analyzer (OVA) can be used to sniff at all potential sources - valve stems, flanges, seals, vents. With the data collected a schedule of repair/replacement can be developed, of course, if a bad leak is noted during the survey, it should be fixed immediately. The sniffing survey should be conducted every three to four months until all sources have been repaired/replaced.

Because of the large number of small sources and the recommended frequency of inspection, it is recommended that a PC computer with spread sheet capability be made available to the environmental personnel. Data from the waste water source can also be entered into the PC for data and program control.

In conjunction with controlling the volatile organic losses within the process blocks, it will be necessary to control the losses at the waste water treatment plant. Therefore the sand traps, oil traps, intermediate settling and the dissolved air floatation unit will need to be covered. A fan to induce a slight negative pressure under the cover must be installed to prevent any leakage around the cover. The fan can discharge to a vapor recovery or treatment system or to the flare system. The vents at the light fraction storage tanks should be scheduled for control when the waste water treatment plant is controlled.

The process heaters are not equipped with combustion control systems. This allows for the potential of excess CO or NO_x and an inefficient use of fuel. To increase the efficiency of fuel use and the control of CO/NO_x it is recommended low NO_x burners be installed with automatic O_2 analysis and combustion air control.

5. Opportunities for Improvements

The overall goals of the work are to assist in the privatization of the petroleum sector by providing salient information for preliminary investment decisions, and to enhance privatization opportunities by recommending improvements for the existing installations that will increase technical and financial performance.

The work undertaken to meet the goals are part of the USAID NIS Petroleum Refinery Program for Kazakhstan. The purpose of the program is to:

- Identify changes in operating practices and low-cost modifications to equipment that can be immediately implemented to increase the efficiency of energy utilization, conserve energy by avoiding unjustified energy use, and reduce undesirable gaseous, liquid, and solid effluents.
- Identify and characterize more extensive changes in operating and maintenance practices, equipment, and physical modifications to the process units.

a. Operation Improvement Opportunities

The recommendations of this study to improve energy utilization and operations (yields, practices, etc.) are categorized in terms of immediate, medium-term, and long-term opportunities.

i. **Immediate Opportunities**

These opportunities require changes in operating conditions with or without nominal equipment modifications, those which appear implementable within the staff resources of a refinery, and at a cost of less than the equivalent of approximately US $100,000. This category covers zero to low cost modifications to the refinery that will be relatively easy to implement. The refinery should be able to execute these modifications with its own internal resources.

ii. **Medium-Term Opportunities**

These opportunities require formal justification, infusion of capital from external sources, and possibly the services of externally obtained experienced resources for implementation.

iii. **Long-Term Opportunities**

These opportunities involve abandonment of major processing units, major modernization (or revamping) of existing units, or the construction of new processing units. The justification would occur through market analyses, rather than technical analyses, of crude supply and product slates.

b. **Energy Improvement Opportunities**

The major energy improvement opportunities were summarized by the Evaluation Team and fall into four major areas: energy conservation, furnace combustion, heat conservation, and steam system improvements.

i. **Energy Conservation Improvement Opportunities**

Implementation of comprehensive energy conservation policies and programs. Economic evaluation of energy conservation programs should be based on world energy prices.

ii. **Furnace Combustion Improvement Opportunities**

Improvement of furnace combustion efficiencies by:

- Addition of monitoring equipment, e.g. flue gas oxygen analyzers, fuel flow meters, and associated controls.

V10

- Use of improved waste heat recovery techniques such as additional steam generation, convection section process reboiling, and combustion air preheat, especially need to be evaluated in terms of rapidly increasing energy prices.

- Replacement of equipment where necessary, e.g. burners and instrumentation.

- Operator training in efficient furnace firing techniques.

iii. Heat Conservation Improvement Opportunities

Improvement in heat conservation practices focused on the selected upgrade of insulation (repair, replacement, and addition) as warranted.

iv. Steam System Improvement Opportunities

Improvement opportunities in the area of steam system operating efficiencies included:

- Adding steam traps.

- Collecting and reprocessing condensate.

- Considering additional utilization of steam (e.g. steam turbine drivers with admittance/extraction nozzles and steam reboilers).

c. Types of Emissions Control Opportunities

The recommendations of opportunities to improve environmental conditions are categorized into immediate, medium-term, and long-term opportunities.

i. Immediate Opportunities

The immediate emission control opportunities require changes in operating practices with or without nominal equipment replacement, those which appear manifestly in the public interest, and those which appear implementable within the staff resources of the refinery for the equivalent of approximately U.S. $100 000.

411

ii. **Medium-Term Opportunities**

The medium-term emission control opportunities require infusion of capital from external sources, possibly the services of externally-obtained experienced personnel for implementation.

iii. **Long-Term Opportunities**

The long-term emission control opportunities are high cost and represent substantial clean-up of accumulated pollution from past neglect.

While a few of the environmental improvements can be implemented quickly, a considerable amount of capital must be invested for the majority of the needed work. The balance of capital investment versus environmental goals and improvements must be considered in the future.

In summary, the potential emission control opportunities include:

- Develop a comprehensive environmental program that stresses:
  - emissions awareness and responsibility.
  - monitoring of specific emissions from the refinery, both air and water.
  - termination of existing emissions to the environment.
- Enhance product desulfurization and refinery sulfur recovery capabilities.
- Improve water treatment operations by:
  - diligent monitoring of water emissions.
  - determined repair and maintenance of existing pollution and control equipment.

d. **Operation and Energy Efficiency Improvements**

Prior to implementation of any refining improvements (either energy efficiency or equipment replacement/revamp), a comprehensive strategic investigation and evaluation of the Shymkent Refinery long

term operating plans should be conducted. Based on the results of the evaluation, some or all of the following recommendations could be implemented.

The energy efficiency improvement opportunities described is this section are not given in any special order. However, these opportunities are organized in terms of Immediate-, Medium- and Long-Term Opportunities. Cost shown are on a U.S. Golf Coast basis. Many of the potential improvements require the refinery to develop a history of specific causes of unscheduled downtime, and resultant loss of product and profit as a basis for justifying the suggested project.

i. Immediate Opportunities

Below is a listing of the Immediate, Minimum Cost Opportunities for energy efficiency or operational improvements. For purposes of classification, Minimum Cost Opportunities will be defined to include expenditures below $ 100 000.00 U.S. Dollars.

a) The Shymkent refinery must develop and implement comprehensive energy conservation philosophies and policies. A formal program should be established and monitored. We suggest that the refinery raises its consciousness level and sensitivity to the energy costs involved in processing crude oil.

b) Initiate a detailed program that regularly monitors, calculates, and evaluates product yields and utility consumptions. The program must be designed and operated such that regular energy conserving or product quality adjustments are sanctioned and encouraged. Further, source of losses must be identified and minimized.

c) Launch an extensive equipment insulation program to repair and replace existing insulation in poor condition, supplement existing insulation in good condition (as necessary), and add insulation to currently exposed equipment items based on economics related to world energy prices and heat losses of equipment.

d) Invest in education programs or courses for the following topics:

- Overall fired heater operations, with specific focus on proper air/fuel ratios, burner operations, and maintenance.

- Steam trap selection and maintenance.
- Major process equipment inspection and recertification.
- Overall refinery energy efficiency improvement programs.
- Engineering design and operations course.

e) Audit the steam generation, distribution, utilization, and condensate return equipment and balances in detail. Develop a comprehensive plan to upgrade the steam system(s).

- Add, repair, & replace insulation as necessary based on world energy prices and heat losses from various sources.
- Design and implement new steam trap selection and maintenance programs.
- Consider utilization of steam turbine drivers, particularly for critical services. Since the refinery may operate at reduced throughputs in the forseeable future, steam turbine drivers may afford some operating flexibility along with improved utility efficiencies at turndown conditions.
- Consider replacing steam tracing piping with stainless steel or copper tubing. Ensure proper installation and insulation of steam traced lines.
- Consider the use of steam turbines with admittance extraction nozzles at the low or medium steam system pressure to minimize condensing and to help regulate and balance the steam system.

f) Conduct regular heat exchanger evaluation audits. Cleaning schedules and anti-foulant injection procedures should be based on audit results.

g) Develop process optimization strategies and procedures based on economic and safe operations. Specifically; reduce Catalytic Reforming Unit operating pressure to improve yields.

h) Conduct "Test Runs" of individual process units to determine baseline process operations and yields. Accumulation of Test Run data would require:

- Calibration of Instruments.
- Complete feedstock and product analyses.
- Complete temperature and pressure surveys.
- Specific material balance development with the goal to quantify "losses".

i) Provide, evaluate, and replace as necessary utility monitoring instrumentation and confirm its accuracy. Process unit utility consumptions per tonne of product should be calculated with yearly goals set to reduce utilities, so far as practicable.

j) Evaluate new and improved catalysts for the Catalytic Reforming Unit that may provide yield and energy efficiency advantages. It is highly probable that the old catalysts can be traded for the new catalyst and in addition a hard currency pavement will be made to the refinery to reflect the higher platinum content of the old catalyst. The refinery is working to achieve these goals.

k) Develop a detailed maintenance history and data logging program. Significant downtime data can justify equipment replacement.

l) Other recommendations are as follows:

- Investigate the use of structured packing as appropriate in other capacity limited towers, to improve fractionation and product quality.
- Install steam traps on all steam users.
- Where not already in place install permanent vibration and temperature monitors and shutdown devices on the refinery's critical compressors and air blowers.
- Investigate and install canned or magnetic drive pumps in dangerous chemical or acid service.

- Installation of double mechanical seal in a cartridge mount with more exotic metallurgy such as inconel, hastelloy and ceramic with Kalrvez and Graffoil-type o-rings to withstand fluid temperature in oxcess of 800°C (high-temperature products).

- Utilize a service for analysis and design of heat exchangers such as HTRI for designing new and rerating existing heat exchangers and look at pinch analysis of crude heat exchange train.

- Perform monthly flue gas analysis on each furnace and adjust burners accordingly. Preferably, go to automatic control, as suggested next.

- Install oxygen analyzers on furnaces in major refinery units. Preferably, install automatic fuel controls on all fired heaters in conjunction with "in-situ" Oxygen/flue gas analyzers.

- Purchase portable hand-held infrared digital thermometers for maintenance group for checking bearing housing temperature and insulation heat loss.

- Investigate the installation of remotely control of air dampers to furnaces.

- Investigate the installation of a flame guard system on burners.

- Study the addition of a vacuum pump to replace the steam vacuum jets in the normal operation of the vacuum unit. This will also improve environmental.

I. Immediate Opportunities

DESCRIPTION	COST	BENEFIT
Develop and implement a comprehensive energy conservation program. This could include: • Formation of an energy audit team. • Purchase of publications (magazines, books, periodicals) related to specific energy conservation practices. • Attendance at AIChE, API, NPRA seminars related to energy efficiencies. • Precise monitoring of all utility consumptions for each process unit. • Calculation of energy consumed per unit of feed or product, and comparison to Western standards. • Authority to make changes to improve overall refinery energy efficiency. • Hold the unit manager responsible for energy consumption. By: Shymkent Refinery	Insignificant if all the energy is now metered on the process units. Otherwise, the cost of installing those meters.	Significantly lower refinery energy costs. Provides a baseline for further yearly improvements. Major U.S. refiners have reduced their energy usage per barrel of crude run by over one third during the past 17 years. They are now averaging about a 1% reduction per year.

DESCRIPTION	COST	BENEFIT
Develop and implement a program to frequently monitor product yields and qualities along with utilities consumptions. Adjustments to process operating conditions would be recommended to optimize product values vs. feed and utility costs. This type of program could minimize lower value and maximize higher value product manufacture, and optimize product qualities (e.g., eliminate octane "giveaway"). By: Shymkent Refinery	Minimum Variable	Immediate improvement in quantity of higher quality product.

I. Immediate Opportunities

DESCRIPTION	COST	BENEFIT
Attend education/training seminars related to fired heater operations and optimization with specific focus on optimum air to fuel ratios, and burner operations & maintenance. The training representative should conduct the seminar at the jobsite if at all possible. Result will be immediate improvement in fired heater operations and energy consumption. Supplier: John Zink or equivalent, or furnace combustion specialist or consultant.	$10 000 to $15 000 for 1 person for 1 week.	Immediate energy savings in the fired heater sections of the plant.

DESCRIPTION	COST	BENEFIT
Attendance at steam trap selection and maintenance education/training seminar with special emphasis on reduced steam consumption. Result will be lower overall steam consumption. Supplier: Spirax Sarco, Inc. 2806 Center Circle Dr. Downers Grove, Illinois 60515 or Armstrong International 1081 East Ocean Blvd. Stuart, FL 34996	$5 000/person Western firms may be willing to present a seminar at no charge.	Immediate steam consumption reductions resulting in lower overall energy expenditures.

I. Immediate Opportunities

DESCRIPTION	COST	BENEFIT
Attendance at a refinery equipment inspection, evaluation, and recertification training seminar. Result will be ability to enact an approved preventative maintenance program to improve turnaround maintenance efficiency, equipment failure rates, and overall safety aspects of the complex.	$5 000 per person	Improved process unit on stream time.

DESCRIPTION	COST	BENEFIT
Attendance at AICHE, API or NPRA seminars regarding refinery operations energy efficiency. Supplier: AICHE, API, NPRA or European Equivalent.	$5 000 (Estimate) per person	Result will be better understanding of modern refinery energy efficiency improvement practices which will yield improved refinery energy expenditures per mt of crude processed.

I. Immediate Opportunities

DESCRIPTION	COST	BENEFIT
Attendance at petroleum engineering design and operating course. Supplier: UOP or Equivalent	$5 000 (Estimated Course Cost) per person	Result will be improved understanding of modern basic engineering design practices that can stimulate future process unit revamp options.

DESCRIPTION	COST	BENEFIT
Purchase one thickness gauging system (e.g. sonogram, audiogram). Vendor: Krautkramer Branson P.O. Box 350 Lewistow, PA 17044	$3 000 to $5 000	Allows maintenance crews to accurately determine process equipment metal thickness to efficiently monitor equipment corrosion, schedule turnaround maintenance and preclude equipment failures.

I. IMMEDIATE OPPORTUNITIES

DESCRIPTION	COST	BENEFIT
Conduct "Test Runs" of individual process units to determine baseline process operations and yields. Accumulation of Test Run data would require: 1. Calibration of instruments. 2. Complete feedstock and product analyses. 3. Complete temperature and pressure surveys. 4. Specific material balance development with the goal to quantify "losses". By: Shymkent Refinery	Variable - By refinery staff.	Provides a firm operations baseline for future process unit evaluations.

DESCRIPTION	COST	BENEFIT
Provide, evaluate, and/or replace the utility consumption monitoring instrumentation and confirm its accuracy. Evaluate overall Pavlodar refinery balances and utility system capabilities. Allows refinery staff to: 1. Qualitatively determine the capacity, reliability and future capability of the utilities systems. Results will determine if future utility adjustments (e.g. replacement of electric motors with steam turbine drives) could be justified. 2. Determine energy consumptions per unit of feed charged or product produced. Results will allow operating staff to adjust process conditions to improve overall energy efficiencies. By: Shymkent Refinery	Variable - By refinery staff.	Provides concrete utility consumption numbers for each process unit. This will allow accurate evaluation of the efficiency of each process, and thus lead to identification and implementation of energy savings activities.

I. Immediate Opportunities

DESCRIPTION	COST	BENEFIT
Purchase portable hand-held infra-red thermometer for maintenance group for checking bearing housing temperature and checking for insulation problems.	Budget Cost: $2 000	Improved on-stream time due to prevention of unscheduled maintenance; reduction of heat loss through poor insulation.

DESCRIPTION	BUDGET COST	BENEFIT
Perform monthly flue gas analysis on each furnace and adjust burner controls to minimize excess air. Attention to flue damper operation and burner air registers is also suggested.	Equipment has been supplied by John Brown through this U.S. AID program.	Immediate, in addition to environmental improvement. It is believed that a 10 to 15% improvement in fired heater efficiency is easily achievable. In 1992, Shymkent reported fuel usage of 182 015 metric tonnes. At $70/mt and 10% efficiency improvement, this equates to a savings of $1.3 million dollars a year.

I. Immediate Opportunities

DESCRIPTION	COST	BENEFIT
Install "in situ" oxygen analyzers on furnaces on major the refinery units.	$14 000 each plus installation labor	Refer to "Flue Gas" analysis recommendation above. This project contributes significantly to the overall fuel savings.

DESCRIPTION	COST	BENEFIT
Consider using Western firms when it is necessary to replace heat exchangers, as they use computer programs for analysis and design of heat exchangers such as HTRI for designing new and rerating existing heat exchangers. The resultant new designs are more efficient and cost effective.	Minimal	At design operating rates for the crude units an increase in crude heat exchanger efficiency is worth $35 700 per year per degree centigrade. That is, getting 10°C more out of the heat exchange train will save $357 000/yr in fuel loss. It should be noted that part of the short-fall is due to fouling and the need for improved cleaning regimen, however, improved heat exchangers and system analysis is a necessary part of the energy improvement process.

I. Immediate Opportunities

DESCRIPTION	COST	BENEFIT
Conduct regular heat exchanger operating audits. Exchanger cleaning schedules and anti-foulant injection procedures should be based on audit results. By: Shymkent Refinery	Minimal/Variable By refining staff.	Energy savings due to improved heat exchanger operation.

DESCRIPTION	COST	BENEFIT
Evaluate refinery hydraulic loops to determine if excessive pressure drops are taken across fluid flow system control valves. Trim pump impellers to meet actual system requirements.	Minimal by refinery staff.	Reduced electrical energy consumption.

DESCRIPTION	COST	BENEFIT
Purchase a computer aligning machine to achieve more accurate machine alignment; hence lower failure rate.	Budget price for one computer = $5 000	Improved on-stream time, and thus improved plant profitability due to prevention of unscheduled downtime.

424

I. Immediate Opportunities

DESCRIPTION	COST	BENEFIT
Purchase and install a computer with proper software for the maintenance group for monitoring, controlling, scheduling and tracking the refinery maintenance management system.	Budget price for computer and software = $20 000	Improved on-stream time as a result of decreased amount of unscheduled downtime through improved planning.

DESCRIPTION	COST	BENEFIT
Develop an extensive equipment insulation program to repair and replace existing insulation in poor condition, supplement existing insulation in good condition as necessary, and add insulation to currently exposed equipment items based on world energy prices and heat losses of equipment. Improve insulation practices, for example, insulate bare pumps, valves, piping, and jacket with aluminum or galvanized sheet metal where process temperature exceeds 65°C.	Approximately 250 parts at 1.0 m^2 each. Installed cost at $210/$m^2$ = $52 500	At average process temperature = 150°C, heat loss with a 3m/sec wind, approximately 3 200 Kcal/m^2 = 800 000 Kcal/hr Approximate value: $800\,000 \frac{Kcal}{hr} \times \frac{Kg}{9\,800\ Kcal} \times \frac{tonne}{1\,000\ kg} \times \frac{7\,920\ hr}{yr} = 646.5 \frac{tonnes}{yr}$ $\frac{646.5\ tonnes}{yr} \times \frac{\$70}{tonnes} \times \frac{1}{0.80\ EFF} = \frac{\$56\,571}{yr}$ Payout: $\frac{\$52\,500}{56\,571} = 0.93\ years$

I. Immediate Opportunities

DESCRIPTION	COST	BENEFIT
Where not already in place install permanent vibration and temperature monitors and shutdown devices on refinery's critical compressors.	Budget cost: $2 000/point. Estimate 8 pts/compressor. Cost = $2 000 x 8 = $16 000	Based on refinery experience, it is reasonable to assume 2 failures/yr. Cost of failure = $10 000. Total cost $10 000 x 2 = $20 000. Payback = Less than 1 yr.

DESCRIPTION	COST	BENEFIT
Investigate steam and condensate recovery system operations and options. Current lack of steam traps and condensate recovery systems result in inefficient utilization of the steam source. Audit the steam generation, distribution, utilization, and condensate return equipment and balances in detail. Develop a comprehensive plan to upgrade the steam system(s). 1. Add, repair, or replace insulation as required. 2. Implement complete steam trap selection and maintenance program. 3. Consider utilization of steam turbine drivers, particularly for critical services. This type of driver can provide improved utility efficiencies at turndown operations. 4. Replace steam tracing piping with stainless steel or copper tubing. Ensure proper installation and insulation of steam traced lines. For example, install steam traps on steam condensate lines in the refinery's tank farms.	1 trap = $200 Installed = $400 Total cost = $400 x 100 = $40 000	Savings of $1 000 to $3 000 per year per application are possible, if steam is now allowed to blow through unchecked in heating unit. Potential Pay-back, per trap $\frac{\$400}{\$1\ 000/yr} = 4.8$ *months*

I. Immediate Opportunities

DESCRIPTION	COST	BENEFIT
Action: Provide training in economics and planning, price setting in free market economics, product profitability analysis. This is preferably extensive exposure in a Western setting for 6 to 7 key refinery and ministry people. A second alternative is to bring the training to the refinery.	A two month list to the states would cost between 12 000 to 15 000 per person.	Provide knowledge to refinery management in administration of profitable operations in a free market, competitive economy.

I. Immediate Opportunities

DESCRIPTION	COST	BENEFIT
Action: Provide a review of and training in capital budgeting practices. Benefit: Allocation of capital funds in a business must be based on maximizing financial return. A portion of available funds are needed for maintenance, environmental and safety purposes. However discretionary capital should be allocated on a sound technical/economic basis. Refinery management needs the tools and understanding to recognize and support projects that minimize costs (in many cases energy savings) and thus maximize profits. Yield improvements, labor reduction, new products, new business lines, etc., also fall into this category. Supplier: To be determined. Business schools or individuals from project justification/financial analysis areas are possible sources. Groups specializing in management training, such as the AMA are another source.	$25 000 Estimated/person Follow-up $15 000/person	Improved return on invested capital and proper allocation of limited funds.

DESCRIPTION	COST	BENEFIT
Repair broken and damaged cooling tower sheathing to allow better cooling tower efficiency.	Budget price per tower - $5 000	A tower cooling water supply temperature can be translated to reduced water flow and lower pumping costs.

428

I. Immediate-Term Opportunities

DESCRIPTION	COST	BENEFIT
Investigate and install a lube oil analysis maintenance program to reduce equipment failure.	By refinery staff.	A full analysis of lubrication requirements and implementation of resulting insights will aid in reducing equipment failure and resulting loss of product due to unscheduled downtime.

DESCRIPTION	COST	BENEFIT
Action: Consider installation of variable frequency drives in selected applications.	Varies with application	Reduce energy consumption.

I. Immediate-Term Opportunities

DESCRIPTION	COST	BENEFIT
Investigate the installation and justification of condensate collection drums at the condensate collection stations.	Material and labor cost for 20 foot high x 10 foot diameter drum = $50 000.	Allowing low-pressure steam to flash off and be used in storage tank heating.

DESCRIPTION	COST	BENEFIT
Study the addition of a vacuum pump to replace the steam vacuum jet in the normal operation of the vacuum tower.	Installed = $30 000	Ability to obtain tower vacuum and more efficient operation of the vacuum system. Current low energy costs may not at this time justify the cost expenditure required would also reduce waste water contamination.

DESCRIPTION	COST	BENEFIT
Investigate the installation of a flame guard system on furnace burners.	Material - $1 000 for 28 burners = 28 x $1 000 = $28 000 Installed = $56 000	Combination of safety (prevent fire or explosion) and savings in excessive fuel usage should a burner fail.

ii. Medium-Term Opportunities

Below is a listing of medium term, intermediate capital cost opportunities (approximately $100 000 to $5 000 000) for energy efficiency or operational improvements:

a) Improve fired heater overall operations and efficiencies.

- Add advanced process control of combustion air & fuels.
- Replace or repair of burners as necessary.
- Replace heaters with steam reboilers where feasible.
- Consider incorporation of a Hot Oil System if replacement of fired heaters (e.g. reboilers) and/or exchangers becomes necessary.

b) Invest in computer software as follows:

i) Simulation program(s) for Fractionation, Crude / Vacuum Distillation, Reforming, and Distillate Hydrotreating and FCC Unit operations.

ii) LP Model for profit analysis based on alternate feedstocks and the resulting product slate.

c) Commission some or all of the following studies intended to improve the energy efficiency, operability, and/or product yields of the refinery:

- Installation of Advanced Control Instrumentation, particularly for combustion control.
- Modification / revamp of existing Catalytic Reforming Unit equipment (reactors, fired heater tubes, piping, etc.) for suitability to higher temperature (> 1 000 °F) operations for increased gasoline octane capabilities.
- Improve Vacuum Fractionation potential by modification of the current column internals.

d) Upgrade Steam Generation Systems

- Upgrade condensate recovery systems such that condensate is recovered and returned to the steam system.

- Consider Steam Turbine Drivers to improve efficiency of turndown operations. Investigate the economics of adding a turbine nozzel for steam admittance/extraction to minimize condensing and help to balance the steam system.

- Consider steam heated reboiler exchangers to replace fired heaters, where feasible.

II. Medium-Term Opportunities

DESCRIPTION	COST	BENEFIT
Commission a comprehensive study to investigate how best to improve overall fuel fired efficiencies considering: a) Addition/utilization of Advanced Process Control of combustion air and fuel(s). b) Replacement or repair of burners as necessary. c) Replace fired heaters with steam reboilers, where feasible. d) Consider incorporation of a Hot Oil System if replacement of fired heaters (e.g. reboilers) and/or exchangers becomes necessary.	A comprehensive study is estimated to cost between $150 000 to $200 000.	Immediate energy savings expected. The fired heaters are the most energy intensive equipment items in the refinery. They also appear to have the most potential for improved energy efficiency.

II. Medium-Term Opportunities

DESCRIPTION	COST	BENEFIT
Invest in computer software as follows: a) Simulation program(s) for Fractionation, Crude and Vacuum Distillation, Catalytic Reforming, and Distillate Hydrotreating. b) LP model for profit analysis based on variable feedstocks and resultant product slates. Allows systematic approach to operations and yields predictions. Simulation Program Suppliers: Hyprotech - "Hysim" Sim-Sci - "Process", "PRO/II", "ASPEN/SP" Chem Share - "Design II" AspenTech - "ASPEN PLUS" or equivalent	$20 000 to $250 000 Depending on program selected and training required.	Improved refinery operation and their profitability.

II. Medium-Term Opportunities

DESCRIPTION	COST	BENEFIT
Commission a study to evaluate best implementation of advanced control instrumentation for optimized process operations.	$250 000 (Est.)	Results in improved energy efficiencies, product quantity and/or product quality that are generally paid-off in less than one year.

DESCRIPTION	COST	BENEFIT
Commission a study to evaluate revamping of the existing Catalytic Reforming Unit to higher temperature/lower pressure operations for increased octane and yield benefits.	$250 000 (Est.)	Improved yields and product qualities of a high value product. Is needed to improve overall refinery profitability.

II. Medium-Term Opportunities

DESCRIPTION	COST	BENEFIT
Upgrade the steam generation, distribution, and condensate recovery systems to improve utility efficiency. • Upgrade condensate recovery systems such that condensate is recovered and returned to the steam system. • Consider Steam Turbine Drivers to improve efficiency of turndown operations. Investigate use of admittance/extraction nozzle. • Consider steam heated reboiler exchangers to replace fired heaters, where feasible.	To Be Determined	Reduced steam consumptions resulting in improved refinery utility efficiency.

DESCRIPTION	COST	BENEFIT
Action: Consider installation of two-speed/reversing motors/controllers on all cooling towers	$160 000	Reduced energy consumption, and maintenance (due to reduced icing) An economic justification of this recommendation should be undertaken, considering reduced energy consumption and maintenance costs.

iii. Long-Term Opportunities

Below is a listing of long term, significant capital investment (greater than $5 000 000) opportunities for greater energy efficiency or operational improvements. Implementation of these projects should be considered following a detailed evaluation of long range plan of the Shymkent refinery operations.

a) Proceed with plans to complete the partially completed FCC Unit Complex. Potential process additions should be appraised with the realization that the refinery may process heavier, higher sulfur content crude oils in the future.

b) The refinery must acknowledge that strict adherence to Kazakhstan state and world standard product specifications will be required in the future. Improved production quality standards may become necessary. Consideration should be given to:

- Merox treating of LPG, Gasoline, and Jet Fuel products.
- Higher octane requirements of the gasoline pool, Alkylation Unit.
- Lower sulfur requirements of heavy fractions.
- Fuel Oil desulfurization
- Additional elemental Sulfur Recovery, tail gas plant and revamp existing sulfur recovery to enhance recovery.

c) Incorporate Advanced Process Control or Distributed Control Systems into the refinery. This will require replacement of the majority of the refinery instruments. Consolidation of Control Rooms should be considered.

III. Long-Term Opportunities

DESCRIPTION	COST	BENEFIT
Proceed with plans to complete the partially completed FCC Unit. Potential process additions should be appraised with the realization that the refinery will process heavier, higher sulfur content crude oils in the future.	In process, cost estimated by refinery at $120 million.	Would place a partially completed asset in operation to meet projected future growth.

DESCRIPTION	COST	BENEFIT
The refinery must acknowledge that future strict adherence to Kazakhstan state and world standard product specifications will be required. Improved production quality standards may become necessary. Consideration should be given to: • Merox treating of LPG, Gasoline, and Jet Fuel products. • Higher octane requirements of the gasoline pool. • Future addition of an Alkylation Unit. • Lower sulfur requirements of heavy products which could require : a. Fuel Oil desulfurization b. Additional elemental sulfur recovery	To be determined	To meet future product quality and market demands.

e. Environmental Emissions Reductions

i. Immediate Environmental Opportunities

There were no observed situations in which field changes could be made during the site visit which would reduce the refinery environmental emissions. There are, however, some low-cost activities that can be undertaken.

I. Immediate Environmental Opportunities

DESCRIPTION	COST	BENEFIT
The following environmental activities could be undertaken with little capital expenditure.		Improved environmental conditions through reduction of oil outflow in waste water.
1. More frequent skimming of floating oil at the intermediate settlers.	Additional man hours of existing staff.	
2. Optimize operation of the dissolved Air Floatation Unit. Add more flocculent and increase amount of compressed air fed to the unit.	Cost of chemicals and power from Air Compressor.	

I. Immediate Environmental Opportunities

DESCRIPTION	COST	BENEFIT
Investigate and install a canned or magnetic drive pump in LPG dangerous chemical or acid service.	Budget Cost: $15 000	Personnel safety and environmental benefits through reduced VOC emissions.

DESCRIPTION	COST	BENEFIT
a. Supply the plant with stack gas analyzers which will allow them to optimize combustion to minimize the release of NO_x and CO.	$15 000	• Reduction of air emissions.
b. Provide an ambient air organic vapor analyzer so surveys of pumps, flanges, valves and vents can be conducted. With these data, a program of volatile organic emission reduction could be developed.	$10 000	• Generate an employee awareness of pollution control activity.

DESCRIPTION	COST	BENEFIT
Investigate the environmental benefit of converting existing burners to lower NO_x type.	Estimate cost low NOx burners at $1 000/burner	Immediate, environmental benefits

I. Immediate Environmental Opportunities

DESCRIPTION	COST	BENEFIT
a) Establish an Employee Environmental Education Program.	Cost of refinery manpower assigned or cost of outside consultant, estimated at $25 000.	Improved environmental conditions through education and resultant actions.
b) Determine the source of excess waste water flows.	Refinery manpower.	Improved environment through remedial actions.
c) Survey the valves, flanges, and vents for hydrocarbon losses. In conjunction with acquisition of an Organic Vapor Analyzer.	Refinery manpower.	Reduced VOL emisson through corrective actions.

ii. Medium-Term Environmental Opportunities

II. Medium-Term Environmental

DESCRIPTION	COST	BENEFIT
Install a storage tank vent collection system on the 37 tanks storing volatile products. Install three vapor condensing systems on the vent system above.	5 000 x 37 tanks = $185 000 2 at $15 000 = $30 000 Total = $215 000	• Recover about 2 100 mt of product per year. $160/mt of diesel is appropriate world price of product in Fall 1993. At $160/mt, this is $0.336 million savings or a 8 month payback.

iii. Long-Term and Further Environmental Work Required

The recommendation for further environmental work transcend the refinery. A state effort must be put forth to develop a viable body of laws, rules, regulations, inspection, and statewide inspection/enforcement procedures. This effort must involve the local District political and industrial representation plus interface with adjacent Districts or countries, as well. This effort will be required over a period of 5-10 years. The cost cannot be estimated at this time.

The results of this activity will provide the direction for future technical changes in refinery configuration and operations.

III. Long-Term Environmental

DESCRIPTION	COST	BENEFIT
The following activities will require additional studies and/or significant expenditures.		
a) Install combustion controls on the process heaters.	Previously suggested under energy saving section of this report.	Reduction in emissions as well reduced fuel usage.
b) Revamp or replace oil traps with an API Type Separator.	Minimal to $100 000 plus if replacement needed.	Improved waste water quality and increased recovery of waste oil.
c) Cover the Waste Water Treatment Plant.	Estimated at $50 000.	Reduced VOC emissions.
d) Modify sulfur plant so that it operates efficiently at the reduced feed rates now seen in refinery.	Engineering Study $50 000 to $100 000.	Implementation of results of study would reduce SO_2 emissions significantly.

6. Supporting Plant Data

a. Thermal Energy

i. Heat Transfer Equipment

a) Fired Heaters

Combination Unit

The crude section furnace N-101 and N-101/1 heat the charge to the atmospheric tower and bottom pump around streams for the preflash and atmospheric towers. The furnace is side-fired updraft with the flue gas collected and fed to a large 10 meter diameter 125 plus meter high concrete stack. The stack contains a 38 kg/cm^2 and a 13 kg/cm^2 waste heat boiler. The diesel desulphurizer furnace N-301 lies on the opposite side of the stack to the crude furnace and heats the reactor charge. It is bottom fired updraft with its flue gas feeding into a top mounted flue gas header which discharges into the same stack as the crude furnace. The kerosene desulphurizer furnace N-302 lies alongside N-301, it is also bottom-fired updraft with its flue gas being collected by the same top header.

The next furnaces in the line up are the reformer furnaces. N-201 is the desulphurizer charge furnace and N-203/I,II, III heat the three reformer reactor feeds. These furnaces are side-fired updraft with their flue gas being collected by the same top header as N-301. N-202, N-204, and N-205 are tower reboiler heaters. There is another reboiler heater N-104 for the crude unit debutanizer (K-104) on the light oil combination unit.

The vacuum distillation unit's furnace is bottom-fired updraft with the flue gas collected in a top header and fed to two small waste heat boilers and then thru induced draft fans to a 10 meter bottom diameter 125 meter high concrete stack. Air to the burners is supplied from two small air preheaters.

All burners except those on the reboiler heaters are combination burners firing mazut and refinery gas. The reboiler heater burners fire gas only.

b) Heat Exchange

Most heat exchangers are of the shell and tube variety. Product cooldown is normally achieved by first cooling by heat exchanging with other process steams through shell and tube exchangers. Products are then further cooled with forced air exchangers and finally trim cooled with cooling water in shell and tube exchangers.

Exchanger insulation is generally mineral wool covered with galvanized sheet metal or aluminum. On the combination unit, most of the exchanger bonnets and channel covers are not insulated. On the new vacuum units, the bonnets are insulated and installed with sheet metal covers. The almost finished coker was not observed.

ii. Waste Heat Recovery

Six energy recovery systems were seen in the refinery.

- Two air preheaters on the vacuum distillation unit.
- Two 4 kg/cm^2 waste heat steam boilers on the vacuum distillation unit.
- A 13 kg/cm^2 waste heat boiler utilizing the flue gas from the combination unit's atmospheric crude furnace N-101 and N-101/1.
- A 38 kg/cm^2 waste heat boiler utilizing the flue gas from the combination unit's desulphurizing furnaces N-301 and N-302 and the reformer furnaces N-201 and N-203/I,II,III.

The waste heat boilers supply about 50% of the refinery steam demand of 90 mt/hour. If the coker is a fraternal twin to the Atyrau coker, which it appears to be, it would have two 7 tonne/hour 13 kg/cm^2 (design) waste heat boilers.

The combination units waste heat boilers are an unusual design. The accumulators, aerators, boiler-feed water pumps and the other boiler appurtances are housed in a two story brick building built around the ten meter diameter 160 meter high concrete stack. The mud drum, steam drum, boiler tubes and superheating tubes of the 13 kg/cm^2 and 38 kg/cm^2 boilers are in the concrete stack.

The vacuum furnace pre-heaters were built by utilizing three of the flat finned-tube bundles and header sections utilized in the air cooler plus two force draft fans, welded enclosures and ducting. The heat media is hot water. This is a great way to utilize low level heat.

iii. Cost Effectiveness of Increasing Heat Transfer Surfaces

When the refinery has reasonable figures for its present and future projected energy costs, it should strongly consider doing "pinch" analysis for the heat exchangers on its major process units. This would help determine the economics of adding more exchangers to increase heat transfer and/or change heat exchange configurations.

As a rough example, the economic driving force to improve heat transfer within the light oil combination crude heat exchange train is as follows:

Basis: Design Crude Unit Feed Rate	947 tonnes/hour
Enthalpy of crude	0.6 kcal/kg - °C
Fuel Oil heating valve (minimum)	9 800 kcal/kg
Heater Efficiency	90%
Fuel Cost, World Price Basis	$70/mt

$$\frac{947\ t}{hr.} \times \frac{24hr}{day} \times \frac{0.6\ kcal}{kg\text{-}°C} \times \frac{1\ 000\ kg}{t} = \frac{13.63 \times 10^6\ kcal}{°C - day}$$

At 90% efficiency and an operating time of $\frac{330\ days}{yr}$

$$\frac{13.63 \times 10^6\ kcal}{°C - day} \times \frac{kg}{9\ 800\ kcal} \times \frac{\$70}{1\ 000\ kg} \times \frac{1}{0.90} \times \frac{330\ days}{yr} = \frac{\$35\ 715}{°C - yr}$$

Achievement of these savings may be possible through improved heat exchange design, minimization of fouling and optimization of the heat exchange train system.

i.e. The operating cost reduction, due to a decrease in the amount of fuel fired, is $35 715/year per °C rise in crude temperature, as a result of improved heat recovery in the crude heat exchange train. At 75% furnace efficiency, the savings becomes $42 860/year for each °C the furnace inlet temperature is raised.

iv. Tracing and Temperature - Maintenance Systems

All heat tracing now is done with steam, electrical tracing is being considered for possible future use. Fuel gas and small water lines are steam traced for freeze protection. Instrumentation process leads and cabinets are steam heated for freeze protection and/or heat maintenance. Mazut lines are steam traced for heat maintenance. Mazut tanks are steam heated.

Carbon steel tubing is used for most of the tracing. Most of the joints are made-up by welding, although there is some use of tubing fittings.

v. Heat Rejection Systems

a) Cooling Water Systems

Cooling water is provided to the process units from packed cooling towers. For further information on cooling towers see Shymkent Environmental Considerations - Cooling Towers, part 4-c.

The main uses for cooling water in the Shymkent refinery are:

- For final trim cooling of product and rundown streams in shell and tube exchangers.
- Provide cooling media in the inner and after coolers of the plant air compressors.
- Provide cooling media in the inner coolers on the H_2 compressors for the desulphurizer and reformer sections of the combination units.
- Provide cooling media for the lube/seal oil cooler on the reformer recycle gas compressor.

The refinery is having problems, especially in the summer, with the product cooling. The temperatures of the trim water coolers are 60°C instead of the design 40°C. Part of the cooling problem is due to deposits and scaling on heat transfer surfaces due to the high mineral content of the cooling water.

b) Air Cooling System

The air coolers noted were in two general sizes, both of updraft design and configured as vane axial units with shaped inlet balls. The smaller size has an eight-bladed manually fixed foil fan about 2.5 meters in diameter and is powered by a direct drive 30 kW motor. The larger size has an eight-bladed manually fixed foil fan about 4 meters in diameter and is directly powered by a 55 kW motor.

Both units are composed of flat exchanger sections which are comprised of rows of finned tubes rolled at each end into header plates and covered by a cast bolted header cover. The smaller units sections are about one meter wide, five meters long and one third meter deep. The small units themselves have six sections mounted in three horizontally paralleled inverted "Vs". The larger units sections are seven meters long and are mounted in four horizontally paralleled inverted "Vs".

They are used singlely and in paralleled arrays. A two section by four section array was noted. Most of the air coolers are mounted on a roof structure that is about five meters above the combination unit's pump alleys. It extends for almost a third of a kilometer.

c) Equipment, Piping, and Steam Heat Losses

Shymkent's heat losses are higher than those seen in Western refineries. There are four main reasons for this:

- The first is that with the very low price of Soviet crude and gas, there was very little economic incentive for Soviet designers to spend extra capital funds to make units more energy efficient.

- The second is that more and better insulating needs to be done. The only observed unit whose insulation approached U.S. Standards was the new vacuum distillation unit. The only high temperature solid insulation seen in Kazakhstan, was that installed on a GE turbogenerator at Atyrau during the post W.W. II Lend/Lease plan. Fiberglass and mineral wool are used in blanket form for insulating. The mineral wool is generally used as high temperature insulation and is very inadequate. The organic binder burns off and the insulation then rapidly deteriorates. Also, blanket mineral wood is soft and provides a poor backing for sheet metal covering. The refinery needs to do a better job of weather proofing its insulation. Both mineral wool and fiberglass wick absorb moisture reducing the insulating efficiency and causing pipe corrosion.

- The third reason is the longer piping lengths due to the spread out process units and the further distances between process units compared to western refineries.

- The fourth is the lack of combustion controls resulting in high excess air. This in turn leads to larger heated air losses to the atmosphere.

- Valves, pumps, exchanger bonnets, and other items that are time intensive to insulate were generally left uninsulated. As gas and crude prices rise to free market levels, economics will dictate more and better insulation.

b. Mechanical Energy

i. Compressors and Fans

The refinery has two centrifugal compressors, both located in the combination unit's compressor building. The first is the steam turbine driven recycle gas compressor. The 6 000 kW gas compressor boosts the reformer's recycle gas stream from 20 kg/cm^2 inlet pressure to about 36 kg/cm^2 discharge pressure. The machine is controlled with a Hartman and Braun, DCS utilizing an H & B compressor program with graphics. The CRT display can also be brought up in the control room. The second is the 2 000 kW electric motor driven diesel desulphurizers recycle gas compressor.

Also located in the compressor building are four 1 200 kW reciprocating machines. One of the machines, (PK-301) plus a spare (PK-302) is the kerosene desulphurizer recycle gas compressor. The other two machines, PK-303 and PK-304 are hydrogen compressors. All four are driven by low speed synchronous meters.

There are two induced draft fans on the combination unit one on the crude furnace flue gas and the other on the reformer/desulphurizer furnaces flue gas. At the vacuum distillation unit there are two induced draft fans each drawing on the furnace flue and discharging into a waste heat boiler. There are also two forced draft fans on each of the two vacuum furnaces air preheaters.

When the FCC complex is completed both the centrifugal and reciprocating compressor kW load will more than triple.

The compressor building housekeeping is good. The compressors are installed with adequate spacing for servicing and routine maintenance. Overhead cranes/hoists are installed for repairs. Equipment is painted and the foundations appear to be adequate. The compressor number is stencilled on the body of the machine.

ii. Pumps

Pump areas are generally well maintained regarding housekeeping. The pumps are installed with adequate space for servicing and routine maintenance. Foundations are poured concrete and the pumps are elevated. The pumps were generally painted. Coupling guards were in place, painted with safety colors and had the pump number stencilled on them. Unfortunately, painters tended to paint over manufacturer's nameplates.

Piping practices are poor and would be unacceptable by western standards. Pump inlet and outlet flanges are used as pipe supports and as anchor points. Some piping in the pump alley is run along at grade to pumps, exchangers, and sewers providing tripping hazards. Pump casing and impeller condition is unknown but no evidence of malfunctioning equipment was seen. The unit's mechanical engineers maintains passport type repair logs of the unit's mechanical equipment. The average pump age (running) is about 10 years. Chronological age is probably about five years older.

Most of the refinery's pumps are centrifugal pumps with single mechanical seals. It was mentioned that some of the heavy oil pumps on the delayed coker and the vacuum distillation unit had double mechanical seals.

iii. Electric Motors

The refinery's motors are mostly USSR built TEFC-XP (totally enclosed fan cooled - explosion proof) induction motors. Synchronous motors are used for reciprocating compressor drives. On the process units, the synchronous motors are TEFC-XP with top mounted water coolers to cool the circulating air. In the air compressor house they are general purpose enclosures.

At present the largest motors in the refinery are a 2 000 kW synchronous motor coker cutting water pump and it's spare and the diesel desulphurizer's recycle gas compressor driver. Motors 200 kW and over are powered at 6 kV; from 0.37 to 160 kW, 380 volts is used.

The new FCC complex would add over 30,000 kW of connected motor rated load. Among the motors that would be added are: three 4 000 kW 3 000 < pm synchronous motors that drive the three regeneration air blowers, three 3 200 kW induction machines that drive the centrifugal wet gas compressors and three 2 000 kW synchronous motors that drive the Vacuum Gas Oil desulphurizers recycle and hydrogen reciprocating compressors.

With the refinery's present electrical costs, the use of high efficiency or variable speed motors in the refinery would seem to be very low priority energy saving projects. They would have to be acquired from the West with hard currency, have only a nominal efficiency advantage over Russian built motors and have a very long time to payout.

iv. Steam Turbines

The only steam turbine operating in the refinery at the present time is the 6 000 kW 7 500 rpm Soviet manufactured steam turbine driven for the catalytic reformers recycle gas compressor. Steam is admitted to the turbine at 36 kg/cm^2 (515 psi) and 380°C (716°F). The condensate is used in the light oil combination unit's waste heat boilers.

v. **Special Equipment**

Vacuum in the vacuum column of the Vacuum Distillation Unit is generated by three parallel, three stage stainless steel steam ejectors.

Another item of special mechanical equipment in the Shymkent refinery is the hydraulic decoking system used to remove coke from the coking drums. The hydraulic decoking system consists of the following:

a) Decoking water pumps.
b) Boring tool. Hydraulically cuts a pilot hole (approx. 1 meter diameter) through the filled coke drum.
c) Cutting tool. Hydraulically cuts the coke from the drum.
d) Drilling assembly - air motor, power swivel, rotary drilling hose, crosshead guide and hoist assembly.

c. **Energy Loss Monitoring**

There is essentially no energy loss monitoring being done in the Shymkent refinery. Missing and needed are the following:

i. Combustion controls on boilers and heaters. No oxygen analyzers, either sampling or in-situ types were observed monitoring excess air. This is the first step in implementing combustion air control.

ii. Temperature surveys to monitor heat exchangers and compressor after and intercooler efficiencies to determine exchanger and cooler cleaning schedules. Also, heater stack temperatures to help monitor excess air and possible heater problems.

iii. "Pinch analyses" of the process units heat exchanger trains to determine if more heat recovery could economically be made by the use of more exchangers and/or changing the heat transfer configurations.

d. **Refinery Maintenance Practices (Miscellaneous Electrical/Instrumentation & Mechanical Details)**

i. **Policies**

There are approximately 1 800 people employed by the refinery. About 1 600 actually work in the refinery. The energy group (electrical/steam) has about 130 persons. There are ten engineers

and about 65 maintenance personnel with the rest being operators and supervisors. The mechanical group has 123 persons including twenty engineers. Ten of the engineers are instrument engineers.

The refinery has a problem obtaining stainless steel and high alloy piping such as furnace and boiler tubes. Also, spare parts from Russia and the other CIS are difficult to get. Pump impellers and seals have been especially difficult to obtain. Quality is also a problem, parts when received must be inspected to determine if they are suitable for use. An inordinate amount of spare parts must be manufactured by the refinery.

Besides the main shops, there are small mechanical, electrical and instrument shops located at the units. Small, daily, low capital repairs generally are done in the field. Large, non-routine, capital intensive work is generally done in the main shops (mechanical, electrical and instrument.)

Welders are retested every year on all the procedures they are qualified for. The welding on code vessels, whether for repair or manufacture, is 100% radiographed. Vessels operating with partial hydrogen pressures and high temperatures are guaranteed for 20 years. After 20 years service, continued use of the vessel requires that a special test be preformed on it, each year by the Lenneftetchin Institute of St. Petersburg. Since the catalytic reformer and the desulphurizers were started up in August of 1985 their vessels are not due for testing before August 2005.

ii. Overall Impressions

Walking through the refinery gate and looking out across the refinery and you immediately know you are not in a U.S. refinery. Its the spaciousness, the way the refinery is spread out, the large distance between units and the relatively large areas occupied by the process units themselves. This type of construction, at least 200 meters between process units, does increase piping costs and heat losses. It also makes fire fighting easier and reduces the risk of major fire damage. Maintenance is also enhanced, with more than adequate room around equipment to do preventative maintenance and easy accessibility to equipment and site working space during turn around work.

The process units are fairly new; the combination unit brought on stream during 1984 and 1985, the coker and vacuum distillation were completed in 1993. However, the unit's technology is a

generation older, late 1960's and/or early 1970's. Compounding this technology gap is that during its nine years of operation, unlike U.S. refiners, the refinery has not been forced to improve its technology by competitors, high energy prices, government regulations, such as; EPA, OSHA and market economics. Shymkent was able to serve its market and meet its quotas without having market forces and a competitive marketplace forcing it to do better.

The fire fighting brigade is part of the Kazakhstan army. It is very professional, has good equipment which it keeps in first class condition.

Shymkent is rapidly changing from a hydroskimming refinery, which could only process the "top-of-the-barrel," to a much more complete refinery with the addition this year of the Vacuum Distillation Unit and the Delayed Coker. It will be further rounded out with the addition of the Fluid Catalytic Cracking Unit and Gas Oil Desulphurizer that are now under construction. The next unit logically that needs to be built is an Alkylation Unit. With the completion of the FCC the refinery will have the isobutane and butylene/proplyene feed stock for this new unit. The alkylate can then provide the necessary octane boost, without lowering the RVP of the gasoline, that will be needed to fuel the more energy efficient, less polluting gasoline engines in the coming years.

With the implementation of the DCS on the combination unit the refinery should start installing advance controls to start generating the cost savings and profits that these controls can bring. Some advance controls to be considered for the combination unit are:

- Atmospheric Crude Section

  - Decoupling the side draws - This control allows the board operator to increase/decrease a side product draw (changing that product's IBP and EBP) without upsetting the other product side draws.

  - Cutpoint Calculation - This control replaces an expensive high maintenance analyzer. It calculates and infers boiling point measurements such as 95% point from tower measurements. These measurements can then be used for tower controls.

- Pump-around-Control - This control looks at the pump-around flows, temperature, energy use and heat transfers and then determines the economics of increasing/decreasing pump-around to increase/decrease product flows.

- Reformer Section

  - Reactor Optimization - Controls reactor temperature to optimize catalyst life versus octane number of the reactor outlet.

  - Prefractionator Control - Sharpens fractionation so as to minimize catalyst poisoning heavy ends and non-reactable light components in the reactor feed, thereby increasing the reformer's octane-tonne output.

- Desulphurizers

  - Hydrogen/feed ratio control - smooths flow, enhances the desulphurization reaction and extends catalyst life.

- Fluid Cat Cracking (upon FCC completion)

  - Reactor/regeneration optimization - controls reactor/regenerator parameters to optimize the reactions, decrease energy usage and enhance the product split.

One U.S. major refiner who decided to convert all of its refinery process controls to DCS, confirmed that their experience was that it normally took four to twelve months of the new controls operations to recover the DCS/advance controls costs for almost all of the process units converted.

When starting an advance control project, a "process audit" covering those areas that the process control will impact, needs to be made. This audit should show all pertinent data, such as flows, process conditions, energy usage, product quality and stream values. This establishes the baseline. Later, three to four months after the implementation of the advance controls, a final process audit also needs to be taken. This audit collects the same data as that taken for the starting audit. With the data from the two audits, a final report can be issued showing the actual savings versus the estimated savings and the reasons for any differences. Besides establishing credibility for the project estimate and payout,

it also provides the feedback necessary to improve the savings estimating.

Some ideal members of the audit team are the advance control engineer, the process unit's operations engineer and one of the consulting engineers, if used. The refinery will need to establish an advance control group to maintain and troubleshoot existing advance control schemes, evaluate possible future advance controls, design new advance control systems and implement and monitor their installations. With the high degree of savings seen on advance control projects, there is usually a push for their rapid implementation. This push, plus generally a lack of availability of suitable in-house expertise, generally makes it prudent to hire outside expertise. This expertise can be the advance control group of the DCS manufacturer being used (such as a Foxboro or Honeywell) or a consulting firm specializing in advance controls. This provides an opportunity to upgrade the refinery staff's expertise. An engineer from the advance control group should be assigned to work with and monitor the consultant. On similar later projects, this will normally allow more (or sometimes all) of the same type of control work to be done in-house.

iii. Process Unit Review

a) Light Oil Combination Unit

The Light Oil Combination Unit consists of an atmospheric distillation unit, catalytic reformer, diesel hydrodesulfurization (HDS), Kerosene HDS and a gas fractionating unit. There is also an ammonia-based refrigeration section for ethane recovery that is not used. The original capacity of the crude unit was six million mta, it has since been debottlenecked to seven to seven and one-half million mta (about 140 000 to 150 000 bbl/day.)

The two story control building is located about ten meters from the battery limits of the atmospheric crude section of the light oil combination unit. The control room, along with the back of the board area and a control equipment room occupies the upper floor (30 meters long by 15 meters wide and a 5 meter ceiling). The control board is "U" shaped with the sides being about 8 meters long and the base being about 16 meters long. The board is semigraphic with built-in alarm indicators, about U.S. technology circa mid - 1960's. Overhead lighting is fluorescent and the lighting levels are well below U.S. Standards.

Control is done with the same USSR built two-pen miniature recorder (15 cm x 17.5 cm) with control on one pen that we found in all the Kazakhstan refineries. The pneumatic controllers plugged into the back of recorders; PID for temperature loops and PI for all the other control loops. Temperature control utilizes thermocouples as sensing devices, potentiometric emf-to-pneumatic converters and pneumatic controllers. Multipoint temperature indicators and multipoint recorders are potentiometric and resemble the old Honeywell "Browns". In front of the control board are three operator consoles containing multipoint temperature indicators, motor ammeters and emergency shutdown switches. One console is for the crude unit, one for the reformer/desulphurizers and one for the gas fractionating unit.

The refinery is now implementing a Hartman and Braun DCS (Distributed Control System) for the combination unit. The reformer's, diesel HDS's and the Kerosene HDS's systems are finished and are presently under DCS control. Electronic transmitters are being installed on the crude and gas fractionating sections. There is one operator's CRT with keyboard for each of the five process sections plus an additional CRT/keyboard controlling the reformer's recycle gas compressor and steam turbine driver. The DCS has a controller tuning program. Normally the instrument engineers do the tuning. The control board is being kept as back-up for the DCS. The UPS battery pack will run the DCS for 15 minutes.

The back of the board area is enclosed. The control board tubing is plastic and the electrical wiring utilizes plastic insulated cables. Power is supplied from constant voltage transformers.

The board tubing to field tubing cables are neatly spliced, mounted and labeled in termination cabinets. Also mounted in this area are two instrument air filters and regulators, one system controls while the other is a redundant spare. Back of the back-of-the-board room is a control equipment room. In this room are mounted the receiver gauge switches for the alarms, emf-to-pneumatic convertors, analyzers and other auxiliary instruments for the control board.

Also in the control room is a NEC "Multisyncz A" octane analyzer with a color monitor and graphics on the reformer's last reactors outlet. On the crude unit are IBP and EBP analyzers. There are about 50 analyzers in the refinery, including pH and gas chromatographs. The refinery totals about 1037 measurements and 424 controllers.

The process sections are laid out in a row starting with the atmospheric crude, the two desulphurizers, the reformer and ending with the gas fractionation section. Starting at the crude end there is a wide pump alley that extends through all the process sections blending from one to another. Over the pump alley, five meters above the concrete deck is a concrete roof. Mounted on the roof are an acre or two of air coolers and some shell and tube exchangers. On each side of the pipe alley is a row consisting of towers, exchangers, and drums. On the left of the left hand row is a 10 meter wide concrete paved access way. On the other side of that, is the furnace row containing the furnaces, heaters, waste heat boilers, and the stack.

On the right of the right hand row is a ten meter wide access way. On the other side of the access way are buildings. The first building is an electrical substation, then the control building, followed by the compressor building and ending with another substation.

Fireproofing of the columns and vessel skirts is done with brick. All the exchanger, tower, and drum sections have raised curbs around them to contain possible spillage. Fire monitors are mounted five meters in the air usually on a concrete column, with a hand railed platform and a caged ladder leading up to it.

The eight electrical desalter drums have their high potential transformer and drum bushings mounted on one side of the drum topside. The high potential wiring is not insulated but the high voltage equipment is roofed over and enclosed with a

461

chain link enclosure with an interlocked gate that removes power from the desalter if the gate is opened. Unit lighting is incandescent in explosion proof fixtures. Lighting levels are well below those found in U.S. refineries. Motor feeds are generally underground while the rest of the electrical wiring is in overhead racks. The electrical cables are non-metallic plastic sheathed. The 380 volt motors have a small rocker-type explosion proof stop/start button. The 6 kV motors have a cast iron pedestal stop/start switch station with an ammeter.

The instrument field installation details approximate those of U.S. major refiners for the mid-1960's except for single process block valves. Electronics transmitters are being installed for the DCS system. P/I convertors are used where its impractical to replace the present pneumatic transmitter such as some displacement - type level transmitters. Pressure gauges are Bourdon tube type, mounted on pigtails but with only single block valves. Local temperature indicators are bi-metallic dial thermometers. For pressure and differential pressure transmitters, close coupling with heat paks and manifold valve mounting is not used. The transmitters are mounted at grade in large sheet metal boxes like the old mercury meters that were used in the U.S.

The furnace row starts with the crude furnace followed by a donut shaped waste heat boiler building. Occupying the donut hole is the 160 meter-high concrete stack. For further information on the waste heat boilers see section V C6ai-a, Waste Heat Recovery. Right between the desulphurizer furnaces and the waste heat boiler building are the diesel and kerosene desulphurizer reactors. Immediately after the desulphurizer furnaces is the reformer furnace. The reformer desulphurizing reactor is located on the furnaces access way side adjacent to the first furnace box section, which is used to heat the reactor's charge. Immediately following the reformer furnace is the structure holding the three reformer reactors. After the structure is a ten meter wide paved access way and then a side-by-side structure and compressor building. This process section was for ethane recovery but has never been used.

Across from the ethane recovery section next to the pipe alley is the gas fractionation section. Four of the six towers in the section have vertical reboilers. These reboilers are directly, or through a short spool piece, bolted to tower nozzles.

b) Crude Transfer Station

The crude station is located across the road from the refinery and about 1 km from the crude tankage. The station is owned and operated by the state pipeline company. The station housekeeping is very good. All equipment appeared to be freshly painted, well identified with stenciled legends. The equipment is installed with more than adequate spacing for servicing and maintenance. Overhead beams are provided for hoists where necessary.

The crude is received from the same pipeline that provides Pavlodar with its crude. A pigging station is located on the end of the receiving line. The crude is manifolded into three lines where it is coarse filtered, then fine filtered and measured by turbine meter. Crude oil flow measurements using turbine meters needs to be done at high Reynolds numbers and hence depending upon the refinery's demand; one, two or three of the metering lines might be in service.

Next to the metering runs, is a first class permanently installed meter prover. In the stations control buildings is the electronic equipment for the prover. Also, located in the building is the station operator, the control and communication equipment, and station's maintenance shop. The electronics appear to be card mounted with discrete solid state components. A density meter with Nixie tube read out was among the equipment present.

The refinery's crude storage consists of meter floating roof tanks. The bottom course of the tanks is insulated. The tanks themselves appear to be in excellent condition. No mixers are mounted on any of the tanks. The tanks are protected from lightning by steel towers whose lightning rod tips are over twice the height of the tanks. They are equipped with firefighting foam lines that can be fed from the firewall.

APPENDIX A

TERMS OF REFERENCE

464

S-O-W.Kaz
September 30, 1993

NIS PETROLEUM REFINERY PROGRAM
KAZAKHSTAN
STATEMENT OF WORK
28 September 1993

BACKGROUND

Twelve newly independent states (NIS) emerged from the collapse of the former Soviet Union in late 1991. These are Armenia, Azerbaijan, Belarus, Georgia, Kazakhstan, Kyrgyzstan, Moldova, Russian Federation, Tajikistan, Turkmanistan, Ukraine, and Uzbekistan. The U.S. Agency for International Development (USAID) is addressing and managing the assistance and collaboration needs of these countries through special administrative unit called the NIS Task Force (NIS/TF). Currently, only the needs of six of these countries are being addressed. They are Armenia, Belarus, Kazakhstan, Kyrgyzstan, Russian Federation, and Ukraine. The needs of the three Baltic states are currently addressed and managed by USAID's Europe Bureau.

USAID's program of assistance and collaboration in the NIS addresses a number of sectors of the national economies, including energy, environment, housing, agriculture, health, and education. For these sectors, activities are directed, as appropriate, toward conversion from centrally-planned to market-driven economics, privatization of industrial and commercial activities, and the promotion of democratic institutions. Funding of activities is limited to the cost of the technical assistance and collaboration efforts. Funding can cover limited capital assistance and collaboration efforts. Funding can cover limited capital assistance, when this is clearly needed in order to support the technical assistance and collaboration activities. The activities are selected and designed to be catalytic in nature, in terms of supporting the capital lending efforts of the World Bank and the European Bank for Reconstruction and Development (EBRD).

The USAID NIS Task Force has delegated responsibilities in the energy and environmental sectors, and for industrial technologies in general, to its office of Energy, Environment and Technology (NIS/TF/EET). NIS/TF allocates funds each fiscal year to NIS/TF/EET's Energy Efficiency and Market Reform (EEMR) Project, through which needed activities are identified, discussed with host-country governments, and implemented. The EEMR Project has three primary objectives:

165

to assist the NIS, through energy sector activities, to achieve viable economies while converting from centrally-planned to market-oriented economic systems;

to assist in achieving as high a level of safety as possible in the operations of existing nuclear power plants; and

to foster strong U.S. and NIS trade and commercial ties in the area of energy and environmental compliance, which assures a level playing field for American business.

The scope of the EEMR Project covers the energy sector in each NIS in two major respects: nuclear power plant safety and regulation; and coal, natural gas, petroleum, and electricity production and delivery systems (fossil energy area). This statement of work addresses petroleum product production and delivery systems. The scope of work is confined to the operation of the petroleum refining industries in Kazakhstan.

In general, the intent of the activities in the petroleum refining area is to promote reforms that balance supply and demand through (a) improved production from existing facilities, (b) development of additional capacity, (c) conservation and efficiency driven reductions in demand, and (d) improving environmental practices to reduce pollution. Activities to be undertaken in this area will be essentially analytical, developmental, and engineering in nature; and will support capital lending efforts of developmental or commercial banks that may follow the completion of the work.

To provide services for effectively discharging its responsibilities, NIS/TF/EET has arranged, or is arranging, through cooperative agreements for the participation of a number of organizations. The organization that appears appropriate to complement the work to be undertaken in the petroleum refinery industries of the country is the United States Energy Association (USEA).

USAID has negotiated a cooperative agreement with USEA, a not-for-profit organization whose membership comprises a large number of U.S. private-sector firms, trade associations, educational institutions, and government organizations concerned with energy development and utilization. The USEA represents the United States on the World Energy Council.

The purpose of the agreement with USEA is to facilitate energy industry "partnerships" between U.S. and host-country energy-oriented organizations under an Energy Sector Partnership Exchange Program (EIPP). Specific EIPP activities can include organizing and conducting seminars; technical exchanges, visits, and study tours by NIS energy personnel in the United States; information dissemination; and internships for NIS personnel in U.S. energy installations. They can also include the promotion

4 of

of sister-relationships between U.S. and NIS organizations having similar functions and interests.

USEA's executive director is Barry Worthington. USEA's offices are located at 1620 Eye Street, NW, Suite 210, Washington, D.C. 20006; telephone number 202-331-0415; fax number 202-331-0418. The USEA will coordinate, as appropriate, their activities with those to be undertaken under the contract to result from this procurement, such that mutual reinforcement of the efforts will result and duplication of efforts will be avoided. The USEA already has a number of activities under way.

During August and September 1992, NIS/TF/EET organized three energy mission to the six NIS countries for the purpose of identifying with energy organizations in these countries, further activities which both sides could consider useful and worth of consideration for funding. This statement of work addresses the procurement of services which have been identified for the petroleum refining industries of Kazakhstan.

INTRODUCTION

The petroleum refining sector of Kazakhstan is emerging from a 75-year period of membership as a republic in the former Soviet Union and of development, technologically and institutionally, through centrally-planned crude supplies, centrally-planned refinery design, and centrally-planned markets originating from the policies formulated by a single source in the government of the former Soviet Union. Now, as an independent country dedicated toward change to market-driven economy, toward preservation of the environment, and toward remedy of past environmental deterioration, the three refineries in Kazakhstan face major technical and financial upheavals in their operations.

Total consumption of major petroleum products in Kazakhstan in 1990, a year not affected by the recent political changes, was about 19.5 million metric tonnes (MMT), of which gasoline was about 4.3 MMT, jet-kerosene about 1.0 MMT, diesel oil about 7.5 MMT, and fuel oil about 6.2 MMT. Due to the restructuring of the economy and subsequent decline in industrial output, as well as the realignment of domestic prices to reach international price levels, the consumption of oil has declined about 20 percent since 1990 and is not anticipated to reach 1990 level again before the end of the decade. The consumption of fuel oil in particular, used in home heating, and electric power generation, is expected to decline significantly.

Kazakhstan has three existing refineries located at Atyrau, Chimkent and Pavlodar with a total capacity of 17 MMT per year. The Chimkent refinery has an on-going program to install a new vacuum distillation unit, fluid catalytic cracking (FCCU), and delayed coking unit. Pavlodar has also a program to add 7 MMT

467

per year distillation capacity with catalytic reforming, and desulfurization facilities for kerosene and diesel. The Government and the State oil company, Kazakhmunaygas, have plans to modernize the Atyrau refinery (built in 1945) by closing down one of the old distillation units (2.0 MMT per year) and replacing by a new 3 MMT per year unit with FCC, catalytic reforming and related facilities to make it an efficient 5 MMT per year refinery. In Chimkent and Pavlodar refineries there is considerable scope for improving overall operational efficiency, energy conservation, safety requirements, product loading and measurement systems, and pollution control measures.

The Government and Kazakhmunaygas intend to improve the operational efficiency and reduce cost of operation in Chimkent and Pavlodar refineries by way of technological upgrading in the existing processing facilities, introduction of advanced instrument control system, energy conservation and pollution control measures.

The thrust of this additional information is to obtain services to carry out on site engineering inspection and preinvestment engineering studies to evaluate the extent of modifications and additions required to these refineries and to estimate the cost of implementing the recommendations.

First, the nature of market demand is likely to change both in quantity and quality. The country could adopt policies which aim at greater independence in the supply of petroleum products. Such policies can act to change trade patterns which existed among the republics when they were part of the former Soviet Union, which in turn could act to reduce or increase demands for all or some of the products from existing refineries. Legislation in the country concerned with emissions from the use of petroleum products could serve to change product specifications such as lead, aromatics, or sulfur content.

Second, the characteristics of the crude supplies could change now that the Kazakhs have independence in determining the source of crude supplies, or when new fields are developed. Changes in crude slates could be major or minor.

Third, greater public awareness of preserving environmental quality and of the environmental deterioration that has occurred during the past seventy-five years are likely to force major changes in refinery design and operating practices to reduce noxious gaseous, liquid, and solid waste emissions. This awareness is likely to emphasize production of unleaded gasolines and alcohol and compressed natural gas alternatives. At the same time changes in refinery operations can be demanded to reduce noxious emissions to the extent practical.

c 3

Finally, tightened economic conditions will force refinery managements to improve operations through introducing more efficient internal utilization of energy and through implementing opportunities for energy conservation. These improvements will have to occur while anticipating changing crude and product slates, and with an inventory of processing units in the refineries that in all likelihood has a limited flexibility to adapt to changes. The roles for alternative fuels could emerge here also.

Compounding the problem of managing changes are shortages of foreign exchange and the desire for new investment and for privatization of their production facilities. Foreign investment by international oil companies in petroleum refining sector opportunities could bring needed foreign exchange and could potentially lead to new refinery construction in strategic locations and the scrapping of some existing refineries.

Obviously, managing the process of change will take some time. The inputs for analysis are not yet completely available. Economic benefits will depend on national policies, formed or as yet unformed. The current crude supply and pricing picture is an unstable one. Foreign investor interest probably varies among the NIS countries and perhaps is not yet well-focused on the petroleum refining sector. Nevertheless, a start in an analysis to improve the situation can be made, provided the focus of initial efforts is on rationalization of the petroleum refining system situation. Rationalization intends (a) energy efficient, effective, and environmentally acceptable improvement in the production of petroleum products to serve current domestic and export markets, (b) adaptation of current operating practices to serve the markets from expected, cost attractive crude oil slates, and (c) identification of the improvements in terms of consistency with the energy pricing and privatization policies in the country.

GOALS, OBJECTIVE, AND SCOPE

Accordingly, the generic goal of the work is to be a process that ultimately can lead to such rationalization of the petroleum sectors in the country. The results shall be disseminated with respect to the Petroleum Sector, to enhance efforts underway in Kazakhstan aimed at privatization of the economy.

Organized technical data collection for the petroleum refining industry in the country. This data may be computerized if warranted, and should comprise available data and information, relevant to producing inputs for later use by others.

Organized financial data collection for the petroleum refining industry in the country. This data will appear in the final reports, organized as indicated by the report outlines in the annexes.

469

process mix in each refinery, the technical capabilities of the process mix to adapt to changing crude and product slates, and current operating practices in a form that (a) provides a data base for undertaking further and future work by others aimed at optimizing the petroleum refining sector and (b) more specifically for the present, enables at least qualitative, if not quantitative, judgements to be made of effects of identified crude slate changes and expected product slate changes on refinery operations and processing limitations.

2. for the Pavlodar and Chimkent refineries, and to a lesser extent, and as appropriate for the Atyrau refinery, address as far as practical the following specific features: engineering inspection of the facilities; review operations of the crude distillation units; review operations of the catalytic reformers; review the design and engineering of the FCCU under construction in the Chimkent refinery; review the design and operation of the FCCU at Pavlodar; review mercaptan sulfur removal for the gasoline product; review product blending operations; review energy efficiency; review control instrumentation systems; review bulk products and crude measurement facilities; review refinery maintenance practices and inventory control; review safety procedures and practices; review waste-water and fuel-gas treatment; review product dispatch facilities; and review product quality control facilities.

3. organize and conduct seminars or conferences that will disseminate to a national audience in the host country the results of the work and that will encourage emulation in other petroleum refineries and energy-intensive industries in the country.

APPROACH

This work statement is intended to be generic. The intent is to undertake the work with field teams of qualified personnel, essentially simultaneously. The field teams will be supported as appropriate by a home office team. The work of the teams will be coordinated by a program director, who also will be responsible for the production of the final reports in a homogenous fashion and for the dissemination of the results.

In order to permit pragmatic planning for efficient accomplishment of the work, the first activity will be a reconnaissance visit, probably lasting one week, during which needed technical and administrative inputs will be developed and needed local support arranged for. In order to gauge the effectiveness of the work and to permit the dissemination of the results, submit final reports in draft to the host-country government for review and comment.

Furthermore, in the identification of energy consumption and environmental impact improvement opportunities, expectations are that benefit/cost estimates will be prepared and/or evaluations performed as far as practical. Calculations and estimate preparation will likely require assumptions to fill in for lack of data. These assumptions shall be clearly stated with suggestions for their resolution.

Portable equipment purchases needed for testing or measuring operating conditions during the field work shall be defined and justified for purchase. A brief report, including summaries of competitive bids, shall be submitted for USAID approval before committing to purchase.

DEFINITION

Petroleum refineries may be closely linked both physically and through refinery products that become feedstocks to downstream petrochemical complexes. The work shall be confined to petroleum refineries only. For this purpose, the refinery shall be defined as comprising all installations that pertain to the supply and transport of crude oil and distribution and marketing of the refinery products, receipt of the crude oil through the processing to the storage of the refineries' primary products. A primary product shall be defined as one that has been fully processed as to be marketable. On-site facilities that blend different gasoline streams and process them to final specifications are refinery units. Refinery gas and/or liquid streams that are delivered to other units for further processing, such as to ethylene, ammonia, or aromatic extractions, are to be considered as finished products.

The following definitions shall apply to "immediate," to "medium-term," and to "long-term" as modifying improvement opportunities.

For energy consumption reduction:

"<u>immediate</u>" opportunities are those which require changes in operating conditions with or without nominal equipment modifications, those which appear manifestly justified, and those which appear implementable within the staff resources of a refinery and at a cost of less than the equivalent of, say, in the vicinity of U.S. $100,000.

"<u>medium-term</u>" opportunities are those which require formal justification, infusion of capital from external sources, and possibly the services of externally obtained experienced personnel for implementation.

"<u>long-term</u>" opportunities are those involving abandonment of major processing units, major modernization (or revamping) of

existing units, and/or the construction of new processing units. The justification would occur through market, rather than technical, analyses of crude supply slates and product slates.

For environmental impact reduction:

"immediate" opportunities are those which require changes in operating practices with our without nominal equipment changes, those which appear manifestly in the public interest, and those which appear implementable within the staff resources of the refinery for the equivalent of, say, in the vicinity of U.S. $100,000.

"medium-term" opportunities are those which require infusion of capital from external sources, possibly the services of externally obtained experienced personnel for implementation, and the exercise of some balance between allocating costs between public agencies and the refinery, if the refinery is to remain viable.

"long-term" opportunities are those in which the opportunity is high cost and represents "clean-up" of accumulated pollution from past neglect, or those representing a "high-cost clean-up" where the refinery is a minor member in a group of neighboring, high-polluting industries.

TASKS

The first task shall be to undertake the reconnaissance visit by the Contractor to Kazakhstan, collect all relevant information, establish contacts with prospective local personnel who can assist the Contractor's field team, arrange for local cooperation from the government ministries and counterpart personnel (including the release of all relevant information), and other such facilities.

The results shall be organized as a written work plan for the tasks specified below and submitted for USAID approval before subsequent work is undertaken. The work plan shall emphasize cost effective travel and contain a detailed schedule to be followed to accomplish the tasks. As quickly as practical at the beginning of the work, produce the outlines in detail expected for the final reports. Disseminate the outline to USAID/Washington, and USAID/Almaty.

Upon approval, the Contractor shall, with one team visiting all three refineries, undertake and complete the tasks relating to the following, including the dissemination of the results.

1. Refining Industry Privatization Options

472

The following tasks are currently foreseen to explore privatization options for the country's petroleum refining industry. The intention is to avoid efforts to compile data of a statistical nature in order to permit analysis and evaluation. Instead, the contractor's efforts in these respects shall be analyses and evaluations of relevant existing statistical compilations. USAID will make available to the contractor data compilations which have resulted from current or past USAID funded activities. The contractor should obtain other relevant data compilations as far as is practical to do so.

(a) Refinery History: Narrate the history and performance of each refinery during the last five years.

(b) Product Slate Demand Conditions: Compile as far as practical, up to the previous five years, the marketable products produced by each refinery. Review and describe governmental environmental protection policies and actions and the economic condition in each country which can affect the properties of refinery products to be produced in the future. Assess as far as practical, up to five years into the future, the products, product specifications, and quantities to be produced by the refineries.

(c) Product Pricing: Review and present as far as practical, the policies, methods, and history of product pricing. Analyze the relationships between oil product pricing, the organizations receiving the revenues, and the impact on the refining industry's financial position. The data evaluation should foresee their ultimate usefulness in implementing privatization policies for the refining industry.

(d) Crude Supply Conditions:

(1) Compile as far as practical, up to the previous five years, the sources, properties, and quantities of crude oil charged by the refineries. Assess as far as practical, up to five years into the future, the prospective sources, properties, and quantities of crude oil to be charged by the refineries. Review and report on the crude pricing policies that have been followed in the past and what these policies might be in the future.

(2) Review current crude supply agreements to analyze current and potential payment and supply problems for refineries, and recommend feasible alternatives.

473

(e) Taxation: Analyze the existing taxation system applied to the petroleum sector and make recommendations on preferential tax treatment.

(f) National Environmental Protection Policy: Review and identify as far as practical the country's existing laws and regulations protecting the environment, especially as these will affect the operations of petroleum refineries and the use of the refinery products. Assess the possible changes that appear on the horizon that can further affect refinery operations and product utilization.

(g) Refining Industry Capabilities: Prepare by refinery a summary technical description of the refining capabilities. The work should include a block flow diagram showing the processing units and the support facilities between receipt of the crude oil and the dispatch of the product slate to the markets. The depth of detail for this element of the characterization shall provide, but not necessarily be limited by:

(1) a description, as far as practical, of the capability of selected important processing unit in terms of feedstocks and feedstock variability and product yields and specifications; of the operating conditions, age, and mechanical condition of the processing units; of the consumption of utilities (electricity, water, catalysts, chemicals, etc.); and the quantities and characteristics of the effluents.

(2) a description, as far as practical, of the support facilities in terms of crude and product storage capacity, fire protection and personnel safety provisions, and methods for segregation, collection, treatment, and disposal of solid, liquid, and gaseous wastes.

(3) a written operating history of each refinery for the previous 12-month period emphasizing crude oil receipts and specifications, product slates produced, unusual operating experiences, routine maintenance performed, and emergencies encountered during operations.

(4) a description of the method of utility supply; whether entirely purchased, self-generated, or a combination of both;

(h) Refinery Financials: Provide a description of the

financial practices that have been followed in the past, and which appear to be the practices to be followed in the future. The description should address such items as the identification and analysis of important cost components in the operations of each refinery, including salaries and fringe benefits, taxes, and subsidies; how the refinery products are priced at the plant gate; how the revenues are managed; crude oil procurement and payment policies; the degree to which refinery management can be independent in managing finances; what procedures might be followed to finance and implement major and minor changes to refinery installations; and wage and salary policies. Describe the relationships among petroleum product pricing, the organizations receiving the revenues, and impacts on refinery financial positions. Included should be assessments needed regarding changes in product pricing and in financial management, if the refining enterprises are to be amenable to privatization of the ownership.

(i) Comparison Overview: Describe the critical elements which led to successful privatization of the petroleum sector in other countries, including the importance of an attractive investment climate for foreign investors. Analyze the managerial organization of Kazakh oil refineries, compare with world experience, and make recommendations. Analyze salaries and wages, and taxes and tax preferences, in oil refineries, compare with world experience, and make recommendations. Review product pricing by each refinery and compare results with internationally-posted product prices (including the effects of freight charges). Given the foregoing and results of the above, present a comparison between the results for the Kazakhstan and the corresponding practices followed in Western refineries, particularly those in the United States.

(j) Observations: Present a series of observations that outline and define problems in the refineries in each country for which, in the opinion of the Contractor's teams, short-term, medium-term, and long-term solutions should be found. Include problems that are operational nature, that relate to apparent opportunities to reduce energy consumption in the operations, that relate to opportunities to reduce environmental impact, and that relate to obstacles to be overcome in financial management which can restrict implementation efforts for problem solving.

(k) Privatization Options: Based on the above observations, identify options that should be considered in

475

planning for the privatization of the industry, such as employee ownership, integration with privately owned crude oil production or procurement and/or product marketing, or combinations of these. Provide an evaluation of the options in terms of problems and obstacles to their implementation. There is no requirement to recommend an option.

2. Energy Conservation, Operations and Environmental Audit and Evaluation

The following tasks are currently foreseen to enable the audit and evaluation for the three refineries for energy conservation, operations and environmental impact, as far as practical.

(a) Refinery Energy Balance and Consumption: The work involves analysis of the flows of energy among the different processing units comprising each selected refinery, as well as within the process units themselves, in order to identify opportunities for energy efficiency improvement in the short, medium, and long term to the extent practical.

The analysis should attempt to provide data to assist others to foresee the longer-term opportunities for a more efficient energy balance through a future review of the market demand, crude oil supplies, and the design and applicability of the processing units themselves. Ultimately, the product of such analyses by others could be decisions to abandon certain units, modify others, or add new units, all providing for greater thermal efficiency.

Accordingly, the Contractor shall attempt to foresee, as far as practical, that his identification of a long-term energy reduction or environmental improvement opportunity for a particular processing unit might be invalidated at a later date. The reason would be that a unit could be abandoned before full benefits from the cost of the improvement have been obtained.

(b) Process Unit Description & Operating Conditions: Describe each refinery's process units in terms of feedstocks, processing, technologies, and product yields; compile operating conditions, and mechanical conditions of the processing units in the refineries; utility consumption data for each refinery; the method of electricity supply to each refinery; and the design and operation of the refinery power house. The work involves analyzing the operating conditions and control systems installed for each processing unit in a

46

selected refinery in order to determine whether these are appropriate for the products from the feedstock. This analysis can be particularly significant if current feedstocks and/or product slates have changed from the conditions for which the original design of the process unit was based.

The Contractor is not required to analyze every process unit within the refinery no matter how small in its function. Instead, he shall rank all discrete processing units within the refinery in order of their importance in the refinery operations, stating the criteria (which should be relevant to the objectives of the work) he has employed for such ranking. He shall then employ best efforts to evaluate each process unit from top down to the extent time availability of refinery cooperation permits. If he judges non-evaluated process units as worthy of evaluation, he shall make such recommendations in his report.

(c) Heat Conservation: The work involves observations over a period of time to evaluate the adequacy of provisions to recover heat that otherwise is wasted. The best example is a lack of combustion air preheaters to recover heat from hot chimney gases in refinery furnace installations. Another example is to review the design of feedstock preheat heat-exchange trains for an opportunity to introduce an additional heat exchanger, or exchangers, that can be justified now because of higher energy prices.

(d) Refinery Housekeeping: The work involves observation, over a period of time, of the refinery operations, in order to detect opportunities to improve operating and maintenance practices, by:

(1) eliminating the presence of leaky valve-stems and steam traps.
(2) incrementally insulating excessively hot surfaces
(3) avoiding poor combustion conditions (high oxygen content in chimney gases because of excessive combustion air and/or leaky furnace settings).
(4) increasing the frequency with which heat transfer surfaces are cleaned of fouling deposits.
(5) reviewing whether plant instrumentation is adequate and/or well enough maintained to provide accurate readings of operating conditions, and is appropriately configured to permit efficient operation.

(e) Fuel Switching: The work shall include comment and expert opinion on the practicality of replacing petroleum hydrocarbon fuels with indigenous coal in firing refinery furnaces. Refinery furnaces have in the past been fired with coal. Fuel switching to coal to increase the availability of oil for export or to reduce the need to import could be a viable option.

In this context, Russia has been a leader in commercial production and utilization of "liquid" coal/water suspension fuels, although the present status of this technology is not well known. Consideration of such an option should be limited to assessing its practicality in terms of coal supply and characteristics, the state-of-the-art of fuel formulation, and the adaptability of existing combustion equipment.

(f) Refinery Emissions: The work shall involve preparing a survey of all solid, liquid, and gaseous refinery effluents in terms of sourcing, probable quantities, characteristics, and chemical analyses; existing methods for segregating, collection, treating, and disposing solid, liquid and gaseous wastes; and of suggesting practices to be employed in the refinery for control to reduce such emissions. The practices suggested shall reflect experiences elsewhere where strict environmental emissions controls laws are in effect.

SCHEDULE

The work shall be completed with final reports submitted and final presentations and dissemination conferences completed on or before February 30, 1994, including the period for submission of the work plan.

COUNTERPART PERSONNEL

During the reconnaissance period, the Contractor shall identify or arrange for categories of counterpart personnel to participate in the work as follows:

(a) By the Host Country
Counterpart personnel are expected to be provided, in order to provide for continuity for future work within each selected refinery (and for other refineries in a country that have not been selected for detailed audit and evaluation). Each refinery management is expected to appoint a cadre of approximately four persons matching the skills of the Contractor's field team to serve as counterparts. The intention is for the counterparts to be fully involved in the work, including the collection of data

and information and their evaluation.

The refinery's counterpart team, as far as practical, is expected to remain available to implement, for this particular refinery, opportunities for energy efficiency and environmental-impact improvement that can be immediately justified. This team is also expected to participate in future efforts to implement those opportunities that are considered to be medium or long term. The Contractor is not required to undertake any efforts to bring counterpart personnel to the United States for any purpose. If he determines that such a visit can be productive, especially if this could help in the implementacion of his results, he shall describe such an effort and make this a recommendation from his work.

During the period for performance of the work, this team shall be the primary focus for training or exposure to practices in U.S. refineries. The Contractor shall consult with the United States Energy Association with respect to arranging the invitational travel to the United States and the refineries to be visited.

(b) By the Contractor
To the extent practical, in each country the Contractor shall retain the services of qualified consultants to assist in the work. The prospect that the Contractor can supplement his field team with local consultants, who could begin advance field work as well as extend the efforts during the Contractor's field work, should increase the cost-effectiveness of the efforts.

TEST EQUIPMENT

As part of the activities during the reconnaissance period, test equipment shall be identified that will be necessary to accomplish the work specified in the Tasks. The equipment shall be the minimum required for one refinery and of a portable nature. Upon completion of the work in each country, this equipment will be granted to the appropriate host-country organization. The Contractor shall be responsible for the competitive procurement of the equipment and its maintenance in an operable condition for the duration of the work.

REPORTS

The Contractor shall prepare a written work plan based on the results of his reconnaissance visit and submit this report to USAID for comment and approval before continuing with the work.

A single, stand-alone report shall be prepared for Kazakhstan covering the details and the results of the work for the petroleum refining industry. The format for this report and organization of its content shall be agreed to with USAID during the course of the work. Upon completion of the data and information collection and their evaluation, the Contractor shall prepare a draft version of the final report, complete in all its detail, and submit this for review and comment by the host-country organization and by USAID.

After submittal of the final report, the Contractor shall make an oral presentation of his results to a Washington audience that can include representatives from the World Bank, USAID, and representatives from private firms having a potential interest in investment in Kazakhstan's petroleum sector. The Contractor shall prepare a summary report of his findings for this purpose.

The Contractor shall incorporate comments and suggestions received, as appropriate, in producing the final report. The final report shall be available before the conferences/seminars organized for disseminating the results. At least the Executive Summary shall have been translated into the local language and incorporated in the final report.

A separate, stand-alone shall be prepared. The format for this report and organization of its content shall follow the specifications in Annex 2 to this Statement of Work. Upon completion of the data and information collection and their evaluation, the Contractor shall prepare a draft version of the final report, complete in all its detail, and submit this for review and comment by the host-country organization and by USAID. The Contractor shall incorporate comments and suggestions received, as appropriate, in producing the final report. The final report shall be available before the conferences/seminars organized for disseminating the results. At least the Executive Summary shall have been translated into the local language and incorporated in the final report.

The Contractor shall submit, and orally present in Washington, a letter report to USAID after the conclusion of each conference/seminar containing an overview description of the proceedings, appropriate observations of its effectiveness, conclusions that may have been reached, and a list of participants and their affiliations.

150

If the Contractor undertakes computerized process simulation work, this shall be based on the refinery providing the appropriate refinery operating data from recent operations. If data available are found to be inadequate, and the Contractor believes the simulation work to be critical for improving refinery operations, he shall recommend a data acquisition program, and the method for utilizing the results, in his final reports.

APPENDIX B

THE REFINERY QUESTIONNAIRE

JOHN BROWN

Technical and Environmental Questionnaire
for
Characterization Report

Refinery Input

USAID NIS Petroleum Refinery Program -
Kazakhstan & Ukraine

REFINERY

CHARACTERIZATION

QUESTIONNAIRE

TABLE OF CONTENTS

		PAGE NO.
1.	General	1
2.	Refinery Configuration (including Material Balances)	4
3.	Properties and Specifications of Feeds and Products	7
4.	Refinery Process Units	14
5.	Utility Information	14
6.	Off-Site Facilities	24
7.	Operating Cost Data	26
8.	Environmental Aspects	27

APPENDIX

485

LIST OF TABLES AND FIGURES

3-1	Crude Oil Properties	8
3-2	LPG Properties	10
3-3	Gasoline Properties	10
3-4	Jet Fuel Properties	11
3-5	Diesel Fuel Properties	12
3-6	Fuel Oil Properties	13
5-1	Steam System	15
5-2	Water Treatment	16
5-3	Water System	18
5-4	Water Analysis	19
5-5	Fuel Gas Data	22
5-6	Electrical Power	23

FIGURES

2.1	Generic BFD (Simple Refinery)	5
2.2	Generic BFD (Integrated Refinery)	6

1. GENERAL

1.1 NAME AND LOCATION

Name: _____
Location: _____

_____
_____

1.2 CORRESPONDENCE

Correspondence relating to this project shall be directed as follows:

To the Refiner:

Name: _____
Address: _____
_____
_____
Attention: _____
Telephone No: _____ Telex No.: _____
Ext.: _____ TWX: _____
Telecopier Model: _____
Telecopier No.: _____

To John Brown

Name: John Brown E&C
Address: 300 S. Riverside Plaza
Suite 1800
Chicago, Illinois 60606 USA
Attention: _____
Telephone No: (312) 669-7000 Telex No.: 190146

(FAX)Telecopier No: (312) 902-1236
Telecopier Model.: _____
In operation 24 hours per day

-487-

1.3. SCOPE OF FACILITIES

Provide a general overall description including infrastructure - a history of operations, year originally built, type of facilities (fuel, lube oil) fully integrated into petrochemicals, etc.) year of major revamps, location, number of employees.

1.4 SYSTEM OF MEASUREMENT

Indicate from the following, the units being followed by the refinery.

	ENGLISH	MKS	SI
Temperature	°F	°C	°C
Pressure	psi	kg/cm²	kPa
Mass	lb	kg	kg
Length	ft-in	m-mm	m-mm
Relative Density	Spec Gravity T°F/60°F	Spec Gravity T°C/15°C	Spec Gravity T°C/15°C
Absolute Density	°API or lb/gal at 60°F	kg/m³ at 15°C	kg/m³ at 15°C
Flowing Density	lb/ft³	kg/m³	kg/m³
Flowing Quantities			
Mass	lb/hr	kg/h	kg/h
Vapor	ft³/sec	m³/h	m³/h
Liquid	U.S. gal/min	m³/h	m³/h
Standard Quantities			
Vapor	10^6 std ft³/day at 60°F	normal m³/h at 0°C	std m³/h at 15°C
Liquid	bpd at 60°F	std m³/h at 15°C	m³/h at 15°C
Enthalpy	Btu/lb	kcal/kg	kJ/kg
Heat Rate	10^6 Btu/hr	10^6 kcal/hr	MW

It will be assumed that all data provided by refinery will be in the above units, unless noted otherwise.

489'

2. REFINERY CONFIGURATION

2.1. REFINERY BLOCK FLOW DIAGRAM

Provide a Block Flow Diagram similar to Figures 2.1 or 2.2.

Figure 2.1 is a generic Block Flow Diagram for a very simple refinery, with the exception of a TOPPING UNIT or a LUBE OIL REFINERY.

Figure 2.2 is generic Block Flow Diagram for a fully integrated refinery. This figure is only for reference, not many refineries consist of that many units.

The Desalter is not shown on the Block Flow Diagram. However, it should be shown if it does exist.

2.2 OVERALL MATERIAL BALANCE

Show design basis, tonnes/per year:

Crude oil throughput:
Imported Blending Stocks:

Products:

LPG:
Regular Gasoline:
Premium Gasoline:
Solvents:
Feeds to Aromatic Complex:
Feeds to Petrochemical Complex:
Aviation Fuels:
Diesel Fuels:
Heating Oils:
Lube Oils:
Greases:
Asphalts:
Industrial Fuels:
Coke:
Sulfur
Etc.:

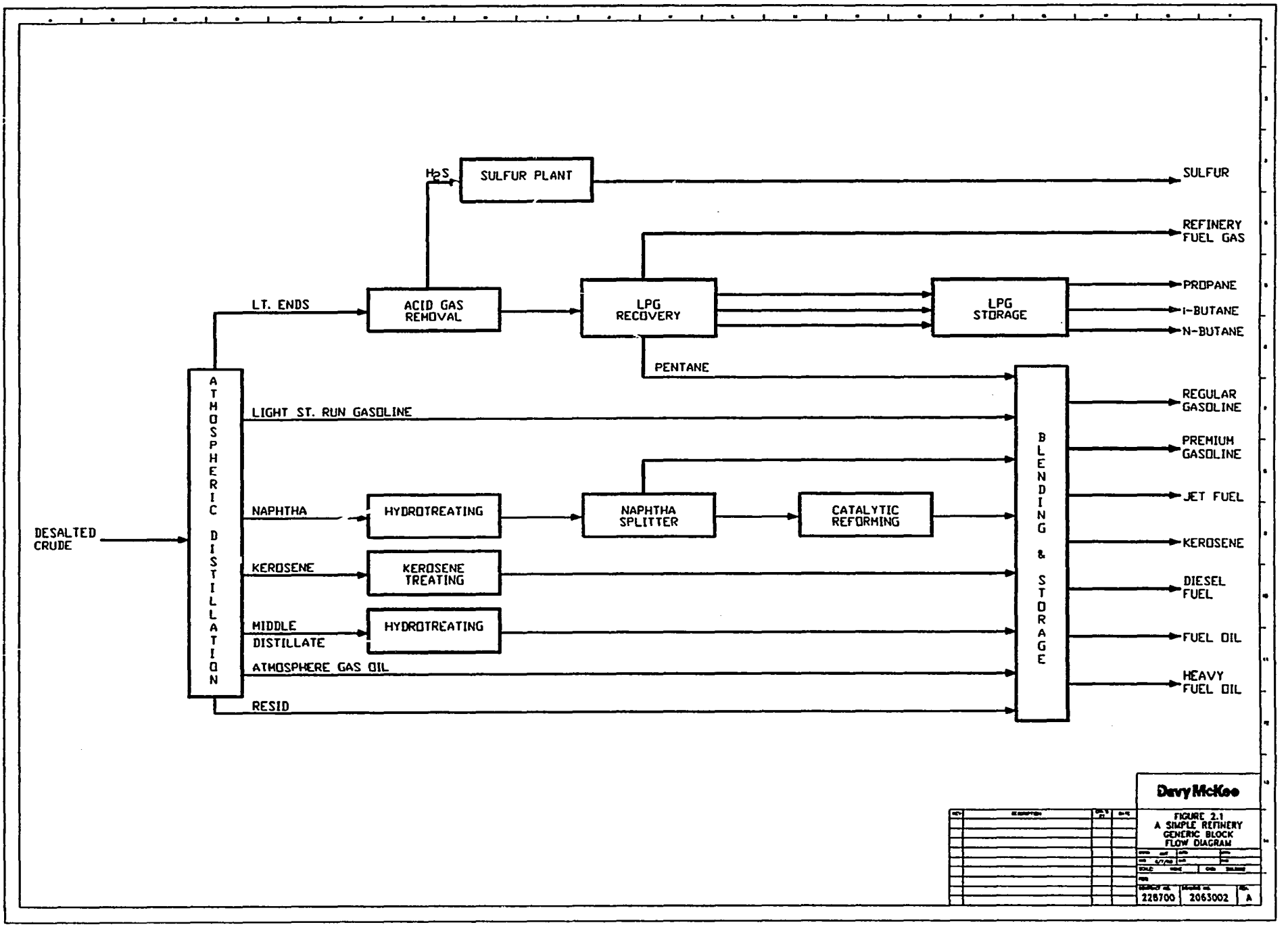
DESALTED CRUDE
ATMOSPHERIC DISTILLATION
LT. ENDS
ACID GAS REMOVAL
H2S
SULFUR PLANT
SULFUR
LPG RECOVERY
REFINERY FUEL GAS
LPG STORAGE
PROPANE
i-BUTANE
N-BUTANE
PENTANE
LIGHT ST. RUN GASOLINE
NAPHTHA
HYDROTREATING
NAPHTHA SPLITTER
CATALYTIC REFORMING
KEROSENE
KEROSENE TREATING
MIDDLE DISTILLATE
HYDROTREATING
ATMOSPHERE GAS OIL
RESID
BLENDING & STORAGE
REGULAR GASOLINE
PREMIUM GASOLINE
JET FUEL
KEROSENE
DIESEL FUEL
FUEL OIL
HEAVY FUEL OIL
Davy McKee
FIGURE 2.1
A SIMPLE REFINERY
GENERIC BLOCK
FLOW DIAGRAM
228700
2063002
A

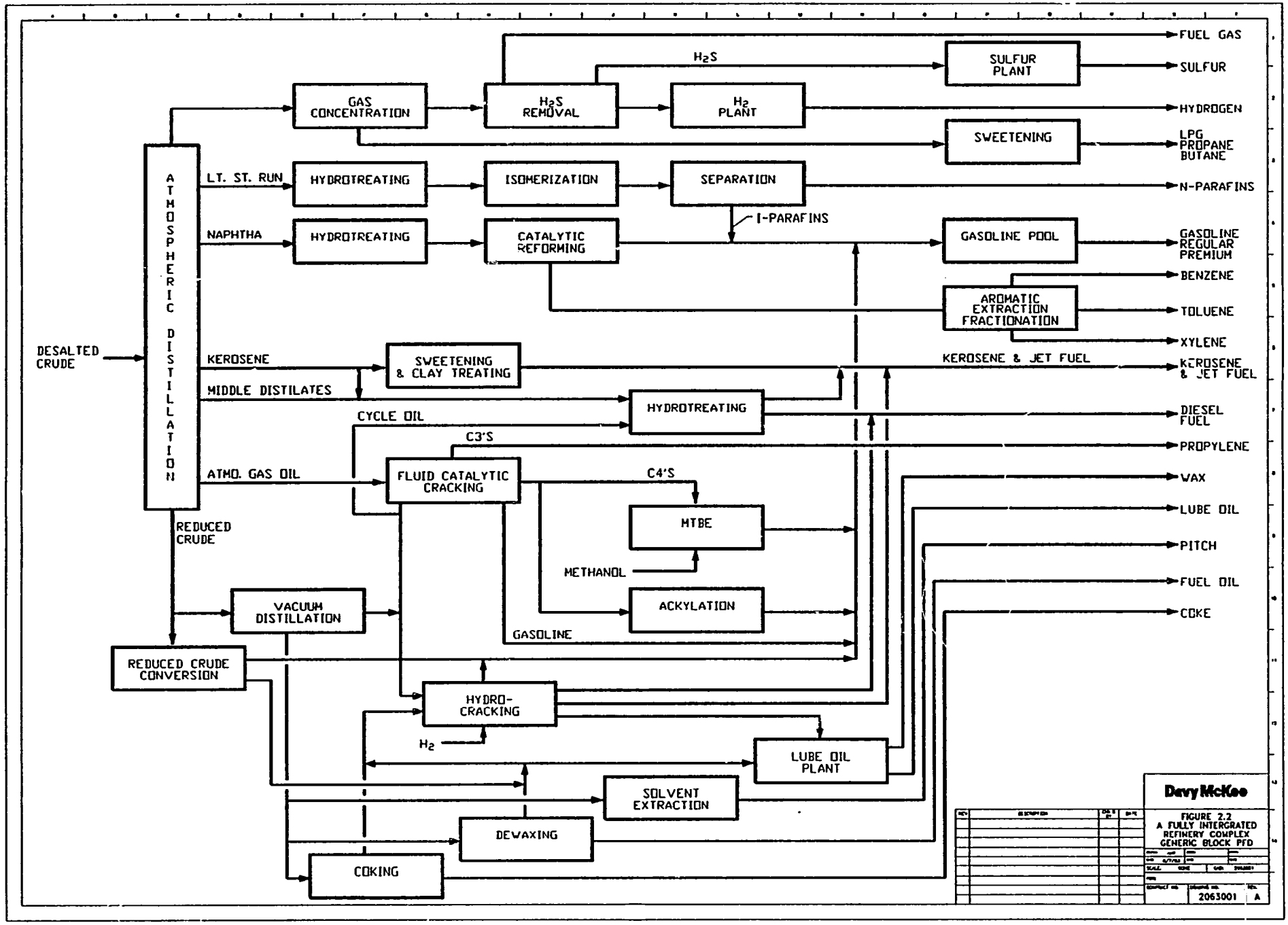
DESALTED CRUDE
ATMOSPHERIC DISTILLATION
LT. ST. RUN
NAPHTHA
KEROSENE
MIDDLE DISTILATES
ATMO. GAS OIL
REDUCED CRUDE
GAS CONCENTRATION
HYDROTREATING
HYDROTREATING
SWEETENING & CLAY TREATING
CYCLE OIL
FLUID CATALYTIC CRACKING
VACUUM DISTILLATION
REDUCED CRUDE CONVERSION
H_2S REMOVAL
H_2 PLANT
ISOMERIZATION
SEPARATION
CATALYTIC REFORMING
I-PARAFINS
HYDROTREATING
C3'S
C4'S
MTBE
METHANOL
ACKYLATION
GASOLINE
HYDRO-CRACKING
H_2
LUBE OIL PLANT
SOLVENT EXTRACTION
DEWAXING
COKING
H_2S
SULFUR PLANT
SWEETENING
GASOLINE POOL
AROMATIC EXTRACTION FRACTIONATION
KEROSENE & JET FUEL
FUEL GAS
SULFUR
HYDROGEN
LPG PROPANE BUTANE
N-PARAFINS
GASOLINE REGULAR PREMIUM
BENZENE
TOLUENE
XYLENE
KEROSENE & JET FUEL
DIESEL FUEL
PROPYLENE
WAX
LUBE OIL
PITCH
FUEL OIL
COKE
Davy McKee
FIGURE 2.2
A FULLY INTERGRATED REFINERY COMPLEX GENERIC BLOCK PFD
2063001
A

2.2.1 Provide the names and monthly (average) consumption quantities of various chemicals (treating, process, corrosion inhibitors, etc.) and catalysts. Include gasoline additives such as MTBE, TEL, etc., and additives for lube oils.

3.0. PROPERTIES AND SPECIFICATIONS OF FEEDS AND PRODUCTS

3.1 Feeds to Refinery

3.1.1 For Crude Oil (or oils) processed, provide properties for each of the crude oils processed as indicated in Table 3-1.

In addition to Table 3-2, the following would be required (for each crude oil) to perform an analysis of atmospheric crude distillation:

1. TBP Curve, with mid-volume plots of gravity, viscosity, and sulfur.

2. Light ends analysis up through hexanes.

3. Characterization factor (UOP or Watson k) for the whole crude.

4. For vacuum unit (if it exists), provide vacuum distillation (D-1160) for residua.

TABLE 3-1 CRUDE OIL PROPERTIES

Crude Name Source (Country)				
Crude Inspection				
Gravity, °API or Sp. Gr. at 20°C				
Sulfur, wt%				
Pour Point, °C				
Viscosity, cs at 20 °C				
Conradson Carbon, Wt%				
Asphaltenes & Resins, vol%				
Metals, Ni+Va, PPM				
Gasoline, C_1 - 405 °F (C_5 - 207 °C)[1]				
Yield, Vol%				
Sulfur, Wt%				
Octane, F-1, 3 ml TEL				
Gravity, 15°C				
Light Gas Oil, 405 - 650 °F (207 - 344 °C)[1]				
Yield, Vol%				
Gravity, °API or Sp. Gr. at 20°C				
Sulfur, Wt%				
Pour Point, °C				
Characterization Factor				
Heavy Gas Oil, 650 - 1000 °F (344 - 538 °C)[1]				
Yield, Vol%				
Gravity, °API or Sp. Gr. at 20°C				
Sulfur, Wt%				
Viscosity, cs at 50 °C				
Wax Content, Wt%				
Characterization Factor				
Residuum, 1000 °F Plus [1] (538°C)				
Yield, Vol%				
Gravity, °API or Sp. Gr. at 20°C				
Sulfur, Wt%				
Viscosity, cs at 50 °C				
Viscosity Index of Dewaxed Lubricating Oil				

NOTE 1: **Temperature range of product cuts is only an example. The refinery may use temperature ranges more appropriate for their products.**

3.1.2

(Rework, slops, intermediate feeds from other sources)

4/95

Indicate the following properties of various products:

TABLE 3-2 LPG (LIQUEFIED PETROLEUM GASES)

Composition	PROPANE	BUTANE	LPG
Vapor Pressure at 38°C			
Volatile Residue			
Butane and Heavier, LV% (Max)			
Pentane and Heavier, LV% (Max)			
Residual Matter			
Corrosion, Copperstrip, Max.			
Total Sulfur, ppmw			
Moisture Content			
Free Water Content			
Bottled at Refinery?	YES/NO	YES/NO	YES/NO

TABLE 3-3 GASOLINE

Type	Regular	Premium
Gravity @ 20°C		
Octane Numbers RON MON		
Distillation, Volume 10% 50% 90% EP		
Distillation Residue,%Wt		
RVP		
Sulfur Content, %Wt		
MTBE Content, vol%		
TEL Content (if any)		

496

Type		
Gravity @ 20°C		
Distillation, Volume IBP 10% 50% 90% EP		
Distillation Residue, % Wt		
Viscosity @ 20°C		
Aniline Point °C		
Freeze Point °C		
Flash Point °C		
Total Sulfur, Wt. %		
Mercaptan, Wt. %		
Aromatic Content, Vol %		
Doctor Test		
Smoke Point		
Gum, mg/100 ml		
Net Heat of Combustion		

Type		
Gravity @ 20°C		
Distillation, Volume IBP 10% 50% 90% EP		
Viscosity @ 20°C		
Pour Point °C		
Flash Point °C		
Sulfur Content, ppmw		
Carbon Residue		
Ash		
Water and Sediment, % Vol.		
Corrosion, Copper Strip		
Cetane Number, Min.		

Type		
Gravity @ 20°C		
Distillation, Volume 10% 90%		
Viscosity @ 20°C		
Flash Point °C		
Pour Point °C		
Sulfur, % Wt.		
Carbon Residue %		
(on 10% bottoms)		
Ash, % Wt.		
Corrosion, Copper Strip		

3.3.6 Provide properties and specifications of any other products from the refinery; such as, sulfur, lube oils, pitch, greases, coke, asphalts, road oils, tars, solvents, petrochemicals and aromatic feed stocks produced in the refinery, etc.

499

5.0 UTILITY INFORMATION

5.1 Steam System (and Hot Oil System, if it exists)

Provide details of on-site steam generation, i.e., type of boiler (gas, oil, or coal fired).

Provide Boiler Capacity and steam quality.

Provide details of Boiler Blowdown disposition.

5.1.1 Systems may be identified in general terms such as High Pressure, Medium Pressure, Low Pressure, etc., or as nominal pressure levels such as 600 PSIG, 150 PSIG, etc.

Minimum steam pressures and temperatures are the lowest pressures and temperatures which may be expected at any point in the area header.

Normal steam pressures and temperatures are the pressures and temperatures which may be expected at any point in the area header.

Maximum steam pressures and temperatures are the highest pressures and temperatures which may be expected at any point in the area header.

Design pressures and temperatures are the conditions specified for the mechanical design of piping and equipment.

TABLE 5-1 STEAM SYSTEMS

System Identification	Pressure				Temperature			
	Min	Norm	Max	Design	Min	Norm	Max	Design

If there are more than one condensate systems, describe each separately.

The typical condensate system may contain a drum or receiver anywhere in the refinery.

5.1.3 Hot Oil System

Provide details of the Hot Oil System(s) (or belt), if used in the refinery.

Provide specifications of the hot oil used.

501

5.2.1 Is untreated surface water used directly as cooling tower make-up water?
YES/ NO

5.2.2 Describe the treatment of raw water for the following uses and provide generic names of chemicals used:

(1) potable water,
(2) water used for purposes other than BFW and cooling tower.

5.2.3 Boiler Feed Water (BFW)

Provide the following information about the chemical treating used in steam generators and corrosion control treatment for steam and condensate systems.

TABLE 5-2 WATER TREATMENT

System Identification	Method of Feeding And Location of Feed Point	Chemical Used

Describe the Cooling Water System. If more than one, describe each system and identify the units it serves. For each system, provide the following:

If it is a once through type system, provide the source of the cooling water. Describe the type of water treatment and the chemicals used.

If it is a closed cooling water system, provide the type and number of cooling towers. Identify the generic names of chemicals used for treatment.

Provide the destination of the cooling tower blowdown.

Provide the capacity of the cooling water pumps and indicate number of operating and spare pumps. Indicate, if any, steam turbine driven pumps are installed.

5.2.5 Provide following information on water system

TABLE 5-3 WATER SYSTEMS

DESCRIPTION	REFINERY RAW WATER SUPPLY	ONCE-THROUGH COOLING WATER	CIRCULATING COOLING WATER	TREATED BOILER FEEDWATER
Source				
Supply Temperature, ° _____ C				
Supply Pressure, _____ At battery Limits at Grade				
Return Pressure, _____ At battery Limits at Grade				
Exchanger Inlet Water Temperature, ° _____ C				
Exchanger Outlet Water Temperature, ° _____ C (Max)				
Exchanger Water Side Design Temperature, ° _____ C				
Exchanger Water Side Design Pressure, _____				
Fouling Resistance				

503

TABLE 5-4 WATER ANALYSIS

Description	Refinery Raw Water Supply	Once Through Cooling Water	Circulatin g Cooling Water	Treated Boiler Feedwater	
pH					
Total Hardness as $CaCo_3$, mg/c					
Calcium as $CaCo_3$, mg/c					
Magnesium as $CaCo_3$, mg/c					
Total Alkalinity as $CaCo_3$, mg/c					
"P" Alkalinity as $CaCo_3$, mg/c					
Sulfate as SO_4, mg/c					
Chloride as Cl, mg/c					
Silica as SiO_2, mg/c					
Iron as Fe, mg/c					
Total Dissolved Solids, mg/c					
Suspended Solids, mg/c					
Turbidity, mg/c					
Conductivity, μmhos					

Provide a description of the refinery fuel system. Indicate the amount and type of fuel being imported into the refinery.

5.3.1 Coal as Fuel

If coal (or coals) is used as a fuel, provide complete analysis and net heating value. Describe current coal receiving, storage, handling and preparation systems. Indicate if coal is the primary or supplemental fuel.

5.3.2 Liquid Fuels

If liquid fuels, such as, LPG, Naphtha, Fuel Oils, etc., are used as fuels, provide descriptions of the systems. The system may include receiving, storage, pumping and distribution. Provide analysis, including heating valve.

5.3.3 Fuel Gas

Provide a description of the fuel gas system, i.e., fuel gas drum, operating conditions and distribution. Provide analysis including heating valve. See Table 5.5

Indicate the properties of pilot gas if not supped from the refinery fuel gas header, (i.e., imported into the refinery).

A. Is the existing fuel gas system steam traced? YES/NO.

B. Is the existing fuel gas system provided with liquid knockout drum? YES/NO

5.3.4 Show quantity of coal, liquid fuels and fuel gas actually burned in the last two (2) years.

505

TABLE 5-5 FUEL GAS DATA

PROPERTY	SOURCE	
	REFINERY	IMPORTED
Composition (Volume *)		
H_2S		
H_2O		
CO		
CO_2		
O_2		
N_2		
H_2		
C_1		
$C_2 =$		
C_2		
$C_3 =$		
C_3		
$C_4 =$		
C_4		
iC_4		
nC_4		
C_5		
iC_5		
nC_5		
$C_6 +$		
TOTAL	100%	100 %

Describe the on-site power generation, i.e. type of turbo-generator and its driver.

If electrical power is imported, indicate the source.
Describe the overall electrical system, including stepdown, distribution, load shedding, power factor, grounding system, reliability, (in terms of ratio of blackout time to the total time) etc.

Provide information on emergency electrical power generation.

Provide the following information relating to the electrical power system:

TABLE 5-6 ELECTRICAL POWER

Service	Horsepower Range		Name Plate Voltage	Phase	Frequency (Hertz-Hz)
	From	To			
Motors					
Instruments					
Lighting					

07

Provide the capacity and type of air compressors, coolers and driers. Indicate the sparing policy.

Does system furnish oil free air? YES/NO

Indicate dew point for instrument air: _____°

Indicate system header pressure: _____.

5.6 REFRIGERATION SYSTEM

Provide the type, capacity and purpose of any refrigeration system.

Indicate the refrigerant used.

5.7 INERT GAS SYSTEM

Indicate the source of inert gas and its quality.

If on-site inert gas generation is available, provide details of the equipment, capacity, etc.

508

The refinery off-site facilities utility system normally consists of the following:

6.1 Flare and Blowdown Systems.

Provide size (Tip Diameter) and height of flare stack (or stacks) and knock-out drum size(s).

Provide the size of the condensate return system including pump, hydrocarbon knockout drum, etc.

Provide sizes of ground flares, if any.

6.2 Flue Gas Treatment (if any). ***(see section 8.10.4)***

Provide description and capacity of the unit. If it is a licensed unit, provide the name of licensor.

6.3 Waste Disposal. ***(see section 8.0)***

Provide description of waste disposal in terms of solids, liquid and gaseous streams.

If coal is used as fuel, describe treatment and disposition of ash.

6.4 Storage, Blending and Transfer ***(see section 8.10)***

6.4.1 Provide storage capacities of all feeds into the refinery. Major feeds to the refinery are crude oils from various sources. In addition, the refinery may have feeds in terms of treating chemicals, catalysts, corrosion inhibitors, inert gases, methanol, MTBE, fuel oil, fuel gas, solvents, etc.

6.4.2 Provide storage capacities of all products, including all intermediate storage. Products from an integrated refinery may include: LPG, gasolines, kerosene, jet fuel, diesel fuel, aromatics, lube oils, fuel oils, etc.

6.4.3 Besides capacities, provide the type of storage vessels and tanks. For example, LPG storage could be in bullets, spheres, or atmospheric (refrigerated) tanks; gasoline could be in fixed or floating roof tanks.

6.4.4 Provide the description and capacities of various blending units, i.e., gasoline, fuel oil, etc.

509

pipe ne, truc<, or rai .

400

6.5 Fire Protection Equipment

Provide details of fire protection equipment

For example, the number of fire trucks, monitor stations, existence and availability of foam, existence and Capacity of Diesel Booster Pumps, source of fire water, etc.

< 10

Provide estimated variable costs of the following: (Note 1)

Electrical Power

Fuel

Raw Water

Treating Chemicals (Boilers, Cooling Water etc.)

Catalysts

Steam

Cooling Water

Additives for Gasolines

Additives for Lube Oils

Crude Oils

Products

Other Chemicals

Etc.

NOTE 1: At least some cost data, in appropriate units, is required in order to conduct any techno-economic evaluation. This information may be coordinated and combined with the Economic Section of this questionnaire.

211

8.1 Process Water

Source _____

_____

Capacity: _____ cubic meters/hr

Chemical Quality - as used:

TEST	UNITS	TEST	UNITS
Dissolved & Solids (TDS)	_____	Oil/Grease	_____
Settled Solids (TSS)	_____	Phenol	_____
Chem. Oxygen Demand (COD)	_____	Ammonia	_____
Biological Oxygen Demand (BOD)	_____	Chromium	_____
Organic Carbon (TOC)	_____	Zinc	_____
pH	_____	Sulfites	_____
Iron(Fe)	_____	Hardness	_____

Pretreatment before use: (Yes or No)

pH Control. _____
Settling. _____
Flocculation/Sedimentation _____
Filtration _____
Other. _____

8.2 Drinking Water.

If drinking water is from a different source other than (8.1) above, complete the same information as requested in test above.

Source _____

_____

Capacity: _____ cubic meters/hour.

Chemical Quality - as used:

TEST	UNITS	TEST	UNITS
Dissolved & Solids (TDS)	_____	Oil/Grease	_____
Settled Solids (TSS)	_____	Phenol	_____
Chem. Oxygen Demand (COD)	_____	Ammonia	_____
Biological Oxygen Demand (BOD)	_____	Chromium	_____
Organic Carbon (TOC)	_____	Zinc	_____
pH	_____	Sulfites	_____
Iron (Fe)	_____	Hardness	_____

512

pH Control. _____
Settling. _____
Flocculation/Sedimentation _____
Filtration _____
Other. _____

8.3 Cooling Tower Water.

Source of Water _____
If same as (8.1) or (8.2) above:

Once through. _____
Cooling tower loop. _____

Additional pretreatment other than provided in *8.0) or (8.2) above. Define. _____

Recycle water treatment:
Corrosion control. _____
Biocides. _____
Total Dissolved Solids of recycle/blowdown _____

Recycle rate _____ cubic meters/hr

Make-up rate _____ cubic meters/hr

Blowdown rate _____ cubic meters/hr

Blowdown discharge to: _____

8.4 Boiler Feed Water.

Source: _____

_____

Boiler Feed Water Treatment:

Softening: Resin _____ Lime _____
Reverse Osmosis _____
Ion Exchange _____
Waste Heat Distillation _____

513

H_2SO_4 _____
HCl _____
NaOH _____
Na_2SO_3 _____
H_2NNH_2 _____
Phosphates _____
Other _____

Ion Exchange Regenerant Discharge:
_____ cubic meters _____ cycles/day.

Discharge to: _____

Boiler Blowdown discharge rate: _____ cubic meters/min.

Discharge to: _____

8.5.1 Tankage Areas:

Are tank areas diked to prevent the spread of oil leaks?
Yes _____ No. _____

Capacity of the diked area verses the capacity of largest tank?
1:1 1:1.1 1:1.25 other _____

Inside of dike: earth: concrete: plastic liner.

Method of removing the trapped oil/water? _____

_____

Is oil skimming provided? Yes _____ No. _____

8.5.2 Process Block Area.

Is the block area curbed to prevent rain water run?
Yes _____ No ____

Is there a separate sewer system for the rain water falling on the process block area? _____

Are the following leaks/drains controlled to allow recovery of oil?

Pump seals:	Yes _____	No. _____
Valve stems:	Yes _____	No. _____
Flanges:	Yes _____	No. _____
Sample line drain:	Yes _____	No. _____
Tank Overflow lines:	Yes _____	No. _____
Pump casing drains:	Yes _____	No. _____
Control valve drains:	Yes _____	No. _____
Heat exchangers:	Yes _____	No. _____

8.5.3 Roadways, Parking Lots & Roof Drains.

Are these rain water flows separated from (8.5.1 and 8.5.2) above?
Yes _____ No. _____

If no, are there any plans to separate the storm water flow?
Yes _____ No. _____

515

Area and the roadway/road drain.

No treatment. _____

Flow from (8.5.1, 8.5.2 and 8.5.3) above treated? (circle which).

Treatment:

Lagoon with oil skimming. _____
Chemical/biological treatment. _____
Stored for Plant water supply. _____
Other - describe on separate page.

Chemical quality of outlet water.

Suspended Solids _____
Dissolved Solids _____
Fats/Oils/Grease _____
Biological Oxygen Demand _____
Chemical Oxygen Demand _____
pH _____
Discharged to _____
(river, lake, sea)

8.6. ON-SITE WATER SYSTEM

8.6.1 Attach a site plot plan showing the location and routing of the following:

Roof drain sewers
Roadway and Parking lot sewers.
Open area rainwater catch basins and sewers.
Storage tank area drains and sewers.
BS&W drain/sewers.
Process water drain/oily sewers.
Process area stormwater sewers.
Sour water piping and sewers.
Wastewater treatment units, Process and Sanitary.
Solid waste storage/disposal sites.
Water supply and water treatment.
Barometric condenser drains.

systems on any of the above sewers or combinations of sewers.

Show

Pump stations.
Flow balancing basins.
Flow regulating devices.
Chemical additions.
Oil skimming.
Settled solids removal.
Air/steam stripping.
Aeration area for chemical oxidation.
Biological treatment system.
Effluent balancing
Points of water discharge to off-site.
Locations of flow measurements and sampling.

Flow rates.
Chemical quality. (8.1)

Any current or planned water recycle system.

117

8.7.1 For each major water treatment unit show on the block flow diagrams (8.6.2) give the critical data:

Volume. _____

_____

Length, width & liquid depth. _____

_____

Pump rates. _____

_____

Water quality in/out (I-A-3) _____

_____

Chemical added. _____

_____

Method of sludge disposal _____

_____

a. Quantity _____ cubic meters
b. Frequency _____

Method of skimmed oil disposal _____

_____

Design flow rates. _____

_____

Energy consumed at each unit. _____

_____

8.7.2 Provide process flow diagrams showing the typical Chemical Engineering parameters. (If available).

8.8 NOISE LEVEL

8.8.1 During the Characterization, Evaluation and the Environmental visits, those areas observed with excessive noise levels will be noted. No field measurements are to be made at this time. If a simplified and economical method of a control is evident to the Team, this will be noted and defined. If the excessive noise is due to a complex of sources, this will be noted for potential future study.

8.9.1 Crude tankage silt.

Quantity and frequency of removal. _____

_____

Method of disposal.

_____

_____

8.9.2 Atmospheric./Vacuum still bottoms.

How used? _____

_____

How disposed? _____

_____

8.9.3 FCC fines/spent catalyst.

How collected? _____

_____

How disposed? _____

_____

Quantity? _____

_____

8.9.4 Spent caustic.

Quantity? _____

_____

How disposed? _____

_____

8.9.5 Water treatment sludge.

Quantity? _____

_____

How disposed? _____

_____

Quantity of oil and how disposed? _____

_____

Quantity of sludge and how disposed? _____

_____

8.9.7 Wastewater treatment sludge.

Quantity? _____

_____

How disposed? _____

_____

8.9.8 Boiler System.

Fly ash quantity and how disposed? _____

_____

Bottom ash quantity and how disposed? _____

_____

8.9.9 Spill Clean-up

How are spilled liquids handled? _____

_____

How are contaminated soils handled?

_____

_____

8.10.1. Benzene and other aromatics.

Benzene has been defined in various countries as a carcinogenic substance. If the Evaluation Team suspects the presence of Benzene, those areas suspect shall be noted.

8.10.2 Storage tanks: Complete a form for each tank larger than 400 metric tons volume.

8.10.2.1. Crude: (Vapor pressure) _____ mm

Covered _____ Uncovered _____
Capacity _____ metric tonnes

Diameter _____meters
Height _____meters

Number _____
Vent control:

None. _____
Conservation valve. _____
Carbon adsorption. _____
Flare system. _____

Estimated vapor loss _____ metric tonnes/year

8.10.2.2 Light ends: (Vapor pressure) _____ mm

Covered _____ Uncovered _____
Capacity _____ metric tonnes

Diameter _____meters
Height _____meters

Number _____
Vent control:

Conservation valve. _____
Carbon adsorption. _____
Flare system. _____
Other _____ Define _____

Estimated vapor loss _____ metric tonnes/year

521

Covered _____ Uncovered _____
Capacity _____ metric tonnes

Diameter _____meters
Height _____meters
Number _____

Vent control:

Conservation valve. _____
Carbon adsorption. _____
Flare system. _____
Other _____ Define _____

Estimated vapor loss _____ metric tonnes/year

Resid: (Vapor Pressure) _____ mm

Covered _____ Uncovered _____
Capacity _____ metric tonnes

Diameter _____meters
Height _____meters
Number _____

Vent control:

Conservation valve. _____
Carbon adsorption. _____
Flare system. _____
Other _____ Define _____
Estimated vapor loss _____ metric tonnes/year

8.10.3 Fired heaters (complete for each process heater & boiler):

Identification. _____

Fuel. _____

Fuel composition - attach a copy.

J/gm _____HHV
Sulfur content. _____%
Ash content _____%
Moisture content. _____%

2

Air pollution control: device for control of:

Particulate:
Type _____
Efficiency _____ %

Sulfur:
Type _____
Efficiency _____ %

NOx

Type _____
Efficiency _____ %

CO:
Type _____
Efficiency _____ %

8.10.4. Sulfur Balance

Sulfur Input

Typical annual crude throughput	_____ tonnes/year
Typical sulfur content	_____%
Total sulfur input	_____ tonnes/year

Sulfur Distribution - annual basis:

Shipped in product	_____ tonnes
Process heater stacks	_____ tonnes
Power plant stacks	_____ tonnes
To sulfur Recovery*	_____ tonnes
Recovered and shipped as S	_____ tonnes
Sulfur Recovery System Stack Discharge	_____ tonnes
In Sourwater to Wastewater Treatment Unit	_____ tonnes
TOTAL	_____tonnes

*** Sulfur Recovery System Type** _____

_____

523

If a sulfur tail-gas clean-up is not installed, is one being considered? _____ Yes _____ No

If yes, which system.? _____

_____

8.10.4.4 Power Plant Stacks

If high sulfur fuel is currently being fired at the power plant -

Is the fuel high sulfur refinery product? ____ Yes ____ No

If yes, are you currently planning

to install fuel desulfurization?
____ Yes _____ No Date _____

to install flue gas desulfurization?
____ Yes _____ No Date _____

change fuels? _____ Yes _____ No
fuel _____ gas _____ Coal _____

Fuel Quality - attach a copy of the ultimate analysis. This response may be coordinated with the Technical portion of the Questionnaire.

Is the fuel a high sulfur coal or peat?
_____ Yes _____ No

If yes, are you currently planning

to install fuel desulfuration?
____ Yes _____ No Date _____

to install flue gas desulfuration?
____ Yes _____ No Date _____

change fuels? _____ Yes _____ No
fuel _____ gas _____ Coal _____

with the Technical portion of the questionnaire.

8.10.5 Other Potential Environmental Releases.

8.10.5.1 Chemicals added or used in refining:

Is TEL (Tetruethyl Lead) added? _____ Yes _____ No

Briefly describe how the TEL is received, stored, mixed and blended to the products. Attach a Block Flow Diagram.

Estimate use per year _____ Tonnes.

Acids (HF, HCl, H_2SO_4):

Are acids used in the process? _____ Yes _____ No

Briefly describe how the acids are received, stored, mixed and used in the process. _____

_____

How is the spent (used) acid disposed? _____

_____

Attach a Block Flow Diagram for each acid used.

Are solvents used in the process of refining?
_____ Yes ____ No

What solvent and process? _____

_____

Briefly describe how the solvents are received, stored, mixed, used, reclaimed or disposed?_____

_____

Attach a Block Flow Diagram for each solvent used.

8.10.5.2 Asphalt

Is asphalt a product of this refinery? _____ Yes _____ No
Blown? _____ Yes _____ No

525

_____

_____

8.10.5.3 Heavy Metals (Cu, V, Fe, Co, Ni)

Metals are found in crude oil. Some heavy metals are used as a catalysis.

Crude Heavy Metals Balance.
Metals in Crude _____ Tonnes/year
Metals in Product _____ Tonnes/year
How is the difference in Tonnes/year disposed of?

_____

Catalyist (Metal)

In new catalyist _____ Tonnes/year
Recycled to supplier _____ Tonnes/year
Disposal on-site _____ Tonnes/year

Describe how the metals are prevented from becoming air borne or flow to the surface or groundwater.

_____

_____

8.10.5.4 Halogenated Hydrocarbons

Are hydrocarbons halogenated in the process?
_____ Yes ____ No

How are they prevented from being released into the environment?

_____

_____

8.10.6 Process losses.

8.10.6.1 Define the Process Flows to the flares. _____

_____

8.10.6.2 Define the type of flare. (uncontrolled, steam) _____

_____

8.10.6.3 Flare burning control (Automatic, on/off) _____

_____

-C26'

determine excessive hydrocarbon loss?

_____ _____

_____

8.10.6.5 Define other hydrocarbon vent losses not routed to carbon absorber or the flare.

_____

_____

8.10.6.6 Estimate the number of each of the following:

All process streams:

That end at pipe valves without blind flanges attached. _____

_____

Process drains. _____

_____

Gas streams:

That end at pipe valves without blind flanges attached.

_____

_____

Process drains. _____

_____

Light liquid & gas/liquid:

That end at pipe valves without blind flanges attached.

_____

_____

Process drains. _____

_____

That end at pipe valves without blind flanges attached.

_____

_____

Process drains. _____

_____

Hydrogen stream:

That end at pipe valves without blind flanges attached.

_____

_____

Process drains. _____

_____

8.10.7 Fuel Costs at the refinery, if not provided elsewhere:

Fuel gas: _____
Natural gas: _____
LNG: _____
LPG: _____
Brown coal: _____
Soft coal: _____

8.10.8 Solid fuels:

Attach a copy of a "typical" ultimate fuel analysis.

c28

JOHN BROWN

Economic and Environmental Questionnaire
for
Characterization Report

National Level Issues
&
Refinery Input

USAID NIS Petroleum Refinery Program -
Kazakhstan & Ukraine

- 29

JOHN BROWN
USAID NIS REFINERY PROGRAM
QUESTIONNAIRE
ECONOMIC AND FINANCIAL EVALUATION

I. Economic and Energy Trends

1.1 Economic Trends

a) What are the chief characteristics of the economy that are relevant for energy growth, particularly the oil sector (e.g., energy intensive industries, lack of oil/gas reserves, low per capita energy consumption, etc.)?

b) How has independence affected the economy?

c) Annual real Gross Domestic Product growth rates (discounted for inflation) for the past five years; estimate for this year; forecast of the average annual Gross Domestic Product growth rate for the next five years. Brief rationale for expected different trend.

d) Annual rates of inflation and devaluation during the past five years; estimates for this year; forecasts for next five years.

e) Show crude oil and petroleum products and other energy products in the composition of imports or exports and relative importance in foreign exchange flows and the balance of payments.

1.2 Energy Trends

a) For each year during the past five years as well as an estimate for this year and forecast for next five years, show

-- energy demand by source; oil, gas, coal, hydropower, nuclear, wood/other, total, expressed in metric tons (oil equivalent);

-C30

-- energy demand by sector; transportation, residential/commercial, industrial, non-energy, generation & transmission losses, total

b) Identify the chief relevant factors that have influenced the energy pattern in the past and how will these and new influences affect the future energy pattern and trend.

c) What have been the main factors responsible for the level and trend in the ration of Gross Domestic Product to energy consumption?

1.3 Petroleum Trends

a) For each year during the past five years as well as an estimate for this year and forecast for the next five years, show

-- oil product demand; LPG, premium gasoline, regular gasoline, Naphtha Feedstock, kerosene, Jet Fuel, Aviation Gasoline, Diesel, Heating Oil, residual fuel oil, asphalt, lubricants, other oil products (specify)

-- production: crude oil, natural gas, natural gas condensates, coal, nuclear electricity, shale oil, alcohol for energy use, other energy (specify)

-- refinery production: breakdown as oil product demand above plus butane, petroleum coke, sulphur

-- imports/exports: detailed breakdown as above for different energy forms, including types of crude oil, and petroleum products.

b) What have been the main factors responsible for the trends in energy and oil product demand, supply, exports, and imports? How are these trends and underlying factors expected to change?

II. Energy Policy

2.1 Energy Control Agencies

Give details of the agencies that exercise control over the operations, planning, trade, transportation, production, financing, pricing, and other activities of the petroleum sector. What has changed since independence?

2.2 Energy Policies

What are the government's main energy policies as regards:

* oil imports/exports;
* exploration activity;
* consequences of Chernobyl nuclear disaster (for the Ukraine);
* favoring development/consumption of energy over another;
* subsidization of certain activities or oil consumers;
* matching crude slate or refinery output to demand;
* regulating transportation or investments in energy;
* developing electricity from alternative energies;
* introducing or improving environmental regulations
* providing tax incentives for energy savings projects
* other issues affecting the refinery industry

2.3 Hydrocarbon Legislation

Summarize briefly and highlight the main aspect of legislation affecting petroleum sector. What changes are programmed or planned for the near future?

532

2.4 Pricing Policy

Show a detailed current price build-up in local currency per metric ton and per liter, roughly as follows:

* average crude oil price FOB or at wellhead;
* any taxes or margins or price differentials added;
* actual cost of freight and insurance to the refinery;
* any taxes or margins or commissions added;
* actual delivered crude oil price charged refinery;
* energy costs and losses in refining;
* refinery operating, financing and other costs
* refinery margin;
* taxes paid by the refinery;
* average product price charged by the refinery;
* transportation/insurance from refinery to retailers and large consumers;
* sales and other taxes on oil products;
* margins, commissions to marketers, dealers, retailers;
* average product price paid by non-subsidized consumers.

Describe the mechanisms and calculations for establishing the prices of

* crude oil imported
* crude oil purchased by the refineries
* products leaving the refineries (ex-refinery prices)
* products sold wholesale
* products sold retail

A similar price break-down from the refinery to the consumer as above is needed for individual oil products.

2.5 Operational Planning and Control

Give details of the planning and decision making process for determining crude oil sources and slates at individual refineries, investments and production and sales of petroleum. Who determines crude runs and product slates and how often are they reviewed and revised? Describe refinery cost accounting practices and capital budgeting and decisions.

Develop a break-down for each refinery, showing the volumes and delivery cost of crude inputs and the product slate output and revenues collected for each product output by the refinery.

2.6 Import/Export Policy

Give details of the controls, restrictions, and pricing of imports and/or exports of crude oil and products.

Indicate the sources of crude oil imports, quality, quantities, prices, tariffs and other surcharges. Similar detail for product imports and crude and product exports.

Comparison of ex-refinery product prices with Cost, Insurance, Freight (CIF) prices of comparable imported products. What are the factors accounting for price differences imported and locally refined products.

2.7 Financial Policies

What is the source and disposition of:

> profits or losses from refinery operations importing or exporting transportation marketing or retailing?

What are the sources and cost of investment capital for refineries?

534

III. Composition and Structure of the Petroleum Sector

Describe the relative importance, size, investments, sales, or revenues, and ownership of the different functions or composition of the petroleum sector:

* Exploration and Production;
* Refining;
* Transportation/Pipelines;
* Import/Export Terminals;
* Bulk Plants/Blending Plants;
* Marketing/Retailing.

How do these components interact in moving, dispatching, receiving the product and in making payments and collecting tax revenues or disbursing subsidies?

What reforms of this system have been implemented since independence and further changes are being programmed or planned?

How will the private sector, including foreign investors, be permitted to enter the petroleum sector? Will some areas be restricted to private or to foreign participation? Have decisions been made in the Legislature and laws or decrees passed or being discussed?

IV. Duties, Taxes, and Subsidies

Show the rates and application of current import duties and other surcharges on imported crude oil and products; royalties, taxes, and other levies on crude oil production; taxes and surcharges paid by the refineries or charged to or paid by the marketing companies and retailers.

If not done earlier in this questionnaire, the tax components in the price build-ups from refinery or import terminal to the consumer for individual products in local currency per metric ton should be shown.

Similarly, show the incidence of subsidies within the price structure of individual products as well as the sources of financing these subsidies, for example, cross compensation by taxes on other products.

Describe the underlying reasons for the establishment of special taxes or subsidies targeted for specific uses or consumers.

The tax and subsidy structure in other energy areas (gas, coal, hydro, nuclear) should also be highlighted and described, particularly as it affects the price, demand, supply, or competitiveness of petroleum products or the policies toward refining.

V. Operational Economics - Refineries

5.1 Input

Provide annual or average quantities, sources, prices, and values of raw materials purchased by each refinery and for the country as a whole:

* crude oil;
* reconstituted distillates and other feedstocks;
* catalysts and chemicals;
* other materials.

What are some major problems with these supplies for the refineries?

Has the refinery supply situation changed in some respect since independence? Have supply prices changed significantly causing changes in supply sources?

536

5.2 Operating Costs

Provide details about refinery costs:

* Manpower
    - Number
    - Salaries
    - Fringe benefit costs;
* Purchased Fuels (oil, gas, coal);
* Purchased Utilities (power, water, steam, other);
* Insurance;
* Maintenance;
* Transportation and Refinery Distribution Costs;
* Local Taxes.

5.3 Financial Charges

Provide details of the indebtedness of each refinery and its annual financial burden

* Interest and Amortization;
* Depreciation;
* Income taxes;
* Special disbursements.
    - Net gains or losses at each refinery

5.4 Output and Revenue

Provide quantity, destination, price, and value of the individual products sold at each refinery, by year for last five years.

What major problems have been encountered in connection with refinery product sales and what changes are being contemplated?

Describe and provide details of product exports by any refineries. At what prices are products exported, to where, how?

What quantities, at what price and value are specific feedstocks transferred for chemical production?

Show a comparison of the annual total revenue stream with total costs at each refinery.

8

ENVIRONMENTAL POLICY ISSUES
CHARACTERIZATION SURVEY

I. The purpose of completing this Evaluation Survey is to define the level of National Policy for the protection and clean-up of the environment.

II. National Policy

A. Is there National Policy Legislation, which states that the discharge of pollutants shell be limited, when standards are to be established, how the discharges of pollutants are to be monitored and how corrections are to be made when the discharges exceed the standards?

B. Status as of June 1993

1. Legislation - is a specific law for the control of:

Pollutant	Yes	No	Proposed (Yes/No)	Actual or expected approval date
Air Emissions	___	___	___	_____
Water Discharge	___	___	___	_____
Solid Waste Disposal	___	___	___	_____
Ground Water	___	___	___	_____

2. Regulations/Standards - Allowable levels of pollution:

Pollutant	Yes	No	Proposed (Yes/No)	Actual or expected approval date
Air Emissions	___	___	___	_____
Water Discharge	___	___	___	_____
Solid Waste Disposal	___	___	___	_____
Ground Water	___	___	___	_____

3. Printed Data

If standards for allowable pollutant discharge or emissions have been developed, please attach a copy of the tables showing the allowable levels of discharge or emissions.

III. Responsibilities

A. Is the authority and responsibility to control the pollutant discharges (air, water, solid waste and ground water) assigned to just one administrative government unit? _____ Yes _____ No

If yes:

Name: _____
Address: _____
_____
_____
Telephone No. _____
Fax No. _____

If no, who is responsible for:

Air pollutants:

Name: _____
Address: _____
_____
_____
Telephone No. _____
Fax No. _____

Waste pollutants:

Name: _____
Address: _____
_____
_____
Telephone No. _____
Fax No. _____

Solid Waste:

Name: _____
Address: _____
_____
_____
Telephone No. _____
Fax No. _____

Ground Water: Name: _____
Address: _____
_____
_____
Telephone No. _____
Fax No. _____

B. Is your government a part of a multi-national agreement, pact or an association for environmental control?
_____ Yes _____ No

Name other countries: _____
_____
_____
_____

IV. Existing Environmental Conditions

Does any government agencies have in progress or completed a technical evaluation of the current status of the air, water, solid waste, or ground water contamination problem?
_____ Yes _____ No

If yes, is a summary of the report(s) available for use?
_____ Yes _____ No

Attach a copy of the "Summary" if available.

V. Petroleum Refining

It may be likely that if there are environmental changes required, then the clean-up may require many types of activities, many areas of work and the establishment of priorities.

If this is the case, please rank the following in the order which you and local population consider the most important to the least important. (Number 1, the highest and number 4 the lowest priority):

Pollution Controls Needs	Rank			
Air Emission	1	2	3	4
Water Emissions	1	2	3	4
Solid Waste Disposal	1	2	3	4
Ground Water	1	2	3	4

541

JOHN BROWN

Характеристика нефтеперерабатывающего предприятия

Вопросник

742

ПЕРЕЧЕНЬ ТАБЛИЦ И ФИГУР

Таблица		Стр
3-1	Характеристики сырой нефти	6
3-2	Сжиженный нефтяной газ	8
3-3	Бензин	9
3-4	Топливо для реактивных двигателей	10
3-5	Дизельное топливо	11
3-6	Нефтетопливо	12
5-1	Система пара	14
5-2	Химическая подготовка воды	15
5-3	Системы водоснабжения	17
5-4	Химический анализ воды	18
5-5	Данные топливного газа	20
5-6	Электрические мощности	21

ПРИЛОЖЕНИЕ

2.1 Типовая технологическая блок-схема (Простой НПЗ)

2.2 Типовая технологическая блок-схема (Комплексный НПЗ)

543

СОДЕРЖАНИЕ

	Стр.
1. Общая часть	1
2. Структура нефтеперегонного завода (Включая материальный баланс)	4
3. Характеристики и параметры сырья и нефтепродуктов	5
4. Технологические блоки предприятия	13
5. Данные систем энерго-, тепло- и водоснабжения	13
6. Блоки, вынесенные за пределы предприятия	23
7. Данные о производственных расходах	25
8. Окружающая среда	26

JOHN BROWN

1. ОБЩАЯ ЧАСТЬ

1.1 НАЗВАНИЕ ПРЕДПРИЯТИЯ И МЕСТОПОЛОЖЕНИЕ

Название _____

Местоположение _____

_____

_____

1.2 ПЕРЕПИСКА

Переписка, связанная с настоящей работой, должна направляться в соответствии с нижеследующим:

Нефтеперегонному Предприятию:

Название предприятия _____

Адрес _____

_____

_____

Вниманию _____

Телефон № _____ Телекс № _____

Добавочный _____ Телетайп № _____

Факсимиле № _____

Модель и изготовитель Ф.А. _____

Фирме JOHN BROWN:

Название предприятия John Brown E & C

Адрес 300 S. Riverside Plaza

Suite 1800

Chicago, Illinois 60606 , USA

Вниманию _____

Телефон № (312) 669-7000 Телекс № 190146

Факсимиле № (312) 902-1236

Модель и изготовитель Ф.А. _____

(Работает круглые сутки)

1.3 МАСШТАБ ПРЕДПРИЯТИЯ

Кратко опишите общие данные предприятия, включая инфраструктуру: историческая справка о предприятии, дата первоначального строительства, типы установленных технологических блоков (топливо, смазочные; полностью ли комплексированы в нефтехимический цикл и т.д.), также укажите даты основных модернизаций, местоположение, количество работающих.

1.4 ЕДИНИЦЫ ИЗМЕРЕНИЯ

Среди указанных ниже выберите единицы измерения, используемые на НПЗ. (Обведите кружком каждую из единиц).

	Англ. ед.	МКС	СИ
Температура	°F	°C	°C
Давление	*psi*	*kG/cm²*	*kPa*
Масса	*lb (Англ. фунт)*	*kg*	*kg*
Длина	*ft - in*	*m,mm*	*m,mm*
Относительная плотность	*Уд. вес при t[°F] / Уд. вес воды при 60°F*	*Уд. вес при t[°C] / Уд. вес воды при 15°C*	*Уд. вес при t[°C] / Уд. вес воды при 15°C*
Абсолютная плотность	*°API* или *lb/gal при 60°F*	*kg/m³ при 15°C*	*kg/m³ при 15°C*
Удельный вес в потоке	*lb/ft³*	*kg/m³*	*kg/m³*
Измерения потока			
Масса	*lb/hr*	*kg/час*	*kg/час*
Паровая фаза	*ft³/sec*	*m³/час*	*m³/час*
Жидкость	*U.S. галон/час*	*m³/час*	*m³/час*
Стандартные величины			
Паровая фаза	*10⁶ Станд. ft³/день при 60°C*	*Норм. m³/час при 0°C*	*Станд. m³/час при 15°C*
Жидкость	*баррелей/день при 60°C*	*Станд.m³/час при 15°C*	*m³/час при 15°C*
Энтальпия	*Btu/lb*	*kcal/kg*	*kJ/kg*
Тепловая мощность	*10⁶Btu/Hr*	*10⁶kcal/Hr*	*MW*

Предполагается, что все данные буду выдаваться НПЗ в тех единицах, которые НПЗ отметит в данной таблице. Если же отдельные цифры будут выданы в других единицах, НПЗ должен каждый раз давать соответствующую оговорку.

2.0 СТРУКТУРА НЕФТЕПЕРЕГОННОГО ЗАВОДА

2.1 ТЕХНОЛОГИЧЕСКАЯ БЛОК-СХЕМА ЗАВОДА

Приложите к вопроснику технологическую блок-схему Завода, она должна быть вычерчена по образцу, показанному на Фиг. 2.1 и 2.2.

На Фиг. 2.1 показана типовая блок-схема очень простого НПЗ; исключения - Блок отгонки легких фракций (отбензинивание) и НПЗ смазочных масел.

На Фиг. 2.2 показана типовая блок-схема комплексного, или полностью интегрированного, НПЗ. Она приведена только для информации, так как на практике только очень немногие НПЗ имеют так много технологических блоков.

2.2 ОБЩИЙ МАТЕРИАЛЬНЫЙ БАЛАНС

Производительность переработки сырой нефти:
Ввозимые компоненты смешения:

Продукты

Сжиженный нефтяной газ (СНГ):
Стандартный бензин:
Бензин высшего качества:
Растворители:
Сырье для ароматического комплекса:
Сырье для нефтехимического комплекса:
Авиационные топлива:
Дизельные топлива:
Нефтетоплива:
Смазочные масла:
Консистентные смазки:
Асфальты:
Промышленные топлива:
Кокс:
Сера
Проч.:

2.2.1 Укажите названия и среднемесячное потребление различных химикалиев (для обработки, для технологических процессов, ингибиторов коррозии и т.п.). Включите также добавки и присадки, такие как *MTBE, TEL* и т.п., а также для смазочных масел.

8

3.0 ХАРАКТЕРИСТИКИ И ПАРАМЕТРЫ СЫРЬЯ И НЕФТЕПРОДУКТОВ

3.1 СЫРЬЕ

3.1.1 Заполните Таблицу 3-1 характеристиками каждого в отдельности вида сырой нефти, поступающей на НПЗ.

Помимо данных, введенных в Таблицу 3-1, для проведения анализа работы блока атмосферной перегонки, необходимо следующее:

1. Кривая истинной температуры кипения совместно с графиками удельного веса, вязкости и содержания серы.

2. Анализ легких крайних фракций до и включая все гексаны.

3. Характеристический фактор (UOP или k Ватсона) для всей сырой нефти.
4. Для вакуумной установки (если имеется) укажите вакуумную перегонку (D-1160) для остатков.

ТАБЛИЦА 3-1. ХАРАКТЕРИСТИКИ СЫРОЙ НЕФТИ

Название нефти **Месторождение**				
Контрольный анализ нефти Вес, в °API или Уд. вес при 20°C Сера, % (вес) Температура потери текучести Вязкость, в *сантистокс* при 20°C Углерод по Конрадсону % (вес) Асфальтены и смолы, % (объем) Металлы, Ni+Va, *частей/миллион*				
Бензин, C_1 - 405 °F (C_5 - 207° C)* Выход, % (объем) Сера, % (вес) Октановое число, F-1, 3 *мл ТЭС* Уд. вес при 15°C				
Легкий газойль, 405 - 650 °F (207° - 344 C)* Выход, % (объем) Вес, °API или Уд. вес при 20°C Сера, % (вес) Температура потери текучести Характеристический фактор				
Тяжелый газойль, 650 - 1000 °F (344 - 538 °C)* Выход, % (объем) Вес, °API или Уд. вес при 20°C Сера, % (вес) Вязкость, в *сантистокс* при 50°C Парафины, % (вес) Характеристический фактор				
Остаток, 1000 °F (538 °C)* и выше Выход, % (объем) Вес, °API или Уд. вес при 20°C Сера, % (вес) Вязкость, в *сантистокс* при 50°C				
Индекс вязкости депарафинизированного смазочного масла				

* Температурные диапазоны выходных фракций указаны только для примера. НПЗ может указывать температурные диапазоны, которые наиболее характерны для выпускаемых НПЗ продуктов.

3.1.2 Характеристики других видов сырья (кроме сырой нефти), таких, например, как возврат, промежуточное сырье из других источников, остатки и т.п.
Пожалуйста перечислите, указав все существенные параметры.

3.2 ХАРАКТЕРИСТИКИ НЕФТЕПРОДУКТОВ

Пожалуйста, заполните нижеследующие таблицы.

ТАБЛИЦА 3-2. СЖИЖЕННЫЙ НЕФТЯНОЙ ГАЗ (СНГ)

Состав	ПРОПАН	БУТАН	СНГ
Давление паров при 38° С			
Летучий остаток			
Бутан и тяжелее, жидкий объем, %(макс.)			
Пентан и тяжелее, жидкий объем, %(макс.)			
Остаток, масса			
Коррозия, медная полоска, макс.			
Полная сера, *част./миллион (вес)*			
Содержиние влаги			
Содержание свободной воды			
Разливается по баллонам?	Да/Нет	Да/Нет	Да/Нет

ТАБЛИЦА 3-3 БЕНЗИН

Тип		
Удельный вес при 20 °C		
Октановые числа Дорожн. О.Ч. Моторн. О.Ч.		
Перегонка, объем 10% 50% 90% Кон. точка		
Остаток перегонки, %(вес)		
Упругость паров по Рейду		
Сера, %(вес)		
MTBE, %(объем)		
TEL (если содержится)		

33

ТАБЛИЦА 3-4 ТОПЛИВО ДЛЯ РЕАКТИВНЫХ ДВИГАТЕЛЕЙ

Тип		
Удельный вес при 20 °C		
Перегонка, объем Нач. точка кипения 10% 50% 90% Кон. точка		
Остаток перегонки, %(вес)		
Вязкость, в *сантистокс* при 20°C		
Анилиновая точка, °*C*		
Точка замерзания, °*C*		
Температура вспышки, °*C*		
Сера, %(вес)		
Меркаптан, %(вес)		
Содержание ароматических соединений, %(объем)		
Докторская проба		
Макс. высота некоптящего пламени		
Смолы, *мг/100 мл*		
Результирующая теплота сгорания		

ТАБЛИЦА 3-5 ДИЗЕЛЬНОЕ ТОПЛИВО

Тип		
Удельный вес при 20 °C		
Перегонка, объем		
Нач. точка кипения 10% 50% 90% Кон. точка		
Вязкость, в *сантистокс* при 20°C		
Температура потери текучести		
Температура вспышки, °*C*		
Сера, %(вес)		
Коксовый остаток		
Зола		
Вода и осадок, % (объем)		
Коррозия, медная полоска		
Цетановое число, минимум		

555

ТАБЛИЦА 3-6 НЕФТЕПЛИВО

Тип		
Удельный вес при 20 °C		
Перегонка, объем 10% 90%		
Вязкость, в *сантистокс* при 20°C		
Температура вспышки, °*C*		
Температура потери текучести		
Сера, %(вес)		
Коксовый остаток (в 10 % остатке), %		
Зола, %(вес)		
Коррозия, медная полоска		

3.3 Включите в перечень наименования и характеристики всех други нефтепродуктов НПЗ, например: сера, смзочные масла, пек, гуд рон, консистентные смазки, асфальты, растворители, нефтехими ческие и ароматические полупродукты и т. п.

4. ТЕХНОЛОГИЧЕСКИЕ БЛОКИ НПЗ

5. ДАННЫЕ СИСТЕМ ЭНЕРГО-, ТЕПЛО- И ВОДОСНАБЖЕНИЯ

5.1 ПАР (а так же система Горячего Масла, если имеется)

Укажите данные внутризаводской системы генерирования пара: типы котлов и топлива - газ, жидкое топливо, уголь.

Укажите паропроизводительность котлов и параметры пара.

Опишите систему продувки котла (котлов).

5.1.1 Ситстемы могут быть обозначены либо словами: Пар высокого давления, Пар среднего давления, Пар низкого давления, либо с указанием номинальных давлений, например, 600 *PSIG*, 150 *PSIG* и т.д. или же в метрических единицах.

Под минимальным значением давления или температуры понимается наинизшие давление или температура, которые могут быть ожидаемы в любой точке парового коллектора данного номинального давления на данном участке.

Под нормальным значением давления или температуры понимается такое давление или температура, которые могут быть ожидаемы в любой точке парового коллектора данного номинального давления.

Под максимальным значением давления или температуры понимается наивысшие давление или температура, которые могут быть ожидаемы в любой точке парового коллектора данного номинального давления на данном участке.

Под проектным значением давления или температуры понимаются исходные значения давления и температуры, которые используются при проектировании механического оборудования и системы трубопроводов.

157

ТАБЛИЦА 5-1 СИСТЕМА ПАРА

Обозначение Системы	Давление				Температура			
	Мин	Норм	Макс	Проектн.	Мин	Норм	Макс	Проектн.

5.1.2 Система конденсата

Если имеется более чем одна система конденсата, опишите каждую в отдельности.

Типичная система конденсата может включать в себя барабан, или приемник, расположенный на территории НПЗ.

5.1.3 Система горячего масла

Опишите детали системы горячего масла, если таковая используется на НПЗ.
Укажите характеристики используемого горячего масла.

5.2 ВОДА

5.2.1 Используется ли необработанная вода наземных водоемов для восполнения воды в градирнях - ДА/НЕТ?

5.2.2 Укажите торговые названия химикалиев, используемых при обработке воды для следующих нужд:
1. Питьевая вода,
2. Вода для всех других нужд, исключая питательную воду для котлов и воду для градирни (градирен).

5.2.3 Питательная вода для котлов

Заполните таблицу, следующую ниже, приведя данные о химической обработке воды для парогенераторов, а также об антикоррозионной водоподготовке для системы пара и системы конденсата.

ТАБЛИЦА 5.2 ХИМИЧЕСКАЯ ПОДГОТОВКА ВОДЫ

Обозначение Системы	Метод питания и местонахождение точек подпитки	Химикалии (торговое название)

559

5.2.4 Система (системы) охлаждающей воды

Приведите описание системы охлаждающей воды. Если имеется более чем одна система, опишите каждую в отдельности и укажите технологические блоки, обслуживаемые каждой из систем. Для каждой из систем укажите следующее:

Если это система с однократным использованием воды, укажите источник, из которого она доставляется. Также опишите тип химической подготовки и используемые химикалии.

Если система работает по принципу замкнутого цикла, укажите тип и количество градирен. Укажите торговые названия химикалиев.

Укажите куда сбрасывается продувка градирен.

Укажите производительность насосов охлаждающей воды, а также количество работающих и резервных насосов. Укажите также имеются ли насосы с паровым приводом и их количество и где установлены.

560

5.2.5 Заполните нижеследующую таблицу.

ТАБЛИЦА 5-3 СИСТЕМЫ ВОДОСНАБЖЕНИЯ

НАЗВАНИЕ СИСТЕМЫ	НЕОБРАБОТАНН. ВОДА	ОХЛАЖДАЮЩ. ОДНОКРАТНАЯ ВОДА	ОХЛАЖДАЮЩ. ВОДА В ЗАМКН. ЦИКЛЕ	ОБРАБОТАНН. ПИТАТЕЛЬНАЯ КОТЕЛЬНАЯ ВОДА
ИСТОЧНИК				
ТЕМПЕРАТУРА ИСТОЧНИКА _____°C				
ДАВЛЕНИЕ ИСТОЧНИКА _____ ГРАНИЦА БАТАРЕИ, НА УРОВНЕ ЗЕМЛИ				
ВОЗВРАТНОЕ ДАВЛЕНИЕ _____ ГРАНИЦА БАТАРЕИ, НА УРОВНЕ ЗЕМЛИ				
ТЕМПЕРАТУРА ВОДЫ НА ВХОДЕ ТЕПЛООБМЕННИКА _____°C				
ТЕМПЕРАТУРА ВОДЫ НА ВЫХОДЕ ТЕПЛООБМЕННИКА _____°C				
ПРОЕКТНАЯ ТЕМПЕРАТУРА ТЕПЛО-ОБМЕНН. НА ВОДЯНОЙ СТОРОНЕ_____°C				
ПРОЕКТНОЕ ДАВЛЕНИЕ ТЕПЛО-ОБМЕНН. НА ВОДЯНОЙ СТОРОНЕ_____				
СОПРОТИВЛЯЕМОСТЬ К УХУДШЕНИЮ ТЕПЛООБМЕНА				

ТАБЛИЦА 5-4 ХИМИЧЕСКИЙ АНАЛИЗ ВОДЫ

НАЗВАНИЕ СИСТЕМЫ	НЕОБРАБОТАНН. ВОДА	ОХЛАЖДАЮЩ. ОДНОКРАТНАЯ ВОДА	ОХЛАЖДАЮЩ. ВОДА В ЗАМКН. ЦИКЛЕ	ОБРАБОТАНН. ПИТАТЕЛЬНАЯ КОТЕЛЬНАЯ ВОДА
pH				
ПОЛНАЯ ЖЕСТКОСТЬ ПО $CaCo_3$, *мг/л*				
КАЛЬЦИЙ ПО $CaCo_3$, *мг/л*				
МАГНИЙ ПО $CaCo_3$, *мг/л*				
ПОЛНАЯ ЩЕЛОЧНОСТЬ ПО $CaCo_3$, *мг/л*				
"P" ЩЕЛОЧНОСТЬ ПО $CaCo_3$, *мг/л*				
СУЛЬФАТ ПО SO_4, *мг/л*				
ХЛОРИД ПО Cl, *мг/л*				
КРЕМНИЙ ПО SiO_2, *мг/л*				
ЖЕЛЕЗО ПО Fe, *мг/л*				
РАСТВОРЕННЫЕ ЧАСТИЦЫ ПОЛНОЕ К-ВО, *мг/л*				
ВЗВЕСЬ, *мг/л*				
МУТНОСТЬ, *мг/л*				
ЭЛЕКТРОПРОВОДНОСТЬ, мкМо				

562

5.3 ТОПЛИВНАЯ СИСТЕМА НПЗ

Опишите топливную систему НПЗ. Укажите количество и типы различных типов топлива поставляемых на НПЗ.

5.3.1 Угольное топливо

Если уголь (или несколько разных видов угля) используется в качестве топлива на НПЗ, приведите данные полного анализа и результирующую теплотворную способность (для каждого из видов). Опишите существующую организацию угольного склада, погрузочно-разгрузочные системы, системы внутреннего транспорта и углеподготовки. Укажите является ли уголь ос-основным или же вспомогательным топливом.

5.3.2 Жидкое топливо

Если жидкое топливо (или несколько разных видов жидкого топлива), такое как СНГ, нафта, нефтетопливо и т.п. используются на НПЗ, приведите описание топливной системы (систем). Система может включать в себя принимающие устройства, резервуары, насосные станции и трубопроводный транспорт. Проанализируйте систему, укажите теплотворную способность жидкого топлива (топлив).

5.3.3 Газ

Приведите описание топливной системы на газе, включая хранение, транспорт, распределение и рабочие условия. Проанализируйте систему, укажите теплотворную способность газового топлива (топлив). Заполните таблицу 5-5.

Если запальнй газ не отбирается из НПЗ коллектора топливного газа, а доставляется на НПЗ из других источников, укажите свойства запального газа.

А. Имеется ли паровой подогрев системы снабжения топливного газа? Да_____ Нет?_____

Б. Имеется ли в существующей системе топливного газа жидкостный сепаратор? Да_____ Нет?_____

5.3.4 Укажите количества угля, жидкого топлива и газа фактически использованных для сжигания в течение последних двух лет.

-563'

ТАБЛИЦА 5-5 ДАННЫЕ ТОПЛИВНОГО ГАЗА

СВОЙСТВА	ИСТОЧНИК	
	НПЗ	ДОСТАВЛ. НА НПЗ
Состав (Объем)		
H_2S		
H_2O		
CO		
CO_2		
O_2		
N_2		
H_2		
C_1		
C_2=		
C_2		
C_3=		
C_3		
C_4=		
C_4		
iC_4		
nC_4		
C_5		
iC_5		
nC_5		
C_6+		
C_6		
ИТОГО	100%	100%

564

5.4 ЭЛЕКТРОСНАБЖЕНИЕ

Приведите описание внутризаводской системы генерирования электроэнергии - укажите тип генератора, турбины, возбудителя и регулятора. Если электроэнергия поставляется со стороны, укажите источник.

Приведите общее описание системы электроснабжения, включая понижающую подстанцию и распределительную систему, график сброса нагрузок, коэффициент мощности, систему заземления, надежность (как отношение суммарного времени потери электроснабжения к полному времени) и т.п.
Сообщите данные системы аварийного источника электроэнергии.
Заполните нижеследующую таблицу.

ТАБЛИЦА 5-6 ЭЛЕКТРИЧЕСКИЕ МОЩНОСТИ

Служба	Диапазон мощности		Номинальное напряжение	Фаз	Частота
	От	До			
Моторы					
Измерительные приборы					
Освещение					

565

5.5 ЗАВОДСКОЙ И ПРИБОРНЫЙ ВОЗДУХ

Укажите тип и производительность воздушных компрессоров, холодильников, сушилок. Охарактерихуйте систему резервирования и аварийного снабжения.

Снабжает ли система воздухом, свободным от масла? Да_____ Нет_____
Укажите точку росы для приборного воздуха: _____°C
Укажите давление в коллекторе Макс./Мин.: _____

5.6 ХОЛОДИЛЬНАЯ СИСТЕМА

Укажите назначение, тип и производительность имеющихся холодильных систем.

5.7 СИСТЕМА ИНЕРТНОГО ГАЗА

Укажите источник инертного газа и качество газа.
Если имеется внутризаводской источник инертного газа, опишите используемое оборудование, укажите производительность и т.п.

566

6.0 БЛОКИ, ВЫНЕСЕННЫЕ ЗА ПРЕДЕЛЫ ПРЕДПРИЯТИЯ

Обычно в их число входят следующие:

6.1 ФАКЕЛ И СИСТЕМА ПРОДУВКИ

Укажите размер (выходной диаметр) и высоту трубы факела или факелов и размеры сепараторного барабана (ов).

Укажите данные системы возврата конденсата, включая данные насосов, сепараторных (для удаления углеводородов) барабанов и т.п.

Если имеются, укажите данные наземных факелов.

6.2 ОЧИСТКА ДЫМОВЫХ ГАЗОВ (см. 8.10.4)

Если имеется система очистки дымовых газов, приведите ее описание, указав производительность. Если система лицензирована, укажите фирму-держателя патента.

6.3 УДАЛЕНИЕ ОТХОДОВ (см. 8.0)

Приведите описание систем удаления отходв в отдельности для твердых, жидких и газообразных отходов.

Если используется угольное топливо, опишите систему обработки и золоудаления.

6.4 ХРАНЕНИЕ, СМЕШЕНИЕ, ТРАНСПОРТ

6.4.1 Укажите емкости хранения для каждого в отдельности вида сырья, поступающего на НПЗ. Основной вид сыря - сырая нефть, которя может поступать из различных источников. Кроме того, на НПЗ поставляются такие полупродукты, как специальные химикалии, катализаторы, ингибиторы коррозии, инертные газы, метанол, *MTBE,* нефтетопливо, газ, растворители и т.п.

6.4.2 Укажите емкости хранения для каждого в отдельности вида продуктов, включая все емкости для хранения промежуточных субпродуктов. В число продуктов комплексного НПЗ могут входить такие, например, как ЛНГ, различные сорта бензина, керосин, топливо для реактивных двигателей, дизельное топливо, ароматические соединения, смазочное масло, нефтетопливо и т.п.

6.4.3 Наряду с данными о емкости укажите типы резервуаров и сборников. Так например, для хранения СНГ могут употребляться каплевидные и сферические резервуары а также и атмосферные (охлаждаемые) резервуары; для хранения бензина используют резервуары как с фиксированной крышей, так и с плавающей крышей.

6.4.4 Приведите описание и емкости различных блоков смешения для бензинов, нефтетоплива и т.п.

6.4.5 Укажите виды транспорта для доставки сырья и отправки нефтепродуктов - трубопроводы, автотранспорт (грузовики, автоцистерны) и железнодорожный транспорт.

6.5 ОБОРУДОВАНИЕ ПРОТИВОПОЖАРНОЙ ЗАЩИТЫ

Приведите описание оборудовния противопожарной защиты.

В это описание следует, например, включить указание количества пожарных машин, числа контрольных станций, наличие и производительность пеногашения, наличие дизельных ускорительных насосов, наличие и производительность источников воды для гашения и т.д.

568

7.0 ДАННЫЕ О ПРОИЗВОДСТВЕННЫХ РАСХОДАХ

Приведите оценку компонентов производственных расходов.*

Электроэнергия

Топливо

Вода (не включая подготовку)

Химикалии для подготовки воды (питание котлов, охлаждающая вода и т.п.)

Катализаторы

Пар

Охлаждающая вода

Присадки для бензинов

Присадки для смазочных масел

Сырая нефть (нефти)

Продукты

Другие химикалии

Прочее

* Чтобы провести технико-экономический анализ, необходимо хотя бы часть данных о стоимости выразить в подходящих единицах стоимости. Эта информация может быть координирована и объединена с данными в разделе Экономики настоящего Вопросника

8. ОКРУЖАЮЩАЯ СРЕДА

8.1 ТЕХНОЛОГИЧЕСКАЯ ВОДА

Источник _____

_____

Производительность _____ *л/мин*

Химические данные - как используется:

АНАЛИЗ	ЕДИНИЦ
Растворенные и взвешенные частицы	_____
Осажденные частицы	_____
Хим. потребность воды в кислороде	_____
Биол. потребность воды в кислороде	_____
Органический углерод	_____
pH	_____
Железо	_____
Масло/Жир	_____
Фенол	_____
Аммиак	_____
Хром	_____
Цинк	_____
Сульфиты	_____
Жесткость	_____

Предварительная подготовка (перед использованием)

Контроль pH _____

Отстаивание _____

Флокуляция/выведение в осадок _____

Фильтрация _____

Прочие методы _____

ст0

8.2 ПИТЬЕВАЯ ВОДА

Если вода для питья берется из другого источника, чем названный в 8.1, внесите соответствующие данные в грфы, следующие ниже:

Источник _____

_____

Производительность _____ *л/мин*

Химические данные - как используется:

АНАЛИЗ	ЕДИНИЦ
Растворенные и взвешенные частицы	_____
Осажденные частицы	_____
Хим. потребность воды в кислороде	_____
Биол. потребность воды в кислороде	_____
Органический углерод	_____
pH	_____
Железо	_____
Масло/Жир	_____
Фенол	_____
Аммиак	_____
Хром	_____
Цинк	_____
Сульфиты	_____
Жесткость	_____

Предварительная подготовка (перед использованием)

Контроль pH _____

Отстаивание _____

Флокуляция/выведение в осадок _____

Фильтрация _____

Прочие методы _____

511

8.3 ВОДА ДЛЯ ГРАДИРЕН

Источник воды _____

Если тот же, что и 8.1 или 8.2,

Однократное использование _____
Рециркуляция воды для градирен _____

Проводится ли дополнительная химическая обработка, не упомянутая в 8.1 или 8.2? Опишите.

_____

Обработка рециркуляционной воды:
Контроль коррозии _____
Биоциды _____
Полное к-во растворенных частиц в продувке рециркуляционной воды _____
Рециркуляция, расход _____ *л/мин*
Восполнение, расход _____ *л/мин*
Продувка, расход _____ *л/мин*
Куда сбрасывается продувка? _____

8.4 ПИТАТЕЛЬНАЯ ВОДА ДЛЯ КОТЛОВ

Источник воды _____

_____

Подготовка питательной воды
Умягчение: смола _____ известь _____
Обратный осмос _____
Ионный обмен _____
Дистилляция при помощи отбросного тепла _____

Химикалии для подготовки питательной воды:
H_2SO_4 _____
HCl _____

$NaOH$ _____
Na_2SO_3 _____
H_2NNH_2 _____
Фосфаты _____
Проч. _____

Сброс регенератора ионного обмена _____ *л/цикл* _____ *циклов/день*
Куда сбрасывается? _____

Продувка котла (котлов), расход _____ *л/мин*
Куда сбрасывается? _____

573

8.5 РЕГУЛИРОВАНИЕ ЛИВНЕВЫХ СТОКОВ

8.5.1 Резервуарные парки:

Сооружены ли валы в резервуарных парках с целью предотвращени растекания нефтяных течей?

Да_____ Нет_____

Отношение емкости обвалованной поверхности к емкости самого большого резервуара?

1:1 1:1,1 1:1,25 другое _____

Внутри вала: земля бетон пластиковая подложка.

Метод удаления захваченной нефти/воды _____

_____

Производится ли сбор нефти с поверхностного слоя?

Да_____ Нет_____

8.5.2 Технологический блок

Обнесен ли участок технологического блока бортовым камнем с целью предотвращения растекания дождевой воды?

Да_____ Нет_____

Имеется отдельная система ливневой канализации в пределах технологического блока? _____

Контролируются ли с целью улавливания нефти следующие течи сливные стоки?

Сальники насосов	Да_____	Нет_____
Штоки вентилей	Да_____	Нет_____
Фланцы	Да_____	Нет_____
Стоки линий отбора проб	Да_____	Нет_____
Переливные трубы на емкостях	Да_____	Нет_____
Стоки насосных корпусов	Да_____	Нет_____
Сливные стоки на рег. клапанах	Да_____	Нет_____
Теплообменники	Да_____	Нет_____

-74

8.5.3 Дорожные стоки, стоки стояночных площадок и крыш

Отделена ли ливневая канализация с указанных стоков от стоков, указанных в 8.5.1 и 8.5.2?

Да_____ Нет_____

Если нет, то намечается ли на будущее разделить указанные потоки ливневой воды?

Да_____ Нет_____

8.5.4 Очистка ливневой воды. Укажите в отдельности для 8.5.1; 8.5.2 и 8.5.3

Очистка не производится _____

Обведите кружком участок, сточные воды которого очищаются: 8.5.1; 8.5.2 ; 8.5.3

Метод очистки:

Бассейн + сбор с поверхностного слоя _____
Химико-биологическая очистка _____
Сохраняется как источник заводского водоснабжения ____
_____
Прочее - приведите описание на отдельной странице.

Химические показатели воды после очистки

Взвешенные частицы _____
Растворенные частицы _____
Масло/Жир/Смазки _____
Хим. потребность воды в кислороде _____
Биол. потребность воды в кислороде _____
pH _____
Сбрасывается в_____
(реку, озеро, море)

575

8.6 ВНУТРИЗАВАДСКАЯ КАНАЛИЗАЦИЯ

8.6.1 Приложите план заводской площадки с расположением и соединениями перечисленных ниже систем:
Канализация стоков с крыш;
Канализация стоков с дорог и стояночных площадок;
Сборно-отстойные бассейны дождевой воды с открытых площадей и канализации;
Стоки и канализация резервуарных парков;
Стоки водно-грязевого отстоя и канализация;
Стоки технологической воды, содержащие нефтепродукты;
Ливневая канализация с технологических блоков;
Трубы и канализация для воды с серосодержащими кислотами
Цеха водоочистки - технологической и санитарной
Площадки для хранения и удаления твердых отходов;
Водоснабжение и водоподготовка;
Сливные стоки барометрических конденсаторов.

8.6.2 Приложите технологические блок-схемы любой из систем водоподготовки или водоочистки, используемой совместно с любой из указанных канализационных систем или комбинации систем. На этой схеме следует показать:
Насосные станции;
Расходоуравнивающие бассейны;
Регуляторы расхода;
Введение химических реагентов;
Сбор нефтепродукотв с поверхностного слоя;
Удаление отстоя;
Воздушную/паровую отгонку;
Поверхность аэрации для химического окисления;
Систему биологической очистки;
Балансирование стоков;
Точки выведения стоков за пределы предприятия;
Месторасположение пунктов забора проб и измерений расход
Величины расходов
Химический анализ (см. 8.1)
Любую существующую или намечаемую на будущее систему рециркуляции воды.

- 576

8.7 ВОДООЧИСТКА

8.7.1 Для блоков водоподготовки (или водоочистки), показанных на технологической блок-схеме (III-Б), приведите следующие показатели:

Объем _____

_____

Длина, ширина, глубина _____

_____

Производительность насоса (насосов) _____

_____

Анализ воды входной и выходной _____

_____

Добавляемые химикалии _____

_____

Метод удаления шлама _____

_____

а. Количество _____ $м^3$
б. Как часто _____

Метод удаления нефтепродуктов, собранных с поверхностного слоя _____

_____

Проектные значения расходов _____

_____

Энергия, потребляемая каждым блоком _____

_____

Если имеются, приложите полные технологические схемы, на которых нанесены инженерные данные и параметры процесса.

8.8 УРОВЕНЬ ШУМОВ

8.8.1 Во время посещений НПЗ, посвященных характеристике, оценке и установлению состояния методов защиты окружающей среды, участки с повышенным уровнем шума будут отмечены. Однако специальных измерений шума во время этих посещений выполняться не будет. Если Группа найдет явные и простые методы снижения шума, это будет сформулировано и отмечено. Если же повышенный уровень шума является результатотм сложного взаимодействия многих источников шума, это будет отмечено, как проблема, заслуживающая дальнейшего обследования и изучения.

8

8.9 ТВЕРДЫЕ ОТХОДЫ

8.9.1 Ил в резервурах сырой нефти

Количество, как часто удаляется _____

_____

Метод удаления _____

_____

8.9.2 Остаток Атмосферной/Вакуумной перегонки

Как используется? _____

_____

Как удаляется? _____

_____

8.9.3 Мелочь/отработанный катализатор флюидизированного каталитического крекинга.

Как собирается? _____

_____

Как удаляется? _____

_____

Количество _____

_____

8.9.4 Отработанный каустик

Количество _____

_____

Как удаляется? _____

_____

8.9.5 Ил водоочистки

Количество _____

_____

Как удаляется? _____

_____

579

8.9.6 Сепаратор масло - вода

Количество масла и метод удаления _____

_____

Количество шлама и метод удаления _____

_____

8.9.7 Водоочистной ил

Количество _____

_____

Как удаляется? _____

_____

8.9.8 Котельная система

Количество летучей золы и метод улавливания _____

_____

Количество "колосниковой" золы и метод удаления _____

_____

8.9.9 Сбор пролитых жидкостей

Как собираются пролитые жидкости? _____

_____

Что делается с загрязненной почвой? _____

_____

580

8.10.2.3 Средний дистиллят (давление пара): _____ *мм Hg*

С крышей _____ Без крыши _____
Емкость _____ *т*
Диаметр_____ *м*
Высота _____ *м*
Количество _____
Дыхательный клапан
Консервационный клапан _____
Углеродная адсорбция _____
Система факела _____
Проч. _____ Поясните _____
Потери на испарение (оценочно) _____ *т/год*

8.10.2.4 Остаток (давление пара): _____ *мм Hg*

С крышей _____ Без крыши _____
Емкость _____ *т*
Диаметр_____ *м*
Высота _____ *м*
Количество _____
Дыхательный клапан
Консервационный клапан _____
Углеродная адсорбция _____
Система факела _____
Проч. _____ Поясните _____
Потери на испарение (оценочно) _____ *т/год*

8.10.3 Нагревательные печи (заполните форму для каждой технологической печи и для каждого котла):

Обозначение _____

Топливо _____

Анализ топлива (приложите копию)

Теплотворная способность _____ *дж/г*
Содержание серы _____%
Зольность _____%
Влажность _____%

Скорость сжигания _____ *кг/поток × ч*

8.10 ЗАГРЯЗНЕНИЕ ВОЗДУХА

8.10.1 Бензол и другие ароматические вещества

Во многих странах бензол признан карциногенным веществом. В случае, если Группа Оценки заподозрит наличие бензола на определенных участках, это будет отмечено в отчете.

8.10.2 Резервуары. Для каждого резервуара емкостью 400 *т* и более заполните нижеследующую форму:

8.10.2.1 Сырая нефть (давление пара): _____ *мм Hg*

С крышей _____ Без крыши _____
Емкость _____ *т*
Диаметр_____ *м*
Высота _____ *м*
Количество _____
Дыхательный клапан
Не применяется _____
Консервационный клапан _____
Углеродная адсорбция _____
Система факела _____
Потери на испарение (оценочно) _____ *т/год*

8.10.2.2 Легкие крайние фракции (давление пара): _____ *мм Hg*

С крышей _____ Без крыши _____
Емкость _____ *т*
Диаметр_____ *м*
Высота _____ *м*
Количество _____
Дыхательный клапан
Консервационный клапан _____
Углеродная адсорбция _____
Система факела _____
Проч. _____ Поясните _____
Потери на испарение (оценочно) _____ *т/год*

C82

Контроль выброса в атмосферу. Установлен на _____

Частицы
Тип _____
Эффективность _____%

Сера
Тип _____
Эффективность _____%

Окислы азота (NO_x)
Тип _____
Эффективность _____%

CO
Тип _____
Эффективность _____%

8.10.4 Баланс серы

8.10.4.1 Сера, вход

Типовое количество сырой нефти, пропускаемой через систему за один год _____ *т/год*
Типовое значение содержания серы _____ %
Полное количество серы, вход _____ *т/год*

8.10.4.2 Распределение серы

Выход в виде составной части продуктов _____ *т/год*
Уходит в атмосферу из технологических печей _____ *т/год*
Уходит в атмосферу из котельных топок _____ *т/год*
В систему извлечения серы* _____ *т/год*
Очищенная сера, как выходной продукт _____ *т/год*
Уходит в атмосферу из системы извлечения серы _____ *т/год*
В серосодержащей воде в систему очистки сточных вод _____ *т/год*
ИТОГО _____ *т/год*

* Укажите тип системы извлечения серы _____

_____

583

8.10.4.3 Очистка остаточного отходящего газа

Если серная очистка отходящго газа не производится в настоящее время, намечается ли установка системы очистки отходящего газа в будущем? Да_____ Нет _____

Если да, то какая система намечается? _____

_____

8.10.4.4 Трубы котлов (станция, котельная)

Сжигается ли на станции топливо с высоким содержанием серы

Если да, то является ли это топливо одним из продуктов НПЗ?
Да_____ Нет_____

Если да, то планируется ли
установить систему удаления серы из топлива?
___ Да, в_____году. Срок не установлен ____
установить систему очистки топочных газов?
___ Да, в_____году. Срок не установлен ____
перейти на другие топлива? Да____ Нет_____
жидкое ____ газ _____ уголь _____

Показатели топлива - приложите копию элементарного анализа.

Используемое высокосернистое топливо - уголь (или торф)?
Да_____ Нет_____

Если да, то планируется ли
установить систему удаления серы из топлива?
___ Да, в_____году. Срок не установлен ____
установить систему очистки топочных газов?
___ Да, в_____году. Срок не установлен ____
перейти на другие топлива? Да____ Нет_____
жидкое ____ газ _____ уголь _____

Показатели топлива - приложите копию элементарного анализа.

8.10.5 Другие возможные источники загрязнения

8.10.5.1 Реагенты, добавляемые или же используемые при перегонке:

Добавляется ли *TEL* (тетраэтил свинца)?

Да_____ Нет ____

Приведите краткое описание как тетраэтил принимается на НПЗ, хранится, смешивается и добавляется к нефтопродуктам. Приложите технологическю блок-схему.

Укажите примерный годовй расход тетраэтила свинца:

_____ *т/год*

Кислоты (HF, HCl, H_2SO_4)

Используются ли кислоты в технологическом процессе?

Да_____ Нет ____

Приведите краткое описание как кислоты принимаются на НПЗ, хранятся, смешиваются и используются в технологическом процессе.

Как удаляется отработанная кислота? _____

_____

Приложите технологическю блок-схему для каждой кислоты.

Используются ли растворители в технологическом процессе?

Да_____ Нет ____

Укажите растворители и процессы, в которых они используются.

_____

_____

Приведите краткое описание как растворители принимаются на НПЗ, хранятся, смешиваются и используются в технологическом процессе. Как производится регенерация и удаление растворителей?

_____

_____

Приложите технологическю блок-схему для каждого растворителя.

8.10.5.2 Асфальт

Производит ли НПЗ асфальт, как готовый продукт?
Да_____ Нет ____
Продутый? Да_____ Нет ____

Опишите процесс переработки и хранения.

_____

_____

Приложите технологическую схему процесса.

8.10.5.3 Тяжелые металлы (Cu, V, Fe, Co, Ni)

Металлы присутствуют в сырой нефти, а некоторые тяжелые металлы используются в качестве катализаторов.

Баланс тяжелых металлов сырой нефти
Металлы в сырой нефти _____ *т/год*
Металлы в продуктах _____ *т/год*
Как разность, выраженная в *т/год*, удаляется?

_____

_____

Катализатор (металл)

В новом катализаторе _____ *т/год*
Возвращенный изготовителю _____ *т/год*
Удален на НПЗ _____ *т/год*

Опишите меры по предотвращению выброса металлов в атмосфер в поверхностную и грунтовую воду.

_____ _____

_____

< 36

8.10.5.4 Галоидированный углеводород

Производится ли галоидирование углеводородов в технологическом процессе? Да_____ Нет_____

Как предотвращается попадание галоидированных углеводородов в окружающую среду?

_____

_____

8.10.6 Потери в процессе производства

8.10.6.1 Укажите расход на факеле (факелах) _____

_____

8.10.6.2 Укажите тип факела (нерегулируемый, с инжекцией пара, и т.п.)

_____

_____

8.10.6.3 Метод регулирования факела (автоматический, откр.-закр.)

_____

_____

8.10.6.4 Как часто производятся замеры течи клапанных штоков, фланцев, насосов, компрессорных уплотнений и давлений на регулирующих клапанах с целью определения потерь углеводородов?

_____

_____

8.10.6.5 Укажите остальные потери углеводородов на "стравливание", помимо потерь в факеле или же в угольном поглотителе.

_____

_____

8.10.6.6 Укажите примерное количество:

Все технологические потоки:

Заканчивающиеся на задвижках, не имеющих глухих фланцев

_____

_____

Технологические сливные стоки _____

_____

Газовые потоки:

Заканчивающиеся на задвижках, не имеющих глухих фланцев

_____

_____

Технологические сливные стоки _____

_____

Потоки легких жидкостей и смесей жидкость-газ:

Заканчивающиеся на задвижках, не имеющих глухих фланцев

_____

_____

Технологические сливные стоки _____

_____

Потоки тяжелых жидкостей:

Заканчивающиеся на задвижках, не имеющих глухих фланцев

_____

_____

Технологические сливные стоки _____

_____

Потоки водорода

Заканчивающиеся на задвижках, не имеющих глухих фланцев

_____

_____

Технологические сливные стоки _____

_____

8.10.7 Укажите стоимость на НПЗ следующих видов топлива (опустите, если эти данные были уже указаны в каких-либо других частях вопросника):

Топочный газ_____
Природный газ _____
Сжиженный природный газ _____
Сжиженный нефтяной газ _____
Бурый уголь _____
Мягкий уголь _____

8.10.8 Твердые топлива:

Приложите копию типового элементарного анализа топлива.

ПРИЛОЖЕНИЕ

2.1 Типовая блок-схема простого НПЗ

2.2 Типовая блок-схема комплексного НПЗ

590

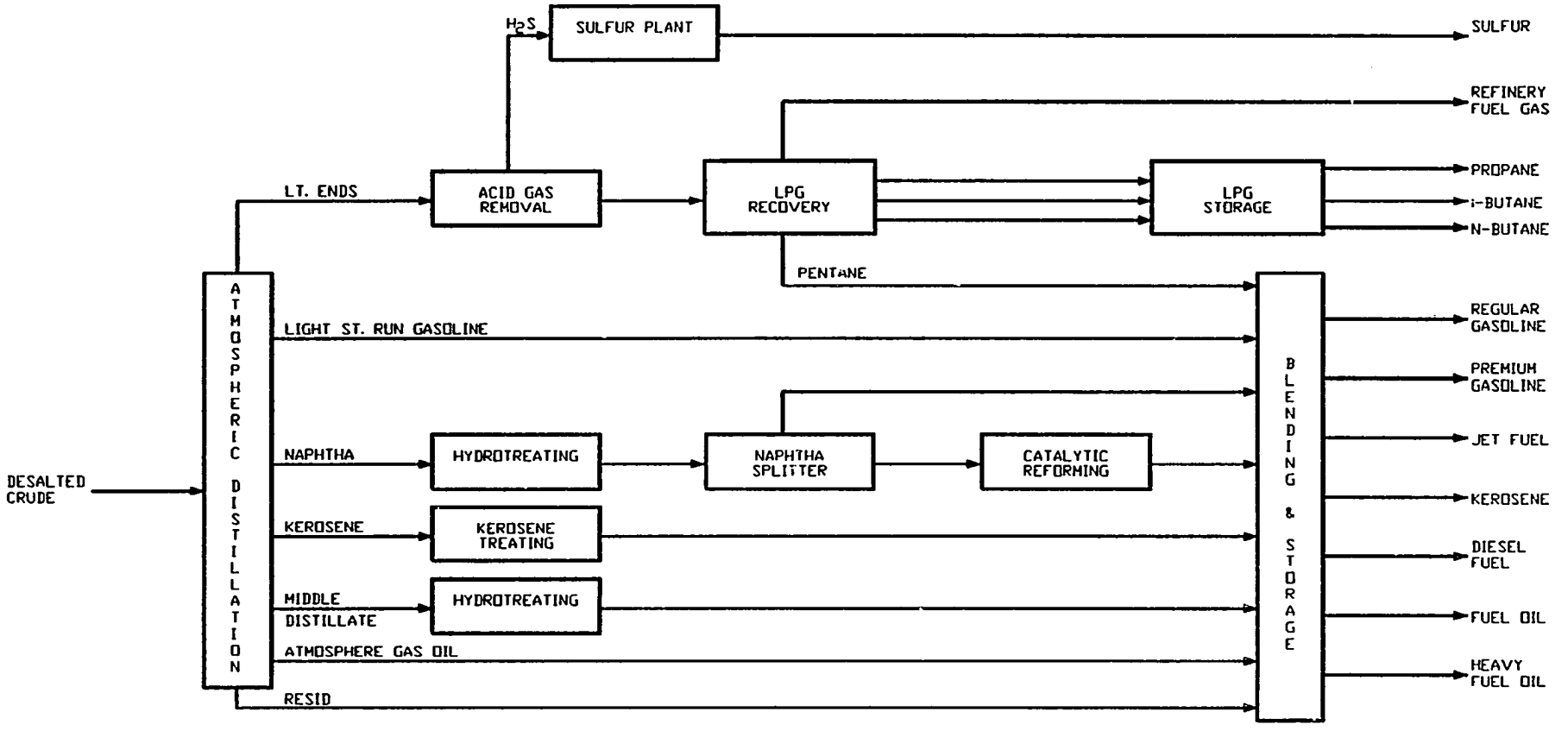

Davy McKee

FIGURE 2.1
A SIMPLE REFINERY
GENERIC BLOCK
FLOW DIAGRAM

228700 | 2063002 | A

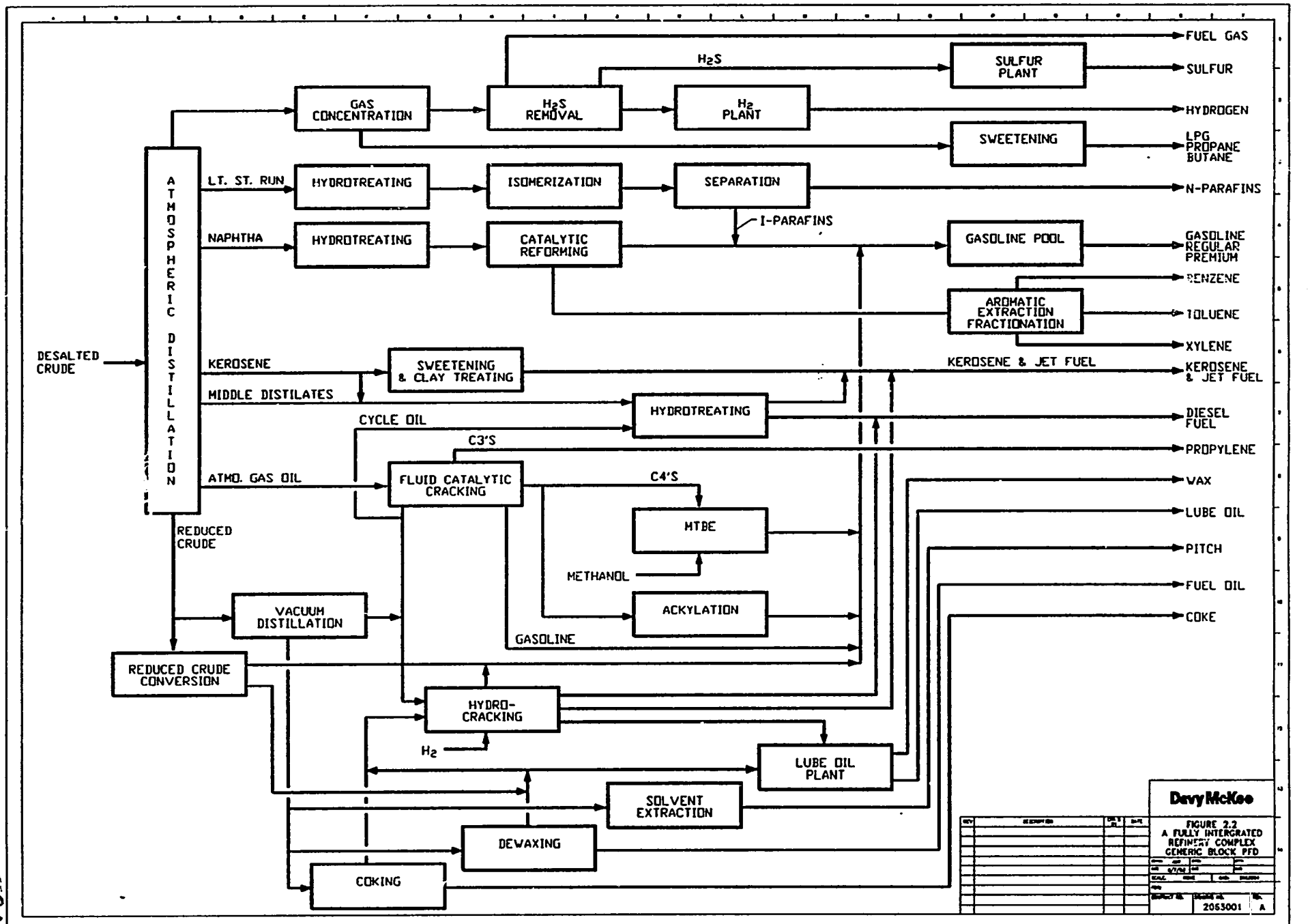
DESALTED CRUDE
ATMOSPHERIC DISTILLATION
LT. ST. RUN
NAPHTHA
KEROSENE
MIDDLE DISTILATES
ATMO. GAS OIL
REDUCED CRUDE
GAS CONCENTRATION
HYDROTREATING
HYDROTREATING
SWEETENING & CLAY TREATING
CYCLE OIL
FLUID CATALYTIC CRACKING
VACUUM DISTILLATION
REDUCED CRUDE CONVERSION
H2S
H2S REMOVAL
H2 PLANT
SULFUR PLANT
SWEETENING
ISOMERIZATION
SEPARATION
I-PARAFINS
CATALYTIC REFORMING
GASOLINE POOL
AROMATIC EXTRACTION FRACTIONATION
KEROSENE & JET FUEL
HYDROTREATING
C3'S
C4'S
MTBE
METHANOL
ACKYLATION
GASOLINE
HYDRO-CRACKING
H2
LUBE OIL PLANT
SOLVENT EXTRACTION
DEWAXING
COKING
FUEL GAS
SULFUR
HYDROGEN
LPG
PROPANE
BUTANE
N-PARAFINS
GASOLINE
REGULAR
PREMIUM
BENZENE
TOLUENE
XYLENE
KEROSENE & JET FUEL
DIESEL FUEL
PROPYLENE
WAX
LUBE OIL
PITCH
FUEL OIL
COKE
Davy McKee
FIGURE 2.2
A FULLY INTERGRATED REFINERY COMPLEX GENERIC BLOCK PFD
2053001
A

592

ФИРМА ДЖОН БРАУН

АГЕНТСТВО СОЕДИНЕННЫХ ШТАТОВ АМЕРИКИ ПО МЕЖДУНАРОДНОМУ РАЗВИТИЮ ПРОГРАММА ПО НЕФТЕПЕРЕРАБАТЫВАЮЩИМ ЗАВОДАМ В СНГ ВОПРОСНИК ЭКОНОМИЧЕСКАЯ И ФИНАНСОВАЯ ОЦЕНКА

I. Тенденции развития экономики и энергетики

1.1 Тенденции развития экономики

а) В чём заключаются основные характеристики экономики, связанные с увеличением производства энергии, в частности, нефтяной сектор (например, отрасли промышленности с интенсивным потреблением энергии, отсутствие резервов нефти и (или) газа, низкий уровень потребления энергии на душу населения и тому подобное)?

б) Какое влияние установление независимости оказало на состояние экономики?

в) Фактический ежегодный темп роста валового продукта страны (с поправкой на инфляцию) в течение последних пяти лет; оценка на текущий год; прогноз по среднегодовому темпу роста валового продукта страны на последующие пять лет. Краткое логическое обоснование предполагаемой тенденции развития иного характера.

г) Ежегодный рост инфляции и девальвация в течение последних пяти лет; предварительная оценка на текущий год; прогноз на последующие пять лет.

д) Предоставьте информацию о сырой нефти и нефтепродуктах, а также других источниках энергии в структуре импорта и экспорта, информацию об их относительном значении в потоках обмена иностранной валюты и баланса платежей.

1.2 Тенденции развития энергетики

а) За каждый год в течение прошедших пяти лет, а также в качестве предварительной оценки на текущий год и прогноза на последующие пять лет предоставьте информацию по следующим вопросам:

-- потребность в энергии с классификацией по её источникам; нефть, газ, уголь, гидроэнергия, атомная энергия, древесина и (или) другие виды энергии, общие количества, выраженные в метрических тоннах (нефтяной эквивалент);

-- потребность в энергии с классификацией по секторам; транспорт, жилой и (или) коммерческий сектор, промышленный сектор, неэнергетический сектор, потери при производстве и передаче энергии, общие количества.

б) Определение основных, относящихся к данному вопросу факторов, которые оказали влияние на направления развития энергетики в прошлом, а также влияния как указанных, так и новых факторов воздействия на направления и тенденции развития энергетики в будущем.

в) В чём заключалась сущность основных факторов, определявших уровень и тенденцию изменения расхода валового продукта страны по потреблению энергии?

1.3 Тенденции развития нефтяного хозяйства

а) За каждый год в течение прошедших пяти лет, а также в качестве предварительной оценки на текущий год и прогноза на последующие пять лет предоставьте информацию по следующим вопросам:

-- потребность в нефтепродуктах: сжиженный нефтяной газ (LPG), премиальный бензин, стандартный моторный бензин, лигроиновый сырьевой материал, керосин, топливо для реактивных двигателей, авиационный бензин, дизельное топливо, топливо коммунально-бытового назначения, остаточное котельное топливо, асфальт, смазочные вещества и другие нефтепродукты (определите);

-- производство: сырая нефть, природный газ, конденсаты природного газа, уголь, атомная электроэнергия, сланцевое масло, спирт, используемый для энергетических целей, другие виды энергии (определите);

-- продукция нефтеперерабатывающих заводов: укажите потребности в нефтепродуктах, перечисленных выше, а также предоставьте информацию по бутану, нефтяному коксу и сере;

-- импорт/экспорт: детальная классификация по указанным выше продуктам для различных форм энергии, включая типы сырой нефти и нефтепродукты.

б) В чём заключались основные факторы, влиявшие на тенденции развития потребностей в энергии и нефтепродуктах, снабжение, экспорт и импорт? В чём сущность ожидаемых изменений указанных тенденций и основных факторов?

4

II. Энергетическая политика

2.1 Агентства, контролирующие источники энергии

Приведите подробную информацию по агентствам, контролирующим операции, планирование, торговлю, транспортировку, производство, финансирование, установление цен и другие действия в нефтяном секторе. Какие произошли изменения после установления независимости в стране?

2.2 Энергетические программы

В чём заключаются основные положения энергетических программ правительства относительно:

* импорта и (или) экспорта нефти;
* разведки месторождений;
* последствий атомной катастрофы в Чернобыле (для Украины);
* предпочтительное развитие и (или) потребление энергии по сравнению с другими видами развития и (или) потребления;
* субсидирование определенных мероприятий или потребителей нефти;
* приведение в соответствие уровня добычи сырого сланца или выпуска продукции нефтеперерабатывающих заводов с уровнем потребностей;
* разработка законов и постановлений по транспортировке или капиталовложениям в энергетическую промышленность;
* производство электроэнергии на основе альтернативных источников;
* введение или совершенствование постановлений по охране окружающей среды;
* обеспечение льготных налоговых программ для проектов, позволяющих экономить энергию;
* другие вопросы, влияющие на нефтеперерабатывающую промышленность.

2.3 Законодательство по углеводороду

Выделите и кратко опишите основной аспект законодательства, влияющего на нефтяной сектор. Какие изменения запрограммированы или запланированы на ближайшее будущее?

595

2.4 Политика ценообразования

Предоставьте информацию по детальному формированию цены в настоящее время в местной валюте за одну метрическую тонну и один литр, приблизительно придерживаясь нижеследующего:

- средняя цена ФОБ сырой нефти или нефти непосредственно на буровой скважине;
- добавка любых налогов или доходов или различий в цене;
- фактическая стоимость для нефтеперерабатывающего завода доставки и страховки продукта;
- добавка любых налогов, доходов или комиссионных вознаграждений;
- фактическая стоимость доставленной сырой нефти для нефтеперерабатывающего завода;
- стоимость энергии и потери в процессе переработки нефти;
- стоимость эксплуатации нефтеперерабатывающего завода, финансирование и другие стоимости;
- доходы нефтеперерабатывающего завода;
- налоги, выплачиваемые нефтеперерабатывающим заводом;
- средняя продажная цена продукции, устанавливаемая нефтеперерабатывающим заводом;
- стоимость транспортировки и (или) страховки при доставке продукции с нефтеперерабатывающего завода организациям розничной торговли и крупным потребителям;
- налоги с оборота и другие налоги при продаже нефтяных продуктов;
- проценты и комиссионные вознаграждения, выплачиваемые сбытовикам, посредникам между производителями и потребителями и организациям розничной торговли;
- средняя цена продукции, оплачиваемой потребителями, не получающими субсидий.

Опишите механизмы и расчёты, применяемые для установления и образованиия цен на:

- сырую нефть, получаемую по импорту;
- сырую нефть, приобретаемую нефтеперерабатывающими заводами;
- продукцию, отправляемую с нефтеперерабатывающих заводов (из расчета нахождения продукции на территории нефтеперерабатывающего завода);
- продукты, реализуемые в системе оптовой торговли;
- продукты, реализуемые в системе розничной торговли.

Для отдельных нефтепродуктов также необходима аналогичная разбивка по ценам при транспортировке от нефтеперерабатывающего завода до потребителя.

2.5 Оперативное планирование и контрольные мероприятия

Приведите подробную информацию относительно процесса планирования и принятия решений по определению источников сырой нефти и сланцев для отдельных нефтеперерабатывающих заводов, а также относительно капитальных вложений, производства и сбыта нефти. Опишите практические методы, используемые для определения стоимостей на нефтеперерабатывающем заводе, а также методы составлления бюджета капитальных вложений и процедуры принятия решений.

Сделайте разбивку по каждому нефтеперерабатывающему заводу, указывая объёмы и стоимость доставки привозимой сырой нефти, выпуск сланцевых продуктов, а также годовые доходы по каждому продукту, выпускаемому нефтеперерабатывающим заводом.

2.6 Импортно-экспортная политика

Приведите подробные сведения относительно контрольных мероприятий, ограничений и образования цен по импорту и (или) экспорту сырой нефти и продуктов ее переработки.

Укажите источники импортируемой сырой нефти, качество, количества, цены, тарифы и другие дополнительные налоги. Приведите аналогичные подробные сведения относительно программ импорта нефтепродуктов и экспорта сырой нефти и нефтепродуктов.

Предоставьте сравнительные с импортируемыми нефтепродуктами данные по их ценам непосредственно на нефтеперерабатывающем заводе и по ценам, включающим стоимость нефтепродуктов, их страховку и транспортировку (СИФ). Какие факторы определяют разницу в ценах нефтепродуктов, импортируемых и перерабатываемых непосредственно на месте?

2.7 Основные положения финансовой политики

Что представлляет собой источник и в чём заключается характер:

прибылей и потерь, происходящих в процессе проведения операций на нефтеперерабатывающем заводе, во время импорта и экспорта продуктов, их транспортировки, маркетинга или розничной торговли?

Каковы источники и какова стоимость капитальных вложений на нефтеперерабатывающем заводе?

597

III. Состав и структура нефтяного сектора

Опишите относительное значение, размер, капиталовложения, объёмы продажи или источники дохода, а также укажите органы, выполняющие различные функции или входящие в состав нефтяного сектора:

* Разведка и производство;
* Нефтепереработка;
* Транспортировка/трубопроводы;
* Импортно-экспортные терминалы;
* Предприятия по выпуску продукции навалом/предприятия по смешиванию продукции;
* Маркетинг/розничная торговля.

Как указанные компоненты взаимодействуют при перемещении, отправке и получении продукта, а также в деле выполнения платежных операций и сбора налоговых доходов или распределении субсидий?

Какие реформы этой системы были введены после установления независимости и какие дальнейшие изменения программируются или планируются?

Как будет осуществляться внедрение частного сектора, включая иностранных вкладчиков капитала, в нефтяной сектор? Будут ли отдельные области закрыты для частного сектора или иностранных участников? Были ли приняты решения в законодательстве, законах или декретах и рассматриваются ли такие решения в настоящее время?

IV. Пошлины, налоги и субсидии

Предоставьте информацию по тарифам и объёму применения современной импортной таможенной пошлины и других дополнительных налогов на импортируемую сырую нефть и нефтепродукты, по плате за право разработки недр, налогам и другим налогообложениям, связанным с добычей и переработкой сырой нефти; по налогам и дополнительным обложениям, выплачиваемым нефтеперерабатывающими заводами или налогам и дополнительным обложениям, оплачиваемым фирмами, занимающимися маркетингом, и организациями розничной торговли.

Если это не было отмечено ранее в настоящем вопроснике, то необходимо показать составные части налога, обуславливающие повышении цены на участке между нефтеперерабатывающим заводом или импортным терминалом и потребителем на отдельные продукты в местной валюте за одну метрическую тонну.

Аналогичным образом, предоставьте информацию о размере субсидий в структуре цены на отдельные продукты, а также источники финансирования таких субсидий, например, перекрестная компенсация за счёт налогов на другие продукты.

Опишите основные причины ввода особых налогов или субсидий, направленных на определённые области применения или определённых потребителей.

Необходимо также выделить и описать налоговую и субсидионную структуру в других энергетических областях (газ, уголь, гидроэнергия, атомная энергия), в частности, если таковая оказывает влиятие на цену, потребность, снабжение или конкурентоспособность нефтепродуктов или на политику, проводимую по отношению к нефтеперерабатывающему заводу.

V. Операционные экономические положения влияющие на нефтеперерабатывающие заводы

5.1 Вводимые ресурсы

Предоставьте ежегодные или средние количества, источники, цены и стоимости сырья, приобретенного каждым нефтеперерабатывающим заводом и для всей страны в целом:

* сырая нефть;
* преобразованные дистилляты и другие исходные сырьевые материалы;
* катализаторы и химические вещества;
* другие минералы.

В чём заключаются основные проблемы в деле поставки указанных материалов нефтеперерабатывающим заводам?

Изменилась ли каким-то образом ситуация снабжения нефтеперерабатывающих заводов после установления независимости? Значительно ли изменились цены на продукты, поступающие по системе снабжения, чтобы обусловить смену источников снабжения.

599

5.2 Операционные расходы

Предоставьте подробную информацию относительно расходов на нефтеперерабатывающем заводе:

- Рабочая сила
  - Количество;
  - Заработная плата;
  - Стоимость дополнительных льгот;
- Виды приобретаемого топлива (нефть, газ, уголь);
- Виды приобретаемых источников энергии (электричество, вода, пар, другие);
- Страховка;
- Технический уход и поддержание;
- Стоимости транспортировки и доставки на различные участки нефтеперерабатывающего завода;
- Местные налоги.

5.3 Финансовые расходы

Предоставьте подробную информацию относительно задолженности каждого нефтеперерабатывающего завода и его ежегодных общих производственных финансовых затрат:

- Проценты и амортизация;
- Начисление износа;
- Налоги на доход;
- Особые издержки
  - Чистая прибыль и потери каждого нефтеперерабатывающего завода.

5.4 Объём производства и источники доходов

Предоставьте информацию относительно количества, пункта назначения, цены и стоимости каждого отдельного продукта, проданного на каждом нефтеперерабатывающем заводе за каждый год в течение последних пяти лет.

Какие встречались важные проблемы, связанные со сбытом продукции нефтеперерабатывающего завода, и какие намечаются изменения?

Опишите сущность и предоставьте подробную информацию относительно экспортных операций по продукции любого нефтеперерабатывающего завода. Укажите цену экспортируемого продукта, пункт его назначения и методы его доставки?

Какие количесства специфического исходного сырья передаются для химического производства, его цена и стоимость?

Произведите сравнение ежегодного общего потока доходов с общими стоимостями для каждого нефтеперерабатывающего завода.

101

ВОПРОСНИК ПО ИССЛЕДОВАНИЮ ПРОБЛЕМ ОХРАНЫ ОКРУЖАЮЩЕЙ СРЕДЫ

I. Цель настоящего вопросника заключается в определении направлений национальной политики относительно охраны и очистки окружающей среды.

II. Национальная политика

А. Имеется ли законодательство, определяемое национальной политикой, в котором указывается, что сбросы загрязняющих веществ должны быть лимитированы, какие стандарты должны быть разработаны, как контролировать сбросы загрязняющих веществ и каким образом вносить поправки к условиям в случаях, когда уровни сбросов превышают допустимые нормы?

Б. Состояние на июнь 1993 года

1. Законодательство - это специфический закон по контролю:

Загрязняющее вещество	Нет	Да	Предложение (Да/Нет)	Фактическая ожидаемая дата утверждения
Воздушные загрязнения	_____	_____	_____	_____
Сброс сточных вод	_____	_____	_____	_____
Сброс твердых отходов	_____	_____	_____	_____
Грунтовые воды	_____	_____	_____	_____

2. Постановления/нормы - допустимые уровни загрязнения:

Загрязняющее вещество	Нет	Да	Предложение (Да/Нет)	Фактическая ожидаемая дата утверждения
Воздушные загрязнения	_____	_____	_____	_____
Сброс сточных вод	_____	_____	_____	_____
Сброс твердых отходов	_____	_____	_____	_____
Грунтовые воды	_____	_____	_____	_____

102

3. Опубликованные данные

Если были установлены нормы допустимых сбросов или выпуска в воздух загрязняющих веществ, предоставьте, пожалуйста, копию таблиц, в которых указаны допустимые уровни сброса или выпуска в воздух загрязняющих веществ.

III. Ответственность

A. Возложены ли полномочия или ответственность за контроль сброса или выпуска загрязняющих веществ (воздух, вода, твердые отходы и грунтовые воды) только на одну административную правительственную службу?

_____ Да _____ Нет

Если да: Имя и фамилия _____
Адрес _____
_____
Телефон _____
Факс _____

Если нет, то кто отвечает за:

Воздушные загрязнения:
Имя и фамилия _____
Адрес _____
_____
Телефон _____
Факс _____

Сброс сточных вод: Имя и фамилия _____
Адрес _____
_____
Телефон _____
Факс _____

Сброс твердых отходов:
Имя и фамилия _____
Адрес _____
_____
Телефон _____
Факс _____

Грунтовые воды:

Имя и фамилия _____

Адрес _____

_____

Телефон _____

Факс _____

Б. Придерживается ли правительство вашей страны политики, принятой многонациоиалным договором, пактом или ассоциацией по контролю окружающей среды? _____ Да _____ Нет

Другие страны: _____

_____

_____

_____

IV. Современное положение по вопросам окружающей среды

Рассматривается ли в каком-либо правительственном органе или уже завершена техническая оценка современного положения проблем загрязнения воздуха, воды, твёрдых отходов или почвенных вод? _____ Да _____ Нет

Если да, то имеется ли сводная информация по отчету (отчетам)? _____ Да _____ Нет

При наличии приложите копию такой информации.

V. Нефтепереработка

В случае необходимости изменения состояния окружающей среды, очистительные операции могут потребовать выполнение различных видов деятельности, проведение работ в различных областях и установление определенного порядка очередности.

Если это так, пожалуйста, определите степень важности в нижеприведенных категориях, которую вы и местное население считают наиболее и наименее необходимым (Номер 1 - максимальный приоритет, номер 4 - минимальный приоритет):

Необходимость контроля загрязнений	Степень важности			
Воздушные загрязнения	1	2	3	4
Сброс сточных вод	1	2	3	4
Сброс твердых отходов	1	2	3	4
Грунтовые воды	1	2	3	4

604

APPENDIX C

REVIEW OF COAL UTILIZATION TECHNOLOGIES

5

C. COAL AS AN ENERGY SOURCE

1. General Review of Potential Refinery Use For Coal

The availability of native coal makes a review of coal as an energy source of interest to the national economy. A study on the use of coal as an adjunct or substitute for hydrocarbon fuel streams is, therefore, included in this evaluation.

The refining of crude petroleum in the USA typically requires 380 000 BTU per barrel (crude feed) of fired fuel. Heat is provided by burning a variety of fuels in directly fired heaters. Generally the fuels are a collection of effluent streams in both gaseous and liquid forms from the various operations around the refinery complex.

Coal is frequently used in industry as a fuel source. Generally it is used on large capacity boiler units. There are significant base investment and operating costs and activities associated with feed and ash handling equipment, sulfur removal, etc. that can be charged out over large installations but prove too inhibitive in the economics of small units.

There are many ways to utilize coal as a fuel. Those most applicable to the situation at hand are discussed below. The first two, direct coal firing and coal gasification, are discussed in some detail. Several others, such as coal liquefaction, coal-oil mixtures, coal fired gas turbines are touched upon briefly.

The use of coal in the existing refinery process heaters would most likely be restricted to one of the methods in which a product fuel can be produced in one location and piped to the various users. Plot space in the vicinity of the existing furnaces along with safety considerations typically does not allow for coal and ash storage and handling facilities within the refinery processing area. Also existing equipment is not designed for the particulate loading experienced in the flue gas with coal firing. In addition, any required sulfur removal equipment would have to deal with flue gas clean-up on an individual process heater basis if there were not a central coal processing facility.

The entire refinery energy and equipment picture dictates if coal could be incorporated into the refinery as a acceptable energy source. If a new process heater or utility boiler would be needed and the fuel balance allows for another fuel source, then the use of coal may be justified and the new coal technologies would be worth looking at. If the residual fuel picture changes because of modifications to the refinery, coal usage may be justified.

2. Direct Coal Firing

Coal usage is not a simple thing anymore. Gone are the days of stoking the fire by shovelful of run-of-mine coal and just letting it burn. Coal may need to go through physical cleaning, sizing, and drying just to get it to the furnace. Burners are specially designed to achieve optimum efficiency and low nitrogen oxide emissions. Additives are injected to reduce ash sticking to heater tube walls, reduce sulfur dioxide in the flue gas, etc. Flue gas may be subjected to further treatment such as wet scrubbing to reduce sulfur dioxide to meet tighter levels of environmental acceptance.

Traveling grate burners bring the coal automatically to the burning chamber where the coal is burned. Coal with a moisture content much above 30 percent must be dried before burning, so lignite/brown coals would most likely need pre-combustion drying. Hot under grate air can be used for this purpose. Ash builds up on the grate until it drops into a hopper. The ash is later removed from the hopper. Sulfur, however, must typically be dealt with after combustion where it is removed as sulfur oxides. Add- on sulfur dioxide removal equipment adds significantly to the cost of a unit.

Modern direct coal burning systems include atmospheric and pressurized fluidized bed combustion (AFBC and PFBC) units that provide for gas burning, clean-up, and heat recovery all in one unit. Limestone is used as part of the fluidizing medium and the calcium present in it reacts with the sulfur dioxide before it is able to escape from the combustion chamber. The result is a non-toxic disposable by-product.

FBC technology is applicable to a wide variety of fuels including a wide range of coals, residual oil, and petroleum coke. AFBC technology for boilers is available commercially from a large number of licensors, while PFBC technology is still considered to be in the development stages. The application of FBC technology to a process heater may be possible, but it would require extensive pilot test runs and special considerations in equipment design.

3. Coal Gasification

Coal gasification has been utilized for a long time and there are several companies (Texaco, Lurgi, IGT, KRW) that have commercialized processes. The products from the gasification, hydrogen, carbon monoxide, carbon dioxide, and others, can be used as a chemical feedstock or a fuel gas. To produce a fuel gas of medium range heating value (9.3 - 18.6 Mj/m^3 or 250 - 500 Btu/SCF) suitable for burning in a process heater, oxygen must be used in the gasification. Because of the reducing conditions present in the gasifiers, most of the sulfur in the coal is converted to hydrogen sulfide. Hydrogen sulfide can be removed from the gas stream by using a number of available processes. In addition, it can be turned into elemental sulfur.

Development work is being done for in-situ desulfurization in a fluidized bed coal gasifier. This process is much the same as the PFBC except that the product is a gas with a heating value instead of combustion product gases. It is also similar to the FBC technology in that it can utilize a wide variety of fuels, such as the sour residual oil produced within the refinery.

Fuel gas produced in this way can be piped into a plant fuel header and used anywhere around the facility. The attractiveness of this option is that the coal usage would be in one central location, while the fuel users could be in many different locations.

Another possible use of the gas produced via gasification could be as a fuel for a gas turbine. The gas turbine could be used to generate electricity or to provide a direct large capacity mechanical drive such as a compressor. The thermal efficiency of a gas turbine is typically raised by using the turbine exhaust gas to raise steam in a waste heat boiler in a co-generation process.

Given the availability of coal in Kazakhstan, coal gasification technology should be watched closely and given full consideration at such time that energy economics dictate its use. The selection of the proper technology to best fit the local brown coal characteristics should be kept in mind. Initial investment cost is high and although a project may be justified from a DCF or NPV basis, a shortage of hard currency may delay or defer action.

4. Other Technologies

Coal liquefaction

Production of liquid fuels from coal can be either indirect or direct. In indirect liquefaction, the synthesis gas produced in a gasification step is further reacted to produce a readily burnable fuel (i.e., via the Fischer Tropsch process to naphtha, diesel and waxes or via syngas to methanol to gasoline). Since the gasification product would be an adequate fuel for the heaters in the refinery, there would be no need to go beyond that step to liquid fuels.

Direct liquefaction producing a Number 2 type fuel oil would be more applicable to the fuel needs in the refinery. Several processes have been developed since the 1960s including H-Coal, SRC-I, Exxon Donor Solvent, and SRC-II (in the USA). The high cost and inefficiency associated with these processes led to the cutback of further development of the technologies as they stood. The early processes have been modified and further developed by the United States Department of Energy (US DOE) and industrial partners into two-stage liquefaction processes. These processes are still not available on a large commercial scale. Estimates are that the cost of a barrel of oil produced by coal liquefaction using such methods might approach $25 per barrel by the late-1990s.

Coal oil / water mixtures

The use of coal slurried with oil or water to produce a usable fuel is also the subject of numerous studies and optimizations. There are even annual conferences on "Coal & Slurry Technology" sponsored by the Coal & Slurry Technology Association and the U.S. DOE's Pittsburgh Energy Technology Center (PETC). Coal water mixtures can be prepared with up to 70 percent solids, while current technologies and pilot plant results show coal oil mixtures are limited to 30 to 50 percent solids. Coal-oil mixtures could be prepared in one location and pumped around the plant to the various process heaters, however, emissions in terms of sulfur dioxide, NO_x and particulates would be a problem at each furnace.

Coal-fired gas turbines

Direct coal-fired gas turbines are being developed and improved by General Electric, Westinghouse, and United Technologies. The use of gas turbines in this manner on the refinery would most likely be restricted to electricity generation. Solids and impurities deposition on blades and casings would likely require frequent cleaning and duplication of equipment to keep an optimal amount of equipment "on-line". Environmental control requirements would also likely limit the application of this technology to high quality coals.

Fuel cells

The combination of coal gasification and emerging fuel cell technology presents an attractive high efficiency electrical and heat energy generation possibility. Current projections, based on work sponsored by the US DOE, indicate an efficiency level between 45 and 55 percent in converting hydrocarbons directly to electricity. The hydrogen and carbon monoxide rich fuel from coal gasification is suited to fuel cell use, with carbon dioxide used in the cathode side of the cell.

Of the four major fuel cell technologies, two are worthy of mention here - phosphoric acid and molten carbonate. Phosphoric acid fuel cells are at a more advanced state; however, they operate in the range of 200 °C compared to molten carbonate cells that operate at 650 °C.

The molten carbonate fuel cell is best suited for use with coal gasification in applications where good quality heat is needed. The exhaust gas temperature of 650 °C is useful in the generation of high quality steam for process purposes. The use of bottoming cycles further enhances the system.

Overall efficiencies including electrical and recovery of exhaust gas heat to generate steam are in the order of 80 percent. The US DOE is sponsoring sub-megawatt tests of commercial sized units. These tests are scheduled for the 1993 calendar year. While the technology is not ready for commercial use, it is potentially attractive and should be watched closely.

5. Coal in Kazakhstan

In the future, the use of coal within the refineries is not feasible. Some reasons include:

- Kazakhstan coal is mainly high ASH, approximately 50%
- Refinery furnaces are designed for fuel gas and fuel oil. Conversion to coal burning will require replacing or revamping the existing furnaces. Feasibility and economic analysis studies of furnace technology and waste heat recovery are required before considering conversion.
- Burning coals with high ash and sulfur content and metallic contaminants can result in unscheduled furnace shut-downs and clean-up problems.
- Coal use may pose special environmental considerations such as the application of advanced technologies for flue gas treatment and cleaning, ash disposal, and waste heat recovery.

6. Coal in the Kazakhstan Refineries

At this time no coal is used in any of the Kazakhstan refineries.

BIBLIOGRAPHY

Cooper, B. R., & Ellingson, W. A. (1984). The Science and Technology of Coal and Coal Utilization. New York: Plenum Press.

R. Dellefield (personal communication, July 19, 1991). Morgantown Technology Center, United States Department of Energy. Morgantown, West Virginia.

Engineering & Economics Research, Inc., Hagler, Bailly & Co.,Inc., PEI Associates Inc., Spaite, P. W. (Eds.). (1986). Emerging Clean Coal Technologies. Park Ridge, NJ: Noyes Data Corporation.

Ekmann, J. M. (personal communication, July 15, 1991). Coal Combustion Division, Pittsburgh Energy Technology Center, United States Department of Energy. Pittsburgh, Pennsylvania.

Feldkirchner, H. (personal communication, July 11, 1991). Institute of Gas Technology. Chicago, Illinois.

Lord, N. W., Ouellette, R. P., Farah, O. G., & Cheremisinoff, P. N. (1982). Coal-Oil Mixture Technology. Ann Arbor, Michigan: Ann Arbor Science Publishers.

McGurl, G. V. (1990, March). Two-stage liquefaction of coal. PETC Review. Pittsburgh, Pennsylvania: Pittsburgh Energy Technology Center.

Podolski, W. F. (personal communication July 19,1991). Chemical Technology Division. Argonne National Laboratory. Argonne, Illinois.

Scowden, J. (personal communication July 15, 1991). Detroit Stoker. Monroe, Michigan.

Stauffer, C. (personal communication July 11, 1991) Process Sales Company. Houston, Texas.

Vander Molen, R. H. (personal communication July 19, 1991). Combustion Power Company. Menlo Park, California.

612

APPENDIX D

ABBREVIATIONS

613

ABBREVIATIONS

°API	deg API (gravity of oil fractions, defined by API)
°C	degree Celsius
°F	degree Fahrenheit
%	per cent
/	per (e.g., tonnes/day)
A	ampere
ACFM	actual cubic feet per minute
AFBC	Atmospheric Fluidized Bed Combustion
API	American Petroleum Institute
ASTM	American Society of Testing Materials
BACT	best available control technology
BFW	boiler feed water
BOD	biological oxygen demand
BPCD	barrels per calendar day
BPSD	barrels per stream day
BS&W	Basic, Sediment and Water
BTX	benzene toluene xylene
Btu	British thermal units
C.F.	characterization factor
CCR	continuous catalyst regeneration
CIS	confederation of independent states
COD	chemical oxygen demand
CRT	cathode ray tube (television monitor)
CRU	catalytic reforming unit
CT	current transformer
CV	calorific value (heat of combustion)
DAF	dissolved air flotation unit
DCF	discounted cash flow
DCS	Distributed Control System
DEA	Diethanolamine
DP	differential pressure
EP	end point
EPA	Environmental Protection Agency (U.S.)
FBP	final boiling point
FCC	fluid catalytic cracking
FGD	flue gas desulfurization
FOE	fuel oil equivalent
FOG	fats, oils, & grease
G	giga(10^9)
GCV	gross calorific value
GDR	German Democratic Republic (formerly East Germany)
GJ	giga joules
HC	hydrocarbons
HDS	hydrodesulfurization

HDT	hydrotreating
HP	high pressure
Hg	mercury
Hz	hertz
IBP	initial boiling point
IGT	Institute of Gas Technology
ISBL	inside battery limit
J	joule
KRW	Kellogg Rust Westinghouse
KVAR	Kilovolt-Amperes Reactive
LHSV	Liquid Hourly Space Velocity
LP	linear programming/low pressure
Lube	Lubricating
M	mega(10^6)
MEA	Monoethanolamine
MEK	methyl ethyl ketone
MHC	mild hydrocracking
MON	motor octane number
MOV	motor operated valve
MPa	Megapascal, a unit of pressure
MSW	municipal solid waste
MTA	metric tons per annum
MTBE	methyl tertiary butyl ether
MTBF	mean time between failures
MVA	mega volts ampere
MVAR	mega voltampere reactive
MW	mega watts
NAAQS	National Ambient Air Quality Standards
NCV	net calorific value
NHT	Naphtha Hydrotreating Unit
NIS	newly independent states
NO_x	Oxides of Nitrogen
NPDES	National Pollutant Discharge Elimination System
OEM	original equipment manufacturer
OSBL	outside battery limit
OSHA	U.S. Occupational, Safety, & Health Agency
OVA	Organic Vapor Analysis
P	Proportional Control
PFBC	Pressurized Fluidized Bed Combustion
PI	Proportional/Integral Control
PID	Proportional/Integral/Derivative Control
PLC	Programmable Logic Controller (part of DCS)
PONA	Paraffins, Olefins, Naphthanes and Aromatics
PT	Potential Transformer
Pa	pascal, a unit of pressure
RCC	reduced crude conversion
RI	Refractive Index
RON	research octane number
RTD	Resistance Temperature Detector
RVP	Reid Vapor Pressure
S.R.	Straight Run
SCFD	standard cubic feet per day
SCFH	standard cubic feet per hour

SCFM	standard cubic feet per minute
SG	specific gravity
SO_x	Oxides of sulfur
SRC	solvent refined coal
T	tera (10^{12})
TAR	turn around
TBP	true boiling point
T/C	Thermocouple
TDS	total dissolved solids
TEFC	totally enclosed fan cooled
TEL	tetraethyl lead
TOC	total organic carbon
TSS	Total Suspended Solids
UOP K	UOP Characterization Factor
V	volt
VGO	vacuum gas oil
VOC	volatile organic compound
WATSON K	Watson Characterization Factor
WWTP	wastewater treatment plant
XP	explosion proof
atm	atmosphere or atmospheres
bar	bar
cP	centipoise
cSt	centistokes
cal	calorie
cm	centimeters
cps	cycles per second
day	day
ft^3	cubic feet
ft	feet or foot
g	gram
gal	gallons
gpm	gallons per minute
h	hour
hp	horse power
in	inch or inches
k	kilo
kA	kiloamperes
kPa	kilo pascal, a unit of pressure
kV	kilovolts
kWh	kilowatt hour
kcal	kilo calories
kg	kilogram
kg/cm^2	kilogram per square centimeter
lb	pound or pounds
l	liter or litre
m	meter or metre
max.	maximum
mg	milligram
mi	mile
million	million(10^6)
min	minute
min.	minimum

mm	millimeters
mol	mole
n	normal
ohm	ohm
pH	pH, a measure of acidity or strength of a base.
percent	percent(or %)
phase	phase (electrical)
ppb	parts per billion
ppm	parts per million
ppmv	parts per million (volume)
ppmw	parts per million (weight)
psi	pounds per square inch
psia	pounds per square inch absolute
psig	pounds per square inch gauge
ptb	pounds per thousand barrels of oil
rpm	revolutions per minute
sec	seconds
tonne	metric ton
tonnes	metric tons
vol	volume
wt	weight
y	year

D:\USAID\ABBRVTNS

APPENDIX E

ENERGY COMPARISONS

REFINERY ENERGY BALANCE AND "ENERGY DEMAND" CRITERIA

To properly undertake an appraisal of the energy efficiency of Eastern European refinery operations, it was apparent that some standard measure of the performance of typical modern US refinery installations was essential. A literature search revealed two documents describing typical energy consumptions in the US refining industry based upon surveys and energy audits as follows:

R.V. Elshout, Barnard and Bunk Engineers and Constructors Inc., Pasadena, California, Hydrocarbon Processing, July 1982, Pg. 109.

R.O. Pelham and R.D. Moriarty, Profimatics, Inc., Thousand Oaks, California, Hydrocarbon Processing, July 1985, Pg. 51.

The 1982 article lists typical utility requirements for a range of common refinery processing units, whereas the 1985 article analyzes the thermodynamic elements of energy usage for a typical 80 000 BPSD fuels refinery. These two references assessed US refinery energy performance from 1972 through the early 1980s. This is the period during which the US refining industry had recorded energy utilization improvements of about 25 percent.

By convention, the volumetic based English system of measurements (Barrels, API, BTU's, etc.) is still preferred by US refineries whereas mass and the metric or System International units (grams, metric tons, specific gravity, joules, kilocalories, etc.) are commonly used in Europe. Therefore, it is necessary to establish equivalent values between the two methods of measurement so that equitable comparisons can be made. The typical US refinery unit energy demands provided by Elshout have therefore been transformed from American to European practice as shown in the following Tables 1-3 by the provision of typical API gravities (where appropriate) for the unit feedstocks.

Direct and positive comparison of total energy demands between similar unit operations is still not possible; however, due to the individual refiner's selection of electric or motive steam for the provision of mechanical power land also to the selection of cooling water or air as the sink for rejected heat. Consequently, suitable conversions to the basic fuel oil energy source were required and are shown in Table 4 in both the European and American usages. DMC believes that its selected efficiency factors of 80 percent for steam generation; 35 percent for power generation; and 60 percent for combined pump with motor driver are reasonable or conservative in deriving the selected conversion to fuel oil equivalence to obtain a common, simple, and effective measure of total energy demand.

119

In a further attempt to extend and update the validity of these data, the most recent publication of refinery unit licensors' information (Refiner's Notebook - "Hydrocarbon Processing," November 1990) was selected to reflect technical and economic trends, together with other available information, to supplement lube oil energy demands. A consolidated listing of the results is shown in Tables AP-E.1 through AP-E.13.

Finally, Table AP-E.14 attempts a reconciliation of the "Unit Total Energy Requirements" chosen from the above-cited development and based upon Elshout, with the overall typical fuels refinery energy usage reported in the Profimatics survey. The predicted results of 378 455 BTU per barrel versus 380 000 BTU per barrel required by the "reasonably efficient fuels refinery" cited in the Profimatics example provides reasonable assurance for the general validity of the methodology even though it is claimed that improvements are continuing at the rate of 1 to 2 percent per year.

For convenience, Table AP-E.15 summarizes the "Refinery Unit Energy Demand Criteria" selected as best representing expected and obtainable refinery practice under current technical knowledge and economic pressures. These values were used for the overall assessment of the Eastern European energy efficiency of refinery operations.

In conclusion, it is well to recognize that in these selected energy demands, the potential for a further 15 to 20 percent reduction in energy usage could be technically/economically feasible by prudent retrofitting in existing plant but more likely in applying modern design techniques to future energy efficient installations where proper long term economic criteria are both encouraged and applied.

TABLE AP-E.1 - TYPICAL REFINERY UTILITY USAGE

****

PER 1000 BPSD CAPACITY EXCEPT AS NOTED

	TYPICAL °API	FUEL FIRED M BTU/H	18 °F ΔT CW GPM	POWER KWH/H	STEAM LB/H	EXCH SURFACE FT2
CRUDE	25.0	2 500	375	10	333	1 200
	40.0	3 330	500	13	250	1 000
VAC DISTILLATION	16.0	2 100	410	15	1 250	2 000
VISBREAKER	9.0	8 000	240	15	1 250	
THERMAL CRACKER	9.0	20 000	2 000	31	1 900	
DELAYED COKER	9.0	9 120	830	50	1 450	
FLUID COKER [1]	9.0	-250	830	175	-3 300	
PROPANE DEASPHALTING	9.0	15 200	1 000	40	2 100	
HYDROTREATING NAPHTHA [2]	45.0	2 750	150	50	700	900
GAS OIL	25.0	3 500	250	60	700	
CAT REFORMING (90 RON)	45.0	16 000	550	150	1 800	
CAT CRACKING FCC (3 & 4)	20.0	800	800	275	650	
TCC	20.0	2 000	800	225	-650	
HYDROCRACKING [5]	20.0	8 000	750	200	800	2 100
CAT POLYMERIZATION	110.0		350	2 160	8 000	
SULFUR PLANT (10 TPD S)		1 500		45	-2 800	
MEA UNIT (10 TPD S)			220	12.5	4 200	
H_2 PLANT (10 MM SCFD) (6 & 7)		200	200	1 400	1 800	

(1) INCLUDES A[illegible]WER FOR AVERAGE 15% PRODUCTION COKE BURNING
(2) COMPRESSO[illegible]VER COULD BE SUPPLIED FROM ASSOCIATED CAT REFORMER
(3) POV[illegible]IC[illegible]GENERATOR BLOWER BUT NO CREDIT FOR LETDOWN TUR
(4) [illegible]OILER WASTE HEAT RECOVERY
(5) [illegible] H2 MAKE-UP COMPRESSOR
(6) [illegible] - STEAM METHANE REFORMING
(7) [illegible]OSTER COMPRESSOR TO 1750 PSIG
(8) [illegible] 1982, PG 109

AGE [1]

********** **********

PER 1.0 BBL CAPACITY EX( )

	TYPICAL °API	FUEL FIRED M BTU/H	18 °F ΔT CW GPM	POWER KWH/H	STEAM LB/H	EXCH SURFACE FT2
CRUDE	25.0	60 000	540	0.24	7.992	28.8
	40.0	79 920	720	0.312	6	24.0
VAC DISTILLATION	16.0	50 400	590.4	0.36	30	48.0
VISBREAKER	9.0	192 000	345.6	0.36	30	
THERMAL CRACKER	9.0	480 000	2 880	0.744	45.6	
DELAYED COKER	9.0	218 880	1 195.2	1.2	34.8	
FLUID COKER [2]	9.0	-6 000	1 195.2	4.2	-79.2	
PROPANE DEASPHALTING	9.0	364 800	1 440	0.96	50.4	
HYDROTREATING NAPHTHA [3]	45.0	66 000	216	1.2	16.8	21.6
GAS OIL	25.0	84 000	360	1.44	16.8	
CAT REFORMING (90 RON)	45.0	384 000	792	3.6	43.2	
CAT CRACKING FCC (4 & 5)	20.0	248 846	1 152	6.6	15.6	
TCC	20.0	277 646	1 152	5.4	-15.6	
HYDROCRACKING [6]	20.0	192 000	1 080	4.8	14.4	50.4
CAT POLYMERIZATION	110.0	0	504	3.8	192.0	
SULFUR PLANT (1.0 TONNE S)		3 600 000		108.0	-6 720	
MEA UNIT (1.0 TONNE S)			31 680	30.0	10 080.0	
H_2 PLANT (1000 SCF) (7 & 8)		480	28.8	3.4	4.3	

(1) REF: HYDROCARBON PROCESS .Y, 2, I G 9
(2) INCLUDES AIR BLOWER FO A\ 5 RO ION COKE BURNING
(3) COMPRESSOR POW D I OCIATED CAT REFORMER
(4) NO CREDIT FOR LETDO
(5) FOR CO BOILER WA
(6)
(7)
(8)

4

122

	TYPICAL SP GR	FUEL FIRED KCAL	10 °C ΔT CW M3	POWER KWH/H	EXCHANGE STEAM KG	SURFACE m2
CRUDE DISTILLATION	0.9042	105 264	14.2	1.67	25.3	18.6
	0.8251	153 650	20.8	2.38	20.8	17.0
VAC DISTILLATION	0.9593	83 337	14.6	2.36	89.4	29.3
VISBREAKER	1.0071	302 407	8.2	2.25	85.1	
THERMAL CRACKER	1.0071	756 017	27.2	33.77	-44.3	
DELAYED COKER	1.0071	344 744	28.3	7.50	98.7	
FLUID COKER [2]	1.0071	-9 450	28.3	26.26	-224.7	
PROPANE DEASPHALTING	1.0760	537 768	31.9	5.62	133.8	
HYDROTREATING NAPHTHA [3]	0.8017	130 588	6.4	9.43	59.9	15.8
GAS OIL	0.9042	147 369	9.5	10.03	53.1	
CAT REFORMING (90 RON)	0.8017	759 784	23.5	28.28	154.0	
CAT CRACKING FCC (4 & 5)	0.9340	422 627	29.4	44.50	47.7	
TCC	0.9340	471 539	29.4	36.41	-47.7	
HYDROCRACKING [6]	0.9340	326 083	27.5	32.27	44.1	31.6
CAT POLYMERIZATION	0.5859		20.5	41.27	936.3	
SULFUR PLANT (1.0 TONNE S)		999 295		119.02	-3 360.0	
MEA UNIT (1.0 TONNE S)			132.0	33.06	5 040.0	
H_2 PLANT (1000 SCF) (7 & 8)		4 038	3.6	112.22	65.5	

(1) REF: HYDROCARBON PROCESSING JULY, 1982, PG 109
(2) INCLUDES AIR BLOWER FOR AVERAGE 15% PRODUCTION COKE BURNING
(3) COMPRESSOR POWER COULD BE SUPPLIED FROM ASSOCIATED CAT REFORMER
(4) NOTE: POWER INCLUDES REGENERATOR BLOWER BUT NO CREDIT FOR LETDO
(5) NOTE: 5 W% COKE BURNING INCLUDED BUT NO CREDIT FOR CO BOILER WA
(6) POWER EXCLUSIVE OF H2 MAKE-UP COMPRESSOR
(7) FUEL INCLUDES FEED - STEAM METHANE REFORMING
(8) POWER INCLUDES BOOSTER COMPRESSOR TO 120 BARG

121

TABLE AP-E.4 - TYPICAL REFINERY UTILITY USAGE [1]

****

PER 1.0 TONNE CAPACITY EXCEPT AS NOTED

	TYPICAL SP GR	FUEL FIRED KCAL	10 °C ΔT CW KCAL	POWER KCAL	STEAM KCAL	TOTAL ENERGY KCAL/M.T	SAY USE TOTAL ENERGY MKCAL/M.T	SAY USE TOTAL ENERGY MBTU/Bbl
CRUDE DISTILLATION	0.9042	105 264	8 532	4 012	17 697			
	0.8251	153 650	12 467	5 715	14 545			
VAC DISTILLATION	0.9593	83 337	8 786	5 672	62 547			
VISBREAKER	1.0071	302 407	4 908	5 402	59 578			
THERMAL CRACKER	1.0071	756 071	16 341	81 037	-30 981			
DELAYED COKER	1.0071	344 744	16 951	18 008	69 111			
FLUID COKER [2]	1.0071	-9 450	16 951	63 029	-157 287			
PROPANE DEASPHALTING	1.0760	537 768	19 118	13 484	93 680			
HYDROTREATING NAPHTHA [3]	0.8017	130 588	3 849	22 623	4 191			
GAS OIL	0.9042	147 369	5 688	24 071	37 163			
CAT REFORMING (90 RON)	0.8017	759 784	14 113	67 868	107 775			
CAT CRACKING FCC (4 & 5)	0.9340	422 627	17 621	106 800	33 406			
TCC	0.9340	471 539	17 621	87 382	-33 406			
HYDROCRACKING [6]	0.9340	326 083	16 520	77 673	30 837			
CAT POLYMERIZATION	0.5859	0	12 289	99 052	655 404			
SULFUR PLANT (1.0 TONNE S)		999 295	0	285 638	-2 352 000	-1 067 067	-1 070	-1 070
MEA UNIT (1.0 TONNE S)		0	79 200	79 344	3 528 000			
H_2 PLANT (1000 SCF) (7 & 8)		4 038	2 182	269 331	45 825			

(1) OCA BC IO(; PG)

(2) ON COKE BURNING

(3) OCIATED CAT REFORMER

(4) NO CREDIT FOR LETDO

(5) ' FOR CO BOILER WA

(6)

(7)

(8) G

0 = 579 CA - SA

KG - SA

TABLE AP-E.5 - TYPICAL ENERGY USAGE

PER 1.0 BBL CAPACITY EXCEPT AS NOTED

UNIT	REF HDBK 1990*	TYPICAL °API	FUEL FIRED BTU	18 °F ΔT CW US GAL	POWER KWH	STEAM LB
CRUDE DISTILLATION	TECHNIP LO 4TWR	34.0	40 000	68	1.10	6.0
	* TECHNIP HI 4TWR	34.0	60 000	90	1.50	12.0
	H PROC JULY '82 Hy	25.0	60 000	540	0.24	8.0
	H PROC JULY '82 Lt	40.0	79 920	720	0.31	6.0
	GDANSK	32.0	20	0.60	24.0	
CRUDE/VAC DISTILLATION	FW LO RANGE	8.7	80 000	20	0.60	24.0
	* FW HI RANGE	8.7	120 000			
	PLOCK LO RANGE 1&2	32.5				
	PLOCK HI RANGE 3&4	32.5				
VAC DISTILLATION	* SHELL - LUBES	22.0	590	0.36	30.0	
	H PROC JULY '82	16.0	50 400			
	GDANSK	20.0				
VAC FLASHER						
LT ENDS FRACT'N (USE)						
LPG		130.0	260	0.30	40.0	
NAPHTHA SPLITTING		50.0	450	0.30	70.0	
H'TREATING - NAPHTHAS	H PROC JULY '82	45.0	66 000	216	1.20	16.8
	GDANSK	45.0				
H'TREATING - GAS OILS	H PROC JULY '82	25.0	84 000	360	1.44	16.8
	PLOCK	26.0				
	GDANSK	26.0				
H'TREATING - RESID	* IFP - RESID	15.0	52 500	285	8.50	74.0
	* CHEVRON					
REFORMING	* CHEVRON + HT	48.0	285 000	160	0.70	-40.0
	* ENGELHARD-100 RON	48.0	250 000	40	2.00	-12.5
	* IFP-100 RON	48.0	65 000		1.00	43.2
	H PROC JULY '82	45.0	384 000	792	3.60	
	PLOCK + HT (AVG)	48.0				
	GDANSK	45.0				

TABLE AP-E.6 - TYPICAL REFINERY UTILITY USAGE

****

PER 1.0 BBL CAPACITY EXCEPT AS NOTED

UNIT	REF HDBK 1990*	TYPICAL °API	FUEL FIRED BTU	18 °F ΔT CW US GAL	POWER KWH	STEAM LB
FCCU	MW KELLOGG	20.0	229 646	0	0.90	-100.0
	H PROC JULY '82	20.0	248 846	1 152	6.60	15.6
	PLOCK I	20.0				
	PLOCK II	20.0				
TCCU	H PROC JULY '82	20.0	277 646	1 152	5.40	-15.6
ALKYLATION - PRODUCT	STRATCO H_2SO_4	50.0		2 050	13.50	180.0
	PLOCK	50.0				
OLIGOMERIZATION - PRODUCT	MOBIL/BADGER	50.0		150	10.00	
	IFP	50.0		1 315	1.90	54.0
CAT POLYMERIZATION	H PROC JULY'82	110.0		504	3.84	192.0
PROPANE DEASPHALTING	IFP	12.0	23 750		1.40	7.0
	KERR-McGEE	12.0	95 000	0	2.00	12.0
	* FW LUBE	12.0	89 000	0	2.00	60.0
	H PROC JULY '82	9.0	364 800	1 440	0.96	50.4
LUBES - PDA	FW LUBE	12.0	86 000	415	2.10	115.0
	SHELL	12.0				
	GDANSK	15.0				
- FURFURAL/NMP	SHELL	25.0				
	* EXXON NMP - 103 VI	25.0	202 000	200	1.40	54.3
	PLOCK	25.0				
	GDANSK	25.0				
- DEWAXING	SHELL MEK	27.0				
	PLOCK ACETONE/BENZ	27.0				
	GDANSK DI-ME	27.0				
- H'FINISHING	SHELL	27.0				
	PLOCK	27.0				
	GDANSK	27.0				
GREASE - PER TONNE	STRATCO					

TABLE AP-E.7 - TYPICAL REFINERY UTILITY USAGE

****

PER 1.0 BBL CAPACITY EXCEPT AS NOTED

UNIT	REF HDBK 1990*	TYPICAL °API	FUEL FIRED BTU	18 °F ΔT CW US GAL	POWER KWH	STEAM LB
H'CRACKING	* LUMMUS/OXY/AMOCO	12.4 - 783 SCF H_2	56 100	64	8.40	-35.5
		4.7 - 1 720 SCF H_2	69 800	164	16.50	-97.0
	* CHEVRON	23.0	143 000	330	7.00	-50.0
	* IFP	21.5	40 000		2.80	12.5
	* LINDE	21.5	50 000	190	1.50	
	* UNOCAL/UOP	8.4	135 000		10.00	
	H PROC JULY '82	20.0	192 000	1 080	4.80	14.4
THERMAL CRACKER	H PROC JULY '82	20.0	48 000	1 152	5.40	-15.6
VISBREAKING	* LUMMUS - 356'FFEED	8.2	75 000	270	0.50	45.0
	* IFP	15.0	22 800	0	1.90	10.6
	H PROC JULY '82	9.0	192 000	346	0.36	30.0
COKING	* LUMMUS - DELAYED	7.4	145 000	180	3.90	20.0
	* EXXON - FLEXI	3.1		400	13.00	-100.0
	* FW	2.6	120 000	36	3.60	-40.0
	H PROC JULY '82 DE	9.0	218 880	1 195	1.20	34.8
	H PROC JULY '82 FL	9.0	-6 000	1 195	4.20	-79.2
COKE CALCINING-PER TONNE	* GKT - W GERMANY					
ASPHALT BLOWING	* SNAM - 80/100 PEN	5.9	89 335		0.81	6.57
	40/50 PEN	5.1	57 659		2.73	30.75
	PLOCK	8.0				
	GDANSK	8.0				
MTBE - PRODUCT	* CD TECH	45.4		1 360	1.00	296.0
	* PHILLIPS	45.4		1 870	1.10	224.0
MEA UNIT (1.0 TONNE S)	* H PROC JULY '82			31 680	30.00	10 080.0
	GDANSK					
SULFUR PLANT (1.0 TONNE S)	* H PROC JULY '82		3 600 000		108.00	-6 720.0
	PLOCK					
	GDANSK					
H_2 PLANT (1000 SCF) (6 & 7)			480	29	3.36	-4.3

TABLE AP-E.8 - TYPICAL REFINERY UTILITY USAGE

****

PER 1.0 TONNE CAPACITY EXCEPT AS NOTED

UNIT	REF HDBK 1990*	TYPICAL SP GR	FUEL FIRED KCAL	10 °C ΔT CW M3	POWER KWH	STEAM LB
CRUDE DISTILLATION	TECHNIP LO 4TWR	0.8550	74 212	1.9	8.10	20.1
	TECHNIP HI 4TWR	0.8550	111 317	2.5	11.05	40.1
	H PROC JULY '82 Hy	0.9042	105 264	14.2	1.67	25.3
	H PROC JULY '82 Lt	0.8251	153 650	20.8	2.38	20.8
	GDANSK	0.8654	153 000	0.4	5.00	40.2
CRUDE/VAC DISTILLATION	FW LO RANGE	1.0093	125 734	0.5	3.74	67.9
	* FW HI RANGE	1.0093	188 601	0.5	3.74	67.9
	PLOCK LO RANGE 1 & 2	0.8628	180 380	8	4.80	56.0
	PLOCK HI RANGE 3 & 4	0.8628	205 580	8	8.20	139.0
VAC DISTILLATION	* SHELL - LUBES	0.9218	174 000	14.2	3.40	131.0
	H PROC JULY '82	0.9593	83 337	14.6	2.36	89.4
	GDANSK	0.9340	122 000	9.7	6.90	138.0
VAC FLASHER		0.0000	0			
LT ENDS FRACT'N (USE)						
LPG		0.5411	0	11.4	3.49	211.2
NAPHTHA SPLITTING		0.7796	0	13.7	2.42	256.5
HYDROTREATING - NAPHTHAS	H PROC JULY '82	0.8017	130 588	6.4	9.43	59.9
	GDANSK	0.8017	178 000	1.3	12.60	4.8
- GAS OILS	H PROC JULY '82	0.9042	147 369	9.5	10.03	53.1
	PLOCK	0.8984	61 000	14.0	14.00	55.6
	GDANSK	0.8984	131 000	1.4	2.40	3.1
- RESID	* IFP - RESID	0.9659	86 221	7.0	55.42	218.9
	* CHEVRON	0.0000	0	0.0	0.00	0.0
REFORMING	* CHEVRON + HT	0.7883	573 487	4.8	5.59	-145.0
	* ENGELHARD-100 RON	0.7883	503 058	1.2	15.98	0.0
	* IFP - 102 RON	0.7883	130 795	0.0	7.99	-45.3
	H PROC JULY '82	0.8017	759 784	23.5	28.28	154.0
	PLOSK + HT (AVG)	0.7883	760 000	15.0	42.00	138.8
	GDANSK	0.8071	657 000	5.7	7.80	521.2

TABLE AP-E.9

PER 1.0 TO E CAPACITY EXC AS D

UNIT	REF HDBK 1990*	TYPICAL SP GR	FUEL FIRED KCAL	10 °C ΔT CW M3	POWER KWH	STEAM LB
FCCU	MW KELLOGG	0.9340	390 019	0.0	6.07	-305.9
	H PROC JULY '82	0.9340	422 627	29.4	44.50	47.7
	PLOCK I	0.9340	601 930	32.0	62.00	55.6
	PLOCK II	0.9340	808 770	17.0	28.00	47.1
TCCU	H PROC JULY '82	0.9340	471 539	29.4	36.41	-47.7
ALKYLATION - PRODUCT	STRATCO H_2SO_4	0.7796	0	62.6	109.05	659.7
	PLOCK	0.7796	385 680	116.0	41.00	130.0
OLIGOMERIZATION - PRODUCT	MOBIL/BADGER	0.7796	0	4.6	80.78	0.0
	IFP	0.7796	0	40.2	15.35	197.9
CAT POLYMERIZATION	H PROC JULY'82	0.5859	0	20.5	41.27	936.3
PROPANE DEASPHALTING	IFP	0.9861	38 206	0.0	8.94	20.3
	KERR-McGEE	0.9861	152 823	0.0	12.77	34.8
	* FW LUBE	0.9861	143 171	0.0	12.77	173.9
	H PROC JULY '82	1.0071	574 573	34.0	6.00	143.0
LUBES - PDA	FW LUBE	0.9861	138 345	10.0	13.41	333.2
	SHELL	0.9861	550 000	26.3	10.90	268.0
	GDANSK	0.9659	298 600	9.5	31.60	147.0
- FURFURAL/NMP	SHELL	0.9042	414 000	27.9	9.90	137.0
	* EXXON NMP - 103 VI	0.9042	354 389	5.3	9.75	171.6
	PLOCK	0.9042	453 860	30.0	20.00	333.3
	GDANSK	0.9042	281 500	8.0	3.13	134.8
- DEWAXING	SHELL MEK	0.8927	440	36.1	27.40	1 233.0
	PLOCK ACETONE/BENZ	0.8927	0	49.0	110.00	1 463.0
	GDANSK DI-ME	0.8927	0	19.4	35.13	1 593.7
- H'FINISHING	SHELL	0.8927	150 000	4.1	9.20	106.0
	PLOCK	0.8927	152 400	25.0	8.50	148.1
	GDANSK	0.8927	150 000	11.1	3.95	141.0
GREASE - PER TONNE	STRATCO	0.0000	545 000	660.0	81.50	0.0

629

TABLE AP-E.10 - TYPICAL REFINERY UTILITY USAGE

****

PER 1.0 TONNE CAPACITY EXCEPT AS NOTED

UNIT	REF HDBK 1990*	TYPICAL SP GR	FUEL FIRED KCAL	10 °C ΔT CWM3	POWER KWH	STEAM LB
H'CRACKING	* LUMMUS/OXY/AMOCO	0.9833	90 498	1.6	53.80	-103.2
		1.0389	106 573	3.8	100.02	-266.8
	* CHEVRON	0.9159	247 673	8.6	48.13	-156.0
	* IFP	0.9248	68 607	0.0	19.07	38.6
	* LINDE	0.9248	85 758	4.9	10.21	0.0
	* UNOCAL/UOP	1.0114	211 722	0.0	62.26	0.0
	H PROC JULY '82	0.9340	326 083	27.5	32.36	44.1
THERMAL CRACKER	H PROC JULY '82	0.9340	81 521	29.4	36.41	-47.7
VISBREAKING	* LUMMUS - 356'FFEED	1.0129	117 456	6.3	3.11	126.9
	* IFP	0.9659	37 444	0.0	12.39	31.4
	H PROC JULY '82	1.0071	302 407	8.2	2.25	85.1
COKING	* LUMMUS - DELAYED	1.0187	225 779	4.2	24.11	56.1
	* EXXON - FLEXI	1.0513	0	9.1	77.87	-271.8
	* FW	1.0552	180 395	0.8	21.49	-108.3
	H PROC JULY '82 DE	1.0071	344 744	28.3	7.50	98.7
	H PROC JULY '82 FL	1.0071	-9 450	28.3	26.26	-224.7
COKE CALCINING-PER TONNE	* GKT - W GERMANY	0.0000	270 000	0.0	54.00	1 950.0
ASPHALT BLOWING	* SNAM - 80/100 PEN	1.0300	55 000	0.0	4.00	20.0
	40/50 PEN	1.0360	65 000	0.0	10.00	20.0
	PLOCK	1.0143	139 700	0.0	5.00	18.5
	GDANSK	1.0143	90 165	0.0	16.95	86.6
MTBE - PRODUCT	* CD TECH	0.7999	0	55.4	7.87	1 057.3
	* PHILLIPS	0.7999	0	55.7	8.66	800.1
MEA UNIT (1.0 TONNE S)	* H PROC JULY '82	0.0000	0	132.0	33.06	5 040.0
	GDANSK	0.0000	0	0.0	0.00	6 292.0
SULFUR PLANT (1.0 TONNE S)	* H PROC JULY '82	0.0000	999 295	0.0	119.02	-3 360.0
	PLOCK	0.0000	1 397 000	0.0	68.00	-5 181.0
	GDANSK	0.0000	33	35.0	11.90	-1 075.0
H_2 PLANT (1000 NM3) (6 & 7)		0.0000	4 038	4.1	112.22	65.5

TA TYPICA E

) TONNE CAPA TY EX AS D

UNIT	REF HDBK 1990*	TYPICAL SP GR	FUEL FIRED KCAL	10 °C ΔT CW KCAL	POWER KCAL	STEAM KCAL	TOTAL ENERGY KCAL/T	SAY USE TOTAL ENERGY M KCAL/T	SAY USE TOTAL ENERGY MBTU/Bbl
CRUDE DISTILLATION	TECHNIP LO 4TWR	0.8550	74 212	1 136	19 445	14 038	108 829	110	58.7
	TECHNIP HI 4TWR	0.8550	111 317	1 504	26 516	28 072	167 409	170	90.2
	H PROC JULY '82 Hy	0.9042	105 264	8 532	4 012	17 697	135 505	135	77.0
	H PROC JULY '82 Lt	0.8251	153 650	12 467	5 715	14 545	186 377	185	96.9
	GDANSK	0.8654	153 000	240	12 000	28 140	193 380	195	105.5
CRUDE/VAC DISTILLATION	FW LO RANGE	1.0093	125 734	283	8 985	47 561	182 563	185	116.2
	* FW HI RANGE	1.0093	188 601	283	8 985	47 561	245 430	245	156.2
	PLOCK LO RANGE 1 & 2	0.8628	180 380	4 800	11 520	39 200	235 900	235	128.3
	PLOCK HI RANGE 3 & 4	0.8628	205 580	4 500	19 680	97 300	327 060	325	177.9
VAC DISTILLATION	* SHELL - LUBES	0.9218	174 000	5 520	8 160	91 700	282 380	280	164.1
	H PROC JULY '82	0.9593	83 337	8 786	5 672	62 547	160 341	160	97.0
	GDANSK	0.9340	122 000	5 820	16 580	96 600	240 980	240	141.9
VAC FLASHER		0.0000	0	0	0	0	0		
LT ENDS FRACT'N (USE)		0.0000	0	0	0	0	0		
LPG		0.5411	0	6 864	8 379	147 850	163 094	165	55.6
NAPHTHA SPLITTING		0.7796	0	8 246	5 816	179 583	193 645	195	95.2
HYDROTREATING - NAPHTHAS	H PROC JULY '82	0.8017	130 588	3 849	22 623	41 913	198 972	200	100.6
	GDANSK	0.8017	178 000	780	30 240	3 360	212 380	210	107.3
- GAS OILS	H PROC JULY '82	0.9042	147 369	5 688	24 071	37 163	214 292	215	122.1
	PLOCK	0.8984	61 000	8 400	33 600	38 920	141 920	140	80.4
	GDANSK	0.8984	131 000	840	5 760	2 170	139 770	140	79.2
- RESID	* IFP - RESID	0.9659	86 221	4 215	133 006	153 236	376 678	375	229.4
	* CHEVRON	0.0000	0	0	0	0	0		
REFORMING	* CHEVRON + HT	0.7883	573 487	2 900	13 421	-101 488	488 319	490	242.7
	* ENGELHARD-100 RON	0.7883	503 058	725	38 345	0	542 128	540	269.4
	* IFP - 102 RON	0.7883	130 795	0	19 173	-31 715	118 253	120	58.8
	H PROC JULY '82	0.8017	759 784	14 113	67 868	107 775	949 540	950	479.9
	PLOSK + HT (AVG)	0.7883	760 000	9 000	100 800	97 160	966 960	965	480.6
	GDANSK	0.8071	657 000	3 420	18 720	364 840	1 043 980	1 045	527.7

TABLE AP-E.12 - TYPICAL REFINERY UTILITY USAGE

****

PER 1.0 TONNE CAPACITY EXCEPT AS NOTED

UNIT	REF HDBK 1990*	TYPICAL SP GR	FUEL FIRED KCAL	10 °C ΔT CW KCAL	POWER KCAL	STEAM KCAL	TOTAL ENERGY KCAL/T	SAY USE TOTAL ENERGY M KCAL/T	SAY USE TOTAL ENERGY MBTU/Bbl
FCCU	MW KELLOGG	0.9340	390 019	0	14 564	-214 143	190 404	190	112.1
	H PROC JULY '82	0.9340	422 627	17 621	106 800	33 406	580 454	580	341.8
	PLOCK I	0.9340	601 930	19 200	148 800	38 920	808 850	810	476.3
	PLOCK II	0.9340	808 770	10 200	67 200	51 870	938 040	940	552.3
TCCU	H PROC JULY '82	0.9340	471 539	17 621	87 382	-33 406	543 136	545	319.8
ALKYLATION - PRODUCT	STRATCO H_2SO_4	0.7796	0	37 566	261 713	461 785	761 064	760	374.1
	PLOCK	0.7796	385 680	69 600	98 400	91 000	644 680	645	316.9
OLIGOMERIZATION - PRODUCT	MOBIL/BADGER	0.7796	0	2 749	193 862	0	196 611	195	96.6
	IFP	0.7796	0	24 097	36 834	138 536	199 466	200	98.0
CAT POLYMERIZATION	H PROC JULY '82	0.5859	0	12 289	99 052	655 404	766 745	765	283.2
PROPANE DEASPHALTING	IFP	0.9861	38 206	0	21 458	14 198	73 863	75	45.9
	KERR-McGEE	0.9861	152 823	0	30 655	24 340	207 818	210	129.2
	* FW CRACKED	0.9861	143 171	0	30 655	121 701	295 527	295	183.7
	H PROC JULY '82	1.0071	574 573	20 427	14 407	100 092	709 498	710	450.5
LUBES - PDA	FW LUBE	0.9861	138 345	6 013	32 187	233 260	409 806	410	254.8
	SHELL	0.9861	550 000	15 780	26 160	187 600	779 540	780	484.6
	GDANSK	0.9659	298 600	5 700	75 840	102 900	483 040	485	294.1
-FURFURAL/NMP	SHELL	0.9042	414 000	16 740	23 760	95 900	550 400	550	313.7
	* EXXON NMP - 103 VI	0.9042	354 389	3 160	23 402	120 117	501 068	500	285.6
	PLOCK	0.9042	453 860	18 000	48 000	233 310	753 170	755	429.3
	GDANSK	0.9042	281 600	4 782	7 512	94 360	388 154	390	221.3
- DEWAXING	SHELL MEK	0.8927	440	21 660	65 760	863 100	950 960	950	535.2
	PLOCK ACETONE/BENZ	0.8927	0	29 400	264 000	1 024 100	1 317 500	1 320	741.5
	GDANSK DI-ME	0.8927	0	11 622	84 312	1 115 590	1 211 524	1 210	681.9
- HYDROFINISHING	SHELL	0.8927	150 000	2 460	22 080	74 200	248 740	250	140.0
	PLOCK	0.8927	152 400	15 000	20 400	103 670	291 470	290	[illegible]4.0
	GDANSK	0.8927	150 000	6 654	9 480	98 700	264 834	260	[illegible].1
GREASE - PER TONNE	STRATCO	0.0000	545 000	396 000	195 600	0	1 136 600	1 135	

TABLE AP-E.13 - TYPICAL RE UTILITY USAGE

PER 1.0 TONNE CAPACITY EXCEPT AS NOTED

UNIT	REF HDBK 1990*	TYPICAL SP GR	FUEL FIRED KCAL	10 °C ΔT CW KCAL	POWER KCAL	STEAM KCAL	TOTAL ENERGY KCAL/T	SAY USE TOTAL ENERGY M KCAL/T	SAY USE TOTAL ENERGY MBTU/Bbl
HYDROCRACKING	* LUMMUS/OXY/AMOCO	0.9833	90 498	933	129 109	-72 207	148 332	150	92.0
		1.0389	106 573	2 255	240 036	-186 741	162 123	160	106.2
	* CHEVRON	0.9159	247 673	5 148	115 516	-109 192	259 145	260	149.6
	* IFP	0.9248	68 607	0	45 758	27 033	141 397	140	82.4
	* LINDE	0.9248	85 758	2 935	24 513	0	113 206	115	66.0
	* UNOCAL/UOP	1.0114	211 722	0	149 428	0	361 150	360	230.3
	H PROC JULY '82	0.9340	326 083	16 520	77 673	30 837	451 112	450	265.6
THERMAL CRACKER	H PROC JULY '82	0.9340	81 521	17 621	87 382	-33 406	153 117	155	90.2
VISBREAKING	* LUMMUS - 356'FFEED	0.0129	117 455	3 808	7 461	88 859	217 583	220	138.9
	* IFP	0.9659	37 444	0	29 731	21 950	89 125	90	54.3
	H PROC JULY '82	1.0071	302 407	4 908	5 402	59 578	372 286	370	236.4
COKING	* LUMMUS - DELAYED	1.0187	225 779	2 524	57 861	39 267	325 431	325	209.0
	* EXXON - FLEXI	1.0513	0	5 436	186 898	-190 255	2 079	2	1.4
	* FW	1.0552	180 395	487	51 564	-75 819	156 627	155	104.2
	H PROC JULY '82 DE	1.0071	344 744	16 951	18 008	69 111	448 814	450	285.0
	H PROC JULY '82 FL	1.0071	-9 450	16 951	63 029	-157 287	-86 757	-85	-55.1
COKE CALCINING - PER TONNE	* GKT - W GERMANY	0.0000	270 000	0	129 600	1 365 000	1 764 600	1 765	
ASPHALT BLOWING	* SNAM - 80/100 PEN	1.0300	55 000	0	9 600	14 000	78 600	80	51.0
	40/50 PEN	1.0360	65 000	0	24 000	14 000	103 000	105	67.3
	PLOCK	1.0143	139 700	0	12 000	12 950	164 650	165	105.3
	GDANSK	1.0143	90 165	0	40 682	60 634	191 481	190	122.4
MTBE - PRODUCT	CD TECH	0.7999	0	33 220	18 895	740 134	792 249	790	399.5
	* PHILLIPS	0.7999	0	33 399	20 784	560 102	614 285	615	309.8
MEA UNIT (1.0 TONNE S)	H PROC JULY '82	0.0000	0	79 200	79 344	3 528 000	3 686 544	3 685	-
	GDANSK	0.0000	0	0	0	4 404 400	4 404 400	4 405	-
SULFUR PLANT (1.0 TONNE S)	H PROC JULY '82	0.0000	999 295	0	285 638	-2 352 000	-1 067 067	-1 070	-
	PLOCK	0.0000	1 397 000	0	163 200	-3 626 700	-2 066 500	-2 065	-
	GDANSK	0.0000	33	21 000	28 560	-752 500	-702 907	-705	-
H2 PLANT (1000 NM3) (6&7)		0.0000	4 038	2 438	269 331	45 825	321 633	320	-

TABLE AP-E.14 - TYPICAL REFINERY UTILITY USAGE

****

COMPARISON OF TYPICAL REFINERY UNIT TOTAL ENERGY REQUIREMENTS
AGAINST A REASONABLY EFFICIENT 80 000 EPSD USA FUELS REFINERY
(ENERGY REQUIREMENT = 380 000 BTU/BBL CRUDE FEED)

REF: PELHAM & MORIARTY, PROFIMATICS INC, HYDROCARBON PROCESSING, JULY 1985 Pg 51 - TABLE 1

UNIT	CAPACITY BPSD	TOTAL ENERGY DEMAND Btu/BbL	CALC'D TOTAL ENERGY DEMAND M Btu/D	REPORTED TOTAL ENERGY DEMAND M Btu/D	TOTAL ENERGY DEMAND %
CRUDE/VAC UNIT	80 000	133 700	10 696.0		247 592.6
LT ENDS FRACTINATION	1 000	56 300	56.3		1 303.2
NAPHTHA HDS	16 000	101 100	1 617.6		37 444.4
CATALYTIC REFORMER	16 000	480 200	7 683.2		177 851.9
ALKYLATION UNIT	5 500	368 600	2 027.3		46 928.2
FCC UNIT	24 000	341 500	8 196.0		189 722.2
TOTAL PROCESS UNITS		378 455	30 276.4		700 842.6
TOTAL REFINERY PREDICTED		378 455	30 276.4		
TOTAL REFINERY REPORTED	80 000	380 000		30 400.0	
TOTAL CRUDE FEED @ 6.0 MM BTU/BbL			480 000.0	480 000	
ENERGY EFFICIENCY - % ON CRUDE			6.31	6.33	

NOTE: THE CLOSE CORRESPONDENCE OF THESE RESULTS APPEARS TO JUSTIFY THE GENERAL VALIDITY OF THE "TOTAL ENERGY DEMAND" FACTORS IN REPRESENTING REASONABLE ENERGY EFFICIENCIES IN A MODERN REFINERY CONTEXT.

HOWEVER, IT SHOULD NOT BE OVERLOOKED THAT THE CONCLUSIONS OF THIS PAPER WITH THERMODYNAMIC AND PROTOCOL CONSIDERATIONS OF REFINERY ENERGY LOSSES WAS TO SUGGEST THAT GIVEN THE CURRENT REFINERY CONFIGURATIONS AND TECHNOLOGIES, CONCEIVABLE FURTHER IMPROVEMENTS COULD APPROXIMATE 23 PERCENT.

TABLE AP-E.15
USA
TYPICAL REFINERY UTILITY USAGE

****

SELECTED SPECIFIC ENERGY DEMANDS

UNIT	BASIS FEED/PRODUCT	FEEDSTOCK		SPECIFIC ENERGY DEMAND KCAL/T	SPECIFIC ENERGY DEMAND BTU/BBL
		°API	Sp Gr		
DISTILLATION				*10^3	*10^3
ATMOSPHERIC	FEED	25.0	0.9042	135	77.0
ATMOSPHERIC	FEED	40.0	0.8251	185	96.2
ATMOSPHERIC/ VACUUM LUBES	FEED	32.0	0.8654	305	166.4
ATMOSPHERIC/ VACUUM FLASH	FEED	32.0	0.8654	245	133.7
VACUUM - FUELS	FEED	16.0	0.9593	160	96.8
LPG	FEED	130.0	0.5411	165	56.3
NAPHTHA SPLITTING	FEED	50.0	0.7798	195	95.8
FCC GAS PLANT	FEED		0.0000		
CRACKING:					
FCC	FEED	20.0	0.9340	580	341.5
TCC	FEED	20.0	0.9340	545	320.9
VISBREAKING	FEED	9.0	1.0071	350	222.2
DELAYED COKING	FEED	9.0	1.0071	450	285.7
FLUID COKING	FEED	9.0	1.0071	-85	-54.0
FLEXI COKING	FEED		0.0000		
HYDROTREATING:					
NAPHTHA	FEED	45.0	0.8017	200	101.1
GAS OIL	FEED	25.0	0.9042	215	122.6
RESID	FEED		0.0000		
HYDROCRACKING:					
GAS OILS	FEED	20.0	0.9340	400	235.5
RESID	FEED		0.0000		

TABLE AP-E.15 - continued

USA

TYPICAL REFINERY UNIT ENERGY USAGE

SELECTED SPECIFIC ENERGY DEMANDS

UNIT	BASIS FEED/PRODUCT	FEEDSTOCK		SPECIFIC ENERGY DEMAND KCAL/T	SPECIFIC ENERGY DEMAND BTU/BBL
		°API	Sp Gr		
LUBES					
VACUUM - LUBES	FEED	22.0	0.9218	750	466.2
PDA - LUBES	FEED	12.0	0.9861	250	145.3
FURFURAL/NMP	FEED	25.0	0.9042	525	299.3
DEWAXING - MEK/DI-ME	FEED	27.0	0.8927	950	534.7
H-FINISHING	FEED	27.0	0.8927	200	112.6
BLENDING	PRODUCT	27.0	0.8927	30	16.9
REFORMING	FEED	45.0	0.8017	950	480.2
TREATING					
MEROX	FEED	35.0	0.8498	20	10.7
PDA - FUELS	PRODUCT	9.0	1.0071	250	158.7
AMINE	PRODUCT		PER TONNE	3 650	3 650.0
SULFUR PLANT	PRODUCT		PER TONNE	-1 000	-1 000.0
HYDROGEN PLANT	PRODUCT		1 000 NM3	320	320.0
GENERAL					
ALKYLATION	PRODUCT	50.0	0.7796	750	368.6
POLYMERIZATION	FEED	110.0	0.5859	750	277.0
OLIGOMERIZATION	PRODUCT	50.0	0.7796	200	98.3
MTBE	PRODUCT	45.0	0.8017	700	353.8
GREASE	PRODUCT		PER TONNE	1 150	1 150.0
COKE CALCINING	PRODUCT		PER TONNE	1 750	1 750.0
ASPHALT BLOWING	FEED		PER TONNE	100	100.0
BLENDING - FUELS	FEED	35.0	0.8498	20	10.7

APPENDIX F

OPERATING COSTS

PAVLODAR REFINERY - KAZAKHSTAN
OPERATING COSTS PLANNED FOR 4TH QUARTER 1993

	QUANTITY	PRICE	1 000 RUBLES/QUARTER	AMOUNT 1 000 RUBLES/MONTH	RUBLES/TON
INPUTS					
Crude Oil	1 700 000	77 414.00	131 603 827	43 867 942	77 414
Expenses			26 767 259	8 922 420	15 745
Total			158 371 086	52 790 362	93 159
PRODUCTS					
Fuel Gas	29 070	86 139.20	2 504 066	834 689	1 473
C3/Propylene	6 718	93 280.24	626 657	208 886	369
C4/Product	17 013	112 738.94	1 918 028	639 343	1 128
Gasoline 76	479 102	107 684.73	51 591 984	17 197 328	30 348
Kerosene	138 776	102 938.83	14 285 436	4 761 812	8 403
Diesel	473 334	99 212.64	46 960 719	15 653 573	27 624
Heating Oil	36 595	115 958.94	4 243 519	1 414 506	2 496
Mazut	327 789	68 033.70	22 300 706	7 433 569	13 118
Bitumen Do	29 115	80 001.32	2 329 238	776 413	1 370
Bitumen Ct	9 500	103 395.66	982 259	327 420	578
Bitumen Kp	9 500	80 003.06	760 029	253 343	447
Sulfur	1 676	316 247.60	530 031	176 677	312
Coke	7 678	341 274.74	2 620 307	873 436	1 541
Coke Fines	11 519	50 367.17	580 179	193 393	341
	1 577 385		152 233 158	50 744 386	89 549
OPERATING COSTS					
Raw Materials			131 603 827	43 867 942	77 414

628

Catalyst/Chemicals			76 104	25 368	45
Utilities					
Power			2 199 355	733 118	1 294
Steam			2 448 644	816 215	1 440
Air			129 857	43 286	76
Cooling Water			201 714	67 238	119
Waste Water			119 807	39 936	70
Steam Return			(518 075)	(172 692)	(305)
Inert Gas			41 645	13 882	24
Fuel			5 734 891	1 911 630	3 373
Gas			90 833	30 278	53
Regeheratzya			110 175	36 725	65
Ytnl teppa			162 174	54 058	95
Oy.lwm.gas			247	82	0
Wages			525 308	175 103	309
Social Insurance			194 364	64 788	114
Maintenance			2 811 688	937 229	1 654
Depreciation			49 169	16 390	29
Current Repairs			1 354 481	451 494	797
Capital Investment			1 160 428	386 809	683
			1 030 779	343 593	606
Shop Expenses			178 740	59 580	105
Total Refinery			8 664 929	2 888 310	5 097

PAV Y -
OPERATING COSTS PLA D FO C ER 1993

TOTAL			158 371 086	52 790 362	93 159
	Percent				
Allowable Profit	20		31 674 217	10 558 072	18 632
Tax on Profit	25		7 918 554	2 639 518	4 658
Investment and develop	35		11 085 976	3 695 325	6 521
Social Benefits	25		7 918 554	2 639 518	4 658
Wages	15		4 751 133	1 583 711	2 795
	100		31 674 217	10 5[illegible]	18[illegible]2

640

SHYMKENT REFINERY - OPERATING COSTS
NOVEMBER 1993 PLANNED FIGURES

ITEM	UNITS	QUANTITY	PRICE	COST 1 000 RUBLES/MONTH	RUBLES/TON	PERCENT
FEEDSTOCK						
Crude Oil	1 000 MT	580.00	53 436.74	30 993 309		
Losses	1 000 MT	4.09	53 436.74	218 556		
	1 000 MT	575.91		30 774 753	53 436.74	76.2%
OTHER RAW MATERIALS						
Catalyst and Chemicals				111 669		
Other Materials				2 000		
				113 669	2 193.90	0.3%
ENERGY COSTS						
Electric Energy	R/KWH	12 999	24.6	319 781		
Base Charge		23 300		69 900		
Thermal Power						
Steam 40 bar	R/Gcal	21 300	23 345	497 249		
Steam 16 bar	R/Gcal	14 434	21 020	303 403		
Hot Water	R/Gcal	2 052	19 460	39 932		
					2 136.21	2.1%
UTILITIES						
Demineralized Water	R/T	28 000	2 443.46	68 417		
Condensate	R/T	37 799	2 443.46	92 360		
Fresh Water	R/M³	316.5	206.75	65 436		
Industrial Water	R/M³	26.6	32.00	851		
					394.27	0.6%

ITEM	UNITS	QUANTITY	PRICE	COST 1 000 RUBLES/MONTH	RUBLES/TON	PERCENT
OTHER						
Wages				43 575		
Social Insurance				16 123		
Employment Fund				1 014		
Maintenance				287 933		
Safety and Protection				7 400		
Uniforms, etc.				206		
Highway Tax				370 566		
Depreciation				27 031		
Other Expenses				9 116		
Investment Fund				1 655 436		
Production Cost				34 764 150	60 363.86	86.0%
	Percent					
Allowable Profit	16			5 649 174	9 809.13	14.0%
Tax on Profit	25			1 412 294		
Investment	35			1 977 211		
Social Benefits	25			1 412 294		
Bonus\Wages	15			847 376		
TOTAL PRODUCTION COST (ex Taxes)				40 413 325	70 172.99	100.0%

629

ATYRAU REFINERY
OPERATING COSTS PLANNED FOR 4TH QUARTER 1993

			AMOUNT		
	QUANTITY 1 000 METRIC TONNES	PRICE	1 000 RUBLES QUARTER	1 000 RUBLES/ MONTH	RUBLES/TON
INPUTS					
Crude Oil					
Unit 1	613.4	30 495.00	18 705 633	6 235 211	
Unit 3	764.4	30 495.00	23 310 378	7 770 126	
Expenses			8 764 966	2 921 655	
Total	1 377.8		50 780 977	16 926 992	
PRODUCTS					
Fuel gas					
C3/Propylene	3.3	7 833.00	25 849	8 616	
C4/Product					
Gasoline 93	14.0	76 014.00	1 064 196	354 732	
Gasoline 76	123.7	61 106.01	7 558 813	2 519 604	
White Spirits	17.5	53 970.67	941 788	313 929	
Diesel	392.9	52 749.04	20 725 098	6 908 366	
Heating Oil	63.3	45 833.00	2 901 229	967 076	
Vacuum Distillate	99.0	27 440.00	2 716 560	905 520	

ATYRAU REFINERY
OPERATING COSTS PLANNED FOR 4TH QUARTER 1993

			AMOUNT		
	QUANTITY 1 000 METRIC TONNES	PRICE	1 000 RUBLES QUARTER	1 000 RUBLES/ MONTH	RUBLES/TON
Mazut	564.3	22 400.34	12 640 512	4 213 504	
Sulfur					
Coke	22.7		19 977 913	659 304	
Other			1 128 601	376 200	
Total Products	1 300.6		51 680 559	17 226 853	
Services					
Steam			86 120	28,707	
Power			5 820	1 940	
Water			1 309	436	
TNP					
White Spirits	0.2	964 582.00	144 687	48 229	
Washings?	0.3	705 258.33	211 577	70 526	
Foam Washings?	0.2	254 439.50	50 888	16 963	
Products and Services			52 180 960	17 393 653	
OPERATING COSTS					
Raw Materials					

ATYRAU REFINERY
OPERATING COSTS PLANNED FOR 4TH QUARTER 1993

			AMOUNT		
	QUANTITY 1 000 METRIC TONNES	PRICE	1 000 RUBLES QUARTER	1 000 RUBLES/ MONTH	RUBLES/TON
Feedstocks			42 016 011	14 005 337	
Catalyst/Chemicals			19 833	6 611	
Utilities					
Fuel			622 482	207 494	
Steam			1 133 216	377 739	
Water			401 313	133 771	
Power			695 577	231 859	
Other			48 949	16 316	
Wages			404 598	134 866	
Extra Wages			39 729	13 243	
Social Insurance			164 290	54 763	
Employee's Fund			8 880	2 960	
Transportation Tax			45 588	15 196	
			34 101	11 367	
Maintenance			1 241 387	413 796	
Total Refinery Expenses			910 173	303 391	

USAID\KAZAKSTAN\COSTTBL3

March 7, 1994

ATYRAU REFINERY
OPERATING COSTS PLANNED FOR 4TH QUARTER 1993

			AMOUNT		
	QUANTITY 1 000 METRIC TONNES	PRICE	1 000 RUBLES QUARTER	1 000 RUBLES/ MONTH	RUBLES/TON
Unit Expenses			479 581	159 860	
			2 515 268	838 423	
Total Operating Expenses			8 764 966	2 921 655	
TOTAL PRODUCT COSTS			50 780 977	16 926 992	
	Percent				
Allowable Profit	20		10 156 195	3 385 398	7 371
TAX on Profit	25		2 539 049	846 350	1 843
Investment and Develop	35		3 554 668	1 184 889	2 580
Social Benefits	25		2 539 049	846 350	1 843
Wages	15		1 523 429	507 810	1 106
	100		10 156 195	3 385 398	7 371

USAID\KAZAKSTAN\COSTTBL3

March 7, 1994

696

ATYRAU REFNERY
PLAN FOR 4TH QUARTER 1993

UNIT NUMBER	1		2			3		5		
UNIT NAME	ATMOSPHERIC DISTILLATION		STABILIZER	WHITE SPIRITS,		ATMOSPHERIC DISTILLATION	CATALYTIC REFORMER	DELAYED COKER	CALCINER	TOTAL REFINERY
	DESALTER	FRACTION	THOUSAND RUBLES FOR THE QUARTER							
RAW MATERIALS										
Total Feedstocks										
Losses										
Total Feeds	18 971 549	19 671 178	1 239 748	7 453		23 310 318	4 038 094	467 504	910 159	
Expenses	699 629	1 058 912	197 151	137 235	262 406	2 929 442	1 019 165	1 463 868	597 159	8 764 968
Total	19 671 178	20 730 090	1 436 899	144 687	262 406	26 239 760	5 057 260	1 931 372	1 907 318	
Products										
Main Products	19 405 262	11 711 775	1 397 859			14 756 340	4 855 731	910 159	1 876 762	
Associated Products	265 916	9 015 800	39 040			11 483 480	201 529	5 228 749	30 559	
Total	19 671 178	20 727 575	1 436 899	0	0	26 239 820	5 057 260	6 138 908	1 907 321	
OPERATING COSTS										
Catalyst/Chemicals	5 064	3 546				10 214	137	872		19 833
Utilities										
Fuel						273 508	85 516	197 294	66 164	622 482
Steam	88 603	219 479	79 028	11 105	27 762	364 604	85 136	146 443	131 056	1 133 216
Water	70 566	321 990	2 509	1 884	1 885	1 715	175	512	78	401 313
Power	55 436	113 985	1 077	1 455	2 328	176 404	195 174	92 567	57 152	695 577
Other		11 273		2 147	2 334	9 395		10 021	13 779	48 949
Wages	9 744	21 788	34 993	46 626	80 439	44 233	41 159	72 019	53 597	404 593
Extra Wages	1 113	2 455	4 001	5 181	8 938	5 080	4 727	8 233		39 729

PLAN F[illegible] 4 [illegible]JA[illegible] R 1993

UNIT NUMBER	1		2			3		5		
UNIT NAME	ATMOSPHERIC DISTILLATION		STABILIZER	WHITE SPIRITS		ATMOSPHERIC DISTILLATION	CATALYTIC REFORMER	DELAYED COKER	CALCINER	TOTAL REFINERY
	DESALTER	FRACTION	THOUSAND RUBLES FOR THE QUARTER							
Social Insurance	4 017	8 859	14 428	19 168	33 070	18 246	16 978	28 693	19 631	164 290
Employee's Fund	217	479	780	1 036	1 788	988	918	1 605	1 072	8 880
Transportation Tax	652	652	2 340	22 840	5 363	2 959	2 753	4 815	3 216	45 588
					34 101					34 101
Maintenance	172 001	252 268	11 467	22 434	59 610	91 734	137 601	80 267	414 004	1 241 387
Total Refinery Expenses	302 909	24 815		3 108	4 640	376 591	40 934	98 241	58 936	910 173
Unit Expenses	9 306	77 323	46 528	250	150	49 630	40 324	80 649	175 421	479 581
Other Costs						1 504 143	367 635	640 637	2 854	2 515 268
TOTAL OPERATING COSTS	699 628	1 058 912	197 151	137 235	262 406	2 929 442	1 019 165	1 463 868	997 159	8 764 966

149

APPENDIX G

PROCESS SIMULATION ADVANTAGES

APPENDIX G PROCESS SIMULATION

The general overall benefit of process simulation is that it is the most cost effective approach to process prediction and evaluation. Refiners can evaluate process changes without physically doing it in the plant.

Process simulation can be done on virtually any process. However, the following are common examples.

Tower and flash drums

Distillation towers are probably the most frequent simulated process. Commercial simulation programs such as Simulation Sciences-PROCESS/PRO-II, Chemshare, HYSIM, and Aspen all have elaborate thermodynamic data bases and prediction procedures to yield accurate vapor and liquid separation and therefore, distillation results. Examples of common owner simulation are as follows:

Crude atmospheric and vacuum towers

These simulations can determine the expected yields from various crude blends. These crude change simulations can highlight areas of concern in downstream processing. Many times these simulations not only include pumparounds, but also side steam strippers so detailed product specifications and tower loadings can be accurately checked. With an anticipated crude blend and/or rate change, the refiner can determine:

- Product yields
- Pumparound duty requirements
- Flash zone temperatures
- Column section loadings
- Vacuum system requirements
- Stripping steam requirements (in the main column and side stream strippers)

Since these variables can affect each other, the simulation allows the refiner to recheck and reoptimize all variables simultaneously.

The tower simulation can also be used to evaluate possible cost effective efficiency improvements (even if crude rates and/or blends remain the same). For example, the economics of adding a preflash tower (the preflash tower vessel and main fractionator costs versus energy savings) can be evaluated. Another example is a vacuum tower transfer line redesign and its energy and yield benefits.

Fluid catalytic cracking unit columns

The FCCU main fractionator tower and Vapor Recovery Unit towers: Absorber-Stripper, Depropanizer, etc., are simulated for similar reasons as crude unit towers, but not as often. Pumparound duties are once again important variables in determining absorption & product yields and tower loadings.

Other product separation and stabilization

There are many other refinery columns that frequently can be simulated to determine tower capacity, separation effectiveness, energy improvements, control optimization, etc. These include:

- Lube Oil Vacuum Towers
- Coking Unit Combination Towers
- Naphtha Splitters
- Gasoline, or other product, Stabilizers
- Debutanizers
- Depropanizers
- Deethanizers
- Propane-Propylene Splitters

Many times these columns have stringent separation requirements necessitating high reflux ratios to achieve product specifications. Simulation models can assist in balancing these reflux ratios with condenser duties, reboiler duties, tray/packing loads, intermediate heat removals, and tower hydraulics.

Often, tower pressure drops can markedly affect K-valves. Thus, the tray-by-tray calculations of a tower simulation program not only achieve accurate separation results, but also can be used to predict tower delta P effects.

If these tower simulations show an area of concern (tower loading, product specification, etc.), the refiner can again use the tower simulation program to see:

1) if any adjustment in pumparound duties, tower conditions (pressure and temperature) stripping steam, and/or product yields and specifications can be used to solve the problem

2) how much reduction in capacity would be required to remove the problem(s).

3) the effect of a possible capital addition, such as more pumparound duties, bigger columns, deeper vacuums, and/or a change in tower internals.

Many times refiners see a range of possible tower feeds. The simulation model can be used to evaluate the extremes. Perhaps, the simulation results may highlight ways to improve day-to-day operations. For example, this approach may show the refiners the best tray (the tray with greatest temperature change) to control the tower heat balance (i.e., reboiler duty).

Heat exchange network

Heat exchange network units are prime candidates for frequent simulations to evaluate:

1) the most efficient way to exchange heat between streams in new processes, and;

2) heat integration improvement ideas in existing processes.

Examples of these heat exchange networks are:

- Crude Unit Preheat Trains
- FCCU Main Fraction Pumparound Circuits
- Coking Unit Combination Tower Pumparounds

Simulation Sciences HEXTRAN program and the Linhoff-March Pinch Technology (available in the Aspen simulation program) are used for this purpose.

It is important to note that these heat exchange network simulations should be used along with the main tower simulation until duties, rates, and temperatures are consistent in both models (to accurately evaluate the process).

Many times refiners monitor heat exchange performance with/against network simulations on a regular basis to establish exchanger cleaning schedules and benefits.

Reactor simulations

Simulations to predict reactor yields are being used more often these days. These reactor models include: Hydrotreaters, Cokers, FCCU's, Reformers, Alkylation Units, and Sulfur Plants. Although the catalyst and/or technology companies still provide the expected and guaranteed yields, refiners are seeing the need to evaluate day-to-day changes in feed rate and composition in these reactors to anticipate problems and operate efficiently.

For example, several factors affect the amount of propylene to alkylate, if any. These factors include:

1) The market for chemical-grade and polymer-grade propylene.

2) The propane/propylene yield.

3) The propane/propylene splitter capacity.

An alkylation model would allow the refiner to evaluate the effects before doing it in the field. Another example is the expected FCCU yields from varying amounts of residual cracking.

The Simulation Sciences-PROCESS/PRO-II and Chemshare programs allow users to specify reactors in different ways:

- plug flow and stirred-tank models, with in-line Fortran for the kinetics;
- equilibrium reaction equations and approach to equilibrium relationships, and;
- simpler conversion versus temperature relationships.

Refiners are also using reactor model simulations to more accurately time and justify catalyst change outs.

Piping networks

Piping network simulations are used to determine new and/or evaluate existing system hydraulics. This is especially important when evaluating/designing unit expansions.

It is often wise to use a piping network simulation program along with a heat exchange network for complex preheat trains with multiple parallel paths. Inaccurate pressure designations on streams in heat network programs will produce inaccurate heat network solutions.

Detailed equipment programs

Simulation Sciences-PROCESS/PRO-II, Chemshare, Aspen, and HYSIM programs all have equipment modules that allow users to model: pumps, compressors, heat exchangers, coolers, heaters, drums, etc.

These models afford accurate heat exchange, pressure drop, heat of compression, energy usage, etc., process calculations. One such example is interstage cooling economics for multi-stage compressors. A simulation model can be used to determine the heat exchange, knock out drum, and piping requirements (capital costs) of interstage cooling/separation versus compressor horsepower savings to determine an energy efficient compressor design or revamp.

These equipment modules, however, are not made for detailed mechanical design of equipment. There are many separate detailed equipment design programs that exist. These Rating and/or Design Programs include:

- Tower Trays and/or Packing
- Fired Heaters and Boilers
- Heat Exchangers
- Shell & Tube
- Plate & Frame
- Core
- Air Coolers
- Cooling Towers
- Pumps and Compressors
- Relief Valves

These can be accessed, if needed for specific problems.

Other uses

These simulation models are also used for non-simulation tasks, as well. For example, stream heating/cooling curves and physical properties can be generated for input to detailed equipment sizing software and/or specifications. Another common use is reconciling inconsistent field data by the use of material and energy balance algorithms.

Summary

The keys to using a simulation program effectively are:

- Understand how equipment is modelled in the program.

- Know that the simulations results are only as accurate as the input information (feed characterization and process specification).

- Confirm the model with existing operation, if possible.

- Invest the time to develop a model for future, as well as current studies. An accurate model is always used for more than its original intention.