CONTROLLER
USAID
Date 1/19/94
PN ABR-159
87190

CENTRAL ENVIRONMENTAL AUTHORITY

FINANCIAL MANAGEMENT SYSTEMS REVIEW

USAID-IQC - D/O # 383-0499-C-01-3452-00

ERNST & YOUNG

DECEMBER 1993

ERNST & YOUNG

■ Chartered Accountants
201, De Saram Place,
P. O. Box 101,
Colombo 10, Sri Lanka.

■ Telephone : 697363-7
Telex : 21620 TYCC CE,
Fax : 1-697369
Cable : Ernstaudit, Colombo

WRHF/DTR/SK

December 29, 1993

Mr. Mark Anderson
Executive Officer
USAID - Mission to Sri Lanka
P.O. Box 106
Colombo

Dear Sir

IQC - D/O No. 383-0499-C-01-3452-00

As requested by you vide the above Delivery Order, we have now completed the financial management systems review of the Central Environmental Authority (CEA) and have pleasure in forwarding our report in this regard.

We trust that the information contained in this report is adequate for your purposes. If however, you require any further information or clarification in this connection, please do not hesitate to contact us.

We also wish to place on record our appreciation of the co-operation and assistance provided to us by the management and staff of the CEA and the Controllers Office and project personnel at the USAID Mission.

Yours faithfully

■ Partners : M.T.L. Fernando FCA J.S Mather BA BSc (Econ) FCA G.A.F. Gunatilleke BSc. FCA A.D.B Talwatte ACA FCMA
I.K Bandaranayake BSc. FCA Mrs. I.C Nanayakkara ACA W.R.H Fernando ACA FCMA AIDPM CPA
M.P.D Cooray ACA FCMA MIDPM H.M.A Jayesinghe ACA

CENTRAL ENVIRONMENTAL AUTHORITY

FINANCIAL MANAGEMENT SYSTEMS REVIEW

TABLE OF CONTENTS

Letter of Transmittal
Executive Summary

		Page Ref.
1.0	**BACKGROUND OF THE PROJECT**	1 - 3
	1.1 Introduction	
	1.2 Components of the NAREPP Project	
	1.3 Project Funding	
2.0	**SCOPE OF THE ASSIGNMENT**	4 - 6
	2.1 Objective	
	2.2 Tasks	
	2.3 Our Approach	
3.0	**OPERATING ENVIRONMENT**	7 - 8
	3.1 Legal Status	
	3.2 Responsibilities of the CEA	
	3.3 Organisation Structure	
	3.4 Finance Division	
4.0	**ADMINISTRATIVE AND MANAGEMENT CAPABILITIES**	9 - 10
5.0	**ACCOUNTING AND INTERNAL CONTROL SYSTEMS**	11 - 20
	5.1. Existing Systems	
	5.2 Audit Procedures	
	5.3 Accounting Records	
	5.4 Duties of the Accounting Personnel	
	5.5 Review of Internal Controls	
6.0	**CONTRACT MANAGEMENT CAPABILITY**	21
	6.1 Contracting Procedure	
	6.2 Management Capabilities and Personnel Involved	
	6.3 Types of Contracts	
7.0	**INVENTORY CONTROL PROCEDURE**	22
8.0	**COMPLIANCE WITH LAWS AND REGULATIONS**	23
9.0	**REPORTING PROCEDURES**	24

ANNEXURES

Systems Flow Charts

EXECUTIVE SUMMARY

BACKGROUND

Ernst & Young was requested by the USAID Mission to Sri Lanka to carry out an assessment of the adequacy of the financial management systems of the Central Environmental Authority (CEA).

The CEA was established in 1981 under the provisions of the National Environmental Act No.47 of 1980, as the regulatory authority responsible for the protection, management and enhancement of the environment.

Currently, the CEA is involved in the implementation of the USAID funded Natural Resources and Environmental Policy Project (NAREPP) through the main contractor, the International Resource Group (IRG).

OUR APPROACH

We obtained the existing accounting and internal control systems of the organisation through inquiry and observation, and documented same using flow charts. We also walked through a few transactions to confirm our understanding of the documented system.

We also discussed the weaknesses observed in the accounting and internal control systems and the recommendations made thereon with the management of CEA.

RESULTS

The main observations made during the course of our review are discussed in detail in Section 5.5 of this report. A summary of our recommendations in order to improve the financial management systems of CEA are as follows:

- Adequate follow up action should be taken on internal audit reports. (Sec. 5.5.1)

- The Internal Auditor should also review the financial statements in addition to the checks performed on the internal control system of the Authority. (Sec. 5.5.1)

- Mail should be opened by the Peon in the presence of a responsible officer of the organisation. (Sec. 5.5.2)

- Banking of checks/money orders should be done promptly and the receipts should be sent to the relevant departments without delay. (Sec. 5.5.3)

- Adherence to set procedure with regard to cancellation of supporting documents should be ensured. (Sec. 5.5.4)

- The Director Finance, should peruse the Advances Register on a regular basis to ensure settlement of cash advances on due dates. (Sec. 5.5.5)

According to the management of the Authority, most of the above weaknesses are as a result of inadequate staff. Therefore, we recommend that a comprehensive organisational review of the CEA be carried out to determine the optimum cadre required for the smooth and efficient functioning of the Authority.

1.0 BACKGROUND OF THE PROJECT

1.1 Introduction

The Central Environmental Authority (CEA) was established in August 1981, under the provisions of the National Environmental Act No.47 of 1980. The Authority initially functioned as a policy making and co-ordinating institution. With the 1988 amendments to the National Environmental Act, the Authority was transformed into an essentially regulatory institution. The Authority presently functions directly under the Ministry of Environment and Parliamentary Affairs where a project Ministry of Environment also has been established.

At present, the CEA is involved in the implementation of the USAID funded Natural Resources and Environmental Policy Project (NAREPP).

The purpose of the NAREPP project is to assist the Government of Sri Lanka to improve public and private institutional performance in formulating and implementing effective environmental policies and developing sustainable and environmentally sound development programs.

The project was commissioned in June 1990 with an expected life span of seven years.

1.2 Components of the NAREPP Project

The four major components of the project are described below:-

- Natural Resource management

  The project will support the various agencies charged with meeting the requirements of the National Environmental Act. Support will concentrate on enhancing natural resource planning and management capabilities in core environmental agencies and stimulate development of these capabilities in the private sector.

- Special Projects

  The project will support special projects designed to develop and test new forms of public - private partnership, that can contribute towards more effective natural resource management at the local or regional level.

- Impact Assessment and management

  The project supports efforts to improve government and private sector investment decisions, as well as operating policies by ensuring better analysis of alternative uses of natural resources and better understanding of how decisions can affect environmental resource endowments. Hence, the project will provide regular training in specialized areas such as environmental management and environmental assessment for government and private sector personnel.

- Public Education and Participation

  Citizens at the local and national level need to become educated in environmental matters and to take the initiative to participate in the decision process. Hence, this component of the project will build on and expand the participatory framework for environmental and economic decision making.

1.3 Project Funding

The budgeted cost of the project is US$ 16 million of which 75% amounting to US$ 12 million is to be funded by an AID grant. The balance 25% amounting to US$ 4 million is to be funded by the Government of Sri Lanka.

International Resource Group (IRG) is the main contractor responsible for the NAREPP project, whilst the Ministry of Environment is responsible for the overall monitoring and assessment of project performance.

As a result CEA does not maintain records pertaining to USAID funds expended on the project.

At present, the only form of assistance provided to CEA by USAID is the procurement of certain commodities through the main contractor.

2.0 SCOPE OF THE ASSIGNMENT

2.1 Objective.

Ernst & Young was requested by the United States Agency for International Development (USAID) Mission to Sri Lanka, to carry out an assessment of the adequacy of the financial management systems of the Central Environmental Authority (CEA).

2.2 Tasks.

We were required to carry out the following tasks in achieving the above objective as given in the relevant Delivery Order.

I. Review and comment on the legal status, goals, organisation structure, structure of the finance division and sources of funding of the organisation being assessed. *(Section 3.0)*

II. Review and comment on the administrative and management capability of the organisation, the finance division and in particular the management of the USAID sponsored project. *(Section 4.0)*

III. Review, document and comment on the accounting system in place, accounting records maintained and internal controls etc.

In connection with the above, we were also required to assess the adequacy of the organisation's invoice examination capability, payment procedures and internal controls in connection with approval and payment of invoices. *(Section 5.0)*

IV. Review and comment on the internal control system to determine:

(a) The adequacy of segregation of duties and responsibilities in the following functional areas:

* Accounting
* Procurement (Contracting)
* Collection
* Voucher Payments
* Reporting

(b) The effectiveness of the current internal control system with regard to the management of funds. *(Section 5.0)*

V. Review and comment on the contract management capabilities and procedures to advertise, solicit, negotiate, award and administer contracts both for commodities and services. *(Section 6.0).*

VI. Review and document the inventory control procedure of the organisation, including the adequacy of maintenance of asset registers. *(Section 7.0).*

VII. Ensure the compliance with laws and regulations by the agency. *(Section 8.0).*

VIII. Review the adequacy of the recording and reporting procedures of the counterpart contribution under the AID grant. *(Section 9.0).*

2.3 Our Approach

The following procedures were adopted by us in carrying out the above tasks:

- Reviewed the agreement between the USAID and Government of Sri Lanka (GOSL) to obtain an understanding of the terms and conditions of the contract, the background of the project and the implementing agency etc.

- Reviewed the National Environmental Act to ensure that the Agency is complying with the relevant regulations.

- Obtained the existing accounting system through inquiry of client personnel, and available documentation such as systems manuals etc.

- Documented the existing system through the use of flow charts.

- Performed walk-through tests and observed the client procedures to ensure the proper implementation of the documented system.

- Discussed the main areas of concern/weaknesses relating to the accounting and internal control systems and recommendations made there-on, with the management of the Authority.

3.0 OPERATING ENVIRONMENT

3.1 Legal Status

The CEA which functions under the Ministry of Environment & Parliamentary Affairs is an Authority established under the National Environmental Act No.47 of 1980.

3.2 Responsibilities of the CEA

CEA is the regulatory authority in Sri Lanka which is responsible for the protection, management and enhancement of the environment.

As regards the NAREPP project, CEA is mainly involved in the natural resource management and impact assessment and management components of the project.

For this purpose, USAID supports the CEA with technical assistance and procurement of commodities required for the implementation of the project. This assistance is effected through IRG, the main contractor to the NAREPP project.

3.3. Organisation Structure

The organisation structure of the senior management of CEA is given in Exhibit 3.1, whilst the organisation structure of the Finance Division is depicted in Exhibit 3.2.

The present staff strength of CEA is 122 employees, although the approved cadre is 150 employees.

3.4 The Finance Division

The Finance Division is headed by the Director Finance, who is a Chartered Accountant. She joined the CEA in the early part of this year and since then has been instrumental in rectifying several weaknesses relating to the internal control system of the organisation.

The Accountant is also an associate member of the Institute of Chartered Accountants of Sri Lanka. Therefore it appears that the Finance Division of the CEA is staffed with professionally competent personnel.

The respective duties of the personnel in this division are described in Section 5.3.

All books of account of the CEA are maintained manually.

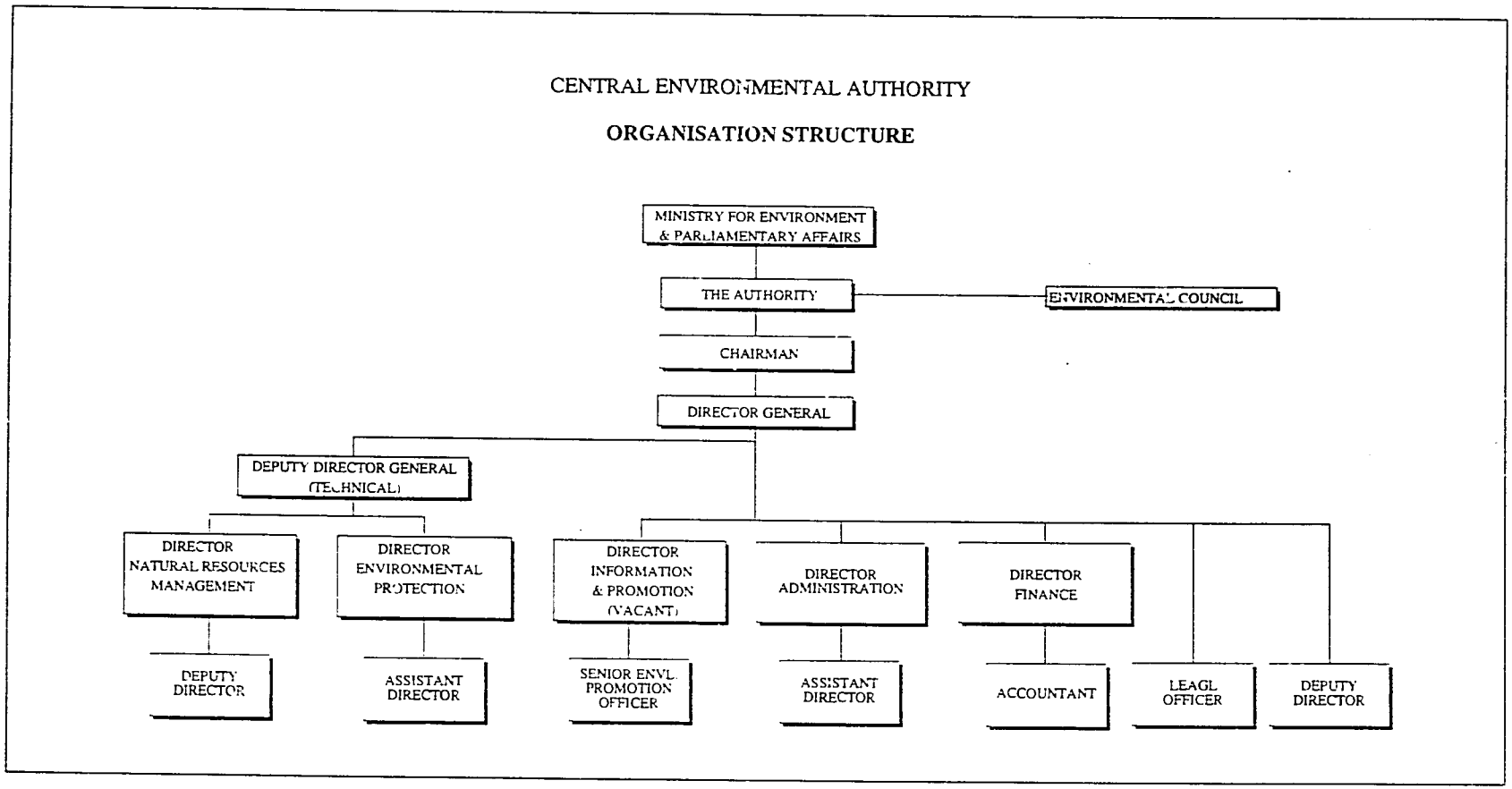
CENTRAL ENVIRONMENTAL AUTHORITY
ORGANISATION STRUCTURE
MINISTRY FOR ENVIRONMENT & PARLIAMENTARY AFFAIRS
THE AUTHORITY
ENVIRONMENTAL COUNCIL
CHAIRMAN
DIRECTOR GENERAL
DEPUTY DIRECTOR GENERAL (TECHNICAL)
DIRECTOR NATURAL RESOURCES MANAGEMENT
DIRECTOR ENVIRONMENTAL PROTECTION
DIRECTOR INFORMATION & PROMOTION (VACANT)
DIRECTOR ADMINISTRATION
DIRECTOR FINANCE
DEPUTY DIRECTOR
ASSISTANT DIRECTOR
SENIOR ENVL. PROMOTION OFFICER
ASSISTANT DIRECTOR
ACCOUNTANT
LEAGL OFFICER
DEPUTY DIRECTOR

EXHIBIT 3.1

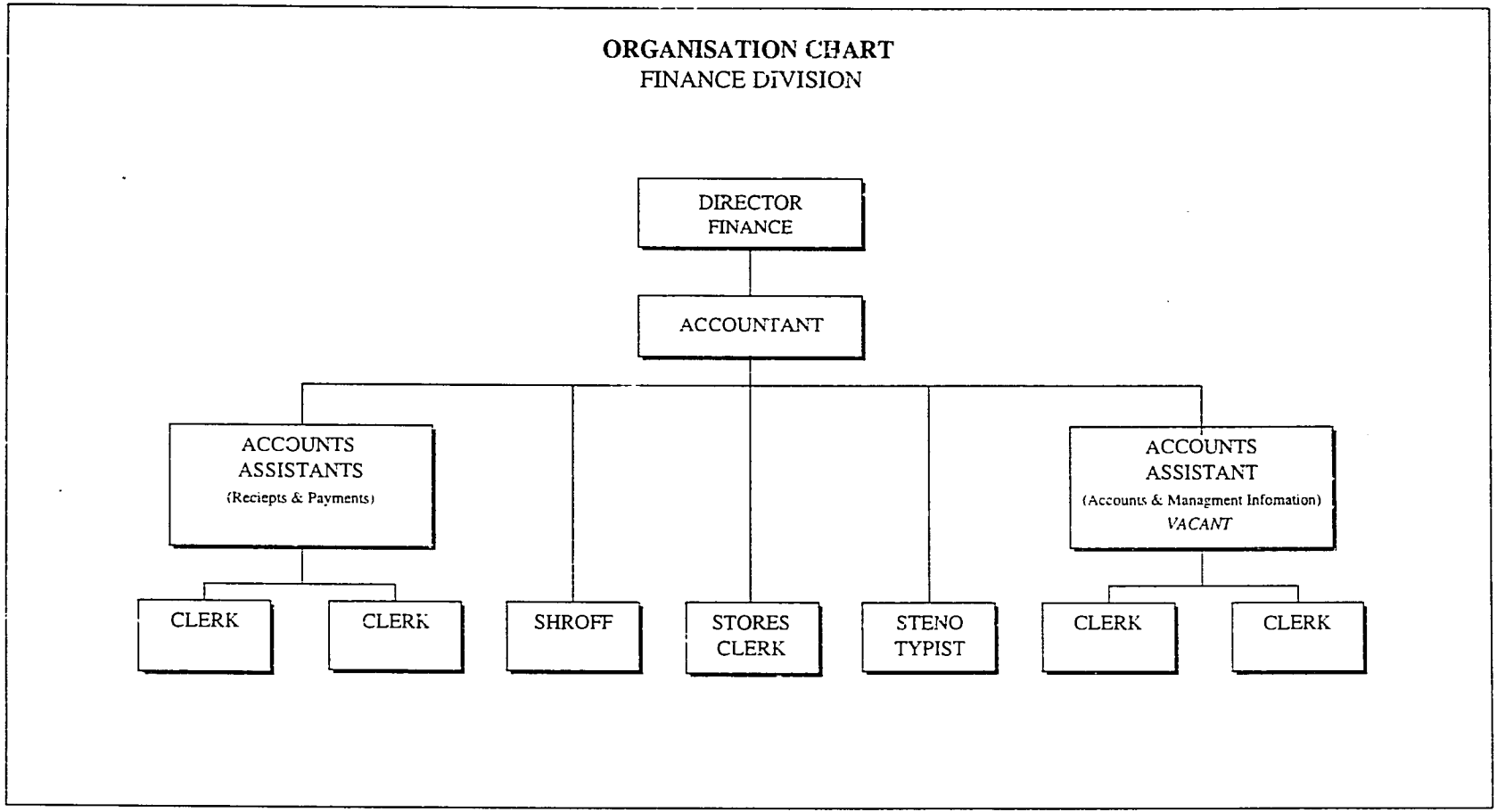
ORGANISATION CHART
FINANCE DIVISION
DIRECTOR FINANCE
ACCOUNTANT
ACCOUNTS ASSISTANTS
(Reciepts & Payments)
ACCOUNTS ASSISTANT
(Accounts & Managment Infomation)
VACANT
CLERK
CLERK
SHROFF
STORES CLERK
STENO TYPIST
CLERK
CLERK

4.0 ADMINISTRATIVE AND MANAGEMENT CAPABILITIES

It appears that the Authority has an adequately qualified and experienced Senior management team as evident from the related details given below.

DESIGNATION	NAME	YEAR OF APPT.	QUALIFICATIONS	EXPERIENCE
Chairman	A.A.G.K. Amaratunga	1991	B.A.- (Hons) - 2nd class University of Ceylon Diploma in Surveying - University of London Diploma in Management Development - Academy of Administrative Studies Certificate of Corporate Planning - NIBM Certificate on Housing, Property Development and Management - Centre for Housing, Planning and Building. Certificate on Feasibility Analysis of Small Scale and Medium Scale Projects. Fellow of the Institution of Survey Engineers (S.L) Licentiate of the Institute of Surveyors	1957 - 1966 Assistant Superintendent of Survey. 1967 - 1970 Superintendent of Surveys. 1971 - 1974 Assistant Surveyor General 1975 Deputy General manager, State Gem Corporation 1976 - 1977 Deputy Surveyor General 1978 to Feb. 1990 Senior Manager (Regional Planning and Area Administration) Feb.1990 - June 1991 Director, Regional Development and Env. Planning
Director	V. U. Ratnayake	1993	B. Sc. (Sri Jayawardenapura) MSc. Terpene Chemistry (Perfumery) (Prague) Phd. Pharmaceutical Chemistry (University of Wales)	1967 to 1968 University Lecturer 1972 - 1985 CISIR 1985 to 1986 Ayurvedic Drugs/WITO project 1986 to 1988 Pharmaceutical Project - JICA/Pharmaceutical Corporation. 1988 to 1993 Coca-Cola System

DESIGNATION	NAME	YEAR OF APPT.	QUALIFICATIONS	EXPERIENCE
Deputy Director General	K.G.D. Bandaratilake	1985	MSc. Chemical Engineering Specialised in Basic Organic and Petrochemical Synthesis	1973 - 1979 National Paper Corporation. 1979 - 1985 Greater Colombo Economic Commission.
Director (National Resources management)	S.E. Yasaratne	1983	BSc. MSc.	1981 - 1982 University of Colombo Lecturer.
Director (Environment Protection)	R.R.W. Ellepola	1984	BSc. MSc.	1974 University of Colombo. 1974 - 1975 Government Analysts Department.
Director (Administration)	A.P. Gunawardena	1992	BA - 1967 Diploma in Personnel Management. Post Graduate Diploma in General Management A.V.B. The Netherlands	1967 - 1973 Ceylon Transport Board. 1973 - July 1979 State Development & Construction Corporation. July 1979 - Sept. 1979 Cement Corporation. Sept. 1979 - 1992 Coconut Cultivation Board.
Director (Finance)	S. Paramasothy	1993	B.Com (Special) Associate member of the Institute of Chartered Accountants- Sri Lanka	1980 - 1987 National Housing Development Authority 1987 - 1988 M/s. Haqque Martin & Co., Chartered Accountants. 1988 - 1989 M/s. Alyar & Co, Chartered Accountants 1989 - 1990 M/s. Kugapalan & Co. Chartered Accountants 1990 - 1993 National Aquatic Resources Agency.

5.0 ACCOUNTING AND INTERNAL CONTROL SYSTEMS

5.1 Existing Systems

The existing accounting and internal control systems of CEA are depicted by the flow charts annexed to this report.

Our observations and recommendations with regard to these systems are discussed in Section 5.4.

5.2 Audit Procedures

External Audit

The annual statutory audit is carried out by the Auditor General of Sri Lanka as stipulated by the National Environmental Act. The last annual report available is for the year ended December 31, 1991. However, we were informed that the audit for 1992 is also completed, though the report has not been formally issued as yet.

Internal Audit

In addition to the statutory audit, CEA also has its own Internal Audit unit comprising one Internal Auditor and an Audit Assistant. However, this Unit was created only in the latter part of 1992.

We have reviewed the internal audit programs and audit reports prepared by the unit for adequacy and competency and conclude favourably.

The audit reports are sent to the Chairman on a quarterly basis for necessary action. However, we noted that the follow up action is inadequate, which results in the internal audit being ineffective. The adequacy of the internal audit function is further discussed in Section 5.5.1.

5.3 Accounting Records

All accounting records of the CEA are maintained manually. The main books of account and control registers maintained by CEA are described below:-

- General Ledger (GL)

  At month end a clerk enters all payment vouchers and journal vouchers in the General Ledger.

- Fixed Asset Registers

  Fixed Asset register, records all receipts and issues of every article. Separate registers are maintained for :-

  - Laboratory equipment
  - Furniture
  - Office equipment

- Advance Register

  All payments made in Advance to procure goods or services are recorded in this register. Also settlements of the advances are recorded in this register.

- Voucher Register

  All payment vouchers raised and approved are serially numbered and c tered in this register.

- Cash Book

  CEA maintains two separate cash books in order to record funds received from the Treasury and funds received from NORAD.

In addition to the above, the CEA also maintains a petty cash book and a stamp register.

5.4 Duties of the accounting personnel

The various duties and responsibilities of the personnel in the Finance Division are summarised below:

Director Finance

As head of the finance division, the Director Finance is responsible to the Director General. As such, she is involved in reviewing and approving all finance related activities as given in the annexed systems flow charts. She is also involved in providing management information to the Board of Management, Ministry of Environment and Parliamentary Affairs and the Treasury.

Accountant

The Accounts Accountant is responsible for the certification of all vouchers, preparation of the final accounts, and overall supervision of the accounts department. She is also the custodian of duplicate key to the iron safe used by shroff.

Accounts Assistant

The Accounts Assistant is the acting shroff and as such is responsible for all monies at the office. He is also responsible for the petty cash imprest.

In our opinion, this vacancy should be filled by a proper shroff with a fidelity deposit.

Clerk - 1

Maintains employee cards and statutory files. She is also responsible for the preparation of salaries and wages and all other matters relating to the above subject.

Clerk - 2

Maintains the advance register and payment of advances. This Clerk is also responsible for the preparation of journal vouchers, and posting of the ledger and journals. She is also responsible for the bank reconciliation of the NORAD bank account.

Clerk - 3

Maintains receipt and payment cash book, custodian of check books and writing checks.

Clerk 4

Preparation of monthly cash flow, monthly budget and actual expenditure statement with variance for the submission to the Board. She is also responsible for maintaining the voucher register, assisting the shroff in his absence, and assisting in the preparation of monthly trial balance and half yearly accounts.

Stores Clerk

This Clerk is responsible for the receipts and issues of goods from stores and maintaining stock levels, using Bin Cards. She is also responsible for maintaining the Stores Ledger, Inventory Register and Fixed Asset Register. She is also involved in the semi annual and year end physical inventory; stock verification preparation of monthly, quarterly, half yearly and annual inventory records.

Steno/Typist

Responsible for maintaining the inward and outward registers and all stenographical and related work of the finance division.

5.5. Review of Internal Controls

From our review of the internal control systems of the Authority, the following weaknesses and instances of non compliance with the existing systems were observed.

5.5.1 Observation:

A review of the internal audit function of CEA revealed the following;

- Inadequate follow up action on IA reports/queries:
  Although quarterly reports are submitted to Chairman and relevant officials for action, we did not observe adequate action taken in this regard. (Refer section 5.2)

- Minimal emphasis on review of financial statements:

It appears that the main emphasis of the IA function at CEA is in regard to internal controls, where as little or no attention is given to the financial accounting aspect of the organisation.

Implication:

Inadequate follow up action on IA reports makes the entire internal audit function ineffective. The findings and recommendations of the Internal Auditor will be in vain, if action is not taken to rectify the identified weaknesses. Consequently, it allows for fraud or error to occur in the future as well.

An analytical review of the financial statements of an organisation assists an auditor to identify significant areas for audit attention. The identification of such areas enables an efficient audit. Therefore, review of the financial accounts is an integral part of the IA function. This would also reduce external audit queries and thus speed up the statutory audit.

Recommendation:

We strongly recommend that the Chairman be responsible to ensure that relevant action is taken by the responsible officers with regard to IA queries.

A copy of the monthly financial statements should be made available to the IA unit for review. Also, the final accounts should be given to the Internal Auditor prior to the commencement of the external audit.

Management's Comments:

Internal Audit Unit was started during late 1992 and until July 1993 Internal Auditor functioned alone without any assistance. During the latter part of 1993 CEA was able to give him an assistant. However, up to now we have not been able to give even a typist to this unit as no approval has been granted by the relevant authorities for such an appointment.

During the period under review, the Internal Auditor has raised many queries on lapses on revenue account, expenditure account and NORAD Fund Account. On the direction of the Chairman, such investigations are done from time to time.

With the approval of the Chairman, relevant queries/reports are referred to the heads of various divisions for reports/necessary action. Lack of a typist/steno has been one of the main constraints for reporting on various issues of the CEA.

5.5.2 Observation:

The mail is opened by a Peon without any supervision. The Peon then enters checks/money orders in a "check Register" and submit same to a Secretary (Steno). (Refer annex - Flow Chart # 2)

Implication:

In the absence of adequate supervision, the existing system provides for defalcation of monies received by post.

Recommendation:

The mail should be opened by the Peon in the presence of a responsible officer of the Authority. This official should then reconcile the checks/money orders with the check register before forwarding it to the Secretary.

Management's Comments:

Administrative Officer of the Administration Division is responsible for both inward and outward mail. Your recommendations have been noted and action has already been taken in this regard.

5.5.3 Observation:

The existing receipts system allows the shroff to keep the receipt for two weeks before forwarding it to the relevant division. (Refer Annex - Flow Chart # 2).

Implication:

This procedure has several implications;

- It allows for temporary misappropriation (rolling) of funds by the shroff.

- It would result in delays in banking of receipts, which may have an additional cost in the form of interest, if the Authority is operating on an overdraft.

- It results in operating inefficiencies, as the payee has to wait for a minimum of two weeks from the date of payment to process an application.

Recommendation:

In order to eliminate unnecessary delays in banking funds and processing applications etc, we recommend that the shroff directs all receipts to the relevant department upon actual realisation, rather than wait for two weeks. In our opinion, this should not take more than 3 - 4 days from the date of receipt.

Management's Comments:

As indicated by you there is no possibility of temporary mis-appropriation of funds according to the procedure followed by the CEA. The receipts are issued with 3 copies.

- Original - Issued to the applicant immediately, if paid in cash.
- First Copy - Finance Division
- Second Copy - Relevant Division
- Book Copy - Retained by the Shroff

In the event the payment is made by Money Orders/Postal Orders/Cheques, the Shroff delays the issue of the second copy of the receipt until the moneys are realised.

E&Y's Comments

Although the above system will prevent total misappropriation of funds, it still cannot prevent temporary misappropriations.

5.5.4 Observation:

It was observed from our walk-through procedures that on several instances, the supporting documents for petty cash payments have not been cancelled after payment, even-though the system provides for it. Therefore this observation relates to a non-compliance of the existing system.

Implications:

Non cancelling of supporting documents may result in duplication of payments.

Recommendation:

In order to ensure that supporting documents (invoices) on which payment has already been made are not resubmitted, they should be cancelled as paid. We recommend that the Accountant ensures adherence to this procedure at the time of certifying the payment.

Management's Comments:

Petty cash vouchers are cancelled by the Shroff by placing a mark thus (✓). However, as suggested by you arrangements have been made to issue a rubber stamp for the cancellation of paid cash vouchers.

5.5.5. Observation:

A responsible officer does not review the Advances Register, which has resulted in long over due settlement of cash advances.

Implication:

As noted from our review of the Advances Register and internal audit reports, there were several cash advances not settled within the stipulated period of seven days.

Recommendation:

We suggest that the Director-Finance peruse the Advances Register on a weekly basis to ensure settlement of cash advances on due dates.

Management's Comments:

The Director Finance checks the advance register from time to time and reminders are sent to the persons concerned. If there are delays in settling them this will be stream-lined as recommended by you.

E&Y's Comments

Our observation was based on a review of the Advances Register. This issue was further ratified by the internal audit reports.

5.5.6 Observation:

When performing a walk through of the advance payment procedure, we observed several instances where journal vouchers were not approved by the Accountant. This is an instance of non compliance of the existing system.

Implication: Unauthorized entries may be made in the general ledger.

Recommendation:

The Accountant should ensure adherence to stipulated procedure by the relevant Clerk. The Internal Auditors should also carry out regular reviews to ensure the validity of entries made in the general ledger.

Management's Comments:

Director Finance states that all journal vouchers are approved by the Accountant before posting the ledger. Internal Audit will carry out a regular review as suggested by you.

6.0 CONTRACT MANAGEMENT CAPABILITY

6.1 Contracting Procedure

Generally all purchasing is done via tender procedure. At the beginning of each financial year, CEA calls for applications through a press notification and selected suppliers are registered.

When purchases are to be made, quotations are called from a minimum of three registered suppliers.

Authorisation limits entrusted, to Senior Officials for expenditure is as follows:-

(1)	Directors	-	upto	Rs. 10,000/-
(2)	Director General	-	upto	Rs. 100,000/-
(3)	Chairman	-	upto	Rs. 250,000/-
(4)	The Authority	-	> Rs. 250,000/-	

6.2 Management Capabilities and Personnel Involved

All sealed quotations received are opened in the presence of three officials. (i.e. two officials from the Administration Department and one official from any other department). All three officials sign on the quotations and the date stamp is affixed.

The Tender Board consists of three officials. They include the relevant official with financial authority (see above), an official from the unit of origin of the purchase and the Director Administration.

6.3 Types of Contracts

The main contracts entered into by the CEA are for the construction of buildings and partitioning of buildings. In addition, the Authority has also contracted services on a few instances.

7.0 INVENTORY CONTROL PROCEDURE

A major portion of the inventory at CEA comprise of stationery. (Approximately 85%). Items such as furniture and equipment, tyres and tubes etc. are despatched direct to the relevant location.

The Internal Audit Unit of the Authority has carried out a comprehensive review of the inventory control procedure during the current year. The report reveals several minor weaknesses and instances of non-compliance of set procedures along with necessary recommendations.

Due to the insignificant nature of the items in stock and the above study, we limited our study to a discussion of the IA report and documenting the related system (refer annex).

8.0 COMPLIANCE WITH LAWS AND REGULATIONS

The National Environmental Act No. 47 of 1980 is the main statute governing the powers, functions and duties of the CEA.

In addition to the above Act, the CEA should also confirm and adhere to the laws and regulations stipulated by the Finance Act No. 38 of 1971, Ministry and Treasury directives and extraordinary gazette No. 595/16 - February 2, 1990 under the Act No. 47 of 1980.

From our Limited review which involved discussions with senior officials and perusal of internal audit reports, we did not encounter material instances of non compliance with the above mentioned laws and regulations nor the general laws applicable to such an Authority

9.0 REPORTING PROCEDURES

CEA maintains two separate cash books in order to segregate the funds received from the USAID and GOSL from the funds received from NORAD. Consequently, the Authority operates two bank accounts; Bank of Ceylon - Corporate Branch for USAID and GOSL funds and Hatton National Bank - Maligawatte Branch for NORAD funds.

Monthly expenditure statements as well as activity expenditure statements of the NORAD project are sent to the Ministry of Environment and Parliamentary affairs.

Cash flow statements are prepared monthly and submitted to the Board of Management. The cash flow statements clearly identifies receipts from MEPA and payments in respect of the main categories of expenditure such as environmental education, environmental awareness etc.

ANNEXURES

FLOW CHART SYMBOLS

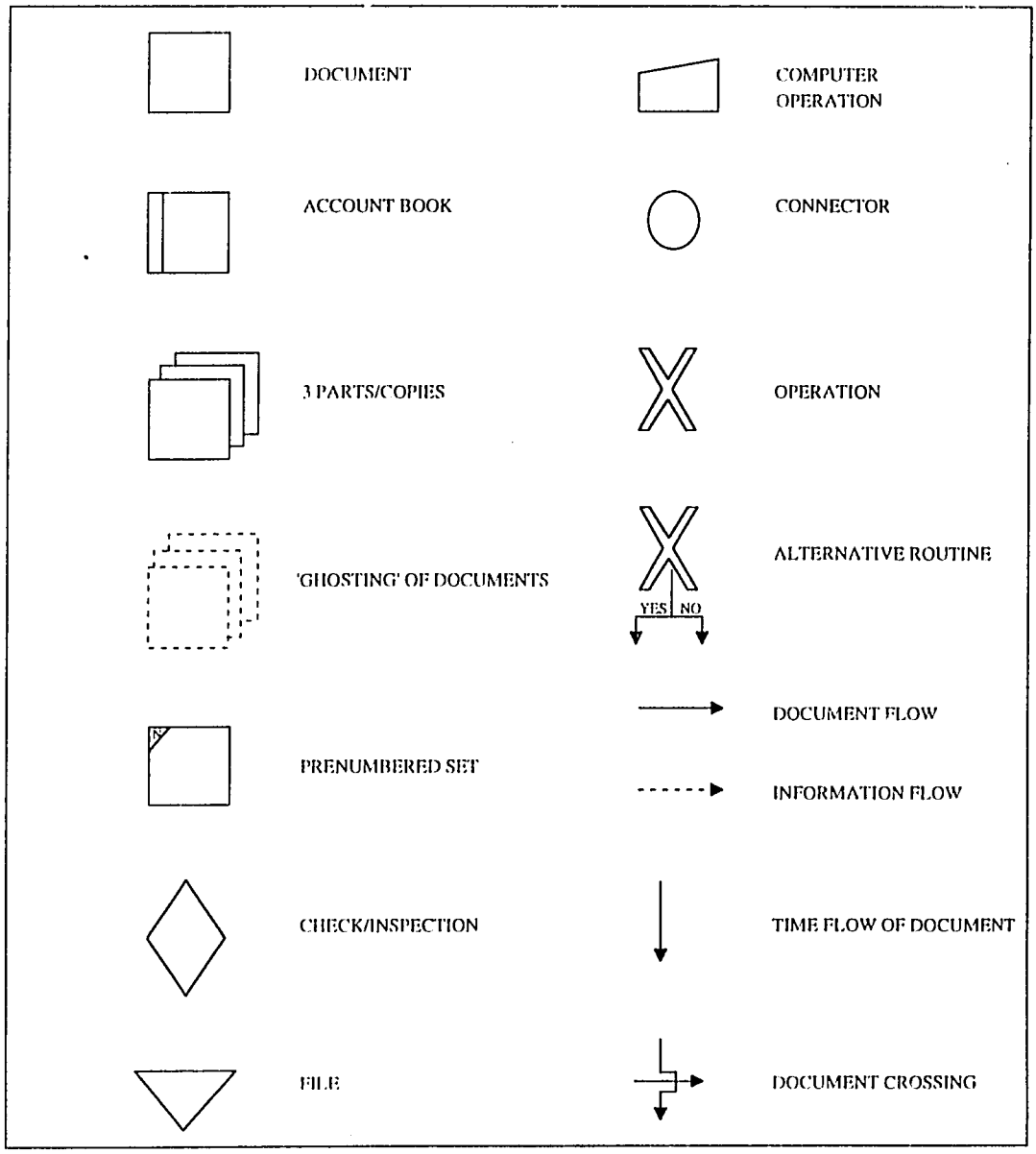

PURCHASE/ TENDER PROCEDURE

NARRATION	ADMINISTRATION DEPARTMENT	TENDER BOARD
When a Request is made by the User Department, the Director Administration will call for quotations from Register of Suppliers		
File opened for Tender and Quotation Registers sent filed by Supplies Assistant		
File number and subject recorded in File Register by Supplies Assistant		
List of Registered Suppliers filed in alphabetical order		
At least three Quotations from Suppliers should be received		
Quotations are opened in the presence of two officials, one from Administration and one from any other department It is then certified by the three officials and dated		
Details of all Quotations received are recorded on a Schedule by Supplier Assistant / Assistant Director		
Quotations to and from Suppliers and the Schedule are filed		
File submitted to Tender Board for selection and approval (Refer Section 6/1)		
After approval Tender is Awarded		
Tender Award is filed		

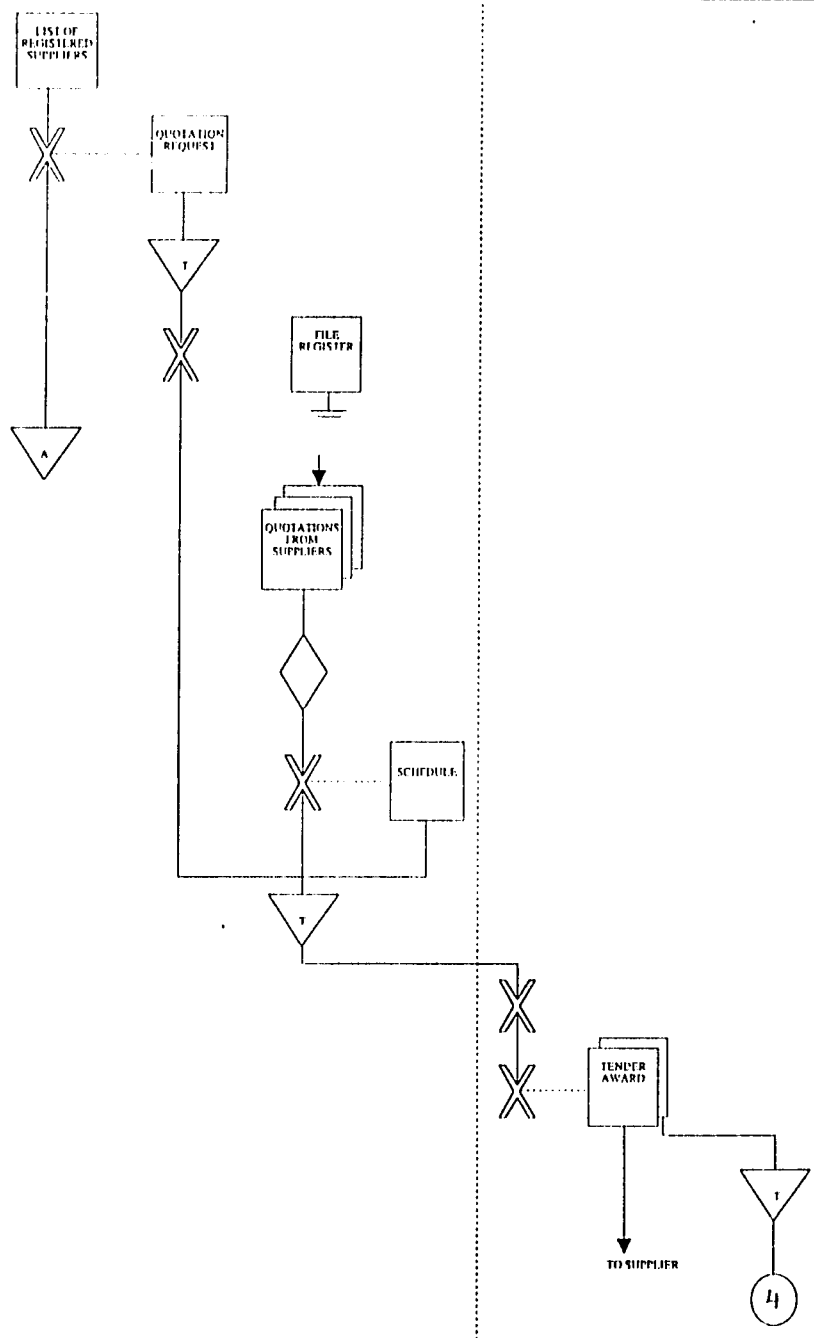

RECEIPT SYSTEM

NARRATIVE	ADMINISTRATION DIVISION	FINANCE DIVISION	RELEVANT DIV.
1 Letters are opened by Peon and Checks and money Orders are entered in Check Register which has the date,lender,registered post number,amount and check / Money Order number	CHECK/ MONEY ORDER; MO& CHECK REGISTER (PEON); MO& CHECK REGISTER; TO PEON		
2 Steno takes over checks / Money Order and Signs Register brought by Peon and enters all details in Register maintained by her			
3 Finance Director signs Register and notes to whom the check is to be handed over		CHECK; MO/ CHECK REGISTER; TO STENO	
4 A prenumbered receipt in four copies is raised by Shroff on receipt of Check / Money Order		R; RECEIPT; BOOK COPY; 3	
Customer copy is temporarily filed for two weeks for realisation and sent to respective division		T	
Banked by shroff		BANK	FORM
On receipt of Customer Copy,necessary Forms and receipt is posted to customer			TO CUSTOMER

CASH RECEIPT SYSTEM

NARRATIVE	FINANCE DIVISION	RELEVANT DIVISION
1 A prenumbered receipt in 4 copies is raised by the Shroff on receipt of cash.		
2 Receipt is entered in the Cash Receipt Register by the Shroff		
3 Receipt Register goes to the relevant division, which is signed and returned to the Finance Division.		
4 Receipts are bundled serially and the Receipt Cash Book is updated on a daily basis.		
5 Receipts are totalled and deposit slips are filed by Shroff and cash banked daily.		
6 Another clerk checks to the bank Statement.		

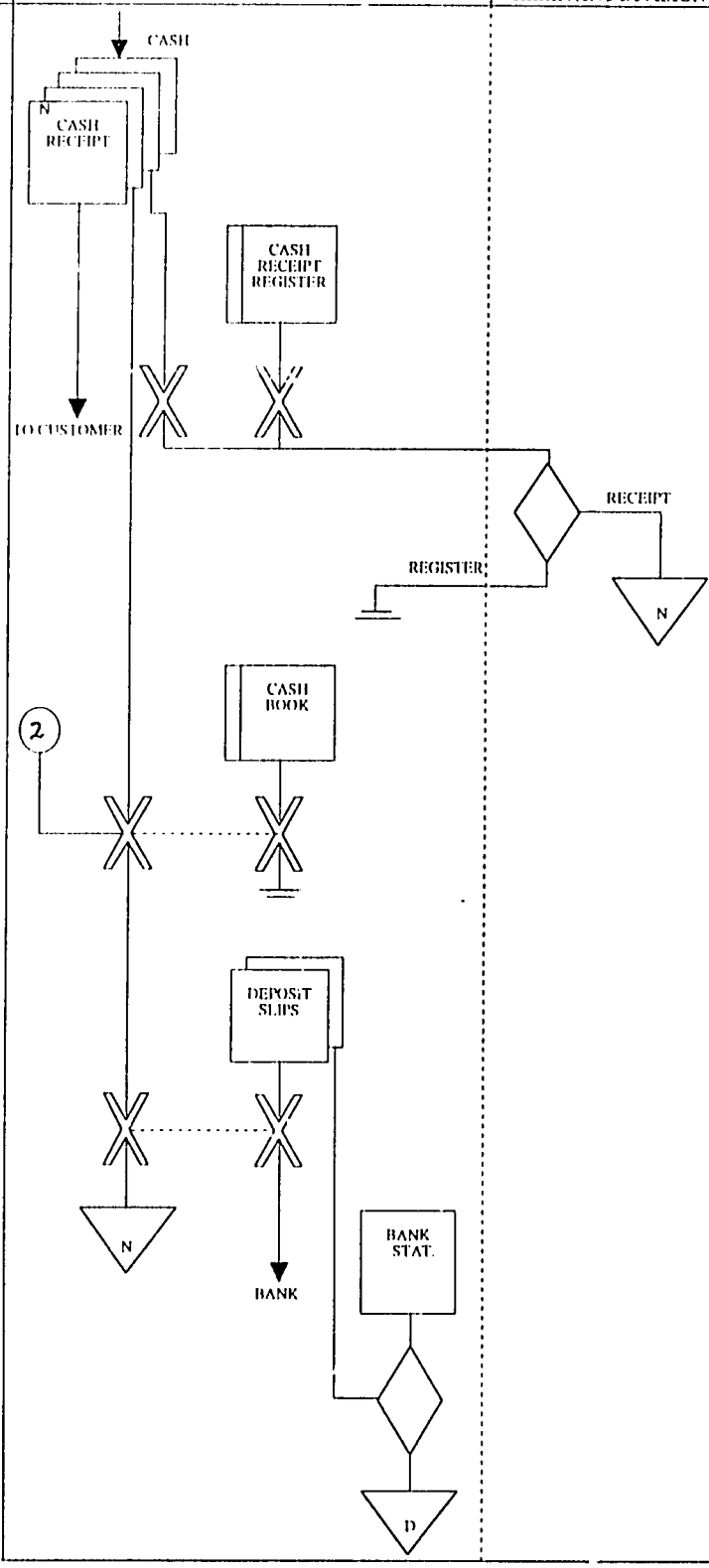

STORES PROCEDURE

NARRATIVE	STORES DEPARTMENT	RELEVANT DEPT.	ADMIN. DEPT.
1 Invoice / Delivery Note accompanies the goods which are then checked with goods and GRN is raised in two copies	INVOICE/ DELIVERY NOTE; GRN		
2 Inventory Register is updated using GRN	INVENTORY REGISTER		
3 Prenumbered Stores Requisition is raised after a call is received from Stores Clerk that goods are received		STORES REQU; TO SECURITY	
4 Authorised by the divisional Head			
5 Inventory Register is updated when goods are issued and signed			
6 Administration officer raises Voucher using Invoice & GRN			PAYMENT VOUCHER
7 Divisional Head authorises the Payment Voucher			5

PAYMENT PROCEDURE

NARRATIVE	RESPECTIVE DEPARTMENT	FINANCE DEPARTMENT
1 Invoice and GRN is received by the relevant department		
2 Voucher is raised by the relevant department with reference to Invoice and GRN		
3 Voucher is authorised by the department head		
4 Voucher is checked by Director Finance		
5 Voucher and all supporting documents are checked by the Accountant		
6 Accounts Clerk check for authentication, accuracy, calculation and accounting code		
7 Accountant rechecks all documents and then certifies the Payment Voucher		
8 Voucher is numbered and a Check is raised by the Cash Book Clerk		
9 The Check is signed by Director Finance / Accountant and Director Administration/ Deputy Director Finance / Chairman		
10 Check is recorded in Despatch Register the Cash Book and the Payment Approval Register are updated by the Cash Book Clerk The Check is sent to the relevant department		
11 The receipt slip of the Payment Voucher is signed by the person who collects the check		
12 Cash Book Payments are analysed in the Cash Flow Register by Ledger Clerk		
13 Cash Book monthly total and total amount in Cash Flow Register should agree		
14 Payment Voucher and supporting documents are filed in date and numerical order		
15 The Ledger Clerk uses the Cash Flow Register to prepare the Cash Flow Summary, which is a column in the Cashbook		
16 General Ledger is updated using Cash Book Summary by Ledger Clerk		

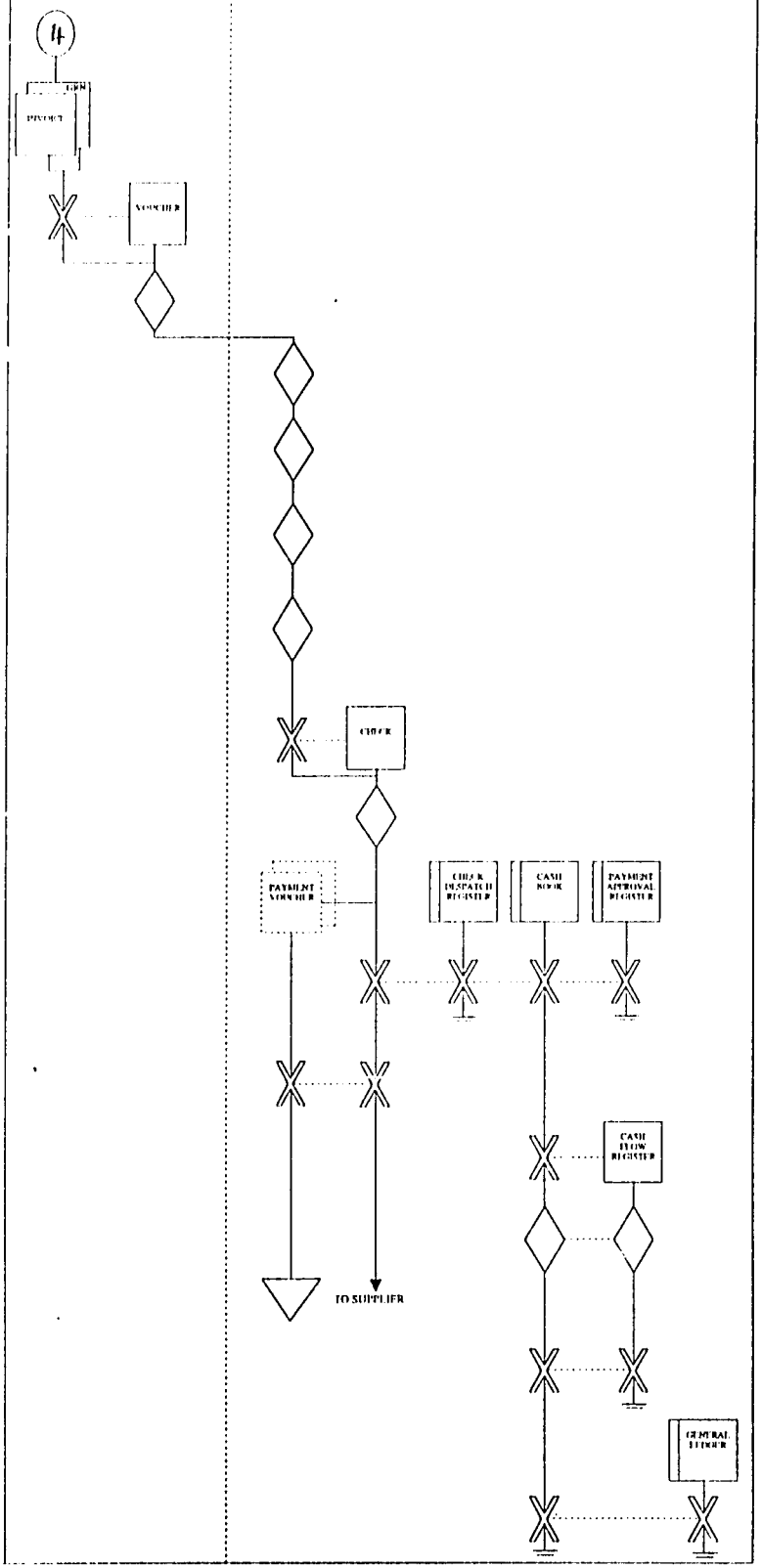

ADVANCE PAYMENT SYSTEM

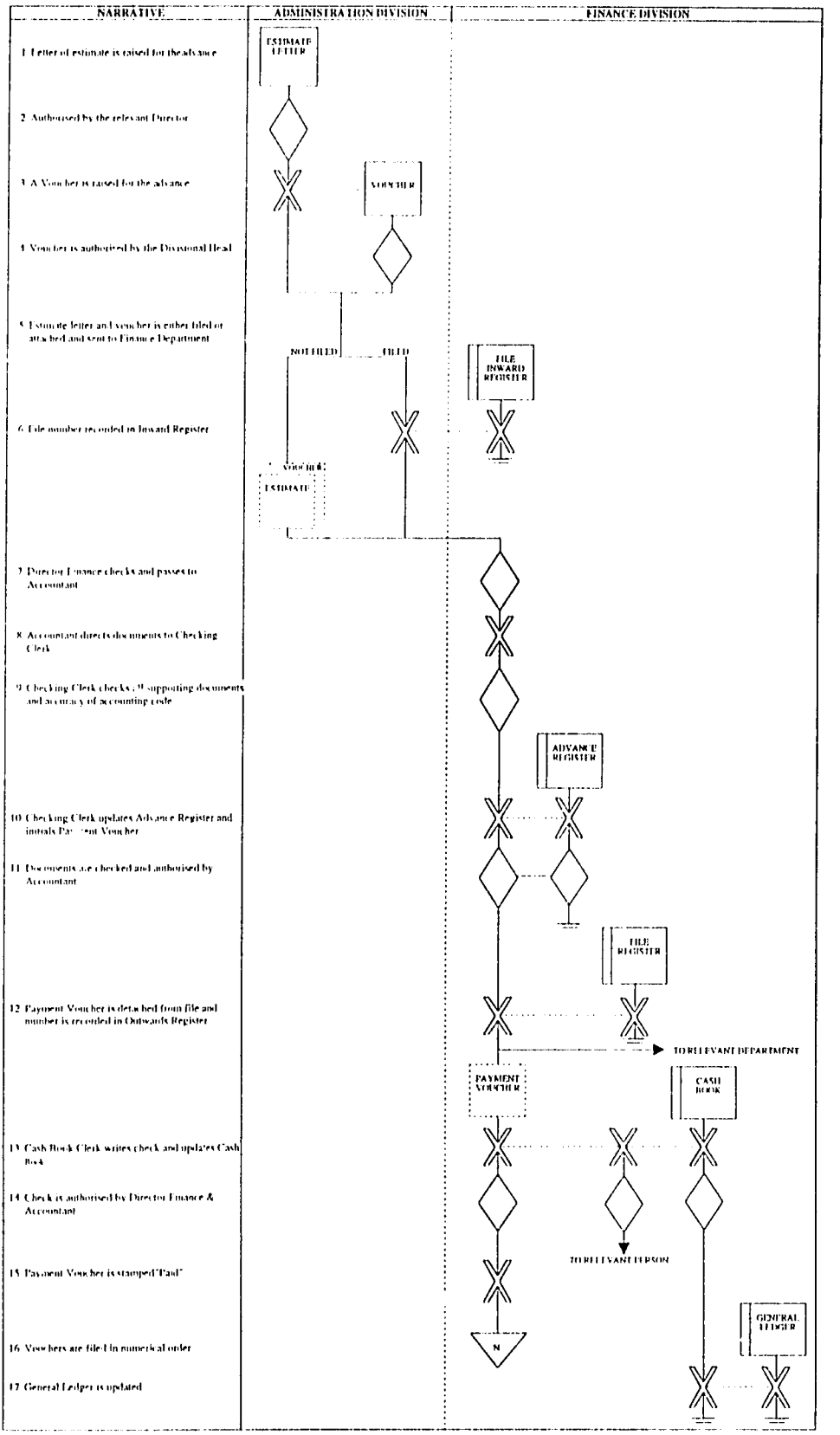

SETTLEMENT OF ADVANCE PAYMENT SYSTEM

NARRATIVE	ADMINISTRATION DIVISION	FINANCE DIVISION
1 Invoice is checked and Settlement Voucher is raised	INVOICE	
2 Invoice & Settlement Voucher are either filed or attached together	SEL VOUCHER	FILE INWARD REGISTER
3 File no. recorded on Inward Register	NOT FILED / FILED	
4 Director Finance approves Settlement Voucher		
5 Checking Clerk checks all documents		
6 Accountant rechecks and certifies Settlement Voucher		OUTWARD REGISTER
7 Settlement Voucher and Invoice is detached from file and file no recorded in Outward Register	RELEVANT DEPERTMENT	VOUCHER SETL VOUCHER
8 Checking clerk then raises a Journal Voucher and updates Advance Settlement Register		JOURNAL VOUCHER ADVANCE SETL REGISTER
9 Journal Voucher is authorised by Accountant		
10 Invoice & Settlement Voucher is attached to Journal Voucher and General Ledger is updated by Ledger Clerk		GENERAL LEDGER
11 Filed in numerical order		N

PETTY CASH SYSTEM

NARRATION	USER DEPARTMENT	FINANCE DEPARTMENT
1 The Voucher is raised in the respective department and supporting document is attached		
2 The Voucher is authorised by the head of department.		
3 The Clerk checks and places rubber stamp "Petty Cash".		
4 Voucher is certified by the Accountant or Director Finance.		
5 Petty Cash Register is updated by the Shroff and payment made.		
6 Vouchers are temporarily filed.		
7 When the Petty Cash float goes below Rs. 5000/=, Vouchers are summarised and a main Payment Voucher is prepared by Shroff to claim reimbursement.		
8 A Clerk checks the accuracy of the Voucher Summary by comparing it with the Petty Cash Register.		
9 The main Petty Cash Voucher is certified by the Accountant.		
10 Cash Book Clerk receives the Voucher package and raises a Cash Check for the amount to be reimbursed. The Cash Book and the Check Register is updated		
11 Petty Cash Voucher is stamped and cancelled		

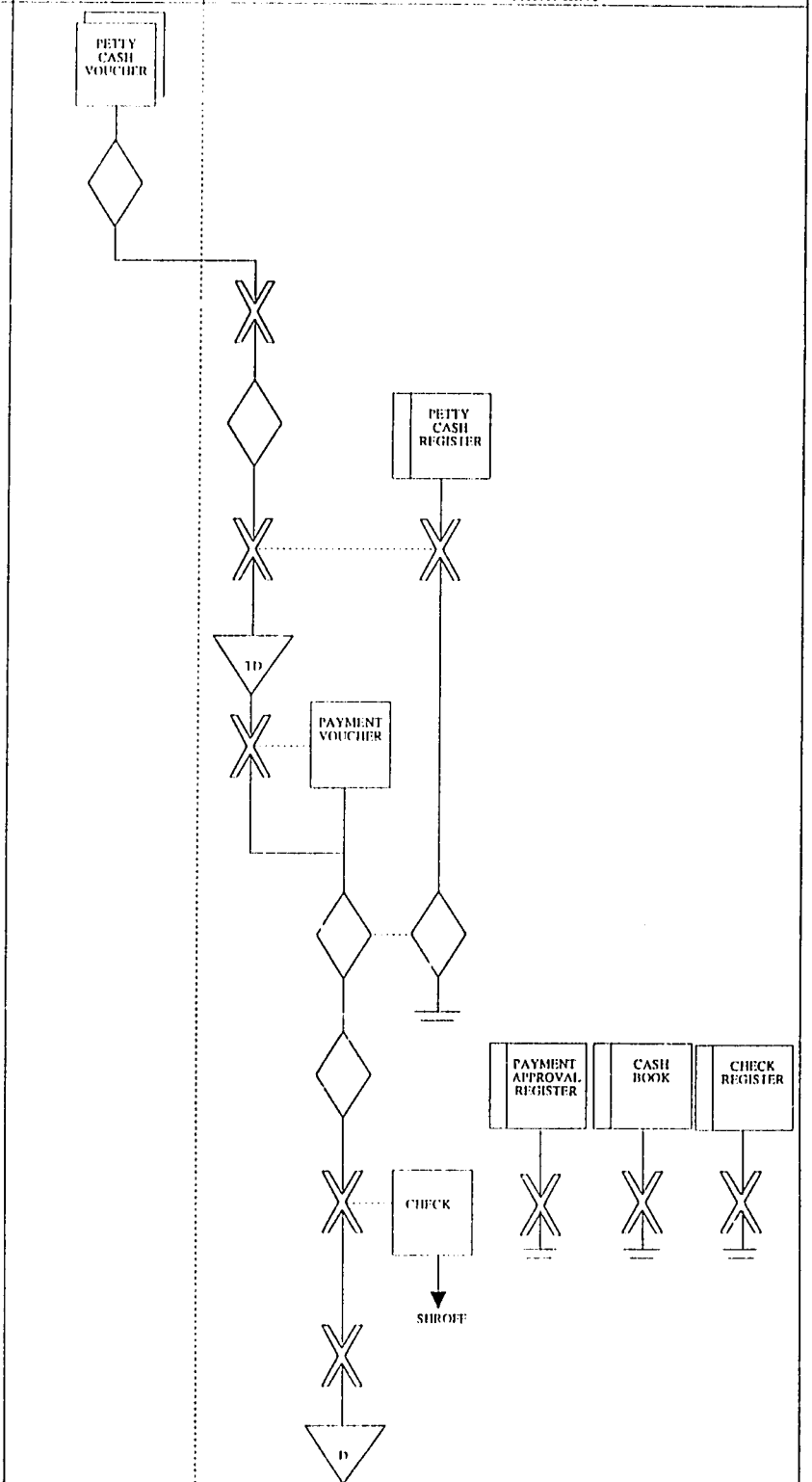

SALARIES SYSTEM

NARRATIVE	ADMINISTRATION DIVISION	FINANCE DIVISION

1 Leave Register is updated using leave form by Administration Clerk after checking for no-pay leave

2 Leave Forms are filed

3 Letter is raised stating details of all no pay leave

4 Certification of no pay leave letter by Administration Director

5 No pay Leave Letter is filed by Administration Clerk

6 Filed with Personal Files

7 Salaries Clerk maintains Loan Register where Monthly deductions & loan interest is calculated

8 All relevant data is entered in Individual Pay Cards At the same time Payroll Sheet is updated using carbon paper

9 Accuracy of Pay Sheet is double checked by Checking Clerk

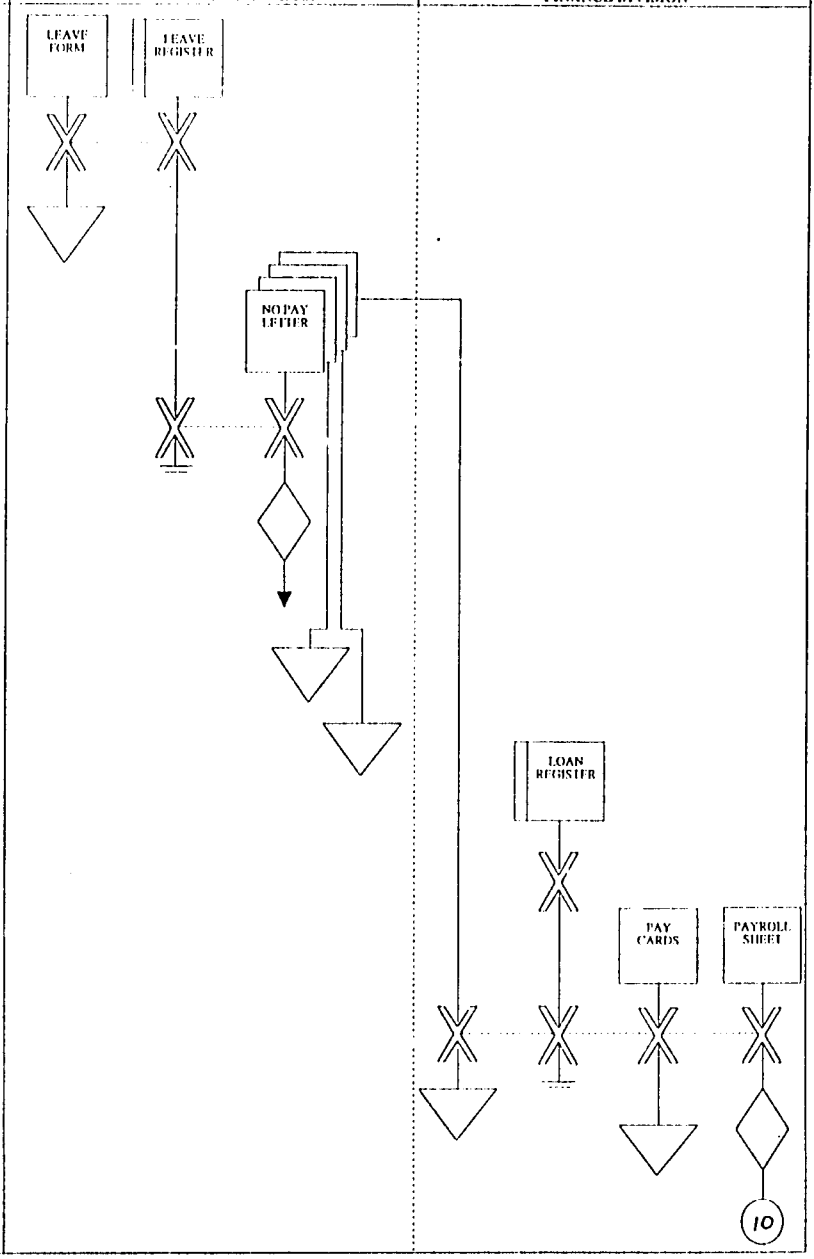

SALARIES SYSTEM

NARRATIVE	ADMINISTRATION DEP.	FINANCE DEPARTMENT
10 Salary summary giving details of gross salaries dept wise, summary of cash payments and payment by bank account, prepared by salaries clerk		
11 All documents are checked for accuracy by Checking Clerk		
12 Accountant certifies Payment Voucher		
13 Cash Book Clerk writes the checks and General Ledger is updated by Ledger Clerk		
14 Payroll Sheets are filed		
15 Check is signed by Director Finance		
16 Check is signed by Director Administration		
17 Individual salary checks are banked and Cash Check for casual labour is cashed by Shroff		
18 Pay packets are prepared by Shroff		
19 Casual employees collect salary and sign Salary Sheet		

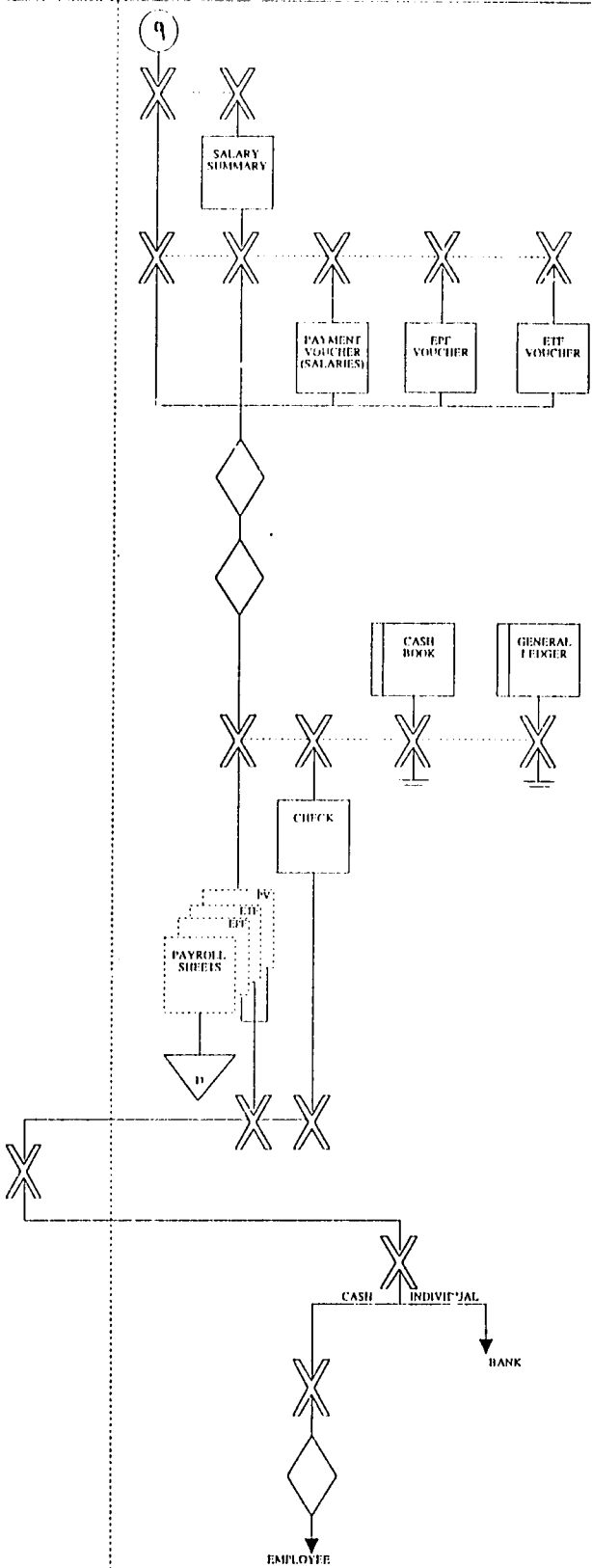

OVERTIME SYSTEM

NARRATIVE	RELEVANT DEPT.	ADMINISTRATION DEPARTMENT	FINANCE DIVISION
Overtime letter is raised indicating the people doing Over time on that date	OT LETTER		
Authorised by the Departmental Head			
Authorised by Deputy Director General			
3 Administration Clerk informs the employees verbally and a photo copy of the letter is sent to Security personnel		TO SECURITY	
5 OT time sheet showing OT time is obtained by the Administration Clerk from the clock in machine		OT TIME SHEET	
6 OT time sheets are certified by the Administration Officer with reference to OT Letter filed date wise			
7 Each employee fills in an OT voucher indicating time & date		D	
8 Administration Clerk certifies Vouchers with reference to OT Time Sheet		OT VOUCHER	
9 OT Clerk calculates OT allowance & checks approvals			
10 OT Voucher is authorised by Accountant / Director Finance			
11 OT voucher for the whole month is bundled and a Payment Voucher is raised by OT Clerk		PAYMENT VOUCHER	
12 Checking Clerk checks accuracy and certifies			
13 PV is certified by the Accountant			CASH BOOK / GENERAL LEDGER
14 Cash Book Clerk raises check and updates Cash Book The G/L is updated by another clerk			
15 Shroff encashes the Check			CHECK
16 Postage stamp is attached to each voucher and signed by employee before payment by Shroff			
17 Payment Voucher & OT Voucher are filed by OT Clerk			