PN-ABQ-137
84951

AGRICULTURAL POLICY ANALYSIS PROJECT, PHASE II

Under contract to the Agency for International Development. Bureau for Research and Development, Office of Agriculture
Project Office Hampden Square, 4800 Montgomery Lane, Suite 600, Bethesda, MD 20814 • Telephone: (301) 913-0500
Telex: 312636 • Fax: (301) 652-3839

DEMAND MANAGEMENT IN INDONESIA

September 1993

APAP II
Collaborative Research
Report No. 363

Prepared for

Agricultural Policy Analysis Project, Phase II (APAP II)

A.I.D. Contract No. DAN-4084-Z-11-8034-00

Authors: **C. Peter Timmer, Harvard Institute for International Development**
Anil B. Deolalikar, University of Washington

Prime Contractor: **Abt Associates Inc.**, 55 Wheeler Street, Cambridge, MA 02138 • (617) 492-7100

Subcontractors: **Harvard Institute for International Development,** Harvard University, One Eliot Street, Cambridge, MA 02138 • (617) 495-9779
Food Research Institute, Stanford University, Stanford, CA 94305-6084 • (415) 723-0693
North Carolina State University, Department of Economics and Business, Box 7645, Raleigh, NC 27695-7645 • (919) 515-3107
Abel, Daft & Earley, 1110 King Street, Alexandria, VA 22314 • (703) 739-9090
International Science and Technology Institute, 1129 20th Street, NW, Suite 800, Washington, D.C. 20036 • (202) 785-0831
International Food Policy Research Institute, 1200 17th Street, NW, Washington, D.C. 20036 • (202) 862-5600

DEMAND MANAGEMENT IN INDONESIA

Part I

Long Run Issues in Demand Management:
Economic Growth and Poverty Alleviation in Indonesia

C. Peter Timmer
Harvard University

Part II

Determinants of Household Nutrient Consumption in Indonesia

Anil B. Deolalikar
University of Washington

Paper produced for the Agricultural Policy Analysis Project (APAP), Phase II
USAID Contract No. DAN-4084-Z-00-8034-00

TABLE OF CONTENTS

LIST OF TABLES AND FIGURES ii
EXECUTIVE SUMMARY iii

PART I. ECONOMIC GROWTH AND POVERTY ALLEVIATION IN INDONESIA
C. Peter Timmer 1

1. INTRODUCTION 1

2. AGRICULTURE AND POVERTY ALLEVIATION IN INDONESIA 2
The Role of Agriculture in Historical Perspective 2
Agriculture and the Structural Transformation 3

3. THE ANALYTICAL ISSUES 6
A Province-Level Analysis of Economic Growth, Poverty, and Food Consumption 10

4. REFLECTIONS ON AGRICULTURE AND POVERTY ALLEVIATION 15

PART II: DETERMINANTS OF HOUSEHOLD NUTRIENT CONSUMPTION IN INDONESIA *Anil B. Deolalikar* 17

1. INTRODUCTION 17

2. ANALYTICAL ISSUES 17

3. BACKGROUND AND DATA 18

4. EMPIRICAL RESULTS 21
Income 21
Family Size and Composition 27
Characteristics of the Household Head 28
Community Characteristics 28

5. IMPLICATIONS FOR FOOD DEMAND MANAGEMENT 31

REFERENCES

LIST OF TABLES AND FIGURES

PART I

Table 1: Agricultural Labor Productivity 4

Table 2: Analysis of Relationships Among Poverty-Related Variables and Economic Growth for Twenty-Six Provinces in Indonesia during the 1980s 13

Figure 1 8

PART II

Table 1: Household Nutrient Consumption Per Capita by Income Group, Indonesia, 1987 20

Table 2: OLS Parameter Estimates of Household Nutrient Intakes Per Capita Per Day, Indonesia, 1987 23

Table 3: Income Elasticities of Household Nutrient Consumption Per Capita, Indonesia, 1987 27

Figure 1: Average calorie availability per capita per day, Indonesia, 1965-1986 19

Figure 2: Per Capita Calorie Intake by Monthly Per Capita Income, Indonesia, 1987 25

Figure 3: Protein Consumption Per Capita Per Day by Monthly Household Income Per Capita, Indonesia, 1987 26

EXECUTIVE SUMMARY

These two papers examine, from different perspectives, factors which influence food consumption in Indonesia. The first paper, by C. Peter Timmer, uses data aggregated at the provincial level. Contrary to economic models which treat patterns and levels of consumption as function of income but independent of the specific source of income, this paper argues that agricultural growth is a uniquely important factor influencing poverty alleviation, generally, and food consumption, specifically. Some potential conflicts in policy between short-run impacts and long-run objectives are discussed. The role of pricing policy is particularly important in this regard, where positive agricultural incentives generate jobs and investment in rural areas but, through high food prices, may harm some elements of the poor population in the short run.

The second paper, by Anil Deolalikar, uses a nationally representative sample of household data to shed light on factors influencing nutrient consumption. In this analysis the level of general household income is a determinant of food consumption but the strength of its impact is weak. Reinforcing Timmer's results, household cultivated area per person, a proxy of rural income component, has an important impact on food consumption. In both studies, non-price and income factors are important, such as immunization programs, environmental hygiene and access to health care. The dynamic paths of these apparent synergies deserve further study. Finally, Deolalikar's paper shows that household size and age composition have a strong effect on food consumption. Studies of aggregate national consumption which fail to correct for these factors when size and composition are changing will probably overstate the nutritional consequences of improvements in per capita food consumption, since an older population requires more nutrients per capita than a younger one.

PART I. ECONOMIC GROWTH AND POVERTY ALLEVIATION IN INDONESIA

C. Peter Timmer

1. INTRODUCTION

Reducing poverty involves three dimensions, two short run and one long run. The first short-run issue addresses ways to increase the welfare level of the poor through direct provision of goods and services. The second short-run concern is for mechanisms to stabilize the intake levels of the poor, especially food intake, when prices and incomes change due to weather, macroeconomic fluctuations, or household misfortune. The long run issue addresses the growth and sustainability of the economic base that finances these improvements, both at the household and the national level.

The models and empirical evidence developed in this paper argue that agriculture plays an especially important, perhaps unique, role in integrating the short run and long run dimensions of poverty alleviation in the context of a strategy for economic growth. However, this role is not well understood. There is a tendency to treat the two short-run and the long-run issues separately for policy purposes, especially in planning food interventions. These interventions often attempt to raise food intake in the short run, but are faced with the foreign exchange costs of rising food imports and with declining levels of food self-sufficiency.

Raising the level of food intake among the poor in the short run is often seen as the task of food price subsidies, ration shops, and food-for-work projects. Stabilization requires commodity-oriented price stabilization programs, investments in irrigation and crop diversification, and macroeconomic management that minimizes the impact of global fluctuations on the domestic economy. Gradual improvements in dietary quality, important for better nutrition and higher standards of health, come primarily from higher household incomes and education levels. These are closely correlated with long-run economic growth.

Managing these three dimensions of food demand is the single most important task in a successful strategy that links economic growth to rapid alleviation of poverty. Moreover, the three dimensions are linked. A policy focus on any one dimension, without commensurate progress on the other two, will ultimately be unsustainable. At one level this argument is merely a restatement of the central thesis of *Food Policy Analysis*, a volume whose initial drafts are more than a decade old. But the argument that both supply and demand issues needed to be treated simultaneously, and in their appropriate macroeconomic setting, now needs to be extended in the Indonesian context. The empirical record of poverty alleviation in Indonesia, during periods of slow as well as rapid economic growth, provides several new lessons on the importance of active management of demand for food as a crucial link between economic growth and poverty alleviation.

2. AGRICULTURE AND POVERTY ALLEVIATION IN INDONESIA

Rapid economic growth, rural development, and poverty alleviation are linked objectives that motivated much of the strategic design behind Indonesia's first 25 years of development planning and that continue to stimulate the search for effective government policies during the next 25 years of development. Agricultural development is the key to reaching all three objectives simultaneously because agriculture offers highly productive investments, has widespread multiplier effects on the rural economy, and stimulates growth in real wages, which is the only way to raise the poor above the poverty line in a sustainable fashion.

Agriculture must play a central role in any sustainable development strategy. Agriculture remains the most important mechanism by which human society captures the only sustainable energy source, solar energy, for direct human consumption. Productive fields, even rice paddies generating methane, almost certainly contribute less to global warming than does asphalt and concrete, when the ultimate uses of those materials – transportation and modern industrial activity – are considered. And the environmental amenities offered by green space, whether woodlands or operating farms, are increasingly appreciated and valued by urban societies.

The Role of Agriculture in Historical Perspective

No one disputes the importance of agriculture in the economic development of Indonesia during the past 25 years. When the growth process started in the late 1960s, two thirds of the labor force worked in agriculture and generated more than half of GDP. No significant increase in living standards was possible unless the entire agricultural sector grew more rapidly than historical trends would indicate. And it did. Stimulated by government investments, new technology, stable incentive prices, and a favorable macroeconomic environment, the agricultural sector grew 4.5 percent per year between 1967 and 1980 (in 1980 prices), or about 2.4 percent per year in per capita terms.

The performance of the food sector has been even more impressive. Between 1969 and 1989 food production per capita increased by 46 percent. Daily intake of food energy per capita increased even faster. These increases in food availability and intake have transformed the degree and nature of poverty and have lifted most Indonesians above a day-to-day concern for how to get enough food to feed their families.

As a reminder of how stark this contrast is with economic performance of the agricultural sector before the New Order government, consider that from 1960 to 1967 agricultural GDP grew by just 1.4 percent per year in real terms, less than one-third as fast as the rate from 1967 to 1980. More importantly, per capita output from agriculture fell by 0.5 percent per year from 1960 to 1967. Average caloric intake was only 1796 kilocalories per capita per day in the mid-1960s. It is no wonder that poverty was so widespread or that the entire economic growth process had come to a halt.

Reversing this stagnation was the first priority of the New Order government. The increases in rural output and the reductions in poverty that have been achieved are important consequences of a development strategy that stressed growth, equity, and stability. In operational terms, the sustained strategic focus of the first 25 years of economic plans was to rehabilitate basic infrastructure, stimulate agriculture, and open the economy to foreign trade opportunities and competition. Now the very success of these efforts raises serious questions for the next 25 years, especially about the role of agriculture and the sustainability of the approach to its development.

Agriculture and the Structural Transformation

The success in raising most of the Indonesian population out of absolute poverty through sustained development of the agricultural sector has obscured another key role of agriculture during the past 25 years, its contribution to macroeconomic activity and employment creation. Until 1974, when oil prices rose sharply, the agricultural sector contributed more to GDP than either the industrial or service sector. The agricultural sector in 1991 was still larger than the manufacturing sector, which made up half of the industrial sector.

More surprising perhaps is the contribution to overall economic growth from the agricultural sector. Between 1969 and 1979, increases in the economic value of agricultural output were 40 percent larger than increases in the value of manufactured goods, despite the fact that manufacturing output was growing 12.7 percent per year during this decade, nearly three times faster than the rate of growth of agricultural GDP. With half of GDP originating in agriculture at the start of the period, even modest growth was important in macroeconomic terms.

A similar story holds for growth of employment. Between 1968 and 1988, for example, the share of the labor force working in agriculture declined from 68 percent to 55 percent. During the same period, the labor force itself expanded by 36 million workers, nearly a doubling in two decades. Despite the declining share of agriculture in the economy, the sector employed about 15 million new workers, or two-fifths of all new employment. However, despite the real success in stimulating agricultural output, only one-sixth of the total increase in GDP between 1968 and 1988 came from the agricultural sector. The mismatch is obvious--40 percent of new jobs earned only 17 percent of new incomes. Absolute poverty in rural areas was reduced sharply as incomes rose, but incomes rose even faster outside the agricultural sector.

These sectoral shifts in employment and income generation are characteristic of all economies going through successful structural transformations induced by rapid economic growth. By stimulating efficient growth in the agricultural sector, government policy has now laid the foundation that will permit the modern industrial and service sectors to provide the main sources of growth in the future. The role of agriculture will thus be quite different during the next 25 years, even apart from any changes in approach required because of concerns about sustainability. When REPELITA VI begins in 1994, agriculture is likely to be less than one-fifth of the total economy. Even if the growth rate for the agricultural sector can be maintained

at 3.5 percent per year – and it is not clear that it can if substantial changes are needed in agricultural techniques and cropping patterns in order to sustain long-run productivity levels – the rest of the economy is likely to grow at roughly double that rate. If so, agriculture will contribute only ten percent of all increases to national income in the early stages of the next 25-Year Perspective Plan Period and about five percent toward the end. That is, agriculture will have ceased to be an important macroeconomic factor whose fluctuations and growth strongly condition the overall performance of the economy.

But growth in employment will continue to depend heavily on performance of the agricultural sector because half the work force will still be in agriculture at the start of REPELITA VI. Even with robust job growth in the industrial and service economies, stimulated by the structural adjustment and deregulation measures introduced in the 1980s and early 1990s, growth in employment in the industrial and service sectors is not likely to keep pace with increases in output. The following table shows what happens to the share of agriculture in GDP and in the labor force under a plausible set of assumptions about growth rates in agriculture and non-agriculture between 1988 and 2018, the last full year of REPELITA X.

Table 1: Agricultural Labor Productivity

	Share of Agriculture (in percent)			
	(1) In GDP (AgGDP)	(2) In Labor Force (AgLabor)	(1)/(2)	Index of Per Capita Productivity of an Agricultural Worker
Actual:				
1968	49	68	0.72	1.00
1988	24	55	0.44	1.58
Projected 2018:				
High	10	35	0.29	4.13
Low	11	40	0.28	2.98

Under the high growth projection, agricultural GDP is assumed to grow at 3.5 percent per year from 1988 to 2018, while non-agricultural GDP grows at 7.0 percent per year. This results in an overall growth rate of GDP of 6.4 percent per year for the entire period, or perhaps 4.7 percent per year in per capita terms. Under the low growth assumption, the growth rates are 3.0 percent and 6.0 percent per year respectively, yielding an overall growth rate of 5.5 percent per year and a per capita rate of 3.8 percent. High rates of economic growth result in

low shares of agriculture in GDP, and vice versa. These growth rates lead to average per capita incomes in 2018 of between $1500 and $2000 per year (in 1988 U.S. dollars), up from about $500 per capita in 1988.

The shares of agriculture in GDP shown in the table are a direct result of the differential growth rates assumed in the example. The range for agricultural growth, between 3.0 and 3.5 percent per year, is well within the historical experience of the past 25 years, but maintaining even a 3 percent per year rate of growth in the entire agricultural sector will not be easy. For either growth rate, the important issue is what happens to the agricultural labor force, especially in relation to the share of GDP generated in the agricultural sector.

In the late 1960s, when two-thirds of the labor force was in agriculture and was generating about half of GDP, the **relative** share of an agricultural worker was about 72 percent of that for the total work force (including agricultural labor). By 1988, although per capita output per agricultural worker had risen by 58 percent in real terms, relative output had fallen to 44 percent of that for all workers.

As the table shows, these trends are likely to continue. By the end of REPELITA X, the relative productivity of an agricultural worker is expected to be less than 30 percent of all workers on average. Compared with workers outside agriculture, productivity of agricultural labor will be only one-fifth as large in 2018, down from a quarter in 1988 and roughly a half in 1968. This growing structural lag occurs because of the difficulty in moving labor out of agriculture into new industrial and service jobs.

The difficulty occurs at both ends of the process. Agricultural labor is usually not particularly skilled at modern industrial and service jobs and has both human and financial capital locked up in agricultural knowledge and enterprises. This fixed capital reduces the desire to migrate from rural to urban areas except under considerable financial pressure. In the modern urban economy, investments are designed to raise labor productivity in the face of rising real wages, thus limiting new job creation. These more capital-intensive investments lower the demand for new migrants from rural areas, especially those with few skills.

The importance of this growing structural lag during the course of rapid industrialization should not be understated. All industrialized countries have faced similar structural imbalances as their economies developed, and Japan, Taiwan and South Korea have faced especially acute problems because of the speed of their industrialization. There is no reason to expect that Indonesia can escape the same dilemma and the political tensions created by it. Even though per capita incomes in rural areas will be rising if the growth rates indicated in the table are achieved, they will not rise at nearly the rate of urban incomes.

Rough calculations based on the same assumptions as shown in the table indicate that by the year 2018, per capita incomes in the agricultural sector could be in a range between $400 and $600, up substantially from $220 in 1988. At the same time, per capita incomes outside the agricultural sector will be between $2200 and $2800, up even more sharply from the $840

estimated for 1988. Thus the ratio of incomes outside agriculture to those earned within the sector will increase from about 4:1 to about 5:1. And the results will be this good only if the rate of migration of labor from rural to urban areas accelerates from the experience between 1968 and 1988. Maintaining the historical rate of decline takes the agricultural labor force to just 40 percent of the total by 2018, whereas the more favorable projection shows it declining to 35 percent.

What will be an appropriate government response to these imbalances in view of the relatively favorable treatment of the agricultural sector during the first 25 years of development? Despite the "rural bias" to the development strategy for the first 25 years, rural incomes **relative** to those in the industrial and service sectors fell by half, partly because the terms of trade between agriculture and industry declined by 50 percent between 1969 and 1989 (the last year for which the figure can be calculated). One obvious response could be to use agricultural price policy as a conscious tool for income redistribution to favor farmers, much as Japan, Korea and Taiwan have done. However, such a price policy would call in question the existing rationale for government intervention into agricultural prices, especially rice prices, which has been stabilization around the trend in world prices rather than persistent farmer protection or consumer subsidies. Sharply higher rice prices might also jeopardize, in the short run, the significant gains in poverty alleviation achieved in the past 25 years. Higher rice prices might be necessary, however, to maintain income growth in rural areas which is essential to continued reductions in poverty. The price policy dilemma for the next several decades is likely to be acute indeed.

3. THE ANALYTICAL ISSUES

Two diametrically opposite policy frameworks can be used to organize the analysis. The first grows out of standard neoclassical assumptions about the impact of commodity trade on prices, production, and consumption in a small, open economy. In this model, border prices directly determine domestic prices, with appropriate allowance for marketing costs. Domestic price changes for food are exogenously determined by changes in world markets (although large-country effects can modify this exogeneity to some extent). Because supply and demand curves have positive and negative slopes respectively, exogenous price changes will cause observed covariance between domestic food supply and food consumption to be negative, holding constant changes in incomes, population, technology, weather, and so on. Even when countries actively manage their domestic food prices, there should be zero or negative covariance between domestic supplies and consumption in the absence of causal links between the supply and consumption sectors. Such links, when important, are normally assumed to work almost entirely through household incomes.

The alternative to this standard neoclassical model of free trade supposes that countries have the potential to "manage" their food economies, with special concern for the degree of food self-sufficiency and the foreign exchange costs of food imports. The central policy issue in this approach is how governments "spend" their increases in food production, that is, how they

manage food **demand** in response to **supply** changes. If green revolution technology permits an exogenous, outward shift in a country's supply curve for food, is the extra output allocated to reduced imports and thus a higher level of food self-sufficiency, or to higher per capita consumption of food? Framing the question in this manner presupposes that domestic food prices are set, in the short run, independently of world prices and that price policy is one of the main instruments used to manage food demand. Empirically, this assumption is widely valid, especially in Asian countries where rice is an important staple. Active management of rice price policy is an especially prominent feature of Indonesia's approach to developing its food economy.

The most likely links between economic growth and poverty alleviation that are mediated by the agricultural sector will be **positive** connections between changes in food supplies produced domestically and food consumption. As explained above, the standard neoclassical approach suggests that, at the macro level, we should expect no relationship, or a negative relationship, between changes in domestic food supplies and food consumption when per capita incomes are held constant in the analysis. Only causal links between production and consumption that are outside the standard border price paradigm can explain a positive relationship. For example, if an exogenous shift in domestic supply due to improved technology permits the same level of food imports to be distributed at a lower domestic price, production and consumption will be positively correlated. Similarly, if shifts in the supply curve redistribute income to poor people, perhaps because of the added demand for labor in rural areas, a positive relationship might exist. Finally, even if higher domestic prices are used to generate additional domestic supplies as a way to improve levels of self-sufficiency, additional food consumption might be forthcoming. Here too the mechanism would involve a dynamic rural labor market responding to the overall increase in rural purchasing power.

These four cases are illustrated in Figure 1. The standard neoclassical model using the border price paradigm, shown in panel 1a, demonstrates clearly the negative relationship between changes in domestic food production and food consumption when prices in world markets cause exogenous changes in domestic prices. The paradigm assumes both that the country's imports are a small share of the world market and that the commodity is relatively unimportant in consumer budgets and in macroeconomic terms so that multi-market and general equilibrium effects can be ignored. Further, even if the supply curve for food shifts to the right because of technical change, food consumption will be unchanged in this model. If world prices, and hence domestic prices, are unaffected, the only impact of an increase in domestic production is a reduction in imports and an increase in self-sufficiency.

Figure 1

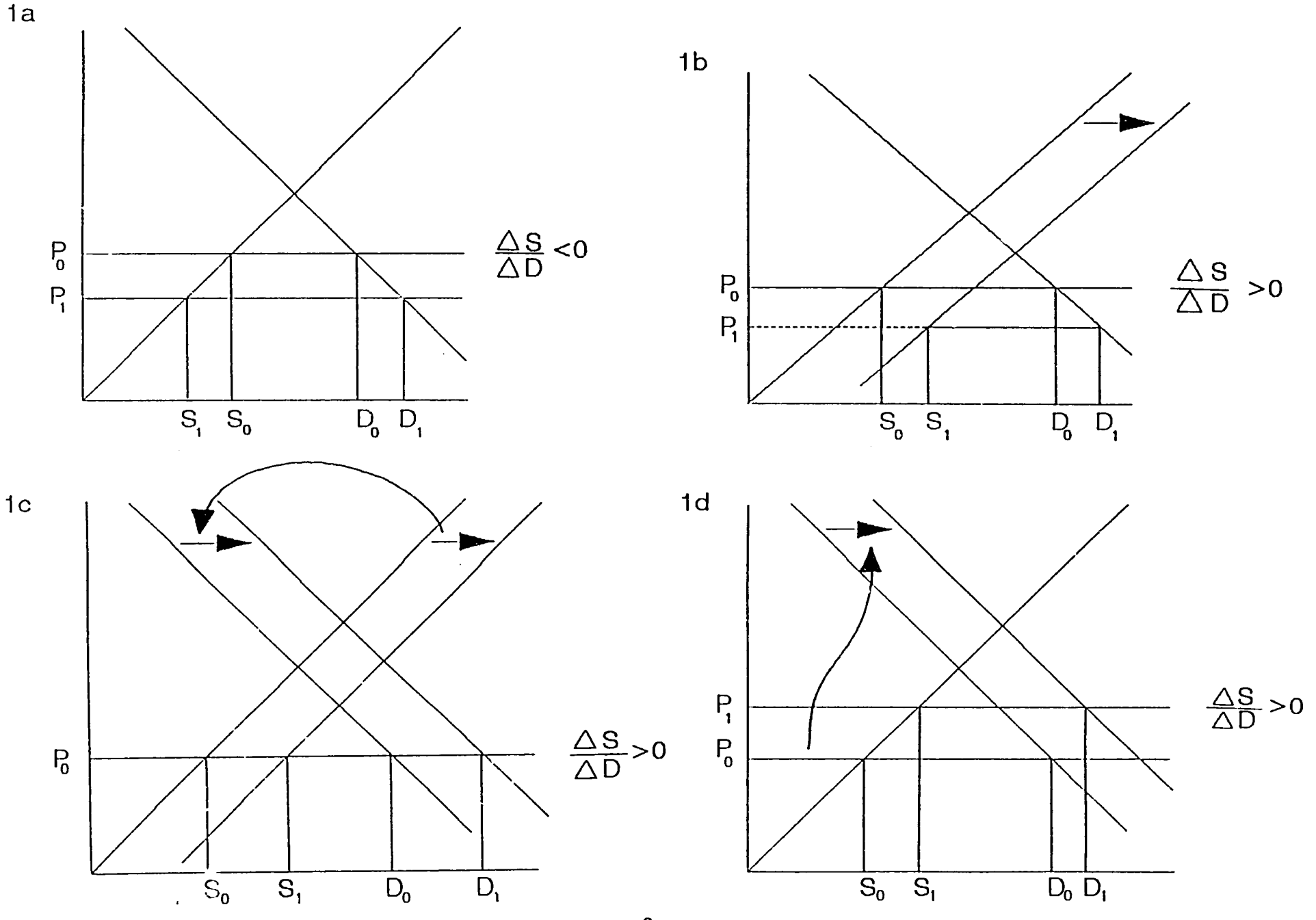
1a
P0
P1
S1 S0 D0 D1
ΔS/ΔD <0
1b
P0
P1
S0 S1 D0 D1
ΔS/ΔD >0
1c
P0
S0 S1 D0 D1
ΔS/ΔD >0
1d
P1
P0
S0 S1 D0 D1
ΔS/ΔD >0

A radically different model of food policy is shown in panel 1b. Here, the degree of self-sufficiency is actively managed by controlling domestic prices, independently of world prices. In the example, the supply curve is shifted to the right, but the additional domestic production is used to increase food consumption while maintaining the previous level of food imports. Lower food prices are the mechanism for achieving this result. The outcome is a positive relationship between changes in domestic food production and food consumption, just the opposite from the first case. Of course, policy could have other objectives, such as reducing imports in order to increase the degree of self-sufficiency.

Panel 1c shows what happens if price stabilization is the policy objective rather than maintaining an existing degree of self sufficiency. At a minimum, when the domestic supply curve shifts to the right, domestic food consumption is unchanged. This result is the same as with the border price paradigm when domestic production increases and world prices remain the same. But the added incomes in rural areas may have important feedback effects on food demand. In panel 1c, the added incomes are shown as shaded areas, one part representing increases in producer surplus, the other increases in costs of production that are assumed to be received by variable factors of production, especially labor. Because rural incomes are nearly always lower than urban incomes, increases in rural incomes will change income distribution in ways that increase the level of food demand for a given average level of per capita income. This effect is shown in panel 1c by shifting the demand curve to the right. In a world of stable prices, even a small increase in food demand because of this feedback effect will result in a positive relationship between domestic food supplies and food consumption.

Panel 1d shows a particularly controversial example. It uses higher food prices to induce an increase in domestic food production, without an outward shift in the supply curve. Obviously, with no feedback effects on consumption, there will be a negative relationship between domestic food production and consumption, as in the standard model in panel 1a. But if the higher rural incomes, again shown as shaded areas in the diagram, induce economic growth in rural areas (relative to urban areas), the higher real wages that result for unskilled labor will translate into a redistribution of income and a consequent shift in the demand curve. If it shifts enough, as in panel 1d, even a price-induced increase in food production might be positively associated with an increase in food consumption.

The example shown in panel 1d is controversial because it is the underlying model behind many structural adjustment programs. If the initial domestic price is well below the world price at a competitive exchange rate, a structural adjustment program that frees both the exchange rate and domestic food prices is expected to have the impact illustrated in panel 1d. If the short-run supply curve is nearly vertical, however, there will be no supply response and hence only a modest reduction in food imports before allowance for any shifts in the demand curve. Higher incomes in rural areas will materialize even without a supply response and the demand curve can shift out anyway. Perversely, there could be an increase in imports if rural incomes stimulate food demand enough. If access to foreign exchange is constrained in this model, or its price is very high, food imports will be limited and food consumption could drop sharply.

Many other combinations and possibilities exist within this theoretical arena. Given the many plausible examples that might be constructed in principle, the more interesting question is how governments behave in fact. If they actively manage food demand in one or more of the ways illustrated, what are the results? Are some approaches to managing the food economy more successful for the poor in the short run but problematical in the long run? Are any successful long-run strategies consistent with rapid alleviation of poverty in the short run? In particular, does the emphasis on changes in rural incomes that are generated by changes in food supply and prices show up empirically? The Indonesian record is particularly helpful in answering these questions.

A Province-Level Analysis of Economic Growth, Poverty, and Food Consumption

Much empirical analysis of poverty levels and efforts to alleviate poverty concentrates on levels of food intake, nutritional status of children, and caloric adequacy within the household. At the macro level, stable food prices and efforts to generate an equitable process of economic growth will support the efforts of individual households to improve their food intake. An analysis of levels and changes in food consumption at the household level provides insights on both the distribution of poverty and the policy environment in which efforts to reduce poverty are set.

The poverty line in Indonesia is defined largely in calorie terms. Progress in alleviating poverty is measured by using data on food consumption from SUSENAS that are available every two or three years.[1] The results from this approach are well known. Indonesia has a remarkable record in reducing the numbers of individuals consuming less than 2100 calories per day. In 1976 more than 54 million individuals fell below this threshold while the numbers were half—only 27 million—in 1990. The rate of poverty during this period fell from 40 percent to 15 percent.

As more and more Indonesians reach middle-class standards of living it is reasonable to ask whether a calorie-based standard remains appropriate as the indicator of poverty. The lower real cost of staple foods—one of the benefits of the increase in agricultural productivity and the accompanying decline in the rural-urban terms of trade—means that these calories buy fewer non-foods. Even allowing for a modest decline in the share of total expenditures needed to procure 2100 calories, and hence the addition of greater non-food expenditures to the "poverty-line basket," the "real" poverty line has declined over time in terms of the overall bundle of goods and services that it provides to the poor.

Such considerations do not, however, outweigh the enormous progress that has been made in providing greater food security to poor people and in raising the great majority of the

[1] The official poverty line is defined separately for urban and rural consumers in each province. The expenditure pattern for food and non-food of the "representative" consumer whose caloric intake just reaches 2100 kilocalories per day is used to define the poverty line. The average cost of calories in this SUSENAS expenditure class is used to calculate the required expenditures to purchase 2100 kilocalories. These food costs are then inflated by the percentage of non-food expenditures to obtain an overall value for the poverty line. Thus the poverty line is based on a calorie standard, but also includes the value of non-food expenditures.

Indonesian population out of absolute poverty. And it is important to realize where that progress has been most rapid. In 1976 ten million urban inhabitants were below the poverty line along with 44 million rural inhabitants. By 1990 there were still 9.4 million urban inhabitants in poverty, but only 18 million in rural areas. Some of the progress in rural areas has been solved by migration to urban areas, although permanent migration to cities has not been nearly as rapid as in Africa and Latin America where agricultural development has been neglected. Consequently, poverty alleviation has primarily been a rural phenomenon and we must look to rural policies to understand the success.

The analysis, using the record for 26 Indonesian provinces during the past decade or so.aims to answer two important questions: what explains differential economic growth across provinces, especially the role of agricultural growth, and what explains improvements in caloric intake, reductions in the rate of poverty, or other measures of poverty alleviation such as reductions in infant mortality?[2]

Neither question can be answered clearly on the basis of the cross section evidence from Indonesia in the 1980s. The only reliable provincial accounts extend from 1983 to 1988 – the accounts excluding incomes from oil and gas are used in this analysis. This time period is short and occurred during a period of considerable economic stress and restructuring. Some interesting results can be reported from Table 2.

Economic Growth – Explaining economic growth between 1983 and 1988 (Y8388) is not very successful. The best equation uses observations weighted by square root of provincial population (SWT), with a specification that draws from neoclassical growth theory. The hypothesis tested is whether, as the theory predicts, poorer provinces have higher growth rates and thus "converge" toward the higher income levels of richer provinces. Equation I-1W shows that the hypothesis receives significant support in this sample; provinces with higher per capita incomes in 1983 (GDPC83) had significantly lower growth rates from 1983 to 1988.[3] However, this result could also be due to the costs of restructuring the more advanced economies of the higher-income provinces during the deregulation activities of the 1980s.

Interestingly, provinces with high shares of agriculture in their economy also had slower rates of economic growth between 1983 and 1988. Because there is a negative correlation of 0.74 between agricultural share (AGSH83) and per capita income – the standard result of successful structural transformation – it is somewhat surprising that both variables have a negative impact on growth. The likely explanation, however, involves economic forces external to the Indonesian economy. World prices for agricultural commodities collapsed in the

[2] The province of Timor Timur is excluded because of inadequate statistical data for earlier years.

[3] Equations with "W" following the number use weighted regression, as noted in the text. The "I" before the number identifies the regressions as using Indonesian data.

mid-1980s and no doubt had a negative effect on economic growth in those provinces heavily dependent on agricultural activities.[4]

Caloric Intake and Food Consumption Patterns – Equations I-2W and I-3W report results from an attempt to explain levels of total caloric intake (TCAL) in 1987 and changes in the starchy staple ratio (DSSRR) between 1981 and 1990. Variations across provinces in caloric intake are not well explained by economic variables. GDP per capita is not significant (and has a negative sign). Income distribution (DIST87), which in this analysis is the ratio of income in the top 20 percent of the income distribution to that of the bottom 20 percent, although it has the right sign, is only marginally significant. Tastes, prices, and activity levels seem to be more important than average incomes in explaining average levels of caloric intake. This finding is important for programs designed to alleviate poverty. Economic growth that raises average per capita incomes, but fails to improve income distribution or other measures to improve access to food, will increase caloric intake very slowly. Because poverty is closely associated with low caloric intake, this type of economic growth will be a relatively ineffective vehicle for poverty alleviation.

Changes in per capita income are more important in explaining changes in patterns of food consumption. The starchy staple ratio, the ratio of calories from rice, wheat, corn, cassava, and sago to total calories, is a reliable indicator of poverty because consumers strongly prefer more variety and higher quality foodstuffs as their incomes permit. As Equation I-3W shows, the impact of increasing incomes on improvements in the starchy staple ratio is significantly positive. No other specification is as successful as this very simple empirical statement of Bennett's Law.

Poverty Rates in 1987 – Equations I-4 and I-4W attempt to explain the structure of poverty in Indonesia in 1987 (POV87). The two specifications show the impact of using weighted versus unweighted observations in the analysis. Weighting each provincial observation by its population clearly emphasizes results on Java. Using unweighted observations places equal weight on results from each province regardless of population. Neither approach is "right" or "wrong." Each reveals different facets of the variance in poverty levels across Indonesia.

[4] It is worth noting that these results do not remain significant when unweighted regression is used.

Table 2: Analysis of Relationships Among Poverty-Related Variables and Economic Growth for Twenty-Six Provinces in Indonesia during the 1980s

Equation I-1W: Dependent Variable is Y8388 1.654 - 0.000455 * GDPC83 - 0.00688 * AGSH83 (16.6) (4.0) (3.4)
Equation I-2W: Dependent Variable is TCAL 1703.0 - 0.0517 * GDPC88 + 523.5 * DIST87 (7.4) (0.5) (1.4)
Equation I-3W: Dependent Variable is DSSRR -0.132 + 0.143 * Y8388 (2.2) (3.0)
Equation I-4: Dependent Variable is POV87 67.73 + 0.618 * AGSH88 - 0.024 * GDPC88 - 48.63 * DIST87 - 44.01 * FSH87R (2.9) (2.2) (1.9) (2.0) (1.4)
Equation I-4W: Dependent Variable is POV87 86.76 + 0.733 * AGSH88 - 0.024 * GDPC88 - 32.09 * DIST87 - 90.53 * FSH87R (4.8) (3.5) (2.4) (1.3) (3.4)
Equation I-5W: Dependent Variable is POV8487 4.809 + 1.470 * AS8388 + 5.591 * Y8388 Irian Jaya is not included. (0.2) (1.9) (0.3)
Equation I-6W: Dependent Variable is POV8487 55.98 + 1.199 * AS8388 - 0.152 * RP85 Irian Jaya is not included. (3.7) (1.8) (2.9)
Equation I-7W: Dependent Variable is IM85M 118.8 - 0.044 * GDPC83 - 0.818 * AGSH83 + 123.5 * SSR81R - 0.656 * IMM89T (2.9) (1.9) (2.4) (1.6) (3.1)
Equation I-8W: Dependent Variable is IM8085 -26.76 - 19.04 * Y8388 + 0.180 * AS8388 - 186.8 * DSSRR + 0.296 * IMM89T (0.9) (0.8) (0.2) (1.8) (1.6)

Note: "W" attached to an equation number indicates the regression was run with weighted observations, using the square root of provincial population (SWT) as the weight. Explained variance, (R2), is not indicated because the meaning is quite unclear for the weighted regressions. Values in parentheses below coefficients are [t]-statistics.

Four variables are significant in explaining poverty levels: the share of agriculture in economic output of the province (AGSH88); per capita GDP, or income, in the province (GDPC88); income distribution in the province, as measured by the ratio of per capita expenditures by the bottom 40 percent of the population to those of the top 20 percent (DIST87); and the share of food expenditures in the total expenditures of the rural population of the province (FSH87R). Although the magnitude of the coefficients and their statistical significance varies in the two specifications, the signs and general interpretation are the same. Holding the effect of the other variables constant in the multiple regression, higher incomes reduce poverty, a higher share of agriculture in the economy increases poverty, improving income distribution reduces poverty, and increasing the food share in expenditures reduces poverty.

None of these effects is especially surprising, although the quantitative impact of per capita income is limited. On average, increasing provincial per capita incomes by 10 percent will lower the provincial poverty rate by just one percentage point. By contrast, a transfer of 2 percent of the income of the upper 20 percent to the bottom 40 percent of the income distribution would lower the poverty rate by 3 to 4 percentage points. Obviously, economic growth with a worsening of income distribution could easily leave the degree of poverty unchanged or even higher.

The significance of the food share variable, especially in the weighted regression, is easily explained. The poverty line is defined by the expenditure level that is just adequate to buy the recommended level of caloric intake. For a given per capita income and income distribution, taste patterns that lead to relatively greater expenditures on food generate a poverty line that is lower than otherwise. This lower poverty line means that fewer people will be below the poverty line when incomes and income distribution are the same. The reduction in the average rate of poverty would thus be automatic.

The most difficult result to explain is the positive relationship between the share of agriculture in economic output and the incidence of poverty. At one level the result is perfectly plausible. Provinces that rely heavily on agriculture are relatively poor. However, the presence of per capita incomes in the regression equation should control for this effect. Something more subtle is being revealed by these results, perhaps the continuing degree to which poverty in Indonesia remains mostly a rural problem. More than 60 percent of all households below the poverty line are defined as "agricultural" and another 10 percent are engaged in "trade," which almost certainly contains a substantial share of rural households. Because the numbers of urban poor have declined only slightly in the past decade, some observers have concluded that poverty is now primarily an urban problem. But the rural poor still remain twice as numerous, even after falling in numbers by 60 percent. Continued progress on poverty alleviation will require continued attention to the rural economy.

Changes in Poverty Rates Between 1984 and 1987 – Equations I-5W and I-6W report the results of efforts to explain changes in the rate of poverty at the provincial level between 1984 and 1987 (POV8487). Irian Jaya is not included in these results because of a change in the definition of poverty for the province between the two years. Only two variables are

significant and, as Equation I-5W shows, the change in per capita incomes between 1983 and 1988 is not one of them. Equation I-6W shows that high rice prices retard the rate of poverty reduction. At the same time, increases in the share of agriculture in provincial economic output (or slower rates of decline) contribute to reductions in poverty.

These results are perhaps the clearest yet presented of the dilemma facing food planners and government officials concerned about reducing poverty. On the one hand, high food prices hurt the poor in the short run. And yet, a healthy agricultural sector, induced at least in part by better agricultural incentives, contributes to the long-run decline in poverty. Indonesia has managed to balance this food price dilemma as well as any country, largely by stabilizing domestic rice prices around the long-run opportunity cost of foreign rice.

Infant Mortality – Equations I-7W and I-8W report analysis of factors contributing to the level of (male) infant mortality in 1985 (IM85M) and changes in this level between 1980 and 1985 (IM8085). Per capita incomes are important in explaining levels of infant mortality but not changes. Holding incomes constant, higher shares of agriculture in economic output lead to lower infant mortality, perhaps through indirect effects on food prices or availability to local inhabitants. A higher starchy staple ratio (SSR81R) increases infant mortality, probably because of the implications for quality of infant and weaning foods. And successful completion of at least part of the immunization program (IMM89T) sharply reduces infant mortality.

It is much more difficult to explain changes between 1980 and 1985. Neither changes in incomes or agricultural shares are significant. Lowering the starchy staple ratio also lowers infant mortality, again probably through the indirect effect on the quality of weaning foods and overall availability of calories within the household. And higher levels of immunization slow the rate of decline in infant mortality, no doubt because the easiest gains come early in the program.

4. REFLECTIONS ON AGRICULTURE AND POVERTY ALLEVIATION

Statistical analysis of the 26 province sample for Indonesia points to several key relationships, although many questions remain unanswered. Domestic food production seems to be very important in raising the caloric intake of the poor. But whether this is because they produce it themselves and thus have immediate access (or "entitlement," to use Amartya Sen's term), or because a healthy rural economy in general is crucial is not yet established. The Indonesian record shows the importance of the agricultural sector in alleviating poverty, but it also highlights the short-run trade-off between helping the poor with low food prices and generating jobs for them in rural areas through agricultural incentives.

Finally, the non-income dimensions of poverty show up clearly in the empirical record, along with mechanisms to intervene. As one example, infant mortality rates can be reduced

through economic growth, to be sure, but an aggressive immunization program works faster. The relatively weak impact of economic growth on poverty alleviation in the short run has been demonstrated repeatedly. And yet the importance of a dynamic economy to create jobs and raise wages is equally clear. The successful country, Indonesia being one clear example, will do both – attack poverty while generating economic growth.

PART II: DETERMINANTS OF HOUSEHOLD NUTRIENT CONSUMPTION IN INDONESIA

Anil B. Deolalikar

1. INTRODUCTION

Knowledge of the determinants of food and nutrient consumption is essential to the policy maker interested in reducing malnutrition and in managing the shifts in food demand that take place with increasing incomes and changing consumer tastes. There are three discernable phases in the *quality* and *composition* of the diet as incomes and tastes of consumers change over time, and that all three dimensions of managing food demand are tightly linked. Progress on any one dimension, without parallel improvement in the other two, will be unsustainable.

The three phases of dietary change are (i) a shift within the starchy staples food group (initially from tubers and roots to coarse grains and later from coarse grains to wheat and rice), (ii) an increase in the share of protein in overall calories, and (iii) an increase in the share of animal protein in total protein. While these shifts in the quality and composition of the diet are influenced by changing personal incomes, they are also driven in large part by demand management (such as food pricing and consumer subsidy) policies and by the distribution and type of income growth (viz., whether rural or urban) experienced by a population. In addition, food supply and physical infrastructure (e.g., transport) can be important determinants of increases, and compositional changes, in food consumption. The objective of this paper is to understand the various influences that operate on the demand for food and nutrient consumption at the micro level in Indonesia.

2. ANALYTICAL ISSUES

In the standard neoclassical model, household food consumption and nutrient intakes are influenced by food prices, income, and household demographic composition. Community variables relating to food supply or to other measures of food availability affect nutrient intakes only via their influences on food prices and income. Exogenous price changes are hypothesized to move food supply and food demand in opposite directions, so that a negative covariance between food supply and food demand will be observed in response to changing prices. On the other hand, since increased food production and supply generally result in greater rural purchasing power (caused by increased demand for farm labor and a resulting increase in agricultural wages), food supply will typically have a positive influence on the demand for food via its effect on farm incomes. But a number of researchers, have observed in cross-country data a strong positive association between growth in food supply and growth in food demand, even after controlling for income growth. This is a puzzling finding that has important policy implications.

The first question that arises is whether this finding is a peculiar result of using highly-aggregated, cross-country data to study the determinants of food and calorie availability. Personal incomes are approximated in cross-country data by average per capita gross domestic product (GDP). Average per capita GDP does not reflect the distribution of income within a society, while the growth of food supply more accurately reflects rural purchasing power. If this is the case, food supply may simply be proxying for rural incomes in the cross-country association between food supply and food demand. This question can only be resolved by exploring the food consumption-income nexus at the micro level, using household survey data. This is one objective of this paper.

A second objective of the paper is to understand the effect of demographic factors on food consumption. This is a link that has not been adequately explored in the literature but which may be important for Indonesia. Food consumption is typically studied at the household level because of the lack of availability of intrahousehold consumption data in most surveys. Changes in household food consumption per capita may occur because of shifts in the demographic composition of families. This may particularly be the case in Indonesia -- a country that has experienced one of the most rapid drops in fertility rates in recent years in the world. A consequence of the rapid drop in fertility is an increase in the share of adults in the household, and this may both increase, and cause compositional changes in, household food consumption.

A third objective of the paper is to understand the effect of community infrastructure—both physical and social—on food consumption. While the effect of roads and transport access in promoting food consumption is easily understood, the relationship between educational/health infrastructure and food consumption variables is more complex, and needs to be empirically examined. A relationship between these variables may indicate the importance of coordinating food demand management, health and educational investment policies.

3. BACKGROUND AND DATA

With a total population estimated at 175 million in mid-1988, Indonesia is the fifth most populous country in the world (World Bank 1990). Although the World Bank ranks Indonesia as a low-income economy with a per capita income of $440 in 1988, the Indonesian economy has enjoyed rapid economic growth during the last two decades. For example, between 1965 and 1988, Indonesia achieved an annual growth rate of per-capita GNP of 4.3 percent -- a rate that few developing countries could match. During this period, average food availability per capita also increased dramatically. For example, per capita calorie availability increased from 1,800 calories per day in 1965 to 2,579 calories in 1986, while protein availability increased from 35 gms to 55 gms over the same period (Figure 1).

The data for this study come from the 1987 round of the National Socioeconomic Survey (SUSENAS), which is a nationally representative survey of Indonesia that is undertaken

periodically. The 1987 round, conducted in January, covered roughly 250,00 individuals residing in 50,000 households. The SUSENAS is primarily a detailed food consumption and expenditure survey. On how many food items was information collected. Recall period. The food consumption data were converted into nutrient (viz., calorie, protein, fat and carbohydrate) equivalents, using standard food-nutrient conversion factors for Indonesia.

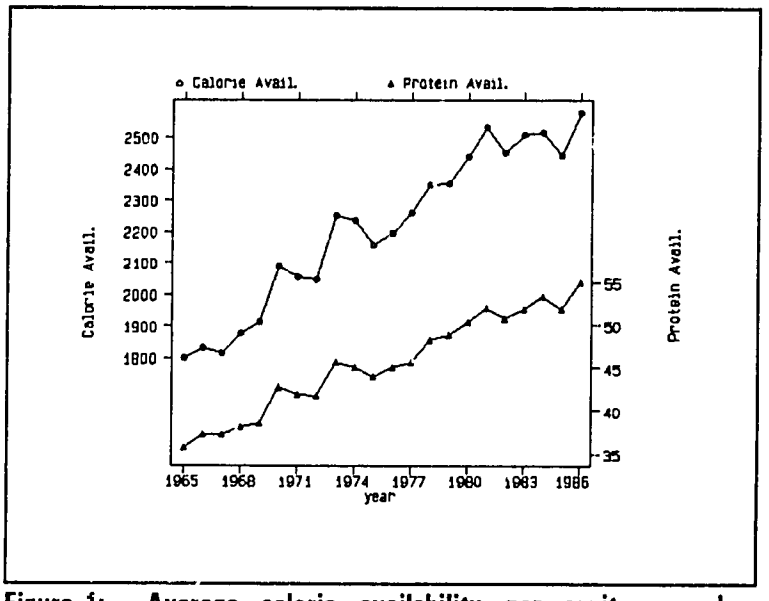

Figure 1: Average calorie availability per capita per day, Indonesia, 1965-86

The other data used are the Village Potential (*Potensi Desa*) module of the Economic Census 1986—a census of all the villages in Indonesia. The Economic Census reports extensive information on the social and economic infrastructure of villages. Although, in principle, it is possible to merge the SUSENAS household data with the village-level information from the Economic Census, the coded SUSENAS data identify only the district (*kabupaten*)—not the village—of residence of households to protect their confidentiality. Therefore, the facilities' data from the Economic Census can only be used at the (aggregated) district level.

Although the 1987 SUSENAS data are rich in some areas—particularly, consumption expenditures and health care—they contain almost no information on household ownership of assets. Similarly, although the Potensi Desa data report information on the amount of cultivable land and irrigation in a village, they did not obtain information on agricultural production. This affects the nature of the empirical analysis undertaken in this paper.

For the sample as a whole, per capita calorie intake is estimated at slightly under 2,000 calories. This is substantially lower than the daily per capita calorie availability figure of 2,579 calories obtained from food balance sheets for Indonesia. However, the distribution of calorie consumption across income groups is wide. Table 1 shows the nutrient intakes of six income groups of households—the poorest 10 percent, the next 15 percent, the second income quartile, the third income quartile, the next 15 percent, and the richest 10 percent. Calorie intake per capita per day is observed to increase monotonically from 1,570 kcal. in the poorest group to 2,421 kcal. for the richest group. The same is true of other nutrients. For example, fat intake per capita per day varies from a low of 21.5 gms for the poorest group to 55.8 gms for the richest group.

Table 1: Household Nutrient Consumption Per Capita by Income Group, Indonesia, 1987

Variable	Poorest 10% of households		Next 15% of households		Second Income Quartile		Third Income Quartile		Next 15% of households		Richest 10% of households	
	Mean	Standard Deviation	Mean	Standard Deviation	Mean	Standard Deviation	Mean	Standard Deviation	Mean	Standard Deviation	Mean	Standard Deviation
Household monthly income per capita	8,741	1,803	13,190	1,202	18,679	2,086	27,961	3,562	43,381	5,663	101,462	124,880
Household daily calorie intake per capita	1,570	446	1,705	477	1,850	535	2,008	640	2,162	736	2,421	895
Household daily protein intake per capita	34.68	11.52	38.29	11.32	42.89	12.87	48.73	16.23	54.82	19.62	65.07	27.21
Household daily fat intake per capita	21.47	12.10	24.59	12.59	29.49	13.97	36.17	17.12	43.78	21.06	55.80	28.42
Household daily carbo-hydrate intake per capita	310.34	93.05	332.08	101.15	351.94	111.09	370.73	128.42	386.36	142.52	414.78	161.66

4. EMPIRICAL RESULTS

Table 2 shows the estimated regression coefficients of the household nutrient consumption per capita equations. The included explanatory variables explain between 21 and 24 per cent of the interhousehold variation in per capita nutrient intakes. Given the fact that this is a large nationally-representative, cross-sectional data set, the explanatory power of the model is impressive. The discussion of major findings is organized by major socioeconomic and demographic explanatory variables.

Income

Table 2, discussed in the previous section, already showed a positive relationship between the household per capita consumption of all four nutrients—calories, protein, fats and carbohydrates—and household income per capita. What is observed in Table 2 is a statistically very significant positive, but diminishing, effect of income on nutrient consumption. However, the income elasticities of all nutrients, evaluated at the sample means, appear to be quite low. For instance, the income elasticities of carbohydrates and calories are estimated to be only 0.05 and 0.07, respectively. The income elasticities of protein and fat consumption are somewhat higher, but still relatively small in magnitude (viz., .10 and .15, respectively). These are relatively small elasticities for a population that, on average, consumes fewer than 2,000 calories per capita per day.

Since the coefficients on the quadratic of per capita household income are significant for all nutrients, it might be instructive to calculate the income elasticities of nutrient intake at different levels of income and nutrient consumption. Table 3, which shows the nutrient elasticities for six income groups, reveals a surprising result. All income elasticities tend to increase with income! This occurs because the coefficients on the income quadratic are numerically small, so that the absolute effect of income on nutrient consumption is nearly constant across income groups. As a result, the proportionate impact of income on nutrient intake increases with income. (See Figures 2 and 3.)

These findings are of some concern for two reasons. First, they indicate that the income elasticities of calorie and carbohydrate intakes among the poorest 10 percent of households are extremely small—only about .02 or so. They continue to remain small—in the 0.02 - 0.04 range—in the next poorest group (next 15 percent of households ranked by per capita income) as well. The implication is that income increases among the poor will lead to little increase in their consumption of starchy staples and energy intake. The fact that the income elasticities of fats and protein are not large either among the poorest group suggests that increased income does not lead to a qualitatively more nutritious diet in terms of protein or fat intake. These results are remarkably similar to those obtained by Behrman and Deolalikar (1987) for a sample of rural households in South-Central India. They found that while the income elasticities of nutrient intake were generally low across all income groups, the income elasticities of food expenditure

were much higher, indicating that even relatively poor (and undernourished) households were consuming more expensive, but not necessarily more nutritious, foods as their incomes increased.

Second, the results are surprising in that the income elasticities for all nutrients increase with income. To be sure, this is in part the result of a linear functional form, but the results also reflect the fact that the coefficients on the quadratic of income and the increase in mean nutrient intakes with income are too small to offset the effect of increasing income on the computed elasticities. The increase in income elasticities with income, especially for calories, is counterintuitive, since one would expect calories to be an inferior commodity at very high income levels.

Table 2: OLS Parameter Estimates of Household Nutrient Intakes Per Capita Per Day, Indonesia, 1987

Independent Variable	Calories Parameter	Calories T Ratio	Protein Parameter	Protein T Ratio	Fats Parameter	Fats T Ratio	Carbohydrates Parameter	Carbohydrates T Ratio	Sample Mean	Sample Std. Dev.
Intercept	3078.768	47.6	72.202	40.3	47.751	24.5	582.980	46.5		
Monthly hh income per capita ('000 Rp.)	4.584	54.0	0.155	65.8	0.171	66.9	0.618	37.6	30.557	45.971
Income squared (x 1000)	-0.890	-34.2	-0.029	-40.4	-0.033	-42.6	-0.121	-24.0		
Household size	-60.538	-36.5	-1.645	-35.8	-1.798	-36.0	-9.629	-30.0	4.787	2.231
Whether urban resident?	-145.269	-18.9	-1.103	-5.2	-0.847	-3.7	-34.726	-23.3	0.295	0.456
Share in household size of:										
Males aged 0-4 years	-651.502	-18.7	-14.730	-15.3	-13.229	-12.6	-117.972	-17.5	0.054	0.107
Males aged 5-14 years	-290.904	-10.4	-8.182	-10.5	-11.505	-13.6	-40.429	-7.4	0.118	0.153
Males aged 15-24 years	36.117	1.4	0.357	0.5	-8.174	-10.3	25.406	5.0	0.090	0.161
Males aged 25-54 years	192.623	6.6	4.730	5.8	-0.031	0.0	43.084	7.6	0.175	0.155
Males aged 55 years & over	142.226	4.0	2.512	2.5	-1.966	-1.8	36.736	5.3	0.052	0.128
Females aged 0-4 years	-688.456	-19.6	-15.475	-15.9	-13.536	-12.8	-125.740	-18.5	0.052	0.105
Females aged 5-14 years	-311.140	-10.9	-8.556	-10.8	-11.366	-13.2	-45.280	-8.2	0.110	0.146
Females aged 15-24 years	-83.029	-3.3	-1.983	-2.8	-2.656	-3.5	-12.551	-2.6	0.104	0.159
Females aged 25-54 years	34.888	1.6	2.170	3.6	0.901	1.4	5.715	1.4	0.182	0.159
Schooling of hh head	9.755	11.8	0.463	20.2	0.753	30.3	0.314	2.0	4.971	3.944
Age of hh head	0.818	2.6	0.024	2.8	0.037	4.0	0.103	1.7	43.140	13.840
Whether hh head male?	-27.406	-2.5	-0.886	-2.9	-1.328	-4.0	-2.970	-1.4	0.876	0.330
District-level variables:										
Average cultivated area per person in village	0.338	5.5	0.006	3.6	0.007	3.5	0.062	5.2	36.596	78.617
Average number of villages in district of residence	0.054	2.9	0.000	0.9	-0.002	-4.0	0.012	3.3	275.338	242.603
Age of village head	-20.149	-21.8	-0.431	-16.9	0.133	4.8	-4.600	-25.7	44.862	3.194
Schooling of village head	11.400	3.9	-0.141	-1.7	-0.732	-8.3	3.921	6.9	8.384	1.704

(continued on next page)

Table 2 (cont'd): OLS Parameter Estimates of Household Nutrient Intakes Per Capita Per Day, Indonesia, 1987

Independent Variable	Calories Parameter	Calories T Ratio	Protein Parameter	Protein T Ratio	Fats Parameter	Fats T Ratio	Carbohydrates Parameter	Carbohydrates T Ratio	Sample Mean	Sample Std. Dev.
Proportion of villages in district:										
that are urban	15.474	0.5	3.848	4.4	-3.154	-3.3	11.015	1.8	0.156	0.266
that are coastal	-162.244	-11.4	-2.814	-7.2	-2.834	-6.6	-34.395	-12.5	0.102	0.211
that have elementary school	-50.125	-1.6	-0.296	-0.3	-5.995	-6.4	2.607	0.4	0.926	0.134
that have high school	-144.673	-4.1	-8.252	-8.4	-10.856	-10.1	-3.683	-0.5	0.376	0.245
that have primary health center	364.944	14.1	11.519	16.1	8.409	10.8	61.168	12.2	0.425	0.240
that have hospital	830.844	8.0	35.417	12.4	15.654	5.0	146.172	7.3	0.036	0.051
that have garbage collection	311.774	10.9	3.590	4.5	3.817	4.4	65.215	11.8	0.168	0.199
that have piped drinking water	166.848	6.6	5.479	7.8	1.670	2.2	35.438	7.2	0.097	0.180
that can be accessed only by water	-231.887	-9.5	-5.051	-7.5	-8.348	-11.4	-39.151	-8.3	0.058	0.142
F Ratio	500.290		509.000		493.630		416.660			
R Square	0.238		0.241		0.236		0.206			
Mean of dependent variable	1940.569		46.761		34.170		360.697			
Std. dev. of dep. var.	663.013		18.403		19.932		125.851			

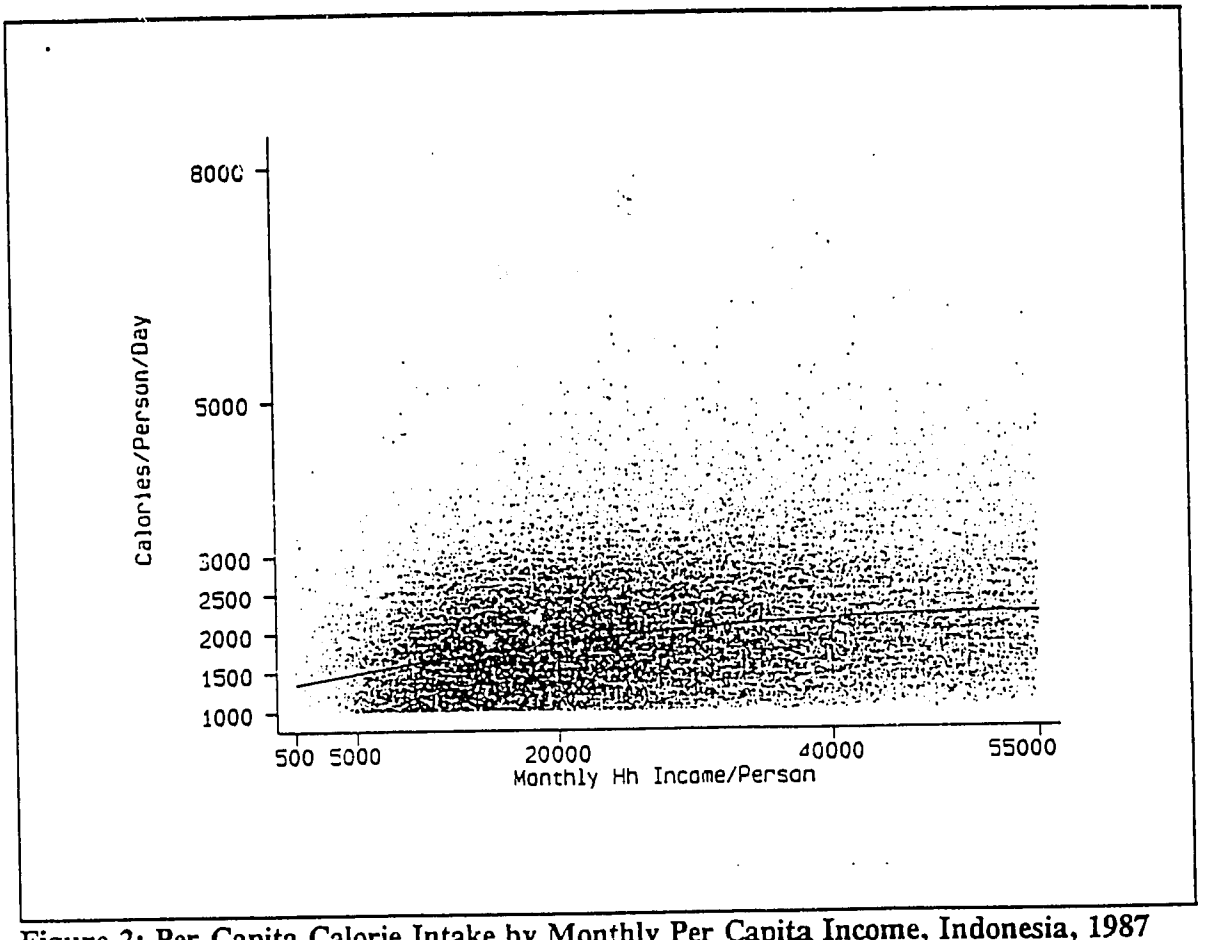

Figure 2: Per Capita Calorie Intake by Monthly Per Capita Income, Indonesia, 1987

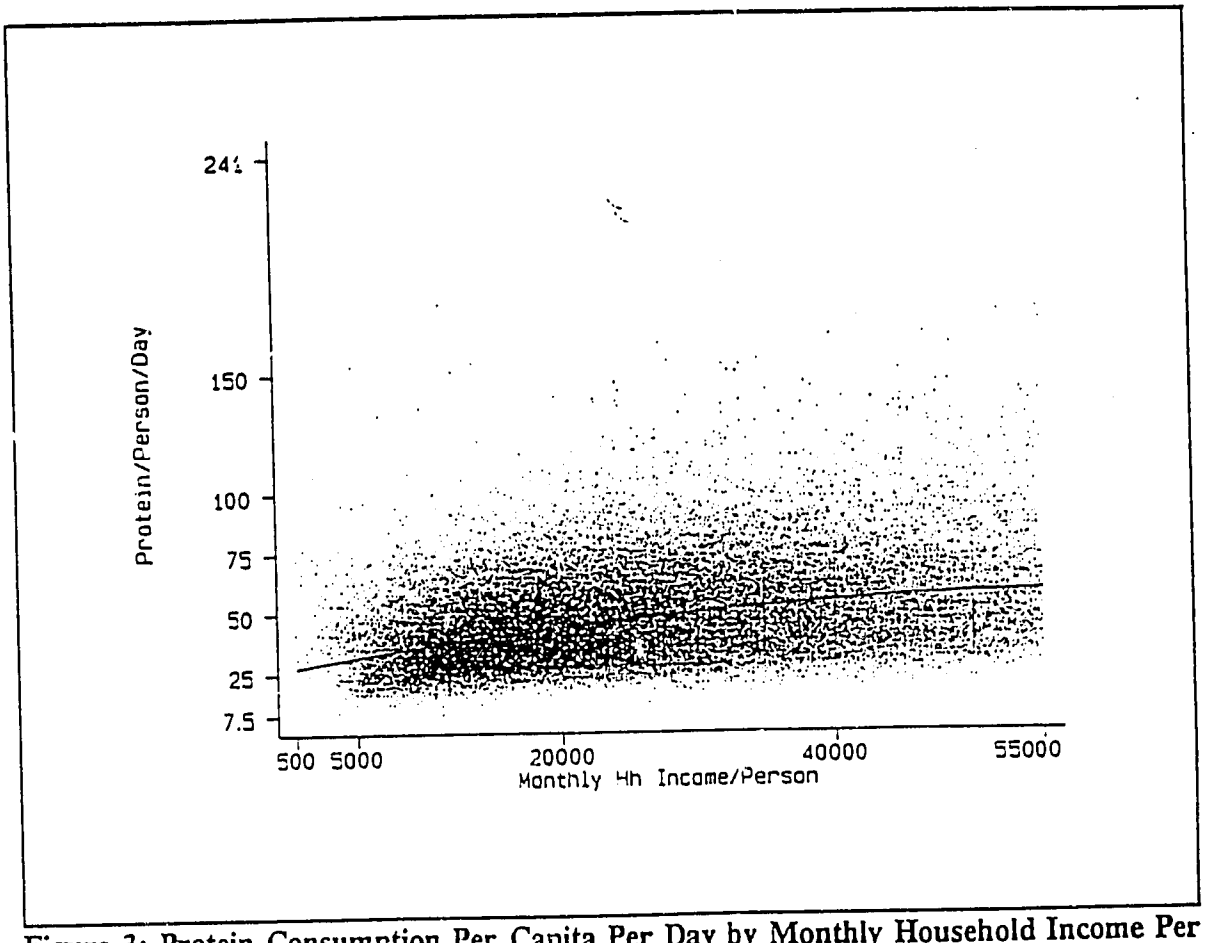

Figure 3: Protein Consumption Per Capita Per Day by Monthly Household Income Per Capita, Indonesia, 1987

Table 3: Income Elasticities of Household Nutrient Consumption Per Capita, Indonesia, 1987

Income Elasticity of:	Per Capita Income Group					
	Poorest 10%	Next 15%	Second Quartile	Third Quartile	Next 15%	Richest 10%
Calories	0.025	0.035	0.046	0.063	0.090	0.185
Protein	0.039	0.053	0.067	0.088	0.121	0.232
Fats	0.069	0.091	0.108	0.131	0.167	0.299
Carbohydrates	0.017	0.024	0.033	0.046	0.068	0.145

Family Size and Composition

Family size and composition have uniformly strong effects on the per capita consumption of all nutrients. In all cases, household size has significant negative effects on per capita calorie consumption, with elasticities of per capita nutrient consumption with respect to household size ranging from -0.15 in the case of calories to -0.25 in the case of fats. The household composition effects differ somewhat across nutrients. In the case of calories, males aged 25-54 years have the highest consumption in the household, followed by males aged 55 and over, males aged 15-24, females aged 25-54, females aged 55 and over, females aged 15-24, males aged 5-14, females aged 5-14, males below 5, and females below 5 (in that order). For children under 14 years, the calorie consumption effects do not differ significantly by gender, although men appear to consume significantly more calories than women in all other age groups. For instance, each additional man in the 25-54 age group raises per capita consumption of calories by 193 calories (or 10 percent at the sample mean),[5] while each additional woman in the same age group increases per capita calorie consumption by only 35 calories (or 1.8 percent). The family composition effects are broadly similar for protein and carbohydrates. However, adult women appear to have the higher consumption of fats than adult men. Females aged 25-54 have the highest consumption of fat, followed by women aged 55 and over, males aged 25-54, males aged 55 and over, females aged 15-24, males aged 15-24, children aged 5-14, and children under 5 (in that order).

These results suggest that adult men and women consume different foods in the household. While men consume more calorie- and carbohydrate-rich foods (e.g., rice) than women, the latter consume foods that are richer in lipids and fats. As would be expected, there are few gender differences in nutrient consumption among children under 15 years of age. It is difficult to make any inferences about intrahousehold discrimination from these figures, since

[5]Since the excluded dummy-variable category is women aged 55 and over, all composition effects are relative to individuals in this group.

we have no information about how energy expenditures vary across adult men and women. For example, the higher energy intakes of adult men relative to adult women could reflect their higher levels of energy expenditure (both in basal metabolic and work-related activities).

Indonesia has experienced one of the most rapid declines in human fertility rates in recent years. For instance, the total fertility rate fell from 5.5 children per woman aged 15-45 years in 1965 to 3.1 children in 1990—a fall of 43.6 percent in 25 years. Rapidly declining fertility results in a household compositional shift away from young children to older children and adults. This means that at least a part of the increase in per capita calorie consumption in Indonesia has been due to the changing demographic composition of households.

Characteristics of the Household Head

Several characteristics of the head of the household appear to have significant effects on nutrient consumption. The results indicate that, after controlling for income, household size and household composition, male-headed households have significantly lower per capita intakes of calories, protein and fat (but not of carbohydrates) than female-headed households. This suggests that female heads may be more informed about nutrition than their male counterparts or that they might prefer to spend a larger proportion of their household income on nutritious foods (relative to other goods) than male heads. Whatever the explanation, the results indicate that, *ceteris paribus*, all household members benefit nutritionally from having a female head. These results are also consistent with other evidence indicating that women spend a larger fraction of their income on child nutrition and health than do men.

The household head's age also has significant effects on nutrient consumption. For all nutrients, older heads have higher levels of consumption per capita than younger heads, again suggesting that older heads are either more informed or more concerned about family nutrition than younger heads.

Finally, the schooling of the household head has very strong positive effects on household nutrient consumption. Interestingly, the elasticity of per capita nutrient intake with respect to head's schooling is largest in the case of fats and protein and lowest for calories and carbohydrates, indicating that more educated household heads shift household food consumption away from calorie- and carbohydrate-rich foods (e.g., rice and tubers) to more protein- and fat-rich foods (e.g., fish, meat, eggs and oils). As discussed earlier, this is exactly the same shift that takes place with increasing incomes.

Community Characteristics

In the standard neoclassical model, the demand for food and nutrients is influenced only by food prices, family income, household demographic composition, and taste shifters (such as

the household head's education). There is no separate role for supply-side variables to influence demand other than through food prices and income.

Urban Residence and Cultivated Land: The results in Table . indicate otherwise. The first observation is that the urban/rural location of a household has very strong effects on all nutrient intakes. Controlling for income and other variables, urban residents have 7.5 percent lower per capita calorie intake and 9.6 percent lower per capita carbohydrate intake than rural residents. The residential effects on fat and protein consumption are much smaller (about 2.5 percent), although still significant. The most likely explanation is that rural residence is associated with greater supply and availability of food, and that these results indicate that the per capita supply of food matters in determining food demand and nutrient intakes.[6] This hypothesis finds further support in the finding that the amount of cultivated area per person in a village has significant positive effects on household nutrient intakes. Again, it is difficult to see what this variable (viz., cultivated area per person) could be proxying other than agricultural production per capita. Both the negative effect of urban residence and the positive effect of cultivated area thus suggest that the per capita supply of food may be an important factor in explaining household nutrient consumption.

Of course, since food prices have not been included in the model, the above results could simply reflect the importance of food prices in determining demand. To the extent that inter-regional trade in food products is less than complete (say, due to high transportation costs resulting from poor transport infrastructure and poor geographical access), increased local availability of food could result in lower food prices and thus stimulate household demand for food and nutrients.

Physical Access: There are two variables in the Village Census that reflect the importance of physical access. The first one is whether the main mode of transportation to a village is by water (as opposed to roads). The results imply that households residing in villages that are difficult to access by road have *ceteris paribus* lower levels of nutrient intake than households residing in villages accessible by road. These results underscore the importance of transport bottlenecks in influencing food consumption. Holding food production (proxied by the availability of cultivated land per capita) constant, road access is observed to significantly raise food and nutrient intakes within the sample.

The other access variable refers to whether a village is coastal or not. Again, households residing in coastal villages are observed to have significantly lower levels of nutrient intake than other households. In the case of calories and carbohydrates, the difference is substantial; households in coastal villages on average consume 162 (or 8.3 percent) fewer calories per capita and 35 gms (or 9.5 percent) fewer carbohydrates per capita than other households. What is surprising is that coastal villages also have lower levels of per capita protein intake than non-

[6]As discussed earlier, the Village Census data do not provide information on agricultural production at the village level.

coastal villages, since one would expect the consumption of fish and seafood to be higher in the coastal regions.

Environmental Hygiene: There is little theoretical guidance as to how the availability of safe drinking water and sanitation facilities affects nutrient consumption. In the standard neoclassical model of food demand, of course, there is no role for water and sanitation to have an effect on food consumption. However, within an expanded neoclassical framework in which households are assumed to obtain utility not from food consumption but instead from health and nutritional outcomes, the availability of water and sanitation might have some effects on the derived demand for nutrients and food. Since safe drinking water and sanitation are most likely complementary inputs in the "production" of health and nutritional outcomes (i.e., the impact of calories or protein on a nutritional outcome like weight-for-age is likely to be higher in communities with good environmental hygiene), households are likely to consume more food and nutrients in communities with safe drinking water and sanitation (as the "returns" to their food intake, in terms of nutritional outcomes, are likely to be greater).

The empirical results strongly support this conjecture. Households residing in communities that have piped water (which is a safer source of drinking water than wells) and where the garbage is disposed of in bins (as opposed to being thrown into a river or left to decay) have significantly higher levels of intakes of all nutrients than households residing in communities without these services. The estimated effects are also quite large; for example, villages having piped drinking water have 8.7 percent higher calorie intakes per capita than other villages. Villages in which garbage is picked up in bins have 16.1 higher calorie intakes per capita than villages having no garbage collection system. The complementarity between environmental hygiene and nutrient consumption thus appears to generate a powerful stimulant to the household demand for food and nutrients.

Health and Educational Facilities: Within an expanded analytical framework in which households obtain utility not merely from the health and nutritional outcomes of their members but also from their educational achievements, the availability of health and educational facilities in a community will also have some (unknown) effects on food demand and nutrient intakes. On the one hand, since health care is likely to be a complementary input to nutrient consumption in the production of good health (i.e., individuals seeking preventive and prompt curative medical care are likely to derive larger nutritional and health benefits from their diet, possibly because of fewer illnesses and infections), one might expect households to consume more food and nutrition in communities where there is greater access to health care. However, there is no such complementarity between the schooling of a child and his/her nutrient intake.[7] In the absence of a strong complementarity relationship, the competition for scarce household resources could imply that, holding income constant, households might substitute child education for food and nutrition and *vice versa*. Thus, for example, greater availability of schools in a community could lead households to spend proportionately more on the schooling and education of their

[7]Of course, in the production of child health outcomes, there may be a complementarity between a mother's schooling and her children's nutrient intakes.

children and proportionately less on food and nutrition. In such a situation, an inverse association between local availability of school facilities and household nutrient intakes could be observed.

The empirical results are surprisingly supportive of this conjecture. The proportions of villages in a *kabupaten* (district) having elementary and secondary schools are observed to have significant and negative effects on most nutrient intakes (with the exception of carbohydrates). These effects are not inconsequential; for example, the presence of a secondary school in a village is associated with a 7.5 percent decrease in household calorie consumption per capita. On the other hand, community health infrastructure has very strong, positive effects on nutrient intakes. The presence of a primary health center in a community is observed to increase calorie consumption per capita in that community by 18.8 percent. while the presence of a hospital increases per capita calorie intakes by a staggering 42.8 percent! The presence of a hospital has even stronger effects on protein consumption (raising it by 74.5 percent). These extremely large effects suggest a strong synergy between medical care and nutrient intakes in influencing health status.

Characteristics of Village Head: The Village Census also provides information on the characteristics of the village chief or head. Interestingly, while the effect of household head's age on household nutrient intakes per capita was observed to be positive, that of the village head's age is negative (with the exception of its effect on household fat intake). The elasticities are large, in the neighborhood of -0.4 to -0.5. Schooling of the village head is observed to have significant, positive effects on calorie and carbohydrate consumption but negative effects on fat and protein consumption. Again, these effects are in contrast to the estimated nutrient effects of household head's schooling, which were uniformly positive. It is difficult to interpret these effects, since the age and schooling of a village head could be associated with a large number of community infrastructure or community development variables.

5. IMPLICATIONS FOR FOOD DEMAND MANAGEMENT

There are four important policy implications that arise from the empirical results discussed in the previous section. First, the very low income elasticities of nutrient consumption —particularly energy intakes—among the Indonesian poor suggest that economic growth, even if it succeeds in raising the incomes of the poor, is unlikely by itself to significantly increase the consumption of calories and other nutrients by the poor. Direct interventions almost certainly will be needed to raise the food and nutrient consumption of the poor in Indonesia.

Second, the results also suggest that a part of the increase in average nutrient intakes per capita experienced by Indonesia may be attributable to the changing demographic composition of the country. Declining fertility and birth rates have resulted in a significant aging of the population. As this process continues, average nutrient intake per capita in the country will continue to increase, as the nutrient requirements of an older population are greater than that of

a younger population. It is important not to erroneously interpret such a trend as an improvement in the Indonesian diet.

Third, the negative effect of urban residence and the positive effect of cultivated area per person on household nutrient intakes imply that the per capita production and availability of food in a community may be an important factor in explaining household nutrient consumption. Of course, these effects could simply reflect the importance of food prices in determining demand. To the extent that inter-regional trade in food is imperfect, increased local availability of food could result in lower food prices and thus stimulate household demand for food and nutrients. Likewise, the results underscore the importance of physical access. Communities that can only be accessed by water and coastal villages are observed to have lower levels of nutrient intake than other communities. Thus, improvements in transport and/or production infrastructure can have important nutritional effects at the local level. This is particularly relevant for Indonesia—a country with a large number of islands and waterways.

Fourth, the results indicate a strong synergy between environmental hygiene, access to health care, and nutrient consumption. The synergy leads to a strong nutritional impact of good environmental hygiene in the community and of local health infrastructure. For example, villages having piped drinking water and garbage collection are observed to have 8.7 and 16.1 percent, respectively, higher calorie intakes per capita than other villages. The presence of a hospital in a community is observed to increase per capita calorie intakes by 42.8 percent and per capita protein consumption by a staggering 74.5 percent! Such strong effects suggest that improvements in environmental hygiene and in health infrastructure could be powerful (and possibly cost-effective) mechanisms for improving food demand and nutrient intakes. This synergy between health investments and food demand has often been overlooked in the past.

REFERENCES

Behrman, Jere R. and Anil B. Deolalikar. 1987. "Will Developing Country Nutrition Improve with Income? A Case Study for Rural South India," *Journal of Political Economy*, 95(3). May.

World Bank, 1992. *World Development Report, 1982*. New York: Oxford University Press.