PN-ABN-642

FINANCIAL MARKETS IN THE GAMBIA, 1981-91

A Report to the USAID Mission
Banjul, The Gambia

(January 1993)

Edited by:

Douglas H. Graham
Richard L. Meyer
and
Carlos E. Cuevas

The Ohio State University
Department of Agricultural Economics
and Rural Sociology
The Ohio State University
2120 Fyffe Road
Columbus, Ohio 43210-1099
Phone: 614-292-8014 FAX: 614-292-7362

FINANCIAL MARKETS IN THE GAMBIA, 1981-91

A Report to the USAID Mission
Banjul, The Gambia

(January 1993)*

Edited by:

Douglas H. Graham
Richard L. Meyer
and
Carlos E. Cuevas

The Ohio State University Research Team:

Douglas H. Graham, Team Leader, Professor of Agricultural Economics, The Ohio State University
Richard L. Meyer, Professor of Agricultural Economics, The Ohio State University
Carlos E. Cuevas, Assistant Professor of Agricultural Economics, The Ohio State University
Stephen Pollard, Consultant, Professor of Economics, California State University - LA
Benjamin Carr, Consultant, The Gambia
Geetha Nagarajan, Post Doctoral Senior Research Associate, The Ohio State University
Mayada Baydas, Research Associate, The Ohio State University
Korotoumou Ouattara, Research Associate, The Ohio State University

The Ohio State University
Department of Agricultural Economics
and Rural Sociology
The Ohio State University
2120 Fyffe Road
Columbus, Ohio 43210-1099
Phone: 614-292-8014 FAX: 614-292-7362

---

* This final version has incorporated the errata sheet that was appended to the December 1992 report.

ACKNOWLEDGEMENTS

The Ohio State University Research Team depended on the generous cooperation of many people and institutions in The Gambia to carry out this study. Most of these people have been recognized in the opening footnote to each chapter for which they were essential to the work. Here we would like to recognize the outstanding cooperation of the staff and secretaries of the USAID Mission, who helped in too many ways to enumerate here. Director Bonnie Pounds was always available and understanding at every stage of our work. Key staff members Sarah Adam, Philip DeCosse and Donald Drga were valuable sources of professional counsel, steering us in the right direction and helping us avoid the wrong ones. Most important of all, we wish to extend our heartfelt thanks to Fred Witthans, a rare colleague and consumate professional, who became a strategic asset to our work as he guided us through many difficult challenges. Of course, none of the above should be held responsible for the opinions here, or possible errors that may remain.

TABLE OF CONTENTS

CHAPTERS

One — Review of Formal Financial Markets in The Gambia 1981 - 1991
Stephen Pollard, Douglas H. Graham, Benjamin Carr and Carlos E. Cuevas

Two — Alternative Financial Networks in The Gambia: The Non-Governmental Organizations
Geetha Nagarajan, Douglas H. Graham and Richard L. Meyer

Three — The Gambia Cooperative Union
Geetha Nagarajan, Douglas H. Graham and Richard L. Meyer

Four — The FAO Input Supply System
Geetha Nagarajan and Richard L. Meyer

Five — Alternative Financial Networks: The Village Savings and Credit Associations (VISACAs) in The Gambia
Korotoumou Ouattara, Douglas H. Graham and Carlos E. Cuevas

Six — Alternative Financial Networks: The Small Scale Enterprise Sector in The Gambia
Mayada Baydas, Douglas H. Graham and Carlos E. Cuevas

Seven — Commodity and Financial Flows Through the Fertilizer Marketing Channels
Geetha Nagarajan, Richard L. Meyer and Douglas H. Graham

Eight — Commodity and Financial Flows in Food Commodity Markets
Mayada Baydas and Richard L. Meyer

Appendix — Roster of Individuals and Institutions Consulted during Field Work for this Study

FINANCIAL MARKETS IN THE GAMBIA, 1981-91

EXECUTIVE SUMMARY AND OVERVIEW

Formal and informal financial markets in The Gambia are made up of many segments. Banks, cooperatives, village savings and credit associations, non-governmental organizations, private traders, suppliers, and microentrepreneurs all operate as intermediary/agents in The Gambia and are investigated in varying degrees of detail in this study. Each is important in providing some financial services to businesses or households. Both quantitative and qualitative data were collected and analyzed on the activities of these financial agents. The major questions addressed are the magnitudes of these financial activities, the nature of the financial services offered, the markets in which they operate, the clientele served, the terms and conditions of their financial services, and the efficiency of their financial operations. Of particular interest here is documentation of the performance of these agents and identifying factors that have shaped their performance in the past decade. How has the liberalization of financial markets and the introduction of a treasury bill market altered the composition of assets in the banking industry? What implications emerge from this restructuring of the banking sector? Finally, what alternative networks of financial intermediaries and agents currently operate in rural financial markets and what is their potential for supplying financial services to rural Gambia?

1. The Formal Financial System

The formal banking system in The Gambia is reviewed in the first chapter. At the same time, we analyze how monetary policy has conditioned the performance of this system by changing the structure of interest rates and reallocating assets between loan and non-loan activity. The trends in total credit balances and the shifting roles of public and private sector credit activity are also documented. Term lending and interest rate controversies are also explored along with the financial performance of the banking industry.

The principal findings of this chapter can be summarized in five major areas: (1) the predominant changes in the pattern of financial balances in the past decade; (2) the high social costs of institutional failures growing out of an unstable market structure for banking in The Gambia; (3) the impact of the stabilization and privatization drives on financial deepening and financial intermediation; (4) the issue of savings mobilization; and (5) the collapse of rural finance and the implications of this urban bias for future donor development policy.

A. Decadal Patterns

Dramatic changes occurred in financial markets in the past decade as the overall financial market shrank dramatically over this period. This was largely due to the rapid decline of lending in the country's largest bank, the Gambia Commercial and Development Bank (GCDB). The remaining private commercial banks experienced approximately a one-third decline in their outstanding balances in real terms over this period. There was also a shift from public to private sector banking and from long to much shorter term lending. In the early 1980s, a supply leading financial development strategy predominated and created a preponderance of public sector credit flows in the formal financial markets of that time. By the early 1990s, public sector loans through the GCDB and its downstream network had largely disappeared, and private commercial bank lending emerged as the only viable financial intermediaries functioning in the country.

Agricultural lending collapsed from its predominant role of 30 to 35 percent of total lending in the early 1980s to 7 to 8 percent by the early 1990s. In contrast, loans for trading enterprises rose from around 20 percent to about 30 percent of total outstanding balances within the smaller scale financial market of the early 1990s. The decline of agricultural lending was directly associated with the decline of the GCDB and the failure of the supply leading financial development strategy.

In recent years, large interest rate margins have emerged in Gambian financial markets along with high rates of return on assets and equity by financial institutions. With the liberalization of financial markets freeing interest rates, a wide margin emerged between average loan and deposit rates creating one of the widest gross interest rate margins in Africa (19 points). Among other things, this increased the profitability of banking and attracted a number of international banks to apply for charters in The Gambia. At the same time, these wide margins created a high loan rate milieu that some allege discouraged investment lending. Hypotheses are tested on the determination of interest rates in The Gambia and associated implications explored.

B. Market Structure and Institutional Instability

Bank instability and institutional failure stands out as the second major issue in The Gambia's financial markets. Four banks failed in the past 10 years and a fifth is under litigation. Only two banks have passed through the past 10 years free of financial problems. Clearly, the bank charter review process of the Central Bank and its supervisory functions could be strengthened to reduce this market instability.

The failure of the Agricultural Development Bank (ADB) and the Gambia Commercial and Development Bank (GCDB) were costly to Gambian society in two ways. First, the defaults and frequent write-offs during the decade have been substantial. While low income beneficiaries comprised some of this failed portfolio, nevertheless, a relatively small number of borrowers with substantial loan size obligations also made up an important

part of this defaulted portfolio, thereby contributing to a regressive distribution of income and wealth in the country through these defaults. Second, to clean up the books of the GCDB, the Gambian government has been forced to issue approximately 80 million dalasis of treasury bills to induce an international bank to take over the deposit obligations of the GCDB in 1992. In addition to handsomely benefiting the new bankers, this action imposed future burdens for Gambian taxpayers.

When the income distribution implications of these transfers are added to the income distribution implications of a negative real rate of interest environment for savers for most of the past decade, one has to conclude that the net impact of the formal financial markets in The Gambia was to generate a regressive distribution of income in the country.

The impact of the Economic Recovery Program (and ensuing structural reforms) on financial markets has been dramatic and constitutes another important issue in financial market development. Reforms liberated interest rates and caused a reduced demand for loans. Institutional reforms to reduce subsidies and the fiscal deficit reduced lending to perennially heavy borrowers such as the Gambia Produce Marketing Board (GPMB) and the Gambia Cooperative Union (GCU) further scaling back the loan market. Both these reforms were legitimate and long overdue and, in the process, reduced the loan market to a size more commensurate with a solvent clientele.

C. Impact of Stabilization and Financial Liberalization

Stabilization measures to control the inflationary impact of donor grants and loans, however, have caused a crowding out effect in the asset portfolio of banks. The attractive interest rates negotiated to induce banks to purchase risk free T-bills has reduced their willingness to pursue borrowers. Loans account for only 25 percent while T-bills represent around 42 percent of total assets for the private commercial banks operating in The Gambia in the early 1990s. Thus, financial liberalization and economic stabilization have not promoted financial deepening; crowding out has reduced the scale of financial intermediation through the loan market. However, one must recognize that the size of the loan market was exaggerated in the early eighties. Much of the volume of outstanding balances at that time were implicit grants that later became defaults. In short, the financial market of the late 1980s and early 1990s more accurately reflects the true size of a solvent loan market. Still, the crowding out effect discussed above is a real concern. It represents a continuing process reducing the scale of the private sector loan market in The Gambia. This process could be ameliorated by drawing more on domestic taxes rather than foreign donor grants to cover budget deficits and introducing more competition in the T-bill market.

D. Lack of Incentives for Savings

Another problem of financial development during this period was the weak incentives for savings mobilization. To the extent that loan markets remain limited, there will be little incentive for banks to encourage savings mobilization. Savers have been penalized with

negative real rates of interest for most of the past 10 years and savers in rural areas have been largely excluded from formal financial services altogether. Some savers reported losses due to the failure of the ADB and the savings cooperatives of the GCU in the late 1980s.

E. Urban Bias in Banking

Finally, an extreme urban bias became apparent in financial markets by the early 1990s. Agricultural lending has declined precipitously; the major rural bank had disappeared as an active lender; the agricultural linkages to the banking sector through the Gambia Cooperative Union (GCU) have been substantially reduced through downscaling. Finally, the natural heirs to the financial system, the private commercial banks, have no extensive branch network in rural areas to service rural depositor-savers, nor any direct agricultural loan portfolio.

Restructuring the banking system and liberalizing financial markets have produced a much smaller, leaner, and more resilient system dominated by private commercial banks. While this is in many ways a necessary and inevitable step toward sound banking in The Gambia, this change does very little to help rural Gambia. Private commercial banks located in Banjul cannot be expected to supply rural Gambians with financial services except as a wholesaler working through other agents.

The challenge facing Gambian authorities now is to expand and broaden financial intermediation beyond the mere transfer of private deposits into government securities. More attention must be given to promoting the institutional innovations and strengthening the supervision and regulatory functions necessary to broaden the market for financial services. In this regard, non-governmental organizations (NGOs) are a possible option. NGOs have begun to fill the vacuum in rural areas created by the disappearance of formal finance. The degree to which NGOs can satisfactorily fill this vacuum and supply these services is an open question, explored in some detail in the rest of the report.

2. The Non Governmental Organizations (NGOs)

A. The Setting

The second chapter documents the financial activities of non-governmental organizations (NGOs), especially in rural areas. The large number of NGOs with diverse operating policies and financial technologies has created confusion in rural financial markets. At the same time, uncertainty permeates the discussion of appropriate coordination and regulatory measures required to shape the growth of these institutions as fledgling financial intermediaries in rural Gambia. Chapter Two explores these issues at length.

The Central Bank of The Gambia (CBG) is the appropriate institution to regulate and monitor financial institutions in The Gambia. Although the CBG has the power to regulate the NGOs, current prudential regulations have been formulated more for banks than for client-owned institutions without an equity base. The laissez-faire approach to NGOs has resulted in negative externalities in financial markets and increased the potential long-run social costs of institutional failure. In the past, the inconsequential role of the NGOs as financial intermediaries led to a lack of interest by the CBG toward regulating these small and scattered organizations. Since the NGOs are becoming increasingly active in financial markets and since their share of lending in financial markets has become more significant, it is time to reconsider this position.

B. Regulatory Issues

The Agricultural Credit Unit (ACU) of the Central Bank does conduct regular dialogues with NGOs to explain and promulgate its policies on interest rates, linking loans to savings and encouraging coordination among the various NGOs. This has been a valuable service, however, recently the ACU has taken actions that go beyond the role of regulator and counselor by designing and promoting a number of local level associations. While one can sympathize with the ACU's concern to help these fledgling associations start out on the right track, it has to avoid pushing this role in the future. Designing and assisting in the promotion of local level savings and credit associations is clearly an inappropriate role for a regulatory unit to be engaged in. This activity would create a conflict of interest. The regulator is expected to act impartially and objectively in its regulatory responsibility. It would be contradictory to expect a regulator to act impartially in its regulatory action concerning an association it has been partially responsible for having created in the first place. It would appear that the Central Bank has recently reviewed these initiatives and has correctly resisted any further moves in this direction.

On the other hand, TANGO (the Association of Non-Government Organizations) along with parent NGOs should have a comparative advantage in carrying out the developmental role that is currently needed to promote local level client owned savings and credit associations. At the same time, TANGO could eventually function as a second level federation, as a lobby for NGOs, and as a forum for discussing problems and lessons learned through diverse NGO financial programs. TANGO should not be a regulator. To ask TANGO to regulate NGOs (as distinct from training, technical assistance, and information dissemination) is, in effect, allowing regulatees (those who are regulated) to be the regulator. The conflict of interest inherent in letting TANGO serve as a regulator is obvious. Therefore, while the CBG should perform the role of regulator, TANGO or a comparable institution should assume the developmental responsibilities mentioned above. It is clear that TANGO is not currently equipped with a staff (in number or in training) to carry out these comprehensive responsibilities adequately. It would be helpful if donor agencies would commit themselves to a more serious effort to strengthen the staff of TANGO to carry out these service functions. Chapter Two concludes with a detailed set

of recommendations for regulatory criteria for the CBG and operational guidelines for NGOs in The Gambia.

3. The Gambian Cooperative Union (GCU)

Chapter Three summarizes the recent history of the multipurpose Gambia Cooperative Union (GCU). Particular attention is paid to its performance in input supplies, lending and savings mobilization since its reorganization in 1988. It's strengths and weaknesses are identified.

A. Implicit Strengths

The GCU has undergone several changes since its reorganization in 1988 and the results have been noteworthy. On the one hand, it has an established widespread marketing network in the country, has instituted tighter loan qualification criteria, has reduced its staff and has charged market rates on loans made in the recent liberalized environment. Its specialization in output, input and financial markets has produced some comparative advantages to allow it to record a better performance in some areas over competitors such as the Gambian Produce Marketing Board (GPMB), the FAO fertilizer distribution network, and the NGOs. On the other hand, with its continuing loan recovery problems, its reliance on subsidies in the form of interest-free Agricultural Development Program II (ADP) loans, and the challenge of continued subsidized competition in groundnut marketing from Senegal, it is not clear that it can become a viable and self-sustaining source of financial services.

Its long experience as an output buyer combined with an established infrastructure in transport and manpower are the strong points of the GCU. Furthermore, access to external funds from the local banks aids its output marketing operations because it can implement marketing strategies which pay farmers in cash with a minimum of delays and with low transaction costs. The large number of local multi-village Cooperative Produce Marketing Societies (CPMSs) create a large network with a wide geographic coverage that also mitigates the covariance risks of crop failure. Indeed, these strengths helped the GCU to retain its position as the major domestic buyer of groundnuts in 1992 relative to Gambian traders and the GPMB, a rather unusual year for Gambian output markets. However, the GCU could not compete with the subsidized Senegalese traders due to large groundnut price differentials and this fact undoubtedly contributed to some of its loan recovery problems.

The GCU's ability to provide access to high quality inputs is facilitated by its large retail network, transport and other facilities, such as storage depots and access to interest free loans from the World Bank's ADP II revolving fund. In 1992, these factors helped reduce its fixed costs so it could supply inputs at a lower price than its major competitor,

the FAO. Furthermore, its recent entry into import markets allowed it to import fertilizer from Senegal and offer competitive input prices to its clientele.

More strict credit discipline has been introduced under its new credit program. The number of CPMSs and village branches, that qualified for the credit program by repaying more than 95 percent of their overdues, has increased. The village committees formed under the Village Responsibility System (VRS) have been active in borrower screening, loan disbursement and enforcing contracts. As a result, the loan recovery rates have been high in years with good weather and less Senegalese intervention in groundnut markets. The charging of market interest rates to CPMSs and to farm borrowers compare favorably to those charged by the FAO and NGOs engaged in fertilizer loans.

B. Problem Areas and Weaknesses

In spite of these strengths, the GCU has several weaknesses and problems. For example, the absence of crop diversification increases the covariance risks inherent in concentrating its activities in groundnuts; therefore, it is more vulnerable to weather and other risks than it would be if it had more diversified activities. Also, its sales of seed, fertilizer and other inputs are weakened by a heavy dependence on foreign suppliers, especially for fertilizer. It may not be remunerative to reduce foreign dependency by building fertilizer production or mixing plants in The Gambia; however, it should be possible to develop seed multiplication units to engage in research and multiplication of quality seeds.

The credit activities of the GCU were the primary focus of this study and they reveal several problems. While the number of CPMSs and village branches that qualified for the credit program increased over the past four years, their geographic distribution has been skewed and this affects access to loans by members in less politically influential areas. There are problems in enforcing loan contracts due to droughts and intense competition for groundnuts from Senegal, along with limited emphasis on collateral and borrower education. The GCU has not developed risk reducing mechanisms, such as crop and enterprise diversification and collateral substitutes other than output-tied contracts. Therefore, while recovery rates were high during the one good year after the 1988 reorganization, they have been relatively low in the two successive years. Although the loans consist of in-kind and cash components, they are supplied only for production, storage or processing purposes without considering the fungible nature of credit. Furthermore, the cash component is uniform across all borrowers regardless of risk or the area or crops cultivated.

The serious constraint that the GCU has faced in its supply of funds for lending has required it to ration its loans. But the criteria used to ration loans among new and old CPMSs have been ambiguous and it is not clear how loans are rationed among individual borrowers. In other words, it is not clear if the GCU has successfully adopted a "learning by doing" technique in supplying loans to old and new clients whereby repaying borrowers get new and larger loans while those with poor repayment receive no loans or only small

loans. The emphasis on groundnuts has rationed access to women clients that traditionally engage in growing food crops. To ease its resource problem, the GCU has initiated a deposit program to improve local participation in GCU's activities. Awareness is being created among farmers regarding the mobilization of deposits, but the GCU has yet to develop attractive operational procedures to mobilize deposits. The current program that offers only an eight percent annual interest rate for fixed deposits and zero percent for current accounts is not an attractive program for savers. Whereas it may not be possible for the GCU to offer higher rates than this with its current risky portfolios and trends in loan recovery rates, it could emphasize nonprice services including assured loans for savers.

These problems of operating losses and poor loan recovery pose a serious problem for the survivability of the credit program of the GCU. If these problems are not resolved, the ADP II fund will be exhausted. There will be no balances left to revolve into new loans. This will force the GCU to modify its operations, limit its scope, and perhaps drop its lending operations entirely. This would likely further erode its support among farmers.

Our scope of work was limited to GCU financial activities so we could not undertake a comprehensive review of its operations. It appears, however, that the GCU has a serious income problem. The audited financial statements of the GCU during the 1979/80 to the 1989/90 period reveal that losses were reported in 9 out of 11 years. The cumulative total losses were D43,181,000 compared to D4,110,800 in cumulative profits (10 percent of the total losses). Therefore, it must be the case that an important factor explaining the GCU's cash flow problems and its need to ration loans to CPMSs and farmers is its continuous losses. This factor plus the loan recovery problem means that the GCU simply does not have the resources to service the loan demand for its members. This problem has at least two important implications. The first is that farmers and CPMSs are likely to stop repaying loans if they conclude they will be rationed out of new ones or will receive much smaller loans than desired. This may be an important factor explaining the decline that has occurred in loan recovery. The second is that the savings mobilized from members will be lost as they are channeled into paying GCU operating costs. Given the limited opportunities to save in rural areas, it would be logical to recommend that the GCU use its network to aggressively mobilize deposits. With its operating losses, however, that would not be a prudent recommendation because of a possible loss of savings.

The GCU has recently made an effort to become a viable and efficient operation in the post reorganization period, but it has not been able to overcome certain obstacles. Two major problem areas are subsidized foreign competition and drought. In the post reorganization period, the GCU competed well against several domestic agents, (NGOs, the GPMB and the FAO), but has been unable to overcome drought related production problems and aggressive subsidized competition from Senegal. Put differently, if there would have been no reorganization, the old GCU would likely have collapsed much earlier in the face of these adverse conditions.

C. Recommendations

Given the various output buyers and input suppliers that sell on credit, and the unviability of several CPMSs, the GCU should consider scaling down its operations, reducing its overhead expenses, and limiting itself to a smaller number of well-functioning CPMSs and village branches. This downscaling implies that all nonperforming CPMSs out of the present 54 CPMSs would be closed. Otherwise, with declining ADP funds, the GCU will be forced to supply ever smaller sized loans with declining purchasing power, thereby reducing the value of its loan services. This would very likely negatively affect the incentives for good repayment from early qualifiers who, in effect, might feel they are not being properly rewarded for being the best CPMSs in the network. The nondiscretionary expansion of the CPMS network based only on the 95 percent recovery rule has in recent years brought in weaker CPMSs from the pre 1988/89 period who took three or four years to pay off their pre-1988 debts, and thereby penalized early qualifiers through a reduced volume of lending from 1988 onwards. This has introduced moral hazard into the system. The criteria to select the CPMSs that remain with the GCU should, therefore, be based on: (i) the ability of the CPMS to recover at least 95 percent of its current loans made after reorganization for at least two years; (ii) the CPMS capability to purchase groundnuts from the GCU at least to some break-even level; and, (iii) the capacity to mobilize deposits.

To survive, the GCU must develop a reserve fund during good years to be drawn upon in the event that high Senegalese prices and/or poor harvests are encountered again. It is unfortunate this had not been done earlier. The GCU needs some assurance of access to groundnuts if it is to be able to compete and ensure the recovery of its fertilizer loans. Otherwise, with porous borders and informal trading arrangements, it is not possible to prevent cross-border trade between The Gambia and Senegal. The 1991/92 situation is evidence of this. The large groundnut cross-border sales into Senegal could have been prevented if the GCU or the GPMB would have offered higher prices to compete with the Senegalese through drawing down a previously built up reserve fund. While the GCU/GPMB need not necessarily exactly meet the Senegalese prices to compete due to transport cost differences and uncertainties in the timeliness of Senegalese payment practices, the price differential in 1991/92 almost reached 50 percent. As a result, although the farmers were not affected, the GCU suffered because of low output purchases. Furthermore, loan recovery rates were estimated to be 53 percent, lower than in previous years since the input-credit operations are linked to output marketing to ensure loan repayment. In short, the GCU lost its comparative advantage to enforce loan contracts tied to output marketing.

If the GCU accepts the challenge of launching a savings mobilization program to improve the GCU's internal funding position, it should adopt the following practices. While linking savings proportionately to loans received by members is not required, it should be mandatory for farmer members to save with the GCU. The GCU should, however, pay positive real interest rates on the deposits held as fixed deposits irrespective of the amounts deposited. The village branches and the CPMSs should be given authority to use the funds

held at their levels, although the GCU should monitor and supervise them. The village branches and the CPMSs, especially those that are unqualified for the credit program, might use these funds to buy fertilizer from the GCU on a cash basis to sell to their members. The GCU should also explore ways to attract non-member deposits, including NGOs and women, to expand its pool of funds. In the absence of formal bank branches in the rural areas, the GCU could consider repositioning itself to operate as an alternative formal financial intermediary.

While the GCU must continue to tighten its internal operations and bear the consequences of its mistakes, it is obvious that it faces serious external challenges over which it has little control. There is no level playing field among institutions operating in various markets in The Gambia. In particular, the GCU cannot be expected to compete on an uneven playing field caused by policies in neighboring countries over which it has no control. Although the GCU has received subsidies, especially interest-free ADP II funds, and enjoys an infrastructure and a network of CMPSs that gives it some advantages, it is faced by subsidized competition from the NGOs and the FAO fertilizer program in the input and credit markets and Senegalese traders from the output market side. Not only does this affect the volume of GCU's marketing operations, but it also has a spillover effect in reducing the recovery rate on input loans by weakening its contract enforcement mechanism through its marketing role. It cannot continue as a financial institution if it cannot enforce its loan contracts. Although it's performance is problematic in spite of recent reforms, it would be premature to try to decide now whether or not it is appropriate to close the GCU or provide it with additional government or donor support. It would be preferable to monitor its performance for another two or three years until the ADP funds are exhausted. In the meantime, ways need to be explored to address the issue of groundnut pricing between The Gambia and Senegal. If The Gambia is to pursue a market economy, donor pressure should be exerted on Senegal to encourage it to also follow competitive and unsubsidized pricing policies.

4. The FAO Agricultural Input Office (AIO) Supply System

The FAO in collaboration with the Agricultural Input Office (AIO) of the Ministry of Agriculture has developed an extensive role in fertilizer importation and distribution. This is evaluated in Chapter Four. Its role in facilitating privatization of the distribution network is reviewed along with its attempt to introduce a loan program through its private dealer network. The FAO has played an extensive role in developing fertilizer sales. It is anticipated that the FAO project that has supported this work will end as part of the privatization process for the fertilizer sector. If that happens, it is important to consider the policy options that may exist for the government. Two scenarios are considered in our evaluation. Scenario one represents a rapid shift to a completely privatized sector. The second scenario represents more of a gradual reduction in the intensive role that the FAO/ AIO have played, but assumes that the MOA (Ministry of Agriculture) will continue some

level of support to the private sector agents involved in the sector. The selection of which scenario to pursue depends on governmental decisions about: 1) how much of the fertilizer trade it will leave to the private sector; 2) what capability the GCU has and/or will develop in supplying inputs to farmers; and 3) the investment the government will make in supporting public sector involvement in some aspect of the fertilizer sector. The nature and extent of future donor involvement, especially the FAO, will undoubtedly shape these decisions.

A. The First Scenario

The objective of scenario one is to get the FAO/AIO out of fertilizer importation and distribution as soon as possible, and attempt to accelerate full privatization of the sector. No assumptions are made about the nature of the primary agents that will evolve in the sector. They could be cooperative; they could be private. It only assumes that the governmental agencies do not have a comparative advantage in the fertilizer trade. There are three primary components to this scenario.

First, the current balance of the revolving fund might be converted into a Guarantee Fund perhaps located and managed by one of the local commercial banks to encourage banks to make loans to private traders who would be expected to move into fertilizer marketing. Strong efforts will be made to collect the balances due by the PDs. However, this may not be very successful if the PDs learn that there is no assurance that they will get new fertilizer stocks if under this scenario they pay their current obligations. Therefore, the government and/or the donors should review the possibility of augmenting the size of the Fund if, as reported, the revolving fund balance is small. The donors might want to support a project to absorb a specific portion of the potential losses of the guarantee fund.

The Fund would be used by the domestic bank to guarantee loans made to any agent (GCU, PDs, private groundnut traders, NGOs) that operates in the fertilizer sector: importer, wholesaler, retailer. Any commercial bank in The Gambia that agree to the terms and conditions of the Fund could receive guarantees for the loans made. The objective of the Fund would be to accelerate the learning process of the domestic banks by reducing their risk of lending to these borrowers. The expectation is that because of the guarantees banks will use their existing resources (discussed in Chapter I) to make some fertilizer loans that otherwise they would not make because of their risk perceptions. The guarantee should also encourage banks to charge a lower risk premium in their loan rates for the fertilizer loans made.

Specific terms and conditions would need to be established for use of the Fund, including the percentage of guarantee cover, procedures to access the guarantee fund, the standards that guaranteed loans must meet, and a fee structure designed to make the Fund self-sufficient. An Advisory Committee to the Bank could be created including representatives of the banks, traders, MOA, and donors, if they provided funds and shared the risk.

Farm loans could be guaranteed but because of the limited bank branch network in the country, it is not expected that many farmers would incur the transaction costs of trying to get a loan. Rather it is expected that by lending for the working capital requirements of agents in the marketing channel this liquidity will pass down the channel so that retailers will be encouraged to sell fertilizer to farmers on credit. The retailers are located close enough to the farmers so they have a better chance than banks to successfully screen farmers and determine creditworthiness. Obviously, retailers will have to learn to do a better job of lending than has been done by many of the PDs to date.

This scenario does not contemplate an ongoing role by AIO in developing and maintaining the PDs and the PDA, because there is no certainty that any of the agents (private dealers or cooperatives) that will expand into the fertilizer trade will choose to use any of the PDs to form part of their retail network. The fertilizer importers and wholesalers will each need to develop their own markets. They may decide to do business with some of the better PDs or start from scratch with their own agents. They may decide to accept the risk of continuing the consignment approach, or reduce their risks by choosing to sell fertilizer on credit to those dealers they determine are most creditworthy.

Since this scenario assumes that the AIO will not actually handle input stocks in the future, the current fertilizer inventory should be auctioned off along with any equipment that might have been acquired for this program. The bookkeeping accounts will need to be evaluated for each PD, an attempt will need to be made to collect delinquent payments, and a determination made to write-off uncollectible debts. Any substantial inventories with PDs should either be paid for or returned to AIO depots for sale.

There are several activities that the Department of Agriculture should continue to implement and some of them could be logically supported by the FAO and/or other donors. First, strong programs are needed to acquire and test seed varieties, measure fertilizer yield response, and evaluate optimum rates and types of fertilizer application. This information should be disseminated to farmers to help them with their fertilizer use. It should also be disseminated to the dealers so that they can augment the extension function by transmitting information to their farmer customers. Second, it may be useful to implement business development programs for private dealers in the fertilizer sectors. These programs could disseminate information about the FAO/AIO experience in importing and distributing fertilizer. They could also teach the basic rudiments of business management (accounting, finance, etc.) to small sale firms.

There are several implications with this scenario. There may be temporary disruptions in fertilizer supplies as the current distribution system is replaced by the new privatized one. Fertilizer prices and interest rates for fertilizer loans will rise as the remaining subsidies are eliminated. Some of the current PDs will no longer be involved in fertilizer retailing. The losses that have occurred in operating the current program, which are currently difficult to observe, will become transparent when the size of the remaining revolving fund is known.

B. The Second Scenario

The objective of a possible second scenario is to privatize parts of the fertilizer sector but leave a more active role for an appropriate entity in the Ministry of Agriculture (MOA). The guarantee fund is created in the same way as proposed in scenario one but there may be a possibility for some remnants of the PDN to receive guaranteed loans in addition to the other agents already identified.

This part of the scenario is most problematic. The fundamental issue is whether or not the Department of Agricultural Services will decide to more fully integrate the AIO into its operations and provide it with adequate staff and resources once the FAO project ends. As described above, the AIO currently seems to be largely a donor-funded appendage that is not fully integrated into the Department. The Department must also decide if it wants to support the PDN as currently designed, in which fertilizer is supplied on consignment, or if it wants to convert the PDs into truly private dealers who will buy and sell inputs according to their market opportunities. The former implies that the AIO would continue to bear the risk of acquiring and distributing inputs. The latter alternative would transfer much of this risk to the private sector. If it chooses the latter alternative, the AIO will have to maintain a capacity to store and transport inputs and distribute them to a strengthened PDN. The PDs, however, would be developed to operate as viable, independent retailers that could acquire inputs from any source. Presumably, the AIO would acquire inputs through traditional lender operations. Resources would need to be acquired to pay for the fertilizer stocks and the operational costs of the office, either through budged allocations or donor funds. The AIO would need to develop a capacity to undertake all the tasks now done by the FAO personnel.

Regardless of which scenario is chosen, the importation and distribution system for fertilizer will have to undergo substantial changes. Privatization implies that the private sector will have to play a more significant role, and will have to be renumerated for the resources used and the risks faced. This implies higher fertilizer prices in the future. As will be argued in Chapters VII and VIII, there are some reasons for optimism about the future role of the private sector. There are, however, serious problems that must be addressed before a completely self-sufficient privatized system will emerge.

5. The VISACAs

Chapter Five documents the performance of the Village Savings and Credit Associations (VISACAs) in the Sapu region. These associations are affiliated in part with the Ministry of Agriculture and the Jahally Pacharr Rice Project in this region. They are further assisted by a Resident Advisor supported through a French NGO (Centre International de Développement et de Recherche, CIDR) in cooperation with the Kreditanstalt fur Wiederaufbau (KFW) of Germany. Important organizational and operational technologies

are highlighted in analyzing the functioning of these associations which successfully supply a range of financial services. The unique form of donor intervention is discussed and the prospects for new directions for the future are outlined.

Local savings mobilization was the single most important feature behind the VISACAs success from its inception in 1988. This feature quickly established the legitimacy of these young associations. It meant that villagers controlled their own association, guaranteed their autonomy in decision making and introduced a moral authority for responsible loan administration and loan recovery of their own funds. These locally mobilized funds created the environment for local village assemblies to meet and discuss such questions as the composition and responsibilities of the management committees, interest rate policies, and savings instruments. The results of these efforts are clear as all VISACAs have recorded loan recovery rates between 92 and 97 percent and as a group earned an annual rate of return of 26 percent on their loan portfolios.

Six important operational features have shaped the positive performance of the VISACAs since their inception. First, the depositors were paid positive real rates of interest on their savings and borrowers have paid positive rates on their loans. Moreover, the effective interest rates are higher than those earned and paid in the formal financial markets of The Gambia in Banjul. This is an important lesson underscoring the fact that rural borrowers in fact can and will pay 20 to 30 percent interest rates on 6 month loans (based on 40 to 60 percent annualized rates). On the savings side, depositors in the VISACAs earn substantially more on their savings than do depositors in formal banks. Six month deposits (the most commonly held deposit instrument) earn either 10 or 15 percent interest (based on annualized deposit rates of 20 to 30 percent). Banks at best pay 12 to 14 percent annualized interest on time deposits.

Second, VISACA loans are not targeted. Since outside money played no initial role in the funding base for on-lending, villages had the autonomy to decide whether loans should be targeted in any way or remain untargeted with management committees servicing loan requests on a first come, first serve basis. They decided on the latter course of action with positive results in the end as a diversified loan portfolio contributed to high loan recovery rates.

Third, short-term loans of six months or less have predominated in the VISACAs. Just a few loans beyond 9 months have been made. Among other things, this implies that trading activity, artisan activities and handicrafts, and other non-agricultural activities will necessarily have to play an important role in any village banking initiative. These activities generate value added in their own right, are more suited to shorter term finance and can cover the interest rate charges with their earnings. Nevertheless, some farming loans are made, especially to the rice irrigated farmers who benefit from a two harvest season. More importantly, farm families are involved in many of the off-farm and non-farm activities mentioned above and clearly benefit from VISACA loans. Forcing targeted loans into what are misleadingly called "productive" activities is a misplaced and counterproductive effort

often pushed by donors. It is refreshing to see the VISACAs have not been subject to this form of donor intervention.

Fourth, the VISACAs have managed their assets and liabilities intelligently by carefully matching the term structure of loans and deposits to meet liquidity demand. This is an extremely important lesson that should be followed by all village based savings and loan initiatives. These organizations must calibrate the cash flow derived from their loan repayment schedules to meet the term schedule of deposit withdrawals. Among other things, this implies that several deposit instruments should be offered so that several loan term maturities can be offered to meet loan demand. The VISACAs have shown that a safety cushion should also be programmed into this term matching to allow for the fact that some loans may be repaid with delays. Hence, loan maturities are typically issued for slightly shorter terms (usually by about one month) than the deposit term obligation supporting them.

The fifth operational feature that comes out of the VISACA experience is the important role of collateral. Farm equipment and livestock were the typical forms of collateral pledged by borrowers. Management committees take these pledges responsibly and will take possession of the collateral of seriously delinquent borrowers. The important lesson here is that the credibility of local enforcement of collateral obligations will only work when loans are based on local savings and when local officials support these actions as ethical and proper. It would appear that the threat of taking collateral is sufficiently credible in the VISACA villages to encourage responsible loan repayment behavior. The sixth feature is the self management approach followed in all the VISACAs. This successful experience has proven that with proper training and promotion activities, villagers can be given substantial if not full responsibility for managing their own finances.

An important lesson of program design in the VISACA experience is to appreciate the logic of a two stage sequence of donor involvement in promoting local savings and credit associations. In the first stage, donor support was focused on promotion, technical assistance, and training, with a long term resident advisor working closely with the VISACAs. No external funding was provided for on-lending. The objective was to promote properly remunerated local savings deposits as the exclusive base for on-lending, thereby ensuring local identity and local control and autonomy in decision making, both of which are essential ingredients for promoting responsible loan recovery.

The second stage, some three to four years later, involved some donor funding that was used for on-lending through the vehicle of 9 month or 1 year deposits. This expands the base for on-lending beyond the limits set by the local deposit base. More importantly, it extends term transformation into longer term loans than would be possible from local deposits. The lending activity that grows out of this action is untargeted and therefore blends into the generalized practices used for other loans. An important caveat to this second stage is to limit the volume of outside funding for on-lending to a small portion of total lending. Otherwise, the image of local identity, local control and, most importantly,

local deposits could become jeopardized as a donor virus contaminates the portfolio with an entitlement or dole psychology.

6. The Indigenous Business Advisory Services (IBAS)

A. The IBAS Program

The sixth chapter documents and evaluates the performance of IBAS in promoting microentrepreneurs in The Gambia. In particular, its role as an intermediary of loan services is reviewed critically. The IBAS microenterprise program of the mid to late 1980's recorded substantial defaults. As of June 1991, 44 percent of the total portfolio comprised of two donor and one government funding sources were in default. Factoring this finding into a risk premium which in turn was incorporated into total lending costs concludes that the program could only have broken even if it had charged interest rates as high as 92 percent to make up for the default losses or conversely, it could only break even at present interest rates on loans with a default of no more than 4 percent of its portfolio. These dramatic results highlight the severe financial shortcomings of the program and underscore the fact that the interest rates charged in the programs were mere token gestures at pricing loans to cover default losses. If we subtract the government program from our risk premium calculations, the remaining two donor programs together would have to charge 66 percent to break even (i.e. covering default and operating costs). Such a program can only function through sustained subsidies from donors or the government since loan recoveries are insufficient to maintain the revolving funds behind the program, or cover the costs incurred in servicing the program. Not surprisingly, high arrears were associated with large, long term loans as compared to other loan characteristics.

Recent attempts at program reforms were undertaken to improve program performance. IBAS has assumed complete responsibility for loan recovery, a function previously carried out under a guarantee program by the former GCDB. Political intervention in the allocation of funds have allegedly been lessened. Collateral in the form of a guarantor's bank account is presumably able to be assessed in the event of default. However, interest rates (14 percent) are still substantially below market rates (e.g. 20-26 percent), risk-prone longer terms loans are still emphasized, and administrative costs of the program are still covered by subsidies issued through the government's budget. It is unlikely that the program could even cover its costs with such a low interest rate (14 percent) even if the default problem is reduced substantially. In addition to raising its interest rates to market levels, IBAS should also be granted greater administrative autonomy than its current status confers. Its management should be given the power to hire, promote, or discharge employees outside conventional civil service regulations. This could create a leaner and higher quality human capital base to introduce stricter portfolio management criteria.

One strategy to reduce default would be to introduce a loan tracking information system. This approach quickly identifies shortfalls in installment repayments over amounts

due for long term loans and then correlates this with loan properties and borrower characteristics. This contributes to risk management in two ways. First, one could immediately address the problem of default early in the history of the loan and immediately confront borrowers before any delinquent habits have been locked in place by inertia. Second, management could easily generate valuable information on the aggregate profile of loan arrears by borrower and loan type. This could create a risk/return profile by borrower type and business characteristics that could be used by loan officers evaluating new loan proposals. Such a system would allow IBAS to engage in more efficient risk management, thereby lowering its default losses and prolonging the life of its revolving funds.

The government should determine whether the program is at least cost effective, i.e. whether it is economizing in the most efficient manner the budgeted resources per loan issued and recovered and secondly, whether there are a sufficient number of deserving non-delinquent beneficiaries to justify the budgetary costs involved. In short, authorities would have to estimate the opportunity cost of using public monies in this fashion rather than in some alternative use, recognizing that there is a substantial default problem in this loan program.

A controversial issue in the current IBAS program is the fact that a large majority of the borrowers are one-time only clients. While there are no explicit restrictions limiting borrowers to one loan, only a handful of entrepreneurs have received two loans in the current portfolio. IBAS authorities try to reach as large a number of microentrepreneurs as possible. They should be more interested in inculcating good loan habits over time and training their borrowers to manage financial flows in a sustained fashion with a more slowly growing clientele. The "one-shot" philosophy can develop a "turn-key" flavor in that the goal is to quickly allow the microentrepreneurs to buy some investment goods and then abruptly turn them loose to get on with business of production without any further access to finance from the program. This philosophy overlooks the equally important role that financial services should play in the process of modernizing small scale manufacturing activities. Once investment loans have been issued to a responsible borrower and her or his equipment is in place, smaller working capital loans could play a useful role in allowing microentrepreneurs to generate a higher stream of retained earnings for future investment.

Another weakness of this one shot approach is the impact it has on loan recovery. If a borrower does not gain a reward of continuing access to financial services through repaying his/her loan, then there is little incentive to do so. One suspects this may have played a role in the high arrears of the earlier programs described in this chapter. Given the fact that poor loan recovery quickly erodes a revolving fund, thereby hastening the end of the loan program, it would be in the interest of IBAS authorities to build more tangible incentives for loan repayment into their current program by permitting follow-up working capital loans to previous borrowers in good standing. In the end, IBAS would be servicing a smaller number of clients, but the program would be servicing these clients over a longer period of time with more sustained financial services (for those responsible borrowers repaying their loans) thereby graduating them into more secure business growth in the

future. At the same time, the revolving fund would not be eroded through negative incentives creating poor loan recovery. In addition, IBAS gains additional valuable information on the borrowers performance that can allow it to screen its clientele more efficiently for future loan services. In conclusion, we recommend that IBAS continue working with the remaining volume of the revolving fund at their disposal to implement the above suggestions for a trial period of one to two years. In the meantime, no new funding for credit should be permitted until results can be determined from these new program guidelines.

B. The OSU Microenterprise Survey

Finally, a random sample survey carried by the OSU team in Greater Banjul underscored many revealing operational characteristics and financial channels servicing micro and small scale entrepreneurs in the Gambia. One hundred and fifty three entrepreneurs were interviewed divided equally into four key subsectors: bakeries, metal workshops, tailors, and tie and dye producers. Most were owner-operated with an average of 5 employees and a modest physical asset base of D 128,727. A majority of these small scale operators were working for someone else before launching their own business. Most were illiterate (59 percent) with an average age of 38 years and were members of fairly large households (10 members on average). Seventy percent were men and about 30 percent women entrepreneurs. Further, there was a distinct gender profile with female entrepreneurs accounting for a majority of the tailoring establishments and tie-dye operations unlike male operators who were predominant as bakers and metal workers.

A substantial majority of these entrepreneurs launched their businesses with personal savings rather than with external loans. The single exception to this rule was the subset of modern bakers who received off-shore financing for their equipment. All owner-operators drew heavily on retained earnings for their working capital. Next in order of priority was informal borrowing from family and friends. In third rank were advances from customers. These stood out in tailoring enterprises and metal workshops. Last in rank order was suppliers credit and formal loans. The former was most visible in the bakeries subsector and the later in the modern bakeries subsector. This descending rank order of funding sources follows the pecking order theory common to businesses in developed countries in which the safest source of finance (that does not jeopardize the entrepreneur's ownership control over her/his business), retained earnings, is used first, followed by various external sources in descending order of increased risk to the entrepreneur's control over her/his business.

All operators used both formal and informal savings instruments with formal bank savings accounts standing out for the relatively modern bakeries and tailoring subsectors and informal group savings or moneykeeper services used by the other more traditional subsectors. Women entrepreneurs more commonly operated through group savings vehicles (Osusus) while traditional male operators used moneykeepers.

Given the meager presence of formal loans through IBAS or through banks in this random sample of small scale operators, large expensive microenterprise programs can only hope to reach a very small subset of these producers. Therefore, it is all the more important to keep in mind that these producers can only be reached by more broad based macroeconomic and trade policies. They are all universally impacted by any government regulations or policies that affect their costs or revenues such as tariffs, taxes, registration fees, access to foreign exchange, price controls, etc. Generally speaking the more open and liberalized the economy, the better the economic environment for microentrepreneurs. In conclusion, the recent liberalization of the Gambian economy has produced a more positive environment for such small scale operators. It is to be hoped that such policies continue and the transaction costs of registration and licensing be held at a minimum for these operations.

7. Commodity and Financial Flows Through the Fertilizer Sector

This chapter examined the evolution of the fertilizer sector in The Gambia from the early 1970s up to the present. Two points stand out in this analysis: fertilizer consumption increased dramatically up to the mid 1980s, then stagnated; and the marketing channels have become more complex and diverse. Although the private sector has played a more prominent role in recent years, the country is a long way from having a reliable self-sustaining privatized fertilizer sector that provides regular access to a large number of farmers. It is difficult to forecast or proscribe the future configuration of the sector given the large number of developments that are taking place in restructuring groundnut processing and marketing, in restructuring and strengthening the GCU (see Chapter III), in the rapid expansion of the NGOs (see Chapter II), in restructuring the FAO dealer network (see Chapter IV), and in the efforts of the government and the donors to create a more vibrant private sector.

A more prominent role for the private sector is not likely to develop because of the implementation of some governmental plan or program for fertilizer. Rather it is likely to occur through trial and error by private businessmen attempting to make a profit in an uncertain environment. The government and donors need to identify the few strategic actions they can take to facilitate the process of change, then step back and monitor developments. There appear to be four sets of activities that can be undertaken to facilitate privatization of the fertilizer sector. They are identified and briefly described below.

- Make a clear commitment to get the government, donors and NGOs out of the business of importing and distributing fertilizer. Private entrepreneurs will not undertake risky and expensive investments if they think they might be destroyed by the unexpected dumping of cheap fertilizer into the market as can occur when a well-intentioned donor panics because of supposed inadequate supplies or high prices. Occasional shortages and high prices are to be expected as a privatized fertilizer sector works out the wrinkles in

importation and distribution. The private sector is likely to "sit on the sidelines" until it is certain of the commitment to privatize the sector. So far, the entrepreneurs are not yet convinced enough to risk investing large amounts of their own capital.

- Improve the yield response of important crops. The uncertainties surrounding yield response need to be clarified. If, as appears to be the case, yield response is low for many crops, then the problems need to be identified and solved. In a regime with reduced fertilizer subsidies, a necessary condition for fertilizer use is that the yield response must be high enough to compensate for production and marketing risks. This is a logical task for donors to undertake because they have ready access to foreign scientists and research centers with the expertise to deal with the problem.

- Improve product pricing and access to markets. This is a large topic and is beyond the scope of this study. Suffice to say that completion of the reforms of the groundnut sector and any other action that improves access to markets and the prices received by farmers will stimulate fertilizer demand and improve the conditions for privatized fertilizer trade.

- Stimulate domestic lending to the fertilizer sector with a guarantee fund for fertilizer loans. The analysis presented in Chapter I demonstrated that there are substantial resources in the domestic banks to finance the fertilizer sector. As the private demand for fertilizer loans begins to expand, however, the learning process that the domestic banks will have to go through in serving this sector may be accelerated by a guarantee fund that reduces the risk to the bank of incurring a loss due to a bad fertilizer loan. The liquidity of the banks eliminates the justification for donor funds for on-lending but foreign resources could play a strategic role in sharing the risk and expense of operating the guarantee and thereby reduce the financial constraints that private sector firms may face.

8. The Food Commodity Traders: Possible Agents for Fertilizer Marketing

The eighth and final chapter focuses on the nature of the informal financial arrangements servicing the food commodity sector in The Gambia and the marketing channels through which they operate. In short, the analysis provides information about both the importation and distribution of these commodities, and the financial arrangements that facilitate this trade. It underscores important lessons about how the system operates and allows us to speculate about how these traders may respond to the possibility of becoming more actively involved in the privatization of the fertilizer sector.

With the liberalized market environment in The Gambia, in which private trading has become more dynamic, food commodities, and especially flour and rice, are being imported and sold in large quantities and apparently at competitive prices. The existence of multiple agents at each level of the marketing channel contributes to competition. Part

of the dynamism and efficiency is due to the large reexport trade which allows these traders to achieve large scale operations.

The financial contracts associated with the flow of commodities seem to be working fairly efficiently and the prices and interest rates for financial services are reasonably competitive. Offshore banks and suppliers credit provide most of the liquidity in the system because of the lethargic response of the domestic banking system. If the large importers could not access offshore funds, they would be faced with paying higher costs from domestic banks, while small and medium size firms without proven records of loan repayment would probably find it difficult to obtain loans at all.

The large private traders have accumulated experience and knowledge over time in their trading activities. They have market contacts, storage and transportation facilities, knowledge about international trading, and established relations with offshore financial institutions. As noted in Chapter VII, two firms have been involved with fertilizer imports for the FAO. Given that the government and donors are trying to privatize the marketing of agricultural imports, especially fertilizer, a logical question is whether or not and under what conditions the traders of food commodities would expand into fertilizer. Several things learned in the course of this study allow us to speculate about the possibilities of this occurring.

There are important differences and similarities between food commodities and fertilizer that affect the private sector response to the fertilizer sector in The Gambia. They can be grouped into possibilities for a) scale economies, b) scope economies, and c) access to finance.

A. Scale Economies

The food commodity trade operates on a fairly large scale but there are several limits to the scale of operations in the fertilizer sector.

- The total volume of domestic fertilizer demand is much smaller than for food commodities, as discussed in Chapter VII.

- The production cycle for crops for which fertilizer would be used is much longer than the shorter-term consumption cycle for food commodities, so there is a slower turnover of inventory. Therefore, sellers have fewer contacts with buyers and have less opportunity to monitor their businesses.

- There is great uncertainty about reexport demand for fertilizer. Fertilizer has been imported into The Gambia from Senegal. It is unclear what conditions would be required in neighboring countries for The Gambia to serve as an entrepot for regional fertilizer imports.

- The amounts of food aid entering The Gambia with potential distortionary effects on prices is fairly small. However, the subsidized role of the government and donors has been very large in the fertilizer sector; therefore, the possibility of their future involvement creates considerable uncertainty for private traders who would be unable to complete against a subsidized public sector distribution channel.

- The demand for food commodities that are important staples in The Gambia diet is likely to be quite inelastic. As a result, consumption is probably fairly stable, even when prices change. On the other hand, manure may be a fairly good substitute for chemical fertilizer or farmers may simply not use fertilizer if the price rises too much. Therefore, the quantity of fertilizer demand (i.e. sales) may become quite volatile in a privatized market if prices fluctuate widely as may occur in the international market, in which The Gambia is clearly a price taker.

These five factors suggest that private traders will find it difficult to achieve scale economies in the fertilizer trade and this will make them cautious about investing in it, especially if they expect that there may be several agents competing for a small market.

B. Scope Economies

If food traders decide to enter the fertilizer trade, there are four factors that suggest they might achieve scope economies.

- The dealers could probably use many of their existing transportation and warehousing facilities for fertilizer if they have sufficient capacity, or even reduce their food trade if profits were sufficient to justify using more facilities for fertilizer.

- The trade linkages established between importers, wholesalers, and retailers in the food trade may be used for the fertilizer business. Retailers in villages and towns are accustomed to selling a variety of products and they may find it profitable to handle fertilizer and acquire it from the same channels as their food commodities.

- The large scale importers may be able to use their recognized creditworthiness with offshore financial institutions to acquire needed letters of credit and working capital for the fertilizer trade.

- The food traders with multiproduct businesses have the flexibility of shifting among commodity lines and therefore may be able to make a profit and survive better in a dynamic market than a undiversified, single produce a fertilizer business.

C. Financing the business

Food traders have established ways to finance their businesses which appear to be reliable and reasonably priced. There are several differences with the fertilizer trade,

however, that may make it difficult to transfer these same techniques to the fertilizer business. These problems may exist either a) in the acquisition of capital for the business, or b) in the granting and recovery of credit given to customers.

- The large scale importers finance their businesses generally with short-term offshore letters of credit. Because of the rapid sales turnover, they can sell their stock on credit to their customers, yet get repaid in time to pay their credit obligations. The crop production season is several months long, however, so credit given to customers for fertilizer must be for a longer term. This means that the importer must get longer term credit which may not be as readily available or may be more expensive even from offshore sources. If they do not get longer term credit, there will be a mismatch in term structure: a trader would borrow short but would provide longer term suppliers credit to wholesalers/retailers who would provide seasonal credit to farmers. Interest charges (or foregone discounts) for credit sales would have to be higher for fertilizer credit to compensate for the larger interest expense.

- It is more risky for wholesalers to make loans to retailers or retailers to make loans to their customers (farmers) for longer term fertilizer credit than for shorter term food commodity credit. They do not see their customers as frequently, cannot monitor their activities as well, and cannot as effectively use the threat of cutting off future loans (and therefore access to the commodities) if current loans are not repaid. This problem is somewhat less severe if the agent making the fertilizer loan also sells food commodities to the same customer. Then access to food loans can be made conditional on good repayment of fertilizer loans.

- Fertilizer loans are made for an inherently risky farming activity which is several months in duration. The size of the typical fertilizer loans made by a retailer to a farmer is likely to be larger than a food loan. The capacity to repay the fertilizer loan may be dependent on agricultural production, while the food consumption loan may be paid from any source of household income. If the retailer must cut off future credit because of nonrepayment of past credit, his total loss will likely be higher on a fertilizer than a food loan. This higher probability of a large loss makes credit sales of fertilizer riskier for the retailer than food credit sales. This is similarly true for suppliers credit at all levels in the fertilizer trade channel.

- The repayment of fertilizer loans made to farmers in some countries is facilitated through input-output linkages. For example, food processors, traders, cooperatives, etc. purchase farm commodities so they deduct the cost of fertilizer advanced from the purchase price of the commodities acquired. Unless the food commodity traders in The Gambia begin to acquire farm products, they will not be able to develop these linkages.

This analysis suggests that agents at all levels in the food commodity trade channels may enjoy some economies of scope if they expand into the fertilizer sector. But problems of smaller scale and more complicated financial arrangements may discourage them from

doing so. New specialized fertilizer traders would experience problems in all three areas, and it is unclear if they would enjoy any major offsetting advantages.

There is little that policymakers can do outside of direct subsidies or granting a fertilizer monopoly to some dealer that will improve the prospects for privatizing the fertilizer trade under the particular circumstances faced by The Gambia. The best recommendation is to create a private bank guarantee fund, as described in Chapter IV, that will increase the probability that private traders who decide to enter this risky business will have reasonable access to working capital. This analysis also suggests that the outcome of the current efforts to restructure the GCU and the groundnut processing industry will have a crucial bearing on the future of the fertilizer sector. The agents, private or cooperative, that procure and process farm commodities will have the best chance of successfully developing the fertilizer trade.

CHAPTER ONE

A REVIEW OF FORMAL FINANCIAL MARKETS IN THE GAMBIA 1981 - 1991

by

Stephen Pollard

Douglas H. Graham

Benjamin Carr

and

Carlos E. Cuevas

Table of Contents

I. INTRODUCTION 1

II. THE CHANGING MARKET STRUCTURE FOR BANKING IN THE GAMBIA IN THE 1980S. 2

III. FINANCIAL LIBERALIZATION AND MONETARY POLICY 4

IV. TRENDS IN TOTAL CREDIT BALANCES 5

V. INVESTMENT, GOVERNMENT EXPENDITURE AND CROWDING OUT 8

1. Government Expenditure 8

2. Investment 9

3. Crowding Out and Tight Credit 9

4. Problematical Sterilization Efforts 12

5. Econometric Analysis of Monetary Policy Issues 12

VI. TRENDS IN SECTORAL CREDIT 15

VII. SECTORAL ALLOCATION OF CREDIT BY BANK GROUP 17

VIII. FINANCIAL DEEPENING INDICATORS 19

IX. INTEREST RATES IN THE GAMBIA 20

1. Government Securities and Savings 21

2. Lending Rates 21

3. Gross Intermediation Margins 22

4. The Determination of Interest Rates in The Gambia 24
A. Interest Rate Parity 24
B. Government Deficits and Interest Rates 25
C. Thinness of T-bill Market 25
D. The Fisherian Approach 25
E. Linkage Between Deposit Rates and T-bill Rates 26
F. Summary 26

X. FINANCIAL PERFORMANCE OF THE BANKING SECTOR 27

1. Bank Balance Sheets 27

2. Savings and Demand Deposits 28

3. Profit and Loss Positions of Commercial Banks 29

XI. THE GCDB AND ISSUES OF DEVELOPMENT BANKING 31

1. The Early Years up to the Early 1980s 31

2. The Early 1980s 32

3. The Post ERP Years 34

4. The Final Years and The Meridien Bank Solution 35

5. The Development Bank Syndrome 38

XII. SUMMARY 40

1. Decadal Patterns of Change 41

2. Market Structure and Institutional Failure 42

3. The Impact of Structural Adjustment Measures 43

4. Savings Mobilization 43

5. Urban Bias and the Emergence of NGOs 44

REFERENCES 42

C

List of Appendices

APPENDIX I-1 THE DEMAND FOR MONEY 47

Appendix I-1 Table 1 Estimates of the Demand for Money in The Gambia. 49

APPENDIX I-2 NOTES ON ALTERNATIVE FORMS OF TERM FINANCE IN THE GAMBIA 50

Appendix I-2 Table 1 Share of Total Gross Assets of the Social Security and Housing Finance Corporation Allocated Among the Three Major Funds of the Program. . 60

Appendix I-2 Table 2 Percentage Change in Total Assets for the Three Funds of the Social Security and Housing Finance Corporation (1989 through 1991). 60

Appendix I-2 Table 3 Composition of Gross Assets of the Social Security and Housing Finance Corporation (as of June 30, 1991). 61

Appendix I-2 Table 4 Percentage Allocation of Government Securities (Development Stocks, Discount Notes and Treasury Bills) of the Social Security and Housing Finance Corporation Among its Three Major Funds, 1989-91. 62

Appendix I-2 Table 5 Income and Expense Statements for SSHFC Funds (For Year Ended 30 June 1991). 63

List of Tables

Table I-1 Market Structure of the Banking Industry in The Gambia, for Selected Years, 1980/81 to 1991/92. 67

Table I-2 Bank Openings and Closings for Banks Operating in The Gambia, 1980/88 to 1992/93. 67

Table I-3 Outstanding Balances of Private and Public Sector Credit in The Gambia, 1981-1991 (Millions of Current Dalasis). 68

Table I-4 Real Outstanding Balances of Private and Public Sector Credit in The Gambia 1981-1991 (millions of 1976/77 dalasis). 68

Table I-5 Indices of Real Private Sector, Public Sector and Total Credit in The Gambia (1981=100). 69

Table I-6 Ratios of Credit to Total GDP. 69

Table I-7 Indices of Real and Sectoral GDP in The Gambia 1981-1991 (1981=100). 70

Table I-8 Managed Fund Account (i.e. volume of credit outstanding transferred from the GCDB) in Absolute and Relative Terms by Private and Public Sector Allocation and Sector of Economic Activity in 1987. ... 70

Table I-9	Total Revenue and Expenditures for Central Government Operations in The Gambia 1985/6 to 1991/2 (in millions of current dalasis).	71
Table I-10	Real Gross Domestic Investment and Real Government Expenditure in The Gambia, 1987-1991 (millions of 1976/77 dalasis).	72
Table I-11	Indices of Real Private Investment, Real Government Investment and Real Government Expenditure in The Gambia, 1987-1991, (1987=100).	72
Table I-12	Percentage Shares of Investment and Government Expenditure in GDP.	72
Table I-13	Liquidity Position of Commercial Banks in The Gambia 1987-1990, (millions of current dalasis).	73
Table I-14	Distribution of Outstanding Government Securities in The Gambia, (millions of current dalasis).	73
Table I-15	Composition of M2 in The Gambia, 1981-1991 (in millions of current dalasis).	74
Table I-16	Real Commercial Bank Credit by Sector in The Gambia 1981-1991, (Loans Outstanding, millions of 1976/77 dalasis).	75
Table I-17	Indices of Real Commercial Bank Credit by Sector in The Gambia (1981=100).	75
Table I-18	Ratio of Sectoral Credit (outstanding balances) to Sectoral GDP in The Gambia, 1981-1991 (percentages).	76
Table I-19	Sectoral Shares of Total Gross Domestic Product in The Gambia, 1981-1991 (by major sectors).	76
Table I-20	Sectoral Shares of Total Commercial Bank Credit in The Gambia (Percentages) 1981-1991 (by major sectors).	77
Table I-21	Measures of Real Sectoral Commercial Bank Credit in The Gambia, 1981-1991 (Loans Outstanding, millions of 1976/77 dalasis).	77
Table I-22	Indices of Real Sectoral Commercial Bank Credit in The Gambia (1981=100).	78
Table I-23	Sectoral Shares of Total Commercial Bank Credit in The Gambia (Percentages).	78
Table I-24	Real Commercial Bank Credit by Sector and Bank Groups (GCDB and other commercial banks) in The Gambia, 1981-1991 (loans outstanding, millions of 1976/77 dalasis).	79
Table I-25	Indices of Real Commercial Bank Credit by Sector and Bank Group in The Gambia, 1981-1991 (1981=100).	80
Table I-26	Relative Shares of Commercial Bank Credit within each Sector by Bank Group in The Gambia, 1981-1991 (percentages).	81
Table I-27	Currency, Demand Deposits, and M1 in The Gambia, 1981-1991 (millions of current dalasis).	82
Table I-28	Selected Measures of Money in The Gambia 1981-1991 (millions of current dalasis).	82
Table I-29	Measures of Financial Deepening and Velocity in The Gambia 1981-1991.	83

Table I-30 Ratios of Currency to Selected Measures of Deposits in The Gambia, 1981-1991. 83
Table I-31 Selected Nominal Interest Rates and Inflation in The Gambia 1981-1991. 84
Table I-32 Selected Real Interest Rates in The Gambia 1981-1991. 85
Table I-33 Weighted Deposit Interest Rates in The Gambia 1981-1991. 86
Table I-34 Selected Weighted Lending and Asset Interest Rates in The Gambia, 1984-1991. 86
Table I-35 Gross Nominal Interest Rate Margins Between Average Lending and Deposit Rates in The Gambia, 1984-1991. 87
Table I-36 Ratios of Loans to Total Deposits of Commercial Banks in The Gambia 1986-1991. 87
Table I-37 Ratios of Loans to Total Deposits and Borrowings of Commercial Banks in The Gambia, 1986-1991. 87
Table I-38 Consolidated Balance Sheet for All Commercial Banks in The Gambia, 1986-1991 (in millions of current dalasis). 88
Table I-39 Balance Sheet for the GCDB, 1986-1991 (in millions of current dalasis). 88
Table I-40 Balance Sheet for Other Commercial Banks in The Gambia, 1986-91 (in millions of current dalasis). 89
Table I-41 Relative Shares of Assets and Liabilities for All Commercial Banks in The Gambia. 89
Table I-42 Relative Shares of Assets and Liabilities for the GCDB. 90
Table I-43 Relative Shares of Assets and Liabilities for Other Commercial Banks. 90
Table I-44 Percentage Changes in Assets and Liabilities of All Commercial Banks in The Gambia 1987-1991. 91
Table I-45 Percentage Changes in Assets and Liabilities for the GCDB, 1987-1991. 91
Table I-46 Percentage Changes in Assets and Liabilities for All Other Commercial Banks. 92
Table I-47 Profit and Loss Statement for Commercial Banks in The Gambia (thousands of current dalasis). 93
Table I-48 Performance Indicators of the Commercial Banking Sector in The Gambia. 94
Table I-49 Rate of Return on Loan and Non-Loan Assets in the Banking System of The Gambia, 1988-1990. 95
Table I-50 Income and Expense Statement of the GCDB, 1981 to 1991 (in 1000 of current dalasis). 96
Table I-51 Balance Sheet and Related Accounts of the GCDB, 1981 to 1991 (in 1000 of current dalasis). 97

ACRONYMS USED IN CHAPTER ONE

ADB	Agricultural Development Bank
AMRC	Asset Management and Recovery Corporation
BICI	Banque International de Commerce et Industrie (International Bank of Commerce and Industry
CB	Continental Bank
CBG	Central Bank of The Gambia
ERP	Economic Recovery Program
FIA	Financial Institutions Act
FPS	Federated Pension Scheme
GCDB	Gambia Commercial and Development Bank
GCU	Gambia Cooperative Union
GMFI	General Merchants Financial Institution
GPMB	Gambia Produce Marketing Board
IBWA	International Bank of West Africa
MB	Meridien Bank
MFA	Managed Fund Account
NPF	National Provident Fund
SCB	Standard Chartered Bank of The Gambia
SSHFC	Social Security and Housing Finance Corporation
T-bills	three-month Treasury bills

CHAPTER ONE
A REVIEW OF GAMBIAN FINANCIAL MARKETS: 1981 - 1991

I. INTRODUCTION

The Gambia presents a revealing case study of financial excess and financial reform in the past decade.[1] The first half of the decade witnessed an expansion of credit accompanied by all the signs of distorted financial markets, i.e. growing negative real rates of interest, interest rate ceilings, credit ceilings, targeted and subsidized credit, dependence on outside funding sources, rising deficits in parastatal institutions and rising arrears in the Gambian Commercial and Development Bank and the termination of the Agricultural Development Bank. The second half of the decade through 1991 saw a disciplined economic stabilization program first initiated by Gambian authorities with the Economic Recovery Program (ERP), followed up with international donor structural adjustment programs. In this period, the expansion of credit was curtailed substantially, macroeconomic stabilization instituted, and the fiscal deficit reduced. The growth of GDP averaged roughly 3.3 percent for the period 1986-91. The liberalization of financial markets was an integral part of the reform period from 1986 to the present.

This first chapter reviews important dimensions of this financial history. First, the changing structure of the banking industry is laid out. This is followed by a brief review of the principal reform measures undertaken in financial markets. With the structure of banking and the degree of financial liberalization clarified, the following sections of Chapter one document the trends in real credit balances over time and their sectoral allocation. Financial deepening is explored along with the issue of crowding out. The structure of interest rates and interest rate margins are documented and the controversy surrounding the allegedly high interest rates are explored through a model testing the determination of interest rates in The Gambia. The financial performance of the banks is established for recent years and the issue of development banking discussed in a review of the recent demise of the Gambia Commercial and Development Bank (GCDB). Finally, one appendix presents a formal model of the demand for money in Gambian financial markets while the second appendix explores possible alternative forms of term finance in The Gambia.

This analysis of formal finance is undertaken for three reasons. First, it is important to understand the impact of key policies on the financial sector. Second, it is equally

[1] The authors would like to thank the staff of the Central Bank and members from the banking community for their cooperation in sharing information and discussing the many issues treated here. Also, Charles Mann and the HIID staff has interacted fruitfully with the OSU Research Team. They of course should not be held responsible for any opinions expressed or errors remaining in the work.

important to determine the availability of financial services for private businesses and households. Third, it is necessary to understand why so many non-bank intermediaries and programs have been undertaken in recent years. This latter issue will be explored further in later chapters.

II. THE CHANGING MARKET STRUCTURE FOR BANKING IN THE GAMBIA IN THE 1980S.

Table I-1 presents the market structure of the banking industry over the past decade. For most of this period The Gambia was served by only three to four banks. The number of bank branches ranged from 12 to 14 in number but most of these were located in Greater Banjul. Only three branches were consistently functioning outside Greater Banjul; one in Farafeni, and two in Basse. The most relevant finding for this period, however, is visible in Table I-2. There has been a significant turnover of banks in a relatively short period of time (10 years). Five banks have been opened during this period and four have been closed with one undergoing litigation.

The most significant bank closing occurred in June 1992 with the termination of the 20 year history of the Gambia Commercial and Development Bank (GCDB). At the end of June a part of the bank's assets were turned over to the Meridien Bank, an international commercial bank with a growing network in Africa. This action effectively closed the chapter on development banking in The Gambia, a capstone of the liberalization and privatization movement launched by the Economic Recovery Program in 1985. By late 1992, all banking was being conducted in private commercial banks with a short term loan portfolio largely restricted to trading activities. As will be seen later, this lending activity comprised only a minority of their assets as the T-bill market and foreign exchange operations began to predominate in their banking operations.

The most disturbing feature of this profile is the relatively high turnover of banks for such a small market in such a short period of time. Beginning in 1981/82, the General Merchants Finance Institution (GMFI) was closed after one year of operation. In 1985/86, the International Bank of West Africa (a branch of the BIAO) closed after three years of operation. In 1988/89, the Agricultural Development Bank (ADB) terminated operations after seven years. Finally, in 1991/92 the GCDB terminated operations while the Continental Bank, within months after its license to operate was approved in 1991, was fighting Central Bank action in court to prevent its closure. Only two banks, the Standard Chartered Bank of Gambia (SCB) and the International Bank of Commerce and Industry-BICI (a branch of a Senegalese Bank) have maintained uninterrupted service throughout this entire period. It is of interest to note that one of these banks originated in the Colonial period (SCB) and the other in the early independence period (BICI).

In light of these developments, it would appear that Central Bank authorities were inexperienced in reviewing applications for bank charters. To have two banks fail after one to three years, reflects a limited and unstable market for banking in The Gambia during the early to mid-1980s. Furthermore, taking action to revoke a bank charter that had only been approved months earlier suggests the Central Bank could improve its processing of information needed to evaluate private bank charter applications.

These limitations have manifested themselves in two areas. First, it is clear that Gambian authorities and donors misjudged the high social costs and minimal social benefits of establishing and promoting development banking institutions in the country. The failed experiments in development banking through the Agricultural Development Bank and the Gambia Commercial and Development Bank have created a costly legacy for the country to absorb. As will be discussed later in this chapter, it is difficult not to conclude that these experiments in development banking contributed to a regressive distribution of income in the country.

While the Central Bank is ostensibly responsible for the regulation and supervision of the banking industry, it would not be fair to hold Central Bank authorities responsible for the failure of the ADB or the GCDB. As is characteristic of most developing countries, central banks do not enjoy strong autonomy from the executive branch of the government. The deficiencies of development banking in The Gambia, a topic that will be explored in detail at the end of this chapter, were primarily derived from executive branch intervention to promote a cumulative supply of credit to a high risk, targeted clientele that eventually defaulted on their loans causing these banks to fail. Central Bank authorities along with the management of the development banks, for the most part, did not enjoy sufficient autonomy to challenge these directives. Until the Central Bank secures institutional independence from the executive branch, the loan portfolios of development banks will be largely shaped by government priorities and influence frequently at the expense of sound banking practices.

Finally, it is apparent that it has been difficult to select winners from among the private commercial bank charters approved in the past ten years. One private bank failed, a second closed its operations, and a third is under litigation. To secure a stable and secure growth of formal financial markets in The Gambia, it is important that donors and government authorities strengthen and up-grade the supervisory and bank charter review functions of the Central Bank to better carry out these roles in the future. The recent revision of the Financial Institutions Act is a step in the right direction. It is encouraging to see Central Bank authorities undertaking the initiative to improve the supervisory and regulatory roles implicit in the revised Act.

III. FINANCIAL LIBERALIZATION AND MONETARY POLICY

Prior to the Economic Recovery Program (ERP) in 1985, monetary control of the financial system was exercised largely by global credit ceilings and, to a lesser extent, by modest reserve requirements. Interest rate controls were also common along with many government and donor driven subsidized, targeted lines of credit provided through the GCDB. These lines were almost exclusively for agricultural lending and channeled through the GCDB to its downstream parastatal network. These classic forms of intervention in financial markets were the manifestations of the supply leading strategy of financial development. In time, arrears grew to alarming proportions in the GCDB and the negative real rate of interest environment generated by interest rate ceilings and subsidized credit came under attack. However, it was not easy to remove these distortions in financial markets until macroeconomic balance was introduced into the economy. Several halfhearted attempts at economic stabilization were attempted in the early 1980s with IMF assistance. But it was not until 1985 that a credible consistent stabilization program was carried out by Gambian authorities.

The crux of the ERP and the ensuing structural adjustment measures was the introduction of a flexible exchange rate regime and a partially liberalized interest rate policy (McPherson and Radelet, 1991). In September 1985, the Central Bank of The Gambia (CBG) doubled lending rates and rediscount rates from around 8 to 15 percent. Reserve requirements were raised from 8 to 15 percent on demand deposits and from 4 to 6 percent on time deposits. Global credit limits, however, remained in force as a monetary tool controlling liquidity. It was still not possible to free up interest rates and remove credit limits until a substitute monetary tool was in place to carry out these functions satisfactorily.

That monetary tool turned out to be treasury bills. The T-bill market has been functioning since the early 1980s, however, it was a generally moribund market and an unimportant monetary instrument until the bi-weekly tender-auction bid system was set up in July 1986 (prior to this date, the Central Bank fixed interest rates on T-bills). From late 1986 onwards, the T-bill market grew substantially, largely through sales to private banks. This market has grown from a meager 24.4 million dalasis in 1986 to 264 million dalasis in 1991. Inflation was reduced from high rates of 43 and 30 percent in 1986 and 1987 to much lower rates between 9 to 12 percent in the early 1990s. Moreover, these auctions were reflecting a real demand for T-bills and, as a result, establishing a gradually rising floor on the structure of interest rates in loan markets. Thus, by 1990-91 credit limits could be removed, and the partially liberalized interest rate policy became fully liberalized by the early 1990s. Now monetary policy relied on the sale of T-bills and rising reserve requirements to control the money supply and inflation. Interest rates were free to find their own equilibrium subject to the interest rate floor established by the T-bill market. From the late 1980s to the early 1990s, this T-bill floor grew from 15 to 19 percent with loan rates ranging from five to ten points higher. In sum, by 1992 financial liberalization was complete, interest rates were flexible around a T-bill floor for loans and all vestiges of

targeting and subsidized credit and credit controls removed from Gambian formal financial markets.

IV. TRENDS IN TOTAL CREDIT BALANCES

The previous two sections of this chapter have underscored first that the Gambian banking industry in the past decade has operated in a small unstable oligopolistic market generating a fairly high turnover of institutions, given the small number of institutions (3 to 5 banks) characterizing the market. Second, the growing financial liberalization from the mid-1980s onwards was bound to shake up financial markets as subsidies and distortionary controls were removed and market forces allowed to rationalize and restructure the banking industry in The Gambia. In this section, we document a number of the more important shifts produced by these structural and policy induced changes in Gambian financial markets.

Measures of total outstanding credit balances are presented in Tables I-3 and I-4. This total is further disaggregated into total private and total public sector credit balances. Total public sector credit consists of net claims on the government along with credit to public sector entities. Table I-3 presents the basic time series (drawn from Table 7 of the Central Bank bulletins) in current dalasis from 1981 through 1991 while Table I-4 converts this time series into constant dalasis using the implicit GDP deflator. Table I-5 sets forth real indices of growth or decline over this period derived from the data in Table I-4. For the purposes of this trend analysis, we focus primarily on the real credit balances documented in Tables I-4 and I-5.

Total domestic credit balances in real terms increased substantially over the period 1981-83 (column 3, Table I-5). Then from 1983 to 1985 the outstanding credit balances declined slightly in real terms. From 1985 to 1991, however, there was a precipitous fall in the real value of outstanding credit in Gambian financial markets. This fall coincides with the period subject to the discipline of the Economic Recovery Program and later structural adjustment program for the country (McPherson and Radelet, 1991).

The subcomponents of total domestic credit balances, however, trace out different paths in the official statistics. Private sector real credit (channeled through the commercial banking system) increased sharply from 1982 to 1983, then declined even more dramatically from 1983 to 1987 when it stabilized up to the present at about 60 percent of its original real 1981 level (column 1, Table I-5). Conversely, public sector credit balances, which generally accounted for about 60 percent of total domestic credit up to the mid-1980s, declined from 1985 at an increasing rate, actually registering negative values in 1990 and 1991. The decade long decline in public sector credit and the recent appearance of negative balances is due to two factors: the decline in credit to public parastatal entities (which generates positive entries to public sector credit in the monetary survey data reported in the

Central Bank bulletins) and the confusing way in which the rise in the proceeds of the sales of government bonds and T-bills are documented in the monetary statistics. These sales proceeds are held on behalf of the government as deposits in the Central Bank (which generates a negative entry in the claims on government).

The ERP and structural adjustment programs from 1986 to the present introduced a strong mandate to reduce credit to public parastatal entities. This led to the sharp contraction visible in the public sector credit series in Tables I-4 and I-5 from 1986 onwards. From 1987 to 1989, net claims on the government recorded in the Central Bank bulletins had already turned negative, however, credit to public sector entities was still sufficiently high (though declining) to create a net positive balance when one combines the two elements making up total public sector balances (i.e. government credit). That is why our series reported in Tables I-3 and I-4 for the public sector remain positive through 1989. In 1990 and 1991, however, not only are the net claims on the government becoming even more negative, but the reduction of credit to parastatal entities become so severe that it did not compensate for the rising negative values of net claims on the government, thus negative values appear in our series for total public sector credit in 1990 and 1991.

In summary, the data on trends in total credit and public sector credit indicate, at first glance, that credit extended to the public has contracted in real terms over this period. However, these data do not give a complete picture with respect to credit. This is because the government is actually borrowing (receiving credit) over this period through the increasing sales of its T-bills (as shown later in Table I-14).

What masks this fact is that proceeds from the sales of T-bills are held by the government on deposit at the Central Bank. Hence, in examining government assets (i.e., deposits held at the Central Bank) and government liabilities (i.e., T-bills sold to banks and the public), the picture created is one in which net claims on government (liabilities minus assets) is negative and suggests that government borrowing has declined when this is not the case.

It should be noted that this policy (of depositing the proceeds of T-bill sales at the Central Bank) has beneficial effects for the economy. First, the policy has aided the government's efforts to sterilize foreign exchange inflows. Second, it has aided the government's efforts to control inflation. This has been accomplished by not allowing the funds to be disbursed into the economy, thereby leading to increases in the money supply and inflation. Clearly the rapid growth of the T-bill market after 1986 eventually created the declines in public sector or government credit as defined by official statistics. The government appears to have shifted from being a net debtor (i.e. issuing credit to state parastatal entities) in the early to mid 1980's to eventually becoming a net creditor by the early 1990s (through the growth of sales in T-bill and bond markets held in the government's deposit account in the Central Bank), but as explained above, the government is still borrowing substantially through T-bill sales.

The issue of government participation in credit markets is of concern since conventional wisdom suggests that private firms and individuals would be "crowded out" of the credit market with the expansion of government expenditures and debt. Public sector credit, until 1987, accounted for approximately 60 percent of total domestic credit. However, after 1987 there is a substantial shift of credit towards the private sector. This is consistent with the structural adjustment program emphasizing less credit to government and more for the private sector. The share of private domestic credit in total GDP reaches a high of 31 percent in 1983, but declines to 11 percent in 1987 (Table I-6). Total credit as a percentage of GDP has declined markedly indicating that the budget deficit as a percent of GDP has declined as well. Again, one might expect that this would put less pressure on the domestic credit market. However, one must recall that real private sector credit has also declined during this period (Table I-4) while its relative share has been increasing.

Do these trends indicate that the contraction of real credit has harmed growth and efficiency in The Gambia? An initial answer is, no, since the index of real GDP growth has been increasing since 1984 (Table I-7) despite the decline and then stabilizing trends in real credit outstanding since this date. This suggests that "too much" credit was very likely extended in the early 1980's (with low marginal impact on growth) and that declining credit is not a binding constraint to economic growth in the more recent period.

Furthermore, these trends suggest that from the mid-1980s onward either the demand for or the supply of credit to the private sector has declined, or both. The demand for credit would be dampened by such factors as adverse changes in rates of return for economic activities and changes in expectations of inflation (i.e. a decreasing rate of inflation raises the real cost of borrowing). Moreover, lenders may have reduced (i.e. rationed), the supply of credit to the private sector because of the adverse selection and moral hazard problems (i.e. rising loan arrears) that led to the poor financial performance of the Gambia Commercial and Development Bank (GCDB) during the 1980's. It is clear that a substantial part of the decline in the supply of credit from mid-decade onwards reflects the decline in new loans issued through the GCDB for private sector activity as well as for the loan activity of The Gambia Cooperative Union. The Central Bank reduced its support for the GCDB and the bank's management was constrained to reduce the flow of new loans (compared to previous levels), especially loans to public sector entities.

The contraction of credit documented in 1987, is also due to the transfer of "non-performing" government guaranteed loans from the GCDB to the Managed Fund Account of the government placed in the Central Bank. These transfers are detailed in Table I-8 and are quite substantial. They accounted for 18.9 percent of private sector credit and 26 percent of public sector credit in 1987. In short, the credit balances reported in Table I-3 understate the outstanding credit balances in The Gambia in 1987 in that some of these balances were shifted into other accounts (or, put differently, non-performing balances inflated the credit balance data prior to 1987). These findings point to two features to keep in mind when using data on Gambian credit. First, the official statistics can inadvertently give a misleading picture when some portion of past credit balances are no longer reported

in standard Central Bank reports or bulletins after they are removed or transferred to other accounts. Second, the use of a "stock" measure, i.e. loans outstanding, hides current credit activity (a flow measure). This makes it difficult to document the correlation of current credit (new loans issued) with current economic activity.

In conclusion, if we assume that an important part of the outstanding balances of the GCDB turned out to be **implicit grants** (i.e. loans that were not effectively recovered) and if, in turn, we keep in mind that the GCDB accounted for a substantial majority of the total credit balances in the financial system over this period, then the abrupt decline in outstanding real balances from 1985-6 onwards is an exaggeration of the true decline of "credit" activity over the past decade (i.e. loans issued and repaid). If one were to construct a time series of credit balances based only on loans issued and effectively repaid through time, the trend of this smaller credit balance series would likely be much more smooth and less abrupt than that associated with the current data series in Table I-3. In any event, a time series based on a "flow" measure of new loans issued each year would offer a far more revealing insight into the evolving state of credit markets than the current reporting practices in the Central Bank Bulletin which report a "stock" measure of accumulated outstanding balances containing an important element of non-performing loans from the past. It would be helpful if the Central Bank Bulletin report both series.

V. INVESTMENT, GOVERNMENT EXPENDITURE AND CROWDING OUT

1. Government Expenditure

We explore the issue of credit and economic activity further, by examining the crowding out hypothesis through trends in investment and government expenditure. In particular, we set out to examine whether credit market conditions, on the one hand, and government fiscal policy, on the other hand, have adversely impacted private investment within the Gambian economy (i.e. whether a crowding out effect has occurred for the private sector).

We start by examining the data on government revenue and expenditures which is presented in Table I-9 for the period June 1986 to June 1992. Revenue is decomposed into domestic tax sources and foreign grants. The data indicate that the central government has realized a budget deficit based solely on domestic sources of revenue in every year (Table I-9, line 4a). Hence, the government has not been able to finance its expenditures solely from domestic taxes. Foreign grants received by the government are used to finance government expenditure, thereby reducing the burden of the fiscal deficit to such an extent to produce a surplus in 3 out of the past 4 years (Table I-9, row 4b). This has resulted in a budget surplus since 1990 of approximately 1.0 to 2.5 percent of GDP (Table I-9, line 7b). The government in effect has received foreign assistance beyond the levels needed to balance its budget.

Further, and more importantly, these inflows of grants must be sterilized or they will lead to increases in the money supply and eventually inflation. Given the absence of strong domestic taxes, sterilization occurs via the sale of T-Bills which draws purchasing power out of the economy. These T-bill sales add to future debt servicing charges and draws away deposit resources from the banking sector that could otherwise be used for loans. Therefore, any reduction in foreign grants would lead presumably to more deposit funds being available for loans since the sterilization role of T-bills sales would presumably slacken off.

2. Investment

Tables I-10, I-11 and I-12 contain data on the trends in private investment and government expenditure over the period 1987-1991. These data give some insight as to whether private investment has been crowded out in the Gambia. Over the period 1987-1991, the answer again appears to be, no, since real private investment has been increasing in Table I-10, column 1, (though still remaining at a relatively low level), while government investment and government expenditures in real terms have been declining since 1988 (Table I-10, columns 2 and 3). Private investment has increased over 300 percent during this period (Table I-11). However, this is still only approximately 7-8 percent of GDP (Table I-12). This is in marked contrast to most developed and developing countries where investment is approximately 15-20 percent of GDP. There has also been a sharp decline in real government expenditure (Table I-11, column 3). Further, since real GDP has been increasing over this period, it appears that much government expenditure in the early 1980's was used inefficiently. This is because real GDP has not been adversely effected by declines in real government expenditures. In contrast, it would appear that the more than three fold increase in private sector investment has been positively associated with the recent growth of real GDP.

3. Crowding Out and Tight Credit

These results do not, however, lead to the conclusion that no crowding out has occurred. Some financing of investment activity may not have occurred, as pointed out above, due to the presence of the T-Bill market. As we shall see later in the balance sheets of the commercial banks, there has been a substitution among assets from loans to T-Bills (i.e., from loans to the private sector to loans for the public sector). While the extent of unsatisfied investment demand cannot be calculated, insights into prevailing credit market conditions can be surmised.

First, we explore the degree to which tight credit conditions prevailed for private investment. In a situation where credit is tight, one would expect that the excess reserves of banks (i.e. reserves above the legally required minimum) would be high. This may not

be true for all banks since banks can buy T-Bills or lend money to each other. However, such interbank movement in reserves must eventually show up as reserves elsewhere in the banking system. Insights into this for The Gambia are set forth in Table I-13 highlighting the reserve and liquidity positions for the Gambian commercial banking system as a whole.

These data reveal that cash reserves have declined from 53 percent of liquid assets in 1987 to 28 percent in 1990 (row 2/row 1 in Table I-13). Excess cash reserves were 73 percent of excess liquidity in 1987, but only 2.6 percent in 1990 (row 8/row 9). Banks held practically no excess cash reserves in 1989 and 1990. All excess liquidity was held in the form of T-Bills in these years. Hence, excess cash reserves have been used to buy T-Bills and not used for the purpose of making loans.

This rapid decline in excess cash reserves is a direct result of the monetary policy of the Central Bank. The Central Bank (CBG) in attempting to sterilize foreign exchange inflows (i.e. such as foreign grants and aid loans) has offered T-bills at biweekly auctions. Commercial banks have responded and have purchased these instruments and, in so doing, drew down their excess reserves. Given the minimum denomination of 5,000 dalasis for T-bills, banks are the principal participants and purchasers in these auctions. This has led to reduced loan demand (due to rising interest rates) and a reduced supply of loanable funds (through the reduction of excess reserves that could otherwise have been used for lending). In short, some potential borrowers very likely have been crowded out of the market for loanable funds.

Further, these T-bill sales could have been reduced in volume in so far as the volume of donor aid used to support government expenditures has been greater than that necessary to balance the budget (see Table I-9). Bankers, on the other hand, are rational profit maximizers. They logically respond to incentives. Investing in high rate of return, risk free assets like T-Bills makes sense given the risks and costs related to loan evaluation and loan recovery. It is also of interest to note that in the United States and most countries with developed financial markets, the interest rate differential between 3 month deposit rates and 3 month T-bills is negligible, whereas in The Gambia there is a six point spread (6 percent) in favor of T-bills. This large spread in favor of T-bills could eventually induce some depositors to withdraw their deposits from the banking system to purchase these securities directly thereby earning more return than that associated with holding deposits. To date this has not happened on a significant scale (in 1990 only 3 percent of T-bill sales were accounted for by the non-bank public at large, in Table I-14), but in time this could grow if this spread remains or if the minimum T-bill denomination is reduced.

An interesting counterfactual question is to estimate the volume of additional funds that could have been lent out to private borrowers in the absence of such a monetary policy. First, we could look at this in an ex-post sense by asking what could be lent out from the existing excess cash reserves in the banking system. The value of the M2 money multiplier

in 1991 was 2.46.[2] Data from Table I-13 indicates that excess cash reserves (line 8) in 1991 was 13.18 million dalasis. If we assume that all of this could have been lent out, an additional 33.74 million dalasis in loans would have been issued in 1991. This would have amounted to 12 percent of the outstanding loan balances in the banking system in 1991, a not inconsiderable amount. Undertaking the same exercise for an earlier year like 1988 when the excess cash reserves in Table I-13 was 19.74 million dalasis and the money multiplier was 2.64, an additional 52.11 million dalasis could have been lent out representing 20 percent of the loan balances of the banking system in that year.

Next, if we were to look at the ex-ante rather than the ex-post excess liquidity, banks would have the additional option of not buying T-bills and instead issuing loans. This, of course, would generate a substantially larger amount that could have been lent out, especially from 1988 onwards, given the rapid growth of T-bill purchases by the banking system (line 5 of Table I-13). However, given the attractiveness of the risk return option associated with T-bills compared to loans, banks opted for the former rather than the latter.

However, the findings above also reveal that it is difficult to judge what would happen to the loan portfolio if T-Bills were to lose their attractiveness or their availability reduced. For example, in 1987 and 1988 banks were willing to hold excess cash reserves (Table I-13). Even in the absence of attractive relative returns on T-Bills during this period, banks appeared unwilling to expand lending in the loan market. After 1988, banks shifted almost all excess reserves into the T-Bill market and appear to have substituted T-Bills for potential new loans from this time onwards (Table I-14). This strongly suggests that the rate of return to loan assets must have been low relative to T-bills. (This will be corroborated later in section X-3). Furthermore, interviews in the merchant community by the OSU team indicate that in 1990 and 1991 with the widening divergence between Gambian and foreign interest rate levels generated in large part by the substantial sale of T-bills, prime borrowers have chosen to borrow from a cheaper foreign market, rather than use the more expensive local market. This clearly reduced the local demand for loans.

The policy implications of such findings are not entirely straight forward. On the one hand monetary policy has led to a reduction of excess reserves that could have been used for lending. However, a reversal of this policy (i.e. one of increasing excess reserves) may not lead to new loan activity since banks may be unwilling to lend in a loan market

---

[2] The formula for the money multiplier is as follows (see Mishkin, 2nd edition, p. 283).

$$\left[1+\frac{C}{D}+\frac{T}{D}\right]\Big/\left[\frac{C}{D}+Rd+Rt\left(\frac{T}{D}\right)\right]$$

in which: C	=	currency held by the public (168.9 million D);
D	=	demand deposits (165.4 million D);
Rd	=	reserve requirement on demand deposits (.24);
Rt	=	reserve requirement on time deposits (.08);
T	=	time deposits (249.8 million D).

perceived to contain high risks and low returns. It is clear that banks are engaging in severe loan rationing practices in this high interest rate milieu. Further, given the high level of currency held in the hands of the public, as we will note later in this analysis, an increase in reserves will not necessarily lead to a large increase in the supply of loans. These implications indicate that there are other features of both the Gambian economy and the financial system that need to be improved to expand financial deepening and financial intermediation. These other features include expanding the scope and range of financial services through increased competition in the supply of financial services and financial intermediaries (more banks and more branches); increasing the use of demand deposit facilities, especially in rural areas; increasing the number of participants bidding in the T-bill auctions to lower T-bill rates, and overall interest rates; and improving the rate of economic return and reducing the risks for productive enterprises to increase the demand for loans (and reduce loan rationing).

4. Problematical Sterilization Efforts

Another area of policy concern is the failure of the T-Bill market to effectively sterilize foreign exchange inflows. This is documented in Table I-15. The data in this table indicate that while domestic credit has declined substantially since 1986, net foreign assets (i.e. foreign exchange reserves generated by donor grants and other foreign exchange inflows) has been increasing. Moreover, the increase in net foreign assets has been larger than the corresponding decrease in domestic credit since 1987. This has lead to increases in the money supply represented by M2 in Table I-15. Complete sterilization would lead to a situation whereby a 1 percent increase in net foreign assets is matched by a 1 percent decrease in domestic credit. Furthermore, increases in the variable "other items" (column 3) has also led to increases in M2. The variable "other items" documents how the CBG balances its monetary accounts. This reflects the revaluation of foreign assets and liabilities in dalasis derived from exchange rate movements during the year in question. Among other things, the growth of this domestic currency component of the money supply highlights the growth and revaluation of foreign donor inflows over this period. Column 5 indicates that the government has undertaken stabilization measures through the rapid increase in the volume of T-bills sold. However, this has not been sufficient to offset the rapid growth in the money supply. To contain this growth in the money supply, an effort should be made to reduce the need to build up foreign exchange reserves beyond the levels currently in force.

5. Econometric Analysis of Monetary Policy Issues

In this section we report the results of some simple econometric models that were estimated to examine the relationship between the components of M2 (private domestic credit, net credit to government, net foreign assets, and net other items) and other

macroeconomic variables. The purpose of these exercises is to explore the behavior of the monetary authorities (i.e. the Central Bank). We estimate models that are similar to those used by Maxwell Fry in his analysis of Turkish monetary policy (Fry 1988, Chapter 9). The first model estimated is private domestic credit. The equation estimated is:

$$DDPC = a + b*DNY + c*DRES + d*DGC + LIB + LIBY + LIBR + LIBG \quad (1)$$

where DDPC is the first difference of domestic private credit; DNY is the first difference of nominal GDP; DRES is the first difference of official gross foreign exchange reserves; DGC is the first difference of net credit to government; LIB is a dummy variable which takes on the value of one over the liberalization period 1987-1991; LIBY, LIBR, LIBG are dummy variables that modify the slope coefficients b, c, and d respectively over the period 1987-1991. We transform the variables into first differences, since many of the variables had negative signs.

Equation 1 is estimated using ordinary least squares over the period 1967-1991. The results are presented below (with t-statistics in absolute value in parentheses):

$$\underset{(2.15)}{a = 14.75} \quad \underset{(2.47)}{b = 0.002} \quad \underset{(0.58)}{c = -0.21} \quad \underset{(3.59)}{d = -0.74} \quad (2)$$

$$\underset{(0.09)}{LIB = 4.17} \quad \underset{(2.53)}{LIBY = -0.006} \quad \underset{(1.52)}{LIBR = 0.59} \quad \underset{(1.72)}{LIBG = -0.76} \quad R2 = 0.76 \quad DW = 1.12$$

These findings indicate that increases in nominal GNP (coefficient *b* above) lead to expansion of private credit, while increases in net credit to the government (coefficient *d*) reduced private credit. This is seen in the strong statistical significance evident in the high t-statistics in the parentheses. Changes in foreign exchange reserves (coefficient *c*) had no significant impact on domestic private credit as seen in the low t-statistic. The dummy variables for the effects of nominal GDP and net credit to government during 1987-91 are also statistically significant. Hence, increases in nominal GDP dampened domestic credit over the period 1987-1991. This suggests that domestic private credit has not kept pace with the growth of GDP during this recent period. This was brought out in our earlier descriptive analysis and is confirmed here. The substitution between private and government credit is even stronger over the period 1987-1991. Increases in foreign exchange reserves have had a positive, but a statistically weak impact on domestic credit expansion in the liberalization period.

The second model examines the sensitivity of the monetary authorities to inflation. One would expect that increases in the inflation rate would lead to reductions in net credit to government thereby dampening money supply increases which in turn would lead to lower inflation rates. The model is as follows:

$$DGC = a + b*DP + LIB + LIBP \quad (3)$$

Where DGC is the first difference of net credit to government and DP is the inflation rate measured by the change in the implicit GDP deflator and LIBP is a dummy variable that modifies the coefficient *b* and LIB modifies the constant *a* during the liberalization period.

The estimates are:

$$\underset{(0.95)}{a = 7.48} \quad \underset{(0.53)}{b = -0.20} \quad \underset{(1.51)}{LIB = 59.62} \quad \underset{(3.44)}{LIBP = -2.72} \quad R2 = 0.73 \quad DW = 2.62 \quad (4)$$

The coefficient on DP (coefficient *b*) is negative, but not statistically significant. However, we do find such a relationship during the liberalization period. Higher inflation rates lead to a reduction in government credit. In short, the monetary authorities have been sensitive to the danger of inflation and have reduced government credit in the face of higher inflation rates during this period.

The next issue examined is sterilization and the relationship between net foreign assets and macroeconomic variables. The model estimated is:

$$DNFA = a + b*DDC + c*DRES + d*DFNA(T-1) + e*DNY(T-1) + LIB + LIBD + LIBR + LIBY \quad (5)$$

where DNFA is the first difference of net foreign assets, DDC is the first difference of net domestic credit with the other variables as defined earlier.

The estimates are:

$$\underset{(1.02)}{a = 16.82} \quad \underset{(3.05)}{b = -1.57} \quad \underset{(0.36)}{c = 0.25} \quad \underset{(1.26)}{d = -0.20} \quad \underset{(0.83)}{e = -0.004} \quad \underset{(0.51)}{LIB = -60.67} \quad \underset{(1.12)}{LIBD = 1.08}$$

$$\underset{(0.05)}{LIBR = -0.04} \quad \underset{(1.62)}{LIBY = 0.008} \quad R2 = 0.85 \quad \underset{(0.25)}{QSTAT = 7.81} \quad (6)$$

Consistent with the monetary theory of the balance of payments, the estimates reveal that there exists an inverse relationship between domestic credit and net foreign assets (coefficient *b*) indicating that some sterilization has taken place. However, this sterilization has been dampened substantially in the liberalization period (i.e. the t-statistic is low and statistically insignificant under *LIB*). Moreover, increases in foreign exchange reserves have had no significant impact on net foreign assets. Further, there is a small positive impact on net foreign assets through changes in nominal income during the liberalization period as predicted by the monetary theory of the balance of payments.

Our final model examines the determinants of the "other items" category. The model estimated is:

$$DNOI = a + b*DNFA + c*DNOI(T-1) + LIB + LIBF \quad (7)$$

where DNOI is the first difference of net "other items," LIBF is a dummy variable that modifies the coefficient *b* with the other variables are as defined.

The estimates are:

$a = -7.83$	$b = -0.79$	$c = 0.003$	$LIB = 47.45$	$LIBF = 0.66$	$R2 = 0.83$	$QSTAT = 3.57$
(1.22)	(8.73)	(0.02)	(1.79)	(2.92)		(0.73)

(8)

Decreases in net foreign assets contributed to increases in net "other items." However, this finding is lessened during the liberalization period. The positive estimate of LIBF indicates that increasing net foreign assets leads to an increase in net "other items." This confirms the point made above that revaluation of the dalasi has lead to increases in net "other items."

These simple econometric exercises lend support to the findings brought out in the descriptive analysis presented in the earlier tables above, namely: (1) credit has not kept pace with the increases in GDP; (2) the government has been responsive to the high rates of inflation from mid decade onwards; (3) the government has tried to sterilize the impact of foreign exchange inflows, but has not been completely successful in doing so during the period of liberalization; and, (4) the revaluation of foreign assets has led to increases in the money supply.

The findings also imply that the monetary authorities have undertaken a more monetarist approach to macroeconomic policy since 1987. This is to be expected given the goals of the structural adjustment programs. However, the analysis also reveals that two major policy concerns remain. One is the failure to sterilize sufficiently foreign exchange inflows and, second, related to sterilization, is the impact of credit contraction on private investment. Both areas require attention by policy makers if The Gambia is to achieve long run economic growth.

VI. TRENDS IN SECTORAL CREDIT

Trends in real commercial bank credit extended to major economic sectors are set forth in Tables I-16 and I-17. Given the absence of data on new loans issued each year (a flow measure), we use loans outstanding (a stock measure) as of June of each year. All sectors have experienced substantial contractions from the mid 1980s to the present. Real outstanding loan balances have declined dramatically for agriculture and construction from the mid-1980s, while services have experienced the least decline. The transfer of loans to the

managed fund , as noted above, also contributed to this decline in 1987. The magnitude of such transfers were set out earlier in Table I-8. In the case of agriculture, fishing, tourism, construction, and others in Table I-8, these transfers are a substantial percentage of loans outstanding in 1987. However, it should be noted that many of these are nonperforming loans and hence, bias the credit balance data. Much of the credit given by the GCDB may not have been utilized in the stated projects or such projects themselves may have failed.

The sectoral growth trends of GDP were presented earlier in Table I-7. To review those findings, again the growth of industrial GDP, of which construction is a large part, had been low from 1981 to 1985 with a substantial recovery from 1985 to the present. The growth of services was modest from 1981 to 1985, but quite high from 1985 to the present. The growth of agricultural GDP was rapid from 1981 to 1983, then declined to 1986 after which time a new two year spurt of growth was recorded to 1988, followed by modest growth to 1990. However, in 1991 there was a sharp drop in agricultural output. An interesting question is whether there is a correlation between the trends in sectoral credit and sectoral economic growth.

A rough proxy answer to this question can be gained by examining the credit to GDP ratios in Table I-18. Ideally, one would like to compare a flow measure of new loans issued each year (by sector) to the flow measure of value added (by sector) in the national accounts to gain some insights into the rough correlation between sectoral credit flows, on the one hand, and the generation of sectoral value added each year, on the other hand. Unfortunately, we are forced to use a less satisfactory stock measure (i.e. loans outstanding) by sector which includes previously accumulated past debt (including non-performing bad debt). With these limitations in mind, agriculture registered a credit to GDP ratio of 52 percent in 1981, but only 8.6 percent in 1991. In contrast, the service sector recorded a ratio of 22 percent in 1981 and only 7 percent in 1991. Even in face of the measurement caveats mentioned above, credit clearly is not correlated with GDP growth.

The extremely high credit to GDP ratio in the agricultural sector in the early 1980s must be reflecting an inefficient use of resources. It is difficult to imagine a relatively low productivity, undercapitalized agriculture (as in The Gambia) using credit equivalent to 50 percent of its output during this period. Much of this credit was likely diverted to other uses and, of course, much was not repaid. No doubt much of this credit was issued to cover the operational costs and losses of The Gambia Cooperative Union (GCU) rather than issued directly to farmers. Furthermore, the low ratios recorded in the mid to late 1980s for the agricultural sector occurred when high rates of agricultural growth were registered. This underscores the lack of any clear association between credit balances and growth in the agricultural sector.

Having said that, however, one can still associate the trends in sectoral credit with important developments in the Gambian economy over this period. Additional insights can be derived from the subsectoral trends documented in Tables I-21, I-22, and I-23. For purposes of our discussion, the indices of growth in real credit balances in Table I-22 will

be highlighted. Transport and tourism investment grew in the first half of the decade due to loans to the GPTC and GPA (in the transport sector) and the building of the Senegambia Hotel and other tourism facilities. At mid-decade, the GCDB loaned substantial amounts to major fishing enterprises and the GCDB also made substantial loans to contractors in 1985/86 to finance a two year spurt in public works.

The post 1986 period reflects the period of growing liberalization of trade and a floating exchange rate regime. This brought on higher interest rates and dampened the demand for trade credit. Agriculture, of course, experienced the largest decline in real credit as pointed out earlier. This reflected major declines in credit from the Central Bank to the GCDB and the successive write off of GCU and GPMB loans from the mid-1980s onwards. This finally reduced the agricultural share of outstanding credit balances from a preponderant 30 to 35 percent in the early 1980s to 8 percent in the early 1990s (Table I-23). Indeed, this sector's share shrank from the largest to one of the lowest sectoral shares over this ten year period. Yet, as mentioned above, this apparently had no visible impact on agricultural output (until 1991) due to the compensatory offset of favorable prices for groundnuts in the world market.

VII. SECTORAL ALLOCATION OF CREDIT BY BANK GROUP

Information on bank loans to selected subsectors of the economy are set forth in Tables I-24, I-25, and I-26. Table I-24 documents bank loans in real terms (i.e. in constant 1976/77 dalasis) from 1981 to 1991 for The Gambian Commercial and Development Bank (the GCDB), i.e. the public sector development bank, and the two private sector commercial banks taken as a group (i.e., the International Bank of Commerce and Industry (BICI) and the Standard Charter Bank of Gambia (SCBG)). Table I-25 sets forth the indices of growth or decline of real credit by subsectors for these two groups of banks over the decade. Finally, Table I-26 highlights the relative share of credit within each sector by each bank group over this period. Tables I-25 and I-26 will be principally drawn upon to underscore the key trends discussed below.

First, Table I-25 indicates the dramatic decline in real credit discussed earlier. Columns 17 and 18 of Table I-25 show a two thirds decline in real credit for the GCDB and a one-third decline for the other commercial banks over this period. This growth profile indicates two distinct periods, for the two groups of banks. During the first half of the decade, (up to 1985), real credit balances in the GCDB generally fell much less than the declined recorded for the other banks in most subsectors. Overall (columns 17 vs. 18), the GCDB only registered a slight decline in its real credit balances up to 1985 while credit balances in the other banks declined to 60 percent of their 1981 levels. The GCDB actually registered increased credit balances in the relatively important subsectors of services, construction, and trade activity, and maintained the real value of its credit balances in the transport sector and for personal loans. Only in agriculture (the most important subsector in its

portfolio, accounting for 40 percent of its total portfolio in 1981 and 36 percent in 1985) did the GCDB register an important decline in its credit balances to 80 percent of its 1981 level, thereby generating the slight decline overall. The other commercial banks recorded significant declines in their credit balances in the transport, trade and construction subsectors and increases in agriculture, tourism, and personal loans. The former outweighed the latter to register a substantial overall decline for these banks in the first half of the decade.

The second half of the decade generated a sharp decline in the credit balances of the GCDB (1985-6 to 1991) for practically all subsectors in Table I-25. Only the credit balances for tourism registered an increase during this period registering the outstanding credit balance for the GCDBs largest borrower, a hotel owner (who shortly became its largest defaulter). Dramatic declines were recorded for important subsectors such as agriculture, transport and construction. Less but still significant declines were recorded for trade, services and personal loans. In sharp contrast, the other private sector commercial banks recorded increased credit balances by the end of the decade in the three most important subsectors for their credit activity (services, trade and personal loans). At the same time, they increased credit twofold for agricultural activity, a sector that generally represented a minor share of their portfolios throughout the decade. Only tourist finance registered a decline in the second half of the decade. In the aggregate, the private banks generally maintained their overall real levels of credit balances throughout the second half of the decade while the GCDB was experiencing massive declines in the levels of its recorded balances.

Table I-26 highlights the changing relative shares of bank credit balances within each subsector for the two bank groups under analysis. It is to be expected that the relative shares would shift between these two bank groups in light of the differential growth profile outlined above. In 1981, the GCDB accounted for 80 percent of the outstanding credit balances in the Gambia (Table I-26, column 17). However, during the course of the overall decade decline in real credit balances, the GCDB accounted for only 67 percent of the total in 1991. The relative share for the private commercial banks rose from 20 to 33 percent over this period.

In 1981, the GCDB provided practically the entire credit balance for the agricultural and the transport sectors. In addition, it accounted for a substantial majority of the credit balances allocated to tourism and personal loan activity. The two bank groups held roughly equal shares of the credit balances for construction and service sector activities. Only in the trade sector did the private commercial banks account for a majority of the outstanding credit balance in 1981.

By 1991 the overwhelmingly predominant position of the GCDB was reduced in the allocation of credit balances to the agricultural and transport subsectors as the private banks accounted for 20 and 44 percent of these credit balances respectively. At the same time, these banks increased their relative shares substantially in the credit balances allocated to construction activities and personal loans. Only in tourism did their share of credit balances decline relative to the GCDB.

In summary, the overall decline in outstanding real credit balances from 1981 to 1991 saw the GCDB experience a sharp relative decline by 1991 to only one third of its level of outstanding balances recorded in 1981 while the private bank group declined to only two-thirds of their 1981 levels. This differential decline in favor of the private bank group grew out of the structural adjustment mandate to reduce the excessive expansion of credit that has characterized the early 1980s, especially through the public sector (i.e. the GCDB). This decline in the institutional supply of credit through the GCDB to parastatal and private sector clients was reinforced by periodic write-offs of bad debt in the GCDB portfolio further reducing its share of outstanding balances. In the end, the private commercial banks increased their relative share of credit balances in all major subsectors except tourism before the GCDB terminated operations in 1992.

VIII. FINANCIAL DEEPENING INDICATORS

An important indicator of the growing complexity of an economy is the degree of financial sophistication and the spread of financial market instruments. This is commonly measured by examining the growth of money aggregates and the ratio of money to GDP, the velocity of money, and the relationship between currency and deposits. The relevant data are reported in Tables I-27 to I-30.

The annual fluctuations of the conventional monetary aggregates, M1 (currency and demand deposits) and M2 (M1 + time deposits), in Table I-28 reveal that these indicators experienced double digit growth for most years in the past decade. For example, the change for both measures has been in double digits for all but one year in the most recent seven years. As pointed out earlier in our discussions of Table I-15, the continuing double digit growth in 1990 and 1991 suggests that the sterilization efforts of Central Bank authorities have had limited effectiveness in containing the level of M1 or M2 since 1989. In general, it may take a year or so before changes in the money supply finally generate comparable changes in the price level. Four years of high rates of growth of these money supply indicators from 1985 to 1988 clearly led to the high rates of inflation recorded in 1986 and 1987. By the same token, the decline in their growth from 1987 to 1989 eventually led to a comparable decline in inflation from 1987 to the present. However, the resurgence of growth of these aggregates in 1990 and 1991, reversing the trend from 1987 to 1989, create the likelihood that the currently low rate of inflation recorded for 1991 may rise in 1992 and 1993. Moreover, growing rates of growth of the money supply not only generate inflationary expectations, but also put pressure on authorities to depreciate the exchange rate and keep nominal deposit rates high to forestall capital flight. Gambian authorities have been particularly sensitive to maintain domestic interest rates sufficiently high to prevent capital flight.

As we have seen from our documentation of the decline in credit balances, the nominal growth of these money aggregates (in Table I-28) has not led to a comparable nominal increase in loans (see Table I-3). Deposits have been growing, but not loans. This

suggests that increases in the excess reserves of banks is used to purchase other assets (as has been noted) and not expand loans. Nominal deposit growth has not led to increased financial intermediation. The classic measure of financial deepening, i.e. the ratio of M2 to GDP has been fairly constant averaging 20 percent to 24 percent over the period 1981 - 1991, while (as we shall see shortly) loan deposit ratios have been declining. This implies that velocity has also been constant over time. Hence, the relationship between money and nominal income is valid (i.e. changes in money influence changes in nominal income) as are other monetarist propositions. Another important ratio is that of currency to demand deposits. This ratio indicates the willingness of individuals to hold money versus a near substitute for money (checking account deposits). This ratio is influenced by wealth, the degree of business development, and the relative cost of holding money. In The Gambia this ratio is close to or has exceeded 1.00 over the past 11 years. In contrast, this ratio has fluctuated between 0.40 and 0.45 for the United States and is well below one for most developing countries. The importance of this ratio is that increases in this ratio (i.e. increases in currency drawn from deposits) reduce the money supply since it reduces the value of the money multiplier and leads to a smaller expansion of deposits. This in turn can lead to contractions in nominal income.

This finding also implies that many transactions are undertaken using cash rather than checks in The Gambia. There appear to be several reasons for this. First, and foremost, almost all of the groundnut buying activity is undertaken with cash. Second, demand deposits are not well developed throughout The Gambia due to the concentration of commercial banks in the Banjul area (i.e., a marked urban bias). Third, informal or parallel trading activities in The Gambia are largely carried out in cash so that their activities are not officially recorded. In sharp contrast, the ratio of currency to quasi-money (in column 2 of Table I-30) is less than 1.00 (0.66 in 1991). This ratio is sensitive to the interest rate on savings and time deposits and would decrease as interest rates on deposits rise.

IX. INTEREST RATES IN THE GAMBIA

Interest rates are one of the most important prices in the economy. Interest rates on deposits and savings instruments influence and shape the mobilization of savings in a society leading either to financial deepening or shallowing. Interest rates on loans influence the allocation of resources to different investment alternatives affecting the rate of growth of an economy. Also, interest rate margins between average deposit and loan rates reflect the degree of competitiveness in the financial sector and the profitability of banking. Finally, the differential between the level of domestic interest rates and international interest rates can influence capital inflows and outflows for an economy, thereby affecting the capital account in the balance of payments and the availability of funds for domestic investment opportunities. All these roles and functions of interest rates have been important in The Gambia and will be examined here.

1. Government Securities and Savings

Data on interest rates are presented in Tables I-31 through I-35. Interest rates are documented for the following categories: government securities, the discount rate, lending rates for selected subsectors of commercial activity, and deposit rates. Table I-31 sets forth the nominal rates for these instruments, government securities and loans. Table I-32 adjusts these rates for inflation and presents a series on the real rates of interest ruling for the past 10 years. The following analysis will focus on the real rates documented in Table I-32 for savings and government securities.[3]

Real rates of interest on 3 month T-bills and long term government bonds have been largely negative over the period 1981-1987. These rates have been positive in real terms since 1988. The discount rate has followed a similar trend. Examination of the rates paid to savers reveals that out of the past 11 years there have been 7 years of negative real rates for savings deposits and three month time deposits. The cyclical nature of the changes in real rates (between negative and positive) has introduced instability and uncertainty into choices made by savers. Savers have been penalized by such fluctuations, on the one hand, and by negative real rates, on the other hand. Investor-savers in government T-bills benefit substantially more than depositors, particularly lower income depositors saving in short term deposit instruments. Moreover, short term depositors have been penalized more than long term depositors, since real long term rates have been greater than short term rates. This implies that the yield curve for savings accounts is upward sloping. A rising yield curve may be due to the rising inflation expectations of savers and/or a premium offered by banks to attract longer term deposits. Finally, the discount rate in recent years has exceeded the savings rate which implies that it may be cheaper for banks to mobilize savings than to borrow from the Central Bank. Indeed, only the GCDB (as will be shown shortly) has borrowed from the Central Bank (i.e. used the rediscount window).

2. Lending Rates

The profile of real lending rates in Table I-32 reveals that from 1984 through 1987 almost all lending rates were negative in real terms favoring borrowers, regardless of subsector. In 1988, real lending rates become positive. From 1988, interest rates have

---

[3] For the real interest rate series reported in Table I-32, inflation was measured with the consumer price index (CPI) of inflation. The formula used to derive the real rates of interest was as follows:

$$\left[\frac{1+i}{1+p}-1\right]x100$$

where i = the nominal rate of interest and p = the annual change in the CPI index of inflation.

remained positive, increasing each year to a high level in 1991. The lending rates in 1991 are relatively "high" relative to the 1980's. In summary, savers were subsidizing borrowers substantially from roughly 1984 through 1987 as the impact of inflation on the structure of nominal interest rates in The Gambia penalized (i.e. taxed) savers and favored (subsidized) borrowers. Very likely, this same pattern characterized the period 1981-83, however, we were unable to document detailed lending rates during the early 1980s in Table I-31. Only from 1988 onwards can it be said that borrowers were beginning to pay a relatively high rate of interest reflecting the probable opportunity cost of capital.

The current level of interest rates has become an important issue in The Gambia because it is perceived that lending rates are currently too high, depressing loan demand and presumably dampening economic growth. In part, this perception no doubt reflects the abrupt change from a previous low rate milieu to one of significant positive rates, particularly in 1991. In addition, any analysis of lending rates should include a consideration of risk and take into account the important relationship with 3 month T-bills, a risk free asset. Interest rates for lending are directly related to 3 month T-bills and only differ for three important reasons: risk, liquidity and the cost of loan administration.

The difference between higher lending rates and lower, risk-free T-bill rates represents a premium that lenders receive for undertaking risky loans and/or forgoing some degree of liquidity. However, the government's concern to sterilize the potential inflationary impact of growing foreign exchange inflows, during this period of structural adjustment, induced authorities to aggressively create a T-bill market from 1986 to the present. This led to some anomalous results as can be seen by comparing the T-bill rates in column 1 of Table I-31 to the loan rates in columns 10 through 14. Contrary to expectations, some but not all loan rates were actually below T-bill rates in 1986 and 1989. They were only negligibly above them in 1988 and 1989 when the premium on risk and liquidity averaged only two percent. In short, there was no reasonable rate differential to cover risk and liquidity considerations in loan markets during this period. This was clearly a contributing factor in the decline of outstanding credit balances and the rise in T-bill holdings in commercial banks from mid-decade onwards as discussed earlier. Only in 1990 and 1991 did a realistic risk premium finally emerge in loan markets increasing to 5.75 percent in 1990 and 6.50 percent in 1991. However, this in turn created another issue in Gambian financial markets, namely the controversy surrounding the alleged high structure of loan rates in the country. We will explore this issue shortly.

3. Gross Intermediation Margins

The gross intermediation margin between average deposit and loan rates offers a valuable insight into the competitiveness of Gambian financial markets. Tables I-33 and I-34 set forth the components that allow us to generate the interest rate margins reported in Table I-35. Table I-33 presents the nominal and real deposit rates weighted by the relative

volume of demand, savings, and time deposits in Gambian financial markets. Two estimates of these weighted deposit rates are set forth: one, making allowance for the relevant reserve requirements on these deposits and the other ignoring these reserve requirements.

The weighted real rates on deposits (columns 2 and 4) reported in Table I-33 are generally negative throughout the past decade. High inflation rates rapidly erode the purchasing power of demand deposits and reduce the real return on savings and time deposits. It is clear from the earlier data on savings instruments in Table I-32 and the weighted averages in Table I-33 that savers have been penalized (i.e. implicitly taxed) by holding their savings in Gambian deposits (and currency) in the past decade. During some years this implicit tax has been severe (1984 through 1987).

Table I-34 sets forth the nominal and real lending rates (with and without the 3 month T-bill rate) which are an average of commercial bank lending rates weighted by their sectoral shares of outstanding credit balances. These real weighted lending rates were frequently zero or negative in the mid-1980s. When this finding is combined with the finding above that real deposits were substantially negative during this same period, it is clear that savers were penalized (or taxed) to reward (i.e. subsidize) borrowers in the mid-1980s. Borrowers were given the privilege to borrow and repay at rates well below the rate of inflation because depositors and savers were being forced to accept a return even more substantially below inflation, thereby experiencing a loss in the purchasing power of their deposit holdings.

General knowledge about banking indicates that depositors and savers in deposit-based banks are substantially more numerous than borrowers (usually on the order of 20 or 30 to one). At the same time, these depositor-savers, on average, represent a lower socio-economic status than borrowers (who after all have to be creditworthy). Therefore, we can infer that the interest rate structure in The Gambia in the mid-1980s was responsible for a regressive transfer of income from lower income to higher income members of the Gambian population. Real lending rates, on average, have been positive since 1988.

The gross nominal interest rate margins averaged between 9 to 10 percent over the period 1984-89, but doubled to roughly 16 to 19 percent in 1990 and 1991 in Table I-35. A quick inspection of data in the International Monetary Fund's International Financial Statistics confirms that in 1990 and 1991 these are among the widest interest rate margins in all of Africa. Banks in more developed countries register 4 to 6 percent spreads. Most developing countries record spreads between 7 and 13 percent, very few above 15 percent. Thus in the more recent years, the Gambian financial markets have proved to be unusually profitable because of these unusually wide intermediation margins. This statement about profitability is true only if costs did not rise commensurately. There is no reason to assume they did. Certainly, the cost of funds did not rise much and there is no reason to imagine that administrative costs rose much in more recent years. The fact that several international private banks applied for licenses during the past several years underscores the

attractiveness of the Gambian market. The impact of these margins on profitability will be discussed shortly.

4. The Determination of Interest Rates in The Gambia

An important controversy in The Gambia today centers on whether the currently high loan rates documented above are too high, thereby choking off loan demand, investment and lowering the rate of growth. An important element in this debate is the T-bill market. It has been alleged that the T-bill rates are unusually high, thereby forcing up loan rates to maintain a realistic premium for risk and the loss of liquidity. This current level is allegedly an unacceptably high level discouraging loan demand and investment. This, in turn, raises the questions as to what determines the T-bill rate? Is this a competitive market? What factors are at play here? Do offshore financial markets influence the T-bill market in The Gambia? Only after testing some hypotheses concerning the determinants of the T-bill rate can one then consider if they are too high and, if so, what one should or could do about it.

A. Interest Rate Parity

The first hypothesis (i.e. interest rate parity) is based on the fact that The Gambia is an open economy. In an open economy with perfect capital mobility, the interest rate is determined by the following formula:

$$i_d = [(1+i_w)\ (1+e)]-1 \qquad (9)$$

where: i_d = domestic interest rate in The Gambia
i_w = rest of world interest rate
e = expected depreciation of the dalasis.

We tested various forms of this equation using U.K. (United Kingdom) and Gambian monthly interest rate data on 3 month T-bills and dalasi-pound exchange rates over the period from July 1986 to December 1991. We employed regression models and cointegration econometric techniques. We could find no statistically significant relationships that lend support to this hypothesis. Hence, we conclude that interest rate parity does not hold between the U.K. and The Gambia. We also examined whether a causal relationship existed between interest rates in the U.K. and The Gambia using a bivariate vector autoregression. Again, we could find no support that U.K. interest rates influence interest rates in The Gambia. Our findings are different from Walsh, who also drew upon an interest rate parity approach (Walsh 1991). Walsh collected information for the right hand side of the above equation to generate the hypothetical 3 month T-bill series in The Gambia (i.e. the left hand side of the equation) under the assumption that interest rate parity would hold. He then compared this simulated interest rate time series with the actual Gambian 3 month T-bill time series. He concluded that in some years they are similar, in other years

they aren't, but in general, he felt that the interest rate series in the U.K. were driving the Gambian series. It is important to note that he did not statistically test this hypothesis as we did. Moreover, we also drew upon a vector auto regression to test causality, which did not hold. In general, we conclude that the interest rate parity hypothesis does not hold for The Gambia. These results are consistent with those found for a number of other countries (Stein et. al. 1983; Thornton 1989; and Gregory 1987).

B. Government Deficits and Interest Rates

Another reason interest rates may be high may be due to large and persistent government budget deficits. This is termed the crowding out effect. Research in other countries has produced mixed results as to the impact of this effect and whether it exists. Similar, mixed results were found for the Gambia in section III above. However, the T-bill market has no doubt absorbed funds that could be used for loans to the private sector. In order to compete for such funds, the government must offer a high enough rate to be able to sell its securities.

C. Thinness of T-bill Market

Given the thinness of the market, another hypothesis could be that the rates on T-bills may not be determined under competitive market conditions. This was brought out earlier in Table I-14. The commercial banks (primarily only three institutions for most of this period) account for 63 percent of the T-bill market, with private individuals and firms accounting for only 3 percent of T-bill purchases. Public enterprises comprise another 28 percent. This evidence offers an insight as to why higher interest rates are observed. Namely, it is in the interest of and within the power of a limited number of dominant holders (i.e. the banks) to establish the observed high rates through coordinated bidding in the auction markets.

D. The Fisherian Approach

Interest rates may also be high due to expectations of higher inflation rates in the future. This is the Fisherian view and can be expressed as:

$$i_n = i_r + P_e \tag{10}$$

where i_n is the nominal interest rate, i_r is the real interest rate and P_e is the expected rate of inflation. One might expect that lenders have not forgotten the inflationary 1980's and may not yet be convinced of the government's commitment to policies to lower inflation. Given the growth of the money supply noted earlier, monetary policy is not as tight as commonly thought. In particular, one would expect a tight monetary policy to produce high interest rates, but given that monetary policy is not that tight, inflationary expectations may not be lowered. We formally tested Equation 10 using regression and cointegration techniques and could not find any statistical support for the Fisherian view in The Gambia.

E. Linkage Between Deposit Rates and T-bill Rates

Finally, interest rates may also be high due to increases in deposit rates which in turn would put pressure on T-bill rates and hence lending rates. As banks attempt to attract more deposits by raising interest rates, the relative return on T-bills falls, making them less attractive to investors. T-bill interest rates must rise in order for the government to sell its securities. As these rates rise, banks attempt to attract more deposits so that banks can purchase more securities. However, it is widely acknowledged in The Gambia that commercial banks are currently discouraging the mobilization of saving and time deposits which clearly weakens support for this hypothesis. Furthermore, the long history of penalizing savers to reward borrowers (evident in Tables I-31 and I-32) weakens this hypothesis.

F. Summary

Statistical testing of two major hypotheses of interest rate determination (i.e. interest rate parity and the Fisherian approach) have not been upheld for the Gambian economy. This strongly suggests that interest rates are determined by some means other than international interest rates and domestic inflationary expectations. Among the alternative hypotheses reviewed above, we suspect that T-bill rates are high due to market imperfections resulting from a small number of buyers dominating the volume of sales in the T-bill market. The existence of this oligopolistic banking market also has contributed to the very high intermediation margins we observed in Table I-35.

Interest rates also influence the loan to deposit ratios which are presented in Tables I-36 and I-37. This ratio declines over time for all banks and the two subsets of the commercial banking system, i.e. the GCDB and the other commercial banks. This ratio is considerably less than one for the other commercial bank group and has fallen to one third by 1991. In the case of the GCDB, the ratio exceeds one indicating that government and donor based borrowings have been an important additional source of funds for the GCDB. This is borne out in Table I-37 when borrowings are included in the denominator of the loan to deposit ratio. This ratio is still high for the GCDB averaging 0.9 over the period 1986-1991. These ratios confirm the point made earlier that more deposits do not necessarily create more loans, especially for the private commercial banks in The Gambia. While high interest rates stimulate deposit mobilization, at the same time they curtail loan demand and/or induce loan rationing by banks to reduce the risks of adverse selection (i.e. selecting default-prone clients who gamble on risky investment schemes). Hence, rising interest rates from 1986 onwards can be logically associated with the declining loan deposit ratios in Tables I-36 and I-37. Furthermore, the recent high interest rate milieu leads one to suspect that banks may perceive an adverse selection danger in Gambian loan markets since bankers refuse to issue potentially profitable loans derived from high intermediation margins in place of lower return T-bill purchases. In brief, the recent spreads are not considered sufficient to cover the alleged risks of default, the costs of loan administration, and the loss of liquidity associated with loans. This remarkably low loan deposit ratio

scenario will now be documented in more revealing detail through analysis of bank balance sheets and income statements in the following section.

X. FINANCIAL PERFORMANCE OF THE BANKING SECTOR

1. Bank Balance Sheets

The consolidated balance sheets for all banks and the two subsets of banks are set out in Tables I-38 through I-40. However, the most revealing set of tables are those documenting the relative shares (i.e. the composition) of total assets and liabilities (Tables I-41, I-42, and I-43). These data reveal many important features of the banking system in The Gambia. First, loans have declined in relative importance in bank assets from 56 percent in 1986 to 38 percent in 1991 in Table I-41. This decline was more pronounced for the GCDB where loans made up 78 percent of assets in 1986, but were only 51 percent of its assets in 1991 (Table I-42). However, lending activity was a markedly larger activity for the GCDB than for the private commercial banks where the share of loans to assets were only 23 percent in 1986 and 25 percent in 1991 (Table I-43). These trends are in marked contrast to the United States where loans are the most important asset in commercial bank balance sheets comprising 60 percent of all assets (Mishkin, p. 163).

The other notable trend in asset composition has been the relative increase in government securities. Three month T-bills comprised less than 1 percent of bank assets in 1986, but accounted for 23 percent of the assets of the banking sector in 1991 (Table I-41). A marked difference occurs when the subset of banks is analyzed separately. The GCDB's share of government securities in Table I-42 was only 3.9 percent of its assets in 1991 compared to 42.2 percent for the private commercial banks (Table I-43).

On the liabilities side of the balance sheet, borrowings from the Central Bank as a share of liabilities has declined from 32 percent in 1986 to 8.5 percent in 1991 (Table I-42). Borrowing was only undertaken by the GCDB. These borrowings became a less important source of funds to the GCDB (Table I-42). They accounted for 53.4 percent of all liabilities in 1986, but only 17.1 percent in 1991. This decline in borrowings is consistent with the decline in donor sponsored financing of public sector entities from 1986 onwards. Conversely, demand, savings and time deposits have increased their share of liabilities for banks as a whole (Table I-41). The share of demand deposits increased from 16.7 percent in 1986 to 27.7 percent in 1991, while the saving and time deposits share increased from 24.5 percent to 38.2 percent. Hence, deposits account for 66 percent of all bank liabilities, a proportion similar to that found for the United States (Mishkin, p. 163).

Again, marked differences emerge between the subsets of banks. In 1986 deposits accounted only for 32 percent of the liabilities of the GCDB. By 1991, this had increased

to 45 percent (Table I-42). On the other hand, deposits accounted for 55 percent of all liabilities for the other commercial banks in 1986 and rose to over 85 percent in 1991 (Table I-43). This again reinforces the point that more deposits do not lead to more loans. The above trends do not necessarily imply that the actual growth of these line items in assets and liabilities is increasing or decreasing (it is possible for a line item to increase, but the total increases more, so its share declines). Hence, we examine the calculated percentage changes in Table I-44, which reveal that with respect to all commercial banks government securities are growing dramatically from 1989 to the present, while loans have fluctuated on a year to year basis. On the liability side, demand, saving and time deposits have been growing, while borrowings have been declining.

2. Savings and Demand Deposits

Of particular interest is the recent behavior of demand deposits and savings deposits, since commercial banks have undertaken a recent policy of discouraging such savings deposits by placing limits on the size of such deposits and on the interest rates paid on such savings (and time) deposits. Tables I-44 through I-46 document percentage changes in liabilities and assets. Demand deposits grew faster than savings deposits in 1991 for all commercial banks in Table I-44 (19.5 percent vs. 11.4 percent). However, disaggregated analysis indicates that demand deposits at the GCDB declined by 7 percent, while savings deposits increased by only 1 percent (Table I-45). The other commercial banks as a group increased demand deposits by 26 percent for 1991, while savings deposits increased by only 19.8 percent (in Table I-46). There appear to be two distinct forces influencing depositor behavior. First, there appears to have been deposit substitution from the GCDB to the other commercial banks, no doubt reflecting concern about the prospective closing of the GCDB. Second, depositors, by not being allowed to earn interest on term deposits beyond a maximum amoung, have increased their demand deposits. This may be in part due to a desire to keep their funds liquid, since they may feel they do not receive a sufficient premium for tying up a large amount of funds in time deposits.

These findings have serious implications for the Gambian financial sector and the economy. Are such savings discouraged due to the lack of bank competition or are such savings discouraged due to the absence of profitable loan opportunities? Very likely both elements are present, however, the lack of bank competition is most evident. There appears to be savings activity through NGOs in The Gambia, which is being utilized for investment activity, albeit on a small scale (see Chapters II and V). Moreover, it has been documented that existing banks are more interested in investing in T-bills than in making loans. Hence, additional bank competition could induce more competitive rates being paid on savings and remove existing restrictions on maximum amounts held in interest bearing time deposits and reduce the unusually wide intermediation margins. This is not to rule out the issue that rates of return to many investment activities may be low. This is one area that needs to

definitely be explored further, since there is no current systematically compiled information readily available on the returns to investment in the real economy.

3. Profit and Loss Positions of Commercial Banks

The profit and loss statements and associated performance measures are reported in Tables I-47 and I-48. First, one must recognize the limitations of these data. Interest earnings are reported on an accrued basis, rather than interest actually received. Hence, the GCDB reports substantial "accrued" interest income but much of this was never received, given its high levels of default. Accrued interest for private banks, however, very likely is close to interest actually received (given their low arrears). The first measure presented in Table I-48 is the gross margin as a percent of loans. The gross margin is the actual difference between interest received from loans minus the interest paid on deposits reported by banks in their income statements. These margins (in Table I-48, row 1) are well below the interest rate margins presented earlier in Table I-35 (6.7 percent versus 21 percent in 1990). Three factors could potentially explain this anomaly. First, many loans may not be performing loans (i.e. not paying interest). Second, many loans could be long term in nature with a lower interest rate than those applying to current loans and, third, deposits could exceed loans by a large amount. Data previously presented on the low loan deposit ratios indicate that the third reason is clearly operating here. At the same time, nonperforming loans clearly influence the results for the GCDB. Increases in the gross margin on lending are also consistent with the recent rise in lending rates, less competition for deposits, and the overall lack of competition for loans in the banking industry. The gross margin as a percent of loans is substantially higher for the GCDB than for the other commercial banks for two out of the three years in Table I-48. This supports the point that deposits are used more for purchasing government securities than for issuing loans by the other commercial banks.

The return on assets and equity, as conventionally measured, is the ratio of total profits to total assets and net worth, respectively. The return on assets for the system as a whole increased from 4.8 percent to 8.6 percent over the period 1988-1990 (panel 1, line 3 in Table I-48) and the return on equity (line 4) increased from 60.7 percent to 77.2 percent. These are extremely high returns by international standards. Industry-wide rates of return on assets for U.S. banks fluctuate around one percent in recent years. Returns on equity range from 10 to 15 percent. These profit measures in The Gambia also indicate that in 1990 the subset of other commercial banks had a higher return on assets than the GCDB (13 percent vs. 4.8 percent in 1990) and these commercial banks together had a higher return on equity than the GCDB (134 percent vs. 38.5 percent in 1990). However, we must keep in mind that these profit figures for the GCDB are grossly inflated since much of its reported interest income is fictitious (i.e., based on accrued interest). In reality, (as we shall see shortly in the next section) the GCDB was recording losses during this period. Surprisingly, the GCDB had a lower operating expense as a percent of assets (2.9 percent

in 1990) than did the other commercial banks (7.3 percent in 1990). This is clearly due to an inflated asset figure in the GCDB which would include a large portion of non-performing loans.

Further, it should be noted that "other income" (i.e., principally the returns on government securities and foreign exchange transactions) is very important to these banks. Without these earnings, the banks would have experienced considerably lower returns on their assets. If one were to assume that all operating expenses were associated with loan activity and none with "other income" generation, then profits as a percent of assets (excluding "other income") would be negative as can been seen in the last row in the panels in Table I-48. In brief, the rate of return on the loan portfolio would be negative, raising questions about the nature of the loan market in The Gambia. However, making the assumption that all operational costs are associated with loan activity is extreme. A more balanced assumption would allocate both interest expenses on deposits and administrative expenses proportional to the relative weight of loan and non-loan assets in the total portfolio of assets of banks. With this assumption, the rates of return on loan and non-loan assets are set forth in Table I-49. The return on non-loan assets far exceeds the return on loans throughout this period. If we ignore the misleading results for the GCDB (since all interest income is accrued even for a growing portfolio of non-performing loans) and concentrate on the results for the other private commercial banks, the rate of return on non-loan assets is far more stable and considerably higher than that recorded for loans. Thus, the previous conclusion is still valid though less extreme. Foreign exchange transactions and interest earnings on T-bills are primarily responsible for the high returns to banking in The Gambia. Thus, it is not surprising to note that banks emphasize these activities in their asset portfolio and downplay the importance of loan activity. More competition is needed to reduce the currently high returns to these activities. Lowering the minimum T-bill denomination from 5000 to 1000 dalasis could broaden the T-bill market beyond its current structure. Similarly, allowing non-bank foreign exchange houses or agencies to compete in the foreign exchange market could introduce more competition for this activity.

The other measures presented in Table I-48 also point to improvements in profitability. The debt to equity ratio has been declining (total liabilities to net worth), most notably for the GCDB. Capital adequacy (net worth as a percent of total assets) increased from 6 percent to 12 percent for the GCDB while for other commercial banks this measure declined from 13.4 percent in 1989 to 9.6 percent in 1990. However, this measure of capital adequacy for the GCDB should be evaluated after taking into account nonperforming loans. Such loans need to be deducted from both net worth (capital) and assets. This would reduce the numerator more than the denominator and thereby lead to a reduction in this ratio. Thus, it is clear that the GCDB has a much lower capital adequacy ratio than that reported in Table I-48. This inadequate capital adequacy for the GCDB reflects the high degree of moral hazard inherent to its portfolio. The GCDB as a public sector development bank was expected to take on risky projects as a part of its mandate despite the inadequate capital base to cover the potential losses that would be expected from these loans.

XI. THE GCDB AND ISSUES OF DEVELOPMENT BANKING

The GCDB story has been told many times before (see for example, Nathan Associates, 1988; Sarr, 1989). In this case, however, we examine the bank within the context of the various measures undertaken by the government to restructure the financial sector (and the economy) and the effects of those measures on the bank. This treatment also draws upon findings from balance sheets and income statements to underscore performance over the period 1981-91. Moreover these financial statements, in contrast to the CBG accounts for the GCDB used in the previous section, have been constructed from original GCDB data accounts in which interest income is not accrued but rather is counted only when actually received and, more importantly, accurate loan loss provisions are accounted for.

1. The Early Years up to the Early 1980s

Barely three years after its establishment in 1972, the GCDB had expanded its business in its existing offices (the Head office and Bakau) and had opened two new branches up-country (Farafenni and Basse). The short-comings in the Bank's bookkeeping and accounting systems that had persisted from the inception of the Bank were made much worse by this rapid expansion. Internal controls were weak, leading to serious problems of proper loan administration and oversight. The Bank was in violation of its own by-laws as it granted unsecured loans to a number of customers in excess of 25 percent of the aggregate amount of the Bank's unimpaired capital, and in excess of the unimpaired balance in its Reserve account. Most of these customers had started businesses in sectors that had been identified as top priority by the Government under its Five Year Plan, i.e., agriculture and small scale industry. During these early years, the bank was acting like the conventional supply lending finance institution. It issued loans in advance of an effectively established demand with reasonable prospects for repayment. All bank procedures and practices emphasized quick disbursement of funds to targeted priority areas with little attention to loan recovery. From its origins, the bank was a classic "borrower dominated" institution dispensing targeted subsidized credit in a manner that was compromising its future solvency.

Even at this very early stage in its development, the Bank began experiencing difficulties in getting customers to repay their loans. The most problematic borrower at the time (and the biggest debtor) was a customer who had borrowed money from the Bank against a Government guarantee - the outstanding balance in the account was eventually transferred to the Managed Fund Account in 1987. Unauthorized excesses were granted by the Bank where customers were permitted to draw over the agreed limit. Customers were granted excess overdrafts on lines of credit for foreign suppliers which led to serious exposure in foreign currencies. When local borrowers failed to pay their foreign suppliers, the bank was obligated to honor the foreign drafts. Development loans were extended prior to a detailed

appraisal of the project and the largest beneficiary eventually defaulted on his loan. The Bank has yet to collect from the three largest borrowers, in spite of several years of litigation.

Several key lessons emerge from this early growth history of the institution. First, governmental guidelines influenced the allocation of the portfolio. Second, leadership in the bank did not ahere to established conventions of commercial banking. Therefore, political influence and direction from the government frequently shaped the lending policies into welfare oriented projects and/or risky projects. At the same time, bank management found it difficult to document its income and expenses properly or track its portfolio repayments accurately. Furthermore, there was no constituency within the bank to play the disciplinary role of a strong depositor base or private stockholders. Similarly, international donors were contributing to the targeting of unviable clients through continued injections of subsidized lines of credit channelled through the GCDB for an agricultural clientele and small scale industry much of which became a non-performing clientele.

2. The Early 1980s

By the end of the fiscal year 1981, the underestimated accumulated provisions for loan losses had risen to D13.3 million. The Bank was barely operating within the statutory limits related to the liquid assets and capital adequacy ratios as required under the Financial Institutions Act, 1974 (FIA) and its operations were supported largely by borrowings from the Central Bank (CBG). These borrowings totalled three-and-a-half times the Bank's deposit base. Additionally, the aggregate of development loans had almost doubled the amount in the Development Fund. While at the beginning of 1980 authorities had introduced measures which were aimed at stimulating deposit mobilization and restraining credit expansion, the CBG continued to provide the GCDB with the liquidity to make more loans, notably for government supported activities in the 'productive' sectors of the economy.

Loans for agricultural purposes (which were almost exclusively made by the GCDB) remained at concessionary rates even at the start of the first comprehensive program with the IMF in November 1981. At this time interest rates on deposits were raised, and commercial banks were requested to raise their lending rates to a minimum of 15 percent per year on advances for trading purposes. However, production credit remained at 6 percent and marketing credit was only raised marginally from 6 percent to 8 percent. In December 1981, the authorities started to prescribe global credit ceilings on the advances of each of the commercial banks. These credit ceilings were not tied to the deposit base of the individual banks, but were instead based on each bank's willingness to lend, as reflected in the level of loans outstanding at the time, thereby proving to be an inadequate tool for control of liquidity. The ceilings were adjusted for seasonality. This was particularly true for the GCDB which made the bulk of the crop finance advances against re-finance facilities from the CGB.

Concomitant with the introduction of these measures to reduce the liquidity of banks was the pronouncement by the CBG in December 1981 that the local currency counterpart of funds awaiting the availability of foreign exchange to pay for imports could no longer be included in the Liquid Assets category of the banks. Banks were asked to place all such funds in a special deposit account at the CBG to await foreign exchange availability. With all of its customers' deposits having been lent out, the GCDB had to resort to CBG borrowings to meet this new requirement. This is yet another illustration of deficient liquidity management in the bank.

By the end of 1983, the financial position of the GCDB had deteriorated seriously. In order to determine the extent of the Bank's malaise, a portfolio review was undertaken towards the end of fiscal year 1984. The portfolio review resulted in a provision of D15.73 million for bad and doubtful debts for the year, an amount which exceeded the cumulative provisions for the preceding 10 years (see Table I-50, column 2, line 8). Long outstanding balances in the Bank's reconciliation accounts were also written off. The Bank ended up with a loss of D18.30 million, after tax (column 2, line 14), and this eroded completely both the amount in the Bank's share capital account and in its Reserve account. The shareholders' funds account was therefore in deficit by D15.16 million, and needed an additional capital infusion of D17.16 million (i.e., the deficit plus 5 percent of deposit liabilities) to operate within the minimum capital adequacy requirements under the FIA. In the end, no additional capital was forthcoming. Instead, the Government retired the long outstanding debt owed by the Gambia Cooperative Union (GCU) to the GCDB under a separate arrangement between the two parties (and the World Bank). The amount of D25 million which was involved in this transaction related to amounts owed to the GCU by member-farmers who had been forgiven their debts by Presidential decree.

The GCDB was also in violation of the liquid assets provisions in the FIA, although this was largely because of large credit balances which it held with overseas banks. The Bank was seriously exposed, particularly on balances held in currencies which had appreciated against the dalasi. Exchange losses of D5.0 million were recorded between the period 1981 to 1984.

At the end of fiscal year 1985, the financial position of the Bank had deteriorated further; the liquid assets of the Bank stood at D11.47 million (see Table I-51, column 3, line 1) against a minimum requirement of D17.04 million. Customers continued to default on loan obligations, while loan recovery on bad debtor accounts was slow as a large number of cases were either in court or with the Bank's solicitors. Recovery was made even more difficult, as a large number of loans were grossly under-collateralized. The continued exposure in its foreign exchange transactions resulted in further losses of D4.60 million. Coupled with the additional provisions of D12.86 million for bad and doubtful debts, the Bank ended up with losses of D16.30 million for the year (Table I-50 for year 1985, column 3, line 12).

Accumulated losses to-date were D37.16 million (Table I-50, column 7, last line), against reserves of D2.78 million and a capital of D5.00 million. A series of emergency financial measures were taken during the year, including an increase in the capital base (from D2.0 million to D5.0 million) and D35.0 million of the amounts owed to CBG was converted into a 15 year, interest free loan, subordinated to depositor's claims which assumed the characteristics of quasi equity.

3. The Post ERP Years

During the fiscal year 1986, the authorities introduced several measures which were aimed at restructuring the financial system under the ERP. In September, the CBG raised its lending rates on all advances (including existing loans) by 7 percent (from 8 percent to 15 percent). Reserve requirements were raised from 4 to 6 percent for term deposits, and from 8 to 15 percent for demand deposits. Also, in January 1986, a flexible exchange rate system was introduced.

The increase in interest rates introduced by the CBG measures nullified the potential savings in interest charges on the D35.0 million in development loans (discussed above), while the rise in interest payable on customers' deposits were barely matched by the interest earnings on the advances made by the GCDB, given the overall poor quality of its portfolio.[4] Furthermore, losses in foreign exchange transactions amounted to D6.55 million (D1.81 million on revaluation and D5.74 million written off from correspondent bank reconciliation). The net result was a loss of D11.38 million for the year, thus bringing the accumulated losses to D48.94 million (after tax) for 1986 (see Table I-50). Measures taken during the year to "improve" the Bank's financial position included an increase in share capital (via conversion of the IDA loan of D6.03 million) and an increase of D10.43 million in the Bank's reserve account following a revaluation of the Bank's premises. None of these measures involved any infusion of cash and, even at that, the shareholders' fund remained in deficit by an amount of D23.65 million.

With the introduction of the flexible interest rate mechanism, interest rates rose further in 1987. Although the Bank registered a small after tax profit of D0.28 million, its overall financial position remained precarious, despite the fact that The Gambia Government Managed Fund Account was created. Liquid assets were D15.78 million against a required minimum of D31.81 million, and although additional capital of D2.53 million was raised, the balance in the shareholders' account remained in deficit by D20.83 million.

---

[4] In 1986, development loans which were extended at concessionary rates totalled D45.60 million gross (Table I-51, column 4, line 22), against the Development Fund account balance of D10.21 million.

Under the Managed Fund arrangement, the government agreed to take over all guaranteed loans and related charges which the Bank, at the request of the government, had borrowed from the CBG for on-lending to various enterprises which were subsequently unable to service these loans. The government agreed to pay to the CGB the borrowings still outstanding and owed to the CBG by the GCDB. Following the finalization of these transfers, the GCDB was for the first time in a long while able to satisfy its liquid assets position and stabilize its net current assets position without much loss in earnings since treasury bills were available at attractive rates of interest. Instead, GCDB management lent out a substantial proportion of the D16.0 million cash surplus which had resulted from the transactions under the Managed Fund transfers. Instead of acting prudently (by placing this surplus in T-bills to meet its statutory liquid asset requirements), the GCDB management lost an opportunity to secure some semblance of institutional viability. Instead, it engaged in another round of lending that ended up largely in default. In short, they should not have made the loans in the first place. Secondly, once made they turned bad, thereby compromising the solvency of the institution.

4. The Final Years and The Meridien Bank Solution

By 1990, new lendings in the Development Fund had been suspended. CBG refinance facilities were no longer utilized for on-lending and new loans in the commercial portfolio were extended on a restrictive basis. During the year the government retired D48 million of GCU's borrowings with the GCDB (leaving a balance of only D2.7 million unpaid). After repaying some of its borrowings from the CBG, the GCDB invested the surplus funds in treasury bills. All these transactions enabled the bank to raise its liquid assets ratio to within the minimum required under the FIA.

Although the Bank's shareholders' fund was no longer in deficit, and the balance in the account was sufficient to meet the statutory capital ratio of D6.96 million, the change in the position of this account was brought about largely by a revaluation of the Bank's premises which yielded a surplus of D28.34 million. Shareholders subscribed an additional amount of D9.60 to the share capital, but only D5.00 was made available to the GCDB in cash, the balance of D4.60 having been utilized to reduce the balance in the non-interest bearing loan of D35.00 million with the CBG. Further provisions of D27.26 million were made for bad and doubtful debts (Table I-50, column 7, line 8). In preparation for the privatization of the Bank, its status was changed from that of an unlimited liability corporation to a limited liability company.

By the end of the fiscal year, a firm decision had been taken to sell the Bank, with a provision that the majority shareholders must be a foreign bank. Originally, it was stipulated that the Bank would be sold without any sanitization of its balance sheet and it was on this basis that potential buyers had examined the books of the bank. Meanwhile, the loan and advances portfolio was reviewed yet again, and further provisions of D104

million were made for bad and doubtful debts (interest on non performing debts had been computed at current rates and the amounts were credited to the profit & loss account, see Table I-50 for 1991). The bank ended up with losses of D85.18 million for the year and the shareholder's funds account was again in deficit by D76.28 million at the end of the fiscal year 1991.

The Meridien International Bank, already granted approval to operate as a bank in The Gambia, was invited by the government to consider taking over the GCDB, instead of starting a new bank. By the end of December 1991, and after an evaluation of the bids for the Bank, Meridien's offer was determined the best. Negotiations on the side of the GCDB commenced thereafter. The Draft accounts for the seven months to January 1992 showed that the net asset position of the Bank was in deficit by D69.87 million and that the shareholders' funds account was also in deficit by D79.24 million. An agreement was reached to "clean up" the balance sheet of the Bank for the purposes of selling it to Meridien.

Details of the sales have yet to be made public, but discussions with government officials and other informed sources reveal that initially the government had committed itself to providing a total amount of D51.0 million to "clean up" the balance sheet of the Bank in order to prepare it for privatization. We do not know the basis on which this figure was arrived at, but we find the amount to be inadequate for the stipulated purposes, unless all of the Bank's liabilities to the CBG are treated "below the line."

Regarding the sale to Meridien, it is understood that at the top of the government's agenda was the need to protect depositors' funds. On the strength of that, and Meridien's desire to take over only the Buckle Street (Banjul), Bakau and Farafenni branches, Meridien agreed to take over all of the deposits at these three branches. On the asset side, the government agreed to transfer all of the GCDB's cash deposits as of 1/31/92 to Meridien, and Meridien agreed to take over up to D25 million of loans and overdrafts from the GCDB. The shortfall in total assets vis-a-vis total liabilities would be met by the government, through a gift of treasury bills and bonds. Meridien agreed to purchase the premises at Bakau and Farafenni and only to rent the Buckle Street building for an annual rental fee. Furthermore, Meridien undertook to sell up to 40 percent of its shares to private investors in The Gambia at a later date.

The financial transactions outlined above are summarized below While the figures are only indicative, they are likely very close to the actual figures involved in the sale.

ASSETS (in millions of Dalasis)		LIABILITIES (in millions of Dalasis)	
D 30.00	- Cash & Deposits	D 130.00	- Customers Deposits
25.00	- Loans & Advances	7.70	- Share Capital
1.10	- Fixed Assets		
D 56.10			
81.60	- Treasury Bills & Bonds required to balance the Balance Sheet		
D 137.70	- Total	D 137.70	- Total

Of the total deposits of D132.005 million for the GCDB as of 1/31/92, only D130.00 million had been assumed to be held in the three branches. Meridien agreed to subscribe to a minimum of D7.70 million in share capital, D1,10 million of which will be paid to the government for the Bakau and Farafenni branches, and D6.60 million will represent the minimum amount required under the FIA to support the level of customers' deposits. The cost to Meridien of the additional assets (such as computers) have not been included. These items will, however, not affect the amount to be transferred by the government to Meridien in the form of Treasury Bills. The Pro-forma cash & deposits account includes D20.00 million for the three branches (as of 1/31/92), plus D6.60 million of the total paid up capital. The remainder of the assets and liabilities of the GCDB as of 6/29/92 will be transferred to the Asset Management and Recovery Corporation (AMRC). We estimate that a minimum amount of D80.00 million will be required to balance the Balance Sheet under the terms of the sale agreement. Any increase in the level of customers' deposits which are not matched by a rise in the Bank's Cash and Deposit account will render the amount of D80.00 million insufficient at the time of the final transfer (i.e. June 29th, 1992).

Finally, it is of interest to note that the Meridien Bank has currently assumed responsibility for a maximum of 25 million dalasis of the GCDB commercial loan portfolio to include in its own assets. On-going negotiations could very likely reduce this amount. This represents 46 percent of the outstanding commercial loan portfolio of the GCDB in 1992, even after one has subtracted out the rather ample and realistic provision for bad debt that had been culled out of the portfolio after three independent external auditing firms completed their evaluations (see Table I-51, column 9, line 5). In short, Meridien was uninterested in roughly 54 percent of the net loans outstanding of the commercial portfolio. While there may have been some risky loans still left in the GCDB commercial portfolio, it is surprising that some additional portion of the 54 percent of the sanitized portfolio could not have been incorporated into Meridien's assets, thereby reducing the cost of using T-bills to balance the liabilities in Meridien's balance sheet. Currently, it would appear that loans only represent 18 percent of Meridien's assets and T-bills 59 percent. It is to be hoped that Meridien will shortly expand the share of loans in its asset portfolio competitively contributing to an expansion of the loan market in The Gambia, otherwise it will largely remain a repository of government securities.

5. The Development Bank Syndrome

The GCDB experience illustrates many symptoms of the terminal illness that is frequently associated with development banks. First and foremost, among these symptoms is the ease with which a donor virus can spread through an institution's management and clientele when large transfers of government or donor funds are used for on-lending. The entitlement psychology generally runs rampant in a donor or government funded institution. Governmental guidelines in the allocation of loans is common with the usual default consequences.

Related to this entitlement psychology is the absence of well defined property rights and an underdeveloped legal system. Clearly, an inefficient and unresponsive judiciary lies behind some of the GCDBs inability to secure quick and responsible legal action against defaulted borrowers. Moreover, the larger the loan, the longer the delay and the greater the likelihood of indefinite or no action at all.

Third, the GCDB manifested little skill or talent in establishing an effective management information system. A striking weakness here has been the inability to track the repayment status of long term loans until it was too late. There has never been any risk management dimension to the GCDBs portfolio management, through loan tracking programs. Moreover, basic documentation of the terms and conditions of loan contracts and the registry of collateral have frequently been deficient. This has weakened the bank's legal cases against important defaulters. In short, the bank assumed the responsibility of a portfolio far larger in size and complexity than they had the talent to manage properly. In fairness to the banks management, they were frequently directed or influenced by the government to issue loans to a high risk clientele that they might not have chosen if they had enjoyed a more autonomous management status. However, it is precisely this lack of autonomy that compromises these institutions and weakens the discipline of accountability and rigorous loan tracking programs.

Fourth, term lending institutions rarely issue long term loan contracts that are designed to adjust interest rates to inflation. This failure penalized the GCDB in its early years of operation, contributing to a rapid depreciation of its loan portfolio (and generating an implicit subsidy for borrowers). At the same time, term loans were frequently issued to first-time borrowers before they established a responsible repayment record through short term borrowing. In many cases, term loans were granted to customers without sufficiently secure collateral or up-front equity commitment. Weakly collateralized lending for large long term loans is reckless in the extreme and introduces moral hazard into the institution.

In the end, a remarkably high default record resulted from this unfortunate experiment in development banking in The Gambia. Moreover, the Agricultural Development Bank (ADB), not discussed here, failed for similar reasons in the late 1980s. This has constituted a burdensome legacy for Gambian society and Gambian taxpayers.

First, the individual borrowers who defaulted on their large loans are comprised, in part, of a high income segment of Gambian society. Thus, the defaults in effect transferred an inordinate amount of both domestic and donor resources to a limited number of borrowers, thereby contributing to a regressive transfer of income. Secondly, the roughly 80 million dalasis in T-bills generated to transfer to the Meridien Bank (to clean up the GCDB balance sheet) will burden future taxpayers who have to service this increased debt.

One can gain an insight into the degree of regressivity implicit in the GCDB defaulted loan portfolio by first distinguishing between the defaulted loans to the Gambian Cooperative Union (GCU) farmers and other "social" transfers and the rest of the portfolio in the Managed Fund Account. Next, one can look at the distributional profile of the private individual loan accounts in default in the GCDB portfolio currently placed in the Asset Management and Recovery Corporation (AMRC) recently created by a Parliamentary bill in December 1992.

As pointed out earlier, the Managed Fund Account was created in 1987 through which the government agreed to pay the Central Bank all of the unpaid amounts on defaulted guaranteed loans the GCDB had issued to a risk-prone clientele at the request of the government. Discussions with Gambian authorities indicated that as of February 1992, there were 84 million dalasis outstanding in these defaulted accounts. Of this total, 31 million represent unrepaid loans to farmers serviced through the GCU, 3 million is associated with loans to municipal bodies, 10 million to cover the marketing losses incurred by the GCU in its groundnut operations, and finally, 40 million is associated with defaulted loan account of private individuals. Therefore, loans issued to low income farmers (i.e., 31 million) represent roughly 37 percent of the bad debt total in the Managed Account, loans covering the costs or losses of government or quasi-government operations (i.e., the municipal loans and those covering the GCU marketing operations) account for approximately 15 percent of the total, and the remaining defaulted loans to private individual borrowers roughly 48 percent of the total Managed Fund Account. In brief, only 37 percent of the Managed Fund Account loaned to GCU borrowers can unambiguously be associated with a low income social priority.

In short, approximately 48 percent of the Managed Fund Account (i.e., 40 million dalasis) is associated with individual commercial borrowers. Although these clients received government guaranteed loans at below market rates, most of these borrowers were commercial clients operating in such areas as tourism, hotels, manufacturing and other established businesses benefiting through government promotion of their activities. In no way could the default status of these clients be defended on equity or welfare criteria.

Turning our attention to the current Asset Management and Recovery Corporation (AMRC), one gains additional insights into the degree of regressivity in the defaulted portfolio. This unit was set up to inherit and recover the outstanding loan accounts in the GCDB portfolio, following the merger of the GCDB operations by the Meridien Bank.

Discussion with Gambian authorities indicated the following distributional profile for the 2,911 loan accounts placed in this unit:

Number of Loans	Loan Size Intervals (in Dalasis)	Total Debt Outstanding	Average Loan Size
(1)	(2)	(3)	(4)
211	Above D 100,000	D 181,853,932	D 861,867
201	D 50,000 to D 100,000	13,461,594	66,973
2,499	Below D 50,000	30,299,149	12,125
Total 2,911		D 225,614,675	D 77, 504

First, it should be noted that these loan accounts are associated with individual loans to private borrowers. Second, it is important to distinguish between "current" and "defaulted" loans in this recovery unit. The most recent balance sheet for the GCDB for 1992 (Table I-51, column 9) indicates that 54 million dalasis were outstanding as "current" loans in the commercial loan portfolio immediately prior to the creation of the Asset Management and Recovery Corporation (AMRC). If we subtract this from the total loans outstanding in the recovery unit (column 3 above) we arrive at 171 million dalasis of loans in a defaulted loan status or 76 percent of the total loan balance in the AMRC. This total outstanding individual debt in "default" is quantitatively significant, representing the equivalent of 60 percent of the total outstanding loan balances recorded for the banking industry in 1991 (Table I-38, column 6). Finally, the average loan sizes registered above are sizeable, particularly for the top-most category where 211 individual borrowers received loans above 100,000 dalasis each and, in the aggregate, amounting to approximately 182 million dalasis. This creates an average loan size for this category of roughly 862,000 dalasis. This compares to an income per capita figure that ranges between 2100 and 2400 dalasis per person in 1991. There is a two stage distributional process inherent to this GCDB loan profile outlined above. First, there is a relatively small number of individual borrowers that initially received unusually large sized loans. Second, these loan amounts ended up in default, further reinforcing the distributional consequences. It is hard not the come to the conclusion that both the intial loan rationing and the resultant defaulted loans in the GCDB portfolio contributed to a substantial regressive distribution of income in The Gambia.

XII. SUMMARY

To conclude this chapter on formal finance in The Gambia, it is instructive to review our finding in five major areas: (1) the predominant changes in the pattern of financial balances in the past decade; (2) the social costs of institutional failures growing out of an unstable market structure for banking in The Gambia; (3) the impact of the stabilization and privatization drives on financial deepening and financial intermediation; (4) the issue of savings mobilization in Gambian financial markets, and; (5) the collapse of rural finance

within the Gambian financial sector and the implications of this urban bias for future donor development policy.

1. Decadal Patterns of Change

First, it is revealing to summarize the major patterns of change in formal financial markets during the decade. The overall financial market shrank dramatically over this period. This was largely due to the rapid decline of lending activity in the country's largest bank, the GCDB. The remaining private commercial banks experienced roughly a one-third decline in their outstanding balances in real terms over this period.

Another feature of importance was the shift from public to private sector banking and from long to much shorter term lending. In the early 1980s, a supply leading financial development strategy predominated in policy circles and created a preponderance of public sector credit flows in the formal financial markets of that time. By the early 1990s, public sector credit activity through the GCDB and its downstream network had largely disappeared, and private commercial bank lending emerged as the only viable financial intermediaries functioning in the country.

Another important change is evident through the collapse of agricultural lending from its predominant role of 30 to 35 percent of total lending in the early 1980s to 7 to 8 percent by the early 1990s. In contrast, loans for trading enterprises rose from around 20 to 30 percent of total outstanding balances within the smaller scale financial market of the early 1990s. The decline of agricultural lending was directly associated with the decline of the GCDB and the failure of the supply leading financial development strategy.

Another element of change in the past decade was the rapid emergence of large interest rate margins in Gambian financial markets and the high rates of return on assets and equity by financial institutions in these markets from the late 1980s onwards. With the liberalization of financial markets freeing up interest rates, a wide margin emerged between average loan and deposit rates creating by 1991 one of the widest gross interest rate margins in Africa (19 points). Among other things, this increased the profitability of banking and played an obvious role in attracting a number of international banks to apply for bank charters to enter the Gambian market. At the same time, the growth of these wide margins created a high loan rate milieu that some allege discourage investment lending.

A final feature that stands out in this decadal pattern of change is the periodization that characterizes the past decade. This, of course, has been reported on at length by many authors, however, rarely in reference to financial markets. The first half of the 1980s registered continuing high levels of outstanding balances of financial activity, a predominance of public sector credit activity, agricultural lending and negative real rates of interest for both loans and deposits. In effect, this failure to adjust interest rates for

inflation promoted a transfer of income from savers to borrowers during this period, worsening the distribution of income in the country. Indeed, the negative real rates for savers predominated throughout much of the decade. The final half of the decade saw a dramatic downscaling in the size and nature of Gambian financial markets (outlined above) as the financial excesses of the first half of the decade were removed through the discipline of the Economic Recovery Program (ERP) and ensuing structural adjustment programs. Borrowers were eventually charged increasingly higher positive real rates of interest from the late 1980s onwards, savers only achieved reasonable positive rates in 1989 and 1991.

2. Market Structure and Institutional Failure

The chronic instability of the market structure for banking stands out as the second major issue of Gambian financial markets. Institutional weaknesses were apparent in several private and both public sector banks. In The Gambia in the past ten years, four banks have closed operations and a fifth is under litigation. Only two banks have passed through the past 10 years free of financial problems. Clearly, the bank charter review process of the Central Bank and the supervisory functions should be strengthened to reduce this market instability. Central Bank authorities are currently strengthening these functions and playing a positive role in helping to design a revised Financial Institutions Act that creates a more appropriately designed institutional framework for bank regulation.

The institutional failure of the Agricultural Development Bank (ADB) and the Gambia Commercial and Development Bank (GCDB) have proven costly to Gambian society in two ways. First, the large default burden and write-offs during this decade have been substantial. It is difficult not to conclude that this transfer contributed to a regressive transfer of income in the country. Second, to clean up the books of the GCDB, the Gambian government has been forced to issue roughly 80 million dalasis of treasury bills to induce an international bank to take over the deposit obligations of the GCDB in 1992. This action introduces a future burden for Gambian taxpayers through the servicing of this debt.

When the income distribution implication of these transfers are added to the pervasive negative real rate of interest environment for savers in The Gambia until the early 1990s, one has to conclude that the formal financial markets on balance have generated in the past decade a relatively more regressive distribution of income in the country. Ironically, both these processes of development bank finance and subsidized interest rates were designed to promote development and help the poor through these interventions in financial markets. The financial landscape has now been cleared of these experiments but with a legacy on the treasury and on the profile of income distribution in Gambian society.

3. The Impact of Structural Adjustment Measures

The impact of the Economic Recovery Program (and ensuing structural reforms) on financial markets has been dramatic and constitutes another important issue in financial market development. Interest rate reforms freed up interest rates to high levels contributing to the reduced demand for loans. Institutional reforms to reduce subsidies and the fiscal deficit reduced lending to perennially heavy borrowers like the GPMB and the GCU further scaling back the loan market. Both these reforms were legitimate and long overdue and in the process reduced the loan market to a size more commensurate with a solvent clientele.

The laudable stabilization measures to control the inflationary impact of donor inflows of foreign grants and loans, however, has created a crowding out effect in the asset portfolio of banks. The attractive interest rates negotiated to induce banks to purchase risk free T-bills has reduced their interest in pursuing a riskier loan market. Loans account for only 25 percent while T-bills represent around 42 percent of total assets for the private commercial banks operating in The Gambia in the early 1990s. Thus, financial liberalization and economic stabilization has not promoted financial deepening and crowding out has reduced the scale of financial intermediation through the loan market.

These data might suggest that the structural adjustment measures were detrimental to financial development, but this is misleading. The size of the loan market was exaggerated in the early eighties. Much of the volume of outstanding balances at that time was a non-performing portfolio that later generated defaults in the largest bank in the market. In short, the financial market of the late 1980s and early 1990s more accurately reflects the true size of a solvent loan market for The Gambia. Still, the crowding out effect discussed above is a real concern. It represents a continuing process reducing the scale of the private sector loan market in The Gambia. This process could be ameliorated by drawing more on fiscal rather than monetary policy (i.e., the T-bill market) to contain inflation and introducing more competition in the T-bill market.

4. Savings Mobilization

Another issue of financial development during much of this period was the weak incentives for savings mobilization. To the extent that loan markets remain limited, there will be little incentive for banks to encourage savings mobilization. Savers have been penalized with zero or negative real rates of interest for a majority of the past 11 years. Savers in rural areas have been excluded from formal financial services altogether. In short, there is currently a greater potential for savings mobilization than for loans. The present underdeveloped state of formal financial markets in The Gambia will continue to penalize savings mobilization until markets expand for loan services.

5. Urban Bias and the Emergence of NGOs

The final issue associated with the evolution of Gambian financial markets has been the extreme urban bias that has emerged in these markets by the early 1990s. Several factors have reinforced this process. Agricultural lending has declined precipitously; the GCDB, the major rural bank has disappeared as an active lender; the agricultural linkages to the banking sector have been substantially reduced through the demise of the GCDB and the reorganization of the Gambian Cooperative Union. Finally, the natural heirs to the financial system, the private commercial banks, have no extensive branch network in rural areas to service rural depositor-savers, nor any direct agricultural loan portfolio.

In the end, the rationalization and reform of the Gambian economy from the mid-1980s onwards was an essential step in the recovery of economic growth as Gambian authorities succeeded in stabilizing inflation and liberalizing markets to secure a more stable path of development. The price policy reforms that grew out of these policy initiatives have proven successful in generating a more efficient and equitable pattern of growth. However, not surprisingly, institutional reforms have proven to be a far more difficult task. Restructuring the banking system and liberalizing financial markets have produced a much smaller, leaner, and more resilient financial sector wholly dominated by private commercial banks. While this was in many ways a necessary and inevitable result for sound banking in The Gambia, this change does very little to service development in rural Gambia. Formal financial markets are still greatly underdeveloped, offering at best only limited financial services to an unusually small portion of the population from which rural areas are almost completely excluded. Private commercial banks located in Banjul cannot be expected to supply rural Gambians with financial services except as a wholesaler working through other agents such as commodity traders.

The challenge facing Gambian authorities now is to expand and broaden financial intermediation beyond the mere transfer of the public's deposits into government securities. More attention must be given to promote the institutional innovations and strengthen the supervision and regulatory functions necessary to broaden the market for the supply of financial services. In this regard, non-governmental organizations (NGOs) are a possible option. NGOs have begun to fill the vacuum created by the disappearance of formal financial linkages to rural Gambian markets. The degree to which NGOs can satisfactorily fill this vacuum and supply viable, self sustaining services is an open question. We explore these questions in greater detail in the following chapters.

Bibliography

Adekunde, J.O., "The Demand for Money: Evidence from Developed and Less Developed Economies," *IMF Staff Papers*, Vol. XV, No. 2, July 1968.

Ahmed, Zejly, "Demande de Monnaie: le Cas du Maroc," *Savings and Development*, VIII, No. 1, 1984, pp. 15-40.

Balino, T.S.T., "The Demand for Money and its Components in Argentina: Annual Estimations, 1935-69," in *Money and Monetary Policy in Less Developed Countries*, Coates and Khatkhale (eds.), Pergamon Press, Oxford, England, 1980, pp. 279-298.

Central Bank of The Gambia, *Bulletins*, 1985-1991, and *Annual Reports*, 1989/90.

Duesenberry, James S., and Malcolm McPherson, "Monetary Management in Sub-Saharan Africa: A Comparative Analysis," Development Discussion Paper No. 395, EPS, Harvard Institute for International Development, 1991.

Fry, Maxwell, *Money, Interest and Banking in Economic Development*, The John Hopkins University Press, Baltimore, 1988.

Gregory, Allen W., "Testing Interest Rate Parity and Rational Expectation for Canada and the United States," *Canadian Journal of Economics*, Vol. XX, No. 2, May 1987, pp. 289-305.

IMF, *International Financial Statistics*, various bulletins.

Kaufman, George and Cynthia Latta, "The Demand for Money: Preliminary Evidence from Industrial Countries", *Journal of Financial and Quantitative Analysis*, September 1966, pp.75-90.

McPherson, Malcolm, and Steven C. Radelet, " Economic Reform in The Gambia: Policies, Politics, Foreign Aid, and Luc," in *Reforming Economic Systems in Developing Countries*, Dwight Perkins and Michael Reumer (eds.), Harvard University Press, 1991.

Mishkin, Fredric, *The Economics of Money, Banking and Financial Markets*, 3rd ed., Scott, Foresman and Co., Glenview, Illinois, 1992.

Nathan Associates, Robert R., Diagnostic Study of the Gambia Commercial and Development Bank, report submitted to the Ministry of Finance and Trade Government of the Gambia, Robert R. Nathan Associates in association with Citibank N.A., 1988.

Sarr, Babou, "The Impact of Supply Leading Finance on Public Financial Institutions: The Case of the Gambian Commercial and Development Bank," Master Thesis, The Ohio State University, 1989.

Stein, Jerome, et.al, "A Theoretical Explanation of the Empirical Studies of Futures Markets in Foreign Exchange and Financial Instruments," *The Financial Review*, Vol. 18, No. 1, February 1983, pp. 1-32.

Thornton, Daniel L, "Tests of Covered Interest Rate Parity," *St. Louis Federal Reserve Bank Review*, July/August 1989, pp. 55-66.

Von Hagen, Jurgen, "Monetary Targeting with Exchange Rate Constraints: The Bundesbank in the 1990s," *Review of the St. Louis Federal Reserve Bank*, Vol. 71, No. 5, Sept/Oct. 1989, pp. 53-69.

Walsh, Brendan, "Interest Rates and Economic Development in The Gambia" Unpublished Manuscript, Statistics and Special Studies Unit, Ministry of Finance and Economic Affairs, The Gambia, April 1991.

World Bank, *World Development Report*, 1992.

Appendix I-1
The Demand for Money

In this appendix, we investigate monetary issues further through estimation of demand for money equations in The Gambia. This was done to investigate the issue of what determines the demand for money and to examine the stability of the demand for money function. Our purpose in doing so was to determine if the quantity theory of money is valid in The Gambia (i.e. whether nominal income is determined by the stock of money).

The theoretical approach in this analysis is based upon the neo-Fisherian-Friedman hypothesis, according to which the demand for money is a function of the level of economic activity and the opportunity cost of holding money (Balino 1980; Ahmed 1984; and Adekunde 1968). We postulate that the demand for real money balances is given by the function:

$$M(t) = a + b*Y(t) + c*DP(t) + d*M(t-1)$$

where M represents nominal money balances deflated by the implicit GDP deflator; Y is real GDP (our measure of economic activity); DP is the rate of inflation as measured by changes in the GDP deflator (our measure of the opportunity of the cost of holding money). The above equation is the standard demand for money equation found in the literature and has been estimated for numerous developed and less developed countries (Adekunde 1968; Balino 1980; Ahmed 1984).

The above equation is estimated using ordinary least squares over the period 1967-1991 with the variables M and Y transformed into natural logarithms. The money variable employed in all regressions is M2. The results are reported in Appendix Table I-1. All of the estimated parameters are significantly different from zero at standard levels of significance. The Box-Pierce Q-statistic is utilized to test for autocorrelation. This was used since the equations contain a lagged dependent variable. The marginal significance levels of the Q statistics indicate that no autocorrelation of the residuals is present. The equation was run with and without DP (the GDP deflator) to assess the impact of this variable.

The estimates of the individual parameters indicate the following: First, the estimated coefficient for real GDP is less than one (row 3, Appendix Table I-1). However, a t-test on this parameter failed to reject the hypothesis that it was significantly different from one, thus, implying that a 1 percent increase in real GDP would result in a 1 percent increase in real money balances. The coefficient of the rate of inflation (DP) has the expected negative sign. The elasticity of money balances with respect to inflation (row 9a) is found to be -0.041 indicating that real money balances are not very sensitive to changes in the opportunity cost of holding money. This is consistent with findings of most other studies on the demand for money cited earlier which report a similar result.

The coefficient on lagged money balances (row 2) is positive, less than one and highly significant. This indicates that individuals do not fully adjust their money holdings within a one year period, but such adjustment follows a smooth path. This further indicates that long run elasticities differ from short run elasticities. Long run elasticities are presented in row 7. The long run elasticities are found by dividing the short run elasticities by 1-d, where d is the estimated coefficient on lagged money balances. The income elasticity in the long run is approximately 2, a fairly high response. This highly elastic response of the demand for money to real income seems to confirm the hypothesis, put forward by Kaufman, according to which the income elasticity is inversely related to the state of money markets. The rationale for the Kaufman hypothesis is well established in economic theory. The development stage of financial markets may be judged by the availability and quality of money substitutes: the more advanced are money markets, the greater are the number, variety and liquidity of money substitutes. Thus, slower movements in money may be expected in response to a given percentage increase in income in countries with advanced money markets and the ready availability of a large variety of high-quality interest yielding money substitutes, like the United States. A quicker, more elastic response would be expected in less financially developed countries like The Gambia because there are no options other than money and one or two money substitutes.

Statistical examination of the issue of stability of the demand for money was not possible due to the limited size of the sample. Some insights were obtained by estimation of this equation over the period 1967-1986. This was done to see if differences emerged with respect to the introduction of the structural adjustment and liberalization policies after 1985. The results of the estimation, presented in columns 3 and 4 are not different from those over the period 1967-1991 and conform to the results reported over the period 1967-1991. This suggests that the demand for money in The Gambia is stable.

Given the openness of the Gambian economy, we also estimated the equation with the dalasi-British pound exchange rate and the 3 month UK T-bill rate as independent variables. Neither of these variables were significant, nor did their inclusion alter the findings already reported. Hence, the demand for real money balances is determined by real income and the opportunity cost of holding money. This supports the view that monetary policy (changes in the money supply) is important, and can affect economic growth in The Gambia.

Appendix Table I-1 Estimates of the Demand for Money in The Gambia.

	1967-1991	1967-1991	1967-1986	1967-1986
	(1)	(2)	(3)	(4)
1. Constant	-2.98	-2.27	-3.84	-2.83
	(-2.88)	(-2.15)	(-3.02)	(-2.09)
2. ln M(t-1)	0.51	0.66	0.45	0.63
	(3.78)	(4.37)	(3.00)	(3.48)
3. ln Y(t)	0.85	0.64	1.05	0.76
	(3.22)	(2.31)	(3.32)	(2.18)
4. Inflation		-0.46		-0.49
		(-1.86)		(-1.62)
5. R2	0.97	0.97	0.97	0.97
6. Q-stat	11.94	10.59	8.89	6.45
	(.45)	(.56)	(.54)	(.77)
7. Long run income elasticity	1.73	1.88	1.91	2.05
8. T-stat for b=1	-0.53	-1.29	0.15	-0.68
9. Inflation elasticity:				
(a) short run		-0.041		-0.044
(b) long run		-0.12		-0.12

Note: Number in parentheses is the t-statistic for estimated coefficients and the marginal significance level for the Q-statistics.

Appendix I-2
Notes on Alternative Forms of Term Finance in The Gambia

1. Development Bank Finance Revisited

The record for long term finance in The Gambia has not been promising. The collapse of the Gambia Commercial and Development Bank in the summer of 1992 does not bode well for the capacity of Gambian public sector institutions to manage the risks and the complexities of term finance contracts. These risks and operational complexities were outlined at the end of our earlier discussion of the GCDB at the end of Chapter One. Private banking institutions, on the other hand, largely avoid these risks and complexities as they focus on more secure shorter term loans and emphasize the purchase of T-bills and foreign exchange operations. The issue that surfaces at this point is whether there are viable long term investment opportunities in The Gambia that could be successfully financed by some term finance facility.

One question that surfaces at this point is whether there are any viable long term investment opportunities in The Gambia. The short answer to this question is yes, and a good number are being financed by retained earnings, the most common form of finance used for long term investment in developing countries. One should not be misled into thinking that term investments are not occurring just because they don't stand out in bank portfolios. The next question that arises is whether term finance is possible from third parties rather than from the owner-investor. It is here that imperfect information emerges as a major bottleneck along with the risk already inherent to the investment project. The longer the term the greater the risk that strategic variables can change in unpredictable ways to affect profits and project viability. Moreover, an outside third party financier faces the additional risk of having less information than the investor (this is the asymmetric information problem), about the project's viability and the investors capability, motives, and character. Furthermore, if the outside source of finance is a bank, it has the additional fiduciary responsibility of protecting their depositor/savers by not incurring undue risk in the allocation of their funds. Finally, a sound bank cannot engage in reckless term transformation (i.e. granting long term loans on the basis of short term deposit liabilities).

This latter point deserves further comment. Private commercial banks in The Gambia face an average weighted deposit term (including both demand and time deposits) between two to four months. Hence, they cannot have a weighted term length of assets much beyond four to six months (assuming some degree of term transformation). This prudent balance or matching of asset and liability term structures protects the bank from a potential liquidity shortfall but it also reduces the potential for long term loans. Development banks, of course, can remove this short term liability constraint by drawing on long term donor or government funds, thereby creating long term liabilities. This in turn can

lead to long term loans, however, at the cost of transmitting an incompatible incentive to borrowers that they can gamble on risky loan projects or that they do not have to be overly concerned about meeting their loan obligations. Thus, the creation of a public sector long term liability term structure can introduce moral hazard into the asset portfolio jeopardizing the solvency of the institution.

2. Conglomerate Banking

Another approach to the issue of the scarcity of term finance is to allow banks to create new-ventures or move into a commanding position in an existing business through term finance arrangements that in effect buys equity control of the business. This is sometimes referred to as the German banking model. This removes the information problem as the bank places key officials on the board of directors and, in some cases, in top management itself. However, this requires that banks do more than banking. They must be expert professionals of non banking businesses and be prepared to risk the public's deposits for these business ventures. Germany (and later Japan) gradually moved into this form of "conglomerate" banking that included networks of business enterprises associated with key banks. British banking avoided this approach since there was not the same felt need for outside capital to finance industry during the industrial revolution. Americans distrusted this banking style from the very beginning, arguing against the concentration of economic power that this style would create compromising competition, and democracy. American analysts always point out that these historical examples of conglomerate banking emerged in non-democratic states.

Still this form of banking has emerged in some developing countries where the concentration of wealth naturally creates strong group interests and conglomerate banking to serve those interests. Chile, up to the 1982 financial crash, had several large group banking networks that, in the end, brought down the entire banking industry (McKinnon). The problem that emerged is the classic issue in group banking. To what extent can a bank, drawing upon deposits from the public at large, refuse a loan to a failing business within its own group? On the one hand, the bank has a fiduciary responsibility to its depositors, but, on the other hand, it has a responsibility to its shareholders who also have joint interlocking interests in a business in the bank group. This is a no win situation where the interests of two important constituencies in the bank group are in conflict. In the Chilean case, it led to a banking crisis that induced a conservative market oriented regime to nationalize the banking industry. This action was undertaken to protect depositors from wholesale losses as companies in one bank group after another began to fail in the midst of the recession of the early 1980s, prompting depositor runs on the banks.

In the Gambian context, there is no feasible environment for group banking. The two strongest banks with the longest tradition of sound banking (the SCBG and BICI) are banks that come from a non-group heritage and would clearly be not inclined to undertake

an expansion into conglomerate banking. They are extremely risk averse in their lending behavior and would not be likely candidates to engage in conglomerate banking. The other two banks (Continental and Meridien) are relative newcomers, one of whom is still fighting litigation to remain open, while the other has just opened. More pertinent is the challenge to regulatory authorities in the Central Bank. They have a sufficient task to monitor and regulate the existing conventionally defined banking industry. It would be unwise to expect them to regulate conglomerate banking with its much more complex and risky group arrangements. In summary, it is appropriate for Gambian banking to remain in its present mode of conventional banking.

3. The Stock Market

The above discussion on conglomerate banking leads to the question of whether there are other alternative term financing vehicles available for The Gambia to substitute for the failed development bank option. Most do not appear promising, nevertheless, it is instructive to review the alternatives. One is a stock market. This of course avoids the pitfalls of debt finance discussed at length in our review of the GCDB history in Chapter One. However, this does not appear feasible given the limited market size in The Gambia. In 1991, only about three percent of the T-bill purchases were made by the non-bank, non-public enterprise public. This barely represented 9 million dalasis, hardly a base for a stock market from this more affluent level of the Gambian public. Moreover, these people were looking for a secure, risk-free return in T-bills. It is not likely that many would shift to riskier investments in a local stock market. At the same time, the local banks and public enterprises who stand out in the T-bill market (particularly the former) would likewise be unusually cautious about switching investments from a secure T-bill market to a thin and unpredictable stock market. Finally, one has to ask who will offer stock issues in this market? Given the closely held nature of private businesses in The Gambia, it is unlikely any would issue stock at all, and if they would, they would always control the predominant majority of shares, thereby leading to potential "insider" problems that could compromise the rights of minority shareholders. A well developed Securities and Exchange Commission would be needed to prevent these classic abuses in an unregulated market through strong public disclosure requirements and related regulatory functions. Given the poor performance of public sector banking, and the growing demands on authorities to regulate the banking industry, it would not appear likely that Gambian authorities would be interested in nor prepared to successfully regulate a local stock market.

4. Leasing Arrangements

An additional term finance vehicle is leasing (Kamath). Instead of engaging in loans, financial intermediaries or leasing companies can choose to work through leasing arrange-

ments. This removes one troublesome feature of long term loans, namely, the foreclosure of collateral. Since the property in question belongs to the lender there is no legal question involved in repossessing the property. Furthermore, if the cash flow of a project declines, both the leasor and leasee can work out agreements to end the lease in contrast to a long term loan where the borrower is locked into a long time horizon of installment payments even in the face of a shortfall in project earnings or even outright failure.

Leasing arrangements are usually associated with portable property (i.e. automobiles, trucks, buses, tractors, equipment, etc.). After an initial downpayment, the leasee agrees to pay the leasor a fixed fee for use of the equipment for a stipulated period of time at the end of which time the leasee may have an option to purchase or return the equipment in question. For leasing to work successfully, several important markets must be functioning efficiently, namely insurance markets, repair services, and a secondary market for the equipment or vehicle in question. Insurance markets are necessary to protect the leasor against possible damage to the equipment. At the same time, an efficient maintenance and repair service industry must be in place to monitor and inspect the state of the equipment at prescribed intervals on behalf of the leasor. Thirdly, there must be an active secondary market for the leased equipment to allow the leasor an option to conveniently repossess and sell the equipment to recoup his investment in the event of an unsatisfactory lease. The ever present possibility of this option also induces the leasee to meet his lease payments regularly. Finally, tax advantages favor leasing when both the leasor and leasee can write off depreciation charges (for the leasor) and interest or lease payments (for the leasee) respectively.

It would appear that some market niches exist for leasing arrangements in The Gambia. One firm is reportedly leasing mini-vans successfully in the Banjul area. This is a classic market for lease arrangements as all of the above requirements are met: an insurance industry to cover the vehicles, a service sector to inspect and repair the vehicles, and an active, assured secondary market for resale of the vehicles. When such conditions exist, natural market forces can emerge to fill the niches for leasing arrangements through entrepreneurial initiative.

Banks in developed economies frequently set up their own leasing companies. Such a move in The Gambia appears unlikely. Investment in specialized human capital would be needed and the markets for leasing in The Gambia generally do not have sufficient scale economies to justify such a move. However, it is not unreasonable to expect that local banks might help finance some of the working capital needs of firms well established in successful market niches like the one described above or possibly directly compete in the urban mini-van transport market now that one operator has established its profitability. English banks have a tradition of offering leasing services. Conceivably, Standard Chartered Bank could benefit from the leasing experiences of its larger branches in such countries as Kenya or Zimbabwe and transfer the lessons learned to the Gambian market. The key issue here is the size of the leasing market in a country as small as The Gambia, and whether risk averse banks would incur the start-up investment costs of such a venture. No information

is presently at hand to determine if banks in The Gambia are in fact considering such a move. However, it is the most likely term finance option for private banks to consider in the Gambian market.

5. Guarantee Funds

By far the most commonly used vehicle to promote term finance (outside of development banks) is guarantee funds. These are designed to induce banks to make loans to a clientele they otherwise wouldn't service with loans. With a 100 percent guarantee, perverse incentives may exist inducing banks to make loans carelessly and not engage in much monitoring or determined loan recovery since they are guaranteed full compensation for all losses. Unlimited deposit insurance leads to this form of moral hazard as seen in the recent savings and loan industry crisis in the U.S. At the other extreme is limited coverage, say 50 or 60 percent, in which a substantial part of the bank's own funds is at risk. The banks clearly want to negotiate an agreement as close to 100 percent as possible while donors and government try to reduce the guarantee. The danger of too low a guarantee is that the banks share of risk becomes too high and the fund is not resorted to as banks refuse to make loans under the program. Too high a guarantee increases moral hazard into the program as banks do not evaluate creditworthiness carefully or engage in determined loan recovery.

Even 100 percent guarantee programs are not necessarily attractive. Banks frequently have to incur high transaction costs to prove they have made a determined effort to collect on outstanding defaulting loans including legal and court proceedings before they can access the guarantee fund. In light of these costs, many banks avoid guarantee programs altogether. The literature has generally been very skeptical about the extent to which guarantee programs contribute any additionality to loan programs (Levitsky and Prasad). The World Bank small and medium enterprise guarantee program has moved very little money in the late 1980s. The challenge is to choose a beneficiary group that is not too far beyond the normal risk horizon of the bank, and then negotiate to bring the client groups risk profile within the financial frontier of the bank. Too often the clientele group chosen is too far from the risk threshold of the bank so that no amount of tinkering with the terms and conditions (the risk exposure of the bank, the interest rate spread, the criteria for access to the fund, etc.) will ever bring the target group into the range of the banks risk frontier.

NGOs can sometimes make a difference in lowering the risks and transaction costs for the bank by undertaking the responsibility of screening and sorting individual creditworthy clientele or forming solidarity groups who in fact practice responsible loan habits and generate a return on loan contracts. These success stories have been more noted in Latin America than Africa. Moreover, it is important to note that these successful programs emphasize working capital rather than investment loans (Berger and Buvinic; Magill and Swanson). Crucial here is the degree to which these valuable "brokering" services are effective and the reputation of the NGO. Clearly, the latter will have to have credibility

with the banks before they would enter into a guarantee program with them. The NGO community in The Gambia has not yet reached the level of experience and performance in financial markets (with the possible exception of the VISACA group) that one could envision them playing a comparable role with local banks in the near future.

Finally, one must point out the issue of the credibility of the government or the Central Bank in honoring guarantee programs. The GCDB never received any compensation for the "guaranteed" losses they suffered in the IBAS loan guarantee program. It has been reported that one of the private banks was never compensated for losses associated with the failure of a hotel guarantee loan in the mid-1980s. Clearly, if the government chooses not to honor guarantee commitments, these programs will not be undertaken by the banks. Currently, the Gambian government has signed commitments with donors not to sponsor any guarantee programs. Thus, any discussion of designing and implementing guarantee programs in the financial markets of The Gambia has become redundant.

6. Contractual Savings Programs

Another alternative term finance facility is contractual savings programs. In developed countries, this refers to the large funding base represented by institutional investors (i.e. insurance companies, pension funds, etc.) These operators play an important role in financing investment through long term capital markets of developed countries. In The Gambia, however, where such markets are absent, contractual savings programs logically invest their surplus in government securities. The Social Security and Housing Finance Corporation (SSHFC) is the principal contractual savings institution in the country. It consists of: (a) a Federated Pension Scheme made up of parastatal employees in which the employer pays in full 19 percent of employee salaries into the fund; (b) a National Provident (i.e. pension) Fund for private sector employees in which the employer contributes 10 percent and the employee 5 percent of the relevant salary base, and; (c) a housing finance fund that secures appropriations from the government, interfund transfers generated by the two pension funds and from external sources such as Shelter Afrique and other donors. As of June 1991, there were 29 member institutions (with a total number of 6,233 employees) in the Federated Pension Scheme (the parastatal pension fund). The National Provident Fund (NPF), on the other hand, includes 550 private businesses with a total of 16, 877 employees. Civil servants within the government have their own pension scheme separate from these funds discussed here.

The SSHFC is not important in formal loan markets. Only the pension fund associated with former parastatal employees makes loans (largely to its staff and to the housing fund), but this represents less than one percent of total outstanding loans in the banking system in 1991. However, the accumulated assets of the SSHFC are clearly more important. To place these assets in a relative context, they amount to 20 percent of the

assets held by the formal banking system in 1991, while SSHFC T-bill purchases in 1991 represent 18 percent of the total T-bill market of that year.

Given the relative importance of assets and government securities in the portfolio of the SSHFC, it is instructive to review the growth and composition of gross assets in the three funds of the SSHFC and then speculate on the implications for term finance. Appendix I-2 Table 1 sets forth the relative size of each of these three funds in the asset structure of the SSHFC. The housing finance fund is clearly less developed than the two pension funds, however, it has grown more rapidly in 1991 through the launching of the Kaninfing low income sites and services housing project. Also, it is clear that the private sector pension fund (i.e., the National Provident Fund) has been growing more rapidly than the parastatal employee fund (i.e., the pension fund derived from the Federated Pension Scheme of the 1970s). The relative share of the former has been growing from 1984 to 1991 (from 41 to 45 percent) while the share of the latter has declined from 50 to 42 percent of total SSHFC assets. The percentage change of total assets in Appendix I-2 Table 2 is consistent with the changing relative shares in the first table, highlighting the greater relative growth of the private sector over the public sector pension fund.

These results conform to the rapidly declining parastatal activity in the recent past in The Gambia. Fewer and fewer parastatal employees are now available to elicit the employer annual contributions of earlier years. The major activity increasing the assets of the pension fund is the rate of return on its asset portfolio. New annual contributions are rapidly declining with the decline in parastatal employment. In contrast, the private sector provident fund has been growing rapidly with the relative growth of private sector activity in the economy in recent years. Consequently, the growing annual contribution of both private sector employees and their employers add to the asset base of this fund along with the rate of return on its existing assets. Finally, the housing finance fund grows in part through appropriations from the surplus balances of both employee pension funds. With the relative decline of the public sector parastatal pension fund and the rapid growth of the private sector provident fund, it is clear that the profits or surplus from the latter are now playing a more important role in financing the housing fund through interfund loans.

It is instructive now to review the form of governance for the SSHFC. In 1991, the Board of Directors was reconstituted following the signing of a World Bank initiated performance contract between the government and the SSHFC. The purpose of the Contract was to get the SSHFC management to 'improve on corporate efficiency and to fulfill certain target objectives in exchange for the Government's grant of greater autonomy in the management of the Corporation's affairs.' The Board is now composed of 10 members, five of whom are Executive Directors of the SSHFC. Two of the other five are Government employees (the Permanent Secretary of the Ministry of Finance and the Chief Executive of the National Investment Board) and the other three are nominated members. The three nominated members include one from the Private Sector one nominated by members of the Federated Pension Scheme (FPS) and one nominated by the members of the National Provident Fund (NPF). In light of the growing size of the private sector

pension fund in the SSHFC, there should be a greater representation of private sector business on the Board of Directors. The current Board is still weighted too heavily by public sector representation reflecting a legacy from the past.

Appendix I-2 Table 3 sets forth the asset composition of the SSHFC. Investment assets play a far more dominant role in the provident than in the pension fund (92 vs. 56 percent). Also, the pension fund is the only fund that records loans, while current assets in the form of bank balances and interfund fund transfers stand out for the housing fund. Investment assets are spread throughout a wider array of holdings in the pension fund reflecting the legacy from its past when it held small equity shares in parastatal operations and in mortgage properties. The provident fund, in contrast, largely holds its assets in T-bills and term deposits. The growing role of government securities (largely T-bills) stands out for the provident fund in Appendix I-2 Table 4 where one can see that by 1991, the provident fund accounted for practically double the share registered for the pension fund. Among other things, this has secured a stable rate of return for the provident funds asset portfolio.

Finally, it is revealing to analyze the income and expense statements for the three funds in the SSHFC. These income and expense statements are set forth in Appendix I-2 Table 5. The National Provident Fund (NPF) records a loss while the other two programs record surpluses for this period. This is in part misleading and should not be interpreted that the NPF is compromising the interests of its private sector pensioners. In fact, just the opposite is the case. The benefits payable under each Scheme is equivalent to the balance owed on the member's account. However, the FPS provides for the conversion of such benefits into annuities while the NPF pays out its benefits in lump sums. This is an important difference. While the FPS conversions are determined using the actuarial equivalents, the NPF lump sum payments are equal to the actual balances together with accrued interest on the member's account at the time that the payments are made. The NPF member's accounts are therefore credited annually with interest income (see line 2 of Appendix I-2 Table 5). The rate is set in order that the Fund operates with only a 2 percent margin to cover administrative expenses. This low rate was set by the government in 1981. Although the SSHFC has realized that they have been 'losing' money on the Fund (to the benefit of the members) through this unrealistically low margin, the Corporation cannot change the rate unilaterally. The SSHFC has therefore requested that the Cabinet (and Parliament) increase its margin.

Finally, it is appropriate to conclude this discussion by exploring the way in which these contractual savings programs may become a vehicle for term financing in The Gambia. In 1990/91 the Corporation applied for a license from the Central Bank to start a voluntary savings and loan scheme. Although the scheme has yet to get off the ground, it is instructive to review the initiative.

The savings window would be open to the public at large. Loans would be granted to these depositors for housing only. In short, it would be a specialized lender, drawing

upon deposit liabilities and long term external loans from Shelter Afrique and other donors to meet the growing demand for housing loans. This would presumably represent a third tier to housing policy in The Gambia with the first tier representing completely built low cost public housing complexes (the Bakoteh Estate mortgage debtors), and the second tier made up of the sites and services project for the Kaninfing mortgage debtors. This third tier would be based on individual clients borrowing to build a home on properties they currently hold through renewable, 99 year lease hold leases. These properties would be held as collateral by the SSHFC for their housing loans.

The apparent mismatch between short term deposit liabilities and long term housing loans would be corrected through a scheme of automatic salary deduction into the depositor-borrower's savings account. In short, the savings account, once a housing loan is in place, no longer is a voluntary withdrawable account. On the contrary, it becomes a contractual savings account to service the loan obligation. Finally, the leasehold collateral is strengthened through the ease with which the SSHFC can automatically take over a collateralized leasehold in the event of a defaulting debtor. The SSHFC does not fall under the Financial Institutions Act (FIA). It operates under a separate act of parliament that expedites a quick right of repossession and the option to lease the property of a defaulted borrower to a third party or run it itself. A bank under the FIA must sell only to cover its outstanding debts. In the end, the legal transaction costs of repossession and rental are less cumbersome through the SSHFC than through banks.

In summary, the SSHFC actually received permission to open its saving and loan facility, but did not exercise its option before its charter permission ran out at the end of the year. The prospective design appears sound. None of the pensioners accumulated savings are involved. The collateralized property holdings would appear secure and the mismatch between assets and liabilities dealt with. On the whole, this experiment in specialized lending for housing appears to be a reasonably sound prospect for the expansion of financial services in the term lending market niche currently overlooked in the banking industry.

REFERENCES

Berger, Marguerite, and Mayra Buvinic, Women's Ventures: Assistance to the Informal Sector in Latin America, Kumarian Press, 1989.

Herrick, Bruce, et al., Ecuador Micro-Enterprise Sector Assessment: Policy Framework, Gemini Technical Report No. 10, Bethesda, MD, March 1991.

Kamath, K.V., The Principles and Practice of Leasing, Lease Asia, England, 1990.

Levitsky, Jacob, and Ranga N. Prasad, "Credit Guarantee Schemes from Small and Medium Enterprises," World Bank Technical Paper No. 58, Industry and Finance Series, World Bank, Washington, 1987.

Magill, John, and Donald Swanson, Ecuador Micro-Enterprise Sector Assessment: Summary Report, Gemini Technical Report No. 8, Bethesda, MD, April 1991.

McKinnon, Ronald I., "Macroeconomic Instability and Moral Hazard in Banking in a Liberalizing Economy," in Latin American Debt and Adjustment: External Shocks and Macroeconomic Policies, edited by Philip Brock, Michael Connelly and Claudio Gonzalez-Vega, Praeger Press, 1989.

Sagari, Silvia B. with Gabriela Guidotti, Venture Capital: Lessons from the Developed World for the Developing Markets, Discussion Paper No. 13, International Finance Corporation, The World Bank, Washington, D.C., 1992.

Appendix I-2 Table 1 **Share of Total Gross Assets of the Social Security and Housing Finance Corporation Allocated Among the Three Major Funds of the Program.**

	Percent		
	1989	1990	1991
	(1)	(2)	(3)
Pension Fund	49.9	47.9	42.1
Provident Fund	41.0	43.8	45.2
Housing Fund	41.0	8.2	12.6
Total (%)	100.0	100.0	100.0
Total (dalasis)	(98,867,021)	(123,363,080)	(163,936,231)

Source: SSHFC Balance Sheets, 1989-91.

Appendix I-2 Table 2 **Percentage Change in Total Assets for the Three Funds of the Social Security and Housing Finance Corporation (1989 through 1991).**

		Percentage Change	
		1989-90	1990-91
		(1)	(2)
1.	Pension Fund	7.1	10.3
2.	Provident Fund	33.8	37.6
3.	Housing Fund	14.3	102.0

Source: Balance Sheets of SSHFC, 1989-91.

Appendix I-2 Table 3 Composition of Gross Assets of the Social Security and Housing Finance Corporation (as of June 30, 1991).

	Percent (%)		
	Pension Fund	Provident Fund	Housing Fund
	(1)	(2)	(3)
I. Fixed Assets	17.9	0.1	-
II. Investment Assets	56.2	92.1	76.0
1. Government Securities (Dev. Stock, Discount Notes, and Treasury Bills)	(33.1)	(56.9)	(23.0)
2. GPMB Groundnut Bills	(2.4)	(11.3)	(7.9)
3. Bank Term Deposits	-	(23.9)	(2.4)
4. Equity Holdings	(7.1)	-	-
5. Investment Properties	(9.2)	-	
6. NTC Ltd. Debentures	(4.3)	-	
7. Bakoteh Mortgage Debtors	-	-	(23.3)
8. Kaninfing Mortgage Debtors	(0.1)	-	(19.0)
9. Other Investments	-	-	-
III. Loans	14.7	-	-
1. Interfund loans	(10.8)		
2. Staff loans	(3.2)		
3. Other loans	(0.7)		
IV. Current Assets (Interfund transfers; prepayments on loans, mortgages; bank balances)	11.1	7.8	24.0
Total Assets (%)	100.0	100.0	100.0
Total Assets (in Dalasis)	(69,034,438)	(74,225,383)	(20,676,410)

Source: Consolidated Balance Sheet of SSHFC, 1991.

Appendix I-2 Table 4 **Percentage Allocation of Government Securities (Development Stocks, Discount Notes and Treasury Bills) of the Social Security and Housing Finance Corporation Among its Three Major Funds, 1989-91.**

		Percent		
		1989	1990	1991
		(1)	(2)	(3)
1.	Pension Fund	43	36	33
2.	Provident Fund	51	57	60
3.	Housing Fund	6	7	7
Total		100	100	100

Source: Balance Sheet of SSHFC, 1989-91.

Appendix I-2 Table 5 Income and Expense Statements for SSHFC Funds (For Year Ended 30 June 1991).

	Pension Fund	Provident Fund	Housing Fund
	(1)	(2)	(3)
1. Income			
Investment Income	6,526,561	10,957,867	1,068,064
Rents	607,301	-	-
Interest on Loans	106,982	-	-
Sundry Inc.	2,838	-	-
Gross Income	7,243,682	10,957,867	1,068,064
2. Less Charges on Gross Income			
Interest on NPF member accounts		(9,792,721)	
Provision for Gross Income Royalty	(125,144)		
3. Net Income	7,118,538	1,165,146	1,068,064
4. Recurrent Expenditure			
(operating expenses, admin. expenses, etc.)	2,014,558	2,020,910	820,424
5. Surplus (Deficit)	5,103,980	(855,764)	247,640

Source: SSHFC Income and Expense Statements, 1991.

65

Tables I-1 through I-51

Previous Page Blank

Table I-1 **Market Structure of the Banking Industry in The Gambia, for Selected Years, 1980/81 to 1991/92.**

	1980/81	1981/82	1982/83	1985/86
	(1)	(2)	(3)	(4)
Total Number of Banks	4	4	5	4
Total Number of Branches	12	13	14	13
Total in Greater Banjul	9	10	11	10
Total Outside Greater Banjul	3	3	3	3
Number of New Banks (opened in year)	1	1	1	0
Number of Closed Banks (in year)	0	1	0	1

	1988/89	1990/91	1991/92
	(5)	(6)	(7)
Total Number of Banks	3	4	4
Total Number of Branches	12	13	13
Total in Greater Banjul	9	10	10
Total outside Greater Banjul	3	3	3
Number of New Banks (opened in year)	0	1	1
Number of Closed Banks (in year)	1	0	1

Source: Central Bank of The Gambia files.

Table I-2 **Bank Openings and Closings for Banks Operating in The Gambia, 1980/88 to 1992/93.**

	Banks	Year Opened	Year Closed
		(1)	(2)
1.	Gambia Commercial and Development Bank (GCDB)	1972	1992
2.	Standard Chartered Bank (SCB)	[1]	operating
3.	International Bank of Commerce and Industry (BCCI)	[2]	operating
4.	General Merchant Financial Institution (GMFI)	1980/81	1981/82
5.	Agricultural Development Bank (ADB)	1981/82	1988/89
6.	International Bank of West Africa (IBWA-BIAO)	1982/83	1985/86
7.	Continental Bank (CB)	1990/91	in litigation
8.	Meridien Bank (MB)	1992/93	beginning operation

Source: Central Bank of The Gambia files.
Note 1: The Standard Chartered Bank dates back to the Colonial Period.
2: The BICI was founded shortly after Gambian independence in the mid-1960s.

Previous Page Blank

Table I-3 **Outstanding Balances of Private and Public Sector Credit in The Gambia, 1981-1991 (Millions of Current Dalasis).**

Year	Total Private Sector Credit	Total Public Sector credit (net claims on govt. plus credit to public entities)	Total Domestic Credit
	(1)	(2)	(3)
1981	96.9	113.4	210.3
1982	83.1	158.7	241.8
1983	165.8	165.4	331.2
1984	143.4	235.8	379.2
1985	146.6	255.1	401.9
1986	183.5	301.9	485.5
1987	174.2	153.1	327.3
1988	192.6	63.9	256.5
1989	224.5	17.3	241.8
1990	250.3	-171.7	78.6
1991	289.8	-277.3	12.5

Source: Central Bank of The Gambia, data derived from monetary survey data in Table 7 of Central Bank bulletins (basic statistics for June of each year).

Table I-4 **Real Outstanding Balances of Private and Public Sector Credit in The Gambia 1981-1991 (millions of 1976/77 dalasis).**

Year	Total Private Sector Credit	Total Public Sector Credit (net claims on govt. plus credit to public entities)	Total Domestic Credit
	(1)	(2)	(3)
1981	89.94	99.80	189.75
1982	89.19	135.05	224.24
1983	138.77	38.53	277.40
1984	101.16	66.22	267.44
1985	94.87	165.12	259.99
1986	77.29	127.19	204.49
1987	54.44	47.86	102.39
1988	56.45	18.73	75.19
1989	57.67	4.43	62.11
1990	55.59	-38.13	17.45
1991	58.27	-55.76	2.51

Source: Central Bank of The Gambia, various bulletins.

Table I-5 **Indices of Real Private Sector, Public Sector and Total Credit in The Gambia (1981=100).**

Year	Total Private Sector Credit	Total Public Sector Credit	Total Domestic Credit
	(1)	(2)	(3)
1981	100.00	100.00	100.00
1982	99.15	135.31	118.17
1983	154.28	138.80	146.19
1984	112.47	166.54	140.94
1985	105.47	165.44	137.01
1986	85.93	127.44	107.77
1987	60.53	47.95	53.91
1988	62.76	18.77	39.62
1989	64.12	4.44	32.73
1990	61.80	-38.20	9.19
1991	64.79	-55.87	1.32

Source: Table I-4.

Table I-6 **Ratios of Credit to Total GDP.**

Year	Private Sector Credit/GDP	Total Domestic Credit/GDP
	(1)	(2)
1981	24.96	52.66
1982	22.72	57.13
1983	31.38	62.73
1984	23.97	63.37
1985	21.79	59.74
1986	16.90	44.73
1987	11.58	21.77
1988	11.81	15.73
1989	11.59	12.49
1990	10.58	3.32
1991	10.86	0.46

Source: Central Bank of the Gambia, various bulletins.

Table I-7 **Indices of Real and Sectoral GDP in The Gambia 1981-1991 (1981=100).**

Year	Agriculture GDP	Industry GDP	Services GDP	Total GDP	GDP Growth Rate (%)
	(1)	(2)	(3)	(4)	(5)
1981	100.00	100.00	100.00	100.00	
1982	142.38	79.40	99.53	108.93	8.9
1983	171.93	69.85	111.55	122.73	12.6
1984	135.56	83.65	113.97	117.12	-4.5
1985	145.00	81.10	116.65	120.78	3.1
1986	129.20	112.10	149.84	126.87	5.8
1987	138.18	129.04	148.26	130.40	2.8
1988	136.79	120.57	155.07	132.63	1.7
1989	133.20	125.49	165.51	138.01	4.1
1990	144.84	135.05	172.25	145.73	5.6
1991	124.62	138.70	186.25	148.80	2.1

Source: Central Bank of The Gambia, Various Bulletins.

Table I-8 **Managed Fund Account (i.e. volume of credit outstanding transferred from the GCDB) in Absolute and Relative Terms by Private and Public Sector Allocation and Sector of Economic Activity in 1987.**

	Sectoral Allocation (in millions of 1976/7 dalasis)	Percentage of 1987 Credit (%)
	(1)	(2)
Private	10.3	18.9
Public	12.5	26.0
Total	22.8	22.0

	Economic Activity Allocation (in millions of 1976/7 dalasis)	Percentage of 1987 Credit (%)
	(1)	(2)
Agriculture	7.4	54.5
Fishing	2.3	48.0
Construction	2.6	35.5
Transportation	0.3	7.2
Trade	0.7	4.3
Tourism	2.2	45.0
Others	4.1	49.0

Source: Data provided by Gambian authorities.

Table I-9 **Total Revenue and Expenditures for Central Government Operations in The Gambia 1985/6 to 1991/2 (in millions of current dalasis).**

	1985/6	1986/7	1987/8	1988/9	1989/90	1990/91	1991/92 (estimated)
	(1)	(2)	(3)	(4)	(5)	(6)	(7)
1. Total Revenue and Grants	271.8	484.7	490.1	565.2	659.6	678.5	827.3
a) Domestic Tax Revenue	212.7	328.2	323.5	450.5	508.4	533.3	652.6
b) Foreign Grants	59.1	156.4	156.6	114.7	151.2	145.2	198.7
2. Total Expenditure and Net Lending	286.0	546.9	602.5	504.6	700.6	644.8	774.5
a) Current Expenditure	183.3	327.0	433.7	354.8	434.4	452.4	509.7
b) Development Expend. and Net Lending	94.8	221.8	179.4	138.8	262.1	194.9	264.8
3. Unallocated Expenditure	7.9	-1.9	-10.6	11.0	4.1	-2.6	--
4. Surplus or Deficit							
a) Excluding Foreign Grants	-110.3	-232.8	-274.4	-79.6	-192.2	-111.5	-122.0
b) Including Foreign Grants	-51.2	-76.3	-117.8	35.1	-41.0	33.7	76.8
			(as percent of GDP)				
5. Domestic Revenue	24.7	22.1	20.4	23.2	21.7	19.8	20.9
6. Total Expenditure plus Net Lending	33.5	36.8	36.6	26.0	29.9	24.0	24.8
7. Surplus or Deficit							
a) Excluding Foreign Grants	-12.8	-15.7	-16.8	-4.1	-8.2	-4.1	-0.9
b) Including Foreign Grants	-6.0	-5.1	-7.2	1.8	-1.7	1.0	2.5

Source: Data provided by Gambian authorities.

Table I-10 **Real Gross Domestic Investment and Real Government Expenditure in The Gambia, 1987-1991 (millions of 1976/77 dalasis).**

Year	Real Private Investment	Real Government Investment	Real Government Expenditure
	(1)	(2)	(3)
1987	12.8	32.2	150.0
1988	5.5	32.0	184.0
1989	21.6	26.3	145.4
1990	43.8	26.6	132.2
1991	41.0	27.5	121.6

Source: Data provided by Gambian authorities.

Table I-11 **Indices of Real Private Investment, Real Government Investment and Real Government Expenditure in The Gambia, 1987-1991, (1987=100).**

Year	Real Private Investment	Real Government Investment	Real Government Expenditure
	(1)	(2)	(3)
1987	100.0	100.0	100.0
1988	42.9	99.4	122.7
1989	168.8	81.7	96.9
1990	342.2	82.6	88.1
1991	320.3	85.4	81.1

Source: Table I-10.

Table I-12 **Percentage Shares of Investment and Government Expenditure in GDP.**

Year	Real Private Investment	Real Government Investment	Real Govt. Exp.
	(1)	(2)	(3)
1987	2.7	6.8	31.9
1988	1.2	6.7	38.5
1989	4.3	5.3	29.2
1990	8.3	5.1	25.2
1991	6.7	4.6	22.6

Source: Table I-10.

Table I-13 **Liquidity Position of Commercial Banks in The Gambia 1987-1990, (millions of current dalasis).**

		1987	1988	1989	1990	1991
		(1)	(2)	(3)	(4)	(5)
1. Liquid Assets	(2 + 5)	102.08	150.54	144.61	177.69	193.72
2. Reserves	(3 + 4)	54.63	60.91	41.80	50.75	72.26
3. Deposits at CBG		49.99	54.47	34.93	41.75	58.43
4. Cash Holdings		4.64	6.44	6.87	9.00	13.83
5. T-Bills		47.45	89.63	102.81	126.95	121.46
6. Required Liquid Assets		73.88	87.69	96.23	103.99	124.15
7. Required Cash Reserves		33.94	41.17	43.25	48.78	59.08
8. Excess Cash Reserves	(2 - 7)	20.69	19.74	-1.45	1.97	13.18
9. Excess Liquidity	(1 - 6)	28.20	62.85	43.38	73.70	69.57

Source: Central Bank of the Gambia, Annual Report, 1990/1991, Table VIII.

Table I-14 **Distribution of Outstanding Government Securities in The Gambia, (millions of current dalasis).**

	1985	1986	1987	1988	1989	1990	1991
T-bills							
Central Bank	0	0	30.00	9.66	0.28	13.88	19.09
Commercial Banks	24.40	22.60	34.50	93.63	102.81	144.00	121.46
Public Enterprises	0	0	6.00	24.11	45.99	62.29	114.30
Nonbank Public	0	0	1.45	2.61	3.27	6.44	8.78
Total	24.40	22.60	71.95	130.01	152.35	226.61	263.63
Govt. Development Stock							
Central Bank	0	0	0	0	0	0	7.00
Commercial Banks	5.40	10.90	10.90	10.50	13.66	10.50	10.50
Public Enterprise	7.40	11.80	11.80	11.80	0	0	1.30
Nonbank Public	0.59	0.82	0.82	0.81	9.88	12.98	4.68
Total	13.39	23.52	23.52	23.11	23.54	23.48	23.48

Source: Central Bank of the Gambia, Annual Report 1990/1991, Table XVIII.

Table I-15 Composition of M2 in The Gambia, 1981-1991 (in millions of current dalasis).

Year	Total Domestic Credit	Net Foreign Assets	Net Other Items	Money Supply (M2)	T-bills Outstanding
	(1)	(2)	(3)	(4)	(5)
1981	210.3	-48.5	-75.6	86.2	14.7
1982	241.8	-101.7	-41.5	98.6	14.3
1983	331.2	-160.9	-37.8	132.5	26.5
1984	379.2	-322.7	80.5	137.0	25.6
1985	401.9	-336.7	117.3	182.5	24.6
1986	485.5	-584.8	326.8	227.4	22.6
1987	327.3	-313.2	313.1	327.3	71.9
1988	256.5	-175.9	313.7	394.3	130.0
1989	241.8	-151.9	337.1	427.0	152.3
1990	78.6	0.1	420.7	499.5	226.6
1991	12.5	143.9	427.7	584.1	263.6

Source: Central Bank of The Gambia, Various Bulletins.
Notes: Column 4 = Column 1 + Column 2 + Column 3.

Table I-16 **Real Commercial Bank Credit by Sector in The Gambia 1981-1991, (Loans Outstanding, millions of 1976/77 dalasis).**

Year	Agriculture	Construction	Services	Other	Total
	(1)	(2)	(3)	(4)	(5)
1981	46.29	9.05	44.05	42.38	141.78
1982	49.31	8.50	43.82	33.63	135.28
1983	51.17	6.53	42.96	42.91	143.59
1984	39.15	8.63	56.15	22.19	126.14
1985	37.89	11.55	44.36	30.08	123.89
1986	30.67	12.08	34.23	20.33	97.33
1987	18.38	7.32	25.31	17.37	68.39
1988	20.36	6.32	25.96	14.16	66.82
1989	14.87	5.74	24.80	20.87	66.31
1990	9.17	3.94	23.44	19.72	56.28
1991	9.45	2.84	25.84	18.40	56.55

Source: Central Bank of The Gambia, Various Bulletins, Table I-11 (commercial banks loans and advances to major economic sectors), converted to constant dalasis series by GDP deflator.

Table I-17 **Indices of Real Commercial Bank Credit by Sector in The Gambia (1981=100).**

Year	Agriculture	Construction	Services	Other	Total
	(1)	(2)	(3)	(4)	(5)
1981	100.00	100.00	100.00	100.00	100.00
1982	106.54	93.95	99.49	79.35	95.42
1983	110.55	72.18	97.53	101.25	101.28
1984	84.57	95.42	127.47	52.36	88.96
1985	81.86	127.58	100.69	70.98	87.38
1986	66.27	133.50	77.70	47.98	68.65
1987	39.71	80.88	57.46	40.99	48.33
1988	44.05	69.89	58.93	33.42	47.13
1989	32.14	63.48	56.31	49.26	46.77
1990	19.83	43.53	53.21	46.53	39.69
1991	20.43	31.40	58.67	43.42	39.88

Source: Table I-16.

Table I-18 **Ratio of Sectoral Credit (outstanding balances) to Sectoral GDP in The Gambia, 1981-1991 (percentages).**

Year	Agr. cr./Agr. GDP	Ind. cr./Ind. GDP	Ser. Cr./Ser. GDP
	(1)	(2)	(3)
1981	52.60	19.22	22.71
1982	39.36	22.74	22.70
1983	33.82	19.86	19.86
1984	32.81	21.92	25.40
1985	29.69	30.24	19.61
1986	26.98	22.89	11.78
1987	15.11	12.04	8.80
1988	16.92	11.14	8.63
1989	12.69	9.72	7.73
1990	7.20	6.19	7.01
1991	8.62	4.35	7.15

Source: Central Bank of The Gambia, Various Bulletins.

Table I-19 **Sectoral Shares of Total Gross Domestic Product in The Gambia, 1981-1991 (by major sectors).**

Year	Agriculture	Industry	Services
	(1)	(2)	(3)
1981	24.42	13.07	53.81
1982	31.92	9.52	49.17
1983	34.21	7.44	48.91
1984	28.27	9.33	52.36
1985	29.31	8.77	51.97
1986	24.87	11.55	63.55
1987	25.88	12.93	61.18
1988	25.19	11.88	62.92
1989	23.57	11.88	64.53
1990	24.27	12.11	63.61
1991	20.45	12.18	67.35

Source: Central Bank of The Gambia, Various Bulletins.

Table I-20 **Sectoral Shares of Total Commercial Bank Credit in The Gambia (Percentages) 1981-1991 (b major sectors).**

Year	Agriculture (%)	Industry (%)	Services (%)	Other (%)
	(1)	(2)	(3)	(4)
1981	32.65	6.38	31.07	29.89
1982	36.45	6.28	32.39	24.86
1983	35.64	4.55	29.92	29.88
1984	31.03	6.84	44.51	17.59
1985	30.58	9.32	35.80	24.28
1986	31.51	12.41	35.16	20.89
1987	26.87	10.70	37.01	25.40
1988	30.47	9.46	38.84	21.20
1989	22.43	8.67	37.41	31.48
1990	16.30	7.00	41.64	35.04
1991	16.72	5.02	45.70	32.54

Source: Central Bank of The Gambia, various bulletins.

Table I-21 **Measures of Real Sectoral Commercial Bank Credit in The Gambia, 1981-1991 (Loans Outstanding, millions of 1976/77 dalasis).**

Year	Agr.	Fish.	Constr.	Trade	Tourism	Transp.	Other	Personal
	(1)	(2)	(3)	(4)	(5)	(6)	(7)	(8)
1981	44.15	2.13	9.05	28.97	10.71	4.35	25.51	16.86
1982	48.10	1.21	8.50	27.12	11.17	5.53	17.13	16.49
1983	49.15	2.02	6.53	24.24	13.04	5.67	24.38	18.52
1984	31.07	8.08	8.63	37.15	12.50	6.49	6.43	15.75
1985	29.89	8.00	11.55	28.36	11.81	4.18	12.92	17.15
1986	21.54	9.12	12.08	23.25	7.35	3.62	9.58	10.75
1987	13.59	4.79	7.32	16.30	4.84	4.16	8.26	9.11
1988	14.27	6.09	6.32	15.39	6.47	4.09	4.94	9.22
1989	9.03	5.84	5.74	13.61	8.67	2.51	11.23	9.64
1990	4.48	4.69	3.94	13.66	9.02	0.75	10.71	9.01
1991	4.89	4.56	2.84	16.86	8.39	0.59	9.01	9.38

Source: Central Bank of the Gambia, Various Bulletins.

Table I-22 Indices of Real Sectoral Commercial Bank Credit in The Gambia (1981=100).

Year	Agr.	Fish.	Constr.	Trade	Tourism	Transp.	Other	Personal
	(1)	(2)	(3)	(4)	(5)	(6)	(7)	(8)
1981	100.00	100.00	100.00	100.00	100.00	100.00	100.00	100.00
1982	108.94	56.76	93.95	93.60	104.22	127.06	67.15	97.82
1983	111.30	95.06	72.18	83.66	121.69	130.35	95.57	109.86
1984	70.36	378.59	95.42	128.21	116.65	149.14	25.23	93.42
1985	67.68	375.09	127.58	97.87	110.22	96.06	50.64	101.75
1986	48.80	427.74	133.50	80.23	68.66	83.13	37.54	63.78
1987	30.77	224.50	80.88	56.25	45.20	95.68	32.37	54.02
1988	32.33	285.44	69.89	53.11	60.40	94.06	19.37	54.68
1989	20.46	273.77	63.48	46.97	80.96	57.82	44.01	57.19
1990	10.14	220.14	43.53	47.14	84.23	17.24	41.97	53.44
1991	11.08	213.71	31.40	58.17	78.30	13.66	35.34	55.65

Source: Same as Table I-21.

Table I-23 Sectoral Shares of Total Commercial Bank Credit in The Gambia (Percentages).

Year	Agr.	Fish.	Constr.	Trade	Tourism	Transp.	Other	Personal
	(1)	(2)	(3)	(4)	(5)	(6)	(7)	(8)
1981	31.14	1.50	6.38	20.43	7.55	3.07	17.99	11.89
1982	35.55	0.89	6.28	20.00	4.25	4.09	12.66	12.19
1983	34.22	1.41	4.55	16.88	9.08	3.95	16.98	12.90
1984	24.63	6.40	6.84	29.45	9.91	5.14	5.10	12.49
1985	24.12	6.46	9.32	22.89	9.53	3.37	10.43	13.85
1986	22.13	9.37	12.41	23.88	7.56	3.72	9.84	11.05
1987	19.87	7.00	10.70	23.83	7.08	6.09	12.07	13.32
1988	21.36	9.11	9.46	23.03	9.68	6.13	7.40	13.80
1989	13.62	8.81	8.66	20.52	13.08	3.79	16.93	14.54
1990	7.96	8.34	7.00	24.27	16.03	1.33	19.02	16.01
1991	8.65	8.06	5.02	29.81	14.83	1.05	15.94	16.59

Source: Same as Table I-21.

Table I-24 **Real Commercial Bank Credit by Sector and Bank Groups (GCDB and other commercial banks) in The Gambia, 1981-1991 (loans outstanding, millions of 1976/77 dalasis).**

Year	Total Agriculture		Construction		Trade		Tourism	
	(GCDB)	(Other Banks)	(GCDB)	(Other Banks)	(GCDB)	(Other Banks)	(GCDB)	(Other Banks)
	(1)	(2)	(3)	(4)	(5)	(6)	(7)	(8)
1981	45.72	0.56	4.75	4.30	12.33	16.64	6.16	4.55
1982	49.06	0.24	5.84	2.66	14.13	12.99	6.72	4.44
1983	49.98	1.19	5.02	1.51	11.66	12.58	7.86	5.17
1984	38.12	1.02	7.22	1.41	28.41	8.74	7.14	5.35
1985	36.90	0.99	10.44	1.10	21.60	6.76	5.27	6.53
1986	29.76	0.91	9.41	2.67	16.43	6.81	4.56	2.79
1987	16.66	1.71	4.55	2.76	11.23	5.06	3.04	1.80
1988	19.19	1.16	4.78	1.53	8.94	6.44	4.63	1.83
1989	13.60	1.27	4.14	1.59	6.06	7.55	7.09	1.58
1990	8.10	1.07	2.37	1.56	6.26	7.39	7.49	1.53
1991	7.69	1.76	1.08	1.75	6.98	9.87	7.00	1.39

Year	Transport		Services		Personal Loans		Other Loans		Total Loans	
	(GCDB)	(Other Banks)	(GCDB)	(Other Banks)	(GCDB)	(Other Banks)	(GCDB)	(Other Banks)	(GCDB)	(Other Banks)
	(9)	(10)	(11)	(12)	(13)	(14)	(15)	(16)	(17)	(18)
1981	4.02	0.33	22.51	21.53	13.65	3.21	38.68	3.70	111.67	30.10
1982	4.77	0.75	25.63	18.19	13.94	2.55	29.27	4.36	109.81	25.47
1983	5.56	0.11	25.09	17.87	14.77	3.75	37.83	5.07	117.94	25.65
1984	5.28	1.21	40.83	15.31	11.22	4.52	16.52	5.66	102.72	23.41
1985	4.08	0.09	30.96	13.39	13.13	4.01	25.44	4.63	103.75	20.13
1986	3.43	0.18	24.43	9.79	8.92	1.83	18.04	2.28	81.66	15.66
1987	3.95	0.21	18.23	7.07	7.41	1.69	15.29	2.07	54.75	13.64
1988	3.90	0.18	17.48	8.47	7.55	1.67	12.15	2.01	53.63	13.19
1989	2.12	0.39	15.28	9.52	7.48	2.15	18.39	2.48	51.43	14.87
1990	0.31	0.43	14.08	9.35	6.31	2.69	16.84	2.88	41.40	14.88
1991	0.33	0.26	14.31	11.53	6.09	3.29	14.70	3.70	37.79	18.75

Source: Data provided by Gambian authorities.

Table I-25 **Indices of Real Commercial Bank Credit by Sector and Bank Group in The Gambia, 1981-1991 (1981=100).**

Year	Total Agriculture		Construction		Trade		Tourism	
	(GCDB)	(Other Banks)	(GCDB)	(Other Banks)	(GCDB)	(Other Banks)	(GCDB)	(Other Banks)
	(1)	(2)	(3)	(4)	(5)	(6)	(7)	(8)
1981	100.00	100.00	100.00	100.00	100.00	100.00	100.00	100.00
1982	107.31	43.95	122.86	61.99	114.58	78.04	109.09	97.64
1983	109.32	209.88	105.70	35.14	94.54	75.60	127.70	113.56
1984	83.38	180.02	151.97	32.91	230.34	52.53	115.98	117.56
1985	80.70	174.73	219.67	25.79	175.12	40.62	85.70	143.37
1986	65.08	161.42	198.09	62.11	133.24	40.94	74.16	61.22
1987	36.44	302.64	95.88	64.30	91.12	30.40	49.38	39.55
1988	41.98	205.82	100.75	35.78	72.52	38.72	75.26	40.31
1989	29.75	224.22	87.27	37.17	49.14	45.36	115.21	34.67
1990	17.71	189.92	50.00	36.37	50.82	44.41	121.66	33.63
1991	16.82	310.47	22.83	40.86	56.62	59.33	113.64	30.53

Year	Transport		Services		Personal Loans		Other Loans		Total Loans	
	(GCDB)	(Other Banks)	(GCDB)	(Other Banks)	(GCDB)	(Other Banks)	(GCDB)	(Other Banks)	(GCDB)	(Other Banks)
	(9)	(10)	(11)	(12)	(13)	(14)	(15)	(16)	(17)	(18)
1981	100.00	100.00	100.00	100.00	100.00	100.00	100.00	100.00	100.00	100.00
1982	118.80	226.66	113.83	84.49	102.15	79.40	75.67	117.85	98.33	84.61
1983	138.40	33.75	111.44	82.98	108.20	116.89	97.82	137.13	105.61	85.20
1984	131.39	362.19	181.38	71.11	82.26	140.80	42.73	152.98	91.98	77.77
1985	101.63	29.16	137.53	62.18	96.26	125.07	65.78	125.23	92.91	66.86
1986	85.41	55.71	108.54	45.46	65.37	57.06	46.66	61.83	73.12	52.04
1987	98.28	64.37	80.98	32.87	54.34	52.69	39.54	56.09	49.02	45.30
1988	97.20	56.39	77.67	39.32	55.32	51.99	31.42	54.37	48.02	43.82
1989	52.87	117.22	67.88	44.21	54.86	67.08	47.56	67.02	46.05	49.41
1990	7.90	129.45	62.54	43.45	46.27	83.90	43.54	77.80	37.07	49.43
1991	8.27	78.36	63.58	53.53	44.63	102.43	38.01	99.96	33.84	62.28

Source: Same as Table I-24.

Table I-26 **Relative Shares of Commercial Bank Credit within each Sector by Bank Group in The Gambia, 1981-1991 (percentages).**

Year	Total Agriculture		Construction		Trade		Tourism	
	(GCDB)	(Other Banks)	(GCDB)	(Other Banks)	(GCDB)	(Other Banks)	(GCDB)	(Other Banks)
	(1)	(2)	(3)	(4)	(5)	(6)	(7)	(8)
1981	98.77	1.22	52.50	47.49	42.56	57.43	57.47	42.52
1982	99.49	0.50	68.65	31.34		42.10	52.16	39.83
1983	97.66	2.33	76.87	23.12	48.09	51.90	60.31	39.68
1984	97.38	2.61	83.61	16.38	76.46	23.53	57.14	42.85
1985	97.38	2.62	90.39	9.60	76.15	23.84	44.69	55.30
1986	97.01	2.98	77.90	22.09	70.68	29.31	62.08	37.91
1987	90.64	9.35	62.23	37.76	68.92	31.04	62.79	37.20
1988	94.25	5.74	75.68	24.31	58.11	41.88	71.61	28.38
1989	91.43	8.56	72.18	27.81	44.53	55.46	81.79	18.20
1990	88.24	11.75	60.30	39.69	45.89	54.11	83.01	16.98
1991	81.34	18.65	38.18	61.81	41.42	58.57	83.41	16.58

Year	Transport		Services		Personal Loans		Other Loans		Total Loans	
	(GCDB)	(Other Banks)	(GCDB)	(Other Banks)	(GCDB)	(Other Banks)	(GCDB)	(Other Banks)	(GCDB)	(Other Banks)
	(9)	(10)	(11)	(12)	(13)	(14)	(15)	(16)	(17)	(18)
1981	92.31	7.68	51.11	48.88	80.94	19.05	91.26	8.73	78.76	21.23
1982	86.30	13.69	58.47	41.52	84.53	15.46	87.02	12.97	81.16	18.83
1983	98.00	1.99	58.40	41.59	79.72	20.27	88.16	11.83	82.13	17.86
1984	81.32	18.67	72.72	27.27	71.27	28.72	74.47	25.52	81.43	18.56
1985	97.66	2.33	69.80	30.19	76.53	23.42	84.58	15.41	83.74	16.25
1986	94.84	5.15	71.39	28.60	82.95	17.04	88.74	11.25	83.90	16.09
1987	94.82	5.17	72.03	27.96	81.41	18.58	88.04	11.95	80.05	19.94
1988	95.38	4.61	67.3o	32.63	81.87	18.12	85.78	14.21	80.25	19.74
1989	84.41	15.58	61.61	38.38	77.64	22.35	88.11	11.88	77.56	22.43
1990	42.28	57.71	60.07	39.92	70.08	29.91	85.39	14.60	73.55	26.44
1991	55.88	44.11	55.39	44.60	64.92	35.07	79.89	20.10	66.84	33.15

Source: Same as Table I-24.

Table I-27 Currency, Demand Deposits, and M1 in The Gambia, 1981-1991 (millions of current dalasis).

Year	Currency	Demand Deposits	M1
	(1)	(2)	(3)
1981	24.59	32.79	57.38
1982	28.04	30.80	58.84
1983	39.20	41.50	80.70
1984	38.70	38.30	77.00
1985	42.10	54.30	96.40
1986	60.10	69.40	129.50
1987	95.90	96.40	192.30
1988	107.90	114.10	222.00
1989	118.90	116.30	235.20
1990	154.70	127.30	282.00
1991	168.90	165.40	334.30

Source: Central Bank of the Gambia, Various Bulletins.

Table I-28 Selected Measures of Money in The Gambia 1981-1991 (millions of current dalasis).

Year	Monetary Base[1]	M1[2]	M1 (%)	Quasi Money[3]	Quasi Money (%)	M2[4]	M2 (%)	Inflation Rate GDP deflator (%)
	(1)	(2)	(3)	(4)	(5)	(6)	(7)	(8)
1981	65.94	57.38		29.60		86.98		7.30
1982	60.95	58.80	2.40	40.00	35.1	98.84	13.63	3.37
1983	100.90	80.70	37.24	52.40	31.1	133.00	34.85	1.60
1984	50.30	77.00	-4.58	59.90	14.6	136.90	2.93	17.19
1985	57.60	96.40	25.19	86.00	43.6	182.50	33.30	8.64
1986	67.20	129.50	34.33	97.90	13.8	227.40	24.60	42.89
1987	128.70	192.30	48.49	134.80	37.7	327.30	43.93	29.85
1988	171.40	222.00	15.34	172.40	27.7	394.30	20.47	6.41
1989	165.10	235.20	5.94	191.90	11.5	426.90	8.27	13.18
1990	192.20	282.00	19.90	217.40	13.3	499.40	16.98	14.55
1991	224.90	334.30	18.54	249.80	14.9	584.10	16.96	9.90

Source: Central Bank of the Gambia, Various Bulletins.
Note 1: The Monetary Base consists of currency plus reserves in the banking system.
2: M1 consists of currency and demand deposits.
3: Quasi Money consists of interest earning deposits.
4: M2 consists of interest earning deposits and M1.

Table I-29 Measures of Financial Deepening and Velocity in The Gambia 1981-1991.

Year	M1/GDP	M2/GDP	M1 Velocity	M2 Velocity
	(1)	(2)	(3)	(4)
1981	0.14	0.21	7.13	4.70
1982	0.12	0.21	7.83	4.66
1983	0.15	0.25	6.54	3.96
1984	0.12	0.22	7.77	4.37
1985	0.14	0.27	6.97	3.68
1986	0.11	0.20	8.38	4.77
1987	0.12	0.21	7.81	4.59
1988	0.13	0.24	7.34	4.13
1989	0.12	0.22	8.23	4.53
1990	0.11	0.21	8.38	4.73
1991	0.12	0.21	7.97	4.56

Source: Central Bank of the Gambia, Various Bulletins.

Table I-30 Ratios of Currency to Selected Measures of Deposits in The Gambia, 1981-1991.

Year	Currency to Demand Deposits	Currency to Quasi Money
	(1)	(2)
1981	0.74	1.10
1982	0.91	0.77
1983	0.94	0.79
1984	1.01	0.63
1985	0.77	0.63
1986	0.86	0.70
1987	0.99	0.51
1988	0.94	0.66
1989	1.02	0.60
1990	1.21	0.58
1991	1.02	0.66

Source: Tables I-27 and I-28.

Table I-31 Selected Nominal Interest Rates and Inflation in The Gambia 1981-1991.

	A. Average Government Rates					B. Average Savings Rates				C. Average Lending Rates				
				Inflation										
Year	3 Month T-Bill	Long Term T-Bond	Discount Rate	GDP Deflator	CPI Index	Short Term Deposit	Savings Deposit	3 Month Time Deposit	12 Month Time Deposit	Agriculture	Manufacturing	Construction	Trade	Other
	(1)	(2)	(3)	(4)	(5)	(6)	(7)	(8)	(9)	(10)	(11)	(12)	(13)	(14)
1981	6.00	NA	9.50	7.30	7.87	NA	6.00	5.00	NA	NA	NA	NA	NA	NA
1982	8.00	NA	9.50	3.37	7.64	NA	8.00	8.50	NA	NA	NA	NA	NA	NA
1983	8.00	NA	9.50	1.60	8.94	NA	8.00	8.50	NA	NA	NA	NA	NA	NA
1984	8.00	8.50	9.00	17.19	14.43	7.75	7.25	9.00	13.00	14.00	13.50	13.50	15.00	16.50
1985	8.00	15.00	13.00	8.64	19.70	9.00	15.00	15.00	17.00	13.50	21.00	18.00	22.50	21.00
1986	15.00	15.00	17.00	42.89	30.10	13.50	18.00	18.00	19.50	17.00	20.50	18.00	24.00	26.00
1987	20.00	19.00	18.00	29.85	37.79	12.50	15.00	15.00	16.50	15.50	19.00	19.00	19.00	19.00
1988	17.00	19.00	15.00	6.41	11.81	10.00	13.75	13.75	16.25	19.00	19.50	19.50	18.50	19.00
1989	19.00	19.00	16.00	13.18	7.41	10.00	12.50	12.50	14.50	17.25	18.75	17.75	17.75	15.50
1990	18.50	19.00	16.50	14.55	13.13	10.00	12.50	12.50	14.00	24.25	24.25	23.25	25.25	25.00
1991	18.50	19.00	16.50	9.90	5.19	11.00	12.50	12.50	14.50	25.00	25.00	25.00	25.00	29.00

Source: Central Bank of the Gambia, Various Bulletins, Table I-13 (range of interest rates) where more than one rate is reported, the average of the minimum and maximum reported rates was used. The annual rate of change for the two price indices (columns 4 and 5) was derived by taking the first differences of the natural log of the respective price indices.

Table I-32 Selected Real Interest Rates in The Gambia 1981-1991.[1]

Year	A. Average Real Government Rates			B. Average Real Savings Rates				C. Average Real Lending Rates				
	3 Month T-Bill	Long Term T-Bond	Discount Rate	Short Term Deposit	Savings Deposit	3 Month Time Deposit	12 Month Time Deposit	Agriculture	Manufac-turing	Construc-tion	Trade	Other
	(1)	(2)	(3)	(4)	(5)	(6)	(7)	(8)	(9)	(10)	(11)	(12)
1981	-1.73	NA	1.50	NA	-1.73	-2.65	NA	NA	NA	NA	NA	NA
1982	40.33	NA	1.72	NA	0.33	0.79	NA	NA	NA	NA	NA	NA
1983	-0.86	NA	0.51	NA	-0.86	-0.40	NA	NA	NA	NA	NA	NA
1984	-5.62	-5.19	-4.75	-5.84	-6.28	-4.75	-1.25	-0.38	-0.82	-0.82	0.48	1.80
1985	-9.77	-3.92	-5.59	-8.93	-3.92	-3.92	-2.25	-5.17	1.08	-1.42	2.33	1.08
1986	-11.59	-11.59	-10.05	-12.74	-9.28	-9.28	-8.13	-10.05	-7.36	-9.28	-4.67	-3.13
1987	-12.91	-13.64	-14.36	-18.35	-16.54	-16.54	-15.45	-16.18	-13.64	-13.64	-13.64	-13.64
1988	4.63	6.42	2.84	-1.62	1.73	1.73	3.96	6.42	6.87	6.87	5.97	6.42
1989	10.78	10.78	7.99	2.40	4.73	4.73	6.59	9.15	10.55	9.62	9.62	7.52
1990	4.74	5.18	2.97	-2.76	-0.55	-0.55	0.76	9.82	9.82	8.94	11.15	14.03
1991	12.64	13.12	10.74	5.51	6.94	6.94	8.84	18.82	18.82	18.82	18.82	22.63

Source: Same as Table I-31.

Note 1: The real rates of interest were derived from the following formula: $\frac{1+i}{1+p}-1$, where i = the annual change in the nominal interest rate in Table I-31 and p = the annual rate of inflation. The Consumer Price Index (CPI) was used to measure inflation in this table rather than the implicit GDP deflator (see Table I-31, column 5).

Table I-33 Weighted Deposit Interest Rates in The Gambia 1981-1991.

Year	Nominal Deposit Rate 1	Real Deposit Rate 1	Nominal Deposit Rate 2	Real Deposit Rate 2
	(1)	(2)	(3)	(4)
1981	2.84	-4.66	2.96	-4.55
1982	4.51	-2.91	4.70	-2.73
1983	4.46	-4.11	4.65	-3.93
1984	4.42	-8.75	4.60	-8.59
1985	9.18	-8.78	9.57	-8.46
1986	10.53	-15.02	11.44	-14.32
1987	8.73	-21.09	9.49	-20.54
1988	8.26	-3.17	8.98	-2.53
1989	7.78	0.33	8.46	0.97
1990	7.88	-4.64	8.56	-4.04
1991	7.52	2.21	8.17	2.82

Note: Deposit Rate 1 is a weighted average of demand, savings and time deposits, without allowance for the relevant reserve requirements. Nominal Deposit Rate 2 is column 1 (nominal rate), but takes into account the following reserve requirements: 6 percent for demand deposits and 4 percent for savings and time deposits 1981-85; 10 percent for demand deposits and 8 percent for savings and time deposits 1986-87; 24 percent for demand deposits and 8 percent for savings and time deposits 1988-91.

Source: Bulletins, Central Bank of The Gambia.

Table I-34 Selected Weighted Lending and Asset Interest Rates in The Gambia, 1984-1991.

Year	Weighted Lending Rate 1	Real Weighted Lending Rate 1	Weighted Asset Rate 2	Real Weighted Asset Rate 2
	(1)	(2)	(3)	(4)
1984	15.33	0.77	14.20	-0.20
1985	19.23	-0.39	17.49	-1.84
1986	22.75	-5.63	21.68	-6.45
1987	18.41	-14.06	18.76	-13.81
1988	18.95	6.38	18.36	5.85
1989	16.40	8.36	17.16	9.07
1990	27.47	12.67	24.07	9.66
1991	27.36	21.07	24.68	18.52

Notes: Weighted Lending Rate 1 is a weighted average of commercial bank lending rates with the shares of sectoral lending as the weights. Weighted Asset Rate 2 is Weighted Lending Rate 1, including the return on 3 month T-Bills.

Source: Bulletins, Central Bank of The Gambia.

Table I-35 Gross Nominal Interest Rate Margins Between Average Lending and Deposit Rates in The Gambia, 1984-1991.

Year	Gross Margin 1	Gross Margin 2
	(1)	(2)
1984	10.73	9.60
1985	9.66	7.92
1986	11.31	10.24
1987	8.92	9.27
1988	9.97	9.38
1989	7.94	8.70
1990	18.91	15.51
1991	19.19	16.51

Notes: Margin 1 = Weighted Nominal Lending Rate 1 - Weighted Nominal Deposit Rate 2 (column 1 in Table I-34 and column 3 in Table I-33 respectively).
Margin 2 = Weighted Nominal Asset Rate 2 - Nominal Deposit Rate 2 (column 3 in Tables I-34 and I-33 respectively).
Source: Tables I-33 and I-34.

Table I-36 Ratios of Loans to Total Deposits of Commercial Banks in The Gambia 1986-1991.

Year	All Banks	GCDB	Other
	(1)	(2)	(3)
1986	1.43	2.50	0.45
1987	0.88	1.54	0.35
1988	0.81	1.51	0.25
1989	0.80	1.46	0.31
1990	0.71	1.32	0.31
1991	0.67	1.35	0.33

Source: Data provided by Gambian authorities.

Table I-37 Ratios of Loans to Total Deposits and Borrowings of Commercial Banks in The Gambia, 1986-1991.[1]

Year	All Banks	GCDB	Other
	(1)	(2)	(3)
1986	0.79	0.94	0.45
1987	0.64	0.84	0.35
1988	0.61	0.87	0.25
1989	0.64	0.92	0.31
1990	0.61	0.93	0.31
1991	0.60	0.97	0.33

Source: Same as Table I-36.
Note 1: Borrowings refers to borrowings from the Central Bank through the rediscount window and other instruments.

Table I-38 **Consolidated Balance Sheet for All Commercial Banks in The Gambia, 1986-1991 (in millions of current dalasis).**

Year	1986	1987	1988	1989	1990	1991
	(1)	(2)	(3)	(4)	(5)	(6)
ASSETS						
Cash	7.9	9.06	9.86	9.23	10.12	11.45
Govt. Sec.	0.39	0.34	0.24	119.75	139.17	167.99
Loans	244.8	207.45	232.59	259.8	255.77	283.68
Other Assets	181.7	322.89	347.6	186.12	207.56	273.96
Total Assets	434.88	539.74	590.29	574.9	612.62	737.08
LIABILITIES						
Borrowings	135.45	86.65	92.4	80.98	59.36	54.22
Demand Deposits	69.08	96.2	114.06	128.81	140.65	175.6
Sav. and Time Dep.	101.84	138.45	172	194.58	214.92	242.72
Other Liabilities	107.81	177.86	165.86	109.14	130.66	162.66
Total Liabilities	414.18	499.16	544.32	513.5	545.88	635.15
Capital	20.7	40.58	45.97	61.4	66.74	101.93

Source: Data provided by Gambian authorities.

Table I-39 **Balance Sheet for the GCDB, 1986-1991 (in millions of current dalasis).**

Year	1986	1987	1988	1989	1990	1991
	(1)	(2)	(3)	(4)	(5)	(6)
ASSETS						
Cash	3.18	2.48	2.34	1.94	3.1	3.1
Govt. Sec.	0.18	0.18	0.18	4.8	15.95	14.38
Loans	204.22	161.46	191.99	201.99	188.6	191.87
Other Assets	53.21	174.06	158.14	112.97	136.34	164.08
Total Assets	260.79	338.18	352.65	321.61	343.99	373.43
LIABILITIES						
Borrowings	135.45	86.65	92.4	80.98	59.36	54.22
Demand Deposits	23.25	33.53	34.54	34.48	35.01	32.71
Sav. and Time Dep.	58.4	71.26	91.87	103.44	108.02	109.21
Other Liabilities	36.43	124.53	112.54	99.8	121.77	143.23
Total Liabilities	253.53	315.97	331.35	294.14	301.46	316.91
Capital	7.26	22.21	21.3	27.47	42.53	56.52

Source: Files of the Central Bank of the Gambia.

Table I-40 **Balance Sheet for Other Commercial Banks in The Gambia, 1986-91 (in millions of current dalasis).**

Year	1986	1987	1988	1989	1990	1991
	(1)	(2)	(3)	(4)	(5)	(6)
ASSETS						
Cash	4.81	6.58	7.52	7.29	7.02	8.35
Govt. Sec.	0.21	0.16	0.06	114.95	125.22	153.61
Loans	40.58	45.99	40.6	57.9	67.17	91.81
Other Assets	128.49	148.83	189.46	73.15	71.22	109.88
Total Assets	1'/4.09	201.56	237.64	253.29	270.63	363.65
LIABILITIES						
Borrowings	0	0	0	0	0	0
Demand Deposits	45.83	62.67	79.52	94.33	105.65	142.89
Sav. and Time Dep.	43.44	67.19	80.13	91.4	107.1	133.59
Other Liabilities	71.38	53.33	53.32	33.64	31.68	41.81
Total Liabilities	160.65	183.19	212.19	219.37	244.42	318.24
Capital	13.44	18.37	25.45	33.92	26.21	45.41

Source: Data provided by Gambian authorities.

Table I-41 **Relative Shares of Assets and Liabilities for All Commercial Banks in The Gambia.**

Year	1986	1987	1988	1989	1990	1991
	(1)	(2)	(3)	(4)	(5)	(6)
			(percent)			
ASSETS						
Cash	1.83	1.67	1.67	1.60	1.65	1.55
Govt. Sec.	0.09	0.06	0.04	20.80	22.70	22.80
Loans	56.30	38.40	39.40	45.20	41.75	38.50
Other Assets	41.78	59.80	58.80	32.40	33.90	37.20
Total Assets	100.00	100.00	100.00	100.00	100.00	100.00
LIABILITIES						
Borrowings	32.70	14.36	16.97	15.77	10.87	8.53
Demand Deposits	16.70	19.30	20.90	25.08	25.70	27.70
Sav. And Time Dep.	24.50	27.70	31.60	37.90	39.30	38.20
Other Liabilities	14.40	39.40	33.90	21.20	23.90	25.60
Total Liabilities	100.00	100.00	100.00	100.00	100.00	100.00

Source: Table I-38.

Table I-42 Relative Shares of Assets and Liabilities for the GCDB.

Year	1986	1987	1988	1989	1990	1991
	(1)	(2)	(3)	(4)	(5)	(6)
			(percent)			
ASSETS						
Cash	1.20	0.70	0.70	0.60	0.90	0.80
Govt. Sec.	0.07	0.05	0.05	1.50	4.60	3.90
Loans	78.30	47.70	54.40	62.80	54.80	51.40
Other Assets	20.40	51.50	44.80	35.10	39.60	43.90
Total Assets	100.00	100.00	100.00	100.00	100.00	100.00
LIABILITIES						
Borrowings	53.40	27.40	27.90	27.50	19.60	17.10
Demand Deposits	9.10	10.60	10.40	11.70	11.60	10.30
Sav. and Time Dep.	23.10	22.60	27.70	35.17	35.83	34.46
Other Liabilities	14.40	39.40	33.90	25.70	32.90	38.10
Total Liabilities	100.00	100.00	100.00	100.00	100.00	100.00

Source: Table I-39.

Table I-43 Relative Shares of Assets and Liabilities for Other Commercial Banks.

Year	1986	1987	1988	1989	1990	1991
	(1)	(2)	(3)	(4)	(5)	(6)
			(percent)			
ASSETS						
Cash	2.80	3.30	3.20	2.90	2.60	2.30
Govt. Sec.	0.12	0.08	0.03	45.40	45.80	42.20
Loans	23.30	22.80	17.10	22.90	25.00	25.20
Other Assets	73.80	73.80	79.70	28.90	26.50	30.20
Total Assets	100.00	100.00	100.00	100.00	100.00	100.00
LIABILITIES						
Borrowings	0.00	0.00	0.00	0.00	0.00	0.00
Demand Deposits	28.50	34.20	37.30	43.00	43.20	44.90
Sav. and Time Dep.	27.00	36.70	37.60	41.70	43.80	41.90
Other Liabilities.	44.40	29.10	25.00	15.30	12.90	13.10
Total Liabilities	100.00	100.00	100.00	100.00	100.00	100.00

Source: Table I-40.

Table I-44 **Percentage Changes in Assets and Liabilities of All Commercial Banks in The Gambia 1987-1991.**

Year	1987	1988	1989	1990	1991
	(1)	(2)	(3)	(4)	(5)
ASSETS					
Cash	11.8	8.1	-6.8	8.8	11.6
Govt. Sec.	-14.7	-41.7	99.8	13.9	17.1
Loans	-18	10.8	10.5	-1.5	9.8
Other Assets	43.7	7.1	-86.7	10.3	24.2
Total Assets	19.4	8.56	-2.7	6.4	16.6
LIABILITIES					
Borrowings	-56.3	6.2	-14.1	-36.4	-9.5
Demand Deposits	28.2	15.7	11.5	8.4	19.9
Sav. and Time Dep.	26.4	19.5	11.6	9.4	11.4
Other Liabilities	39.3	-7.2	-51.9	16.6	19.5
Total Liabilities	17	8.3	-5.99	5.92	14.1

Source: Table I-38.

Table I-45 **Percentage Changes in Assets and Liabilities for the GCDB, 1987-1991.**

Year	1987	1988	1989	1990	1991
	(1)	(2)	(3)	(4)	(5)
ASSETS					
Cash	-28.2	-6	-20.6	37.4	0
Govt. Sec.	0	0	96.3	69.9	-10.9
Loans	-26.4	15.9	4.9	-7.1	1.7
Other Assets	69.4	-10.1	-40	17.1	16.9
Total Assets	22.8	4.1	-9.7	6.5	7.9
LIABILITIES					
Borrowings	-56.3	6.2	-14.1	-36.4	-9.5
Demand Deposits	30.7	2.9	-0.2	1.5	-7.0
Sav. and Time Dep.	18	22.4	11.2	4.2	1.1
Other Liabilities	70.7	-10.7	-49.1	23.9	17.9
Total Liabilities	19.7	4.7	-12.6	2.4	4.9

Source: Table I-39.

Table I-46 Percentage Changes in Assets and Liabilities for All Other Commercial Banks.

Year	1987	1988	1989	1990	1991
	(1)	(2)	(3)	(4)	(5)
ASSETS					
Cash	26.9	12.5	-3.2	-3.9	15.9
Govt. Sec.	-31.3	-166.7	99.9	6.7	19.7
Loans	11.7	-13.2	29.9	13.8	26.8
Other Assets	13.7	21.4	-159	-2.7	35.1
Total Assets	13.6	15.2	6.2	5.7	26.1
LIABILITIES					
Borrowings	na	na	na	na	na
Demand Deposits	26.9	21.2	15.7	10.7	26
Sav. and Time Dep.	35.3	16.2	12.3	14.7	19.8
Other Liabilities	-33.8	-0.02	-58.5	-6.2	24.2
Total Liabilities	12.3	13.9	2.9	10.2	23.2

Source: Table I-40.

Table I-47 **Profit and Loss Statement for Commercial Banks in The Gambia (thousands of current dalasis).**

1. All Comm. Banks	1988	1989	1990
	(1)	(2)	(3)
Interest Received	37,925	47,153	48,060
Interest Expenses	29,786	29,971	30,722
Gross Return	8,139	17,182	17,338
For. Exch. Income	21,013	23,146	26,625
Other Income	13,116	11,666	14,522
Govt. Security Income	14,243	18,181	22,778
Total Income	56,511	70,175	81,263
Operating Exp.	28,590	33,420	29,726
Profit/Loss	27,921	36,755	51,537
2. GCDB	**1988**	**1989**	**1990**
	(4)	(5)	(6)
Interest Received	27,332	34,425	33,705
Interest Expenses	19,897	20,038	19,628
Gross Return	7,435	14,387	14,077
For. Exch. Income	5,723	5,738	5,702
Other Income	4,832	2,727	4,427
Govt. Security Income	0	0	2,079
Total Income	17,990	22,852	26,285
Operating Exp.	15,795	18,784	9,891
Profit/Loss	2,195	4,068	16,394
3. All other banks	**1988**	**1989**	**1990**
	(7)	(8)	(9)
Interest Received	10,593	12,728	14,335
Interest Expenses	9,889	9,933	11,094
Gross Return	704	2,795	3,241
For. Exch. Income	15,290	17,408	20,923
Other Income	8,284	8,939	10,095
Govt. Security Income	14,243	18,181	20,699
Total Income	38,521	47,323	54,958
Operating Exp.	12,795	14,636	19,835
Profit/Loss	25,726	32,687	35,123

Source: Data provided by Gambian authorities.

Table I-48 Performance Indicators of the Commercial Banking Sector in The Gambia.

1. All Commercial Banks	1988	1989	1990
	(1)	(2)	(3)
Gross Margin % of Loans	3.4	6.6	6.7
Oper. Exp. % of Assets	4.8	5.8	4.8
Profit % of Assets (rate of return on assets)	4.8	6.5	8.6
Profit % of Net Worth (rate of return on equity)	60.7	59.9	77.2
Net Worth % of Assets	7.8	10.6	10.9
Total Liabilities/Total Assets	0.9	0.9	0.9
Total Liabilities/Net Worth	11.8	8.4	8.1
Long Term Liab/Long Term Liab + Net Worth	0.8	0.8	0.8
Other Income as a % of Profit[1]	173.2	144.0	124.0
Profit as a % of Assets (excluding other income)[1]	-3.4	-2.8	-2.0
2. GCDB	**1988**	**1989**	**1990**
	(4)	(5)	(6)
Gross Margin % of Loans	3.8	7.0	7.5
Oper. Exp. % of Assets	4.5	5.8	2.9
Profit % of Assets (rate of return on assets)	0.6	1.3	4.8
Profit % of Net Worth (rate of return on equity)	10.3	14.8	38.5
Net Worth % of Assets	6.0	8.5	12.4
Total Liabilities/Total Assets	0.9	0.9	0.9
Total Liabilities/Net Worth	15.6	10.7	7.1
Long Term Liab/Long Term Liab + Net Worth	0.8	0.8	0.7
Other Income as a % of Profit[1]	480.8	208.1	74.5
Profit as a % of Assets (excluding other income)[1]	-2.4	-1.3	1.2
3. All Other Banks	**1988**	**1989**	**1990**
	(7)	(8)	(9)
Gross Margin % of Loans	1.7	4.8	8.8
Oper. Exp. % of Assets	5.4	5.8	7.3
Profit % of Assets (rate of return on assets)	11.2	13.3	13.3
Profit % of Net Worth (rate of return on equity)	101.0	96.4	134.0
Net Worth % of Assets	10.7	13.4	9.6
Total Liabilities/Total Assets	0.9	0.9	0.9
Total Liabilities/Net Worth	8.3	6.5	9.3
Long Term Liab/Long Term Liab + Net Worth	0.8	0.7	0.8
Other Income as a % of Profit[1]	147.0	136.0	147.0
Profit as a % of Assets (excluding other income)[1]	-5.1	-4.7	-6.1

Source: Derived from data recorded in Table I-38, I-39, I-40, and I-47.

Note 1: Other income is income earned from foreign exchange transactions, government securities and other non-loan assets.

Table I-49 Rate of Return on Loan and Non-Loan Assets for the Banking System of The Gambia, 1988-1990.

A. All Commercial Banks	1988	1989	1990
	(1)	(2)	(3)
1. Return on Loan Assets[1]	-1.39	4.34	6.15
2. Return on Non-Loan Assets[1]	8.96	8.33	10.43
3. Return on Total Assets	4.81	6.49	8.55
B. GCDB	**1988**	**1989**	**1990**
1. Return on Loan Assets	-0.60	1.49	5.39
2. Return on Non-Loan Assets	2.16	0.90	4.10
3. Return on Total Assets	0.60	1.27	4.81
C. Other Commercial Banks	**1988**	**1989**	**1990**
1. Return on Loan Assets	-3.89	10.25	7.89
2. Return on Non-Loan Assets	14.42	14.22	15.18
3. Return on Total Assets	11.18	13.29	13.32

Source: Same as Table I-48. Asset information drawn from Tables I-38, I-39, and I-40. Income and expense data from Table I-47.

Note 1: The rate of return on loan and non-loan assets is estimated as follows: Interest and operating expenses are allocated to loan and non-loan activity according to the relative share of loan and non-loan assets (excl. cash) in total assets. The profit/loss from loans equals interest received minus the appropriate relative weight of interest and operating expenses. The profit/loss for non-loan assets equals foreign exchange income plus government security income plus other income minus share of interest expense (based on share of government securities to loans) and operating expenses. The rate of return on loan assets equals the profit/loss on loans divided by value of loan assets. The rate of return on non-loan assets equals the profit/loss on non-loan assets divided by value of total assets minus loan assets and cash. The rate of return on total assets equals the profit/loss on both loan and non-loan activity divided by the value of total assets minus cash.

Table I-50 Income and Expense Statement of the GCDB, 1981 to 1991 (in 1000 of current dalasis).

A. Income (in D'000)	1981	1984	1985	1986	1987	1989	1990	1991
	(1)	(2)	(3)	(4)	(5)	(6)	(7)	(8)
Interest Income	10831	13323	14862	21354	27181	34521	37430	41060
Foreign Exchange Transactions	(1865)	713	(1817)	590	4300	5950	5922	9324
Commission & Other	2715	2203	2570	1146	2221	2419	3144	
Total	11,681	16,239	15,615	23,090	33,702	42,890	46,496	50,384
B. Expenditure								
Interest Expenses	6814	14733	14865	18311	21497	20038	20298	17756
Administrative Costs	1173	2060	2038	2282	3194	4490		
Other Expenses	2495	1286	1393	1824	2277	2829	9888	11508
Provisions - Bad Debts	770	15732	10875	2785	2785	9954	27030	104068
- Other Losses	-	-	1986	8480	1109	160	559	-
Depreciation	289	401	762	787	1343	1351	538	2220
Total	11,541	34,212	31,919	34,469	32,205	38,822	58,313	135,552
Profit (loss) before tax	140	(17,973)	(16,304)	(11,379)	1,497	4,068	(11,817)	(85,168)
Taxation	-	325	620	396	1214	2034	1398	1512
Profit (loss) after tax	140	(18,298)	(16,924)	(11,775)	283	2,034	(13,215)	(85,184)
Accumulated losses brought forward	91	1942	20240	37164	48939	47581	45547	57578
Accumulated losses carried forward	49	(20,240)	(37,164)	(48,939)	(48,656)	(45,547)	(58,762)	(142,762)

Source: GCDB files.
Note: For 1981, "Accumulated Losses" refers to the amount transferred to the "Reserve Account."

Table I-51 Balance Sheet and Related Accounts of the GCDB, 1981 to 1991 (in 1000 of current dalasis).

A. ASSETS (D'000)	1981	1984	1985	1986	1987	1989	1990	1991	1992
	(1)	(2)	(3)	(4)	(5)	(6)	(7)	(8)	(9)
Cash & Deposits	7279	4050	11469	10166	15777	6987	36494	33883	
Balance with Foreign Banks	1151	25148	8103	7509	17248	1695	4535	1543	24660
Investments	250	130	130	130	-	-	-	-	-
Bills purchased & discounted for NUC	5093	13005	7592	4645	5480	4857	-	-	-
Commercial Loans	97122	90726	104322	129313	103311	154895	112225	65769	54156
Development Loans	22332	30340	31213	36803	28574	34309	22820	1951	4955
Other Assets	5411	3245	8879	1021	2488	3264	4963	2114	5638
Fixed Assets	1224	9305	8454	19355	18323	19006	47129	45036	44034
B. LIABILITIES									
Customers' Deposits	22841	40002	59178	77173	106020	127647	139204	144074	132005
Other Liabilities	9219	15779	14731	15529	20223	21793	23946	26748	27125
Amount due Central Bank	76927	93402	70581	74403	23920	36497	18920	18920	18920
Banks outside The Gambia	11940	23515	11167	15212	10231	5693	2374	1379	-
Development Banks	12510	12510	12010	10210	9259	7259	133	133	133
Quasi Equity	-	-	35000	35000	35000	35000	30400	30400	30400
Other Borrowed Funds	2290	5901	7679	5060	8380	8847	5305	4918	4104
Share Capital	1000	2000	5000	11070	13600	13600	23200	23200	23200
Reserves, gen. prov. & Retained earnings	3129	(17160)	(34084)	(54715)	(34432)	(31323)	(13316)	(99476)	(102444)
C. MEMORANDUM ITEMS									
Bills purchased & discounted for NUC									
Gross			10862	7914	7910	7287	2661	2661	2661
Cumulative provisions			3270	3269	2430	2430	2661	2661	2661
Commercial loans									
Gross			122486	149744	126107	183952	159835	209754	215549
Cumulative provisions			18164	20431	22796	29057	47610	143985	161393
Development Loans									
Gross			39492	45597	38627	54722	51708	37418	38001
Cumulative provisions			8279	8794	10053	20413	28888	35617	33194

Source: GCDB files.

CHAPTER TWO

ALTERNATIVE FINANCIAL NETWORKS IN THE GAMBIA: THE NON-GOVERNMENTAL ORGANIZATIONS

by

Geetha Nagarajan

Douglas H. Graham

and

Richard L. Meyer

Table of Contents

I. INTRODUCTION 1

II. METHODOLOGY OF STUDY 3

III. KEY CHARACTERISTICS OF THE SAMPLE NGOs 5

IV. FINANCIAL SERVICES PROVIDED BY THE SAMPLE NGOs 6

1. Issues in NGO Loan Programs 6
   - A. Funding 6
   - B. Loan Services 7
   - C. Subsidized Lending and Repayment Issues 7
   - D. Segmented Markets 8
   - E. Major Design Problems 9

2. Savings: Deposit Mobilization 11

V. REGULATING AND COORDINATING AGENCIES 13

1. Central Bank of The Gambia (CBG) 14

2. The Association of NGOs (TANGO) 15

3. GVDTF/UNDP 16

4. WID/WWB 17

5. Summary 17

VI. RECOMMENDATIONS FOR REGULATORY CRITERIA AND OPERATIONAL GUIDELINES FOR NGOs 18

1. Introduction 18

2. Regulatory and Supervisory Roles for the CBG and TANGO 19
   - A. Registration 20
   - B. Statement of Operational Plans 20
   - C. Reporting Requirements 21
   - D. Portfolio Composition 21
   - E. Minimum Prudential Reserves 21

99

3. Operational Guidelines for NGOs 22
A. Source of Funding: External vs. Domestic 22
B. Member Education Programs 23
C. Portfolio Diversification and Program Risks 23
D. Scope Economies 23
E. Minimum Prudential Reserves 24
F. Minimum Prudential Rules on Penalties for Default/Delinquency 24
G. Positive Real Interest Rates for Loans and Deposits 24
H. Minimum Uniform Bookkeeping Practices and Quarterly Reports 25
I. Linkages with Formal Institutions 25
J. The Graduation Syndrome 25

4. Summary 26

REFERENCES 27

List of Tables

Table II-1 Roster of NGOs Offering Financial Services in The Gambia. 29
Table II-2 Volume of Direct Agricultural Loans by Various Sources, 1991-92. ... 30
Table II-3 The Sample of NGOs, Associated Organizations and Beneficiaries Participating in the Study. 31
Table II-4.1 Operational Philosophies of Sample NGOs Offering Financial Services in The Gambia. 32
Table II-4.2 General Characteristics of Sample NGOs by Selected Criteria of Activity, Sponsorship, Size, Location, Membership and Financial Services. 33
Table II-5 Financial Services Offered by NGOs: Loans. 35
Table II-6 Financial Services Offered by NGOs: Savings Mobilization. 37
Table II-7 NGO Financial Activities: Strengths and Weaknesses. 38

List of Appendices

Appendix II-1 List of NGOs in The Gambia 41
Appendix II-2 The Gambia Village Development Trust Fund (GVDTF) (The Fund) 46

100

LIST OF ACRONYMS USED IN CHAPTER TWO

ACCNO	Advisory Committee for the Coordination of NGOs
ACU	Agricultural Credit Unit of the Central Bank
CBG	The Central Bank of the Gambia
ERP	Economic Recovery Program
FIA	Financial Institutions Act
GCDB	Gambia Commercial and Development Bank
GVDTF/UNDP	The Gambia Village Development Trust Fund sponsored by United Nations Development Programs
NGOs	Non-governmental organizations
TANGO	The Association of Non-Governmental Organizations
VISACAs	Village Savings and Credit Associations
WID/WWB	The Women in Development Organization of the Women's World Bank

See Appendix Table II-1 for a roster of the NGOs discussed in this report and their associated acronyms.

101

CHAPTER TWO
ALTERNATIVE FINANCIAL NETWORKS IN THE GAMBIA: THE NON-GOVERNMENTAL ORGANIZATIONS*

I. INTRODUCTION

Non-governmental organizations (NGOs) have been active in The Gambia since its independence in community development efforts covering health, education, agricultural research and extension activities. In the eighties, however, with the decline of some sources of formal financial services in rural areas, several NGOs began operating as alternative financial networks for rural clientele.

NGOs generally grow most rapidly in a liberalized economy and in a democratic policy environment (Diamond et al, 1988).[1] The emergence of NGOs as an alternative financial network is in part the result of a liberal policy environment introduced by the Economic Recovery Program (ERP). The ERP gradually eliminated the supply of subsidized financial services through government channels. These measures encouraged NGOs and private entrepreneurs to enter these markets and offer financial services.

NGOs have effectively demonstrated their capacity in the past to expand the supply of community services available in poor communities. Consequently, there was growing enthusiasm among international donors to develop NGOs to assume additional responsibility as channels to supply financial services for low income clientele. The NGOs' operational strategy emphasizing village level participation was seen to offer a comparative advantage for these organizations to increase access to cost efficient financial services through reduced risk and information costs.[2] Furthermore, it was expected that the implementation of credit and savings programs in combination with other developmental activities would accelerate income generating activities in NGO service areas.

---

* We acknowledge with sincere appreciation the valuable help extended by Pirkko Poutiainen, UNDP; Balla Silla, UNDP; Kofi Agyekumhere, CBG; Mariama Ashcroft, GWFA; Brooks Crichlow, CRS; Dodou Darbo, AFET; Burang Goree-Ndiaye, TANGO; Helmi Govers, TANGO; Musa Jawneh, AFET; Maria tou Loum, WISDOM; Jean-François LeGrand, VISACA; Nimal Martinus, WVI; Aminatta N'Gum, GWFA; Solomon Owens, CRS; Samoo, GWFA; Jeffrey Saussier, AATG; Aboubacry Tall, SCF/USA; and Gladwin Williams, TANGO in conducting this study. The usual disclaimers apply.

[1] See Diamond, Linz and Lipset.

[2] The lending risks due to incomplete information about the capacity, creditworthiness and character of borrowers can be reduced through close lender rapport with the clientele. Therefore, transaction costs are reduced due to better borrower screening, etc.

Of the one hundred or so international and national NGOs in The Gambia, 14 were found to provide financial services (largely in rural areas) to farm and non-farm clientele along with formal and informal financial institutions in The Gambia (see Table II-1). The entry of the NGOs into the financial markets has increased the number of alternative financial sources that service these markets, and the volume of loans supplied and savings mobilized by them are significant. This can be seen in Table II-2 where the share of NGOs in total agricultural loans disbursed in The Gambia in 1991-92 reached approximately 18 percent. The increased importance of NGOs in the agricultural credit market in recent years was due in part to the collapse of the Gambia Commercial and Development Bank (GCDB) in the late 1980s, and the reluctance of commercial banks to make agricultural loans.[3]

The savings and lending activities undertaken by the NGOs, however, represent only one of their several activities, and often account for only a small part of their total program.[4] In general, the NGOs are embryonic financial institutions usually offering rudimentary financial services to targeted populations in limited geographic areas. The segmented markets in which they operate lack broad national penetration. The diverse operational philosophies of the various NGOs have often resulted in heterogenous financial technologies that send mixed market signals and create market segmentation.[5] Furthermore, inadequate regulatory guidelines in the country have led to a lack of coordination among the various NGOs. This tends to create a concentration of several NGOs within the same geographic areas leading to negative spill-over effects and an inefficient use of NGO resources.[6]

Despite the continuing issues involved in using NGOs as an alternative financial network, international donors are increasingly encouraging NGOs to include a financial component in their community oriented activities. Therefore, there is an urgent need to

---

[3] Consult Chapter I in this report for further details on the role of formal financial institutions in the agricultural sector.

[4] For example, credit activities represent only 5% of the total budgetary allocation of Action Aid in The Gambia (AATG).

[5] Financial technology refers to the operational practices and procedures followed by the financial intermediary in supplying financial services. For example, the loans offered, the terms and conditions of a credit contract -- interest rate, penalty costs for default, etc. -- constitute the financial technology. The heterogeneity in financial technology arises due to variations in operational procedures and practices followed by different types of financial intermediaries.

[6] Spill-over effects arise when activities of one NGO affect the activities of another. The spill-over can either be positive or negative in nature. While positive spill-over effects augment activities of several NGOs, a negative spill-over effect hampers them. An example of a negative spill-over effect is as follows. Consider the loan activities of two NGOs in the same geographic area. Assume that NGO-1 offers zero interest loans (because of subsidies) while NGO-2 charges market rates. This leads to an excess loan demand for NGO-1 loans compared to NGO-2 loans, and market confusion regarding quality of loans. In time, NGO-2 loan activity disappears altogether as cheap money drives out dear money. The subsidized NGO has driven the market oriented NGO out of business.

assess the feasibility of NGOs becoming a viable alternative financial network in the country. The efficiency, viability and sustainability of financial programs implemented by NGOs need to be examined.[7] Although there is still incomplete information about the operational practices of various NGOs involved in financial markets, this section attempts to document the philosophies behind their operation and identifies the financial technologies employed. A discussion of the functions of existing regulatory and coordinating institutions will follow. Documenting and discussing the current status of NGO financial programs and regulatory mechanisms will help in assessing the involvement of NGOs in financial markets. Finally, regulatory and operational guidelines will be suggested to facilitate the development of NGOs as viable alternative financial intermediaries without destroying their comparative advantage as grass root organizations.

II. METHODOLOGY OF STUDY

There is no clear cut definition of an NGO.[8] The NGOs, for this study, are defined as structurally and functionally unrelated private organizations that pursue activities to reduce poverty and promote the interests of the poor, protect the environment and undertake community development activities (Brown and Korten).

The private nature of NGOs often limits the dissemination of information about their activities to restricted users. While the NGOs should have a fiduciary responsibility to disseminate information to the public, especially about their credit and savings activities, this information is considered sensitive and often confined to their parent donors. Therefore, complete documentation about the nature and type of financial services offered by NGOs in the Gambia is not available. Even a consultant hired recently by the Association of Non-Governmental Organizations (TANGO) to document and evaluate the savings and loan activities of NGOs in The Gambia complained that information was limited in scope and coverage and difficult to secure. Moreover, whenever information was made available, he was constrained to maintain the confidentiality of it other than discussing broad generalities. This clearly compromises any serious effort to address important public policy issues in the area of NGO financial intermediation. One notable exception to this inadequate information base was the VISACAs, the unclassified non-governmental organization that shared its ample data base with the OSU research team (see Chapter V). With this one

[7] The limited information that is available has restricted the evaluation of the economic efficiency of several NGO programs. While economic efficiency should not be the only criteria used in evaluating them, information on the role of NGOs in satisfying equity goals is equally limited.

[8] NGOs are often defined as residual non-profit organizations that emerge as a private response to market failure to offer public or private goods. They are viewed as alternative forms of organization that are remedies for market failure that occur due to nonparticipation in the market of a large segment of the population who lack basic purchasing power (See Brown and Korten).

important exception, the amount of information available was limited and not adequate to fully evaluate the performance of NGO credit and savings activities. The dearth of studies about NGO activities underscores the difficulty of gathering information through conventional data collection techniques. Therefore, this study followed an informal approach to data collection. Although the information obtained was limited, the analysis is useful in evaluating the role of NGOs in providing financial services in The Gambia.

The current list of NGOs reported to be operating in The Gambia totals 108: 52 international, 55 national and 1 unclassified.[9] Of this 108, 14 national and international NGOs were reported to provide financial services, i.e., loans and savings (see Table II-1). Since the objective of this study is to assess the feasibility of NGOs as alternative financial networks, especially for rural areas, the sample was confined to only those 14 NGOs that have a financial component. While 14 NGOs provide financial services, the sample was restricted for logistical reasons to ten NGOs, four international, five national and one unclassified NGO.[10] In addition, four coordinating and regulatory agencies, and three beneficiary groups were also included in the sample. The list of the institutions that participated in the study are provided in Table II-3. Representatives of the sample participants were interviewed using open ended and unstructured questionnaires. A rapid appraisal technique was used during the limited visits to three of the NGO project areas to assess their loans and savings programs. Consultant and annual reports (when available) were also consulted in addition to the interviews but generally they carried limited information.

Assessing NGO performance is difficult without taking into consideration their multifaceted social objectives. However, incorporation of social objectives often leads to compromises of efficiency conditions. Furthermore, comparing the operational procedures and practices of heterogenous NGOs following diverse financial technologies is difficult. The difficulties are further aggravated by the absence of quality data. This study is no exception and data problems could not be avoided. The data limitations, however, did not seem to be any more difficult than those encountered in the study of NGOs in other developing countries.

---

[9] See Appendix 1 for a list of NGOs in the Gambia.

[10] The NGOs in this study are classified either as international or national organizations according to the definition used by the recently established national coordination unit for NGOs in The Gambia, TANGO (The Association of Non-Governmental Organizations). The VISACAs as discussed in Chapter V are defined as unclassified because they are associated with the government Jahally Pacharr Rice Project. The VISACAs are not members of TANGO and are not attached to the Gambia Village Development Trust Fund (GVDTF) that benefits national NGOs. However, the VISACAs are included in this study due to the NGO nature of its parent donors in France and Germany.

105

III. KEY CHARACTERISTICS OF THE SAMPLE NGOs

The operational philosophies and general characteristics of the sample NGOs are presented in Tables IV-1 and IV-2. While international NGOs have been involved in developmental activities for a long time, national NGOs became active only in the late 1980s. Active participation by national NGOs was in part influenced by the growing economic liberalization in The Gambia that in turn generated a large flow of funds from international organizations/donors such as the World Bank, UNDP, and USAID and parent NGOs.[11] Some donors prefer to link up with local NGOs rather than directly involve themselves in developmental activities. The funds are frequently directed by these international organizations through national NGOs in order to stimulate local participation in community developmental activities. The increased participation by national NGOs, who have a comparative advantage in interacting with local clientele groups, is expected to increase the efficiency of resource in addition to creating community wide responsibility that is essential for the long-run sustainability of programs.

The activities of the sampled NGOs have a strong orientation toward human capital development, the strengthening of village level infrastructure facilities and institution building. Since NGOs are multifunctional and represent at most only embryonic financial intermediaries, financial services are generally considered of secondary importance. Only the VISACAs specialize in financial intermediation.

The majority of the sample, nearly 60 percent of the NGOs, target their community services to women, both individuals and kafos. In general, village level indigenous groups like kafos and osusus are frequently used as conduits to supply community services to final beneficiaries.[12] The use of kafos and osusus is expected to increase village level participation in community activities and avoid free rider problems inherent in the provision of public goods.

---

[11] It has also been reported that several NGOs were organized by government employees furloughed as part of the Economic Recovery Program. Economic liberalization also reduced the credit flows to rural Gambia through the Gambia Cooperative Union thereby leaving rural finance largely in the hands of NGO activity.

[12] Kafos are informal but strong and cohesive village groups that are multifunctional in nature. These groups are homogenous in terms of members' age, ethnicity, heritage, gender and occupation but have various membership sizes. In general, members of farmer kafos cultivate a common plot of groundnut, cereals or vegetables and contribute the sale proceeds to a common village fund. This village fund functions as an insurance substitute to primarily mitigate village level contingencies and member contingencies to a lesser extent. Some kafos also undertake savings and credit activities on an organized basis. On the other hand, osusus resemble ROSCAS in their operational style, and are smaller in size compared to kafos. The osusus are commonly observed in urban areas rather than in rural areas.

106

NGO developmental activities are usually concentrated in limited geographic areas like MID-S and LRD that are well developed compared to URD and NBD.[13] Furthermore, of the 7 sample NGOs who target women entrepreneurs, 3 function around Banjul underscoring the concentration of NGO activities in this peri-urban area. In general, NGO developmental activities lack national penetration and are clustered around small growth poles. Although there is an overlap in service areas among various NGOs, there is no documented evidence on the extent of overlap in terms of beneficiaries. Random interviews conducted for this study with villagers in Kwinella and Yaminkunda, beneficiaries of AATG, confirmed the above statement. However, spill-over effects are observed from various developmental programs initiated by the same or different NGOs who operate in the same area.[14]

IV. FINANCIAL SERVICES PROVIDED BY THE SAMPLE NGOs

The inclusion of a financial component in NGO programs is a recent phenomenon (see Tables II-5 and II-6). The interest of international donors in the late 1980s to find non-governmental solutions to mitigate government and market failures in financial markets led to the proliferation of NGOs as rudimentary financial intermediaries. The introduction of diverse NGO philosophies into rural financial markets increased the heterogeneity of operational practices and contract terms and conditions that has led to distortions in the functioning of rural financial markets. This section explores this issue by examining the savings and lending programs initiated by the sample NGOs in The Gambia.

1. Issues in NGO Loan Programs

A. Funding

The details about the loan programs implemented by the sampled NGOs is presented in Table II-5. The majority of loan programs, especially by national NGOs, were started in the late 1980s. Among the 10 NGOs, 7 have established loan programs while 2 (WVI, GRUDA) intend to begin in 1993. In general, the loan programs of all NGOs, except the VISACAs, rely on external funds/grants, and the initial funds are used to form a revolving fund for subsequent loan operations. Of late, however, an increased level of local

[13] MID-S: MaCarthy Island Division-South; LRD: Lower River Division; URD: Upper River Division; NBD: North Bank Division.

[14] For instance, the majority of beneficiaries from AATG's credit programs were also beneficiaries of its education and health programs; the beneficiaries of the VISACA's credit and savings programs often benefit from AATG's education and health programs.

participation is observed through savings mobilization and membership fees. Whereas the majority of the loan programs are launched individually, there is a limited degree of collaboration between NGOs to reduce costs and realize economies of specialization.[15] The affiliation with local institutions such as the Central Bank of the Gambia and Standard Chartered Bank is, however, confined to a few selected national NGOs on a pilot basis.

B. Loan Services

In general, there is a strong bias toward short and medium term production loans.[16] Even though loans are fungible, the international NGOs supply loans in kind like fertilizer, seeds and agricultural implements (e.g. AATG) while national NGOs in contrast provide cash loans. The majority of NGOs provide group rather than individual loans.[17] While borrowing groups are often formed out of existing informal groups like kafos and osusus, some NGOs also facilitate the formation of new groups to channel their financial services. Although not all loan programs are gender specific, three of the NGOs exclusively target women beneficiaries.

Little information exists on the volume, coverage, costs of operation and terms and conditions of loan contracts offered by the sample NGOs.[18] However, the available information about loan operations suggests that the coverage is concentrated in just a few geographic locations. Moreover, the terms and conditions of loans are ambiguous reflecting the dominance of social over commercial objectives.[19] In short, the terms and conditions observed among NGO loan programs are heterogenous, highlighting their diverse operational philosophies.

C. Subsidized Lending and Repayment Issues

The majority of NGOs still operate under the assumption that income generating activities of the rural poor require the provision of subsidized loans. Despite the widespread documentation of the failure of subsidized loan programs in developing countries,[20] NGOs

---

[15] For instance, CRS, an international NGO, collaborates with 2 national NGOs, AFET and GWFA, to provide financial services instead of initiating its own credit program.

[16] GRUDA, a national NGO, intends to provide short-term consumption loans beginning in 1993.

[17] In the sample, 55% of the NGOs provide group loans, 11% provide individual loans and 34% provide both individual and group loans.

[18] The exceptions are the VISACAs and AATG that maintain fairly good data on their loan portfolios and share it with interested outsiders. See Chapter V for a detailed analysis of the VISACAs.

[19] Indeed, their social objectives often introduce market distortions through subsidized lending rates.

[20] See Adams, Graham and Von Pischke for details.

believe they have a comparative advantage over formal financial institutions in efficiently supplying subsidized loans to achieve social objectives. NGOs assume their limited coverage and close links with the local community reduces information problems about their clients creditworthiness therefore leading to well monitored targeted loans. While the NGOs have discontinued giving funds as grants, the majority of their loans are often issued at below market rates. Interest rates, except in the VISACAs, range from 0 to 24 percent per annum based on the objectives of the parent NGO that provides the operational funds. Although the costs of lending are rarely documented, informants uniformly stated that they are high and often exceed the explicit interest rate charged. Since the rural poor often lack tangible collateral, the majority of programs use collateral substitutes like group liability, third party guarantors and social sanctions. Only three NGOs, WISDOM, SCF/USA and AFET, link savings with loans as a form of implicit collateral. While most NGOs have access to social and legal systems to enforce contracts, they seldom impose stiff penalties for nonrepayment.[21]

Documentation about repayment performance in NGO loan programs is rare and often incomplete. While the repayment performance observed for international NGOs is disappointing, the relatively high repayment performance reported by national NGOs is due in large part to the small number of loans issued and their more cautious approach to lending and the linking of loans with savings. The high repayment performance documented in the VISACAs, despite high explicit interest rates, is an intriguing contrast to the other NGOs. This is due in part to a carefully planned design that includes the right incentives and strict penalties (see Chapter V).

D. Segmented Markets

Loan programs were generally confined to limited geographic areas. While the international NGOs covered a larger area and a larger number of beneficiaries, the national NGOs limited themselves to areas around Banjul or a few villages. The differences in coverage can be attributed to the high capital costs and manpower required to implement loan programs. In general, all NGO loan programs lack national coverage. This narrow geographic focus imposes an additional risk for them because of the covariance of risk inherent in portfolios dominated by borrowers subject to similar risks and income variations that is particularly characteristic of agriculture. This problem jeopardizes program sustainability.[22] In the absence of contingent markets and portfolio diversification by lenders in terms of enterprises, geographic diversification mitigates lending risks. Hence, the lack of any substantial geographic network places Gambian NGOs at some risk in their correlated and undiversified loan activities.

---

[21] Save the Children (STC) reported using legal protection to recover a loan, while AATG rescheduled earlier loans and refused fresh loans in 1992 to villages that did not repay 95% of the rescheduled loans.

[22] For example, the covariance of risk arises when a natural calamity causes all borrowers to default at the same time.

104

E. Major Design Problems

NGO loan programs are often designed with broad social objectives and have a strong orientation toward building non-financial community institutions. Furthermore, these programs utilize traditional village structures to reduce costs and increase local participation. Nevertheless, these loan programs have some design flaws and implementation problems. Since financial intermediation is only one of the several activities undertaken by NGOs and the inclusion of a financial component in their activities is relatively recent, they have less experience in financial intermediation. Indeed, some feel uncomfortable in trying to become viable financial intermediaries as they perceive it is a contradiction to their social objectives. It is, therefore, no surprise that NGO loan programs are experimental, less focused and rudimentary in nature. Table II-7 presents the strengths and weaknesses of individual NGO financial programs, and underscores the major issues in design and implementation of these programs.

First, there is dearth of documented information on NGO loan activities, especially with national NGOs. The available information is usually incomplete and mixed in with other developmental activities.[23] While the multifunctional nature of NGOs may allow little flexibility or emphasis on sophisticated accounting procedures for loan programs, NGOs take on a fiduciary responsibility for proper bookkeeping and dissemination of this information when they begin to accept savings deposits from the public. At the very least, the NGOs that collect deposits from the public for on-lending on a more than marginal basis should be expected to produce standard reports on the status of their loan and deposit accounts. Inadequate accounting practices covering their loans and savings activities and the reluctance of NGOs to disseminate this information have limited the coordination and collaboration among NGOs that could reduce costs and possible conflicts. Consequently, there is often an overlap of diverse NGO loan activities in the same concentrated geographic areas resulting in confusion among the villages and the inefficient use of resources.

The lack of coordination or uniformity in operational practices can lead to unhealthy non-market distortions (negative externalities) and possible system collapse in rural areas. For example, one NGO could presume to establish a loan program in a village with low or zero interest rates with its own monies, thereby destroying the institutional viability of another NGO loan program based on locally mobilized deposits paying positive real rates of interest and making loans at appropriately higher rates. The first NGO would make subsidized loans whose rates are not market determined and, in the process, destroy another NGO initiative carefully built up through locally mobilized resources and adhering to market determined rates to achieve financial viability. A subsidized intervention built on the philosophy of the mere transfer of cheap resources to the rural communities drives out a

[23] Often a single entry bookkeeping system is used by the NGOs. While their limited coverage allows them to use simple methods, the accounting systems need to be improved in the long-run when they reach a wider coverage. AATG is streamlining its credit accounts through a double entry bookkeeping system by affiliating with an accounting firm in London.

market determined attempt to achieve institutional viability. This example illustrates a variant of Gresham's law where bad (cheap) money drives out good (dear) money.

Second, the majority of NGO loan programs are designed to capture donor funding. Furthermore, they are based on dubious assumptions regarding the role of loans in income generation activities. Loan programs are conceived as short-term solutions to development problems. The commercial nature of financial activities are presumed to conflict with social objectives that are oriented towards increasing access to resources for the rural poor. The rural poor are assumed to be unable to improve or diversify their income generating activities with high interest rates and strict collateral requirements. Therefore, loan programs are often subsidized by parent donors. The cost of lending operations are reported to be high and not covered by prevailing interest rates. However, the high operational costs of loan programs are not transparent due to hidden subsidies in terms of overhead costs that are often intertwined with their other developmental activities. While the subsidies benefit the rural poor who have access to NGO loans, they also discourage loan discipline among the rural poor. Often the subsidized loans are perceived by the beneficiaries as grants that need not be repaid. This has affected NGO loan operations in two ways: (i) in the event that NGOs intend to gradually pass on the responsibility of managing loan programs to rural communities, the use of subsidies erodes the viability and sustainability of these programs without the continuous infusion of donor resources, and (ii) with negative and fixed real interest rates due to growing inflation and poor loan recovery, the revolving funds formed with the initial grants revolve less frequently. In the extreme case they revolve only once and disappear altogether. In addition, the wide variation in subsidized interest rates charged by several NGOs introduces short-run negative externalities as one program erodes the base of other programs eventually leading to market failure.[24]

Third, less rigorous screening techniques to select borrowers and less stringent penalties for default and delinquency have resulted in low repayment rates for a number of NGOs. Those that have reported high repayment rates, however, had fewer loans and followed a very cautious lending approach. Furthermore, penalty conditions for lax loan repayment vary among the NGOs creating confusion and incentives for poor recovery.

Fourth, while NGOs finance a wide variety of income generating activities ranging from microenterprises to farming, their strong bias towards the provision of production loans and discouragement of consumption loans ignores the fungible nature of credit, i.e., credit can be diverted to other uses. More importantly, the availability of consumption credit can create a form of insurance for low income families to smooth out their consumption

---

[24] An efficient market establishes prices that offer incentives for production, resource allocation and commodity distribution. It functions based on independent decisions of self-motivated individuals rather than on directions from external agencies, and provides information about relative resource scarcity. Market failure occurs when outcomes of existing markets are not efficient. For instance, interest rate subsidies from external donors create negative externalities in the financial markets through artificial disequilibrium in supply of and demand for financial services, and eventually lead to market failure.

expenses over a season, thereby releasing their own savings (that otherwise would have been used for this purpose) for productive investments. Thus, the supposedly unproductive consumption loans can lead indirectly to increased investment.

Fifth, loan portfolios of individual NGOs are often concentrated in terms of geographic coverage and activities that are subject to high covariance risks. The financial terms and conditions used by NGOs are less developed to mitigate the high risk due to this covariance in income. This problem would jeopardize the long-run survival of the programs.

Sixth, while the majority of NGOs direct loans to groups that are formed spontaneously in local communities, some NGOs prefer forming their own groups. In the absence of adequate information and experience in loan activities based on group dynamics, it is essential that NGOs do not impose new costs on groups or destroy the traditional structures through the formation of new uncohesive loan groups.

Seventh, there is clearly a serious lack of coordination or exchange of relevant information among NGOs. A recent attempt has been made to address this problem through the creation of an umbrella NGO (TANGO) to act as a coordinating unit for the provision of financial services in The Gambia. This horizontal integration could help reduce the cost of operations and realize some economies of scale. However, conflicts of interest that impede the sustainability of the program may arise in the absence of self imposed or external regulations among the NGO community.

2. Savings: Deposit Mobilization

Although information on deposit mobilization is scanty, savings programs, except in the VISACAs, play a less important role in NGOs' financial programs than do loans. The limited role for savings mobilization is due in part to NGO access to risk free external grants from parent donors (the only exception being the VISACAs). At the same time, NGOs are less enthusiastic to mobilize savings for on-lending due to the high risks and costs involved in full scale financial intermediation. The risks are compounded by the lack of insurance to protect savers. Therefore, NGO savings programs are less integrated with their loan activities. They more often function as moneykeepers rather than financial intermediaries.[25]

The available information on individual NGO savings programs are summarized in Table II-6. Currently, the savings instruments observed with NGOs are simple and

[25] Financial intermediaries facilitate the flow of funds from financially surplus units to deficit units. They match several borrowers and lenders by supplying loans from deposits mobilized by them. Moneykeepers, on the other hand, function as mere safekeepers of their depositor's funds. Indeed, the safekeeping is a service offered to business customers, friends and relatives who lack adequate facilities to store surplus funds.

112

rudimentary. International NGOs mobilize deposits on a compulsory basis from loan beneficiary groups to augment their revolving funds from which loans are issued. The interest on compulsory deposits is paid indirectly through the subsidized loan received by beneficiaries. A national NGO, WISDOM, mobilizes savings from women osusus and invests in T-bills to pay market rates to its savers. On the other hand, the VISACAs mobilize deposits from all members and match deposits with loans to offer attractive interest rates to savers. In general, NGOs limit their savings services to a few well developed geographic locations.

Many NGO savings programs have major design problems that impede their ability to efficiently mobilize savings.

First, the ambiguous terms and conditions for savings instruments in the majority of savings programs creates little confidence in the NGOs ability to protect savers. Low or zero interest rates on savings mean that savers are not protected from the inflationary erosion of their savings balances. In addition, forcing savers from local village units to withdraw their savings from a centralized office or bank in Banjul creates delays for emergency withdrawals.[26] Furthermore, in cases where savings are used to issue loans, it is not clear if prudential reserves are maintained to prevent a run on deposits.[27] Indeed, the numerous obstacles for savings withdrawal in these programs acts as a substitute for prudential reserves. Unfortunately, this comes at the expense of savers and reflects little financial management skills in the organization.

Second, there are limited links between NGOs and formal financial institutions. A linkage with formal financial institutions enhances the NGO savings programs in three ways: (i) allows the opportunity for market rates paid by the bank to be passed on to the depositors thereby increasing the protection against inflationary risks, (ii) cultivates a banking discipline among the rural poor who usually shy away from formal financial institutions, and (iii) offers an NGO a place to hold their temporary surpluses thereby enhancing liquidity management during the year. Unfortunately, the problem of limited bank branches in rural Gambia greatly restricts the opportunities for NGOs to benefit from these services.

Third, the compulsory savings programs benefit net borrowers through low interest loans but offers few incentives to net savers in the community.[28] In the absence of

---

[26] The savings are often collected and kept at the central office or deposited in a bank. In cases where the deposits are held in a bank, the NGO often maintains a signatory power over the withdrawal.

[27] There is some evidence on reserves maintained by the VISACAs.

[28] No explicit interest is paid to savers. There is no net benefit for savers unless they can secure a loan at subsidized interest rates. Although the "effective" interest rate on loans increases as a result of the forced savings required to secure a loan, the total effective interest rate in most NGOs is still below the market rate for loans.

attractive savings mechanisms, the considerable potential for rural savings mobilization as demonstrated by the VISACAs is, therefore, left untapped.

Fourth, little emphasis is placed on the 'savings first' approach in the financial programs. Fears are expressed that linking a loan to a proportion of savings may ration out poor borrowers who allegedly lack the potential to save. However, it is not clear if encouraging borrowers to demonstrate their ability to save before they receive a loan will dissuade the rural poor.[29] Indeed, an insignificant savings component undermines local participation in financial programs, unnecessarily creates the image that the program deals only with outside money thereby creating a dole syndrome and, finally weakens the discipline to save. The lack of a strong savings constituency within a financial institution or program weakens careful loan evaluation and loan recovery efforts which quickly emerge when people realize their own savings are involved. Eventually, the soft approach towards savings mobilization may result in domination of net borrowers over net savers and affect the viability of the financial programs without donor support. This becomes all the more important in the event that NGOs decide to phase out grants and gradually turn over their financial programs to rural communities.

Fifth, the information available on deposit mobilization is scanty and incomplete. While some information is confidential, almost all NGOs, except the VISACAs, were unable to provide information on the volume, number of depositors, and terms and conditions of savings accounts. This is due in part to incomplete or nonexistent records, and in part the reluctance of program officers to share information with non-sponsors. In the absence of deposit insurance, any deposit mobilizer has a fiduciary responsibility to protect savers interests by accurate accounting on transactions and disseminating standard balance sheet and income statements to interested parties.

V. REGULATING AND COORDINATING AGENCIES

In the current favorable policy environment, some NGOs effectively fill in the vacuum created by the absence of formal financial institutions in rural areas, and offer rudimentary financial services to the poor in the Gambia. While the entry of NGOs has increased access to financial markets by some of the poor, the number of villages served is quite small. It has also resulted in financial market segmentation. There is an overlap in the financial services offered by several NGOs with diverse terms and conditions in concentrated pockets of activity leading to negative externalities and market confusion. Indeed, while NGOs were perhaps considered an efficient solution to fix government failure

[29] In fact, two VISACAs that encourage their borrowers to save before they borrow have shown a good response. The amount saved is left to the borrower's discretion and is not used as collateral or proportionately linked to credit. However, it is not clear if this is a one time deposit or requires multiple deposits for repeated borrowings, and if this type of savings earns any interest.

in financial markets, their entry has contributed to market distortions. The proliferation of NGOs, each spending resources on uncoordinated programs, importing and operating expensive vehicles, running independent offices, and hiring and training staff appears to provide a poor return to the governments or the private contributors that finance the NGOs.

The market confusions are in part amplified by imperfect and incomplete information on the design, implementation, and performance of various NGO programs. Incomplete information about the diverse financial programs of NGOs is due in part to inadequate regulatory and coordinating institutions for NGO financial activities in The Gambia. The parent donors, who are often foreign based, monitor their financial programs to suit their own operational philosophies. However, with multiple NGOs operating under diverse and sometimes conflicting philosophies, it is difficult without an apex regulatory institution to mitigate the negative externalities of their financial activities. However, existing regulatory agencies do not currently monitor and regulate the activities of NGOs on a systematic basis. Some regulatory and coordinating institutions are essential to streamline the financial activities of the NGOs and to reduce the externalities that lead to market failure. Coordination rather than unhealthy competition and duplication of efforts is essential for the efficient use of resources. Therefore, there is an urgent need for identifying regulatory guidelines and areas for coordination that will benefit the NGOs.

The set of domestic institutions that are supposedly regulating and coordinating the functions of NGOs is comprised of The Central Bank of the Gambia (CBG), The Association of NGOs (TANGO), The Gambia Village Development Trust Fund sponsored by United Nations Development Programs (GVDTF/UNDP), and The Women in Development Organization of the Women's World Bank (WID/WWB). This section briefly discusses each of these institutions and the ambiguous roles they are currently playing in the NGO financial markets of The Gambia.

1. Central Bank of The Gambia (CBG)

The Central Bank of the Gambia was established in 1971 to define, monitor and regulate financial institutions in the Gambia according to the Financial Institutions Act (FIA). With the liberalization of the financial markets in the Economic Recovery Program (ERP) in 1985, the CBG encourages the entry of private and non-governmental agencies into financial markets to provide efficient financial services. Although the CBG has the legal authority to regulate the NGOs, no operational regulations have been formulated towards this end other than the conventional regulation designed to regulate banks.[30] The laissez-faire approach to NGOs has been observed to result in negative externalities in financial markets and increases the potential long-run social costs of market distortions. In

[30] The CBG is currently contributing to the revision of the Financial Institution Act that gives it the legal authority to regulate all forms of financial intermediaries including village level institutions.

the past, the inconsequential role of the NGOs as financial intermediaries very likely led to a lack of interest by the CBG toward regulating these small and scattered organizations. Since the NGOs are becoming increasingly active in financial markets and since their share of lending in financial markets has become more significant, it is time to reconsider this position.

The CBG does conduct regular dialogues with the NGOs to promulgate its policies on interest rates, linking loans to savings, and encouraging coordination among the various NGO financial intermediaries. The recently created Agricultural Credit Unit (ACU) at the CGB, however, has taken actions that go beyond the conventional role of a regulator. The ACU has been assisting the design and promotion of village level financial institutions. The ACU recently reviewed the possibility of assisting in the development of additional savings and credit kafos in the country. Central Bank authorities, however, have resisted any move to engage in these activities on a large scale.[31]

One can understand why the ACU might consider assisting fledgling financial intermediaries in rural areas. There is a natural desire to assume a tutelary role in these situations so that the local efforts avoid mistakes and get started on the right track. However, there is a danger that this role could expand beyond this tutelary stage and clearly become an inappropriate role for the Central Bank. The Central Bank should be primarily a regulatory institution, not a development agency. By engaging directly in the establishment of village based financial intermediaries, a conflict of interest would emerge as the CBG would be expected to regulate an institution it had been responsible in large part for having created in the first place. One could not expect the regulatory agency to operate with complete objectivity in these cases. The CBG should focus its attention on its regulatory role.

2. The Association of NGOs (TANGO)

This association of NGOs was formed in 1983 to provide an umbrella framework in which NGOs can consult, cooperate and collaborate with each other to enhance developmental activities.[32] TANGO assists the intergovernmental body, the advisory

---

[31] The ACU is closely associated with the design and implementation of the village banking program of AFET in Bwiam and Karantaba (see "Report of the Establishment of Savings and Credit Kafos," ACU, 1992). The ACU plans to collaborate with WISDOM, another national NGO, to set up Village Banks designed after the Grameen Bank in Bangladesh, and with the VISACAs on its proposed training complex on rural banking. Reference is made in the ACU memo cited above about future plans to assist in opening a large number of additional savings and credit kafos. However, as we noted in the text, the CBG has resisted any move on these plans.

[32] Of the 108 NGOs operating in the Gambia, 52 NGOs, 30 national and 22 international, are registered as members of TANGO (see Appendix 1 for a list of TANGO members).

committee for the coordination of NGOs (ACCNO), integrates NGO efforts and tries to prevent geographical and sectoral overlaps. To facilitate coordination among the NGOs, TANGO publishes a directory of NGOs in the Gambia, and a quarterly magazine, TANGO TALKS. It coordinates the flow of funds coming from international donors such as the UNDP, USA for Africa and national NGOs. Short-term training sessions are also organized by TANGO to provide technical assistance in rural financial activities. TANGO should be strengthened to carry out its service functions for NGOs in The Gambia. Unfortunately, its staff currently is not sufficient in numbers or training to implement a comprehensive second level federation role as an effective lobby for NGO interests, a forum for NGO dialogue, and a centralized training center to offer a range of services for local NGOs in The Gambia. Much more work is needed to accomplish these objectives. A strong investment in human capital is needed to achieve these ends along with a period of fairly intense external technical assistance and advice.

3. GVDTF/UNDP

This trust fund, worth $325,000, was established by the UNDP in 1991 to support village development groups and national NGOs who promote participatory income generating projects, especially for women and youth.[33] While TANGO functions as a coordinator between the GVDTF, village groups and NGO beneficiaries, the monitoring and evaluation of projects is entrusted to NGOs and government extension workers. It was originally envisioned that the trust fund would be used to support technical assistance and training efforts to launch local NGO savings and credit associations. In part, the trust fund could be channeled to support the training of local NGO staff in TANGO workshops or directly in the field as mentioned above.

More recently, however, there has been talk that the trust fund be used to make loans directly to local NGO associations. As pointed out in the previous discussion on the role of the CBG, this is a dangerous precedent, resurrecting an obsolete and discredited strategy of financial development. In ignoring the more time consuming but necessary path of sustained growth through local savings mobilization (one of the main themes of this report), the channeling of outside trust funds to local NGOs would undermine that effort. More specifically, it could introduce a donor virus among the borrowing clientele weakening loan repayment behavior. In short order, this top-down external funding channel could lead to the collapse of the loan program once borrowers discover that external funds (that carry no meaningful sanction for default) are being used rather than their own mobilized savings. It is hoped that the trust fund board repositions the fund into its original mandate. In the

[33] Recently disseminated guidelines indicate that the GVDTF/UNDP has entered the agricultural loan market by using the trust funds as start up money for local associations (see Appendix II-2). Loan were supplied to support various microentrepreneurial and farming activities in rural areas and loan repayment rates were reported to be satisfactory, however, no evidence is publicly available to confirm this performance.

event they do not, it should be recognized that they have transformed the trust fund into the equivalent of an operating NGO disbursing funds for on-lending. They therefore are undermining efforts to encourage local savings mobilization, placing current depositors savings at risk through injecting a donor virus weakening loan recovery, and potentially introducing negative spillovers into other NGO efforts. In transforming its role into being an NGO, it should be regulated by the CBG and subject to the same guidelines as any other NGO engaged in the supply of financial services.

4. WID/WWB

The WID/WWB is not a domestic regulating or coordinating agency. However, it controls a revolving fund that is targeted toward national NGOs that provide financial services to income generating activities of women. It is currently affiliated with a national NGO, GWFA, to provide loan and savings services to women in 200 villages.[34] While it cannot regulate all NGOs, its access to revolving funds can be tied to selective regulatory requirements.

5. Summary

The GVDTF/UNDP and WID/WB are external funding agencies that have limited potential as coordinators of NGOs who are non-beneficiaries of these trust funds. The Central Bank of the Gambia should play its traditional role of regulating formal financial institutions but there exist very few prudential and fiduciary guidelines that currently regulate NGO financial activities. Whereas TANGO is an umbrella organization that is designed to coordinate NGO activities, it is only built on the voluntary participation of NGOs to facilitate the exchange of information that promotes coordination among its members. Despite the presence of these regulating and coordinating institutions, NGO financial activities are largely unregulated and unfocused. At the same time, the CBG, especially the role of the ACU unit in training, designing and implementing financial programs along with education and information dissemination through seminars, resembles that of a coordinating development agency rather than a regulatory institution. Finally, TANGO is also involved in information dissemination and coordination of NGO activities. In short, the current roles played by CBG and TANGO overlap and duplicate one another with the roles of the trust funds ambiguous and potentially damaging to the creation of viable, self-sustaining local savings and credit associations in The Gambia.

[34] The funds became operational in 1991. About 125 women were trained under their skills development program before getting credit. An interest rate of 13% per annum is charged.

115

It is essential to realize the need for regulatory requirements and coordination. Therefore, it is necessary to identify the roles of potential regulating and coordinating institutions that can bring order to the NGOs involved in financial markets. The CBG, as the central supervisory authority for financial institutions should be prepared to perform the role of an external, objective and non-partial regulator of NGOs. The CBG should be given the means and resources to perform rudimentary regulatory functions for the diverse NGOs involved in financial intermediation. On the other hand, TANGO as an association of NGOs should have a comparative advantage in functioning as a second level federation, as a lobby for NGOs, and as a forum to discuss problems and lessons learned through diverse NGOs financial programs. TANGO should not be a regulator. To ask TANGO to regulate NGOs (as distinct from training, technical assistance, information dissemination, etc.) is, in effect, allowing regulatees (those who are regulated) to be the regulator. The conflict of interest inherent in letting TANGO serve as a regulator is obvious. Therefore, while the CBG should perform the role of regulator, TANGO should assume the responsibilities of (i) acting as an NGO lobby to promote their interests in negotiations with donors and the government; (ii) providing an active forum for discussing NGO issues; (iii) coordinating NGO efforts through information dissemination; and (iv) improving NGO performance through training, education, technical assistance and auditing services. It is clear that TANGO is not currently equipped with a staff (in number or in training) to carry out these comprehensive responsibilities adequately. It is imperative that donor agencies commit themselves to a more serious effort to strengthen the staff of TANGO or a comparable institution to carry out these service functions. The next section suggests several regulatory and coordinating guidelines to streamline NGO activities in The Gambia.

VI. RECOMMENDATIONS FOR REGULATORY CRITERIA AND OPERATIONAL GUIDELINES FOR NGOs

1. Introduction

With NGOs beginning to offer financial services under diverse financial technologies, it is now opportune to consider the adoption of regulatory and operational guidelines to improve the efficiency of the financial services and the soundness of these institutions. It is clear that the benign neglect of NGOs as suppliers of financial services is no longer appropriate. The laissez faire approach of allowing NGOs to enter financial markets in whatever helter-skelter fashion they wish, regardless of market distortions, needs to be reexamined.

If NGOs presume to offer financial services, they should first realize that conceptually this service is markedly different from the grant activity with which they have been accustomed. Finance is not just another service provided by NGOs. It is conceptually different. Discipline is not required in handing out grant services, whereas it is the essential

core of financial management. Second, it is important in offering financial services to cover the costs of supplying these services in the prices (i.e. interest rates) charged for them. Third, NGOs have to recognize that some of their previous grant beneficiaries will not qualify for loans. While grants are necessarily inclusive, financial services must to some extent be exclusive. Fourth, the supply of financial services should not be considered a one-shot exercise through a quickly eroding revolving fund, but rather a service that supplies a sustained flow of services over time built on responsible loan repayment. Moreover, it must be recognized that effective loan recovery can only come from an institution that creates both the capacity and the will to collect on due loans. This task can be more easily carried out when the loan funds are derived from locally mobilized savings than from external sources. Furthermore, savings instruments are an important service for rural Gambians. These should be supplied in addition to loan services. Finally, the long run goal should be to graduate either the customer-beneficiaries and/or the institution itself into viable, self sustaining agents of financial intermediation.

This section offers first the pertinent regulatory criteria for the attention of Gambian authorities, and second, internal operational guidelines for the NGOs to consider adopting to achieve the goals outlined above.

2. Regulatory and Supervisory Roles for the CBG and TANGO

The Central Bank of The Gambia (CBG) should assume the principal responsibility of regulator while TANGO performs the role of coordinator and service organization. It is inappropriate to allow TANGO to directly regulate NGO activity since this would constitute a potential conflict of interest with the regulatees simultaneously being the regulators. Just as banks are not permitted to regulate themselves through a bankers association, NGOs should not regulate themselves through TANGO. However, TANGO has a number of valuable roles to play as a service organization for NGOs. TANGO should focus heavily on strengthening NGO capacity to become viable financial agents through technical assistance and workshops reviewing NGO progress in this area. It should also be prepared to offer auditing services as a part of its technical assistance role. Finally, given its presumed comparative advantage of frequent close working contact with local NGOs in the field, it should be in a position to supply useful operational information for the CBG. At the same time, the CBG should transfer the current range of development agency tasks (promoting NGO financial intermediaries, training and workshop activities, etc.) to a strengthened TANGO staff and, in turn, properly concentrate on its regulatory role. Consistent with this, donors should invest much more in strengthening TANGO to carry out its responsibilities effectively.

In the event that the CBG may be concerned about fine tuning its task of regulating NGOs, NGO donors and international organizations such as the WB, UNDP, USAID could assist in helping the CGB provide the appropriate infrastructure and adopt the relevant

criteria to supervise the evolution of non-bank, client-owned financial organizations. A special unit set up at the CBG or the ACU should have the responsibility of receiving financial reports and audits and undertaking spot field visits to randomly check operations and prevent fraudulent practices that might affect savers. However, as mentioned above, since regulating small scale, scattered and heterogenous NGOs involves high transaction costs, the CBG should minimize its regulatory role to only the simplest of functions. For the most part the fledgling village based savings and credit are client-owned institutions and therefore should not be held to the same regulatory criteria used for banks. The regulatory unit at the CBG should work out appropriate reporting and supervisory criteria after consultations with NGOs and TANGO. In devising these guidelines CBG officials should be properly sensitive to the small scale and flexible nature of many of these rudimentary financial intermediaries and not come in with a heavy regulatory hand that stifles local innovative behavior. More specific regulatory criteria should include the following:

A. Registration

All NGOs should be required to register with the appropriate authority or office within the Central Bank (CBG). The registration should include:

a) the address of the NGO establishment; and
b) the identity of the chief operating officer responsible for all the information required by the CBG in its mandate as principal regulator of financial institutions in the country.

B. Statement of Operational Plans

All NGOs presuming to establish financial operations in The Gambia should first be required to present an operational plan to the CBG. This plan should set forth the following:

a) the names of the villages in which they expect to operate;
b) the identity of any principal kafos or other relevant constituencies or clients whom they expect to serve;
c) the procedures to be established in the supply of loan and savings services;
d) the interest rate policies envisioned in the intermediary. The CGB should critically evaluate the extent to which the stated interest rate policies may be disruptive of healthy competition within a village or region thereby causing confusion to local constituencies as one program may deliberately subsidize its rates to the detriment of another program attempting to achieve financial viability with market rates;
e) the criteria whereby the NGO ensures it is separating its financial services activity from its grant activity. This is important both for operations and for reporting (i.e. accounting) purposes.

121

C. Reporting Requirements

All NGOs should be required to submit quarterly and annual reports to the CBG documenting their financial services activity in The Gambia in the previous period. The CBG should work closely with TANGO staff and relevant NGO donors to design an appropriate balance sheet and income and expense statement pertinent for NGO financial intermediaries to meet these reporting requirements.

D. Portfolio Composition

The CGB should be sensitive to the dangers inherent in allowing a financial intermediary based on deposit sources to place all or most of its loans in the same type of enterprise or clientele. The covariance of risk here in which all borrowers could simultaneously succumb to the same downside risk of failure will destroy any intermediary with depositors losing their savings. While explicit operational criteria on proper portfolio diversification may be premature at this stage of NGO intermediary development, the CGB authorities should keep this issue in mind during its supervisory review of the supply of financial services by local NGOs. Portfolio diversification also diversifies risk, thereby contributing to the fiduciary responsibility of protecting depositor savings.

E. Minimum Prudential Reserves

Local deposit-based NGO intermediaries should hold within their decentralized units a minimum prudential reserve (of 15 to 20 percent of their deposit liabilities). This will instill confidence among savers that they can have ready access to their savings for contingency purposes. Most NGOs have ambiguous savings programs that are generally inadequate to meet the emergency requirements of their savers. The CBG should include this liquidity reserve as a regulatory guideline for local NGO intermediaries to follow in their decentralized units. This is particularly important because of the allegations that exist about the loss of savings due to the failure of the Agricultural Development Bank in the mid-1980s and the closing of the CTCS units within the GCU network during the late 1980s.

Furthermore, there should be no misunderstanding about these prudential or liquid reserves. These are not reserve requirements held in the CBG. It would be heavy handed and inappropriate for the CBG to presume to hold reserve requirements from the deposit base of these embryonic NGO intermediaries. The prudential reserves referred would be held within the decentralized units in the field to be available for liquidity management and contingency purposes of the NGO itself.

3. Operational Guidelines for NGOs

In addition to the regulatory criteria set forth above, there are equally relevant operational guidelines that are in the interest of the NGO community to adopt to promote self sustaining field level intermediaries.

A. Source of Funding: External vs. Domestic

There is a clear need to shift the source of funds for on-lending from external resources to locally mobilized savings. The majority of NGOs are still heavily dependent on external grants rather than locally mobilized deposits and savings to fund their loan programs. Revolving funds are generally established through donor grants to sustain loan operations. Not surprisingly, these funds rapidly shrink due to poor loan recovery and the impact of inflation that erodes the real value of the funds over time. Therefore, these programs cease to operate with the drying up of external funds. In extreme cases the revolving funds revolve only once (i.e., they collapse into unintended grant transfers through wholesale default). External funding has a valuable role to play in covering technical assistance, training, infrastructure and equipment expenses for local NGO financial initiatives. However, outside funding should not be used as the principal source of funds for on-lending. This applies to the use of the GVDTF/UNDP trust funds as well as to donor funds per se.

The infusion of locally mobilized savings into loan programs will have four effects: (i) increase the pool of resources, (ii) provide valuable and properly remunerated deposit services for net savers in the community, (iii) increase local participation and peer monitoring of the programs thereby improving loan repayment substantially, and (iv) reduce dependence on external sources thereby creating a base for long-run institutional viability. No loans should be issued to borrowers that have not previously proven their willingness and capacity to save in the same institutions or associations granting them loans. Good savings behavior is an excellent collateral substitute that signals the likelihood that the borrower is creditworthy.

To the extent that external donor funds are in fact used for on-lending purposes, they should come on-line only after the local association has proven (in two or three years) that it is viable with locally mobilized savings. Moreover, they should not constitute more than a fairly small, perhaps 15 to 20 percent, portion of the total base of funding for loans, and they should not lead to targeted or subsidized loans. On the contrary, outside funds should blend in with locally mobilized resources to make untargeted loans. Targeted (and subsidized) loan schemes are signals to local borrowers that this money does not come from locally mobilized savings and a donor virus will spread as they consider this an "entitlement" and refuse to repay loans.[35]

---

[35] Note the discussion about the careful use made of external funds in the VISACAs presented in Chapter V.

B. Member Education Programs

A second need is to develop member education programs clarifying the philosophy behind NGO financial programs, the responsible use and administration of funds, repayment ethics, savings mobilization, etc. This will also reduce the confusion among beneficiaries about the legitimate obligation to repay loans and distinguish these from developmental grants for nutrition, education, health, etc. issued from the same NGO. TANGO staff could be drawn into directing these efforts as a service organization working with parent NGOs designing training modules and scheduling workshops to disseminate promotion materials that educate local NGO member/participants on the obligation to save regularly, borrow prudently and repay promptly.

C. Portfolio Diversification and Program Risks

A third need is to diversify NGO activities in terms of geographic coverage and portfolio composition to reduce the risks associated with the covariance in incomes. The majority of NGO programs are currently concentrated around narrow geographic pockets of activities and similar risk-prone income generating activities. This recommendation may require the NGOs to either individually expand beyond single villages and single enterprises or coordinate with other NGOs operating in more diversified environments and portfolios. While the issues associated with diversification compounds the problems in implementing financial activities in the short-run, it is essential to diversify and spread lending risks for the long-run survival as a lending institution. In this regard, NGOs should not force all or most of local savings deposits into allegedly "productive" loans (i.e. agricultural loans). These are the loans with the highest risks and lowest average returns in a rural portfolio; therefore a heavy bias in this direction will quickly create an insolvent institution, placing depositors savings at risk. Instead, the loan portfolio should be balanced among a diverse set of agricultural and non-agricultural activities as well as consumption loans.

D. Scope Economies

Multifunctional NGOs should design their financial programs to take advantage of their other community developmental activities. For example, borrowers should benefit from their education and skills development programs to improve loan repayment performance. The decision whether to follow a minimalist approach (provide only loans and savings services) or a multipurpose package of services (in addition to loans and savings) in supplying financial services could be a function of the complementary services available among the various activities of an NGO.[36] In making this decision, however, it should be noted that the multipurpose approach is far more demanding administratively for local managers.

---

[36] The decision on this matter is not easy without rigorous feasibility studies. The available methodological tools for detailed feasibility studies, however, are less developed. The AID stocktaking of microenterprise projects reported in Boomgard discusses these issues in detail.

E. Minimum Prudential Reserves

As mentioned earlier in the previous section on regulatory guidelines, savings mobilization can be promoted only if the NGOs can instill confidence among the community regarding safety and accessibility to their deposits. While NGOs are often considered "the good guys on the block", the majority have ambiguous savings programs that are inadequate to meet emergency requirements of savers. It is advisable that prudential reserves from 15 to 20 percent of outstanding savings deposits be maintained in decentralized units to meet these contingency needs.

F. Minimum Prudential Rules on Penalties for Default/Delinquency

Although the existing legal system may be used to enforce contacts, no insurance agency exists that protects NGO savers in case of delinquency/default problems as the Central Bank implicitly does for depositors in banks. While there are provisions for penalties for default and delinquency in NGO programs, many are not rigorous in implementation. Therefore, NGO loans are often perceived by the beneficiaries as grants that need not be repaid. This undermines the financial programs of other financial intermediaries and NGOs in the same areas who impose strict penalties for the non-repayment of loans. At the very least seriously delinquent borrowers should not receive new loans. At the same time, interest rate penalties should be considered, and, enforcement action taken to secure tangible collateral pledged for the loan. In the event of group loans, no further funding should be forthcoming until the group repays the loan difference for any individual defaulter within the group.

G. Positive Real Interest Rates for Loans and Deposits

As a goal NGOs should strive to charge and offer positive real rates of interests on loans and deposits, respectively (i.e. charge and pay interest higher than the rate of inflation). Any margin above this level should be left to each NGO to determine. Interest rates should reflect the real costs incurred by an NGO in offering a sustainable flow of financial services. The costs of financial services are influenced by the financial procedures and practices adopted by the NGO which are in part determined by the source of funds, infrastructure facilities, and type of clients, enterprises and areas serviced. In the presence of multiple NGOs with diverse financial practices and clientele, it is not necessary to arrive at a uniform cost of financial services. Ideally, interest rates should at least be positive in real terms (i.e., cover inflation) and cover operational costs.[37] These bare minimum thresholds for interest rates on loans should reduce the negative externalities of non-market distortions caused by subsidized lending in addition to encouraging efficient use of NGO resources by the beneficiaries while positive deposit rates will promote savings mobilization. The interest

[37] Random interviews were conducted with NGO loan beneficiaries in 3 villages. The beneficiaries had revealed preference for adequate, continuous and timely loans with positive real interest rather than one shot grants.

125

rates established within NGO programs in The Gambia are generally similar across all types of borrowers, enterprises and geographic regions regardless of the differential costs due to differential client risks. Some loans are clearly less risky and therefore less costly than others. NGOs should employ a variable rate structure to reflect these differences.

H. Minimum Uniform Bookkeeping Practices and Quarterly Reports

It is essential that NGO financial activities be documented in a comparable fashion to permit evaluation of their financial performance. For example, the simple single entry bookkeeping followed by the VISACAs permits an easy evaluation of their performance. Furthermore, for the multifunctional NGOs, separate accounting needs to be maintained between their financial and nonfinancial activities. While common costs may exist among various activities of a multifunctional NGO, it is essential to recognize the basic costs and benefits involved in administering the financial programs separate from other programs. Attempts should be made to create a rudimentary or simple balance sheet and income statement to document the financial activity of NGOs. Parent NGOs, independently or in conjunction with TANGO, should work with their local units to prepare and then train them to handle this simple documentation. This information should be prepared on a regular basis and used to prepare quarterly reports on the financial condition of the local NGO unit.

I. Linkages with Formal Institutions

There is a continuing need for NGOs to develop linkages with formal financial institutions. The NGOs are multifunctional and are not specialized financial intermediaries. Therefore, their financial operations are less focused, more rudimentary and smaller scale than those of formal institutions. Their efficiency in financial intermediation can, however, be improved by increased ties with formal financial institutions that are specialized in financial intermediation. Currently, the links with formal banks are limited to depositing surplus or temporarily idle revolving funds in Banjul to earn market rates. These are valuable services and contribute to more effective liquidity management for NGO headquarter operations in Banjul. However, the almost complete absence of formal bank branches in rural areas restricts the development of these linkage services for the decentralized village banks in the interior. This deficiency underscores the constraints that an inadequate branch banking network creates for the development of NGO networks in the rural areas of The Gambia. Therefore, parent NGOs that transfer and place all the surplus savings of their decentralized associations into Banjul banks may compromise the ability of these local associations to meet the contingency needs of their rural clientele. On the other hand, leaving all these funds (beyond the prudential liquidity reserves) in local associations may forego an opportunity to earn a decent return on seasonally idle funds.

J. The Graduation Syndrome

In the future there may be an opportunity to transform some NGOs into formal financial institutions. It is obvious that despite the more liberalized economic policy

126

environment in The Gambia today, existing formal financial institutions are not suited to service the poor or rural clientele.[38] Therefore, it may be useful to graduate some NGOs who serve marginal groups into somewhat more formal institutions such as savings and loan cooperatives, credit unions or village/rural banks. In other words, instead of trying to graduate NGO clients into commercial bank portfolios, some NGO financial intermediaries themselves could be transformed into more formal financial institutions. The relevance of this recommendation, however, is contingent on the degree to which the NGOs are seriously committed to become responsible financial institutions offering sustained financial services through locally mobilized savings. This concept of graduation emerged as a recommendation in AID's recent microenterprise stocktaking exercise.[39] Nevertheless, it should be noted that there are few examples to demonstrate how feasible it is in practice to convert a socially oriented NGO into an efficient banking operation.

4. Summary

The major theme of this chapter has been the strategic role of locally mobilized savings as the essential building block to create viable village banks/associations offering a sustained supply of financial services to their clientele. To properly remunerate local depositor/savers market rates of interest must be established for both savings and loan contracts. Externally injected revolving funds for on-lending undermine this effort to reward savers and weaken the resolve for effective loan recovery. These funds would be much better spent if they were directed towards creating the human capital base needed (both in local associations and in service organizations like TANGO) to launch and administer successful village savings and credit associations. Finally, the combined regulatory and coordination roles need to be quickly rationalized with the CBG restricting its role to be the principal regulator and TANGO the principal training and service organization for NGOs in The Gambia.

---

[38] See Chapter 1 for further details.

[39] See James Boomgard, AID Microenterprise Stocktaking Synthesis Report, December 1989.

REFERENCES

Adams, Dale W, Douglas H. Graham, and J.D. Von Pischke, Undermining Rural Development with Cheap Credit, Boulder: Westview Press, 1984.

Agricultural Credit Unit, "A Report of the Establishment of Pilot Savings and Credit Kafo's (SACKS)," Banjul: The Central Bank of The Gambia, 1992.

Boomgard, James, "AID Microenterprise Stocktaking: Synthesis Report," AID Evaluation Special Study No. 65, USAID, Washington, D.C., December 1989.

Brown, David L., and David C. Korten, "Understanding Voluntary Organizations: Guidelines for Donors," World Bank WPS 258, September 1989.

Diamond, Larry, Juan J. Linz, and Seymour Martin Lipset, "Democracy in Developing Countries: Facilitating and Obstructing Factors," in Freedom in the World: Political Rights and Civil Liberties, Raymond D. Gatil, ed., New York: Freedom House, 1988.

Zeller, Manfred, Ken John, and Ebrahim Kamara, "Rural Financial Markets and Their Food Security Linkages in The Gambia: Current State and Policy Implications," Washington, D.C.: International Food Policy Research Institute, 1991.

Zeller, M., J. Von Braun, K. John, and D. Puetz, "Sources and Terms of Credit Faced by the Rural Poor in The Gambia: Policy Implications," Washington, D.C.: International Food Policy Research Institute, 1991.

Miscellaneous program brochures and memorandums consulted:

1. Action Aid, The Gambia: AATG's Agricultural Credit Scheme.

2. TANGO: Profile on Policies, Organization and Operation.

3. GVDTF: Outline on the Credit Program, 1992. (manuscript)

4. World View International Foundation: Credit Program.

5. CRS: Summary of Activities 1989-1990; Annual Report 1990.

6. SCF/USA: Annual Report on Credit and Technical Assistance Project, 1991.

7. GRUDA: Background Information.

8. WID: A Profile on Policies, Organization and Operation.

9. WISDOM: Objectives, Organization, Development and Services.

10. AFET: Guide to Activities, 1991.

11. TANGO TALKS: Vol 2, No. 1, March 1992.

Table II-1 Roster of NGOs Offering Financial Services in The Gambia.

A. International NGOs

1. SCF/USA : Save the Children, USA.
2. CRS : Catholic Relief Services.
3. AATG : Action Aid, The Gambia.
4. WVI : World View International.
5. AN: Africa Now.
6. FFHC/WRP: Freedom From Hunger Campaign, Women's Rice Project.

B. National NGOs

7. NWB: National Women's Bureau.
8. GWFA : Gambian Women Financing Association.
9. WISDOM : Women in Service, Development Organization and Management.
10. GRUDA : Gambian Rural Development Agency.
11. AFET : Association of Farmers, Educators and Traders.
12. AGE : Association of Gambian Enterprises.
13. GARDA: Gambia Rural Development Agency.

C. Unclassified

14. VISACA : Village Savings and Credit Associations (associated with CIDR and KWF).

Table II-2 Volume of Direct Agricultural Loans by Various Sources, 1991-92.[1]

No.	Name of participating Institution	Volume of loans (in millions of Dalassis)[2]	Relative Share %
		(1)	(2)
1	Gambia Cooperative Union (GCU)	3.75	51.7
2	Food and Agricultural Organization (FAO)[2]	1.97	27.10
3	Commercial Banks	0.22	3.03
4	Non- Governmental Organizations (NGOs):[3]		
	AATG	(0.86)	(11.8)
	SCF/USA	(0.21)	(2.9)
	VISACA	(0.21)	(2.9)
	AFET	(0.04)	(0.6)
	Subtotal	1.32	18.2
5	Total	7.26	100.00

Note 1: The volume of loans from foreign sources, credit unions, private entrepreneurs and informal credit markets are not included in this table due to data limitations.

2: This includes loans through private fertilizer dealer associations, maize growers associations and block demonstration villages.

3: This includes only the NGOs who provided data on their loan portfolio, and therefore is incomplete.

Table II-3 The Sample of NGOs, Associated Organizations and Beneficiaries Participating in the Study.

I. Non-Governmental Organizations (NGOs)

A. International NGOs

1. SCF/USA : Save the Children, USA
2. CRS : Catholic Relief Services
3. AATG : Action Aid, The Gambia
4. WVI : World View International

B. National NGOs

5. GWFA : Gambian Women Financing Association
6. WISDOM : Women in Service, Development Organization and Management.
7. GRUDA : Gambian Rural Development Agency.
8. AFET : Association of Farmers, Educators and Traders.
9. AGE : Association of Gambian Enterprises

C. Unclassified NGO

10. VISACA : Village Savings and Credit Associations

II. Coordinating/Regulatory Institutions

1. CBG : Central Bank, The Gambia
2. TANGO : The Association of Non-Governmental Organizations
3. GVDTF/UNDP : Gambia Village Development Trust Fund/United Nations Development Project
4. WWB/WID: Women's World Bank/Women in Development

III. Beneficiaries

1. Women Kafo at Kwinella: AATG beneficiaries
2. Yaminkunda Sesame Seed Processing Plant: AATG beneficiaries
3. Farmers in the Sapu area: AATG and VISACA beneficiaries

137

Table II-4.1 Operational Philosophies of Sample NGOs Offering Financial Services in The Gambia.

No	NGO	Operational Philosophy
		I. International NGOs
1	AATG	Uses AATG loans to form a Village Based Group Revolving Fund (VGRF) to finance future village activities. Traditional kafos are used as basic units of contact.
2	CRS/USA	Promotes institution building by assisting financial programs that involve communities; Collaborates with existing organizations in providing financial services.
3	SCF/USA	Establishes Community Based Credit and Technical Assistance (CTAP) program for forming Village Based Funds (VBF) to help in community development and income diversification of rural poor.
4	WVI	Assists in self sustaining community development within its cultural framework through an integrated approach. Encourages collective savings to form Revolving Credit Funds (RCF), and implements a savings linked credit program.
		II. National NGOs
5	WISDOM	Organizes women osusus into functional groups and strengthens them to become viable and reliable credit institutions.
6	AFET	Develops group loans through traditional kafos as Savings and Credit Associations (SCA) to improve access to financial services in non-banked areas.
7	GWFA	Establishes a viable credit institution to increase access to production credit by women through the Loan Revolving Fund (LRF) and the Loan Guarantee Scheme (LGS).
8	AGE	Strengthens osusus as viable intermediaries and links up with formal financial institutions.
9	GRUDA	Invokes village level participation in credit programs by assisting existing village structures like kafos. Increases access to consumption credit at reasonable rates.
		III. Unclassified NGO
10	VISACA	Village run institutions providing reliable and profitable savings alternatives and untargeted loans to individual clients in a market oriented unsubsidized fashion.

Source: Brochures issued by individual NGOs.

Table II-4.2 General Characteristics of Sample NGOs by Selected Criteria of Activity, Sponsorship, Size, Location, Membership and Financial Services.

No.	NGO	Year Started	Activity[1]	No. Members	Beneficiary/ target group	Source of funds	No. villages	Service Areas[3]	Fin. service offered
	(1)	(2)	(3)	(4)	(5)	(6)	(7)	(8)	(9)
				I. International NGOs					
1	CRS	1964	Institution building, health, nutrition, agriculture, credit and savings	56,000 women in nutrition and health programs	Women Kafos	Private donations from USA, USAID, IDRC, Ford Foundation	NA	All through Gambia	Credit & Savings: Coordinate with GWFA and AFET
2	AATG	1979-80	Education, community health, agriculture research, water, credit	177,300	Kafos	Child sponsorers in UK	582	LRD, MID-S	Credit & compulsory savings
3	SCF/USA	1985	Health, education, agriculture, credit and savings	NA	Individuals and groups; 60% beneficiaries are women	OXFAM	NA	NBD	Credit and compulsory savings
4	WVI	1992	Education, skills development, health, nutrition, Savings and credit	NA	Agriculture and enterprises: Kafo style Groups formed by WVI	Norwegian NGO: WVI Foundation	NA	NBD	Credit and savings (Yet to begin)

Table II-4.2 (cont.)

No.	NGO	Year Started	Activity[1]	No. Members	Beneficiary/ target group	Source of funds	No. villages	Service Areas[3]	Fin. service offered
	(1)	(2)	(3)	(4)	(5)	(6)	(7)	(8)	(9)
					II. National NGOs				
5	GWFA	1987	Research and data collection on women activities, credit, skills development training	300	Women entrepreneurs: groups or individuals	Revolving fund raised through fund raising activities, WB/WID, and USAID.	60	Mostly around Banjul	Credit. Planning on savings activities in collaboration with WWB/WID,CRS.
6	AFET	1988	Technical skills in agriculture and rural development, Education, Credit and savings	9300 (70% women)	Vegetable gardens, bee keepers, microentrepreneurs, women and youth: Kafos.	DANIDA, US Embassy, CRS, Forestry dept.,Central Bank of the Gambia.	14 zones	WD, LRD (planning on NBD and URD)	Credit and savings
7	WISDOM	1989	Training, Education, Awareness creation on gender issues, credit and savings	9031	Vegetable gardens, microentrepreneurs: Women and osusus	Partial funds from OXFAM	300	Mostly around Banjul	Credit and savings
8	GRUDA	1989	Training for skills development, Credit	NA[2]	Farmers, women entrepreneurs: Kafos	UNDP, CRS, Village Aid/UK	NA	MID-N	Credit (yet to begin)
9	AGE	NA	Training in skills development, savings	250	Microentrepreneurs /osusus	NA	NA	Around Banjul	Savings
					III. Unclassified NGO				
10	VISACA	1988	Savings, credit, education	1384 (includes 56 Kafos)	Rice farmers and retail traders: Individuals and Kafos	French NGO (CIDR) and German funds from KFW	6	MID-S	Savings and credit

Note 1: Listed by order of importance
2: NA : Not available
3: WD: Western Division; LRD: Lower River Division; NBD: North Bank Division; MID-N: McCarthy Island Division-North; MID-S: McCarthy Island Division-South; URD: Upper River Division.

Table II-5 Financial Services Offered by NGOs: Loans.

#	NGO	Year Started	Source of funds	Type of Loan[1]	Target group	# borrowers	Int.rate/yr	Collateral	Ave. loan size	Repayment rate	Areas covered[2]
	(1)	(2)	(3)	(4)	(5)	(6)	(7)	(8)	(9)	(10)	(11)
					I. International NGO						
1	AATG	1983	UK sponsorers	ST & MT agricultural credit: Inkind loans, production credit	Kafos	246 G.nut groups and 53 rice groups (as of FY 1991-92)	0 to Kafos until 1991 and 12 after that.	Group liability	NA[3]	42% (as of Oct.91)	MID-S and LRD: 375 villages
2	SCF/ USA	1985	Revolving funds: Grants from OXFAM, membership fees, int.rates	ST,MT,LT: Inkind or cash loans, production credit	Groups and individuals. Groups as conduits for individual loans; 30% must be women beneficiaries	54 outstanding loans	15 for all beneficiaries ST or LT	Group guarantee, legal protection, social sanctions.	D500 to 28,500.	75%	NBD: 75 villages
3	CRS	a.1982-88: Grants b.1988: Loans with GWFA and AFET	a.CRS funds b.Matching grant from USAID	a.Investment grants: Inkind grant b.ST and MT: Cash loans, production credit	a.Sesame seed growers: Women Kafos b.GWFA and AFET	a.50000 women	Grant	NA	NA	NA	a.All thr. .h Gambia where sesame is grown b.AFET and GWFA areas
4	WVI	1992-93	Membership fee, savings put in revolving fund and matched by WVI.	ST: Cash loans, production credit	Kafo style groups: 5-15 members	NA	NA	Group guarantee	NA	NA	NBD

Table II-5 (cont.)

#	NGO	Year Started	Source of funds	Type of Loan[1]	Target group	# borrowers	Int.rate/yr	Collateral	Ave. loan size	Repayment rate	Areas covered[2]
	(1)	(2)	(3)	(4)	(5)	(6)	(7)	(8)	(9)	(10)	(11)
					II. National NGO						
5	GWFA	1987	a.Revolving funds b.Loan guarantee scheme with standard chartered	6 to 12 month credit: Cash loans, production credit	Kafos and individuals	a.13 loans b.1 loan	a.12.5: revolving funds b.23.5: Std. chartered	a.Membership contribution b.GWFA guarantee	a.D5000 b.D20000	NA	Banjul area
6	WISDOM	1989	OXFAM	ST and LT: Cash loans, production credit	Women osusus and limited individuals	215 rural and urban groups	11	Salaried worker as guarantor, half of savings and group liability.	D1000 to D3000 for ST loans. D20,000 for LT loans.	High	Mostly around Banjul
7	AFET	1990-91	Savings mobilized, Central bank of the Gambia	ST : Cash loans, production credit	Kafo type groups	1343 (82% women)	24	3 guarantors, 3/4 of savings	NA	High	13 villages in Bwiam and Karantaba: LRD and WD.
8	GRUDA	1992	UNDP	ST and MT loans: Cash loans, Cons. and prod. loans	Kafos and individuals	NA	Planning on market rates	NA	NA	NA	MID-N
					III. Unclassified NGO						
9	VISACA	1988	Savings mobilized, from farm income in Jahally-Pachar project	ST: Cash loans, production loans	Clients in rice farming and retail trade	827 loans issued up to March 1991	40-60 (depends on VISACA)	Animals, farm implements and jewelry	D20 to 3000; mean: D200.	95	MID-S: 6 villages

Note 1: ST: short-term loans (less than 9 months); MT: Medium-term loans (Uptil 3 years); LT: Long-term loans (Uptil 5 years)
2: WD: Western Division; LRD: Lower River Division; NBD: North Bank Division; MID-N: MaCarthy Island Division-North; MID-S: McCarthy Island Division-South; URD: Upper River Division.
3: NA: Not Available

Table II-6 Financial Services Offered by NGOs: Savings Mobilization.

No.	NGO	Year started	Type of savings	Target	Use of funds	Annual Int. rate (%)	Area covere d[2]
	(1)	(2)	(3)	(4)	(5)	(6)	(7)
				I. International NGO			
1	AATG	1986	Compulsory contribution:D10 /member/month by groups assisted with credit	Kafos	Goes to build Village Group Revolving Funds	0	MID-S and LRD
2	CRS	1988	Collaborates with GWFA and AFET	Women kafos	NA[1]	NA	NA
3	SCF/USA	1992	a.Compulsory savings by beneficiary groups b.Savings by group members	Groups and Individuals	Goes to Bank in individual savings accounts	Earn bank rate	NBD
4	WVI (Yet to begin)	1992	Collective savings from kafo style groups, individual savings	Groups and individuals	Build group funds	0	NBD
				II. National NGO			
5	WISDOM	1989	Matches osusus savings by 1:3	Women: osusus	Buys T-Bills	WISDOM Pays osusus 13%, and T-Bills pays WISDOM 18.5%	Around Banjul: 3000 women
6	AFET	1990-91	a.Deposits with an agreed time of withdrawal b.Fixed deposits for more than 3 months	Kafos	Gives out loans	a.18 for deposits over D 250 b.15%	14 Zones: 12 savings kafos with 6000 members
7	GWFA (Yet to begin)	1993	Collaborates with WWB/WID	Women: Savings and credit Kafos	Gives out loans and link up with banks	NA	200 villages projected
8	AGE	NA	Osusus: Monthly rotation with 10% compulsory contribution to member's bank account	Osusus	Consumption or productive use by members	10% earns bank rate	Around Banjul
				III. Unclassified NGO			
9	VISACA	1988	a.Term deposits for 3,6 & 9 months. b.Current accounts	Rice farmers and Kafos	a.Gives out loans	a. 20 to 30 b. 0	6 villages in MID-South

Note 1: NA : Not available
2: WD: Western Divison; LRD: Lower River Division; NBD: North Bank Division; MID-N: MaCarthy Island Division-North; MID-S: McCarthy Island Division-South; URD: Upper River Division.

Table II-7 NGO Financial Activities: Strengths and Weaknesses.

No.	NGO	Strengths	Weaknesses
	(1)	(2)	(3)
		I. International NGO	
1	AATG	a. Wide coverage of beneficiaries b. Group responsibility system to build revolving funds and incentive based credit program reduce moral hazard problems c. Links village kafos to formal financial institutions through their deposits. d. Use of traditional kafos increases village level participation.	a. Covers only upper 20% of the rural population. b. Undermines other credit programs that charge market rates. Need to shed the grant approach. c. Sustainability of the program in the presence of growing inflation rates and negative real int.rates is difficult. Will erode revolving funds easily. d. Compulsory savings program with no int.rate provide less incentives to save with revolving funds. e. Poor recovery performance
2	CRS/USA	a. Coordinates with national NGOs to minimize costs b. Benefits women.	a. No well planned credit/savings programs of their own b. Do not involve in credit and savings activities of sesame seed growers associations assisted by CRS. Could have helped them to link up with formal financial institutions.
3	SCF/USA	a. Establishment of village based funds (VBF) serves insurance purposes b. Matching locally mobilized funds by loans (1:3) from STC to build VBF provides incentives for active community participation. c. Non-minimalist approach helps in overall community development. d. Group liability reduces moral hazard problems: economies of information.	a. No voluntary savings program to build VBF. b. Links with formal financial institutions are very weak.
4	WVI	a. Use of kafo style groups to form revolving credit funds (RCF) increases village participation and creates collective group responsibility. b. A strong bias towards savings mobilization to build RCF.	a. Formation of groups by WVI instead of using existing kafos can undermine multifunctions traditionally provided by kafos. b. Need to plan linking RCF with formal banking systems to avoid funds lying idle. Need good plans for portfolio diversification. c. Proportionate linking of credit to savings may benefit rich beneficiaries rather than poor.

Table II-7 (cont.)

No.	NGO	Strengths	Weaknesses
	(1)	(2)	(3)
		II. National NGO	
5	WISDOM	a. Benefits women b. Encourages savings among women and links them with banks c. Pays positive interest on deposits	a. Limited rural coverage b. Very cautious lending procedures; linking credit to savings may benefit richer women more. c. No portfolio diversification
6	AFET	a. Use of kafos increases village level participation b. Strong savings program; savings linked credit program. c. Back up by Central Bank and CRS d. Market rates for credit and savings programs e. Borrower screening by village level committees reduces moral hazard problems.	a. Need to consolidate savings programs and link them with formal financial institutions. b. All savings all loaned out: No protection to savers; need more portfolio diversification. c. No prudential reserves maintained to meet contingency requirements.
7	GWFA	a. Benefits women b. Increases access to bank loans through loan guarantee schemes.	a. No rural penetration
8	AGE	a. Functions as a facilitator of osusus. b. Links up osusus with banks.	a. No rural penetration b. No direct financial intermediation.
9	GRUDA	a. Use of kafos prevents destroying traditional groups and increases village participation. b. Group participation reduces moral hazard problems. c. Provides consumption loans	a. No savings program; sustainability of program is limited. b. Not well designed to handle consumption loans.
		III. Unclassified NGO	
10	VISACA	a. Strong local participation and basis on locally mobilized funds, and little donor intervention b. No targetting of loans c. Maintain prudential reserves for contingency requiremenst d. Efficient use of collateral substitutes to enforce contracts d. Commited staff.	a. Nuclear units that are subject to risks due to covariance of income. b. Replicability limited to areas with assured income generating activities. c. Matching of savings and credit term structures are less flexible in recycling funds.

Common weakness of all NGO activities

1. Lack long-term credit component
2. Sustainability without external funds is questionable
3. Lack links with formal financiaal institutions for refinancing, liquidity management, and financial intermediation
4. Cover only small areas and lack national coverage
5. Overlap of activities.
6. React to donor signals.

APPENDIX II-1
LIST OF NGOs IN THE GAMBIA[1]

No.	Abbreviation/Full Name	National/International
1.*	AATG - Action Aid The Gambia	I
2.*	ABWE - Assoc. of Baptists f. World Evangelism	I
3.	ADRA - Adventist Development and Relief Agency	I
4.*	AFET - Assoc. of Farmers, Educators and Traders	N
5.	African Islamic Board for Medical & Social Aid	I
6.	Africa's Self Help Organisation	?
7.*	AGE - Assoc. of Gambian Entrepreneurs	N
8.	Allah Leka Jombo Kuto	N
9.†	AMA - Africa Muslim Agency	N
10.*	AMDM - Anglican Mission Development Ministries	N
11.*	AN - Africa Now	I
12.	Ananda Marga Pracaraka Samgha	N
13.†	ANFAR - National Assoc. for Religious Families	I
14.*	APSO - Agency for Personal Service Overseas	I
15.	ASHAD-African - American Society for Humanitarian Aid and Development	I
16.§	Bahai Movement	I
17.†	BCS - Brotherhood of the Cross and Star	I
18.	Blue Crescent	I
19.	British Gambian Friendship Society	I
20.*	BMTG - Baptist Mission The Gambia	I
21.*	Caritas	N
22.	CASE - Community Action for Socio-Economic Empowerment	N
23.§	CODE - Canadian Organisation for Development through Education	I

[1] Source: TANGO Secretariat, March 1992. (Addresses of the NGO's listed can be obtained from the Secretariat).

No.	Abbreviation/Full Name	National/International
24.*	CCF - Christian Children's Fund	I
25.	Celestian Church	N
26.	Christian Council	I
27.†	COP - Church of the Pentecost	I
28.*	CP - Cooperationa and Progress	N
29.*	CRS - Catholic Relief Services	I
30.*	CUSO	I
31.*	CYSARDA - Child Youth Support and Rural Development Agency	N
32.	Danish Gambian Friendship Society	I
33.*	DASH - Development Action through Self-Help	N
34.†	Exchange Crossroads Company	N
35.	Fass Youth Association	N
36.*	FFHC - Freedom From Hunder Campaign	N
	WRP: Women's Rice Project, Mansakonko	
37.*	FIOH - Future In Our Hands	I
38.	Foederkreis: Afrika Hilfe E.V.	I
39.*	FORUT The Gambia	N
40.	FTG - Friends of The Gambia	I
41.	GAICD - Gambia Assoc. for Islamic Culture and Development	N
42.*	GAFNA - Gambia Food and Nutrition Association	N
43.	Gambia-Swe Charitable Organisation	I
44.	Gambia Youth Literacy Foundation	N
45.†	GAMNCPADD - Gambia National Committee/Centre for the Prevention of Alcoholism and Drugs Dependency	N
46.†	GAMSAM	I
47.*	GARDA - Gambia Rural Development Agency	N
48.*	GBPW - Gambia Business and Professional Women	N
49.*	GFPA - Gambia Family Planning Association	N
50.†	GGGA - Gambia Girls Guides Association	N

No.	Abbreviation/Full Name	National/International
51.*	GGSM - Gambia Good Seed Mission	N
52.*	GHEA - Gambia Home Economics Association	N
53.†	GIRLS - Gambia Islamic Relief Services	N
54.	GIU - Gambia Islamic Union	N
55.	Gloria Baptist Fellowship Church	I
56.*	GOVI - Gambia Organisation of the Visually Impaired	N
57.*	GRCS - Gambia Red Cross Society	N
58.*	GRUDA - Gambia Rural Development Agency	N
59.*	GWFA - Gambia Women's Finance Association	N
60.*	GYF - Gambia Youth Federation	N
61.	HAAG - Help Age Association Gambia	N
62.	HELPERS	I
63.*	ICAM - Inner City and Africa Ministries	I
64.*	ICO - Islamic Call Organisation	I
65.	IIRO - Intern. Islamic Relief Organisation	I
66.†	IOGT - Intern. Organisation of Good Templars	I
67.	IRFF - Intern. Relief Friendship Found. Inc.	I
68.	Islamic Assoc. for Relief, Development and the Environment	I
69.	Islamic Cultural Centre	N
70.†	ISHR - Intern. Society for Human Rights	I
71.	JIDA - Jokadu Islamic Development Association	N
72.*	KETA - Kombo East Tesito Association	N
73.	Methodist Mission (Agric. Programme)	I
74.*	MRC - Medical Research Council	I
75.*	NGSFA - North Bank Sheep Fattening Association	N
76.	OIC Chamen Centre	I
77.*	PAIS - Pan African Islamic Society for Agrocultural Development	I
78.*	PATH - Progress in Action Through Home-Resources Development	N
79.*	PATW - Project Aid Third World	N

No.	Abbreviation/Full Name	National/International
80.†	Peace Corps	I
81.*	PPG - Partnership & Progress in The Gambia	N
82.*	PIA - People in Action	N
83.	PIA - Pipeline Islamic Association	N
84.§	Project Concern International	I
85.	Rawdul Quran (Garden of the Quran)	N
86.	Sahel Development Foundation	I
87.*	SCF/UK - Save the Children/UK	I
88.*	SCF/USA - Save the Children Federation/USA	I
89.	Seventh Day Adventist Church	I
90.*	SFP - Schools for Progress	N
91.	Shabibatou Ansarudin	N
92.	SHIA - Swedish Handicapped International AID Foundation	I
93.*	SS - Sight Savers/Royal Commonwealth Society for the Blind	I
94.*	SOS Children's Village	I
95.	Swedish Gambian Society	I
96.†	TBMPFS - Ti-Biray Multi-Purpose Farm Society	N
97.†	TFTF - The Forbes Trust Foundation	I
98.	The New Apolistic Church Society	N
99.	The Village Aid Project	N
100.*	VSO - Volunteer Service Overseas	I
101.*	WAM - West Africa Mission	I
102.*	WECI - World Evangelisation for Christ International	I
103.†	WIF - Foundation for Research on Women Health Production and Environment	N
104.*	WISDOM - Women in Service Development and Organis. Management	N
105.*	Worldview International Foundation	I
106.*	YFADAA - Youth Front Against Drugs and Alcohol	N
107.*	YMCA - Young Men's Christian Association	N

No.	Abbreviation/Full Name	National/International
108.†	YWCA - Young Women's Christian Association	N
109.*	Tango observer outside The Gambia: OXFAM	I

Notes:

* TANGO Member
† Applied for TANGO Membership
§ Inactive TANGO Member

Total number of NGOs in The Gambia: 108

of which national NGOs: 54
of which international NGOs: 53

Total TANGO membership: 52

of which national NGOs: 30
of which international NGOs: 22

APPENDIX II-2
THE GAMBIA VILLAGE DEVELOPMENT TRUST FUND (GVDTF) (THE FUND)[2]

ACTIVITIES AND OPERATIONS

ACTIVITIES

The main activities of the Trust Fund are:

1. To provide funding in the form of loans to village self-help groups and individuals whose nature and aims are generally consistent with national rural development policy.

2. To establish a sustainable production finance for small self-help income-generating projects and community projects in villages where Village Development Committees, groups of individuals, or individuals have articulated their needs and identified their own priorities for action, thereby reaching the most vulnerable with the resources they need.

3. To assist TANGO and National NGOs in helping their members (village groups) to obtain access to credit based on their own determination of priorities.

4. To strengthen the capacity of the Department of Community Development to respond to the many requests for project finance that are made to CDAS in their cause of work in villages.

5. To promote the formation of viable community groups which would be encouraged and supported to promote sustainable Saving and Credit Associations within their respective areas, to ensure that the provision of credit resources is linked to savings mobilization from the individuals and their groups.

6. To provide refinancing facilities to rural Savings and Credit Associations so that they can on-lend to their members to allow them to undertake income-generating activities.

7. To work closely with the line ministries and departments and all other relevant rural development agencies.

---

[2] Source: UNDP.

8. To establish linkages between UNDP assisted projects/programmes and village groups, and national NGOs that could benefit from advisory services in the areas such as:

   a. Women's horticultural production, processing and marketing;

   b. Livestock and small ruminants development;

   c. Rural water supply (including training and maintenance).

9. To support training programmes for effective functional literacy, numeracy, techniques of appraisals and of participatory self-monitoring and evaluation, campaign geared towards sensitation of the Trust Fund modalities, capacity and confidence building in the rural community on a continuing basis.

10. The Fund will solicit additional funds from wide variety of local sources, international donors, development agencies both official and non-official agencies.

ELIGIBILITY CRITERIA FOR LOANS

i. Any groups of individuals, individuals, or Rural Savings and Credit Associations involved in rural income-generating activities may be eligible for loan facility provided that the economic, technical, managerial and marketing components of the project are established to the satisfaction of the Trust Fund.

ii. Applicants for loan should not be borrowers or defaulters of any other credit agency.

iii. Applicant should be resident in the village from where loan application was made for a minimum period of six (6) months.

iv. Farmers should produce proof relating to ownership of land or right to cultivate the land from the Alkalo.

v. Applicant should have had some experience and/or ability in the activity for which loan is applied.

vi. Projects must be in keeping with objectives/provisions of the Fund regarding eligible activities and must aim at raising the standard of living of the prospective borrowers, i.e. the scale of the project should be above subsistence level.

vii. Applicant, whether individual, groups or associations, should have savings account with Savings and Credit Associations in their areas where such exists.

viii. Lending to groups will be confined to income-generating and/or employment generating activities conducted by already existing groups working together or working together with groups mutual support (as in a savings and credit group).

ix. Each group leader should be able to provide a mechanism whereby all members of the group would jointly and severally guarantee the loan when approved and also assist in the collection of repayment on due dates.

x. Members of the Board of Trustees and staff of the Fund and their families, employees of Government or other institutions or professionals are not under any circumstances eligible for credit facilities from the Fund.

LENDING PROCEDURES

Applications for loan funds can be presented to the Fund in a number of ways:

i. Direct applications from a village development committee or village group, through an extension worker from government or national NGO. The extension worker would help applicants to complete application forms to the Fund. The applications will give details of any feasibility study and whether the applicant has savings plans which should always precede an application for credit.

ii. Complete application forms will be forwarded to the Fund with the name of the extension worker who helped applicants. The extension worker will recommend the project and be expected to accept accountability for ensuring the beneficiary has access to technical on-going advice.

TYPES OF LOANS

The Fund will grant two types of loans and these would be based on the expected life of the project.

Short-term loans - 1 to 12 months.

Medium-term loans - 12 to 24 months.

i. Short-term loans are typically granted to meet production, transportation, marketing costs, working capital, etc.

ii. Medium-term loans are for purposes such as the purchase of farm equipment, livestock, and other allied enterprises, etc.

LOAN SCHEMES

The Fund has the following loan schemes

1. AGRICULTURAL LOANS SCHEME:

This scheme is meant to provide credit facilities for agricultural and allied agricultural activities;

(a) Short term loans: are granted for purchase of improved seeds, fertilizers, pesticides horticulture and for meeting expenses like labor charges and transport costs, etc.

(b) Medium term loans: are provided for purchase of agricultural implementations, farm machinery, plough animals, digging of wells, lift irrigation and sprinklers, for land development for production and processing of hybrid seeds, etc.

(c) Development loans for Allied Agricultural activities are provided for activities such as dairy, fisheries, poultry, piggery, serculture, beekeeping, rabitary, etc.

2. SMALL BUSINESS FINANCE SCHEME

Under this scheme, loans are granted for activities such as; retail trading in essential requirements of the rural community, working capital for small-scale business enterprises established by a group, an association or an individual for providing service (not professional service) manufacturing, processing, preservation, marketing. Blacksmiths, tailors, watch repairers, etc. are not in this category.

3. SCHEME TO ASSIST COTTAGE INDUSTRIES

Credit would be provided under this scheme for all artisans such as weavers, potters, etc. Soap making, tie and dye, etc. would be considered under this scheme.

LOAN LIMITS

Borrowers do not have to contribute any cash margin for first loans, as the family labor itself is treated as margin. The scale of finance varies according to project and the amount of loan the borrower gets will depend upon the scale of finance of the particular project. However, for subsequent loans, borrowers are expected to provide cash margins, which will be determined by the Fund in accordance with the loan amount.

RATE OF INTEREST

The Fund determines the annual rates of interest chargeable on its loans. These rates may change from time to time in line with the national economic and monetary policy prevailing at any particular time. However, the fund's prevailing rates of interest charged on loans ranges between 18 and 24 percent per annum.

SECURITY FOR LOANS

i. Security and/or collateral must be offered for all loans made by the Fund. This may take the form of security on livestock, farming implements, ornaments such as gold jewelry (sufficient to cover the loan with the prescribed margin) hypothecation of crops, solvent sureties of two respected elders of the village who are compound owners, or repayment capacity of the borrower, depending on terms and conditions, nature and volume of facility granted.

ii. Under the Fund's Group Credit Schemes, group loans are granted and payable at the end of each crop season or as determined by the Fund. The group leader and the executive committee members or the whole group would jointly and severally guarantee the loan when approved. The group leader and the executive members would also assist in the collection of loans when due for payment. Thus, the group pressure is applied in the administration of these schemes.

DISBURSEMENTS

i. The Fund operates a supervised credit system. Under this system approved loans are disbursed in cash or in kind or a combination of both where necessary. Cash disbursements will be made in the form of cash or cheques placed directly in the hands of the ultimate borrower(s). Disbursements through intermediaries will only be made in exceptional cases with the permission of the Trustees.

ii. Where cash disbursements are involved, disbursement of loan funds would be time-phased with conformity with the different operational phases of the life circle of the project. Under this system, each case disbursement is preceded by a field visit with a view to assessing the extent to which the previous disbursement has been applied to the successful implementation of the project. A report on the field visit is accordingly prepared with a set of recommendations advising the need for additional fund release for the project.

iii. Where disbursements in kind are concerned procurement of capital items and production inputs will be made on behalf of the borrower(s) by the Fund only after the borrower(s) have identified the implements or inputs required for the project and instruct the Fund to purchase such items (as per invoice produce) on their behalf.

iv. Disbursements either in cash or in kind shall be made only after the loan agreement is completed, security created and guarantors have honored their commitment.

v. Requests for disbursements should be made on a standard form prepared and completed by the Fund.

vi. All disbursements should be authorized by the Fund Coordinator.

LOAN COLLECTION AND RECOVERY PROCEDURES

i. Loan repayment period shall depend on the activity and scale of finance. However, the Fund shall specify repayment schedules for each loan approved.

ii. All loan repayment will be transmitted directly from the borrower(s) to the Fund in a manager to be determined by the Fund.

iii. As for group loan schemes, the group leader and the executive committee members would assist the Fund staff in collection of loans from group members when due for payment.

iv. Borrower(s) shall be reminded, by way of a letter, one (1) month in advance of their upcoming repayment on a loan.

v. Should borrower(s) not honor their obligations on the specified date nor submit a report of inability to repay a loan on time, then a second remind or "warning" letter shall be sent to the borrower(s) requesting payment within one (1) week of receipt of the letter.

vi. The Fund shall, in exceptional cases, consider rescheduling the repayments if, for reasons considered tangible by the Fund, the borrower(s) cannot meet repayments. Evidence must, however, be provided to support and justify recommendations for rescheduling.

vii. Should all attempts, including persuasion and consultation with borrower(s) to ensure that repayments are made, to recover a loan fails then legal action shall be recommended to recover outstanding loan funds.

DEFAULTS ON REPAYMENTS

i. Failure to pay a loan, or any installment, when due shall constitute default and in such cases the outstanding amount, including interest plus a penalty charge of 25%, shall immediately become due and payable.

ii. Occurrence of adverse circumstances which the Fund solely determines as prejudicing the repayment of the loan (e.g. using loan funds for other purposes) would be considered as default and the Fund's default rules shall apply.

iii. The Fund or its assignee shall have full powers and authority upon default in any of the terms of this obligation of the rules of the Fund in relation to its installment plan account, or at any time the Fund shall deem itself insecured to declare without notice this obligation and payable forthwith. Thus, the Fund shall apply to the payment of the loan any and all securities and things of value which were offered as security for the loan.

iv. In case it is necessary to take legal action for the collection of any loan, the borrower and/or guarantors shall pay the full costs involved in this transaction.

v. Defaulters shall not be granted any other loan facility from the Fund, nor could they serve as personal guarantors to borrowers from the Fund.

SUPERVISION

On approval and subsequent disbursement of loans and grants, regular follow-ups will be conducted by extension workers and staff of the Fund to assess progress, check on the inputs and identify pending problems. Where possible, officers may on the spot advise and/or assist the beneficiary to find solutions to the problem. In all cases, an official report will be prepared indicating the status of the project and the area where assistance is required to improve its operational performance.

CHAPTER THREE

THE GAMBIA COOPERATIVE UNION

by

Geetha Nagarajan

Douglas H. Graham

and

Richard L. Meyer

Table of Contents

I. INTRODUCTION 1

II. METHODOLOGY OF THE STUDY 3

III. ANALYSIS 4

1. Pre-Reorganization Period (Pre 1988): An Outline 4
   - A. The Origin 4
   - B. Functions 4
     - a.) Output markets 5
     - b.) Input markets 5
     - c.) Financial markets 6
       - i) Loans through the CPMSs 6
       - ii) Savings through CPMSs 8
       - iii) The CTCSs 8
       - iv. Summary 9

2. Post-Reorganization Period (Post 1988) 12
   - A. Output markets 12
   - B. Input markets 13
   - C. Financial markets 14
     - a.) Loans 15
     - b.) Savings 21

IV. STRENGTHS, WEAKNESSES, PROBLEMS FACED AND PROPOSED CHANGES BY THE GCU 22

1. Strengths 23
   - A. Output market 23
   - B. Input market 23
   - C. Financial market 23

2. Weaknesses 24
   - A. Output Market 24
   - B. Input Markets 24
   - C. Financial Markets 24

3. Problems Faced 26

4. Plans for the future 27

54

V. CONCLUSIONS AND RECOMMENDATIONS 28

1. Introduction 28

2. Scenario One: The Optimal Mix of Market Conditions, Agent Behavior, and Institutional Security 29
   A. Strengthening of the ADP II Fund 30
   B. Reserve Funds 30
   C. Portfolio Diversification 30
   D. Savings Mobilization 31
   E. Member Education 31
   F. CPMS Network 31

3. Scenario Two: The Unfavorable Mix of Market Conditions, Agent Actions, and Institutional Instability 32
   A. Guarantee fund 32
   B. CPMS network 32
   C. Reserve fund at the GCU to offer competitive output prices .. 33

4. Conclusion 34

References 32

List of Tables

Table III-1 Groundnuts: Production, Quantity Delivered to GPMB by Source, and Producer Prices in The Gambia and Senegal, 1974 to 1992. 39
Table III-2 Volume of Loans Issued, Seasonal and Medium Term to CPMSs, 1981-1992. 40
Table III-3 Interest Rates Charged to GCU, CPMS and Members by Various Sources, 1980-1992. 41
Table III-4 Operational Status, Membership Structure, Capital Base and Loans Issued for Selected CTCSs, as of October 1987. 42
Table III-5 Operational Status, Loans Outstanding and Capital Base of Individual CTCS. 43
Table III-6 Sources of Funds for the Credit Program at the GCU, 1981-1992. ... 45
Table III-7 ADP II Funds: Loans Outstandings and Disbursements for Agricultural Input Loans made by GCU. 45
Table III-8 Number of CPMS and Village Branches that Qualified to Receive Input Loans from the GCU, 1988-1992. 46
Table III-9 Number of Qualified CPMS and Village Branches by Geographic Location, 1988-1992. 46

155

Table III-10 Number of Qualified Village Branches by Age of the Branches, 1989-1992. 47
Table III-11 Total and Average Volume of Short Term and Medium Term Loans Disbursed, 1988-1992. 47
Table III-12 Volume of Loans Solicited and Approved by CPMS, Village Branches and Applicants during 1991-92 Cycle. 48
Table III-13A Determinants of Loan Size Rationing: Results of the Correlation Coefficient Analysis. 50
Table III-13B Determinants of Loan Size Rationing: Results of the Regression Analysis. 50
Table III-14 Average and Total Volume of Short Term and Medium Term Loans Disbursed to New and Old CPMS and Village Branches, 1988-92. . . . 51
Table III-15 Repayment Performance on Current and Loans Overdue, 1981-1991. . 52
Table III-16 Repayment Performances on Current Loans and All Loans Outstanding for the CPMS that Qualified for 1990-91 Loans from the GCU. 53
Table III-17 Sampled CPMS: Qualification Status, Membership Size, Village Branches, Loans Issued and Repaid, and Groundnut Purchased in 1991-92. 54
Table III-18 Alternative Roles of Key Agents on GCU Operations. 55

List of Figures

Figure III-1 Commodity (Input and Output) and Credit Flows through the Gambian Cooperative Union (GCU) in the Post ERP Period 56

List of Appendices

Appendix Table III-1 List of the CPMS Sampled by Their Status of Qualification in the Credit Program and Geographical Location. 57
Appendix Table III-2 Name and Location of Samples Villages in which Farmers/Kafos were Interviewed. 57
Appendix Table III-3 Number of CPMS Affiliated with the GCU, 1964-1992. . 58
Appendix III-4 Lending Conditions and Eligibility Criteria for the 1991/92 Agricultural Season 59
Appendix Table III-5 List of CTCSs that Qualified in 1989 to Form CUs. 63
Appendix Table III-6 Growth of Village Branches that Qualified for Loans from GCU, 1988 to 1992. 64

156

ACRONYMS USED IN CHAPTER THREE

ADP	Agricultural Development Program
CBG	Central Bank of The Gambia
CC	Consumer Cooperatives
CMR	Compulsory Management Regime
CPMS	Cooperative Produce Marketing Societies
CTCS	Cooperative Thrift and Savings Societies
DOC	Department of Cooperation
ERP	Economic Recovery Program
FAO	Food and Agriculture Organization
FC	Fisheries Cooperatives
GCDB	Gambia Commercial Development Bank
GCU	Gambia Cooperative Union
GOG	Government of The Gambia
GPMB	Gambia Produce Marketing Board
GRT	Gambia River Transport
HC	Handicrafts Cooperatives
HCO	Horticultural Cooperatives
ILCUF	Irish League for Credit Unions International Development Foundation
NACUG	National Association of Credit Unions in The Gambia
NTC	National Trading Corporation
PBCP	Production Based Credit Program
PPMU	Project Planning and Monitoring Unit
RDP	Rural Development Project
SCB	Standard Chartered Bank
VBGLS	Village Based Group Lending System
VSACA	Village Savings and Credit Association
VRS	Village Responsibility System
WHC	Women's Horticultural Cooperatives
WOCCU	World Council of Credit Unions

157

CHAPTER THREE
THE GAMBIA COOPERATIVE UNION*

I. INTRODUCTION

Beginning in 1988, The Gambia Cooperative Union (GCU) became a privatized farmer owned cooperative primarily involved in providing input and output marketing services to its members. Prior to privatization, the GCU was an affiliate of The Gambia Produce Marketing Board (GPMB), a government parastatal. The privatization of the GCU was due in part to the recommendations of the World Bank following the implementation of the Economic Recovery Program (ERP) by the Government of The Gambia in 1985. The ERP recommended: (i) liberalization of the market for production inputs, especially fertilizer; (ii) liberalization of output markets; (iii) encouragement for private entrepreneurs to enter into both input and output markets, and; (iv) deregulation of financial markets.

The ERP and the ensuing structural adjustment measures had profound implications for the GCU. Prior to the ERP, the GCU was the primary buyer of groundnuts and supplier of inputs on credit in The Gambia. It was affiliated with the GPMB that enjoyed a monopoly in the importation of inputs, processing and exports of groundnuts. The operations of the GCU in the input, credit and output markets were heavily subsidized by the government and the GPMB. While inputs were sold at very low subsidized prices, they were generally not available on a timely basis; output prices for groundnuts were set below world market prices; loans were rationed at below market rates and loan repayment rates were very low. In short, the GCU's operations were inefficient and inviable, unable to be sustained except through large subsidies. Several factors were identified as contributing to its poor performance including mismanagement of the GCU, inadequate macro-economic policies, inappropriate input and output price policies in The Gambia, political intervention and frequent droughts. Therefore, the World Bank recommended several changes to facilitate its reorganization. These changes eventually removed the monopoly status of the GPMB in output and input markets, withdrew government subsidies to the GCU, reorganized the GCU credit operations emphasizing strict credit discipline and a village branch lending program, and divested from the GCU certain multipurpose activities.[1]

---

* We acknowledge with appreciation the valuable assistance provided by Baboucar Gai, GCU; E. Brewis, GPMB; Graham Yates, SCB; Binta Khan, GCU; Pa Sinyang, GCU; Karamo Trerra, GCU; Managers of sampled CPMSs and several farmers in conducting this study. The usual disclaimers apply.

[1] The GCU operated as an apex cooperative body to promote, establish, support and monitor several multipurpose cooperatives including the 84 Cooperative Produce Marketing Societies (CPMS), 90 Cooperative Thrift and Savings Societies (CTCS), Fisheries Cooperatives (FC), Handicrafts Cooperatives (HC) and Consumer Cooperatives (CC). The ERP recommended that the GCU withdraw from supporting the CTCS, FC, HC, and CC and only work with the CPMSs.

156

Based on these recommendations, the GCU reorganized its management system and marketing operations in 1988/89. Since then, it has undergone significant changes, especially in its credit department responsible for supplying seasonal and medium term credit to its members. The recent performance of the GCU has been noteworthy. The GCU now functions as an importer and distributor of agricultural inputs, supplier of cash and in-kind loans, mobilizer of deposits, and buyer and exporter of groundnuts. It plays a major role in distributing agricultural inputs through seasonal and term loans to its members at market rates. Table II-2 shows that the value of inputs supplied by the GCU on credit accounted for nearly 51 percent of total agricultural loans issued to the agricultural sector during the 1991-92 crop season. It was also the primary domestic buyer of groundnuts in 1991-92.[2]

The impressive share of the GCU in the input, credit and output markets in the presence of alternative suppliers and buyers in the current liberalized environment reflects its competitive edge. In addition, its large network with wide rural penetration, established infrastructure, long experience in the input, credit, savings and output markets, and established links with formal banks gives it an important role in The Gambia. Its past poor performance, however, raises concerns about its capacity and to continue to effectively supply marketing services in a liberalized environment.

Several studies have examined the output and input market operations of the GCU from 1955 to 1988 in great detail.[3] The recommendations of these studies were used to reorganize the GCU. However, there has been little analysis of the performance of the reorganized GCU. The objective of this chapter, therefore, is to only summarize elements of the earlier studies, but to examine in detail the performance of the GCU after its 1988 reorganization in its savings and lending activities. Since a complete examination of the multifaceted and complex operations of the GCU would require a more detailed examination, this chapter is limited to documenting the performance of the current credit and savings unit and to exploring its potential to become a viable and self-sustaining supplier of financial services in a liberalized economy. Since GCU loans are often supplied in kind and the loan obligations are enforced through deductions from output sales, some discussion of both the input and output markets will also be presented when necessary to understand it's financial operations.

This chapter is organized as follows: first we describe the methodology of the study; second, we analyze the performance of the GCU in output, input and financial markets before and after its reorganization; third, we discuss the strengths and weaknesses of the GCU's current credit and savings program and its proposals for the future and, finally, we offer a set of policy recommendations in the last section.

---

[2] It purchased 8,000 tons of groundnuts compared to 2,000 tons by the GPMB.

[3] Examples include the FAO funded "Agricultural Credit Policy and Structure in The Gambia" (1986), the ILO funded study by R. H. Clark (1987), and the USAID funded study by Demissiee, et. al., (1989).

II. METHODOLOGY OF THE STUDY

Currently, the GCU is an apex cooperative organization with 54 affiliated CPMSs. The CPMSs are in turn responsible for several village branches attached to them. Therefore, this study was conducted at three levels, the GCU, the CPMSs and the village branches, to fully examine the GCU's operations and assess its capacity as an input supplier, output buyer and financial intermediary.

The GCU: At the GCU level, the data compiled from the individual CPMSs were examined and relevant information was extracted for this study. Specifically, these data included the total number and the names of the CPMSs and the village branches registered with the GCU that qualified for the credit program, the volume of loans issued through the qualified CPMSs, both seasonal and medium term, and the repayment rates on current and overdue loans from the qualified CPMSs and for all CPMSs for the four years from 1988 through 1991. In addition, information was also collected on the volume of inputs imported and distributed, the volume of groundnuts purchased and exported, input prices and output prices offered by the GCU from 1988 through 1992. Several annual reports, consultant reports and memorandums were also consulted to learn about the GCU's marketing operations and problems during the past several years. Furthermore, informal meetings were held with several officials at the GCU to obtain their interpretation of GCU's recent efforts and problems faced in reorganization.

CPMSs: A total of 14 CPMSs were visited personally by the senior author during April 1992 to assess their current capacity in terms of physical infrastructure, area and size of operations, major constraints faced, managerial capabilities, and the nature of accounting procedures used. A list of CPMSs visited is provided in Appendix table III-1. These 14 CPMSs were purposely selected based on their geographic location, past loan repayment performance and output purchases. Efforts were made to contact at least one qualified and unqualified CPMS for the credit program from each of the seven geographic zones or circles. However, attrition was inevitable due to logistical constraints. Informal interviews were carried out with the managers of the CPMSs to gather information on the size of operations, membership structure, volume of loans issued and recovered, problems faced in terms of GCU's management, farmer clients and infrastructure facilities, and their opinions about the reorganized structure of the GCU and suggestions for further improvement. These interviews were facilitated by the fact that all managers were able to communicate in English.

Village branches: Groups of farmers were interviewed from 14 village branches attached to the sampled CPMSs, one each for each of the sampled CPMS. Information was gathered about farmers' attitudes toward the GCU and alternative sources of input supplies, financial intermediaries and output buyers. The list of villages sampled for this study is provided in Appendix table III-2. Two village committees appointed under the Village Responsibility System (VRS) were also interviewed to understand the borrower screening

and loan recovery procedures followed in conjunction with their parent CPMSs. Since the information gathered was sensitive, the interviews were conducted on an informal basis and in groups without any direct reference to an individual member of the cooperative.

III. ANALYSIS

1. Pre-Reorganization Period (Pre 1988): An Outline

A. The Origin

The Gambia Cooperative Central Banking and Marketing Union (GCCBMU), precursor to the current GCU, was formed in 1959 as a financial institution to provide savings and credit services to its affiliated cooperative societies. Beginning in 1971, the banking services were transferred to the GCDB and the GCCBMU was reorganized as the GCU to function as an apex cooperative body to promote, establish, support and monitor several multipurpose cooperatives such as Cooperative Produce Marketing Societies (CPMS), Cooperative Thrift and Savings Societies (CTCS), Fisheries Cooperatives (FC), Handicrafts Cooperatives (HC) and Consumer Cooperatives (CC). It was a quasi-independent organization that was supposedly managed by a committee elected by its members.[4]

B. Functions

While the GCU was responsible for several cooperatives, the primary emphasis was on supplying inputs, financial (credit and savings) and output marketing services to its members through 86 CPMSs.[5] The other cooperatives, such as the CTCSs, were adjunct operations.

The input, credit and output market operations were usually subsidized by the government and several government parastatal entities such as The Gambia Produce Marketing Board (GPMB), The Gambia Commercial Development Bank (GCDB) and The

---

[4] The GCU was expected to be an independent organization managed by a committee elected by its members. However, the heavy involvement of the government and government parastatals in GCU's operations limited its independence. Furthermore, because of the misappropriation of funds in the late 1960s and early 1970s, the minister of agriculture dissolved the old committee and appointed a new management committee in 1974. The new management committee was appointed on a short-term basis but it lasted until November 1989. This Compulsory Management Regime (CMR) reduced control of the regional CPMSs on their operations and shifted the decision making process for their operations to the central office (see Demissiee, et. al., 1989 for further information).

[5] See Appendix III-3 for the growth of the CPMSs over the period 1964-1992.

Gambia River Transport Ltd. (GRT) that collaborated with the GCU in the provision of marketing services.

On the one hand, the GCU primarily purchased groundnuts through the CPMSs and sold these to the GPMB which operated as a monopolist in the processing and exporting of groundnuts. On the other hand, production inputs were sold to the GCU by the GPMB who was also a monopolist in importing inputs. The GCU was financed by the GPMB and GCDB to conduct its input and output marketing functions. The GCU in turn sold the inputs to farmers for cash and on credit, extended cash loans, mobilized savings and purchased groundnuts from its members through its affiliated CPMSs and their village branches.

a.) Output markets

The GCU was the major domestic purchaser of groundnuts in The Gambia during this period. Since the GPMB was the only processor and exporter, all the groundnuts purchased by the GCU were sold to the GPMB. The producer prices offered by the GCU were fixed by the GPMB in consultation with the Government of The Gambia. The GCU was given a buying allowance from the GPMB as a commission. Table III-1, column 6 shows that the share of the GCU in the GPMB's total purchases ranged from 42 to 81 percent and GCU purchased nearly 60 to 70 percent of the total groundnuts produced in The Gambia until 1986/87.[6] Output buying was conducted through the widespread network of the 86 CPMSs located throughout the country. Each CPMS in turn purchased nuts from its several village branches that serviced about 20,000 farmer members in total. The GCDB extended a credit line each year to the GCU to purchase groundnuts from the farmers.[7]

b.) Input markets

The GCU was also the primary distributor of agricultural inputs including fertilizer, seeds, pesticides, and agricultural machinery and implements in The Gambia during this period. Alternative sources of inputs were limited to scattered private traders who were involved in illegal cross border trade with Senegal.[8] The GCU purchased inputs on zero interest credit from the GPMB. The GPMB deducted the input loans from the proceeds of the groundnuts delivered by the GCU at the end of the year. The GCU then sold the inputs on credit to the CPMSs who in turn sold them on cash and credit to their farmer members.

---

[6] In general, the farmers reserved 20 to 25 percent of their output for seeds and consumption purposes, and the rest was sold to output buyers.

[7] The GCDB in turn was refinanced by the Central Bank.

[8] See Chapter VII for details.

162

Although data on the quantity of inputs supplied were not available, Table III-2 presents the volume of input loans, seasonal and medium term, issued by the GCU to the CPMSs to be onlent to their members. Fertilizer, seeds and pesticides were supplied as in-kind loans. The interest rates charged to the GCU, CPMSs and members from the several sources of suppliers involved in input marketing are presented in Table III-3. The table shows that the GCU received subsidized loans until 1984 to distribute inputs on credit. The inputs were also supplied to the CPMSs and farmers interest free until 1984 and were charged a below market rate until 1986.

c.) Financial markets

The GCU provided financial services through two types of cooperatives: the CTCSs and CPMSs. While the CTCSs were adjunct operations, the CPMSs were the major outlets for supplying financial services to farmer members. The loans made through the CPMSs were supplied in cash and in kind with the objective of increasing their member's marketable surplus thereby increasing the volume of output sold to the GCU. The savings mobilized through the CPMSs, however, were insignificant. This section first examines in detail the performance of the GCU as a financial intermediary through the CPMSs and then follows with a brief review of the CTCSs.

i) Loans through the CPMSs

From 1959 until 1978, the GCU supplied small unsupervised cash loans to its members. Although detailed data were not available, the loan repayment rate was reported to be 97 percent (Clark, 1987). This credit program was supported through subsidized loans from the GCDB.

In 1979, the Production Based Credit Program (PBCP) was introduced to supply loans in kind. The PBCP was funded by the Rural Development Project I (RDP I) of the World Bank to increase cash and food crop production in The Gambia. A total of $11.7 million was contributed towards the RDP I fund by the Overseas Development Agency and the International Association of the Arab Bank for International Development. Loans worth D4.75 million were made in the form of fertilizer, seeds and farm implements to members of the CPMSs.[9] While beneficiary coverage was impressive, poor planning and implementation, political interference, and the drought year of 1981/82 led to a poor loan recovery rate of less than 50 percent. Loans outstanding as of October 31, 1986 stood at D2.89 million on medium term loans and D0.87 million on seasonal loans.[10] Therefore, the program under RDP I was terminated in 1982.

---

[9] Many loans were, however, issued to nonmembers with minimum record keeping.

[10] RDP I records of September 30, 1986, however, showed that outstandings were D 4.44 million and D 1.0 million under medium and seasonal loans, respectively. The differences in figures underscore the poor record keeping procedures followed under the credit programs.

In 1982, the Agricultural Development Program I (ADP I) was implemented by the World Bank to consolidate the progress made under RDP I with the objective of increasing agricultural production of export and food crops through strengthening support institutions. Table III-2 shows the volume of loans issued and the loan repayment rate under RDP I and ADP I. The ADP I supplied cash loans while RDP I supplied in kind loans. Surprisingly, the loan repayment rates improved from 55 percent under RDP I in 1980/81 to 89 and 60 percent, respectively, under ADP I in 1982/83 and 1983/84 (column 6). While it is tempting to attribute the improved loan repayment performance to the cash loan approach followed under ADP I, good weather conditions and favorable real groundnut prices during the 1982-84 period compared to 1981 very likely should have contributed substantially to the repayment trends (see columns 2 and 9 in Table III-1 for groundnut production and producer prices during the 1980-84).

Based on the relatively positive experience of ADP I, a consolidated credit program was implemented as ADP II in 1984. The objectives of the ADP II included, among others, financing the GCU to distribute farm inputs.[11] The ADP II was funded by interest free loans from the World Bank, IFAD, and gifts from the Government of Italy.[12] A revolving fund worth of D8 million was established by the GCU to finance the procurement and distribution of inputs.

Using the lessons learned from RDP I and ADP I, ADP II included a reorganization of the GCU's management establishing an agricultural credit unit responsible for loan processing, disbursement and collection. The GCU supplied loans in kind and cash to the CPMSs which then onlent to their members in cash and kind. The CPMSs tied the loans to the borrower's output sales and the loans due were deducted from the borrowers' sale proceeds. A minimum loan repayment rate of 85 percent was made mandatory for each CPMS in order for them to receive further loans from the GCU.

Table III-2 shows that loans were issued in cash and in kind under the ADP II. While the repayment rate was low in 1984/85 and 1986/87 which were years of droughts, it fluctuated until 1988.[13] The implementation of ADP II also had difficulties. The majority of the CPMSs could not attain an 85 percent repayment level set by the ADP II

---

[11] The other objectives of ADP II were to: (i) assist the government extension agency, Ministry of Agriculture, and Project Planning and Monitoring Unit (PPMU); (ii) improve infrastructure to conduct agricultural research; (iii) assist the government to remove fertilizer subsidies; (iv) improve the seed multiplication unit at Sapu, and; (v) provide financing to improve groundnut storage facilities.

[12] The ADP II was implemented at a cost of $30 million and was financed by loans from the WB/IDA ($8.9 mill), IFAD($4.75 mill), and gifts from the Government of Italy ($9.5 mill).

[13] The better loan recovery rate from 1984 to 1988 compared to earlier years was probably due to the increased prices for groundnuts in the Gambia as reported in Table III-1. This was due to explicit policy initiatives in the post ERP policy environment dramatically increasing groundnut prices to keep up with Senegalese price trends (see McPherson and Radelet, 1991).

164

to qualify for further loans from the GCU. For example, in the drought year of 1984, some CPMSs repaid less than 1 percent of their current loans. Nonetheless, due to political intervention all CPMSs received new production loans in 1985 so the GCU's credit program became inefficient and inviable.

The GCU's inability to implement its credit programs efficiently and independently induced the World Bank to critically evaluate its performance in 1986. Poor management of the GCU, inadequate macroeconomic policy, political intervention, lack of government commitment to remove price subsidies, and uncertain weather conditions were found to contribute to the GCU's poor performance in its credit programs (Clark, 1989).

ii) Savings through CPMSs

The GCU has also mobilized savings from its members through the CPMSs since 1959 but the volume of savings mobilized was inconsequential compared to the loans issued.[14] For example, the volume of savings mobilized by the 84 CPMSs at the end of 1986 was D0.6 million compared to D11.8 million in loans issued.

iii) The CTCSs

A total of 90 CTCSs were created from 1955 onwards by the GCU throughout the country to provide loans and savings to their members.[15] These CTCSs functioned as local units for the GCU to mobilize savings and supply loans.[16] Nearly 85 percent of the CTCSs were made up of women members involved in petty trading and microenterprises.[17] The majority of the CTCSs were urban based and were concentrated in peri-urban areas.

---

[14] The savings mobilized by the CPMSs are treated separately from those of the CTCSs. There was presumably some overlap of members between the CTCSs and CPMSs.

[15] The GCU was primarily involved in supplying agricultural input, output, credit and savings services through the 84 CPMSs established throughout the country. The CTCSs were adjunct operations. Therefore, the credit and savings services to CPMSs are to be treated separately from those of the CTCSs even though there might be overlaps of membership.

[16] Although the CTCSs were the responsibility of the GCU, about half were registered with the Department of Cooperation (DOC). The DOC formalized the existence of the CTCSs, established by-laws for the provision of financial services, and allegedly monitored the operations of the member CTCSs through field inspectors and educated them on financial issues.

[17] The members involved in farming and market gardening accounted for less than 20% of the members of the CTCSs.

165

Each CTCS was managed by an executive committee with technical support from the GCU.[18] The savings mobilized in each CTCS were transferred to the central office of the GCU. The GCU paid an annual interest of 8 percent to the CTCSs and extended them overdraft facilities at 10 percent per annum. The funds deposited by each CTCSs were partly used by the GCU to issue loans to each of them. However, loans were provided by the GCU to the CTCSs regardless of the level of their deposits. For example, the savings mobilized by the 90 CTCSs by the end of 1986 was about D 207,500 while the outstanding balance of loans from their members was D 371,500. Although Table III-4 provides information on only 50 CTCSs out of the 90, it shows that the ratio of loans to their capital base as of 1987 (shares and savings) was 116 percent.[19] Whenever the loan demand exceeded the savings mobilized by a CTCS, the GCU covered the gap with its funds. In short, the GCU supported these CTCSs and the majority of them were dependent on the GCU for their financial operations. Little importance was given to the mobilization of local savings to sustain the CTCS's operations.

The CTCSs paid an annual interest of 8 percent on deposits received from their members and charged 12 percent per annum for loans; both were very negative real rates of interest at this time. While the bylaws stated that the members were allowed to borrow twice the value of their savings, the CTCSs were not particular on the proportion that linked members' savings with their loans. Indeed, the majority of the members joined the CTCSs mainly to get access to loans.

The loan recovery performance of these CTCSs was poor. Information on individual CTCSs in column 5 of Table III-5 shows that the majority were faced with severe problems of overdue loans. Table III-4 indicates that the percentage of overdue loans to outstanding loans and capital base in the aggregate were 54 and 63 percent, respectively. These figures indicate that these CTCSs were not viable, self-sustaining units but were functioning with external support from the GCU. The CTCSs were, therefore, a burden on the GCU resources and were not contributing to its viability. This led to the World Bank recommendation that the GCU divest itself from the operations of the CTCSs.

iv. Summary

In short, the financial intermediation by the GCU was one sided and the credit programs were poorly implemented and inviable. Therefore, the World Bank once again suggested measures in 1988 designed to improve the efficiency and the financial viability of the GCU. The recommendations stated the following:

---

[18] Eight full-time managers were employed by the GCU to provide free managerial assistance to these executive committees.

[19] The information is limited to only 50 CTCSs that maintained records on their transactions.

- The Government of The Gambia should not interfere with the GCU's operations but should improve the overall policy environment with respect to pricing, marketing and input distribution;

- The Government should absorb the GCU's debt with the GCDB and the GPMB worth D 53 million. This would enable the GCU to write off debts owed to it by its member CPMS and become solvent to start a new credit program from 1988 onwards;

- The GCU must withdraw its support to the CTCSs and other cooperatives and should restrict itself to working with the CPMSs to conduct its input, output and credit market operations;

- The capacity of the GCU should be upgraded so it can manage a viable and self-sustaining credit program. This requires reorganization of the credit unit by employing competent staff to develop, document and implement credit programs at all levels. Technical assistance should be sought by collaborating with other extension and research agencies;

- Each CPMS should be treated as an autonomous enterprise responsible for loan allocation and collection from its members. The CPMSs should be assisted by the village branches. A Village Responsibility System (VRS) should be introduced to incorporate decision making and disciplinary functions at the village level in order to improve borrower screening and loan contract enforcement by the CPMSs and the GCU;

- Farmer attitudes towards credit use must be improved through member education and the imposition of strict credit discipline.

The World Bank recommendations were implemented by the GCU in 1988/89. The Government of The Gambia paid off D53 million of GCU's debt to the GPMB and the GCDB, and withdrew further support to the GCU. Thus, it bailed out the GCU from the past debt obligations and reorganized it as a fully privatized cooperative, thereby ending its previous status as a government supported quasi independent cooperative. With its privatization in 1988, the GCU began to operate in a competitive market environment. Significant changes were made, especially in the credit unit, and several measures were taken to run a cost efficient program. These measures included:

- The divestiture from the GCU of its responsibilities with the CTCSs, FC, HC and other cooperatives in 1989;[20]

---

[20] The GCU closed its CTCS unit at its headquarters in June 1989 and withdrew its support to the CTCS network beginning in 1990. The CTCSs were informed of the GCU's withdrawal and were given the option to continue their operations but without any external support from the GCU. Obviously, many CTCSs were unable to function independently. Therefore, out of the 90 CTCSs, 23 opted for voluntary liquidation. Of the remaining 67 CTCSs, 43 non-registered and 11 registered but dormant societies were closed by the GCU in September 1990 and handed over to the Registrar of Cooperatives for liquidation. Four CTCSs that primarily consisted of

- A reduction in the number of CPMSs from 86 to 54. Thirty-two (32) nonperforming CPMSs were either closed or merged with neighboring CPMSs;

- A reduction in operating costs through a reduction in staff size from 178 to 132, unnecessary vehicle usage and foreign travel;

- Increasing revenue by exploring possibilities for improved markets for groundnuts, the sale of idle assets[21] and hiring out idle transport facilities;

- Producing audited financial reports for 1989/90;

- Fixing strict eligibility criteria for the CPMSs, village branches and their members to become eligible for loans from the GCU. The Village Responsibility System (VRS) was introduced on a pilot basis in five CPMSs.

The next section evaluates GCU's performance in the input, output and financial markets following reorganization.

---

women vegetable growers were passed on to the Horticultural Cooperatives (HCO). Only nine CTCSs qualified to continue their operations on a self management basis. They were basically urban oriented and dominated by women members and dock workers (see Appendix III-8 for the list of the nine CTCSs). The GCU agreed to reconcile the deposits held by the nine CTCSs that continued after 1990. The accounts were to be handed over to the management committees of those CTCSs.

An ILO study conducted in March 1990 concluded that the majority of the former CTCSs were nonviable units and were unable to function without any external technical and financial support. The study recommended the CTCSs to operate as credit unions (CUs) to get access to external support. Five former CTCSs agreed to function like CUs. With those five former CTCSs, The National Association of Credit Unions in The Gambia (NACUG) was established in August 1991 with the help of the Irish League for Credit Unions International Development Foundation (ILCUF) and the World Council of Credit Unions (WOCCU). The NACUG was established to assimilate viable CTCSs into the CU movement and to form new CUs to provide financial services (savings and credit) in The Gambia. The NACUG was initially formed with five former CTCSs each paying a D 200 as an entrance fee to become a CU. Currently, it has expanded to 18 CUs of which seven were former registered as CTCSs. Of the 18 CUs, ten are urban based while eight are rural based. The 18 CUs consists of 398 individual members. A total of D 15,000 was reported mobilized from these 18 CUs as of March 1992. The individual members of the CUs were paid an 8 percent annual interest rate on their deposits and a zero rate on shares. None of the 18 CUs was issuing loans to its members at that time.

[21] The assets that were sold included share holdings with the GCDB and the National Trading Corporation (NTC), some premises in Banjul, redundant trucks, personnel carriers and stocks of their spare parts, and stocks of various commodities.

2. Post-Reorganization Period (Post 1988)

The GCU began to reorganize as a privatized farmer owned cooperative in 1988/89. It was expected to operate in a competitive environment without preferential status. The major institutional accomplishment of the recent economic reforms that delinked the GPMB, the GCU and the GCDB from subsidized credit contributed to the independence of the GCU. Currently, the GCU functions as an importer and distributor of inputs, a supplier of seasonal and medium term loans in cash and in kind, a mobilizer of deposits, and a buyer and exporter of groundnuts. These multifaceted and complex activities are conducted through 54 CPMSs located throughout the country. Significant progress has been made but several problems remain that impede its viability and self-sustainability. The following section examines the recent performance of the GCU to assess the effects of reorganization and identify the constraints faced in implementing several of the proposed changes. The focus of attention is the operations of the GCU in financial markets.

A. Output markets

The GCU still remains the major domestic buyer of groundnuts in The Gambia.[22] While Table III-1 shows that it sold most of the groundnuts purchased to the GPMB, it began to export groundnuts beginning in 1992.[23] The GCU purchased about 8,000 tons of groundnuts in the 1991/92 season (10 percent of total production) compared to 2,000 tons by the GPMB (2 percent of total production) despite intense price competition from Senegalese traders. While the groundnut prices offered in 1992 by the GCU to producers reflected world market prices, the Senegalese traders paid 55 percent more than the GCU.[24]

The output purchases by the GCU were financed by the GCDB in 1989/90 and by the Standard Chartered Bank from 1990/91 onwards.[25] For the 1990/91 and 1991/92 seasons, the GCU received lines of credit from Standard Chartered for D12 million and D6 million, respectively, at a 27 percent annual interest rate to purchase groundnuts. The pledging of its property holdings as collateral was required. The GCU was prompt in repaying its crop loans to the Standard Chartered Bank.[26]

---

[22] Currently, the domestic output buyers include the GPMB, private traders registered with the GPMB, the GCU, and unregistered private traders.

[23] The GCU entered into an export contract with Senegal to deliver up to 20,000 tons of groundnuts by May 1992. It actually delivered 8,000 tons.

[24] The GCU paid D1550/ton compared to D2400/ton paid by Senegalese traders.

[25] A credit line worth of D4 million was extended by the GCDB at 24 percent annual interest rate in 1989-90. The credit line was D28 million in 1988-89.

[26] Informal interviews with the officials at the Standard Chartered confirmed this information.

While the GCU's 1991/92 performance indicates its ability to compete with Senegalese traders and honor its export and credit contracts, there are serious concerns regarding its sustainability. Interviews with the managers of the sampled CPMSs and farmers revealed that the GCU will lose its share of the groundnuts market if the current large differentials in groundnuts prices offered by the GCU and Senegal continues in the future. Whereas some loyal cooperative members sold to the GCU this year, they said that they might shift to Senegalese traders if future price differences are more than D400/ton. This has serious implications for the loan contract enforcement mechanism followed by the GCU since several members sell groundnuts to the GCU to repay their input loans. With alternative buyers offering higher prices, it will be difficult for the GCU to recover their loans through its role as a groundnut buyer. While the cooperative members should have cash to repay their GCU loans when they sell to outsiders for a higher price their actual repayment is subject to uncertainties. Furthermore, since several alternative sources supply inputs on credit, some farmers may discontinue buying future inputs from the GCU and stop repaying their loans through groundnut sales to the GCU at the current distorted price structure for groundnuts. Therefore, the ability of the GCU to continue to supply inputs and purchase groundnuts will depend greatly on the nature of future Senegalese pricing policies.

B. Input markets

The GCU is still one of the major supplier of inputs despite the emergence of several competing alternative supply channels in The Gambia. In 1991/92, it is estimated that the GCU distributed 30 percent of the fertilizer consumed and nearly 60 percent of agricultural implements used in The Gambia.[27] The inputs are distributed through the network of CPMSs. While inputs are supplied on credit to those CPMSs that qualified for loans based on their previous loan recovery performance, it sells inputs on cash to unqualified CPMSs.

The GCU purchased fertilizer from the Government of The Gambia (GOG) that functioned as an importer from 1988 to 1991. The fertilizer was sold by the GOG as an interest free loan to the GCU. However, the revolving fund established under ADP II was used to finance the purchase of agricultural implements and seeds at a zero interest rate from the GPMB. In 1991/92 the GCU imported 500 tons of 8-24-24 compound fertilizer and implements from Senegal using the revolving fund. It intends to continue importing fertilizer and other inputs in the future.[28]

The recent performance of the GCU in input markets has been noteworthy. The prices at which the inputs were sold to the farmers have not been subsidized and have reflected market rates. The inputs, especially fertilizer, were distributed at a lower price than

---

[27] The total consumption of fertilizer in the Gambia in 1991/92 was 2190 tons and GCU distributed 634 tons. See Chapter VII for details about the alternative channels that supply fertilizer in the country.

[28] The GCU has already placed orders with a firm in Spain to import 15-15-15 NPK compound fertilizer at $140/ton for distribution in the 1992/93 season.

170

its competitors such as the FAO.[29] The sample farmers interviewed were appreciative of the timely supply of inputs by the GCU but were concerned about the increase in prices compared to previous years. However, the members of unqualified CPMSs complained that inputs were not available even for cash sales during 1991/92. The unqualified CPMSs obviously lacked equity capital to buy inputs from the GCU and sell them for cash to their members.

The GCU has a comparative advantage in input markets due to its long experience and established infrastructure. However, several factors can easily erode these advantages such as the termination of ADP II funds, the shrinking demand for fertilizer due to the decreasing value cost ratio (i.e., groundnut price/fertilizer price ratio),[30] the increase in competition from alternative channels, and the changing operational systems of its competitors, such as the FAO and NGOs. All these factors could affect the GCU's share of future input markets. Left to adapt to market forces with no subsidization, two possibilities may arise: (i) it will be difficult for the GCU to realize economies of scale and profits so it will withdraw from the input market; or, (ii) the GCU will be the only agent that survives due to its comparative advantage in established infrastructure and experience. The result will also have serious implications for the loans issued through the GCU. A shrinking share of the GCU in the input market will also mean a decreasing role in the credit market.

C. Financial markets

Although the GCU is not a specialized financial intermediary regulated under the Financial Instruments Act (FYI) of the Central Bank of The Gambia (CBG), it is a major supplier of agricultural loans in kind and a mobilizer of savings to a small extent. In the pre-reorganization period the GCU had been supplying loans in cash and kind primarily as grants or at subsidized rates and mobilizing deposits through the CTCSs and CPMSs. The current credit program is, however, based on market rates and follows stricter operational procedures. The design of the current savings program implemented on a pilot basis is different from the operations of the earlier CTCSs and CPMSs. A definitive evaluation of the GCU's current financial services assessing its viability with privatization is, however, premature and difficult due to the fact that (i) the new credit program is only four years old and is still undergoing changes; (ii) the savings program was implemented only on a pilot basis in 1991/92; and (iii) accounting procedures are still being streamlined to generate data required for a detailed study. Nonetheless, this section examines the new credit and savings program based on the limited information obtained from the GCU and the informal interviews conducted for this study.

---

[29] The prices were lower due to its lower operational costs. The cost economies were realized in part due to its established infrastructure that reduced fixed and variable costs, and because of the zero interest loans received from the ADP II. This latter feature, of course, constitutes an implicit subsidy to GCU operations.

[30] See Chapter VII for details.

171

a.) Loans

Under the new credit program, GCU loans are issued in kind and in a limited amount of cash to qualified CPMSs to be onlent to qualified members through qualified village branches. Since the members are expected to sell their output through the GCU, their sale proceeds are reduced by the amount of their loan repayments. The funds to finance the GCU's input and output operations are obtained from external sources. The flow of commodities and credit through the GCU in the post reorganization period is diagrammed in Figure III-1. The following section explains the details of the objectives of the new credit program, its operational system and its performance over the past four years.

- Objectives of the new credit program: The GCU's credit unit was formed in 1982 and was made responsible for the processing of loan applications, loan disbursements and loan collection. However, it was not until 1988 that it was organized and equipped well enough to fully carry out these responsibilities. In 1988/89, based on the WB's recommendations, the credit unit was reorganized with competent staff; strict criteria were established for the credit program, the Village Responsibility System (VRS) was implemented, and cost effective efforts were introduced to provide a sustainable credit service by the GCU.[31]

- Criteria for the new credit program: Under the new credit program, loans in kind and in cash are extended only to those registered CPMSs that satisfy two conditions: (i) have repaid 95 percent of their loan arrears (principal and interest) since 1987/88;[32] and, (ii) purchase more than 500 tons of groundnuts/season.[33] The interest rates on the loans supplied by the GCU to the CPMSs and to the members have reflected market rates (see Table III-3). The Village Responsibility System, also called the Village Based Group

[31] The credit unit is staffed by a manager, assistant manager, and 2 senior credit officers, and 8 credit officers in Banjul and 32 credit supervisors at the CPMSs level. The loan application involves reviews at three levels: village branch, CPMS and GCU management. A village branch committee composed of five members acts as a loan committee to plan for future loan requirements, screen borrowers and approve loans. The village branch reports to its parent CPMS which then reports to the GCU. The CPMSs borrow from the GCU and on-lend to their respective village branches that in turn on-lend to their members.

[32] Any CPMS wishing to enter the credit program for the first time must have cleared a minimum of 95 percent of principal and interest on all loans received from the GCU during and since the 1987/88 season. Once qualified, it stays in the program irrespective of its subsequent repayment performance. Subsequently, the 95 percent rule applies to its individual village branches. Overdues of the CPMSs with the GCU before the 1987/88 season will be negotiated separately.

[33] This criteria was not strictly followed, however, since the majority of the CPMSs that repaid 95 percent or more of their loan overdues could not purchase the targeted 500 tons of groundnuts due to droughts.

172

Lending System (VBGLS), has been introduced.[34] The new GCU policy calls for loans to be made only to those qualified CPMSs that adopt the VRS to supply loans to their individual members. A village branch qualifies for loans from the CPMS only if it repays 95 percent of the principal and interest due on total current loans and loans in arrears since 1987[35] (see Appendix III-4 for details on the terms and conditions of the credit program implemented in 1991/92).

- Source of funds: Tables III-3 and III-6 show that the current credit program is supported by zero interest loans from the ADP II funds that were established in 1984/85 and by the GCU funds from the sale of assets. A total of about D1.5 million was drawn by the GCU from the ADP II funds in 1989 to supply inputs on credit. Table III-7 shows that loans were disbursed from the ADP II funds to the GCU to supply agricultural equipment and seeds but not fertilizer during 1989/90 and 1990/91. Since the government supplied fertilizer on credit to the GCU in 1989 and 1990, loans were not disbursed from ADP II for this purpose. However, the funds from ADP II were drawn at a zero interest rate to support the credit program over the past two years (see Tables III-3, III-6 and III-7).

- Growth of CPMS and village branches: Table III-8 shows that the number of qualified CPMSs has increased from five to 43 (out of 54 in total) over the past four years and the number of village branches has increased from 65 to 518. This fact suggests that the new credit program has had a positive impact in improving credit discipline among the members in that several CPMSs and village branches that had a poor recovery performance in the pre-reorganization period have repaid their former arrears and have qualified for the new program. Otherwise the CPMSs would not have qualified for the credit program. Table III-9 shows, however, that the growth of qualified CPMSs and village branches has a skewed geographic distribution. Although the number of CPMSs that qualified for the program has increased in all seven geographic circles, growth has been slow in several. Furthermore, while the number of qualified village branches has increased in several CPMSs across the country in the first two years, it has declined in three out of seven geographic

[34] The Village Responsibility System (VRS) or the Village Based Group Lending System (VBGLS) was introduced in 1988/89. Under VRS, each qualified village branch is expected to form a committee of five members to screen individual member borrowers in the village, and to approve, disburse, supervise and recover loans from these borrowers. The purpose of the VRS is to incorporate the local decision making and credit disciplinary functions that exist in each village community into the loan programs to strengthen the management of the GCU. The VRS was first introduced in five CPMS covering 66 villages that qualified in 1988/89 and was later extended to all qualified village branches.

[35] No village branch can qualify for the credit program until it has paid a minimum of 95 percent of principal and interest due on all previous loans. The member should have paid the amount due on all current loans plus any loan received since 1987/88 in full to get further loans.

13

circles in the last two years.[36] It is reported that these three geographic circles happen to be strongly biased toward the ruling party.

In general, although several village branches remained in the program for more than one year by promptly repaying more than 95 percent of their loan obligations, the core was primarily composed of newly inducted village branches into the program. An examination of the age of the village branches that continuously qualified for the program shows that the majority were one year old and that several village branches dropped out after their second year in the program (Table III-10). For example, of the 518 village branches qualified in 1991/92, 38 were out of the 65 newly qualified branches in 1988/89, 62 were out of 335 newly qualified branches in 1989/90, 74 were out of 118 newly qualified branches in 1990/91, and 334 that were newly qualified in 1991/92. It is interesting, however, that while the majority of old village branches stayed in the program in 1990/91, they dropped out in 1991/92. Whereas poor agricultural production due to severe drought in 1990/91 would have affected the repayment capacity of the members and hence caused a decline in the number of branches that qualified for the 1991/92 program, it is not clear, however, how the 334 new branches managed to repay their former arrears to get qualified in the same bad year. Therefore, while the increasing trend in the number of CPMSs and village branches that qualified for the program has been encouraging, the uneven and unsteady growth pattern after they enter the program needs to be considered as well. Several factors such as the drought, political support, and location specific mismanagement were reported to have contributed to the above trends.

- Supply of loans: Table III-2 shows that the total nominal volume of seasonal and term loans issued through the GCU declined in the post-reorganization period. With the growing inflation, total supply of loans declined also in real terms. Furthermore, the average volume of loans per CPMS and village branch has declined to extremely small amounts over the past four years. Table III-11 shows that the average nominal volume of loans serviced by individual CPMSs and village branches were substantially less compared to earlier years of reorganization. The indices on the average volume of loans per CPMS and village branch in 1991/92 represent only 18 and 19 percent of the corresponding figures in 1988/89, respectively. The declining trend was due to the rapid increase in CPMSs and village branches that qualified for loans that could not be serviced through declining ADP II funds. In other words, the demand increased at a much rapid rate while the magnitude of ADP II funds available to service it shrunk due to low recovery rates and inflation.

The design of the credit program made it mandatory for GCU to service all CPMSs that repaid at least 95 percent of their pre-1988 outstanding loans. The GCU was, therefore, locked into an institutional dilemma in which it had to include all CPMSs that qualified based on the 95 percent repayment rule even when it had limited funds to service them. As a result, the CPMSs and village branches that qualified for the program, especially

[36] See Appendix III-6 for further details on the CPMSs and village branches that qualified for the credit program from 1988 to 1992.

174

those that qualified in the earlier years of reorganization in 1988/89, were rationed and serviced with loans that have had a declining purchasing power.

The GCU also engaged in loan size rationing among the qualified CPMSs. Table III-12 shows that the ratio of the volume of loans approved to those applied or solicited (here after called RATION) ranged from 0.19 to 0.89 percent in 1991/92 (see column 3 for Bajakunda in the Basse circle and Burong in the Mansakonko circle).

The rationing of loans indicates a supply constraint faced by the GCU. This constraint is due in part to the declining balance of ADP II funds because of poor loan recovery and the effect of inflation. Although it is beyond the scope of this report to examine in detail it can be speculated that some of the funds recovered from loans are likely being used to meet some of the operating costs of the GCU that are not covered by the donors.

Several factors were reported to be determinants of loan size rationing: the recovery performance (RECOV) and quantity of groundnuts marketed (GNUT) in the previous year, previous loan recovery track record of the CPMS (proxied by AGE, number of years that a CPMS has been qualified for the credit program), and magnitude of competition from other input suppliers and output buyers (proxied by INDEX, an index reflecting isolation or difficulty in physically accessing a CPMS. An index of 1 represents easy access while 2 represents difficult access). The model can be written as follows:

$$RATION_t = f(RECOV_{t-1};\ GNUT_{t-1};\ AGE_t;\ INDEX_t) \qquad (1)$$

where t = time period.

A simple correlation analysis among the variables in the above model indicated, however, that RECOV and GNUT were the only significant factors that directly determined allocation of the limited capital among several qualified CPMSs (see Table III-13A).[37] The variables AGE and INDEX nonetheless were significantly correlated with RECOV and therefore indirectly affected loan size rationing. A linear regression analysis was conducted to test if RECOV and GNUT explained rationing and the results are presented in Table III-13B.[38] The variables AGE and INDEX were not included due to their collinearity with RECOV. Both the variables, RECOV and GNUT, had the expected signs indicating that ratio of loans supplied to loans demanded increased with an increase in loan recovery rates and quantity of groundnuts marketed in the previous year. Furthermore, the variable RECOV significantly influenced loan size rationing. The significant influence of previous loan recovery performance of a CPMS on the current amount of loans supplied shows the importance

[37] The newly qualified CPMSs in 1991/92 were not included in the analysis.

[38] The data on loans solicited and loans applied for were available for the 1991/92 and 1992/93 seasons. The data on loan recovery rates and quantity of groundnuts marketed refer to the previous years, 1990/91 and 1991/92, respectively. The newly qualified CPMSs in 1991/92 and 1992/93 were not included in the analysis.

of better recovery rates by all village branches that are attached with the CPMS so that the aggregate recovery rate for that CPMS is high. It is obvious that a few poorly performing village branches associated with a CPMS will pull down the loan recovery rate of the CPMS and increase the loan size rationing for those well performing village branches of the CPMS that qualified for new loans. While the linking of current loans made to a CPMS to its past aggregate loan recovery performance introduces some discipline into the system, it probably also leads some good performers to eventually default due to the lack of incentive mechanisms. In short, the supply constraint has led the GCU to ration it's loans, and the lack of appropriate incentive mechanisms to determine the amount to be rationed will lead to a drop out of good performers. Incentive mechanisms can be provided by rewarding good performers in the village branches attached to a qualified CPMS by not rationing their loans. Although the linking of the amount of loans granted to individual village branches implies higher administrative costs to the GCU, the responsibility can be delegated to the CPMSs. Indeed, the gains from the provision of proper incentives might outweigh the costs involved in implementing it. The rationing of loan size can thus be used as a penalty mechanism for poor loan repayment as well as a means to allocate scarce resources.

* Risk management: While the loan portfolio of the GCU has geographic diversification, it does not have enterprise diversification. Hence risk diversification is limited. The majority of loans are supplied to groundnut farmers, mostly men, and therefore are subject to risks through the covariance in incomes.[39]

Another element of risk concerns first time borrowers. The loan portfolio is composed of both first time borrowers (CPMSs that qualified for the first time) and repeat borrowers (CPMSs that qualified in earlier years). Since first time borrowers are generally considered more risky, financial intermediaries should supply smaller loans compared to loans to repeat borrowers. Table III-14 shows that the GCU in fact has been cautious in lending to new CPMSs and village branches. The average nominal volume of loans to new CPMSs (village branches) was lower compared to the average nominal volume of loans to old CPMSs (village branches). The data presented for individual CPMSs in Table III-12, however, does not show a predictable pattern of the ratio of the volume of loans approved to loans applied for between old and new CPMSs. This indicates that ambiguities still exist concerning how loans are rationed between old and new CPMSs.[40]

• Repayment performance: There have been mixed results in the recent loan recovery performance of the GCU. Table III-15 shows that while the loan repayment rate was very

---

[39] Since the reorganization, the GCU imports fertilizer that can be used for a variety of crops beside groundnuts. The fertilizer loans are, however, largely supplied to groundnut farmers.

[40] While factors such as the quantity of groundnuts puchased by competitiors in the area and track record of the CPMSs in Pre-reorganization period would have been considered in addition to loan recovery and groundnuts marketed, they were not obvious to the study team.

176

low in 1988/89, it improved in later years.[41] Although the recovery rate was high in the qualified CPMSs compared to the pre-reorganization period, the GCU still has problems in recovering overdue loans from all 86 CPMSs. The average loan recovery rate from the qualified CPMSs was 93 percent in 1989/90, but it fell to 73 percent in 1990/91. Table III-16 presents the recovery rate for the 25 individual CPMSs that qualified for the 1989/90 loan season. The disaggregated data show that while the 20 CPMSs recorded a recovery rate of 95 percent or above to qualify for the 1990/91 program, they were unable to maintain the same 95 percent recovery rate in 1990/91. The low recovery rate was apparently due in part to the decline in real output prices and higher fertilizer prices.

Official data that were available for the 1991/92 repayment rates showed that it was lower than 50 percent in the majority of the CPMSs (Tables III-15 and III-16). Table III-17 compiled from the sampled CPMSs shows that the recovery rate ranged from 8 to 88 percent in 1991/92. This poor recovery rate can be attributed to several factors such as drought in several locations, the anticipation of a loan write off during the election year,[42] and heavy subsidized competition from Senegalese groundnut traders who purchased an estimated 30,000 tons or more of groundnuts.[43] The Senegalese traders offered D2400/ton compared to D1550/ton by the GCU while the world price was nearly D1700.[44] As a result, the majority of farmers, including GCU borrowers, sold the major part of their marketable surplus to these traders. Table III-17 shows that the volume of groundnuts purchased in 1991/92 by the sampled CPMSs ranged from four to 414 tons.[45] Indeed, it was rational on the part of farmers to sell their crop to the highest bidder. It is discouraging to note, however, that a number of the borrowers presumably sold at higher prices to the Senegalese and failed to repay their GCU loans in cash, but chose instead to default.[46]

---

[41] The poor recovery rate in 1988/89 was explained by the decline in crop revenue from poor crop production due to drought, increases in interest rates and fertilizer prices that increased the size of loans, and a fall in groundnut prices compared to previous years. Also the merging and closing of several CPMSs created confusion among the borrowers. Some of the farmers sampled for this study reported that they assumed that loans from a merged or closed CPMS were written off by the GCU.

[42] The elections were held in May 1992 but no loans were written off by the government.

[43] Of the total groundnut production of 84,000 tons, 10,000 tons were purchased by the GCU and the GPMB, nearly 40,000 tons were estimated to have been stored as seeds and consumed as food.

[44] The world prices on oil type groundnuts were low on the one hand due to a bumper crop in the United States and, on the other hand due to diversion of damaged confectionery type groundnuts to oil crushing in Argentina. The Gambia primarily produces oil type groundnuts.

[45] The CPMS that purchased 414 tons in 1991/92 used to purchase more than 2,000 tons in previous seasons.

[46] The majority of the managers of the sampled CPMSs reported that while 10 percent of the borrowers fully repaid their loans in kind, nearly 50 percent paid part of their loans by selling fewer bags of groundnuts, ten percent paid part of their loans in cash and 30 percent defaulted. The sampled farmers confirmed the above figures. The sampled farmers stated that they sold at least a few bags to the GCU primarily to ensure their

177

It was possible, however, that the majority who sold to the Senegalese traders were small farmers with little marketable surplus due to droughts. Perhaps, the income generated from the limited sale proceeds had to be used to pay off senior claims and therefore could not also cover GCU loans. Nonetheless, the GCU's lack of an alternative contract enforcement technique is underscored by the 1991/92 experience. It was anticipated that the majority of the village branches and members will not qualify for the 1992/93 season if the 95 percent rule is strictly followed. The GCU did not have clear criteria by May 1992 to follow in the 1992/93 season regarding those borrowers that repaid in cash either in full or in part.

The current trend in repayment rates raises serious issues that must be addressed if the GCU is to become viable and self-sustaining. The GCU must maintain a loan recovery rate of over 95 percent for its credit program to become a viable operation. The operating costs of the credit program, excluding the cost of external funds, accounts for nearly 15 percent of its total loan portfolio (Clark, 1989). In the event that the interest free ADP II funds are not extended, it will be difficult to sustain a sizeable credit program with the current repayment rate. The repayment problems encountered by the GCU have underscored the impact of droughts that occur every three to four years on the borrower's capacity to repay combined with highly subsidized pricing policies in Senegal that weakens the GCU's "closed circuit" loan enforcement mechanism of tying loan repayment to output purchases.

b.) Savings

The poor past performance of the GCU in mobilizing savings through the CPMSs has impeded the reintroduction of a savings program. However, its initial positive credit experience through the VRS and the improvement in groundnut prices in The Gambia led it to reinitiate the savings program in 1991/92 in selected CPMSs. Savings at three levels were proposed: the village branch, the CPMSs and the GCU. While the savings transferred to the GCU will earn an 8 percent annual interest rate, the savings at the other levels will be held as non-interest earning current accounts at the respective level. Although the savings are not linked to loans, the program is integrated with the credit program for surplus generating activities. The GCU insists on collateral in terms of a bond from the managers of the CPMSs and it trains village level committees in monitoring deposits to ensure safety of deposits at the CPMS level.

While the awareness regarding savings mobilization has been created among the members, only limited success has been reported in actually mobilizing savings. The sampled CPMSs managers reported that although they were trained in record keeping and were provided with safety boxes they could not mobilize deposits since their members lacked the capacity to save due to low incomes. The sampled farmers, on the other hand, were reluctant to save with the GCU since they were not confident of their accessibility to deposit

---

loyalty and hence access to future loans, and secondarily to get immediate cash to spend on emergency purposes.

178

funds in times of emergency. Besides, the deposits held at local units earned no interest. Nonetheless, the sampled women members expressed their desire to save with the GCU provided that attractive rates were paid, and they were allowed access to easy withdrawals and contingency loans at reasonable rates.[47]

The savings mobilization program is intended to increase the pool of internal funds to support the GCU operations in the event that donor support is discontinued following the withdrawal of ADP II support beginning in 1993. The GCU, however, has yet to make serious efforts to introduce innovative mechanisms such as positive interest rates and access to future loans that will win the confidence of its members and attract savings from them. Also the GCU could conceivably offer financial services in the CPMS and the village branch levels to semi-formal and informal intermediaries who mobilize deposits, especially from GCU members, but are presently unable to safely store them in their local units.[48]

IV. STRENGTHS, WEAKNESSES, PROBLEMS FACED AND PROPOSED CHANGES BY THE GCU

The GCU has undergone significant changes since its reorganization in 1988 and the results, especially in these first years, have been noteworthy. On the one hand, it has established the largest and most widespread network in the country. Furthermore, its specialization in output, input and financial markets has produced some comparative advantages for the GCU over its competitors including the GPMB, the FAO, the NGOs, and private entrepreneurs. On the other hand, while the GCU's performance over the past four years has demonstrated its ability to effectively survive in a liberalized environment, it is not clear that its credit program can be a viable and self-sustaining operation in the long-run in the absence of subsidized external funds or some form of government support. This section examines the GCU's strengths, weaknesses and problems faced in effectively servicing the output, input and financial markets under a liberalized economy.

---

[47] It was not possible to determine how much the rumored losses of savings in the ill-fated Agricultural Development Bank and in the closed CTCSs might have influenced member attitudes towards savings in the GCU.

[48] See Chapter II for details.

1. Strengths

A. Output market

Its long experience accumulated as an output buyer combined with an established infrastructure in transport and manpower are the strong points of the GCU. Furthermore, access to external funds from the formal banks aids its output marketing operations because it can implement good marketing strategies such as paying the farmers in cash with minimum delays and fewer transaction costs. In addition, the tying of output purchases to input loans facilitates its role as a major output buyer in the country and enforces loan contracts. The large CPMS network with its wide geographic coverage also mitigates covariance risks caused by uniform crop failure experienced by all farmers in limited geographic areas. Indeed, these strengths helped the GCU to retain its position as a major domestic buyer of groundnuts in 1992, a rather unusual year for the Gambian output markets.[49] Although the GCU could not beat the Senegalese traders due to huge output price differentials, it outperformed the GPMB and private groundnut buyers affiliated with the GPMB.

B. Input market

The GCU's ability to provide wide access to good quality inputs is facilitated by its large retail network, transport and other facilities such as storage depots, and access to interest free loans from the ADP II. In 1992, these factors helped reduce its fixed costs so it could supply inputs at a lower price than its competitors including the FAO. Furthermore, its recent entry into import markets helps its search for foreign suppliers that offer competitive input prices so it can distribute inputs at market prices.[50]

C. Financial market

The wide coverage of a large clientele accumulated since its inception, its established CPMSs infrastructure and valuable experience gained through the past implementation of several credit and savings programs are the strong basic building blocks that facilitate the GCU's financial market operations. The current credit and savings programs rely on these strengths.

---

[49] In 1992, the GCU was competing with the GPMB and its affiliated private traders for the first time instead of buying for the GPMB. The competition was intensified by aggressive marketing strategies followed by Senegalese for the first time including groundnuts prices that were 50 percent more than the GCU, paying immediately for the produce in cash in CFA francs, a preferred currency in The Gambia, and buying from the doorsteps of the farmers to reduce farmers' transaction costs.

[50] A major qualification to these statements is that we were unable to analyze the GCU financial accounts to determine if it is covering its full costs. Our previous observation suggests that it is not.

There is no doubt that stricter credit discipline has been introduced under the new credit program. The number of CPMSs and village branches that qualified into the credit program by repaying more than 95 percent of their overdues has increased. The village committees formed under the VRS have been active in borrower screening, loan disbursement and enforcing contracts. As a result, the loan recovery rates have been high during years of good weather and less Senegalese intervention in output markets.[51] The charging of market interest rates to CPMSs and to farmer borrowers has demonstrated the GCU's commitment to a market economy. The increased awareness among the farmers regarding the GCU's deposit mobilization schemes facilitates the savings program that has been introduced on a pilot basis.

2. Weaknesses

A. Output Market

The lack of processing activities by the GCU reduces its opportunities for exporting value added outputs. The export of processed groundnuts could help realize higher prices that could be passed on to farmers compared to unprocessed groundnuts. In addition, the absence of crop diversification increases the covariance risks inherent in concentrating in the groundnut sector.

B. Input Markets

The input marketing operations, especially for fertilizer, are weakened by a complete dependence on foreign suppliers. While it may not be remunerative to build fertilizer production or mixing plants in The Gambia, it should be possible to develop seed multiplication units that can engage in research and multiplication of quality seeds. The unavailability of quality seeds was reported by the sampled farmers to be one of the reasons for poor groundnut production in the past few years.

C. Financial Markets

Even though the new credit program has stricter credit discipline compared to earlier programs, it is still fraught with several weaknesses. While the number of CPMSs and village branches that qualified for the credit program increased over the past four years, their geographic distribution has been skewed and this affects access to credit by their members.

---

[51] While the loan recovery rates are not comparable to that of the VISACAs, they are better that the recovery rates recorded by the FAO and the NGOs (see Chapter IV and II, respectively).

There are problems in enforcing loan contracts due to several external factors including droughts and intense competition for groundnuts from Senegal, and internal factors such as limited emphasis on collateral and borrower education. However, the GCU has not developed mechanisms, such as crop and enterprise diversification and collateral substitutes other than output tied contracts, to mitigate the negative externalities in the markets. Therefore, while recovery rates are high during good years, they have been poor in bad years.

Although the loans consist of in kind and cash components, they are supplied only for production, storage or processing purposes without considering the fungible nature of credit. The limited amount of cash supplied for paying labor expenses is often diverted to consumption purposes. Furthermore, the cash component is uniform across all borrowers regardless of their risk type or the area or crops cultivated. The criteria used to ration loans among new and old CPMSs have been ambiguous and it is not clear how loans are rationed at individual borrower levels. In other words, while the analytical results suggest that aggregate previous loan recovery performance of a CPMS influences the amount of credit granted to a given CPMS, it is not clear if the GCU has successfully adopted a "learning by doing" technique in supplying loans to old and new clients in such a way that good performances are rewarded.

The current borrower education program has had limited success in creating awareness regarding the members' responsibility in electing the village committee and management committee at the GCU. For example, the elections held in 1989 returned the same management committee that was appointed by the government under the Compulsory Management Regime.

The emphasis on groundnuts has rationed access to several women clients that are traditionally engaged in growing food crops. The limited representation of women members affects the performance of the GCU in two ways: (i) they are generally the most reliable borrowers; and (ii) they are generally the most promising savers. The inclusion of women also would help diversify GCU's portfolio into other crops and non-farm enterprises. The GCU is not expected to directly tie loans to their output because it is not involved in marketing several crops and non-farm products, but it should develop mechanisms to include more women clients into its core.

The savings program is initiated to improve local participation in GCU's activities, and awareness is being created among the farmers regarding the mobilization of deposits; however, the GCU has yet to develop attractive operational procedures to actually mobilize deposits. The current program that offers only a eight percent annual interest rate for fixed deposits held at the GCU and zero percent for current accounts held at CPMSs and village branches can not attract the rural poor to save.[52] Whereas it may not be possible for the

[52] By comparison, the VISACAs offer a 20 to 30 percent annual interest rate on their savings (see Chapter V). Currently, the GCU mobilizes savings only at the CMPSs and village branch levels.

182

GCU to offer higher rates than this with its current risky portfolios and trends in their loan recovery rates, it can offer nonprice services including assured production and contingency loans for savers.

3. Problems Faced

The GCU has been honest in its efforts to become a viable and efficient operation in the post reorganization period but has been unlucky. The current problems of the GCU can no longer be fully attributed to internal factors such as incompetent management but to external and foreign factors including production risks, government macroeconomic policies, inappropriate incentives, donor intervention in financing its operations and Senegalese policies. This section identifies some of the problems faced by the GCU in its current role in Gambian markets.

- Inadequate financial resources to carry out its present scale of activities. Output marketing is financed by the Standard Chartered Bank (SCB) at market interest rates. If the current trend of intense competition from Senegalese groundnut traders continues, it is not clear that the SCB will continue financing the GCU since it will be more difficult for the GCU to operate in output markets and honor its loan contract with the SCB at the present interest rates.

In the input and credit markets, there is a need to strengthen the ADP II fund since the poor recovery rates and inflation in the past years have eroded the size of the fund. The GCU primarily relies on its own funds and ADP II loans that supply interest free loans. The USAID has recently raised the issue of market rates for ADP II loans. The Minister of Finance has assured the USAID that future loans from ADP II loans will be based on market rates and the WB has confirmed this. Also, there has been no extension of the ADP II loans that are scheduled to end by 1992. If the ADP II fund is withdrawn and no strong savings program is implemented, the future sources of funds to support the GCU's input marketing operations will only be high interest external funds and government subsidies.

- Image problem. In the post reorganization period, the GCU has demonstrated its ability to improve its performance as an autonomous cooperative despite the presence of several competing agents, and difficult times due to economic and agricultural production problems and aggressive subsidized competition from Senegal. Put differently, if there would have been no reorganization, the old GCU would likely have collapsed in the face of these adverse conditions. While problems still remain due to its limited number of adequately trained personnel and rudimentary accounting procedures, they are not the primary factors that influenced the GCU's post reorganization performance. Nonetheless, it has been difficult for the GCU to win member and donor confidence due to its old image as an incompetent unreliable and quasi parastatal operation.

- Competition from other output buyers and input suppliers. With the liberalization of markets under the ERP, several heterogenous agents have emerged including the GPMB, the FAO, private entrepreneurs and the NGOs that supply output and input marketing services. These agents operate under diverse marketing procedures in buying output and selling inputs, especially on credit, that are sometimes detrimental to the GCU. For example, these input suppliers follow different pricing structures such as charging low and subsidized interest rates for input loans thereby undermining the efforts of the GCU to charge market rates. Output buyers such as the Senegalese traders use large groundnut price subsidies from their government to offer higher groundnut prices than the GCU. Despite its several comparative advantages, the GCU is unable to effectively compete with these new agents in the market in the absence of similar subsidization.

- Uncertain policy environment. The government still subsidizes the GPMB to buy groundnuts and to distribute fertilizer on credit at subsidized rates through government programs. This constant government market intervention by subsidizing producer prices, input prices and credit raises uncertainty about the government's commitment to market liberalization and market determined prices. The uncertainty regarding Senegalese prices for groundnuts adds another dimension to the problem. The Senegalese prices are in turn influenced by the level of subsidies obtained from their French counterparts. This uncertain policy environment undermines the GUC's efforts to effectively function in a market economy.

- Uncertain groundnut production. The GCU was primarily formed to facilitate groundnut farmers in The Gambia and that objective is largely unchanged with its reorganization. However, shifts in cropping patterns from groundnuts to coarse grains, rice and cotton have occurred in the last three years. While these shifts might be temporary to mitigate declining value-cost ratios in groundnuts and droughts, it nevertheless raises concerns regarding the GCU's operational procedures that are currently designed only to deal with groundnuts.

4. Plans for the future

The GCU is currently launching a proposal to extend loans to specific target groups consisting of farmers who traditionally had no access to cooperative loans. It is encouraging the CPMSs to identify and support cohesive farming groups that may qualify based on their management capacity and enterprise viability. They may be women's groups, produce specific interest groups like vegetable growers, etc.

Links are established with the Women's Horticultural Cooperatives (WHC) and plans are underway to train the WHC on credit programs.

Women members are encouraged to actively participate in village level committees.

184

Product diversification in terms of rice and coarse grains is contemplated.

Processing activities will be considered although this has limited potential.

Savings mobilization from individual members by the CPMS has been initiated to strengthen the financial base of the GCU. Although operational procedures need to be refined, plans are made for an integrated approach using the credit program to increase their income.

The GCU intends to encourage members to view the VRS as an opportunity to become involved in managing savings and loan programs. This will eventually help decision making at decentralized units.

V. CONCLUSIONS AND RECOMMENDATIONS

1. Introduction

With the liberalization of the output, input and financial markets in 1985, several agents have emerged to provide marketing services in The Gambia. Currently, the groundnut buyers include the GPMB, the private traders affiliated with the GPMB, the GCU and the Senegalese traders. The networks that supply inputs on credit include the GCU, the FAO, the NGOs and government programs, and the networks that supply savings services in rural areas are limited to the NGOs and the GCU.[53] These heterogenous networks sometimes compete and sometimes collaborate with each other. They are scattered throughout the country and operate under diverse marketing technologies. It appears, therefore, that the current question in The Gambia is not the availability of alternative sources of groundnut buyers or input suppliers or external funds for lending to the poor, but rather the competitive access to these services and their sustainability in rural areas.

Currently, the majority of these marketing networks are financed through external grants and government subsidies to conduct their marketing operations. The FAO is planning to withdraw from the input market, the GPMB is undergoing privatization, private

---

[53] In the financial markets, formal bank branches are absent in rural Gambia, and the NGOs are usually unfocused and rudimentary intermediaries that provide subsidized loans from external funds and operate with diverse and often contradicting philosophies. The VISACAs mobilize local savings to provide loans for income generating activities but they are small and limited to only six villages. Informal networks such as osusus in urban areas and kafos in the rural areas mobilize savings and provide loans but are not capable of either servicing a larger clientele or protecting savers from inflationary losses. There exists an effective demand for loans and a promising potential for mobilizing savings in rural and urban Gambia. The well documented evidence on the continuing presence of several semi-formal and informal savings based on financial intermediaries offers evidence to the above argument (see Shipton, 1992).

entrepreneurs are showing some interest in entering the input and financial markets, the NGOs are trying to establish savings-linked credit programs, and the GCU is undergoing organizational changes but faces uncertainty about future funding from the ADP II. With these changes that involve dynamic institutional dilemmas, it is hard to predict the future role of the GCU. While the GCU is expected to continue as a major player due to its comparative advantage as a long time incumbent, uncertainties remain regarding its viability and sustainability as a reliable supplier of financial services. The status of its other activities are beyond the scope of this study.

This section, therefore, outlines two extreme scenarios that explore the future role of the GCU as a supplier of efficient financial services in a self-sustaining fashion in a liberalized economy. Scenario one depicts a favorable market environment while scenario two depicts an unfavorable one for the GCU. The scenarios define the alternative roles and impacts of key agents in selected markets and help define the consequences for the GCU as an autonomous cooperative. Table III-18 depicts the role of the various marketing agents in shaping the scenarios outlined in this section. A discussion on policy options under each scenario concludes this section.

2. Scenario One: The Optimal Mix of Market Conditions, Agent Behavior, and Institutional Security

Output markets. It is assumed that: (i) the GPMB is successfully privatized and the new firm limits its operations to only processing groundnuts and does not directly buy or export groundnuts; (ii) Senegalese traders offer competitive (unsubsidized) groundnut prices consistent with the world markets; (iii) the formal banks such as Standard Charter continue to supply crop finance to the GCU; and (iv) there is no government intervention in terms of producer price subsidies.

Input and financial markets. It is assumed that: (i) the FAO withdraws from the input market; (ii) the ADP II funds are expanded to finance GCU's input and credit operations; (iii) the NGOs restrict themselves to non-agricultural portfolios; and (iv) there is no government intervention to subsidize input supplies.

This scenario assumes the most ideal market environment for the survival of the GCU as a primary output buyer and input supplier on credit (see Table III-14). This scenario might even lead the GCU to become a natural monopolist in the output and input markets through the efficient use of its established infrastructure and marketing experience. This scenario does not preclude, however, the entry of private entrepreneurs that are capable of competing with the GCU if it realizes excessive monopoly profits. This scenario also assumes a constant value cost ratio for agricultural crops, favorable weather conditions, a predictable demand for inputs and no major shifts in cropping patterns in the future. Although these assumptions are restrictive, they facilitate the analysis. There are six

recommendations about actions that should be taken under this scenario to help ensure the sustainability of the GCU.

A. Strengthening of the ADP II Fund

Although data on the current size of the ADP II fund were not available, sources reported that it has declined over the years due to low loan recovery rates and inflationary losses. It would be necessary to augment the ADP II through the infusion of funds from the World Bank and other donors. Better loan recovery rates through improved borrower screening techniques and the use of collateral substitutes is also required if the GCU is to conduct its marketing operations at the current scale.

B. Reserve Funds

The GCU should establish a reserve fund to mitigate unfavorable weather conditions that occur two to three times in a decade. Since the recovery rates in bad years average 40 to 60 percent, this reserve fund should be at least one third of the average volume of loans issued in a normal year. This reserve fund should be maintained in formal banks to earn market rates. The funds should be drawn upon during bad years and replenished during good years by diverting part of the interest earnings.

C. Portfolio Diversification

The GCU has a geographically diversified portfolio due to its wide penetration throughout the country. However, the portfolio is highly concentrated in groundnuts, a highly risky crop. The GCU should explore ways to diversify into other crops and vegetables. Crop diversification is important if the recent trends of declining groundnut productivity and shifts in cropping patterns from groundnuts to coarse grains and cotton continues in the future.[54] Crop diversification will help mitigate covariance risks that arise due to the droughts and pest damage of the groundnut crop.

In the event that the GCU continues as a private organization, it should explore ways to function as an exporter of groundnuts preferably after value added processing. It should also develop aggressive mechanisms to facilitate its role as an importer and distributor of inputs. Economies of scale, however, need to be realized in importation and distribution of inputs.

---

[54] The decline in groundnut productivity is due in part to the unavailability of quality seeds, droughts and the reduction in use of chemical fertilizers. The increase in area under coarse grains may be attributed to their ability to withstand droughts and to satisfy consumption needs in bad years.

D. Savings Mobilization

A strong orientation towards deposit mobilization should be developed to raise the GCU's internal funding position. While linking savings proportionately to loans received by members is not required, it should be mandatory for farmer members to save with the GCU. The GCU should, however, pay positive interest on the deposits held as fixed deposits irrespective of the level at which they are held. The current savings program offers a eight percent annual interest rate on deposits held at the GCU and zero percent on deposits held at the levels of CPMSs and village branches.[55] The village branches and the CPMSs should be given authority to use the funds held at their levels, although the GCU should monitor and supervise them. The village branches and the CPMSs, especially those that are unqualified for the credit program, might use these funds to buy fertilizer from the GCU on cash to sell to their members. This would avoid penalizing good borrowers in unqualified villages and CPMSs by denying them access to inputs.

The GCU should also explore ways to attract non-members, including the NGOs and women, to expand its pool of savers and funds. In the absence of formal bank branches in the rural areas, the GCU could begin to operate more effectively as an alternative formal financial intermediary network. No one can argue for a strong savings mobilization for the GCU if it leads to members losing their savings. The GCU needs to assure depositors concerning the liquidity and safety of their funds. This requires two actions. First, the individual CPMSs and village branches need to carefully plan their liquidity requirements so funds are available when depositors want to withdraw them. Second, accounting standards and GCU operations need to be improved so there is no use of mobilized funds to cover operating costs and poor loan recovery. Otherwise, savings will be drained away to cover GCU expenses.

E. Member Education

The GCU members should be educated regarding the use of funds, repayment ethics, the advantages of savings discipline, and the importance of peer monitoring to avoid misuse of funds by the village committees and CPMSs. The members should be made aware of the fact that the GCU is their organization. The member education programs must emphasize the collective responsibility of owning an organization.

F. CPMS Network

The managers of the CPMSs and village level committees should be trained in record keeping so that accounting procedures can be streamlined. It is important to maintain proper records, especially when they mobilize savings and have a fiduciary responsibility as a deposit mobilizer.

---

[55] By comparison, the VISACAs pay 20 to 30 percent annual interest on all deposits held as fixed deposits but pay no interest on current accounts (see Chapter V).

The managers of the CPMSs and village level committees should be trained in borrower screening mechanisms that incorporate "learning by doing" techniques. CPMSS and individual members should be given small loans first, then the size should be increased when their repayment performance justifies doing so.

3. Scenario Two: The Unfavorable Mix of Market Conditions, Agent Actions, and Institutional Instability

Output markets. This scenario assumes that: (i) the GPMB functions as a processor, buyer and exporter of groundnuts either as a parastatal or a privatized firm; (ii) Senegalese traders occasionally offer higher groundnut prices and provide output marketing services at lower transaction costs than does the GCU; (iii) the formal banks do not supply crop finance to the GCU; and (iv) no government subsidies are provided to the GCU.

Input and financial markets. It is assumed that: (i) the FAO continues to operate in the input markets as an importer and distributor; (ii) the NGOs are active in financing agriculture; (iii) no extension is provided for the ADP II funds to finance GCU's input and credit operations; (iv) no subsidized external funds are provided to the GCU for groundnut marketing to compete with Senegalese buyers; and (iv) no government subsidies are provided to the GCU.

While this scenario paints a gloomy market environment within which the GCU would operate, it partly resembles the 1991/92 market conditions. The GCU's competitors are, in general, subsidized through external donors and government. The GCU is, however, expected to compete based on its comparative advantages rather than through subsidies or external support. This scenario underscores the problems faced by an unsubsidized GCU, despite its comparative advantages, in operating in an environment characterized by asymmetric subsidization. This scenario also assumes a constant value cost ratio for agricultural crops, favorable weather conditions, a predictable demand for inputs and no major shifts in cropping patterns in the future. Eight actions need to be taken to help ensure the survival of the GCU in this scenario.

A. Guarantee fund

In the event that ADP II is discontinued, the current balance of the ADP II funds should be converted into a guarantee fund that would be augmented through the infusion of donor funds and better recovery rates. This fund could be maintained in a local bank to be used as a guarantee for GCU loans. The improvements in GCU loan recovery rates discussed in scenario one would also need to occur.

B. CPMS network

With several alternative sources of output buyers and input suppliers that sell on credit, and the lack of viability of several CPMSs, the GCU should consider scaling down its operations and limiting itself to a smaller number of well functioning CPMSs and village branches. This scaling down implies that all nonperforming CPMSs out of the present 54 CPMSs would be closed down and liquidated. Otherwise, with declining funds the GCU will end up supplying smaller sized loans with lower purchasing power and declining productivity thereby reducing the value of loan services and very likely affecting negatively the incentives for good repayment from early qualifiers. The nondiscretionary expansion of the CPMS network based only on the 95 percent recovery rule has in recent years brought in weaker CPMSs from the pre 1988/89 period and has penalized early qualifiers through a reduced volume of loan services. This has introduced moral hazard into the system. The criteria to select the CPMSs that remain with the GCU should, therefore, be based on: (i) the ability of the CPMS to recover at least 95 percent of its current loans made after reorganization for at least two years, (ii) the capability to purchase groundnuts from the GCU at least to some break-even level, and (iii) the capacity to mobilize deposits.

C. Reserve fund at the GCU to offer competitive output prices

Currently, groundnut prices in The Gambia are tied to world market prices. The prices should also be competitive with Senegal. A reserve fund should be established at the GCU to allow it to offer competitive prices with Senegal to a reduced number of CPMSs. These reserve funds should be built up during good years to be drawn upon in the event that high Senegalese prices are encountered again. The strongest arguments for this approach to the Senegalese problem are: (i) that this price instrument is the most efficient one available to the GCU to equitably distribute income to a large number of its members; and (ii) the GCU needs some assurance of access to groundnuts if it is to compete in a market environment and ensure loan recovery from its fertilizer loans. Otherwise, with porous borders and informal trading arrangements, it is not possible to prevent cross border trade between The Gambia and Senegal. The 1991/92 situation is evidence for that argument. The large groundnut cross border sales into Senegal could have been prevented if the GCU or the GPMB could have offered higher prices to compete with the Senegalese. This occurred in 1986/87 and 1987/88 when the government fixed groundnut prices at 15 to 20 percent levels less than the Senegalese prices to induce farmers to sell in domestic markets (see McPherson and Radelet, 1991). This experience shows that the GCU need not necessarily exactly meet the Senegalese prices to compete due to transport costs, uncertainties in the timeliness of Senegalese payment practices etc.[56] But in 1991/92, the price differential almost reached 50 percent. As a result, although the farmers were not affected, the GCU suffered because of low output purchases. Furthermore, loan recovery rates were estimated to be lower than previous years since the input-credit operations are linked to output marketing to ensure loan repayment. In short, the GCU lost its comparative advantage to enforce loan contracts by tying loans to output marketing.

---

[56] The sampled farmers reported that they would sell to the GCU if the price differential between the GCU and Senegal is less than D300 to D400/ton of groundnut.

Finally, items B, C, D, E, and F described in scenario one would also have to be implemented in this scenario.

4. Conclusion

This chapter has described the operations of the GCU both prior to and following its reorganization in 1988. The emphasis has been on its credit and savings operations, but other parts of its activities had to be considered as well because of their interrelationships. Clearly, the GCU has experienced a wide range of problems, but it has shown some positive signs of improvement since reorganization. Although an in-depth examination of its internal management efficiency was beyond the scope of this study, its sincere attempts made on reducing the expenditures are noteworthy. Of course, the GCU must continue to tighten up its internal operations and bear the consequences of its mistakes. But it is obvious that the GCU faces serious external challenges over which it has little control. There is not a level playing field among institutions operating in various markets in The Gambia. In particular, GCU cannot be expected to compete on an uneven playing field caused by policies in neighboring countries over which it has no control. Although the GCU has received some subsidies in the form of the ADP II fund and enjoys an infrastructure and a network of CMPSs that gives it some comparative advantages, it is faced by subsidized competition on all sides. The NGOs and the FAO are highly subsidized competitors in the input and credit markets. On the output side, it faces the competition of subsidized Senegalese prices. Not only does this affect the volume of GCU's marketing operations, but it also has a spillover effect in reducing the recovery rate of its input loans by weakening contract enforcement mechanism through its marketing role.

It is not rational to close down GCU when it has made serious attempts to reorganize its management and operational procedures to attain sustainability and viability. The government and donors should at least observe its performance for another two to three years until the ADP II funds are exhausted. Furthermore, they should explore ways to develop a consensus between The Gambia and Senegal regarding the groundnut pricing structure. In other words, if the donors are reluctant to inject funds into the GCU they should at least urge Senegal to follow competitive and unsubsidized pricing policies.

An obvious alternative is for the GCU to diversify into other areas. But groundnuts are likely to be the most important sector of GCU activities for the foreseeable future. With greater stability in the groundnut sector, the reforms undertaken by the GCU might be adequate to begin to assure its viability.

Although it was beyond the scope of this study to thoroughly analyze the groundnut sector, it appears to be a strategic one in the country. This chapter has shown that the future of the GCU is largely tied to this sector, at least for the foreseeable future. Even more important, any private firm that acquires the GPMB groundnut facilities will need

some assurance of access to groundnut supplies if it is going to prosper. Given the impossibility of controlling the cross border trade, the GCU is going to have to develop some type of reserve fund for use in competing with future high prices in Senegal. Otherwise, the GCU and the country will lose control over the marketing of this strategic commodity, and Gambian farmers will be subject to the whims of future Senegalese policies, a situation untenable for any political regime. The privatization drive in The Gambia has not yet dealt with this crucial problem. Until it does, the GCU and all private agents linked to the groundnuts sector in The Gambia will be subject to great uncertainty. In addition, uncertainties regarding GCU's internal efficiency, ability to recover loans and access to groundnut markets impede it's future viability. At best, these problems will destroy any incentives for future investments in the sector. At worst, it may destroy the GCU.

REFERENCES

African Confederation of Cooperative Savings and Credit Associations (ACCOSCA), "Report on the Review of The Gambia Credit Union Movement," Kenya: ACCOSCA, March 1990.

Clark, R.H., "Lending to Small Scale Farmers: The experience of the Gambia Cooperative Union," Paper presented at the GCDB workshop on Financing Small Scale Farmers and Rural Artisans, Banjul, Oct 2-6, 1989.

Clark, R.H., "A Study of Agricultural Credit Operations of the Cooperative Movement in The Gambia," Geneva: International Labor Organization, 1987.

Demissiee, Asafa, Lyle Brennemaan, and Jeffrey Nash, "Study of the Operations and Management of the Gambian Cooperative Union," Harvard: HIID, 1989.

Gai, Baboucar B., "Agricultural Input Distribution and Marketing: An Approach by GCU," Prepared for the Central Bank Training Workshop on Rural Savings and Credit and Support Services: Organization, Policies, Procedures and Management, Banjul, September 20, 1991.

Gai, Baboucar B., "Policies, Organization and Operation of the Gambia Cooperative Union," Prepared for the Central Bank Training Workshop on Rural Savings and Credit and Support Services: Organization, Policies, Procedures and Management, Banjul, September 20, 1991.

McPherson, Malcolm F. and Steven C. Radelet, "Economic Reform in The Gambia: Policies, Politics, Foreign Aid, and Luck," in Reforming Economic Systems in developing Countries, Dwight Perkins and Michael Roemer (eds), Harvard Press: HIID, 1991.

Pollard, Stephen K., et al., "Midterm Evaluation of Strengthening Local Financial Sector Through Pan-African Credit Union System Approach: The Gambia," WOCCU/ACCOSCA, April 1992.

Shipton, Parker, "The Rope and the Box: Group Savings in The Gambia," in Informal Finance in Low-Income Countries, Dale W Adams and Delbert A. Fitchett (eds.), Boulder: Westview Press, 1992, pp. 25-42.

The Gambia Cooperative Union, "Measures Agreed with the World Bank Mission During September 1989 to Improve the Efficiency and Financial Viability of the Gambia Cooperative Union Ltd.," Unpublished report, Kanifing: The GCU, 1990.

193

The FAO, "Agricultural Credit Policy and Structure in The Gambia," Unpublished report, Rome: The FAO, 1986.

The Gambia Cooperative Union, "Impact of Measures for Improving the Efficiency and Economic Viability of the Cooperative Movement," Unpublished report, Kanifing: GCU, 1990.

The Gambia Cooperative Union, "Report of the General Manager to the Annual General Meeting," Unpublished report, Mansokonko, 1990 and 1991.

Zeller, Manfred, Ken Johm and Ebrahim Kamara, "Rural Financial Markets and their Food Security Linkages in The Gambia: Current State and Policy Implications," Unpublished report, Washington D.C.,: IFPRI, 1991.

Table III-1 Groundnuts: Production, Quantity Delivered to GPMB by Source, and Producer Prices in The Gambia and Senegal, 1974 to 1992.

Year	Production '000 tons	Quantity Delivered to GPMB by: Source ('000 tons)				GCU as % of GPMB Purchases	% of GPMB's Purchase in Total Production	Prices (D/ton)		
		GCU	Private Traders	GPMB Depots	Total			Gambia	Senegal	F.O.B.
	(1)	(2)	(3)	(4)	(5)	(6)	(7)	(8)	(9)	(10)
1974/75	145.2	56.4	78.3	0	134.8	41.9	92.8	306	296	623
1975/76	141.1	52.1	81.5	0	133.5	39.0	94.6	365	345	536
1976/77	143.0	51.2	73.3	0	124.5	41.1	87.0	402	397	824
1977/78	100.0	39.1	48.9	0	87.9	44.4	88.0	421	415	714
1978/79	133.4	71.5	48.1	0	119.5	59.8	89.6	421	395	665
1979/80	66.9	44.2	21.6	0	65.8	67.2	98.4	425	350	560
1980/81	60.2	35.6	9.3	0	44.9	79.3	74.5	460	345	790
1981/82	108.9	59.9	21.9	0	81.9	73.2	75.2	500	518	643
1982/83	151.4	90.5	36.9	0	127.4	71.0	84.1	520	467	576
1983/84	113.8	68.3	24.7	0	92.9	73.5	81.7	450	608	1291
1984/85	105.1	41.5	10.6	0	52.1	79.8	49.5	620	800	1350
1985/86	75.8	41.9	10.2	0	52.1	80.5	68.7	1260	1170	1432
1986/87	110.4	57.3	13.6	0	70.6	81.1	64.0	1800	2052	1642
1987/88	120.0	51.3	12.2	0	63.5	80.8	52.9	1500	2106	1327
1988/89	98.4	15.5	9.5	0	25.0	62.0	25.4	1100	1652	1474
1989/90	129.9	25.8	11.4	12.2	49.4	52.0	37.2	1470-1650[3]	1960	2402
1990/91	74.5	18.4	5.5	5.1	28.9	64.0	38.8	1650	1960	2842
1991/92	84.2	0.5	0.8[1]	0.7[1]	2.0	25.0	2.4	1500-1700[2]	2400	2396

Source: PPMU, GPMB, GCU.
Note 1: Estimated figures.
2: GPMB offered D 1500/ton for the first six weeks and raised it to D 1700/ton later.
3: GCU buying price D 1470/ton; GPMB depot price was D 1650/ton.

195

Table III-2 Volume of Loans Issued, Seasonal and Medium Term to CPMSs, 1981-1992.

Years		Seasonal: Kind: Fertilizer	Seasonal: Kind: Seeds & Pesticides	Seasonal: Cash for Labor Expenses	Medium Term Equipment & Machinery[1]	Total	Repayment %[2]
		(1)	(2)	(3)	(4)	(5)	(6)
				(in '000 dalasis)			
				Pre Reorganization			
1981/82	(RDPI)	755	3,090	1,428	0	5,273	55
1982/83	(ADPI)	0	0	3,440	0	3,440	89
1983/84	(ADPI)	0	0	5,194	0	5,194	60
1984/85	(ADPII)	2,636	2,615	4,540	0	9,791	53
1985/86	(ADPII)	1,128	481	0	0	1,609	87
1986/87	(ADPII)	3,400	7,692	280	431	11,803	77
1987/88	(ADPII)	5,962	0	0	972	6,934	81
				Post Reorganization			
1988/89	(ADPII)	1,554	0	356	501	2,411	48
1989/90	(ADPII)	643	44	1,087	1,533	3,307	65
1990/91	(ADPII)	996	38	1,380	585	2,999	61
1991/92	(ADPII)	1,699	673	1,144	200	3,716	NA

Source: GCU.
Note 1: Includes donkey carts, horse carts, ox-carts, sine-hoes, occidental hoes and super seeders.
2: Includes all 86 CPMSs.

Table III-4 Operational Status, Membership Structure, Capital Base and Loans Issued for Selected CTCSs, as of October 1987.

	Items	Amount (%)
(1)	Operational Status (No. of CTCS)[1]	
	a. Active	31 (62)
	b. Dormant	19 (38)
	c. Total	50 (100)
(2)	Membership Structure (# of members)[2]	
	a. Men	353 (12)
	b. Women	2,514 (88)
	c. Total	2,867 (100)
(3)	Capital Base (in dalasis)[3]	
	a. Shares	31,301 (6)
	b. Thrift Savings	518,828 (94)
	c. Total Capital	549,828 (100)
(4)	Loans Issued (in dalasis)[4]	
	a. Oustanding loans:	
	(i) Amount	601,489
	(ii) Percent of capital base	116
	b. Overdue loans[5]	
	(i) Amount	326,048
	(ii) Percent of capital base	63
	(iii) Percent of outstanding loans	54

Source: ACCOSCA, 1990.

Note 1: Sample size in 50 CTCSs. A CTCS that recorded a financial transaction after October 1987 was considered active.

2: Sample size in 40 CTCSs.

3: Sample size in 48 CTCSs.

4: Sample size in 35 CTCSs.

5: All unrecovered loans issed before October 1987.

Table III-3 Interest Rates Charged to GCU, CPMS and Members by Various Sources, 1980-1992.

Years	Rates Charged to GCU by:			Rates Charged to CPMS by GCU	Rates Charged to Members by CPMS
	GPMB	GCDB	ADP II		
	(1)	(2)	(3)	(4)	(5)
			(in percent)		
1980-84	0	9	-	0	0
1984/85	21	17	0	11	13
1985/86	18	21	0	11	13
1986/87	18	21	0	22	24
1987/88	19	24	0	22	24
1988/89	19	18	0	18	24
1989/90	-	-	0	13	15
1990/91	-	-	0	13	15
1991/92	-	-	0	16	21

Source: GCU.
GPMB: Gambia Produce Marketing Board; GCDB: Gambia Commercial and Development Bank; ADP II: Agricultural Development Program II funded by World Bank.

Table III-5 Operational Status, Loans Outstanding and Capital Base of Individual CTCS.[1]

Name of Society	Proposed/ Registered with Doc.	Active/ dormant[2]	Loans Outstanding as of Oct. 1987	% Loans Overdue[3]	Capital (as of Oct. 1987, Savings & Shares)
	(1)	(2)	(3)	(4)	(5)
Dockworkers	R	A	125,487.60	30	135,345.56
Santa Yalla	R	A	65,010.00	0	87,695.00
Banul Women Retailers	R	A	60,580.00	60	52,019.46
Dimbalantch	R	A	20,648.89	20	42,427.89
Poultry Farmers	R	A	32,326.00	100	24,137.50
Soldiertown Dyers	R	A	38,680.00	64	20,010.58
Serrkunda Women Dyers	R	A	23,210.00	100	17,542.45
Denton Bridge	R	A	12,430.00	72	13,346.59
Kaur Women	R	D	43,775.00	100	10,788.50
Basse Women	R	D	6,255.00	100	9,316.61
Half Die Dyers	R	A	7,420.00	42	8,666.10
Soldiertown Norrankats	R	A	10,670.00	60	8,371.53
Barra Young Women	R	A	8,463.00	?	7,880.00
Carpenters New Society	R	D	11,840.00	100	7,847.88
Bakau Women	R	A	7,159.97	100	7,042.25
Essau Women	R	A	5,293.00	29	6,069.55
Georgetown Women	R	A	60,842.50	28	5,939.85
Ker Galloh Women	R	A	6,352.00	14	5,421.50
Faraba Banta	R	A	2,377.00	100	5,345.00
Banjul Seamstress	R	A	5,497.00	63	5,158.75
Sukuta Women	R	A	255.00	100	5,089.00
Barra Women	R	R	18,160.00	100	4,712.06
Boka Helat	R	A	4,010.00	100	4,628.36
Sibanor Women	R	D	1,840.00	100	4,345.75
Pirang Women	R	A	800.00	100	3,722.00

(continued next page)

Table III-5 (cont.)

Name of Society	Proposed/ Registered with Doc.	Active/ dormant[2]	Loans Outstanding as of Oct. 1987	% Loans Overdue[3]	Capital (as of Oct. 1987, Savings & Shares)
	(1)	(2)	(3)	(4)	(5)
Basori Women	R	D	0	0	3,625.00
Karantaba Women	P	A	-	-	3,539.75
Half Die Norrankats	R	R	2,780.00	100	3,141.34
Bana Bana	R	D	2,193.00	100	3,064.84
Kafuta	P	A	-	-	2,810.00
Gambia Bee Keepers	P	A	-	-	2,725.75
Kuntaya Women	R	A	264.00	100	2,576.72
Sotokoi Mandina	P	A	1,215.00	0	2,314.25
Atlantic Fishermen	R	D	0	0	2,244.00
Lamin Women	PP	A	-	-	2,235.00
Tambasansang Women	R	D	-	-	2,006.00
Yakarr Women	R	A	2,805.00	100	1,998.83
Bantanto Women	R	D	7,965.00	100	1,930.00
Gunjur Bajo Jarra	R	A	2,910.00	59	1,891.35
Serrekunda Market Garden	R	D	2,814.00	100	1,886.01
Gunjur Oil Palm & Bee Keeping	R	D	0	0	1,848.50
Brikama Women	R	A	2,972.00	100	1,719.50
Bijilo Women	R	D	3,330.00	100	1,575.99
Brufut Women	R	D	1,323.00	100	1,318.26
Jarrol Women	P	D	-	-	1,090.00
Handicraft Producers	R	D	?	?	956.00
Bansang Women	R	D	0	0	335.00
Banujul Central Women	P	D	-	-	100.00
Busumbala Women	P	D	-	-	0
Yundum Women	R	D	0	0	0

Source: Report on the Review of The Gambia CU Movement, ACCOSCA, March 1990.
Note 1: Contains only those 50 CTCS active after Sept. 1988.
2: Active: if final transaction took place after October 1987.
3: Overdues: All unrecovered loans which were issued before October 1987.

200

Table III-6 Sources of Funds for the Credit Program at the GCU, 1981-1992.

Year	GCDB	GPMB	GCU	ADP II	Total
	(1)	(2)	(3)	(4)	(5)
			(in '000 dalasis)		
			Pre-Reorganization		
1981/82	4,518	755	0	-	5,273
1982/83	3,440	0	0	-	3,440
1983/84	5,194	0	0	-	5,194
1984/85	4,540	5,251	0	-	9,791
1985/86	481	0	0	1,128	1,609
1986/87	4,020	2,884	280	4,619	11,803
1987/88	NA	NA	0	6,934	6,934
			Post Reorganization		
1988/89	0	0	356	2,120	2,476
1989/90	0	0	2,910	1,445	4,355
1990/91	0	0	NA	NA	NA
1991/92	0	0	NA	NA	NA

Source: GCU.

Table III-7 ADP II Funds: Loans Outstandings and Disbursements for Agricultural Input Loans made by GCU.

Items	Outstanding (1989)	Disbursement (1989-90)	Disbursement (1990/91)	Outstanding (1991)
	(1)	(2)	(3)	(4)
		(in '000 dalasis)		
Operational	4,672	2,296	1,624	8,592
Capital	2,053	9	997	3,059
Buildings	-	3,790	-	3,790
Fertilizer	8,748	-	-	8,748
Seeds	746	-	675	1,421
Agricultural Equipment	5,438	969	1,522	7,929
Chemical	841	-	-	841
Total	22,498	7,064	4,818	34,380

Source: ADP II.

201

Table III-8 **Number of CPMS and Village Branches that Qualified to Receive Input Loans from the GCU, 1988-1992.**

Year	CPMS	Village Branches
	(1)	(2)
	(# of Units %)	
1988/89	5 (9)	65
1989/90	25 (46)	400
1990/91	27 (50)	396
1991/92	43 (80)	518
Total Number of CPMS: 54		

Source: GCU.

Table III-9 **Number of Qualified CPMS and Village Branches by Geographic Location, 1988-1992.**

Circle	No. of Registered CPMS	No. of Qualified CPMS				No. of Village Branches			
		88/89	89/90	90/91	91/92	88/89	89/90	90/91	91/92
	(1)	(2)	(3)	(4)	(5)	(6)	(7)	(8)	(9)
1. Brikama	8	1	6	6	7	11	102	92	74
2. Mansakonko	5	0	3	3	4	0	30	27	25
3. Barra	9	0	1	1	8	0	11	11	105
4. Kerewan	11	3	6	8	10	47	102	117	117
5. G.town-North	7	0	3	4	5	0	55	74	111
6. G.town-South	8	1	2	4	6	7	28	64	71
7. Bassa	5	0	4	1	2	0	72	11	15
Total	53	5	25	27	43	65	400	396	518

Source: GCU.

202

Table III-10 Number of Qualified Village Branches by Age of the Branches, 1989-1992.

Years	Age of the Branches				Total
	One	Two	Three	Four	
	(1)	(2)	(3)	(4)	(5)
			(# of Village Branches)		
1988/89	65	-	-	-	65
1989/90	335	65	-	-	400
1990/91	118	226	52	-	396
1991/92	334	74	62	38	518

Source: Compiled from GCU data.

Note: The figures need to be interpreted as follows: Of the 518 branches qualified in 1991/92, 38 were out of the 65 qualified in 1988/89, 62 out of the 335 qualified in 1989/90, 74 out of 118 qualified in 1990/91, and 334 that were newly qualified in 1991/92.

Table III-11 Total and Average Volume of Short Term and Medium Term Loans Disbursed, 1988-1992.

Years	Total Volume of Loans	Average Loan per CPMS[1]	Index for CPMS	Average Loan per Village Branch[2]	Index for Village Branch
	(1)	(2)	(3)	(4)	(5)
			(in '000 dalasis)		
1988/89	2411	482.2 (5)	100.0	37.1 (65)	100.0
1989/90	3307	132.3 (25)	27.4	8.3 (400)	22.4
1990/91	2999	111.1 (27)	23.1	7.6 (396)	20.5
1991/92	3716	86.5 (43)	17.9	7.2 (518)	19.4

1 Number of CPMS given in parenthesis.

2 Number of village branches given in parenthesis.

Table III-12 Volume of Loans Solicited and Approved by CPMS, Vlilage Branches and Applicants during 1991-92 Cycle.

CPMS	Volume of Loans: Solicited 91/92	Solicited 92/93	Approved 91/92	Approved 92/93	Approved/Solicited (Ratio) 91/92	92/93	Previous Recovery Rate (%) (1990-91) (RECOV) 91/92	92/93	Previous Groundnut Marketed (tons) (GNUT) 91/92	92/93	# Year in Program 91/92	92/93	Index 91/92
	(1)	(2)	(3)	(4)	(4)	(5)	(6)	(7)	(8)	(9)	(10)	(11)	(12)
	(in '000 dalasis)												
Brikama Circle													
1. Sukuta	34.75	1.3	21.02	1.3	0.60	1.00	51	35	111	167	3	4	1
2. Brikama	137.13	49.2	50.63	35.9	0.37	0.73	69	50	206	388	3	4	1
3. Faraba	210.48	44.1	91.20	22.1	0.43	0.49	94	82	334	324	3	4	1
4. Ndamban	102.99	5.9	64.44	5.9	0.63	1.00	87	71	559	412	4	5	1
5. Sibanor	45.86	18.8	29.95	11.1	0.65	0.59	81	69	476	436	3	4	1
6. Bwiam	60.06	25.1	21.55	5.1	0.37	0.20	60	32	191	110	3	4	1
7. Bondali*	88.20	74.8	30.43	34.5	0.35	0.46	95	99	280	232	1	2	1
Barra Circle													
8. Buniadu*	72.13	201.7	36.90	99.3	0.51	0.49	95	100	210	452	1	2	1
9. Medina S. Mass*	51.75	92.7	24.60	63.6	0.48	0.69	95	94	220	236	1	2	2
10. Pakua-Penku*	207.48	14.8	88.78	8.6	0.43	0.58	95	63	430	460	1	2	2
11. Passy Mamudjaw	184.99	198.3	94.59	164.1	0.51	0.83	-	96	500	504	1	2	1
12. Ndungu Kebbah*	252.71	27.1	109.68	16.7	0.43	0.62	95	54	671	201	1	2	1
13. Kuntaya*	240.55	116.3	121.66	70.8	0.51	0.61	95	76	530	208	1	2	1
14. Kerr Jarga*	281.13	85.5	129.61	53.6	0.46	0.63	95	77	551	183	1	2	1
15. Darsilameh Joka	282.37	90.3	141.28	60.8	0.50	0.67	88	76	836	279	3	4	1
Kerewan Circle													
16. Njawara	154.08	102.2	75.26	25.3	0.49	0.25	72	73	453	224	4	5	1
17. Salikene	23.73	123.2	11.77	84.8	0.50	0.69	69	84	407	135	3	4	1
18. Njaba Kunda	341.12	75.6	205.81	23.9	0.60	0.32	74	42	854	98	4	5	1
19. No Kunda	96.30	0.0	52.68	0.0	0.55	0.00	67	28	374	35	4	5	1
20. Illiasa*	253.89	24.2	121.69	25.6	0.48	1.06	95	80	322	24	1	2	1
21. Farrafenni	303.81	42.8	154.75	21.0	0.51	0.49	87	57	460	35	3	4	1
22. Minteh Kunda**	-	40.3	-	30.7	-	0.76	-	95	-	27	0	1	1

(Cont.)

CPMS	Volume of Loans: Solicited		Volume of Loans: Approved		Approved/ Solicited (Ratio)		Previous Recovery Rate (%) (1990-91) (RECOV)		Previous Groundnut Marketed (tons) (GNUT)		# Year in Program		Index
	91/92	92/93	91/92	92/93	91/92	92/93	91/92	92/93	91/92	92/93	91/92	92/93	91/92
	(1)	(2)	(3)	(4)	(4)	(5)	(6)	(7)	(8)	(9)	(10)	(11)	(12)
Mansakonko Circle													
23. Ngayen Sanjal	553.23	0.0	168.95	0.0	0.31	0.00	93	13	459	2	2	3	1
24. Sarakunda	278.34	0.0	156.42	0.0	0.56	0.00	92	22	593	3	3	4	1
25. Kataba	140.25	0.0	85.28	0.0	0.61	0.00	92	27	366	3	2	3	1
26. Saaba*	213.77	177.9	61.78	97.7	0.29	0.55	95	88	225	266	1	2	1
27. Jiffarong*	85.99	27.5	40.30	9.4	0.47	0.34	95	67	135	98	1	2	1
28. Burong	37.09	19.2	33.09	17.7	0.89	0.92	93	89	245	293	3	4	2
29. Bureng	81.39	0.0	32.52	0.0	0.40	0.00	76	10	262	10	3	4	1
30. Sankwia	145.55	0.0	76.14	0.0	0.52	0.00	90	44	234	16	3	4	1
G. Town North Circle													
31. Kaur	421.38	87.1	167.96	61.2	0.40	0.70	69	71	278	17	3	4	1
32. Njau*	496.42	124.1	163.15	67.7	0.33	0.55	95	96	181	18	1	2	1
33. Wassu*	411.87	84.2	114.68	39.7	0.28	0.47	95	17	257	2	1	2	1
34. Yoona	13.98	0.0	7.23	0.0	0.52	0.00	40	5	141	0	3	4	1
35. Chamen	229.50	59.8	80.02	12.4	0.35	0.21	64	67	87	7	2	3	1
36. Ballanghar**	-	29.5	-	15.5	-	0.52	-	68	-	4	0	1	1
37. Dingarai**	-	56	-	23.3	-	0.42	-	95	-	4	0	1	1
G. Town South Circle													
38. Mamdufona*	460.63	9.7	92.46	90.7	0.20	1.00	95	36	224	2	1	2	1
39. Sarasofie	203.78	0.0	117.35	0.0	0.58	0.00	96	56	468	83	2	3	2
40. Gallie Manda*	293.61	59.1	120.79	22.1	0.41	0.37	95	73	601	38	1	2	2
41. Dankunku	248.89	75.1	195.21	85.2	0.78	1.13	86	16	458	80	4	5	1
42. Kundang	521.07	0.0	124.26	0.0	0.24	0.00	79	23	215	7	2	3	1
43. Bansang	324.54	7.1	245.59	7.1	0.76	1.00	100	38	718	71	3	4	1
Basse Circle													
44. Bajakunda*	567.51	107.1	105.98	36.4	0.19	0.34	95	92	435	56	1	2	2
45. Sindowol	68.95	20.1	46.32	15.8	0.67	0.79	74	45	225	99	3	4	1
46. Banatenda**	-	7.7	-	7.7	-	1.00	-	95	-	43	0	1	1
47. Disandu**	-	5.7	-	3.1	-	0.53	-	95	-	57	0	1	2

Source: GCU.

* = Newly qualified for 1991-92 cycle.

** - Newly qualified for 1992-93 cycle. The recovery rates for newly qualified CPMSs were assumed to be 95 percent.

Table III-13A Determinants of Loan Size Rationing: Results of the Correlation Coefficient Analysis.

	RATIO	RECOV	GNUT	AGE	INDEX
	(1)	(2)	(3)	(4)	(5)
RATIO[1]	1.00000 (0.0)	0.35459 (0.0030)*	0.31300 (0.0094)*	-0.00232 (0.9850)	0.04872 (0.6932)
RECOV[2]	0.35459 (0.0030)*	1.00000 (0.0)	0.59858 (0.0001)*	-0.38568 (0.0012)*	0.22998 (0.0592)*
GNUT[3]	0.31300 (0.0094)*	0.59858 (0.0001)*	1.00000 (0.0)	-0.01591 (0.8975)	-0.00880 (0.9432)
AGE[4]	-0.00232 (0.9850)	-0.38568 (0.0012)*	-0.01591 (0.8975)	1.00000 (0.0)	-0.25043 (0.0394)*
INDEX[5]	0.04872 (0.6932)	0.22998 (0.0592)*	-0.00880 (0.9432)	-0.25043 (0.0394)*	1.00000 (0.0)

1: RATIO refers to the ratio of loan amount supplied to loan amount solicited by the CPMSs.
2: RECOV refers to the percentage of loans recovered.
3: GNUT refers to the quantity of groundnuts purchased by the CPMSs.
4: AGE refers to the number of years that a CPMS has been eligible for the credit program.
5: INDEX refers to the difficulty in accessing a CPMS. An Index of 1 is assigned to CPMSs that are physically accessible while 2 is assigned to CPMSs that are located deep in the bushes and are difficult to reach.
* Represents significance at 10 percent level. Figures within parenthesis refers to the significance level under which H0: $\rho = 0$ is rejected.

Table III-13B Determinants of Loan Size Rationing: Results of the Regression Analysis.

Variables	Co-efficient	T-ratio
	(1)	(2)
Dependent Variable		
RATIO		
Independent Variable		
Intercept	0.265 (0.092)	2.886*
RECOV	0.291 (0.159)	1.830**
GNUT	0.217 (0.197)	1.102
Sample Size	68	
R-Square	0.15	

* Significant at 5 percent level.
** Significant at 10 percent level.
Standard error given in parenthesis.

Table III-14 Average and Total Volume of Short Term and Medium Term Loans Disbursed to New and Old CPMS and Village Branches, 1988-92.

	Average Volume of Loans (in '000 dalasis)				Total Loans (in '000 dalasis)	
	CPMS[1]		Village Branches[2]			
Years	Old	New	Old	New	Old Units	New Units
	(1)	(2)	(3)	(4)	(5)	(6)
1988-89	-	477.656	-	36.743	0	2388.28
	(0)	(5)	(0)	(65)		
1989-90	122.658	134.817	9.435	8.049	613.29	2696.34
	(5)	(20)	(65)	(335)		
1990-91	118.632	79.164	9.367	3.354	2603.96	395.85
	(22)	(5)	(278)	(118)		
1991-92	88.902	82.266	13.045	3.941	2400.36	1316.25
	(27)	(16)	(184)	(334)		

1 Number of CPMS given in parenthesis.
2 Number of village branches given in parenthesis.

Table III-15 Repayment Performance on Current and Loans Overdue, 1981-1991.

Years	Loans Due[1]	Loans Recovered	% Recovered
	(1)	(2)	(3)
		('000 Dalasis)	
		Pre-Reorganization (includes 86 CPMSs)	
1981/82	5,414	2,982	55
1982/83	3,712	3,290	89
1983/84	5,598	3,376	60
1984/85	10,509	5,599	53
1985/86	1,762	1,181	87
1986/87	12,324	9,500	77
1987/88	NA	NA	81
		Post Reorganization	
88/89 (86 CPMS)	4,295	2,076	48
89/90 (25 CPMS)[2]	3,151	2,944	93
(54 CPMS)	4,403	3,187	72
(86 CPMS)	4,939	3,205	65
90/91 (27 CPMS)[3]	3,712	2,693	73
(54 CPMS)	4,433	3,005	68
(86 CPMS)	4,911	3,016	61
91/92 (44 CPMS)	6,018	3,176	53

Source: GCU.

Note 1: Includes principal and interest on current loans and overdue loans.

2: Repayment performance is reported for those 25 CPMSs that qualified for the program, 54 CPMSs that remained after 1988 and 86 CPMSs that were originally affiliated with the GCU since 1959. The 86 CPMSs includes the 54 and 25 CPMSs and the 54 CPMSs includes the 25 CPMSs.

3: Repayment performance is reported for those 27 CPMSs that qualified for the program, 54 CPMSs that remained after reorganization in 1988 and 86 CPMSs that were originally affiliated with the GCU since 1959. The 84 CPMSs includes the 54 and 25 CPMSs and the 54 CPMSs includes the 27 CPMSs.

Table III-16 Repayment Performances on Current Loans and All Loans Outstanding for the CPMS that Qualified for 1990-91 Loans from the GCU.

Circle/CPMS		Years 88/89	89/90	90/91	91/92
		(1)	(2)	(3)	(4)
			(Percent Repaid)		
I.	Basse Circle				
	1. Sudowol	93.1	95	74	45
	2. Bansang	95.1	100.0	100	38
II.	G. Town - South Circle				
	3. Dankunku	76.9	100.0	86	16
	4. Kudang	66.4	96.6	79	23
III.	G. Town - North Circle				
	5. Chamen	25.6	94.4	64	67
	6. Yoona	95.8	94.6	40	06
	7. Kaur	30.4	86	69	71
IV.	Monsokonko Circle				
	8. Bureng	95.7	100.0	76	10
	9. Burong	100	98.9	93	89
	10. Sankwia	81.6	100	90	44
	11. Farafenni	90.0	91.9	87	58
	12. Sara kunda	79.8	100.0	92	23
	13. N'Sanjal	47.4	95.0	93	13
	14. Kataba	68.5	98.3	92	27
V.	Kerewan Circle				
	15. Njawara	74.3	99	72	73
	16. Salikene	77.5	99.0	69	84
	17. Njab. kunda	94.7	98.6	74	42
	18. No kunda	100.0	100.0	67	28
VI.	Barra Circle				
	19. Darsilame joka	93.7	95.9	88	76
VII.	Brikama Circle				
	20. Sukuta	97.4	91.9	51	35
	21. Brikama	41.4	98.3	69	50
	22. Faranba	28.1	97.4	94	82
	23. N'demban	90.6	94.7	87	71
	24. Sibanor	87.3	91.5	81	69
	25. B'wiam	82.9	95.6	60	33

Source: GCU.

Table III-17 **Sampled CPMS: Qualification Status, Membership Size, Village Branches, Loans Issued and Repaid, and Groundnut Purchased in 1991-92.**

CPMS	Qualified Year[1]	Members		Village Branches		Loans[3]		Groundnut Purchase
		Total	Women	Registered	Qualified[2]	Issued[4]	Repaid[5]	
		(# members)		(# branches)		('000 dalasis)		(tons)
	(1)	(2)	(3)	(4)	(5)	(6)	(7)	(8)
Brikama	1990	1057	4	16	NA	132	66 (50)	388
Sukuta	1989	2122	3	16	14 (88)	155	50 (33)	159
N'demban	1988	850	3	11	6 (55)	147	101 (69)	414
N'Jawara	1988	532	94	12	7 (58)	160	111 (70)	223
Njabakunda	1988	700	70	32	22 (69)	366	176 (48)	96
Burong	1989	323	0	14	6 (43)	69	57 (83)	301
Kwinella	[1]	250	10	7	0 (0)	NA	NA	45
Njau	1990	954	100	51	10 (20)	170	150 (88)	18
Dinganai	1991	NA	NA	26	17 (65)	42	17 (41)	4
Brikama-ba	[1]	1500	400	25	0 (0)	46	5 (12)	8
Fatato	[1]	NA	NA	14	0 (0)	21	2 (8)	55
Baneang	1989	1386	550	21	21 (100)	227	103 (45)	70

Source: OSU survey.
Note 1: Not yet qualified. Loans issued for these CPMSs refers to loans outstanding from 1987/88.
2: Percentage of qualified to total villages registered is given in parenthesis.
3: Both seasonal and term loans are included.
4: Includes principal and interest dues.
5: Percentage of loans repaid to issued is given in parenthesis.

Table III-18 Alternative Roles of Key Agents on GCU Operations.

Markets/Agents		GPMB	FAO	NGOs	Senegal	Banks/ADPII
		(1)	(2)	(3)	(4)	(5)
Scenario I (favorable)						
a.	Output	IN[1]	IN	IN	Competitive	A[2]
b.	Input	IN	IN	IN	IN	A
c.	Financial	IN	IN	IN	IN	IN
Scenario II (unfavorable)						
a.	Output	A	IN	IN	Subsidized	IN
b.	Input	A	A	A	na[3]	IN
c.	Financial	A	A	A	A	IN

Note 1: Inactive.
2: Active.
3: Not applicable.

Figure III-1
Commodity (Input and Output) and Credit Flows through the Gambia Cooperative Union (GCU) in the Post ERP period.

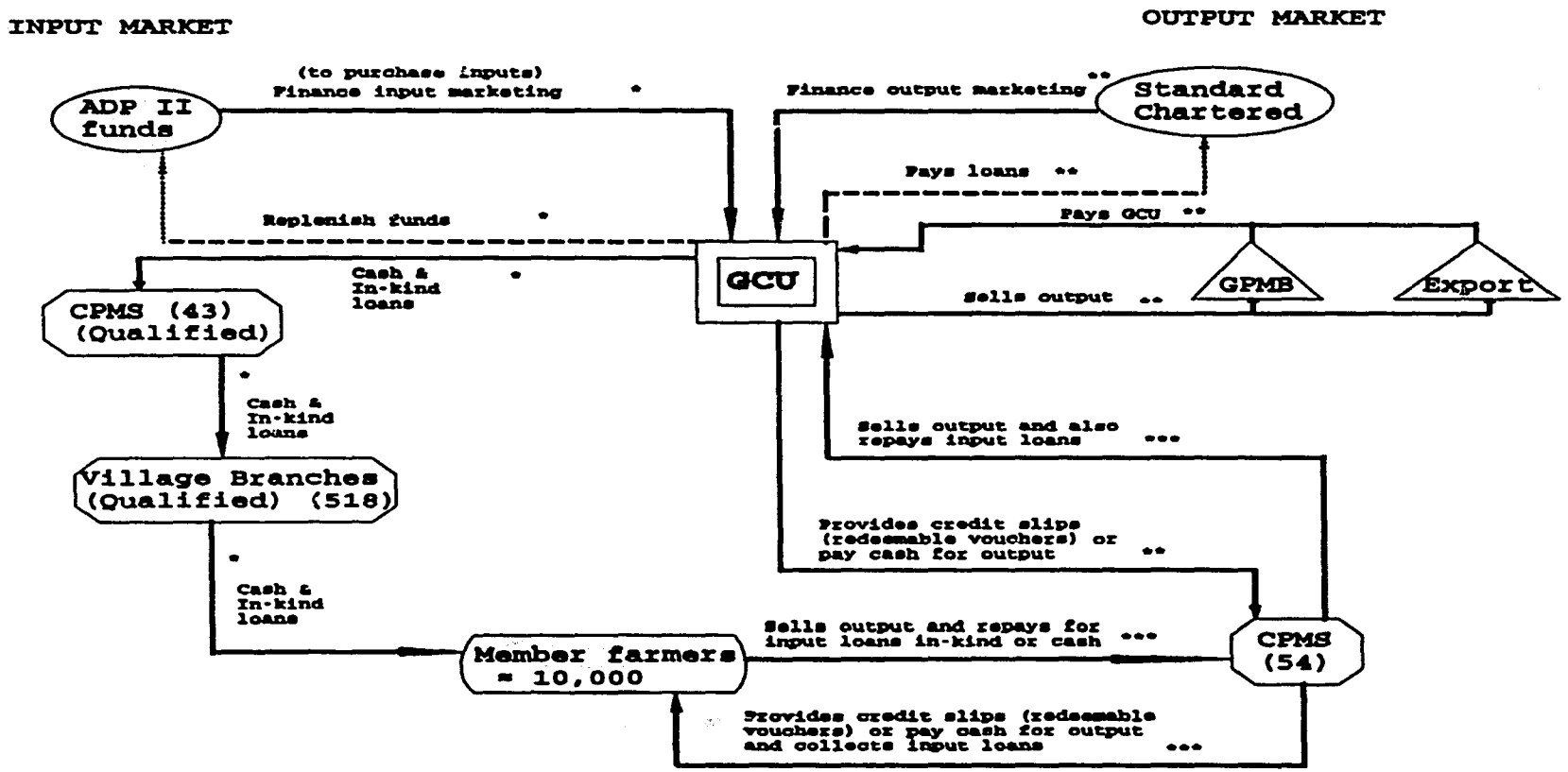

Notes:

1. o = Primary Creditor; ▢ = Retailers; ▢ = Input Consumers & Output Producers.
2. ADPII: Agricultural Development Program II; GPMB: Gambia Produce Marketing Board; CPMS: Cooperative Produce Marketing Societies.
3. Qualified CPMS and village branches represent those that qualified for 1991-92 loan cycle based on the 95% repayment rule.
4. Figures within parenthesis gives number of participants in the operations in 1991-92.

5. ⟶ Loans supporting input and output marketing operations are repaid by the GCU to its primary creditors.
6. * : represents input flows; ** : output flows; *** : represents input-output linked transactions.

212

Appendix Table III-1 **List of the CPMS Sampled by Their Status of Qualification in the Credit Program and Geographical Location.**

Circle		Name of CPMS	
		Qualified	Not Qualified
		(1)	(2)
I.	Brikama	N'demban Sukuta Brikama	None
II.	Kerewan	Njawara Njabakunda	None
III.	Barra	Kerr-Gumbo	Bakalar
IV.	Georgetown - North	Njau Dingarai	None
V.	Georgetown - South	Bansang	Brikama-ba
VI.	Basse	None	Fatato
VII.	Mansakonko	Burong	Kwinella
	Total	10	4

Source: OSU Survey

Appendix Table III-2 **Name and Location of Samples Villages in which Farmers/Kafos were Interviewed.**

No.	Division	No. Villages	Name of the Villages
	(1)	(2)	(3)
I	Brikama	3	Sukuta, N'demban-Jola, Besse
II	Mansakonku	2	Burong, Kwinella[1]
III	Barra & Kerewan	3	Panneh-ba, Foddakunda, Dipakunda, Kerr-Gumbo, Bakalar
IV	Georgetown (South)	3	Boraba
V	Georgetown (North)	2	Dingarai, Njau
VI	Basse	1	Fatoto
TOTAL		14	

213

Appendix Table III-3 Number of CPMS Affiliated with the GCU, 1964-1992.

Years	# CPMS	Additional	Total
	(1)	(2)	(3)
		Pre-Reorganization	
1964	38	0	38
1965	38	1	39
1966	39	7	46
1967	46	4	50
1968-71	46	0	50
1972	50	3	53
1973	53	1	54
1974	54	8	62
1975-77	62	0	62
1978	62	19	81
1979-82	81	0	81
1983	81	1	82
1984-85	82	0	82
1986	82	4	86
1987	86	0	86
	Post Reorganization		
1988[1]	86	-32	54
1989-92[2]	54	0	54

Source: GCU.
Note 1: 32 CPMS were either closed or merged with existing CPMS.
2: This includes all CPMS affiliated with GCU regardless of their qualification into the loans program.

Appendix III-4
Lending Conditions and Eligibility Criteria for the 1991/92 Agricultural Season[57]

The following are the major lending conditions and qualifying criteria that will apply to all loans made by GCU to CPMS and members for agricultural purposes in the coming season. Any variation of these will be communicated to the CPMS and others associated with this loan programme in advance of the lending period.

1. Lending Arrangements

GCU will provide resources on credit to affiliated CPMS which will in turn be onlent by the CPMS to individual members (or groups). These resources will be for agricultural production purposes only. This will give rise to a two level contractual arrangement with loan contracts between GCU and borrowing CPMS and other contracts between CPMS and their individual borrowing members (or groups).

2. Period of Loans

Loans will be either seasonal (a maximum of one year) or medium term loans (a maximum of five years). For medium term loans the principal amount will be repaid in 5 equal, annual installments starting in the first year and no grace period will be permitted.

3. Nature of Loans

Seasonal loans will be primarily for fertilizer but may also include seed, crop chemicals and cash to meet farm labor costs. Medium term loans will be primarily for various items of animal drawn equipment such as farm carts, seeders and sine hoes. Other types of loans may be provided by GCU depending upon the availability of funds.

4. Interest Rates

Interest will be charged to the end users of loans at the following rates:

Seasonal Loans	-	21% per annum
New Medium Term Loans	-	18% " "

[57] Source: GCU.

Previous Medium Term Loans	-	15%	"	"
Arrears brought forward since 1987/88 season	-	24%	"	"

CPMS will be paid by GCU at the end of the recovery period an amount equal to 5% of the value of the current loan installment recovered (this includes arrears brought forward since 1987/88) in order to meet their own internal loan management costs.

5. Repayment of Loans

All loans will be repaid by members to the CPMS where the loan was drawn and will normally be made by cash deductions from the proceeds of produce sales. This, however, does not preclude any member from making loan repayments in cash. CPMS will repays loan to GCU in cash and amounts will be deducted by GCU from crop purchase finance sent to each repaying CPMS. The final date for the repayment of both seasonal loans and medium term loan installments is the 31st March 1992. Any loans disbursed during the dry season will have a different repayment date depending on the date of disbursement and periodicy of the loan.

6. Borrowing Member's Contributions

Members are not required to make any financial contribution in respect of seasonal loans and may draw 100% of their requirements. In respect of medium term loans a down payment in cash to the approximate value of 10% of the retail price is required for all items. This must be paid in full to the CPMS at the time of delivery and these amounts will in turn be remitted by the CPMS to the GCU.

7. Security for Loans

Loan made by GCU will be secured by the assets of the CPMS which may include any payment owed by GCU in respect of farm produce purchased. Members borrowing from the CPMS will not normally be expected to provide any security beyond a pledge to market the produce, for which the loans are taken, to the same CPMS.

8. Eligibility Criteria

8.1 In respect of CPMS

a. No CPMS will qualify for agricultural loans from GCU unless it shows itself capable of conducting its produce marketing and other commercial activities on a sustainable financial viable basis.

b. In addition, all CPMS must ratify with GCU the "GCU Bilateral Loan Management Agreement" which regulates the manner in which agricultural loans are managed on the basis of the Village Branch Group Loan system.

c. Any CPMS wishing to enter the Village Branch Loan system for the first time must have discharged a minimum of 95% of what is due for payment in terms of principal and interest on all loans received from GCU during and since the 1987/88 season. Amounts to be repaid on loans still owing from before the 1987/88 season will be negotiated separately.

8.2 In respect of Village Branches

a. Each Village Branch must agree to establish a 5 man loans committee with the primary function of screening loan applicants and supervising loans. The election of this committee must be in accordance with the wishes of the CPMS Executive Committee and Village Branch members.

b. No Village Branch will qualify for further loans until it has repaid a minimum of 95% of principal and interest due on all previous loans drawn under the Village Branch Group Loan system.

8.3 In respect of individual members

Other than the standard requirement that each borrower is a registered member of the CPMS, Village Branch Loan Committees should determine the eligibility criteria for the individual members. However, the following is proposed as a guide.

a. Each individual is free of any previously incurred debt to the CPMS.

b. Each individual has marketed produce to his CPMS during the 3 previous seasons.

c. Each individual has the productive capacity to repay the loan both in terms of the size of his land holding and his managerial ability. In this respect, it is proposed that the quantum of loans to individuals do not exceed one third of the total value of their marketable produce.

9. Group Loans

Within the framework of its lending policy GCU is developing a system of lending to groups of farmers such as Kafo Farms and Womens' Groups, etc. For such a group to qualify for a loan it must be thoroughly screened by the Village Branch Loans Committee who must consider the group cohesive and with the productive capacity to repay the amount of any loan advanced. The group must also have the approval of the CPMS Executive Committee. In order to meet the requirements of cooperative legislation and as the group loan will be approved and disbursed in the name of the group leader, it is only the group leader who need be a registered member of the CPMS from where the loan is drawn. Each member of the group will be jointly and severally responsible for the repayment of amounts owed by other group members.

Appendix Table III-5 List of CTCSs that Qualified in 1989 to Form CUs.

1.	Diambalollateh Women CTCS
2.	Dock Workers of Kaur port CTCS (men)
3.	George town Women's CTCS
4.	Kuntaya Women's CTCS
5.	Poultry Farmers CTCS
6.	Santa Yalla CTCS
7.	Tambasangsang Women's CTCS
8.	Sotokoi Mandina Women's CTCS
9.	Gambia Beekeepers CTCS

Source: ACCOSCA, 1990.

Appendix Table III-6 Growth of Village Branches that Qualified for Loans from GCU, 1988 to 1992.

Circle/CPMS		Years[1]			
		1988-89	1989-90	1990-91	1991-92
		(1)	(2)	(3)	(4)
			(No. of Village Branches)		
I.	Basse Circle				
	1. Suduwol	-	15	11	6
	2. Basse	-	23	0	0
	3. Jahkunda	-	18	0	0
	4. Bana Tenda	-	16	0	0
	5. Baja Kunda	-	-	-	9
II.	Georgetown-South				
	1. Bansang	-	19	21	21
	2. Dankunku	7	9	9	5
	3. Kundang	-	-	16	13
	4. Sare Sofie	-	-	18	19
	5. Galleh Mada	-	-	-	9
	6. Mamud Fana	-	-	-	4
	7. Brikama-ba	-	-	-	-
	8. Fulla Bantang	-	-	-	-
III.	Georgetown-North				
	1. Kaur/Balanghar	-	19	18	34
	2. Yoona	-	16	16	1
	3. Koli-kunda	-	20	22	0
	4. Chamen	-	-	18	5
	5. Njau	-	-	-	40
	6. Wassu	-	-	-	31
	7. Karawtabe	-	-	-	-
IV.	Mansakonko				
	1. Burong	-	13	12	8
	2. Bureng	-	6	5	3
	3. Sankwia	-	11	10	6
	4 Jiffarong	-	-	-	8
	5. Kwinella	-	-	-	-
V.	Kerewan				
	1. Njawara	12	12	4	7
	2. Njaba Kunda	24	32	32	23
	3. Salikene	-	13	13	1
	4. Farafenni	-	20	18	18
	5. Sare Kunda	-	8	9	8
	6. No Kunda	11	17	17	6
	7. Kataba	-	-	8	10
	8. Ngayen Sanjal	-	-	16	20
	9. Saaba	-	-	-	14
	10. Illiassa	-	-	-	10
	11. Dibba Kunda	-	-	-	-

Appendix Table III-6 (cont.)

Circle/CPMS	Years[1]			
	1988-89	1989-90	1990-91	1991-92
	(1)	(2)	(3)	(4)
		(No. of Village Branches)		
VI. Barra				
1. Darsilameh Joka	-	11	11	8
2. Kerr Jarga	-	-	-	10
3. Ndungu Kebbah	-	-	-	14
4. Buniadu	-	-	-	12
5. Medina S. Mass	-	-	-	8
6. Pakau-Penku	-	-	-	11
7. Passy Mamudjaw	-	-	-	25
8. Kuntaya	-	-	-	17
9. Banacar	-	-	-	-
VII. Brikama				
1. Sukuta	-	13	9	7
2. Brikama	-	16	19	11
3. Faraba-Banta	-	15	15	15
4. N'Demban	11	11	7	7
5. Sibanor	-	26	22	6
6. Bwiam	-	21	20	7
7. Bondali	-	-	-	21
8. Gunjar	-	-	-	-
Total	65	400	396	518

Source: GCU.
Note 1: "-" indicates that the CPMS is not qualified for loans in that year.

CHAPTER FOUR

THE FAO INPUT SUPPLY SYSTEM

by

Geetha Nagarajan

and

Richard L. Meyer

222

Table of Contents

I. INTRODUCTION 1

II. METHODOLOGY OF THIS STUDY 3

III. ANALYSIS 3

1. The Network 4
   A. The Participants 4
      a.) Importation of Inputs 4
      b.) Retailers of Inputs 5
   B. Credit Flows through the Network 7
      a.) The Revolving Fund 7
      b.) Importation of Fertilizers 7
      c.) Retailing of Inputs 8
      d.) Input Credit through the Sample PDs 8

IV. STRENGTHS AND WEAKNESSES OF THE FAO PROGRAM AND PROPOSED CHANGES 9

1. Strengths 9

2. Weaknesses 11
   A. Problems with the PDN 12
      a.) The Choice of PDs 12
      b.) Limited Liability for the PDs 13
      c.) Rudimentary Financial Technology 13
      d.) Poor Record-Keeping Procedures 14

3. Changes Being Proposed for the FAO Program 15
   A. Strengthening the PDA 15
   B. Expansion of the PDN 15
   C. Uniform Accounting Procedures 15
   D. Establish a Guarantee Fund 15
   E. Encourage the NGOs to provide input credit 16

4. Integration of the FAO Program with Other Institutions 16
   A. Integration into the Department of Agriculture (DA) 16
   B. Integration with WID 16

222

V. CONCLUSIONS AND RECOMMENDATIONS 17

1. Scenario One 17
   A. Guarantee Fund 17
   B. PD Network 18
   C. Future Fertilizer Development Programs 19

2. Scenario Two 19
   A. Guarantee Fund 19
   B. PD Network 19
   C. Future Fertilizer Development Programs 20

REFERENCES 21

List of Tables

Table IV-1 Sample of Private Dealers (Affiliated with FAO) Interviewed for the Study. 24
Table IV-2 Quantity of Fertilizer Imported through the FAO Channel, 1989-1991. 25
Table IV-3 Value of Inputs Distributed through the PDA Under the FAO Channel by Type of Agent, 1989-1991. 26
Table IV-4 Sample Private Dealers: Crops Financed, Modes of Sale and Client Type by Gender. 27

List of Figures

Figure IV-1 Financial Services by the FAO to Various Agents Involved in Fertilizer Marketing in The Gambia 23

224

List of Appendices

Appendix IV-1 Objectives of the Fertilizer Use, Promotion, Distribution and Credit Assistance Project(GCPF/GAM/014/DEN) 29
Appendix IV-2 List of Studies on the FAO in The Gambia 31
Appendix IV-3 Block Demonstration Concept 33
Appendix IV-4 Technical Sales Adviser, Terms of reference 37
Appendix IV-5 Terms of Trade, Agricultural Input Office (DAS/FAO FP) ... 39
Appendix Table IV-6 Previous Experience of Sample Private Dealers by Gender and Type of Activities. 41
Appendix Table IV-7 Number of Retailers in the PDN and Their Repayment Performance, 1989-90. 41
Appendix VI-8 Private Dealer Criteria for Retailers 43
Appendix IV-9 Concept of Guidelines for Guarantee Funds: The FAO Design 45

ACRONYMS USED IN CHAPTER FOUR

AATG	Action Aid, The Gambia
AIO	Agricultural Input Office
BD	Block Demonstration
CDP	Cotton Development Program
CPMS	Cooperative Produce Marketing Societies
D	Dalasis
DA	Department of Agriculture
ERP	Economic Recovery Program
FAO	Food and Agriculture Organization
GCU	Gambia Cooperative Union
GOG	Government of The Gambia
GPE	Groundnut Private Entrepreneurs
GPMB	Gambia Produce Marketing Board
GRT	Gambia River Transport
JP	Jahally-Pacharr Rice Development Project
MGA	Maize Growers Association
NGO	Non-Governmental Organization
PD	Private Dealers
PDA	Private Dealers Association
PDN	Private Dealers Network
PE	Private Entrepreneurs
RPE	Registered Private Entrepreneurs
TSA	Technical Sales Advisors
UPE	Unregistered Private Entrepreneurs
URDIP	Upper River Division Irrigation Project
WID	Women in Development

226

CHAPTER FOUR
THE FAO INPUT SUPPLY SYSTEM*

I. INTRODUCTION

The Food and Agriculture Organization (FAO) is a United Nations organization that has been involved in supplying agricultural inputs on credit to farmers and farmers' organizations in The Gambia.[1] Beginning in the late 1970s, the FAO has been coordinating with Government of The Gambia and agricultural extension services to develop farmer's awareness about modern agricultural practices and fertilizer use. While the FAO launched a project "Fertilizer Use, Promotion, Distribution and Credit Assistance (GCPF/GAM/014/DEN)" in 1981 with external funds from the Government of Denmark, its direct involvement in the input and credit markets was prompted by the liberalization of the agricultural inputs market with the implementation of the Economic Recovery Program (ERP) in 1985.[2]

The FAO actively advocated deregulation of the agricultural inputs market and encouraged participation of private entrepreneurs (PEs) in its distribution networks. With the lethargic response from PEs to independently enter into the inputs market due in part to capital constraints,[3] and the reluctance of domestic banks to finance private entrepreneurs to enter the market or farmers to purchase agricultural inputs in rural areas,[4] the FAO assumed the role of a supplier of agricultural inputs, such as fertilizer, seeds, plant protection chemicals, etc., on credit beginning in 1988. The FAO intended to initially stimulate the participation of the PEs in the market by the provision of financial and physical infrastructure, and to gradually transfer the responsibility over to them.

---

* We acknowledge with appreciation the valuable assistance provided by Mr. Sven Christenssen and Mr. Amadou Sowe, and the 12 Sample Private Dealers in conducting this study. The usual disclaimers apply.

[1] The FAO is the primary international organization involved in assisting to provide inputs on credit in The Gambia. The services are channeled through the FAO office located within the Agricultural Input Office (AIO) which is attached to the Department of Agriculture (DA), The Gambia. To avoid confusing FAO's activities in the AIO office with DA, this report refers to FAO as the alternative supplier of inputs on credit.

[2] See Appendix 1 for the specific long-term objectives of this project.

[3] The response by private entrepreneurs to become involved in the agricultural input market, especially fertilizer, has been limited due to capital constraints, uncertainty in government fertilizer policy, low profit margins compared to other commercial activities, high carry-over and market risk, and lack of experience in input marketing (see Chapters VII and VIII for details).

[4] See Chapter I for the reasons for the lack of access in rural areas to the formal financial institutions in The Gambia.

227

Whereas the FAO is not a specialized financial intermediary and its financial services are limited to the provision of agricultural inputs on credit to private entrepreneurs, the value of this credit in the total agricultural credit market has been substantial.[5] Furthermore, its role in encouraging the participation of the private sector in the rural financial market has been significant. To help incorporate private entrepreneurs into fertilizer marketing, especially at the retailer level, the FAO established a Private Dealer Network (PDN) in 1988. The private dealers (PDs) function as retailers to extend in-kind loans such as fertilizers, farm machinery, and seeds to farmers.

There has been a growing interest among policy makers in finding private sector solutions to improve agricultural marketing efficiency in developing countries. The FAO's experiment with PDs helps to identify several issues encountered in incorporating them into the input market in The Gambia. Furthermore, with a large loan demand from farmers to purchase agricultural inputs and with the almost complete absence of formal banks in rural areas, it is important to analyze how this type of program functions to supply loans to the agricultural sector.[6] While several studies exist on the FAO in The Gambia,[7] there is a dearth of documented information on FAO's input marketing system, especially through its innovative PDN and the associated credit provided by it. Therefore, this study analyzed the FAO's PDN method of supplying production inputs on credit, especially considering the possible withdrawal of external support from the FAO and the implications for full privatization of the fertilizer sector.[8] The study was undertaken not to evaluate the fertilizer program, but rather to assess its financial arrangements because in-kind loans for inputs represent an important alternative credit source for farmers. However, to understand this credit source, it was necessary to analyze aspects of the entire program.

After outlining the methodology of the study in the next section, the participants in channelling inputs and credit through the FAO channel are described. The strengths and weaknesses of the FAO Program and changes proposed or underway are discussed in section four. This study then ends with a section on conclusions and recommendations.

---

[5] See Table II-2 in Chapter II.

[6] The majority of farmers buy fertilizer on credit from sources such as the Gambia Cooperative Union (GCU), PEs attached to FAO, government programs, etc. For example, in 1990-91, 85% of FAO's fertilizer sales were on credit through PDs, while 80% of the fertilizer supplied through the GCU was on credit (see FAO, 1992).

[7] Several studies exist that trace the evolution of FAO's involvement in Gambian agriculture, document the reasons that guide the operational procedures followed by the FAO, and provide recommendations on technical aspects of fertilizer marketing through FAO (see Appendix 2 for a list of these studies).

[8] Consult references listed in Appendix 2 for details of the FAO operations that are not discussed in this section.

II. METHODOLOGY OF THIS STUDY

Although there is a relatively large amount of general information about FAO's program in the inputs and credit markets, there is limited detailed information about these activities, especially data on the volume of business and loan repayment performance of the individual PD's with FAO and the loan repayment performance of farmers with the PDs. Although the details of all transactions between FAO and the individual PDs are currently being compiled in a uniform fashion, the data were not available for this study. Therefore, a rigorous examination about the feasibility of the PDN as a viable alternative supplier of inputs on credit is difficult. Nonetheless, enough data were obtained to develop some fairly clear impressions about the possibility of using the PDN to regularly supply inputs on credit in rural areas. This study is based on the aggregate data provided by the FAO, interviews conducted with the local FAO officials, selected PDs affiliated with the FAO and a few of the farmer beneficiaries, and consultant reports.

The selection of the PDs that were interviewed for this study was based on several factors including their (i) geographic location of operations, (ii) gender, (iii) proximity to other financial networks, and (iv) unofficial information on their past loan repayment performance with the FAO. The list of sample PDs included in the study is provided in Table IV-1. They were interviewed by the senior author during April 1992 to gather information on infrastructure facilities, marketing activities, type of clients, terms and conditions of credit contracts, and the constraints they faced. Since the majority of them either did not maintain accurate records or were reluctant to share them with an outsider, quantitative information on their volume of business, loan transactions, and loan repayment performance could not be collected.

III. ANALYSIS

Currently, the FAO functions as one of the major channels supplying agricultural production inputs in The Gambia along with the Gambia Cooperative Union (GCU), the Government of The Gambia (GOG) and several registered and unregistered private entrepreneurs.[9] The marketing of inputs through the PDN is facilitated by credit from the FAO. The operational procedures of the FAO for the importation and distribution of agricultural inputs through the PDN and the terms and conditions of the credit provided are discussed in this section. Specifically, all the participants in the FAO input supply channel are first described to illustrate the role of the PDN. This is then followed by a detailed examination of the input and credit flows through the PDN as revealed by the aggregate FAO data and by observations obtained from the survey of the 12 PDs.

---

[9] Consult Chapter VII in this report for a detailed report on the fertilizer marketing channels in The Gambia.

1. The Network

A. The Participants

The FAO began its involvement in the distribution of agricultural inputs, especially fertilizer, on behalf of the Department of Agriculture in 1985 (FAO, 1991). The FAO intended to identify efficient agents at all marketing levels to establish a network for selling inputs on credit. The GCU with its widespread Cooperative Produce Marketing Society (CPMS) network was considered as an option to distribute fertilizer imported by the FAO. A total of five CPMS were chosen in 1988-89 to distribute inputs to farmers. The inputs were given on credit to the GCU.[10] However, with the restructuring of the GCU in 1988, the FAO decided to establish its own network by incorporating private entrepreneurs at the retailer level. Consequently, a total of 36 PDs were selected from all over The Gambia in 1988-89 and they became operational as the PDN in 1989-90. Currently, the PDN is composed of several heterogenous agents at various levels in the marketing channel for importation and distribution. The importation of inputs is primarily carried out by the FAO and established private food importers, the wholesaling is done by the FAO, and the retailing is primarily conducted by the PDN.

The PDs in the PDN formed a legally backed Private Dealers Association (PDA) in 1989. Although the PDA was formed as a coordinating body for the PDs, the FAO has maintained responsibility of coordinator, monitor, financier of the PDN, and importer and wholesaler of agricultural inputs. The coordinating functions of the FAO included: (i) demonstrating improved fertilizer use technologies to PDs and their clientele; (ii) conducting training activities for the PDs; (iii) gathering and disseminating market information to the PDs, especially regarding the for inputs; (iv) distribution of inputs to PDs; and (v) provision of technical advice to PDs.

a.) Importation of Inputs

While the FAO imports fertilizer directly from foreign suppliers, part of the importation has been carried out through selected private food importers, such as S. Madi and Mukthara enterprises, working as agents for the FAO. Table IV-2 shows the quantity of fertilizers imported into The Gambia through the FAO channel. A total of 3207 tons of fertilizer was reported to have been imported into The Gambia in 1991-92. Of this, the FAO accounted for 30 percent. Table IV-2 shows that all of the FAO imports were conducted through private entrepreneurs in 1991-92 in contrast to previous years.

---

[10] The funds to finance the imports and provide in-kind credit to GCU were drawn from the revolving fund established by the FAO in 1988.

b.) Retailers of Inputs

The FAO functions as the wholesaler for the inputs. The set of primary retailers for the FAO is composed of 36 PDs of the PDN, 76 PDs serving nearly 5000 members of the Maize Growers Association (MGA),[11] 4 Block Demonstration Villages (BD), the two NGOs of Action Aid (AATG) and Women in Development (WID), and government programs such as the Jahally-Pacharr rice development project (JP). These primary retailers supply inputs to farmers through their established secondary and tertiary retailer networks. While fertilizer is the major input supplied through the FAO channel, limited quantities of seeds, pesticides, and farm implements were also distributed, Table IV-3 gives the value of inputs distributed through various agents involved in the FAO channel. It is obvious that PDs were the major retailers for the FAO program.

The FAO functions only as a wholesaler for the AATG, WID and JP which are physically and financially supported by external agencies including foreign donors and the Government of The Gambia. While the BD program is part of FAO's fertilizer trial programs, the inputs were supplied on cash or credit through the PDs.[12] The PDs, on the other hand, were selected and supported through a revolving fund created by the FAO. Therefore, the discussion in this chapter about the retailing of inputs through the FAO channel is limited to the PDs.

i) The PDs

In order to develop a well knit retail network of private entrepreneurs as retailers, the FAO established the PDN in 1988. A total of 36 PDs, including 10 women, were selected throughout the country to serve as primary retailers. The selection of PDs was supposed to be based on the entrepreneur's infrastructure facilities available to store and distribute fertilizer, ability to deal with formal financial institutions and their reputation in the community. These 36 PDs along with 76 PDs of the MGA and four BD villages formed a Private Dealers Association (PDA) in 1989. The PDA is supposed to be responsible for (i) disseminating market information among its members, (ii) conducting training programs for the PDs, and (iii) employing support staff such as the Technical Sales Assistants (TSA).[13]

Table IV-3 gives the value of agricultural inputs distributed through the PDN beginning in the 1989-90 season. The FAO, based on the demand for inputs estimated by the Department of Agriculture, supplies the inputs on a consignment basis to the PDs. The FAO maintains ownership of the inputs supplied to the PDs until they are sold. An interest

---

[11] MGA covers about 107 villages in the Upper River Division and MaCarthy Island Division. This association was formed in 1988 to improve the production of maize in The Gambia.

[12] The BD program is outlined in Appendix 3.

[13] See Appendix 4 for the functions of the TSAs.

231

rate of 1.5 percent per month (18 percent per annum) was charged only on the actual quantities of inputs sold by the PDs. The unsold stocks are returned to the FAO at no cost to the PDs.[14] The PDs are not required to make any partial down payment on the consignment. They were required to repay into the FAO revolving funds the principal and interest due on the actual quantity of inputs sold by the end of the season. This marketing mechanism based on a consignment system transfers the marketing risks from the PDs to the FAO (see Appendix IV-5 for the terms and conditions of input sales from the FAO to the PDs).

The storage facilities and transportation required by the PDs to carry out their retail operations is currently provided by the FAO in coordination with government parastatals such as the Gambia Produce Marketing Board (GPMB) and the Gambia River Transport Ltd., (GRT). While the PDs are required to pay for the transport and storage services provided through the FAO, these costs are often subsidized by the FAO. Therefore, the operational costs of the PDs appear to be low and underestimate the true costs that would exist without FAO's involvement.

ii) Analysis of the Sample PDs

To assess the performance of the PDs and to identify their constraints, a total of 12 PDs, seven men and five women, were interviewed for this study. The results can be summarized as follows:

- While 50 percent of the sample was previously engaged in small-scale food retailing (rice, sugar, cooking oil, etc.)[15] and 40 percent in farming and non-farming activities, only 9 percent were previously involved in fertilizer trading (see Appendix IV-6 for details).[16]

- Some PDs reported owning small storage rooms at the back of their houses and donkey carts to transport products within a limited geographic areas. However, they lacked large storage and transportation facilities for use in marketing agricultural inputs.

- It was difficult to gather quantitative information on the volume of business from the sample PDs. The available information showed that an average of 200 to 300 bags of

---

[14] This system is in contrast to a system of sales on credit in which the ownership of the inputs would be transferred from the FAO to the PDs once the inputs are delivered by the FAO. While the PDs need not pay for the inputs immediately, they would be responsible to pay the FAO (principal and interest) on the entire supply irrespective of their volume of sales and unsold stocks. Obviously, the risks would be greater for the PDs under this system compared to the current system.

[15] This food trading was primarily financed through equity funds. A limited amount of short-term suppliers credit was also available. For a more complete discussion of the food trade, see Chapter VIII.

[16] The PD involved in fertilizer retailing bought fertilizer from the GPMB for D10/bag and sold it for cash at D13/bag or for D20/bag on a four months loan to about 30 to 40 farmers who had familial and tribal links with him. This PD was a large farmer and used equity funds to finance his operations.

compound fertilizer and urea were sold through each PD per season. However, the women PDs sold a smaller quantity than the male PDs.

- Among the 12 sample PDs, ten had some form of formal education, while two were illiterate. Of the ten educated PDs, five (two women, three men) were able to communicate in English. The low education level of the PDs has serious implications for their ability to assimilate the training given by the FAO and to maintain proper records of their transactions and business.

The interviews revealed that in general the PDs increased farmer access to fertilizer but the majority of them were limited by their lack of business experience and limited transport and storage facilities. The low profit margins and slow fertilizer turn-over, especially in the last two years, were reported to provide insufficient incentives and did not cover the cost of operations of the PDs.

B. Credit Flows through the Network

The flow of credit through the various agents involved in the marketing channel in the FAO network is diagramed in Figure IV-1.

a.) The Revolving Fund

The FAO established a revolving fund in 1988 through grants from the Danish Government in order to finance the importation and distribution of inputs. The Danish grants provided the seed money for the FAO to purchase fertilizer auctioned by the GOG in 1988. The FAO bought 2,000 tons of fertilizers from the auction at a low price of D5/50 Kg. and sold it through the PDN at D 70/50 kg to establish the revolving fund worth D 1.5 million. The revolving fund has been used since then to finance the importation, wholesaling and retailing operations of the FAO channel. Thus, the revolving fund functions as a source of working capital for the FAO to cover all importation and distribution costs, since it does not have any equity capital for these purposes. The revolving fund is maintained as a current account in the local Standard Chartered bank.

b.) Importation of Fertilizers

In the 1990 and 1991 trade seasons, the FAO used the two RPEs of S. Madi and Mukthara Ltd., as agents to import fertilizer. The RPEs financed their imports and delivery to provincial depots through lines of credit obtained from commercial banks in London. The FAO revolving fund was used as a 100 percent guarantee to obtain the line of credit from these offshore banks. The revolving funds were later released by the Standard Chartered to the FAO to pay the RPEs for the fertilizer imports and its transportation to provincial depots.

c.) Retailing of Inputs

At the primary retail level, the PDs and MGA receive fertilizer on credit from FAO at a 18 percent annual interest rate charged on the quantities actually sold on cash or credit to the farmers. The PDs are required to pay into the revolving fund the principal and interest charges rates due on the inputs actually sold by them. The revolving funds are also used to finance the transportation of inputs to the individual PDs and for the storage of inputs at these provincial depots.

At the retail level, it is left to the discretion of the PDs as to whether or not they will sell the inputs on cash or on credit to their final consumers. The explicit interest rate, according to FAO stipulations, at which PDs can sell on credit to farmers cannot exceed 18 percent per annum. This is the same rate that FAO charges the PDs for interest. The PDs are, however, allowed to fix the retail price of the inputs. Therefore, the PDs mark up the input prices according to the method of sale: on cash or credit. In general, the price of inputs sold on credit were marked up by an additional 2 percent over the price of inputs sold on cash. On the average, a 5 to 10 percent profit margin was reported to be realized by the PDs from cash sales, while the profits from credit sales varied based on the loan repayment performance.

d.) Input Credit through the Sample PDs

Table VI-4 indicates that there were notable differences among the men and women PDs regarding their choice of clients in terms of gender, crops grown, and method of input sale. The observations can be summarized as follows:

- Men PDs were observed to sell fertilizer, either on cash or credit, mainly to men farmers, while women PDs primarily sold fertilizer to women farmers. The crops financed by the PDs reflect their gender preferences. Women farmers were traditionally engaged in rice and vegetable growing, while men farmers mainly grew groundnuts and other cash crops.

- All men PDs extended fertilizer credit, especially to men farmers, while all women PDs sold fertilizer on credit to women farmers. One women PD extended credit to men farmers who were guaranteed by women's kafos. The loans were generally made for a period of 4 months.

- The explicit interest rate was 18 percent per annum. The PDs marked up the prices of inputs to realize profits. In general, the price of fertilizer sold on credit was marked up by about 2 percent over the cash price.

- No explicit collateral was required by the PDs for the loans made to farmers and kafos. However, collateral substitutes such as third party guarantees, group loans and familiarity were used. Women PDs usually supplied fertilizer loans to women's kafos and individual women and men farmers guaranteed by women's kafos. The men PDs were

observed to extend fertilizer loans to both kafos and individuals. The individual loans were made to their long-term customers. Two men PDs offered moneykeeping services to some of their clients and therefore were able to monitor the cash flow of some of their borrowers. One male PD tied fertilizer loans to the sale of groundnuts from the farmers.

- The loan repayment performance of the borrowers to the PDs, although not quantifiable, was reported to be better for the women than for the men PDs. The women PDs were more cautious in their borrower screening techniques. The loans were extended to only those kafos and farmers who had established their reputation through earlier transactions. The men PDs were better than women PDs in contract enforcement through legal proceedings and social sanctions. Despite all the care taken in extending loans to farmers, only two PDs, both women, were able to collect all the loans on time in 1991-92.

- All PDs reported that they have insufficient equity capital to offer a partial down payment or pay cash for the inputs provided by the FAO. Therefore, they were totally dependent on the FAO consignment system to support their operations. They expressed their concerns, however, about their dependence on the FAO and possible consequences for its withdrawal from the market. Although all the PDs have bank accounts, none were able to obtain formal loans.

- The majority of the PDs did not maintain proper records of their transactions, and lacked experience in selling inputs on credit. Their borrower screening and contract enforcement techniques were not well developed. Consequently, they suffered large repayment problems. It was reported that only four out of the 12 sample PDs would qualify to receive inputs on consignment from the FAO for the 1992-93 season because of their overdue accounts.

IV. STRENGTHS AND WEAKNESSES OF THE FAO PROGRAM AND PROPOSED CHANGES

1. Strengths

First, the FAO's efforts to incorporate established private food retailers into a network to carry out input distribution at the retailer level has been important. Although the PDs are highly subsidized by the FAO, its ability to utilize them, especially women PDs, and retain them in its marketing operations for the past four years has been noteworthy. Of late, this has increased the confidence of the private entrepreneurs and therefore there has been a growing voluntary response from them to independently enter into the agricultural input markets. For example, the recent interest shown by three Lebanese traders involved in food commodity imports to enter into the inputs market at all marketing levels has demonstrated that (i) private entrepreneurs with a temporary external risk reducing guaran-

235

tee can create the marketing confidence needed to identify and exploit trade opportunities in agricultural inputs market, and (ii) there may be scope for product complimentarity so that inputs can be efficiently accommodated with food commodities in a trader's activities.[17]

Second, the PDN through its wide national coverage has increased the timely availability of agricultural inputs and has promoted some competition in rural areas among the various sources that supply these inputs, especially through credit arrangements. The input prices offered by the PDs have been competitive and free of subsidization, although high from the farmer's perspective.

Third, the successful use of private dealers as agents to import fertilizer may facilitate the gradual transfer of FAO's responsibility over to the private sector.

Fourth, the horizontal linkages established with other fertilizer distributors, such as NGOs, governmental programs and the maize growers association, have helped achieve some economies of scale at the importation level.[18]

Fifth, it has been cost efficient to use the idle infrastructure owned by government parastatals such as the GRT, the GCU and the GPMB rather than invest in the development of new infrastructure by the PDs.

Sixth, the banking discipline made mandatory among the PDs is supposed to allow them to establish a good reputation with formal banks.

Seventh, the use of revolving funds as a guarantee to obtain access to off-shore financing for the private food importers was successful. This has indicated the importance of setting up of a guarantee fund to achieve self-sustainability once the FAO pulls out of the market.

---

[17] The interest demonstrated by private entrepreneurs has been induced by the non-interference of the Government in the inputs market for the past four years, especially during the election year of 1992.

[18] A non-linear surcharge is assessed by the foreign suppliers on the quantity of fertilizer imported (i.e., the charges decline with an increase in the quantity imported). Also, the majority of fertilizer suppliers are reluctant to supply less than 500 tons of fertilizer per shipment since it is not economical for them to produce or mix the special type of fertilizer (8-24-24 compound) demanded in The Gambia. With total fertilizer consumption less than 3000 tons and with more than four different suppliers, it is more economical to have one organization with the comparative advantage to assume the responsibility for all imports (consult Chapter VII for details).

2. Weaknesses

First, in the current program the FAO is the principal actor in fertilizer marketing and in the provision of credit associated with it. The FAO was established in The Gambia to primarily demonstrate and train farmers in modern agricultural practices to increase agricultural productivity for attaining food self-sufficiency. Therefore, while the FAO assists with creating awareness among the farmers about fertilizer use through conducting fertilizer trials, it is not expected to directly involve itself in the functioning of domestic fertilizer market as a seller nor act as a bank substitute for credit sales.

Second, although the FAO project helped establish a private retailer network, the PDN is an "artificial" creation, and the current involvement of the PDs is an "induced" phenomenon. The PDN has some weaknesses because it didn't emerge spontaneously through market forces. A voluntary response from PDs requires incentives created by profitable opportunities generated in the marketplace.

The PDs are supported by the FAO through the implicit subsidization of their operating costs. Despite the subsidization, however, the majority of the PDs have not been able to break-even and suffered losses because of low turn-over and high loan delinquency by the farmers, especially in the last two years. The low turn-over in 1991-92 was due in part to higher prices charged by the PDs compared to other input suppliers such as the GCU and government programs.[19] Loan delinquency has been due in part to poor borrower screening procedures followed by the PDs. While the repayment performance of PD loans to FAO was above 90 percent in 1988 and 1989, some informants suggest that it declined to below 50 percent in the past two years (see Appendix IV-7 for details). Loan repayment by the PDs is affected by: (i) loan repayment (supposedly) by farmer/kafo borrowers; (ii) the lack of equity by the PDs means that they may not have enough cash flow to pay FAO when they do not recover the loans made to their customers; (iii) confusion about the amounts owed and the loans calculated by the FAO; and (iv) the possibility of willful default.

Because of the recovery problem, the FAO implemented a "repayment rule" in 1991-92 to bring greater repayment discipline to the poorly performing PDs. It requires a 100 percent repayment of FAO loans (principal and interest) by the PDs to qualify for further loans. As a result, the number of PDs qualified to carry out retailing operations for the FAO declined in 1991-92. Of the 36 PDs originally included in the PDN, only 10 PDs, six women and 4 men, were qualified in 1991-92 to receive inputs on consignment.[20]

---

[19] While the GCU was able to keep its operational costs low due to economies of scale and low fixed costs, and, therefore, offered lower fertilizer prices, it has also received explicit and implicit subsidies (see Chapter III).

[20] In 1991-92, the unqualified PDs were, however, allowed to sell for cash their inventory of unsold inputs carried over from previous seasons.

Therefore, the poor loan repayment performance has reduced the number of participants in the inputs markets and hence farmer access to inputs. Furthermore, the poor loan repayment performance has led to the erosion of the revolving fund used to finance the program. Unofficial sources suggest that 50 percent of the revolving fund (which was originally about D 1.5 million) has been eroded and that the 1991-92 marketing operations were supported by the newly injected external funds of about D six million from the Women's World Bank. These issues have raised serious concerns regarding the competitiveness and sustainability of the entire system.

A. Problems with the PDN

Several factors related to design flaws are responsible for the poor performance of the PDN and they can be summarized as follows:

a.) The Choice of PDs

The PDs included in the PDN were not selected based on a rigorous criteria required to reflect capacity to effectively market inputs. While care was exercised to not include individuals who lacked previous experience in trading activities, it was implicitly assumed that input trading could be integrated with other food trading activities and that experience gained from trading in food commodities could be transferred to trading inputs. In other words, the design assumed product complimentarity and homogenous marketing technology for different commodities. The majority of the PDs were previously engaged in petty trading of food commodities that are characterized by inelastic and continuous demand, quick turn-over and small investments in infrastructure facilities. Agricultural inputs, on the other hand, involve elastic demand, slow turn-over and have a high correlation with production risks compared to food commodities. These differences were not adequately considered in the design.[21]

Furthermore, even if the experience gained by the PDs from food trade could be applied to the input trade, they lack adequate infrastructure facilities required for large scale input trading. The majority of the PDs do not possess adequate trucks or storage capacity to handle the inventory of inputs that are seasonal in nature. The result was that the majority of the PDs maintain diverse professional interests that are not complimentary with their input marketing activities. Therefore, the majority of PDs tend to operate on a part-time basis leading to few economies of scope due to product complimentarity.

It is interesting to note, however, that the FAO was not enthusiastic regarding the inclusion of established groundnut traders in its PDN. There were 42 registered groundnut PEs (GPEs) engaged in groundnut buying operations for the GPMB in 1988. These GPEs were experienced in large-scale commodity trading and possessed adequate physical facilities

[21] See Chapters VII and VIII for a detailed discussion of the characteristics of the fertilizer trade that distinguish it from food commodities.

for their trading activities. Furthermore, they were linked to formal banks to finance their trading activities. However, the FAO feared that these established GPEs would tie their input operations to their output operations which would lead them to ration (i) small farmers who lack a large groundnut marketable surplus, and (ii) non-groundnut farmers, especially women. Therefore, the FAO selected new PDs to include in the PDN. Perhaps, a balance between established GPEs and food PDs would have improved the viability of the FAO program. The established GPEs might have used their reputations established with the formal banks through previous groundnut trading to acquire credit to finance their input trading and would not have depended exclusively on the FAO for financing the inputs received through the consignment system. Also, since groundnut trading is subject to production and price risks, these GPEs are equipped to deal with problems inherent to agricultural trading. Furthermore, the GPEs can link input sales to farmers with output marketing (as is frequent in Asia), thereby improving their loan repayment performance and the long-run sustainability of the FAO program.

b.) Limited Liability for the PDs

The PDs operate on 100 percent financing from FAO and are not required to offer any collateral or down payment for the inputs received on consignment. Therefore, the PDs have less of a stake in the marketing operations and they consider themselves as mere conduits to distribute inputs for FAO. The lack of PD equity capital in their marketing operations and the lack of limited penalties in the early stages of operations for non-performing PDs has led to inadequate borrower screening procedures by the PDs as they offer inputs on credit to their customers resulting in a risky loan portfolio and poor loan recovery.

c.) Rudimentary Financial Technology

The majority of the PDs were previously involved in food retailing operations that requires working with only small and short-term loans (often less than one month). Therefore, they did not have the appropriate financial technology required for making input supply loans that are large, are six to nine months in term, and involve substantial lending risks.[22] The lending risks can be mitigated in part through innovative and carefully designed contract terms and conditions. Whereas the PDs maintain market level interest rates, the other contract terms and conditions are weak and provide incentives for default by farmers. While some PDs are creative in using third party guarantees offered by kafos as collateral substitutes, the majority of the inputs are sold on credit to farmers free of collateral and with soft penalties for default. In the absence of land as a tangible collateral, the use of innovative collateral substitutes such as interlinked contracts (eg., input-credit-product linkages, input-credit-labor linkages) could enhance efficiency in input marketing through improved loan recovery performance by farmers. However, there is no evidence that the PDs use such interlinked contracts. Perhaps their lack of equity capital and the

[22] Consult Chapter VII for further details.

239

limited external funds provided by the FAO to finance their operations prevent the PD's from offering output linked input loans. Therefore, the PDs may need to obtain other external sources of finance for their output marketing if they are to offer interlinked contracts, but these sources may be expensive or inaccessible to all PDs.

d.) Poor Record-Keeping Procedures

Since most PDs were previously engaged in small-scale food retailing that involved quick turn-over and used mostly equity capital, they are not rigorous in maintaining accurate records about their business transactions. The relatively more complex marketing of inputs procedures involves working with a larger clientele, loans, inventories and external financing sources and requires more sophisticated accounting. The PDs were, however, not trained in accurate record-keeping procedures. Therefore, they were unable to understand complex operational procedures and hence were unable to account for all their transactions. For instance, while the in-kind loans from the FAO resemble the terms and conditions of sales on consignment, the PDs often mistook them for sales on credit. Therefore, there is confusion among the PDs about the interest rates charged by the FAO on (i) the total quantity of inputs supplied to them, (ii) the actual quantity of inputs sold to farmers, and (iii) unsold quantities held at their stores. Therefore, they have been unable to account for their liabilities to the FAO and are unaware of their eligibility for the program in the next season. This uncertainty reduces the incentives for the PDs to continue in the FAO program. The system needs simpler operating procedures.

Third, the availability of the revolving fund to finance fertilizer importation and distribution has led the private entrepreneurs to continually depend on external funds. With the drying up of the revolving fund due to inflationary losses and low loan repayment, alternative mechanisms are needed for program sustainability. Currently, the alternative financial sources of domestic banks and informal markets to finance fertilizer marketing are either absent or expensive. Furthermore, the PDs are not enthusiastic about exploring alternative financial sources which might involve offshore loans or trader finance.

Fourth, the current program does not provide adequate incentives to PDs who are interested in establishing their own retail network to distribute inputs. The PDs interested in wholesaling are required to use the PDN established by the FAO. If PDs are to set up independent operations, they need to establish their own network of agents. To do so, they can either select efficient PDs from the current PDN and/or select entirely new agents to serve as retailers. They also need to develop alternative sources of finance and devise innovative financial contracts to facilitate input marketing activities.

Fifth, the program provides few incentives for the PDs to establish horizontal linkages among themselves. Weak linkages have been stimulated by the FAO to exchange information among the PDs about lessons learned in marketing inputs. But the PDA is inactive and does not serve the interests of the PDs well.

Sixth, while the 14 Technical Sales Advisors (TSA) appointed by the PDA and paid through the FAO revolving fund provide technical advice about fertilizer use to PDs and their clientele, they have weak links with other government agricultural extension programs. Therefore, farmers may have some doubts about the validity of their technical recommendations.

3. Changes Being Proposed for the FAO Program

The FAO is in the process of withdrawing as an inputs marketing channel. We understand this withdrawal will be completed by 1995. Before withdrawing from the market, however, it has been involved in restructuring the current program based on the lessons learned in previous years. Some of the proposed changes are outlined here.

A. Strengthening the PDA

The PDA is intended to be strengthened to (i) provide training to PDs, and (ii) to disseminate market information. The strengthened PDA is expected to take the responsibility of coordinator of the PDs. Plans are being made to implement the proposal.

B. Expansion of the PDN

The lessons learned from the poor performance of some retailers has led to restructuring of the PDN. Plans are made to (i) eliminate non-performing PDs, (ii) include new PDs to replace the eliminated PDs, and (iii) expand the PDN. The existing PDs are required to clear all their arrears by the end of 1992; if they fail to do so they will be eliminated from the PDN. Strict criteria have been established to select PDs to include in the new and expanded PDN (see Appendix IV-8 for the list of criteria for private dealers). The expanded PDN is proposed to include 46 PDs of which at least 40 percent will be women. The basic principle behind the expansion is that no farmer should travel more than 15 kilometers to purchase agricultural inputs.

C. Uniform Accounting Procedures

The accounting procedures are proposed to be streamlined and the PDs will be required to maintain proper records.

D. Establish a Guarantee Fund

The revolving fund is proposed to be converted into a guarantee fund (see Appendix IV-9 for guidelines on the guarantee fund). The guarantee fund is proposed to be established as a savings deposit at a local bank to provide overdraft facilities to PDs at the retail level. The FAO/AIO will be one of the parties included in the Guarantee Fund Board responsible for selecting and monitoring the beneficiaries.

E. Encourage the NGOs to provide input credit

The NGOs are being requested to help in the formation of village banks that can provide short-term loans to farmers to purchase agricultural inputs.

4. Integration of the FAO Program with Other Institutions

While the proposed changes in the current FAO program attempt to strengthen and streamline the PDN activities for a self-sustaining program, several issues about its integration with other institutions are left unanswered. This issue is important because of FAO's proposed withdrawal from the market and the responsibility of supplier of inputs will be turned over to local agents.

A. Integration into the Department of Agriculture (DA)

The proposed changes in the current FAO program obviously do not address the fundamental issue of naming the future coordinating agent in the event of its withdrawal from the market. While the proposed changes implicitly indicate that the Agricultural Inputs Office (AIO) of the Department of Agriculture (DA) will function as principal coordinator and monitor of future supplies of inputs through the PDN, it is not clear if it is committed to or even has the capability to carry out the revised FAO program. The fact that the PDs in the field recognize the program as being FAO's and not the AIO/DA and the fact that the program hired its own TSAs rather than using the agricultural extension staff of the DA indicates that the current program is heavily dependent on the FAO for its implementation and involves little commitment from the DA. This suggests weak integration of the FAO program into the DA, and the DA's commitment to continue the project is uncertain. The proposed changes in the FAO program do not address this issue.

B. Integration with WID

The involvement of WID with the FAO program through its request to train and place women PDs in the field and its contribution to the revolving fund for that purpose raises questions about the possible integration of the new WID retailers (with future coordinating agent for the FAO). It is not clear if the women PDs trained for the WID will be part of the PDN and will be accountable to the future coordinating agent or will function independently from the PDN. The proposed changes do not address this issue either.

V. CONCLUSIONS AND RECOMMENDATIONS

This analysis has documented the extensive role that the FAO has played in developing the fertilizer sector. Several strengths and weaknesses of the current system have been identified and some of the proposed changes have been reviewed. Apparently, the FAO project that has supported this work will end in 1995 as part of the privatization process for the fertilizer sector. If that happens, it is important to consider the policy options that may exist for the government. This section summarizes our analysis of two scenarios. Scenario one represents a rapid shift to a completely privatized sector (this might be referred to as the "cold turkey" scenario). The second scenario represents more of a gradual reduction in the intensive role that the FAO/AIO has played, but assumes that the AIO will continue some level of support to the private sector agents involved in the sector. The selection of which of these or other scenarios to pursue depends on governmental decisions about: 1) how much of the fertilizer trade it expects will be entirely left up to the private sector, 2) what capability the GCU has and/or will develop in supplying inputs to farmers, and 3) the investment it will make in supporting public sector involvement in some aspect of the fertilizer sector. The nature and extent of future donor involvement, especially FAO, will undoubtedly shape these decisions.

1. Scenario One

The objective of scenario one is to get the FAO/AIO out of fertilizer importation and distribution as soon as possible, and attempt to accelerate full privatization of the sector. No assumptions are made about the nature of the primary agents that will evolve in the sector. They could be cooperative; they could be private. It only assumes that the governmental agencies do not have a comparative advantage in the fertilizer trade. There are three primary components to this scenario.

A. Guarantee Fund

The current balance of the revolving fund would be converted into a Guarantee Fund (as proposed in Appendix IV-9 but with a different operating approach). The Fund will be located in and managed by any local commercial bank. Strong efforts will be made to collect the balances due by the PDs. However, this may not be very successful if the PDs learn that there is no assurance that they will get new fertilizer stocks if under this scenario they pay their current obligations. Therefore, the government and/or the donors should review the possibility of augmenting the size of the Fund if, as reported, the revolving fund balance is small. The donors might want to support a project to absorb a specific portion of the potential losses of the guarantee fund.

243

The Fund would be used by the domestic bank to guarantee loans made to any agent (GCU, PDs, private groundnut traders, NGOs) that operates in the fertilizer sector: importer, wholesaler, retailer. Any commercial bank in The Gambia that agrees to the terms and conditions of the Fund could receive guarantees for the loans made. The objective of the Fund would be to accelerate the learning process of the domestic banks by reducing their risk of lending to these borrowers. The expectation is that because of the guarantees banks will use their existing resources (discussed in Chapter I) to make some fertilizer loans that otherwise they would not make because of their risk perceptions. The guarantee should also encourage banks to charge a lower risk premium in their loan rates for the fertilizer loans made.

Specific terms and conditions would need to be established for use of the Fund, including the percentage of guarantee cover, procedures to access the guarantee fund, the standards that guaranteed loans must meet, and a fee structure designed to make the Fund self-sufficient. An Advisory Committee for the Fund could be created including representatives of the banks, traders, AIO, and donors, that provided funds and shared the risk.

Farm loans could be guaranteed but, because of the limited bank branch network in the country, it is not expected that many farmers would incur the transaction costs of trying to get a loan. Rather it is expected that by lending for the working capital requirements of agents in the marketing channel this liquidity will pass down the channel so that retailers will be encouraged to sell fertilizer to farmers on credit. The retailers are located close enough to the farmers so they have a better chance than banks to successfully screen farmers and determine creditworthiness. Obviously, retailers will have to learn to do a better job of lending than has been done by many of the PDs to date.

B. PD Network

This scenario does not contemplate an ongoing role by AIO in developing and maintaining the PDs and the PDA, because there is no certainty that any of the agents (private dealers or cooperatives) that will expand into the fertilizer trade will choose to use any of the PDs to form part of their retail network. The fertilizer importers and wholesalers will each need to develop their own markets. They may decide to do business with some of the better PDs or start from scratch with their own agents. They may decide to accept the risk of continuing the consignment approach, or reduce their risks by choosing to sell fertilizer on credit only to those dealers they determine are most creditworthy.

Since this scenario assumes that the AIO will not actually handle input stocks in the future, the current fertilizer inventory should be auctioned off along with any equipment that might have been acquired for this program. The bookkeeping accounts will need to be evaluated for each PD, an attempt will need to be made to collect delinquent payments, and a determination made to write-off uncollectible debts. Any substantial inventories with PDs should either be paid for or returned to AIO depots for sale.

C. Future Fertilizer Development Programs

There are several activities that the Department of Agriculture should continue to implement and some of them could be logically supported by the FAO and/or other donors. First, strong programs are needed to acquire and test seed varieties, measure fertilizer yield response, and evaluate optimum rates and types of fertilizer application. This information should be disseminated to farmers to help them with their fertilizer use. It should also be disseminated to the dealers so that they can augment the extension function by transmitting information to their farmer customers. Second, it may be useful to implement business development programs for private dealers in the fertilizer sectors. These programs could disseminate information about the FAO/AIO experience in importing and distributing fertilizer. They could also teach the basic rudiments of business management (accounting, finance, etc.) to small scale firms.

There are several implications with this scenario. There may be temporary disruptions in fertilizer supplies as the current distribution system is replaced by the new privatized one. Fertilizer prices and interest rates for fertilizer loans will rise as the remaining subsidies are eliminated. Some of the current PDs will no longer be involved in fertilizer retailing. The losses that have occurred in operating the current program, which are currently difficult to observe, will become transparent when the size of the remaining revolving fund is known.

2. Scenario Two

The objective of this scenario is to privatize parts of the fertilizer sector but leave a more active role for the AIO.

A. Guarantee Fund

The guarantee fund is created in the same way as proposed in scenario one but there may be a possibility for some remnants of the PDN to receive guaranteed loans in addition to the other agents already identified.

B. PD Network

This part of this scenario is most problematic. The fundamental issue is whether or not the Department of Agricultural Services will decide to more fully integrate the AIO into its operations and provide it with adequate staff and resources once the FAO project ends. As described above, the AIO currently seems to be largely a donor-funded appendage that is not fully integrated into the Department. The Department must also decide if it wants to support the PDN as currently designed, in which fertilizer is supplied on consignment, or if it wants to convert the PDs into truly private dealers who will buy and sell inputs

245

according to their market opportunities. The former implies that the AIO would continue to bear the risk of acquiring and distributing inputs. The latter alternative would transfer much of this risk to the private sector. If it chooses the latter alternative, the AIO will have to maintain a capacity to store and transport inputs and distribute them to a strengthened PDN. The PDs, however, would be developed to operate as viable, independent retailers that could acquire inputs from any source. Presumably, the AIO would acquire inputs through traditional lender operations. Resources would need to be acquired to pay for the fertilizer stocks and the operational costs of the office, either through budget allocations or donor funds. The AIO would need to develop a capacity to undertake all the tasks now done by the FAO personnel.

C. Future Fertilizer Development Programs

These would be conducted as discussed in scenario one. Regardless of which scenario is chosen, the importation and distribution system for fertilizer will have to undergo substantial changes. Privatization implies that the private sector will have to play a more significant role, and will have to be renumerated for the resources used and the risks faced. This implies higher fertilizer prices in the future. As will be argued in Chapters VII and VIII, there are some reasons for optimism about the future role of the private sector. There are, however, serious problems that must be addressed before a completely self-sufficient privatized system will emerge. Furthermore, it is possible in the long-run that the GCU will have the comparative advantage to supply agricultural inputs to farmers for the reasons outlined in Chapter III.

REFERENCES

FAO, "Private Dealers Network," Cape Mary: Agricultural Inputs Office, 1991.

FAO, "Report of the Consultancy on Fertilizer Procurement, Distribution Strategies and Pricing Policies in The Gambia," Rome: FAO, 1992.

Zeller, Manfred, Ken John, and Ebrahim Kamara, " Rural Financial Markets and Their Food Security Linkages in The Gambia: Current State and Policy Implications," Washington, D.C., IFPRI, 1991.

Figure IV-1
Financial Services by the FAO to Various Agents Involved in Fertilizer Marketing in The Gambia

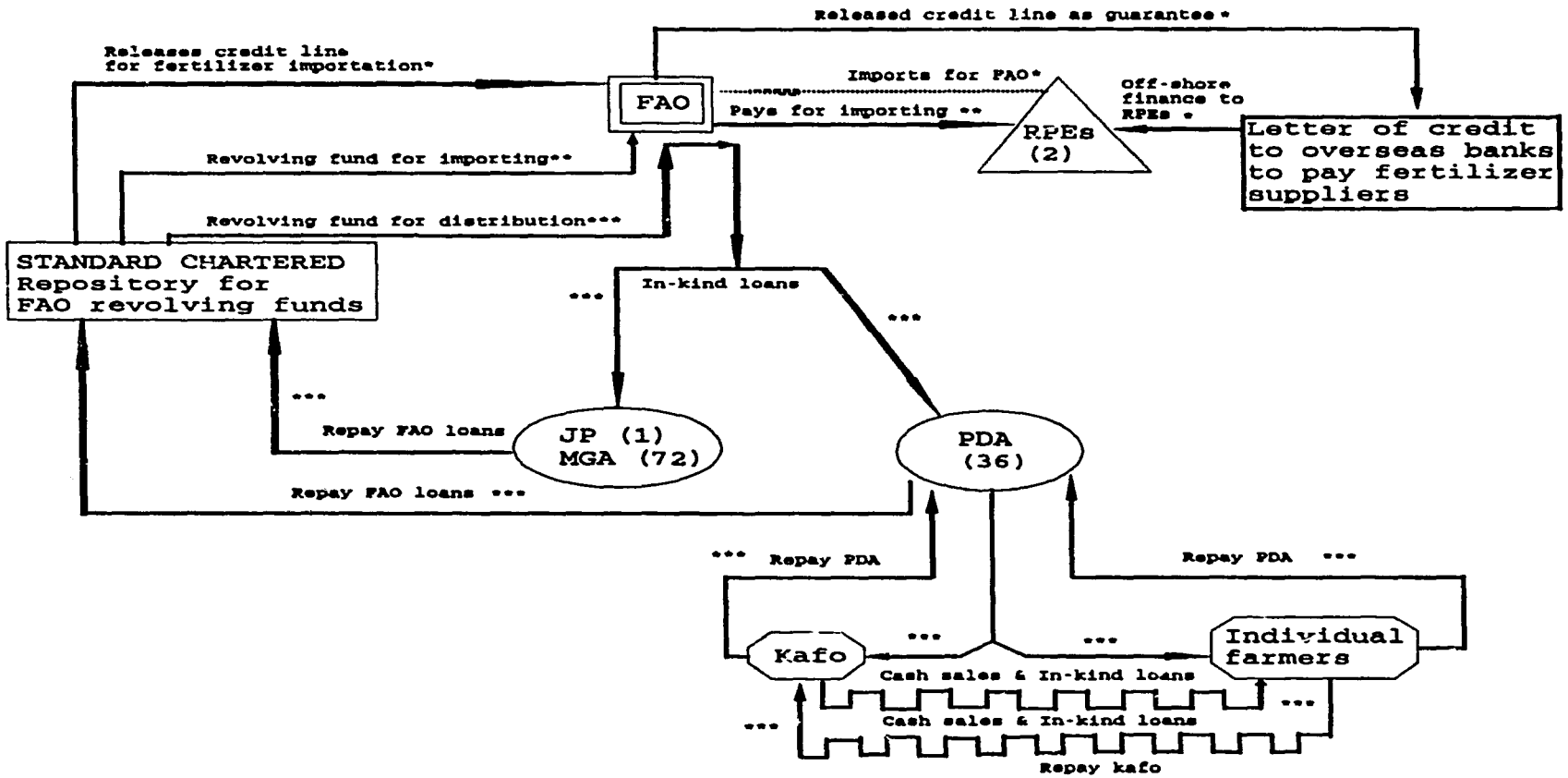

Notes:

1. Figures in parenthesis represent the number of participants through the respective program/association.
2. RPEs: Registered Private Entrepreneurs; JP: Jahally-Pacharr Rice Development Project; MGA: Maize Growers Association; PDA: Private Dealers Association; PD: Private Dealers
3. ▵ = Importer; o = Retailers; ▭ = Consumers; ∿ = Represents instances where fertilizers are distributed through kafos to individual farmers (intermediated by kafos).
4. * : Importation through RPEs; ** : FAO-RPE links in importation; *** : Distribution through FAO network.

Table IV-1 Sample of Private Dealers (Affiliated with FAO) Interviewed for the Study.

No.	Division	Male Participants: Name of Village	Female Participants: Name of Village
	(1)	(2)	(3)
1	Western Division	Brikama	Sukuta, Faraba-Banta
2	Lower River Division	Burong	None
3	North Bank Division	Munyagen	Farrafenni, Bakindik
4a.	MaCarthy Island Division (South)	Bansang, Brikama-Ba	Madina-Umfally
4b.	MaCarthy Island Division (North)	None	None
5	Upper River Division	Basse, Fatoto	None
Total		7	5

Table IV-2 Quantity of Fertilizer Imported through the FAO Channel, 1989-1991.

Items	Importers: FAO	Importers: Private Entrepreneurs	Total[1]
	(1)	(2)	(3)
		(In Tons)	
		1989-90[2]	
Urea	610	0	610
NPK (8-26-26)	1550	0	1550
Total	2160	0	2160
	(100)	(0)	(100)
		1990-91[3]	
Urea	500	500	1000
NPK			
a. 8-24-24	1000	0	1165
b. 10-20-20	165	0	
Total	1665	500	2165
	(77)	(33)	(100)
		1991-92[4]	
Urea	0	0	0
NPK (8-24-24)	0	1000	1000
Total	0	1000	1000
	(0)	(100)	(100)

Source: FAO.

1 Percentage of total is given in parenthesis.

2 Imported from Italy through Italian grants.

3 Imported from Poland except for 10-20-20 NPK that was imported as grants from France. The PE used was S. Madi Enterprise.

4 Imported from Senegal. The PE used was Mukthara Enterprise.

Table IV-3 Value of Inputs Distributed through the PDA Under the FAO Channel by Type of Agent, 1989-1991.

Items	Fertilizer (All types)	Seeds (Food & vegetable)	Pesticides	Others (Implements)	Total
		(In '000 Dalasis)			
	(1)	(2)	(3)	(4)	(5)
		1989-90			
PD's	1118.6	53.3	31.6	20.4	1223.8
MGA	1016.5	0	0	0	1016.5
BD	122.3	73.9	42.8	37.9	276.9
		1990-91			
PD's	1734.2	272.9	167.2	189.7	2363.9
MGA	939.2	0	37.8	3.1	979.9
BD	493.6	170.6	34.1	46.9	745.1
		1991-92			
PD's	870.4	151.1	56.0	196.4	1273.9
MGA	280.0	42.0	0	0	322.0
BD	181.9	25.1	30.9	135.5	373.4

Source: FAO.

Table IV-4 Sample Private Dealers: Crops Financed, Modes of Sale and Client Type by Gender.

Item	Men PDs		Women PDs	
	Men Farmers	Women Farmers	Men Farmers	Women Farmers
	(1)	(2)	(3)	(4)
(1) Crops financed	Groundnut, Cotton, Rice	Groundnut, Rice	Groundnut	Vegetables, Rice
(2) Modes of Fertilizer Sale		(No. of PDs under each category)		
a. Cash	0	1	1	0
b. Cash & credit	1	3	1	3
c. Credit	6	1	1	2
d. No sale	0	2	2	0
(3) Client type				
a. Kafos	2	3	1	4
b. Individuals	5	2	2	0
c. Kafo & individuals	0	0	0	1

Source: OSU survey.

252

Appendix IV-1
Objectives of the Fertilizer Use, Promotion, Distribution and Credit Assistance Project(GCPF/GAM/014/DEN)[1]

Short-term Objectives

To increase production of crops like rice, sorghum, millets, maize, vegetables, groundnut and cotton by:

1. conducting fertilizer demonstration trials in farmers' fields to show correct use of fertilizer and to affirm recommended doses of fertilizers,

2. developing systematic training of agricultural extension workers, and

3. providing support for fertilizer marketing through technical and financial assistance.

Long-term Objectives

1. to assist the GOG in increasing agricultural productivity, especially of small farmers, to attain self-sufficiency in food and increase revenue through increase in production of cash crops;

2. to facilitate wider use of improved farm technology through an adequately equipped and trained extension service, and;

3. to develop effective extension techniques, train staff, formulate long-term policies for the use of farm inputs, with special reference to fertilizers.

---

[1] Source: FAO.

Appendix IV-2
List of Studies on the FAO in The Gambia[2]

1. Zeller, Manfred, Ken John, and Ebrahim Kamara, " Rural Financial Markets and Their Food Security Linkages in The Gambia: Current State and Policy Implications," Washington, D.C., IFPRI, 1991.

2. Zeller, M., J. Von Braun, K. John, and D. Puetz, "Sources and Terms of Credit Faced by the Rural Poor in The Gambia: Policy Implications," Washington, D.C., IFPRI, 1991.

3. FAO, "Report of the Consultancy on Fertilizer Procurement, Distribution Strategies and Pricing Policies in The Gambia," Rome: FAO, 1992.

4. FAO, "Private Dealers Network," Cape Mary: Agricultural Inputs Office, 1991.

5. Von Braun, J., Kenneth John, S. Kinteh, and D. Puetz, "Structural Adjustment, Agriculture and Nutrition: Policy Options in The Gambia," Washington, D.C., IFPRI Working Paper No. 4, 1990.

6. FAO, "Promoting Competition in Fertilizer Marketing in Africa," Rome: FAO, 1987.

[2] Source: FAO.

Appendix IV-3
Block Demonstration Concept[3]

Introduction

This paper focuses on the operational modalities of the block demonstration scheme for crop production in selected areas of The Gambia. It is based essentially on the experience gained so far from the block demonstrations, carried out through FAO Fertilizer Project with the cooperation of the Department of Agriculture from 1987-1990.

The effect of an intensive trial, demonstration and training (T & V) programme on farmers' fields during the first and second phase of the FAO Fertilizer Programme in The Gambia, has created an increased demand both for fertilizer and other related inputs. For this reason, and in line with the Government's policy to intensify and expand crop production, the project has implemented a Block Demonstration Programme with a view to bring farmers to a sustained application of technical and economic recommendations for all crops under varying local soils and agro-climatic conditions.

Major emphasis will be given here to the operational arrangements and services related to the execution of the block demonstrations which are considered as the centre points of the formation of farmers' groups and serve also as pilot undertakings for a sound education for the entry of their members into a credit system.

A number of ideas have developed since the start in 1987 and a number of adjustments have been necessary over the years and might still be necessary for the years to come, in order to make the programme suitable and sustainable.

The block demonstrations can be divided in two types:

The Dry season block demonstration focuses almost entirely on womens' vegetable production, where the group of women running a block demonstration might range as high as the number of members. In practice a whole vegetable garden in participating with the size of the gardens ranging ½ - 5 Ha.

The wet season block demonstration focuses on upland crops and the participants have so far mainly been male farmers with groups of 5-20 members cultivating 5-30 ha per block.

---

[3] Source?

Objective and Concept

The objective is to demonstrate on a larger commercial scale, the beneficial effects of efficient and economic use of fertilizer and related inputs, in combination with other improved cultural practices.

This is done without creating any new institutions but rather by strengthening the input distribution and marketing services set up by the Fertilizer Project, which in return has the block demonstration as a sales promotion tool.

Site Identification and Selection of Farmers Groups

Prior to the lay-out of a block demonstration farm a rough survey of a suitable location is done and meetings held with the field extension workers and the key farmer before selecting a uniform five to thirty hectares block demonstration farm.

Within each block demonstration farmers are organized into a cohesive group of 5 to 20 members according to the size of farm holding prevailing in the area.

Willingness of well-motivated farmers in joint groups is basis criteria used for the selection. The group could be a dabada or compound comprising 5 - 20 members with a farm size of 5 - 30 hectares. The individual fields of each participant on which all recommended practices are applied and all inputs used accordingly to recommendations, should be adjacent thus forming a block.

Extension Approach

The block demonstration programme is part of the T & V system and thus managed by the extension staff in collaboration with the technical sales advisers attached to the private dealers network.

The success of the demonstration scheme depends largely upon the degree of follow-up by the field extension agents under the District Extension Centres. Through the Divisional Agricultural Coordinators and the extension centres farmer training, intensive supervision and extension programmes is carried out to ensure timely and right use of inputs and technologies.

Input Supply

Once the selection and forming of block farms is made, timely and adequate provision of fertilizer and other recommended inputs is planned. The required inputs are worked out by the VEW and the technical sales advisers according to the projects recommendations and submitted to the Agricultural Input Office for approval/recommendation.

After approval the nearest retail outlet is approached for supply of the required inputs and a contract is signed between the president of the farmers group and the supplier.

Credit Agreement

The above inputs, all given out in kind, are not on an individual basis, but are considered as a group credit to the members involving group responsibility for repayment.

Upon delivery of inputs and as a kind of guarantee for repayment, agreement contract is submitted to each farmer's group. Such credit agreement includes basically:

- Farmers' Group Leader's name and address
- Location and number of participants
- No. of hectares including specification of crops
- Type of inputs received and principal value of the credit.
- Total value of credit, including interest
- Date of credit disbursement
- Date of repayment.

Each contract is to be signed by two members of the group, normally the group leader contact farmer and the secretary or/and treasurer. Usually the group leader takes responsibility for storing and distributing the inputs to the individual members, based upon their landholding within the block farm.

After harvest and sale of produce, the group leader and treasurer collect from each member the individual credit value plus interest and repay the supplier.

This simple procedure has the advantage of reducing considerably all administration, overhead and supervision costs.

Suppliers

Farm inputs for the block demonstration programme can be obtained from any retail outlet on terms specified by the particular outlet delivering the inputs. Presently the private individual dealers and the block villages are providing the inputs for the programme, as they are financed by the project's Revolving Fund. As credit is provided on the dealers own discretion, implementation is subject to a final agreement between the group of farmers and the supplier.

The concept is in line with the government policy of privatizing the farm input sector and making it sustainable.

Data Collection

Data collection is an integral part of block demonstration activities. Data are collected on yields and inputs supplies to the blocks. Yields are recorded, because it is from the yield that the loan can be paid.

Yield data are collected by way of random sampling from a few representative blocks, in accordance to National Agricultural Sample Survey (NASS) procedures. Staff involved are provided with a written guide on procedures.

Data on inputs given out on credit to blocks from private dealers are deducted from contract forms signed by both parties. Values and interest on such inputs are clearly inscribed on these form.

After each season, AIO will organize a workshop, in order to analyze the results from the block demonstration programme. Result and recommendations emanating from such workshops are deployed in adjusting and improving the programme.

Appendix IV-4
Technical Sales Adviser
Terms of reference[4]

Under the general guidance and supervision of the Agricultural Input Office under the Department of Agricultural Services, and under direct supervision of the committee of the Private Dealers Association, the Technical Sales Adviser will carry out the following duties:

i) Assist, advise and train the private dealers participating in the private dealers network in distribution of agricultural inputs in all aspects of marketing of farm inputs, and more particularly, assessment of input requirements, product knowledge, timely ordering, storage, sales promotion and record keeping.

ii) Liaise with the Extension Service in the area in all aspects related to use of agricultural inputs.

iii) Assist and liaise with the Extension Service in organizing and evaluating the Block-demonstration Programme or other credit programmes.

iv) Carry out all other duties related to the activities of AIO and the private dealer network as may be required.

[4] Source: FAO.

Appendix IV-5
Terms of Trade
Agricultural Input Office
(DAS/FAO FP)[5]

1. As from 1 April 1990 the interest rate is 1.5% per month but month of delivery is free of interest charges.

2. Interest is debited last day of every month on basis of outstanding las day of the previous month.

3. Stocktaking on Wet Seasons (1/4 - 30/9) is carried out from 30/9 after closing hours to 7/10 by the TSA's. Deadline for payment of the Wet Season supply is 28/2 the following year.

4. Stocktaking on Dry Seasons (1/10 - 31/3) is carried out from 31/3 after closing hours to 7/4 by the TSA's. Deadline for payment of the Dry Season supply is 31/5 the same year.

5. Payment due (28/2 and 31/5) is calculated as follows: Opening stock + supplies - closing stock = payment due.

6. Any stock at any time is the property of AIO and AIO might transfer any stock at any time from one dealer to another.

7. The dealer will receive a statement of account minimum twice a year, one for the Wet Season transactions and one for the Dry Season transactions.

8. Last day of each month the dealer must transfer the wholesale value of any cash sales during the month from her or his personal account to the AIO Revolving Fund.

9. Any credit to farmers is at the dealer's own discretion, risk and responsibility.

10. Any guidelines on retail prices from AIO are only guidelines and dealers are not obliged to follow them.

11. Legal action will be take against any retailer failing to settle his outstanding with AIO at above given time.

---

[5] Source: Agricultural Input Office (AIO), 1990.

Appendix Table IV-6 Previous Experience of Sample Private Dealers by Gender and Type of Activities.

Item	Private Dealers		
	Men	Women	Total[c]
	(1)	(2)	(3)
		(No. of PDs in each category)	
1. Food retailers[1]	3	3	6 (50)
2. Farming and non-farming activities[2]	2	1	3 (25)
3. Farming	1	1	2 (16)
4. Fertilizer retailer	1	0	1 (9)
5. Total sample	7	5	12 (100)

Source: OSU survey.
1 Engaged in rice, sugar, cooking oil retailing.
2 Non-farm activities included jeep driving, sale of petrol and groundnuts buying activities.
3 Figures in parenthesis gives percentages to the total.

Appendix Table IV-7 Number of Retailers in the PDN and Their Repayment Performance, 1989-90.

Agents[1]	Number of Retailers		% Repayment Performance	
	1989-90	1990-91	1989-90	1990-91
	(1)	(2)	(3)	(4)
1. PDs	36	34	97	64
2. MGA	77	33	74	36
3. BD	2	3	95	39
Total	115	70	87	53

Source: FAO, 1991.
1 PDs: Private dealers; MGA: Maize Growers Associations; BD: Block Development Villages.

261

Appendix VI-8
Private Dealer Criteria for Retailers[6]

All private, individual retailers financed by the Revolving Fund of Agricultural Input Office (AIO) shall be selected and approved by AIO, in accordance with a set of criteria:

1. GEOGRAPHICAL LOCATION:

   In cooperation with Private Dealers Association and the Extension system of Department of Agricultural Services (DAS), AIO selects areas with expected sufficient demand for agricultural inputs, enabling a private retailer to make a reasonable living of the business.

2. STORE FACILITIES:

   A private retailer must have adequate store and shop facilities. The shop should be located where it is easily attracted by potential customers. Safe guarding, theft, maintenance and any expenses or losses are entirely at the private retailers own cost and responsibility.

3. BUSINESS EXPERIENCE:

   A private retailer must have some basic knowledge and experience on business matters, such as: risk involved when providing credit to farmers, costs involved when calculated margins, interest, demand if prices increase/decrease, sales and margin necessary enabling the private retailer to make a reasonable living of the business. At any times the private retailer must be aware, when selling a commodity, which money belongs to him/her (margin), and which money is due payment to the Revolving Fund of AIO.

4. PERSONAL BANK ACCOUNT:

   A private retailer must have (or open) a personal Bank Account with a commercial Bank. No cash or cheque payment to any TSA or staff of AIO will be accepted. The private retailer must pay for inputs provided, by depositing receipts into their own accounts, which are then transferred by Banker's order into the Revolving Fund of AIO.

---

[6] Source: FAO.

262

5. FINANCIAL CAPACITY:

A private retailer must have some financial means to meet expenses such as costs of transport of fertilizer from the nearest GPMB-Depot to his/her shop, major repairs of his/her shop or store, deposit to open a personal account and any other expenses vital for maintaining his/her business.

Appendix IV-9
Concept of Guidelines for Guarantee Funds: The FAO Design[7]

The credit line to Private Dealers (in kind) is presently financed by the AIO Revolving Fund.

In order to bring the financing of the Private Dealers (PD) into normal commercial channels, the AIO has developed an alternative to the Revolving Fund. The model is named the Guarantee Fund.

The concept of the Guarantee Fund:

1. The money from the Revolving Fund will no longer be revolved but will be deposited in a commercial bank account.

2. These funds are then the guarantee against overdraft facilities for the PD's.

3. The limit for overdraft for each individual PD is based on turnover and performance from previous years.

4. If new dealers are appointed, they will only be given very limited overdraft facilities for the first year to test their performance.

5. The total overdraft from all the dealers must not exceed the total value of the Guarantee Fund.

6. A Board is formed, in charge of the Guarantee Fund. The major task of this Board is maintain the effective value of the Fund. The Board will approve the limit for overdraft for each individual PD twice a year (Wet Season and Dry Season supply to the PD's).

7. The Board is: Agricultural Input Office (AIO), Private Dealers Association (PDA) and a representative from the commercial bank where the Guarantee Fund is established. A lawyer will be attached as advisor to the Board on all legal matters.

8. The AIO and the Technical Sales Advisers (TSA's) attached to the PDA will assist the PD's in estimating the demand for agricultural inputs within the PD's area of operation. This demand forecast will take place twice a year (Wet Season and Dry

---

[7] Source: FAO.

Season). Based on the forecast a request is forwarded to the Guarantee Fund Board. The Board will estimate the value of the inputs requested and will set the limit for overdraft accordingly.

9. The AIO will ask potential wholesalers for quotations on the requested inputs by PDA. The quotation must be within the total approved limits for the PDA. The Board will evaluate the quotations and approve the wholesaler who brings the best offer (prices, quality, timeliness, etc.)

10. All quotations must be based on delivery provincial depots enabling the PD's to link up with the wholesaler. The PD's will transport the goods from the depots to their stores at their own cost. The wholesaler will receive a distribution list from AIO on the quantities to be delivered at the various depots (which is based on the PD's locations, request for inputs and approved overdraft).

11. The wholesaler must finance the import and the in-country distribution to the various depots.

12. When the goods have been received in all the depots in accordance with the agreed terms, the bank will pay the wholesaler. In each depot a TSA will be in charge, receiving the goods and releasing it to PD's according to the approved quantity. The bank will be informed by AIO on the total value of goods supplied to each dealer and the ban will debit each individual account.

EXAMPLE:

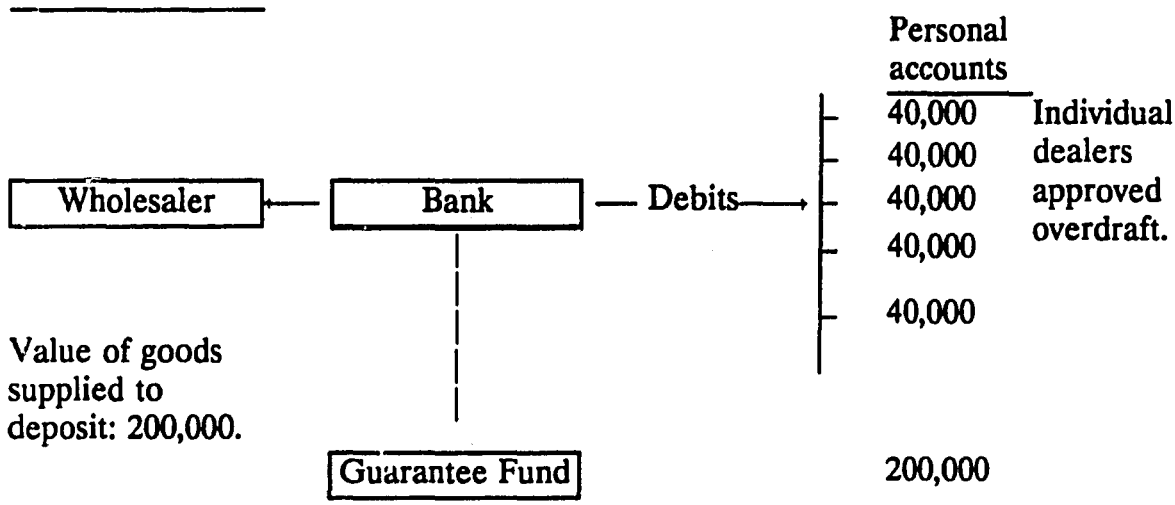

Above example shows that the dealers do not get money in hand but their private individual accounts are debited according to the value of goods they have received.

265

13. Every dealer must have a personal individual account with the bank where the Guarantee Fund is established.

14. The PD's pay back to their individual accounts and must settle the overdraft at a given deadline, set by the Board of the Guarantee Fund.

15. The PD's pay their overdrafts with interest. (At present, the lowest interest rate against 100 percent guarantee is 23.5 percent per annum).

16. If a dealer fails to settle his/her account at the given deadline, the Guarantee Fund pays the remaining outstanding. The lawyer attached to the Board will take legal action against defaulters.

17. If a PD does not sell all his stock by the end of the season, he might not be able to settle his account at the given time. The TSA's will carry out stocktaking twice a year and two weeks before the given deadline for repayments. The Board will calculate the value of the PD's stock and this is included in the next seasons overdraft.

At present, the Revolving Fund is a normal current account established in Standard Chartered Bank Ltd.

A Guarantee Fund would be established as a savings account, enabling the Fund to earn interest on its deposits.

Standard Chartered Bank has offered to pay 13.5 percent per annum but has also accepted that treasure bills can be deposited as guarantee against the overdrafts, which would earn 18 percent per annum.

In other words, 18 percent interest is the amount available per annum to maintain the value of the Guarantee Fund, which means that its value can only be maintained if inflation + non recovered defaults are below 18 percent.

CHAPTER FIVE

ALTERNATIVE FINANCIAL NETWORKS: THE VILLAGE SAVINGS AND CREDIT ASSOCIATIONS (VISACAs) IN THE GAMBIA

by

Korotoumou Ouattara

Douglas H. Graham

and

Carlos E. Cuevas

Table of Contents

I. A BRIEF HISTORY OF THE VISACAs IN THE GAMBIA 1

1. Introduction 1

2. Internal Regulations of the VISACAs 2

3. VISACAs and Credit Unions: Operational Philosophies Compared ... 3

II. MEMBERSHIP GROWTH 4

III. VISACA SAVINGS AND CREDIT FLOWS 6

1. Savings Flows 6
   - A. Membership Participation and Savings Accumulation Through Time 6
   - B. Growth of Deposit Outstanding Balances 7

2. Loan Disbursement in the VISACAs 8
   - A. Credit Flows Through Time and Term Matching Practices 8
   - B. The External Funding Issue 9
   - C. Loan Practices and Characteristics of the Loan Portfolio 10

IV. LOAN RECOVERY PERFORMANCE 12

V. LESSONS LEARNED AND CONCLUDING REMARKS 13

REFERENCES 17

List of Tables

Table V-1 Individual and Group (Kafo) Membership on a Cumulative End of Year Basis by Visaca and Gender from 1988 to March 1992. 19

Table V-2 Annual Profile of End of Year Total Membership for all VISACAs from December 1988 to March 1992. 20

Table V-3 Share of VISACA's Membership in Overall Village Population as of December 1991. 22

265

Table V-4 Female Participation in the VISACAs' Cumulative Membership as of March 1992 and Growth Multiples for Male and Female Members from December 1989 to March 1992. 23
Table V-5 Number of Deposit Accounts and Percent of Membership as Depositors for the Four Principal Deposit Accounts by VISACA, December 1991. 24
Table V-6 Volume of Deposits (in Dalasis) Accumulated Through Time from the Inception of Each VISACA to December 1991 in the Four Principal Deposit Accounts by VISACA. 25
Table V-7 Relative Importance of the Volume of Deposits in the Four Principal Deposit Accounts Accumulated Through Time from the Inception of Each VISACA to December 1991 by VISACA. 25
Table V-8 Outstanding Balances for all VISACAs Combined by the Four Principal Deposit Accounts, from 1988 to 1991. 26
Table V-9 Volume of Outstanding Deposit Balances for All Four Deposit Accounts by VISACA from 1988 to December 1991. 26
Table V-10 Total Value of Loans Issued, Average Loan Size in Dalasis, and Term Maturity (in Days) by VISACA from 1989 to 1991. 28
Table V-11 Selected Indicators of Women's Access to VISACA Loans from 1989 through 1991 by VISACA. 29
Table V-12 Documentation of Loan Recovery by Number of Loans and by Volume of Loans by VISACA for all Loans Issued from 1989 Onwards and Due for Repayment through December 1992. 30
Table V-13 Basic Documentation of Time Profile of Loan Repayments in Terms of Number of Loans and Rates of Repayment for Total Number of Loans Issued and Due for Repayment from January 1st 1989 Through December 31st 1991 by VISACA. 31
Table V-14 Annual Rate of Return for the VISACA Portfolio by VISACA for the Calendar Year 1991 32

List of Figures

Figure V-1 Individual and Group (Kafo) Membership Evolution by Gender from 1988 to March 1992 21
Figure V-2 Relative Size of Membership by Gender in All VISACAs as of March 1992 23
Figure V-3 Share of Cumulative Outstanding Deposit Balances from 1988 through December 1991 27

269

ACRONYMS USED IN CHAPTER FIVE

ADB	Agricultural Development Bank
CIDR	Centre International de Développement et de Recherche
CUs	Credit Unions
IFAD	International Fund for Agricultural Development
KFW	Kreditanstalt fur Wiederaufbau
MID-South	McCarthy Island South Division
NGO	Non governmental organization
TANGO	The Association of Non-Governmental Organizations
VISACAs	Village Savings and Credit Associations

270

CHAPTER FIVE
ALTERNATIVE FINANCIAL NETWORKS: VILLAGE SAVINGS AND CREDIT ASSOCIATIONS (VISACAs) IN THE GAMBIA*

I. A BRIEF HISTORY OF THE VISACAs IN THE GAMBIA

1. Introduction

Village Savings and Credit Associations (VISACAs) were launched four years ago in 1988 as a pilot project in The Gambia. The primary objective of these village banks is to collect local savings and make loans to individual villagers or groups. A total of six VISACAs function currently in villages in the Sapu area, located in the McCarthy Island South Division (MID-South), about 350 kms East of Banjul, the capital city of The Gambia. The first VISACAs were created in 1988 as a pilot project with the Gambian Ministry of Agriculture and managed by Centre International de Développement et de Recherche (CIDR) a French NGO (Non governmental organization), in cooperation with Kreditanstalt fur Wiederaufbau (KFW) of Germany and the Jahally-Pacharr Rice Project.

The Jahally-Pacharr small holders rice project of the Sapu area was originally launched in 1984 through support from IFAD, the ADB and the governments of Holland and West Germany. The project was designed to improve rice yields in the region. With irrigation, up to two rice harvests are possible in a year. Income from the sale of rice was expected to provide farmers with surplus liquidity and a continuous flow of income from which the VISACAs would be able to mobilize their savings. According to one of the Jahally-Pacharr project managers, the Sapu area produces 30 percent of all the rice consumed in The Gambia and accounts for 80 percent of all domestic rice production in the country. The population of the Sapu area is a good representative sample of the major ethnic groups present in The Gambia with 32.5 percent Fula, 32.5 percent Mandinka, 18 percent Saraholé and 17 percent Wolof.

---

* We would like to thank the people who have made this VISACA report possible by giving us full support during our mission in The Gambia and the Sapu area. They are: Jean-François LeGrand, CIDR Manager of the VISACAs in The Gambia was an invaluable colleague helping us throughout our work from the beginning. Fatou and Aissatou Camara, Gambian assistants to the CIDR and the Lamine Manneh and Amadou Cham were Gambia translators assisting the Ohio State University team. We also thank the director and staff of the International Trypanotolerance Center (ITC) in Bansang for providing us with accommodations and adequate working conditions. Kebbah Njie, the driver who accepted to spend all of the Ramadan fasting month with us in the very hot Sapu weather and did not complain once deserves special thanks. Finally, our thanks go to all the villagers with whom we had to deal with in the Sapu area and who were always accommodating in so many thoughtful ways.

271

The distance from Jahally to Pacharr is 15 kms. This area comprises 73 villages. Most villages are members of the rice irrigation project and enjoy ample access to pump-irrigated fields. Within the Jahally-Pacharr area, six villages were chosen to participate in the VISACA program. They are: Ahallulie (Wolof village), Sare Ngai (Fula village), Tabanani and Wellingara (Mandinka villages), Jahally and Madina (Saraholé villages). Four of the VISACA villages are members of the rice project. One village (Ahallulie) recently pulled out of the Jahally-Pacharr program because of the difficulties of maintaining their rice fields from such a long distance. An additional VISACA village (Tabanani) is currently waiting to be included in the rice project (after wells are dug to irrigate their fields). Besides rice cultivation, farmers in Jahally-Pacharr also grow groundnuts, millet, sorghum and raise livestock. Rice cultivation was traditionally a women's activity in The Gambia. But with the advent of the Jahally-Pacharr project, men have become actively involved in rice growing because of its potentially promising source of substantial revenues. A few NGOs that are present in the Sapu area are also helping women to set up vegetable gardens as a means to diversify their crops and income generating sources.

2. Internal Regulations of the VISACAs

Internal regulations of VISACAs are discussed and established at a general assembly of all villagers. The villagers decide upon membership conditions, interest rates for deposits and loans, and management procedures and practices. Membership consists of both individuals as well as kafo groups. Furthermore, members of kafo groups can and frequently do have individual accounts as well. Each VISACA has a management committee whose responsibilities consist of: (1) keeping members informed of VISACA activities; (2) expanding membership; (3) encouraging members to open savings accounts; and (4) evaluating and granting loans. Each management committee is composed of six to ten people, with an equal number of men and women chosen by all villagers during the preliminary meetings. Two to three cashiers are also selected to carry out bookkeeping responsibilities. Cashiers receive a small financial compensation for their services from the interest income generated by their VISACA. Committee members, on the other hand, are volunteers and do not receive any salary. All committee members and cashiers receive some initial numeracy training offered by the CIDR. The accounting practices used in the VISACAs have been kept simple during this initial phase. However, they will progressively incorporate some conventional double bookkeeping entries in the future.

Membership fees have been sufficiently low (10 and 20 dalasis) to allow everyone the opportunity to become a member. Membership is required to make deposits and/or receive loans. Some VISACAs require their members to make a one-time deposit of any amount

in order to become eligible for future loans.[1] In general, VISACAs do not try to match the deposits of a particular person with his/her loan request. Instead they try to match the term structures of assets and liabilities of the VISACA as a whole. Loans are made out of the three types of savings instruments, i.e. three, six, and nine months "term deposit" accounts. Twelve-months deposit accounts exist but have not received too much attention from VISACA members. Non interest bearing current account deposits (i.e. demand deposits) are also available but are not used for loan purposes, i.e. the VISACAs hold 100 percent reserves on demand deposits.

Annual interest rates are set through discussions at open meetings including all villagers. It is interesting to note that these villagers after discussion voted to set relatively high positive real rates of interest. Four VISACAs set annual deposit rates at 20 percent and loan rates at 40 percent. Two VISACAs established 40 percent annual deposit rates and 60 percent annual loan rates. Thus, the gross intermediation margin reaches 20 percent between deposit and loan rates in all VISACAs. This just happens to be the same margin recorded by commercial banks in The Gambia (though banks achieve this with lower deposit and loan rates as discussed in Chapter I). These high positive real rates of interest allow the VISACAs to effectively compensate for inflation (currently 10 percent) and to generate interest earnings to cover incidental expenses and, most importantly, create a growing surplus to service new loans. Initial Capital is made up of membership fees which are quite low and would not offer at present adequate collateral to external partners such as commercial banks. These rates are set on an annual basis so that a 6 month loan would pay 20 percent interest at a 40 percent annual rate and a six month deposit would earn 10 percent interest at a 20 percent annual rate.

3. VISACAs and Credit Unions: Operational Philosophies Compared

In many respects VISACAs are similar to the generalized model of Credit Unions (CUs). Nevertheless there are some operational differences that need to be pointed out. Credit Unions are organized under rules and regulations that are fairly uniform wherever they exist. The member's share contribution in a CU is crucial in determining eligibility and size of loan. Credit union members have a right to a loan equivalent to a multiple of their share (frequently two to one). At times deposit accounts in some CUs are used (in addition to shares) as the basis to establish the loan multiple. In this case the deposit account is blocked during the life of the loan. These loan to share multiples for individual loans are not part of the VISACA's loan practices. The VISACAs do not have any explicit loan size criterion for individual borrowers based on shares or deposits. However, it is clear that they try to balance the term maturity of their volume of deposits to the same maturity (or less)

[1] It is interesting to note that CIDR did not ask the villagers to tie savings behavior to credit. However, on their own initiative the village VISACAs (4 out of 6) implemented the requirements of some prior savings before receiving a loan. The CIDR wisely did not interfere.

for a comparable volume of loans. Thus, a volume of three months loans (or less) is matched (i.e. supported) by a comparable volume of three months deposits, six months loans with six months deposits, etc. Hence the VISACAs engage in an institution-wide term matching of assets and liabilities instead of an individual client criterion between loan and savings. Also non-members can own a deposit account in a CU in contrast to a VISACA where only members can hold deposits. Finally, current accounts (i.e. demand deposits) do not exist in CUs as they do in VISACAs.

The sharpest difference between VISACAs and CUs pertains to interest rate policy. As pointed out earlier, VISACAs currently charge annualized short term loan rates of 40 or 60 percent. Credit unions, on the other hand, generally charge a 12 percent annual interest rate on loans and usually require installment payments of principal plus one percent interest each month. VISACAs only expect payment at the end of the loan term. However it should be pointed out that the effective interest rate on CU loans turns out to be much higher than the stated 12 percent annual rate since the deposited share is in practice rarely withdrawable, hence it represents an additional cost (above and beyond the 12 percent annual interest rate) to secure a loan. This adjustment notwithstanding, VISACA loan and deposit rates are much higher than those normally found with credit unions.

Another pertinent difference lies in the much broader role for non-member villagers to influence interest rates and other loan and deposit terms and conditions in the VISACAs in open village assemblies. Credit Unions, in contrast, restrict these decisions to their membership. The more open village approach creates local legitimacy and acts as a member recruitment vehicle. This is no doubt feasible in the relatively small sized villages in which the VISACAs currently operate. It would likely be less feasible in larger villages or towns.

There is also usually a formal limit on the size of a single loan in a credit union whereas this is not explicit in a VISACA, although it would appear that an implicit threshold is recognized. Double entry bookkeeping is the standard in all CUs (though sometimes imperfectly administered) whereas more rudimentary single entry procedures are currently practiced in the VISACAs. Any realized net earnings in CUs are given to shareholders as dividends or paid out as patronage refunds to borrowers. In VISACAs net interest earnings are used for further loan activity. In VISACAs, net interest earnings are used for further loan activity and mainly for strengthening of VISACA reserve/capital. Finally, kafo groups as well as individuals can be members in VISACAs while individual membership alone characterizes credit union membership.

II. MEMBERSHIP GROWTH

The first VISACAs opened in October 1988 were Jahally and Sare Ngai. Three more VISACAs, Ahallulie, Wellingara and Madina were launched one year later in 1989. Tabanani was the final VISACA founded in February 1991. Some VISACAs accept

members residing in neighboring villages. As of December 1991, a total of 1305 villagers and kafo groups were members of the six VISACAs of the Sapu area, with 676 women, 574 men and 55 kafo groups (Table V-1) according to the VISACAs membership files.

Kafos are groups of individuals that have common interests and organize for diverse reasons. Originally, kafos were an intrinsic part of every Gambian village and were the symbol of social cohesion as well as solidarity as every villager automatically belonged to a men's or women's kafo. They have been gender specific and involved mainly in community activities (digging public wells, helping neighbors in the fields, building or repairing houses, cleaning up village streets, etc.). A number of kafos originally also engaged in credit activities. Today, kafos vary widely in size and nature (e.g. soccer club kafos, political party kafos, gardening kafos, NGO kafos, etc.). Some kafo groups have even crossed the gender line and have male as well as female members (e.g. VISACA committee kafos, health center kafos, etc.).

By March 1992, the total membership of the six VISACAs had reached 1384 villagers and groups with 52 percent women, 44 percent men and 4 percent kafos. Of the 56 kafos in the six VISACAs, the majority (21 kafos) were found in just one village while the other five VISACAs had an average of seven kafos. The VISACAs as a group recorded a growth in membership in 1989 roughly 2.6 times their 1988 membership. In large part this was due to more villages joining the first two VISACAs bringing in 223 new members (Table V-2.). The original two villages increased their own membership by 87 members. Growth was lower in 1990 (57.6 percent), the year no new VISACA was launched. However, in 1991, with the addition of Tabanani, the most recently created VISACA, total membership increased 65 percent from 1990. Another 6 percent increase was recorded within the first three months of operation in 1992.

Table V-1 and Figure V-1 show the growth trend of the membership in VISACAs from their creation in 1988 up to March 1992. The growth multiple ratio in column 6 of Table V-2 obtained by dividing the cumulative total membership as of March 1992 by the total membership recorded back in December 1989 gives a better insight into the pattern of growth that might be anticipated in the future for all VISACAs. For the five VISACAs then in operation, a total growth multiple of 2.8 suggests that for the two year and three months to come, VISACAs will at best triple their original membership if they are to emulate their past growth. It is evident that any particular VISACA realizes much of its membership growth in the very first year of its creation, capturing up to 30 percent or more of the total economically active adult population in their village. The total membership recorded by the VISACAs as of December 1991, shows that up to 52 percent of the villagers are members in some VISACAs and, on average, one-third of the villagers in all the six villages are VISACA members (Table V-3). If we bear in mind that 30 to 40 percent of the total population consists of minors, then (taking a 35 percent average for the non-active population) VISACA membership accounts for 45 percent of the adult economically active age group.

275

Women have shown a strong participation in the VISACAs. By March 1992, women represented 51 percent of the total membership of all six VISACAs. They recorded a membership growth of 72 percent from 1990 to 1991 compared to a male membership increase of 59 percent over the same period for all six VISACAs (Table V-4). Women form the majority in the two Saraholé villages (60 percent and 59 percent respectively). However, they represented only 19 percent of the Fula village's membership. We do not have any unique evidence to explain the reasons behind the relative predominance of women in the two Saraholé villages where curiously most men are involved in trading and therefore, one would expect these men to use the VISACA loan services to meet their cash flow. In the Fula village, the unusually low participation from women (19 percent) reflects the overall low village population, i.e., only a small percentage of the village (16 percent) are VISACA members. Table V-4 and Figure V-2 also highlight the relative growth by gender from December 1989 to March 1992. Overall the growth multiples indicate that both men and women members increased almost three fold (2.8 and 2.9 respectively) over this period of two years and three months. However female membership grew much more rapidly in only two VISACAs. Male membership grow more rapidly than female membership in two other VISACAs. The data in Table V-2 also shows that Ahallulie and Madina are the rapid growth VISACAs overall while the remaining three are the slow growth associations.

III. VISACA SAVINGS AND CREDIT FLOWS

1. Savings Flows

A. Membership Participation and Savings Accumulation Through Time

The VISACAs started collecting deposits in 1988 and by December 1991, members with three, six and nine month savings accounts represented 47.4 percent of the total membership (Table V-5). The most popular savings instrument among the membership is the six months term deposit. Twenty three percent of the membership held these accounts. On the other hand, current accounts (demand deposits) recorded a relatively low 6 percent membership participation (Table V-5). This low percentage of current accounts held by members is no doubt a reflection of the low demand for an account that pays no interest and is only accessible once a week (i.e. VISACAs are only open for one day a week, hence current account deposits can only be withdrawn once a week).

By December 1991, a total of 399,693 dalasis had been mobilized cumulatively from their inception by all six VISACAs in 698 demand deposits and savings accounts (see Table V-6). At an average exchange rate of 1.00 dollar = 8 dalasis (the dollar exchange rate went from 6.50 dalasis in 1988 to 9.00 dalasis in 1992), this amounts to a savings inflow of $49,961.6 dollars. Deposits in all accounts range from 10 dalasis to a maximum of 7,000 dalasis. The relative importance of the four principal deposit accounts varies by VISACA

and, as can be seen in Table V-7, three month term deposits were the most popular deposit instrument in Village 1 (Wolof) and Village 2 (Mandinka) (63.6 and 43.2 percent respectively). Members preferred six month term deposit accounts in Village 4 (Mandinka) and Village 6 (Saraholé) (43.8 and 45.7 percent). Nine month term deposits were favored in Village 3 (Fula) and Village 5 (Saraholé) and accounted for 58.1 percent and 45.2 percent, respectively, of all accumulated deposit funds over this period. Overall all VISACA members from all six villages have a relative preference for the six months term deposit account which captured 33.8 percent of the accumulated deposit flow from 1988 until December 1991.

Another interesting pattern can be seen in Table V-7 in the intertemporal bias for shorter or longer term deposit instruments. Village 1 and Village 2 are predominately short term VISACAs (i.e. the relative weight of current accounts and 3 month deposits is overwhelming in total deposits). On the other hand, the other four VISACAs are predominantly associations with a bias for longer term deposit instruments (6 or 9 month deposits). This particularly stands out for Village 3 and Village 5. One factor seems to lie behind this contrasting intertemporal preference for different deposit instruments. The first two VISACA villages mentioned above are not part of the Jahally-Pacharr Rice Project and therefore do not grow rice. The other four are. Savers cannot afford to lock themselves into relatively illiquid savings if they don't have alternative streams of income to service their liquidity needs throughout the year. In effect, the rice project creates this liquidity for the four longer term VISACAs. They can rely upon two irrigated rice harvests per year while the other two non-rice villages cannot. Being subject to much less certain income flows, they must protect their liquidity with shorter term deposit instruments.

B. Growth of Deposit Outstanding Balances

Another revealing perspective is the trend in deposit growth over time that can be seen through the change in the end of year outstanding balances for the four principal deposit instruments for all VISACAs combined since 1988 in Table V-8. As of December 1991, a total of 188,006 dalasis was outstanding in 485 accounts resulting in an average balance of 388 dalasis per account. The growth was a little over three-fold for total outstanding deposits of all VISACAs in Table V-8 for the two years from January 1st, 1989 through December 31st, 1991. Current account balances grow most rapidly (about 8 fold) followed by 6 month deposit balances (4 fold) with the longest term 9 month deposit instrument growing the slowest (2.4 times). As pointed out earlier in the cumulative data, the 6 month deposit account was uniformly the most popular savings instrument from 1989 to 1991, accounting for 43 percent of total deposits in 1989, representing 58 percent in 1990 and 49 percent in 1991.

Of all VISACAs, Village 4 ranked first with the largest share of outstanding balances through time, capturing 38.4 percent of total outstanding balances for the four years combined (see Table V-9 and Figure V-3). Village 6 and Village 5 were second and third with 28.1 percent and 23.9 percent respectively. Village 1 had only 4 percent of all outstanding

deposit balances summed up for four years, closely followed by Village 2 with 3.5 percent. Village 3 was last with only 2.1 percent (Table V-9 & Figure V-3). Again, the two non-rice project village VISACAs (Village 1 and Village 2) stand out as relatively less secure and less wealthy villages mobilizing a much smaller volume of savings deposits. At the same time, Village 3 is the only rice-village that also appears insecure in its deposit behavior perhaps because rice constitutes a rather minor part of the villages activity. It records the slowest growth in deposits of all villages, has the smallest participation by women and the highest number of kafos. It is also the village most involved in cattle raising activity (a classic male occupation). Among other things, this suggests that an agricultural base to village life leads to more regular income flows and savings than one based on livestock herding.

It is still too early to draw any definite conclusions about the seasonality of deposits in the VISACAs because no definite pattern is evident in the data. However, the economic environment in the Sapu area and the VISACA villages is a useful barometer to make a few predictions. In all villages, deposits should be expected between February and May when groundnuts are sold. In the months after the groundnut season, commonly called the trade season (June to January), little money would be collected in VISACA villages where irrigated rice is not grown. The only remaining source of income for villagers would, therefore, come from secondary off-farm activities like trade and handicrafts. On the other hand, villages actively engaged in the Jahally-Pacharr irrigated rice project (Village 3, and especially Village 4, Village 5 and Village 6) and enjoying two harvests of rice a year would be able to maintain a less seasonal pattern of deposits throughout the year. In general, for these villages, deposits would increase again by August and September as the dry season rice harvest is sold.

2. Loan Disbursement in the VISACAs

A. Credit Flows Through Time and Term Matching Practices

Most VISACA members list loans as the primary reason for joining the association. Lending is an important part of the VISACAs' operation and access to loans is valued highly. Despite what some may think of as high interest rates (40 and 60 percent), the VISACA loan rates compare favorably to village money lender rates that can reach 140 percent. The confidentiality involved in individual loan disbursement is another feature members like about the VISACA.

Since the VISACAs began granting loans in 1989, a total of 366,709 dalasis (45,838.6 dollars) have been issued cumulatively to 1266 members as of December 1991 resulting in an average loan size of 290 dalasis or about 36 U.S. dollars equivalent (see Table V-10, columns 8 and 12). The average loan term for all loans issued during this period has been 156 days (five months) which, not surprisingly, is approximately one month less than the preferred deposit term length. As a general policy, all VISACAs try to match the term

structure of a given volume of loans with that of a comparable volume of deposits so as to be able to service withdrawals. Moreover, to instigate the savings habits of their membership, some VISACAs now require a one-time deposit for members to be eligible for future loans. The proportion of people who receive a loan is still very much dependent on membership involvement through savings accounts activities that comprises the loan pool. Consequently, 48.3 percent of the members were issued 630 loans in 1991, very much in line with a total participation of 47.4 percent of the members holding the 619 existing savings accounts at the same time.

The term matching feature so characteristic of VISACAs deserves more comment. Any financial institution must be prepared to engage in responsible liquidity or cash flow management. Loan repayments must be scheduled in such a way as to facilitate deposit withdrawals. Moreover, this must be programmed so that possible delays in repayments do not lead to a liquidity crunch (i.e. an inability to service regularly scheduled deposit withdrawals or renewals). The VISACAs protect themselves from this risk through two mechanisms: the high interest rate margins pointed out earlier and the staggered scheduling of loan terms for a period shorter than the deposit instrument supporting this lending. The twenty point margin between deposit and loan rates generates substantial net interest earnings to contribute to the funds needed to cover deposit withdrawals in the face of late loan repayments. At the same time, a given volume of three month deposits are drawn upon to support a comparable volume of loans but staggered or shortened to two months or less in term, six month deposits support loans at five month terms or less, etc. In this way, VISACAs are able to meet obligated term deposit withdrawals when they mature except in the case of extreme loan delinquency, a rare event in most VISACAs.

B. The External Funding Issue

The VISACAs were able to mobilize 304,098 dalasis from their savings accounts (excluding current accounts which are not used for loans) while, as pointed out above, 366,709 dalasis were issued cumulatively to members as loans. The shortfall in funding was obtained through external funds in June 1991. External donors lent to the VISACAs' management at 11 percent annual interest rate for nine months. The management in turn lent to two VISACA villages at the same 11 percent interest rate for the same nine months maturity (without revealing the source of the fund). Each village then lent to its respective members at 40 and 60 percent annual interest rates for eight months. Borrowers thus paid an effective 27 and 40 percent interest on their eight months loans. For the first experiment with donor funds, the margin for VISACAs was 18.4 percent [(40% x 8/12)-(11% x 9/12)] and 31.75 percent [(60% x 8/12)-(11% x 9/12)] respectively. In fact, Village 5 has seen a dramatic increase in the number of loans granted from 101 loans in 1990 to 234 loans in 1991, after receiving this injection of outside money. Village 4 also received some of this money. This volume of outside money was placed in nine month deposits with loans going out for eight months terms, thereby lengthening the term maturity (term transformation) beyond the more common five month term supported by locally mobilized deposits. Among other things, this increases the probability that more loans could be issued for agricultural operations that

have longer gestation periods than the short-term trading activities typically supported by VISACA deposits. In practice, however, many of these long term loans were paid off early following the harvests of groundnuts and rice in December and January. It would appear they were used to smooth consumption expenditures over the period June-December and then paid off with harvest proceeds.

This external funding of loan activity raises some important questions. Outside funds can make a contribution to VISACAs through allowing them an opportunity to expand their loan activity beyond the level of their deposit resources. At the same time, it allows lending for longer term loans, thereby opening up the possibility of incorporating more agricultural loans in the portfolio that heretofore had been dominated more by trading loans. Because these loans were granted at a time when people were in need of seeds and fertilizer for their upland fields (end of May 1991), it is not unlikely that these loans directly supported agricultural undertakings. They also probably played the equally valuable role of smoothing the cash flows for consumption over this period. In any event, the fungible nature of financial inflows and outflows make it difficult to identify the probable use of funds. No doubt they were used for a variety of purposes. More important for our discussion is that this external funding can also introduce a donor virus into a healthy local savings and loan effort. The careful loan evaluation and loan recovery practices can quickly collapse into a "take the money and run" psychology since it is not the villagers own money (or the savings of their neighbors). In short, borrowers would not encounter any severe sanction in not repaying externally financed loans.

The VISACAs, fortunately, have carefully and laboriously established their indigenous village-based and village-run identity based on village savings. Hence loan recovery (as we shall see shortly) has been reasonable. The gradual introduction of some outside funding could possibly allow these associations to expand their loan activities and engage in some term transformation as long as the relative share of outside money remains a distinctly minor share of total funding and is not associated with any earmarked or targeted loan scheme. Targeting merely signals borrowers that the money comes from outside resources and, not surprisingly, it is precisely this part of the association's loan portfolio that would then not be repaid. Currently outside money has reached almost 10 percent (9.86 percent) of total funding. Fortunately, all these loans were repaid by March 1992, indicating that the experiment worked successfully this one time. Nevertheless, it would be risky to increase this outside funding much beyond the 20 percent range without placing at risk the VISACAs' incentive structure for repayment and saturating the market for secure lending opportunities in these villages.

C. Loan Practices and Characteristics of the Loan Portfolio

Loans are granted on a first-come, first-served basis according to available funds. The VISACA loan committee makes the final decision on loan approval and the amount approved. Collateral, often in the form of livestock or farm implements and gold jewelry for women, is required to secure a loan. Moreover, field interviews suggest that this

collateral is linked to a sufficiently credible local enforcement milieu within the village to ensure good loan repayment. Most loan applicants indicate trading as the purpose of their request although loans are issued for a wide variety of other purposes. The VISACAs do not engage in loan targeting. They quickly realized that money is fungible and consumption credit is just as productive as any other loan. Indeed, the availability of consumption loans can smooth out consumption flows throughout the year, thereby releasing personal savings to be used for investment purposes rather than consumption. In brief, the availability of consumption loans can be a form of insurance that guarantees consumption levels, thereby leading indirectly to an increase in investment through the borrowers savings.

In the year 1991 alone, 630 loans were granted to 48.3 percent of the total membership of the six VISACAs. Loan sizes in the VISACAs range from a low ten dalasis to a maximum of 3,000 dalasis and loan duration never exceeds a year. According to a CIDR report in 1990, most loans went out for trade purposes as 56 to 97 percent of VISACA loans were given out to shopkeepers, for petty trade, sale of coarse grain, and cattle trading (CIDR, 1990). The high share of loans for trading activity and fewer loans for farming was explained by the presence of other NGOs in the area (Action Aid) and the Jahally-Pacharr Project that specialized in granting fertilizer and farm equipment loans at very low interest rates. Given the relatively short term loans in the VISACAs (more commonly three to six months), most loans would not be expected to support agricultural production that has a longer seasonal gestation. Many loans are used to finance village trading activity in which the inventory turnover of goods is consistent with the shorter term structure and where trade margins can support the higher interest rate than those commonly associated with agriculture.

Women account for 52 percent of total VISACA membership and are equally well represented in the loan portfolio. VISACA female members received 659 loans as of December 1991 which accounted for 52 percent of the 1266 total loans cumulatively granted to all members from the inception of the VISACAs (Table V-11). Loans requested by women are mainly for petty trade and handicrafts, according to the same 1990 CIDR report, and based on some information from one of the VISACAs' files. For three consecutive years from 1989 onwards, more than 50 percent of all loans were issued to women while, on average, 40 percent of the total female membership of the VISACAs has been able to secure a VISACA loan.[2]

[2] It is important to point out that kafos have become less important in VISACA loan activity. Kafos very rarely apply for loans, but they participated in an important way in the savings effort, particularly at the beginning of the VISACAs. Individual kafo members are now more commonly applying for individual loans to satisfy their needs.

IV. LOAN RECOVERY PERFORMANCE

Table V-12 documents loan disbursement and loan recovery for the VISACAs for all 954 loans issued and due for repayment from January 1st 1989 through December 31st 1991. All due dates for repayment fell within this three year period. Five VISACAs had complete information on loan disbursements and loan recovery. Since Village 2 began operations only in 1991, none of its 29 loans issued in 1991 fell due during this year. One VISACA, Village 3, issued 50 loans during this two year period, however, the research team was unable to secure any information on the loan repayment status of these loans.

Therefore, based on the information on the four VISACAs that had a documented history of loan disbursements and loan recovery from January 1989 through December 31st 1991, the overall repayment rate was an outstanding 94.4 percent by number of loans and 94.7 percent by the volume of loans (Table V-12, column 8). The best performing VISACAs were Village 6 and Village 1 with a remarkable 97 percent loan recovery rate over this three year period. The lowest repayment was recorded by Village 5 at 90 and 92 percent a still very fine performance. For the VISACAs as a whole, some delay in loan repayment is a very common phenomenon, as Senegalese purchasers have taken 4 to 6 months to pay Gambian farmers for their groundnuts. This suggests that VISACAs may well be playing an interesting insurance role by allowing these groundnut producers and traders, along with other borrowers, more flexible loan terms to repay their loans somewhat later than scheduled.

Table V-13 highlights this issue in detail through documentation of the time profile of loan repayments for all 906 loans in the four VISACAs discussed above. Overall roughly 37 percent of all loans due were repaid promptly or in advance whereas 36 percent of the loans were repaid one month late, approximately 16 percent between one and three months late, and 4.3 percent more than three months late (panel B, column 7). It is interesting to note that a significant part of all loans (30 percent) were repaid early. As mentioned earlier, no repayment information was available on the Village 3 VISACA which has had a sluggish operation for some time now, recording the lowest share of village membership and the slowest growth of all VISACAs, while more investigation of this VISACA is called for, oral evidence in field interviews suggest that most all loans have been repaid.

In summary, the VISACAs, record outstanding repayment records over this three year period. No other formal or NGO financial intermediary in The Gambia can match this performance with the possible exception of the BICI and SCBG, but no data on loan recovery or arrears are publicly available for these private banks, hence comparisons are not possible. Furthermore, judged on the risks inherent in the VISACAs portfolio with an overwhelming low income rural constituency, the above performance stands out as a remarkable achievement.

To place this in a relevant context, the credit union movements in Togo and the Cameroon are frequently pointed to as the outstanding success stories for non-bank financial intermediaries in Sub-Saharan Africa. Yet, the Togo movement in 1986 after 20 years of history and donor support still registered 18 percent of its loan balances as more than one year overdue. (Cuevas, 1989).

Another pertinent performance indicator is the rate of return of the VISACA loan portfolio. This was estimated for the VISACAs for the calendar year 1991 (see Table V-14). Overall the five VISACAs register a 26 percent weighted average annual rate of return, a promising result reflecting the solvency of the movement during this period. Village 3 registers the highest annual rate of return (40 percent). This grows out of its higher average annual interest rate (60 percent) vis-a-vis the other VISACAs in the table and the fact that a larger majority of its loan portfolio was issued for a longer term (8 months or more) leading to a higher average annualized interest rate compared to other VISACAs (where 5 to 6 month term loans were more common).

A final indicator of the remarkable performance of the VISACAs is its loan deposit ratio of 100 percent, i.e. the term matching practice of the VISACAs for loan and deposits, excluding demand deposits, means they operate with a one-to-one loan deposit ratio. This ratio is much higher than that characteristic of credit unions worldwide (50 to 60 percent) who hold much of their savings in deposit accounts in branches of banks rather than using them for loans. Similarly, this ratio is much higher than that of the private banks in The Gambia (33 percent) who allocate most of their deposit resources into T-bills or other non-loan assets. This high ratio for the VISACAs implies a "no reserve" policy for time deposits, a seemingly risky practice. However, since 100 percent reserves are held on demand deposits this compensates for no reserves held on time deposits.

V. LESSONS LEARNED AND CONCLUDING REMARKS

The single most important feature behind the VISACAs success is the local savings mobilization dimension that has nurtured and expanded the funding base from its inception in 1988 to the present. This feature quickly established the legitimacy of these young associations. It meant that villagers controlled their own association, guaranteed their autonomy in decision making and introduced a moral authority for responsible loan administration and loan recovery of their own funds. This locally mobilized resource base clearly created the environment for local village assemblies to meet and discuss such questions as the composition and responsibilities of the management committees and the establishment of interest rate policies and composition of savings instruments.

Six important operational features have come out of these discussions and have shaped the positive performance of the VISACAs since their inception. First, the depositors were paid positive real rates of interest on their savings and borrowers have paid positive

rates on their loans. Moreover, the effective interest rate earned on deposits and paid for loans are higher than those earned and paid in the formal financial markets of The Gambia in Banjul. This is an important lesson underscoring the fact that rural borrowers in fact can and do pay 20 to 30 percent interest rates on 6 month loans (based on 40 to 60 percent annualized rates). On the savings side, depositors in the VISACAs earn substantially more on their savings than do depositors in formal banks. Six month deposits (the most commonly held deposit instrument) earn either 10 or 15 percent interest (based on annualized deposit rates of 40 to 60 percent). Banks at best pay 12 to 14 percent annualized interest on time deposits.

Second, loans are not targeted in the VISACAs. Since outside money played no initial role in the funding base for on-lending, villages had the autonomy to decide whether loans should be targeted in any way or remain untargeted with management committees servicing loan requests on a first come, first serve basis. They decided on the latter course of action with positive results in the end as a diversified loan portfolio contributed to good loan recovery.

Third, short term loans of six months or less have predominated in the VISACAs. Only a few loans beyond 9 months have been made. Among other things, this implies that trading activity, artisan activities and handicrafts, and other non-agricultural activities will necessarily have to play an important role in any village banking initiative. These activities generate value added in their own right, are more suited to shorter term finance and can cover the interest rate charges with their earnings. Nevertheless, some farming loans are made, especially to the rice irrigated farmers who benefit from a two harvest season. More importantly, farm families are involved in many of the off-farm and non-farm activities mentioned above and clearly benefit from VISACA loans. Forcing targeted loans into what are misleadingly called "productive" activities is a misplaced and counterproductive effort often undertaken by donors. It is refreshing to see the VISACAs have been unencumbered by this typical form of donor intervention.

Fourth, the VISACAs have managed their assets and liabilities intelligently by carefully matching the term structure of loans and deposits in a consistent fashion to meet liquidity demand. This is an extremely important lesson that should be followed by all village based savings and loan initiatives. These organizations must calibrate the cash flow derived from their loan repayment schedules to meet the term schedule of deposit withdrawals. Among other things, this implies that several deposit instruments should be made available so that several loan term maturities can be offered to meet loan demand consistent with these deposit term instruments. The VISACAs have shown that a safety cushion should also be programmed into this term matching exercise to cover for the fact that some loans may be repaid with delays. Hence, loan maturities are typically issued for slightly shorter terms (usually one month) than the deposit term obligation supporting them.

The fifth operational feature that comes out of the VISACA experience is the important role of collateral. Farm equipment and livestock were the typical forms of collateral

pledged by borrowers. Management committees take these pledges responsibly and will take possession of the collateral of seriously delinquent borrowers. The important lesson here is that the credibility of local enforcement of collateral obligations will only work when it is based on local savings (that are not being repaid) and when local officials support these actions as ethical and proper. It would appear that the threat of taking collateral is sufficiently credible in the VISACA villages to encourage responsible loan repayment behavior.

Last but not least of all the features is the self-management approach to the VISACAs. The successful experience here has proven once again that villagers can be and should be given more, if not full responsibilities to manage their own finances. Along with these six operational features are two important lessons from the donor program design for the VISACAs that merit discussion. First, the VISACA donors were only interested in setting up VISACAs where there was substantial non-agricultural activity (or conversely, an amply funded region-specific agricultural development project that generates substantial non-agricultural income streams). This grows out of a concern that a local village savings and loan effort could not hope to pay savers an attractive return on savings through interest earnings from loans primarily based on agricultural activity alone. The loans are too risky, the returns too problematical, and the term maturity too long to service 3 to 6 month deposit instruments that would be required to attract local savings. People in rural areas cannot afford to lock up their savings for 12 month periods, and certainly not for interest rates as low as the average rate of return to farming in these settings (adjusted for risk and default). This is an extremely important lesson for any NGO effort designed to issue loans through locally mobilized savings in rural Gambia.

The second important lesson of program design in the VISACA experience is to appreciate the logic of a two stage sequence of donor involvement in promoting local savings and credit associations. In the first stage, donor support was focused on promotion, technical assistance, and training, with a long term resident advisor working closely with the VISACAs. No external funding was provided for on-lending. The objective was to promote properly remunerated local savings deposits as the exclusive base for on-lending, thereby ensuring local identity and local control and autonomy in decision making, both of which are essential ingredients for promoting responsible loan recovery.

The second stage, some three to four years later, allows for some donor funding to be used for on-lending through the vehicle of 9 month or 1 year deposits. This expands the base for on-lending beyond the limits set by the local deposit base. More importantly, it extends term transformation into longer term loans than would be possible with locally based term deposits. The loan activity that grows out of this action is untargeted and therefore blends into the generalized practices used for other loans. Still, there is little likelihood that these longer term loans would move substantially into agriculture if borrowers have to pay 40 to 60 percent annualized interest charges (depending on the VISACA). It is unlikely that any agricultural activity earns that kind of return in The Gambia. An important caveat to this second stage is to limit the volume of outside funding for on-lending to no more than

15 to 20 percent of total lending sources. Otherwise, the image of local identity, local control and, most importantly, local savings could become jeopardized as a donor virus contaminates the portfolio with an entitlement or dole psychology, and borrowers "take the money and run."

The next stage of the VISACA movement is the most challenging, namely, expanding the movement into a larger number of villages in several other regions of the country. This action could begin to create a network of VISACAs that, in effect, would generate scale, scope and spatial economies and possible linkages to the banking system. This would occur only if a second level regional federation would emerge that could play a role in intermediating between surplus and deficit units within the movement, become a lender of last resort, and a service center for auditing and other technical assistance. It may be premature to expect this to emerge in the immediate future. However, it is not an unreasonable long term objective as long as there are other regions in The Gambia that can generate the income streams for savings mobilization comparable to those generated by the Jahally-Pacharr project.

The current discussion about setting up a regional training center for NGOs to expand the VISACA experiment to other regions is opportune and potentially promising. It is time for NGOs to sit down and discuss the lessons learned from the VISACA experience. It is also opportune to identify the information needed to design and launch new VISACA initiatives. Finally, it is pertinent to spell out the type and magnitude of start up (non-loan) subsidies that are needed to launch viable long term village banks. In this regard, heavy expenditures on literacy, numeracy and bookkeeping training are required in large part because the Gambian government has failed to invest in basic schooling in the countryside.

The issue that surfaces at this point is whether an initiative of this scope and magnitude combined with other international donors would preempt the perceived role of TANGO currently envisioned in the rest of the NGO community in The Gambia. At the very least, it could represent a parallel effort emulating many of the roles and functions currently under discussion in TANGO. The contrasting operational philosophies between the VISACAs, on the one hand, and other NGO operators in The Gambia, on the other hand, perhaps have led to this separate independent stance. Nevertheless, it would be in the interest of TANGO officials to encourage the VISACAs from their current observer status, to advise the TANGO movement and play a decisive role in shaping TANGOs agenda. The VISACAs are the only entity in The Gambia that has created a viable, village based savings and credit movement. It would be wise for the TANGO to build on this experience and incorporate the VISACA group to play a meaningful role in designing TANGO's future.

REFERENCES

Carney, Judith, "Struggles over Crop Rights and Labor Within Contract Farming Households in the Gambian Irrigated Rice Project," The Journal of Peasant Studies, Volume 15, No. 3, April 1988, pp. 334-349.

Chao-Veroff, Renée, "Development Banking for the Benefit of the Poor," paper presented in panel Caisses Villageoises d'Epargne et de Credit Autogerées, Wirtschaftförderung & Finanzwesen, GTZ, January 1991.

CIDR, "Jahally-Pacharr Village Savings and Credit Associations," Present Draft, Centre International de Developpment et de Recherche (CIDR), May 1990.

Cuevas, Carlos, "Togo," in Rural Finance Profiles in African Countries, Volume 2, Mario Masini (ed.), Finafrica, Cariplo, Milano, 1989.

Ministry of Agriculture and CIDR, "Jahally-Pacharr Self Managed Village Banks," Ministry of Agriculture of The Gambia and CIDR, May 1989.

Mukesh, Eswaran, and Kotal Ashok, "Credit as Insurance in Agrarian Economies," Journal of Development Economies, 31, 1989, pp. 37-53.

Shipton, Parker, "Time and Money in the Western Sahel: A Clash of Cultures in Gambian Rural Finance," in Markets in Developing Countries: Parallel, Fragmented and Black, Michael Roemer and Christine Jones (eds.), ICS Press, San Francisco, 1991.

Shipton, Parker, "The Rope and the Box. Group Savings in The Gambia," in Informal Finance in Low Income Countries, Dale Adams and Del Fitchett (eds.), Boulder, Colorado, Westview Press, 1992.

Zeller, M., J. Von Braun, K. Johm and D. Puetz, "Sources and Terms of Credit Faced by the Rural Poor in The Gambia: Policy Implications," paper presented at the International Seminar on Finance and Rural Development in West Africa, Ouagadougou, Burkina Faso, 21-25 October, 1991. Cosponsored by The Ohio State University, AID, and CIRAD, Montpelieu, France.

287

Table V-1 **Individual and Group (Kafo) Membership on a Cumulative End of Year Basis by Visaca and Gender from 1988 to March 1992.**

	1988			
VISACA	MALE	FEMALE	KAFO	TOTAL
Village 1	0	0	0	0
Village 2	0	0	0	0
Village 3	22	1	17	40
Village 4	0	0	0	0
Village 5	0	0	0	0
Village 6	70	79	3	152
TOTAL	92	80	20	192

	1989			
VISACA	MALE	FEMALE	KAFO	TOTAL
Village 1	14	2	1	17
Village 2	0	0	0	0
Village 3	34	10	20	64
Village 4	34	48	1	83
Village 5	57	61	5	123
Village 6	81	129	5	215
TOTAL	220	250	32	502

	1990			
VISACA	MALE	FEMALE	KAFO	TOTAL
Village 1	37	31	3	71
Village 2	0	0	0	0
Village 3	39	12	21	72
Village 4	66	83	4	153
Village 5	133	132	5	270
Village 6	83	134	6	225
TOTAL	360	392	39	791

	1991			
VISACA	MALE	FEMALE	KAFO	TOTAL
Village 1	73	61	4	138
Village 2	68	82	8	158
Village 3	51	17	21	89
Village 4	106	102	8	216
Village 5	179	265	7	451
Village 6	97	149	7	253
TOTAL	574	676	55	1305

	1992			
VISACA	MALE	FEMALE	KAFO	TOTAL
Village 1	77	62	4	143
Village 2	95	106	9	210
Village 3	52	17	21	90
Village 4	112	106	8	226
Village 5	179	269	7	455
Village 6	97	156	7	260
TOTAL	612	716	56	1384

Source: VISACA files.

Table V-2 **Annual Profile of End of Year Total Membership for all VISACAs from December 1988 to March 1992.**

	1988	1989	1990	1991	March 1992	Growth Multiple[1]
	(1)	(2)	(3)	(4)	(5)	(6)
Village 1	0	17	71	138	143	8.4
Village 2	0	0	0	158	210	-
Village 3	40	64	72	89	90	1.4
Village 4	0	83	153	216	226	2.7
Village 5	0	123	270	451	455	3.7
Village 6	152	215	225	253	260	1.2
Total	192	502	791	1305	1384	2.8
Percent Change	-	161.5	57.6	65.0	6.1	_

Source: Table III-1.
Note 1: The growth multiple was calculated as the ratio of column 5/column 2.

Figure V-1
Individual and Group (Kafo) Membership Evolution by Gender from 1988 to March 1992

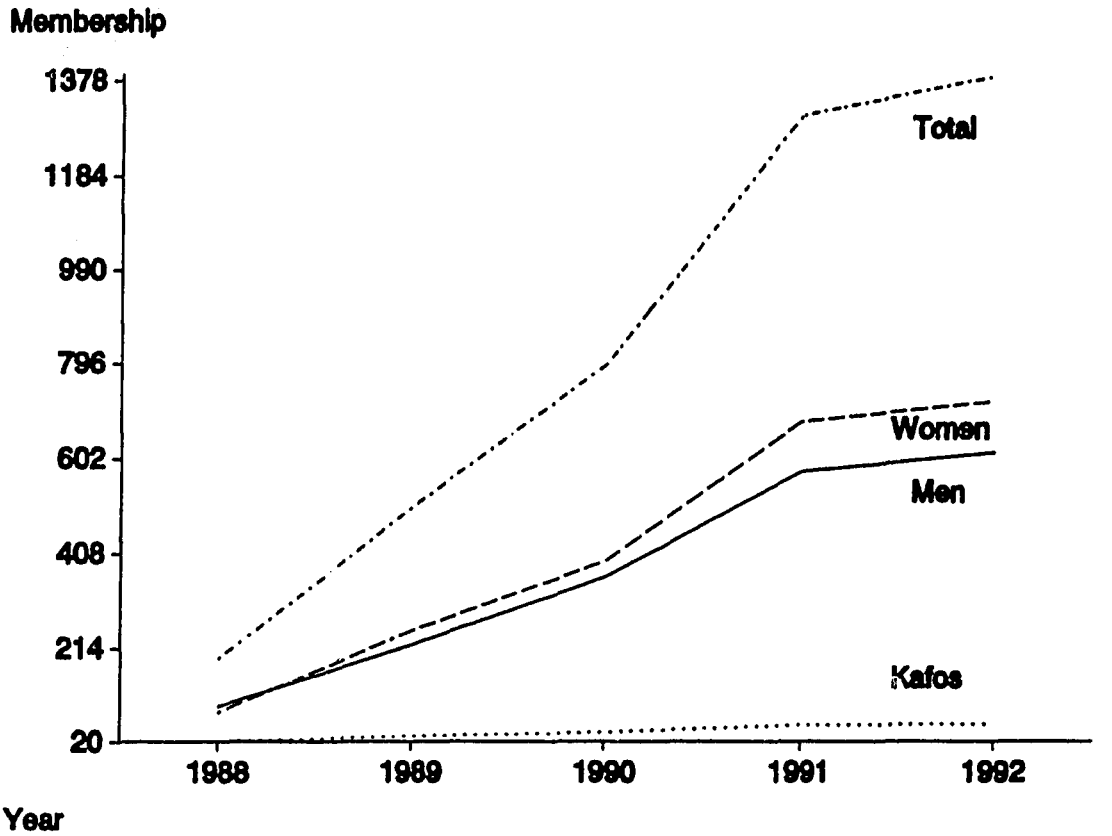

Source: Table V-1.

Table V-3 Share of VISACA's Membership in Overall Village Population as of December 1991.

VISACA	Village Population	VISACA Membership	% VISACA Membership
	(1)	(2)	(3)
Village 1	491	138	28.1
Village 2	443	158	35.7
Village 3	547	89	16.4
Village 4	413	216	52.3
Village 5	1683	451	26.8
Village 6	897	253	28.2
Total	4056	1305	32.2

Source: Data on village population were obtained from a CIDR report.

Table V-4 **Female Participation in the VISACAs' Cumulative Membership as of March 1992 and Growth Multiples for Male and Female Members from December 1989 to March 1992.**

VISACA	March 1992 Total Membership	March 1992 % Female	Growth Multiple[1] (March 1992/December 1989) Male	Female
	(1)	(2)	(3)	(4)
Village 1	143	43.4	5.5	31.0
Village 2	210	50.5	-	-
Village 3	90	18.9	1.5	1.7
Village 4	226	47.0	3.3	2.2
Village 5	455	59.1	3.1	4.4
Village 6	253	60.0	1.2	1.2
TOTAL	1384	51.7	2.8	2.9

Source: Table V-1.
Note [1]: The growth multiples are the ratio of total membership as of March 1992 to membership as of December 1989.

Figure V-2
Relative Size of Membership by Gender in all VISACAs
as of March 1992

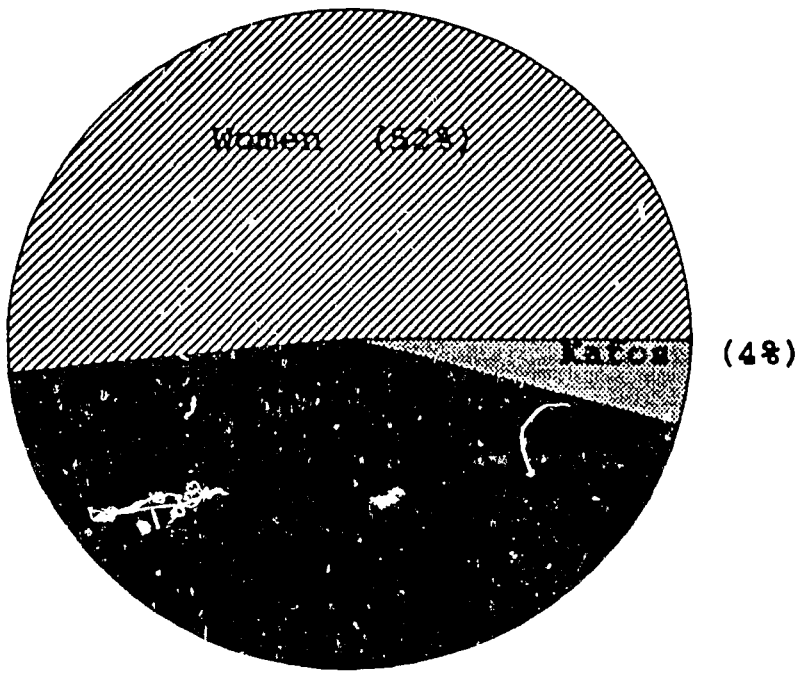

Source: Tables V-1 and V-3.

Table V-5 Number of Deposit Accounts and Percent of Membership as Depositors for the Four Principal Deposit Accounts by VISACA, December 1991.

VISACA	Number of Accounts and Percent Membership Holding These Accounts							
	Current Account	% Membership	3 months Deposit Account[1]	% Membership	6 months Deposit Accounts[1]	% Membership	9 months Deposit Account[1]	% Membership
	(1)	(2)	(3)	(4)	(5)	(6)	(7)	(8)
Village 1	16	11.6	27	19.6	4	2.9	1	0.7
Village 2	15	9.5	17	10.8	6	3.2	0	0.0
Village 3	0	0.0	17	19.1	17	19.1	6	6.7
Village 4	23	10.6	45	20.8	145	67.1	28	13.0
Village 5	11	2.4	22	4.9	69	15.3	63	14.0
Village 6	14	5.5	65	25.7	65	25.7	22	8.7
TOTAL	79	6.1	193	14.8	306	23.4	120	9.2

Source: VISACA files.
Note 1: The interest rate paid on all deposits was 20 percent in 4 VISACAs and 40% in 2 VISACAs.

Table V-6 **Volume of Deposits (in Dalasis) Accumulated Through Time from the Inception of Each VISACA to December 1991 in the Four Principal Deposit Accounts by VISACA.**

VISACA	Deposit Accounts[1]				
	Current Account	3 Month Deposit	6 Month Deposit	9 Month Deposit	Total Deposit
	(1)	(2)	(3)	(4)	(5)
Village 1	14,765	40,141	3,200	5,000	63,106
Village 2	4,312	5,335	2,700	0	12,347
Village 3	0	2,787	2,585	7,435	12,807
Village 4	29,048	17,360	48,338	15,625	110,371
Village 5	14,471	7,065	25,216	38,532	85,284
Village 6	32,999	19,913	52,921	9,945	115,778
TOTAL	95,595	92,601	134,960	76,537	399,693

Source: VISACA files.
Note 1: The annual interest rate on term deposits were 20% and 40% depending on the VISACA.

Table V-7 **Relative Importance of the Volume of Deposits in the Four Principal Deposit Accounts Accumulated Through Time from the Inception of Each VISACA to December 1991 by VISACA.**

VISACA	Volume of Deposits (%)				
	Current Account	3 Month Deposit	6 Month Deposit	9 Month Deposit	Total
	(1)	(2)	(3)	(4)	(5)
Village 1	23.4	63.6	5.1	7.9	100.0
Village 2	34.9	43.2	21.9	0.0	100.0
Village 3	0.0	21.8	20.2	58.1	100.0
Village 4	26.3	15.7	43.8	14.2	100.0
Village 5	17.0	8.3	29.6	45.2	100.0
Village 6	28.5	17.2	45.7	8.6	100.0
TOTAL	23.9	23.2	33.8	19.1	100.0

Source: Table V-6.

Table V-8 **Outstanding Balances for all VISACAs Combined by the Four Principal Deposit Accounts, from 1988 to 1991.**

Year	Current Accounts			3 month term deposits			6 month term deposits		
	#	Amount	Average Balance[1]	#	Amount	Average Balance[1]	#	Amount	Average Balance[1]
	(1)	(2)	(3)	(4)	(5)	(6)	(7)	(8)	(9)
1988	0	0	0.0	4	5,780	1,445.0	0	0	0.0
1989	1	1,502	1,502.0	18	1,395	77.5	11	11,155	1,014.1
1990	18	2,040	113.3	38	12,345	324.9	102	40,774	399.7
1991	43	117,511	2,732.8	19	4,142	218.0	127	42,948	338.2
Total Balance	62	15,293	246.7	79	23,662	299.5	240	94,877	395.3
Growth Multiple[2]	43	7.8		1.1	3.0		11.5	3.9	

Year	9 month term deposits			Total		
	#	Amount	Average Balance[1]	#	Amount	Average Balance[1]
	(10)	(11)	(12)	(13)	(14)	(15)
1988	0	0	0.0	4	5,780	1,445.0
1989	15	11,720	781.3	45	25,772	572.7
1990	34	14,623	430.1	192	69,782	363.4
1991	55	27,831	506.0	244	86,672	355.2
Total Balance	104	54,174	520.9	485	188,006	387.6
Growth Multiple[2]	3.7	2.4		5.4	3.4	

Note 1: Average is obtained by dividing total volume by the number of accounts.
2: Growth multiple is obtained by dividing total balance in 1991 by total balance in 1989.

Table V-9 **Volume of Outstanding Deposit Balances for All Four Deposit Accounts by VISACA from 1988 to December 1991.**

VISACA	1988 Outstanding Deposits	1989 Outstanding Deposits	1990 Outstanding Deposits	1991 Outstanding Deposits	Total Outstanding Deposits	% Total
	(1)	(2)	(3)	(4)	(5)	(6)
Village 1	0	0	1270	6291	7561	4.0
Village 2	0	0	0	6670	6670	3.5
Village 3	250	570	1180	1935	3935	2.1
Village 4	0	5920	30840	35415	72175	38.4
Village 5	0	10417	17786	16715	44918	23.9
Village 6	5530	8865	18706	19646	52747	28.1
Total	5780	25772	69782	86672	188006	100.0

Source: VISACA files.

295

Figure V-3
Share of Cumulative Outstanding Deposit Balances for 1988 through December 1991.

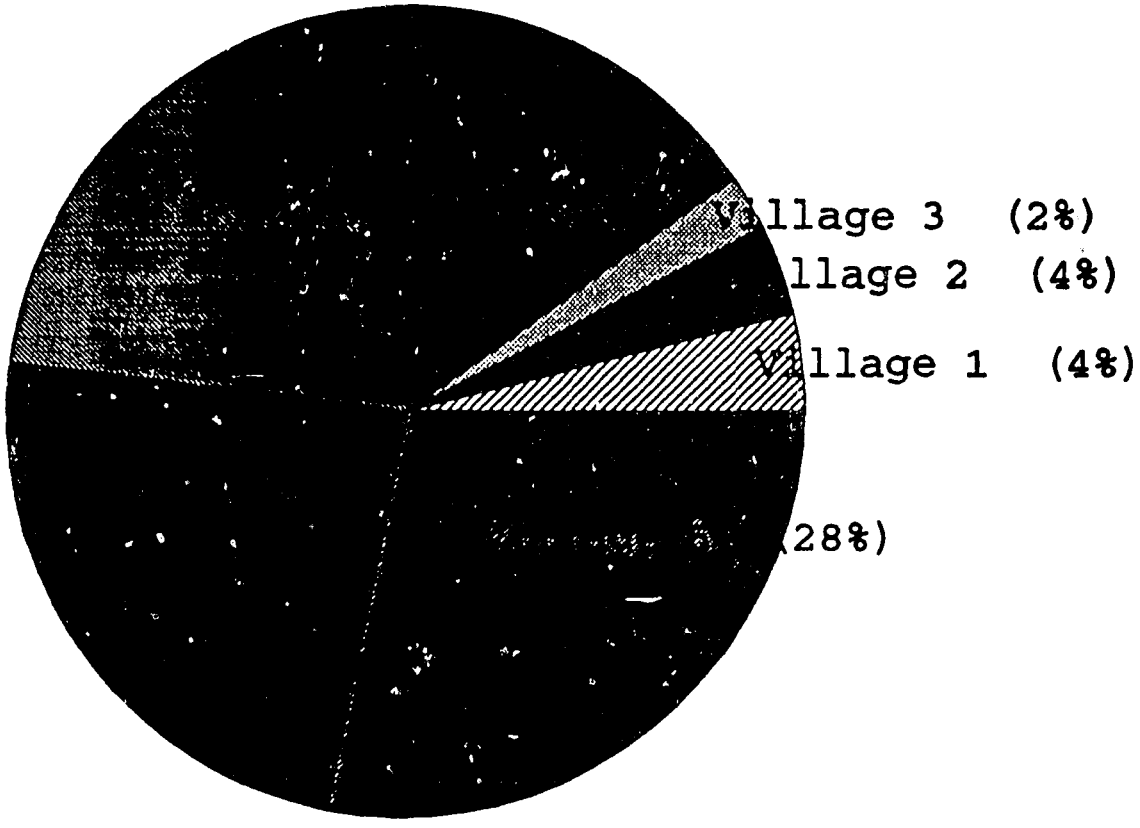

Table V-10 **Total Value of Loans Issued, Average Loan Size in Dalasis, and Term Maturity (in Days) by VISACA from 1989 to 1991.**

VISACA	1989		1990		1991		Total	
	No. of Loans	Total Value	No. of Loans	Total Value	No. of Loans	Total Value	No. of Loans	Total Value
	(1)	(2)	(3)	(4)	(5)	(6)	(7)	(8)
Village 1[1]	0	0	33	18,540	87	25,986	120	44,526
Village 2[2]	-	-	-	0	29	2760	29	2,760
Village 3	11	2770	7	1400	32	8930	50	13,100
Village 4	62	4810	193	44,290	151	52,013	406	101,113
Village 5	52	9320	101	29,980	234	70,050	387	109,350
Village 6	84	21,545	93	30,405	97	43,910	274	95,860
Total	209	38,445	427	124,615	630	203,649	1,266	366,709

VISACA	Average Loan Size (in Dalasis)[3]				Average Term (in days)[4]			
	1989 Average Loan Size	1990 Average Loan Size	1991 Average Loan Size	Total Ave. Size	1989 Average Term	1990 Average Term	1991 Average Term	Total Ave. Term
	(9)	(10)	(11)	(12)	(13)	(14)	(15)	(16)
Village 1[1]	-	562	299	371	-	85	157	137
Village 2[2]	-	-	95	95	-	-	121	121
Village 3	252	200	279	262	87	139	195	163
Village 4	78	229	344	249	109	134	170	145
Village 5	179	297	299	283	167	152	207	187
Village 6	256	327	453	350	129	151	138	140
All VISACAs	184	292	323	290	131	138	176	156

Source: VISACA files.

Note 1: No loans were granted in 1989 in Village 1.

2: Village 2 was not yet in operation in 1989 and 1990.

3: Average loan size is obtained by dividing amount of loans issued by the number of loans issued.

4: Average term is obtained by dividing total number of days associated with all loans issued by the total number of loans issued.

Table V-11 **Selected Indicators of Women's Access to VISACA Loans from 1989 through 1991 by VISACA.**

VISACA	Membership	Female Members	# of Loans Issued	% of members with loans	# of Females who received a loan	% of Female members who received a loan (col 5/col 2)	% of Loans that went to Women (col 5/col 3)
	(1)	(2)	(3)	(4)	(5)	(6)	(7)
				1991			
Village 1	138	61	87	63.0	39	63.9	44.8
Village 2	158	82	29	18.4	17	20.7	58.6
Village 3	89	17	32	36.0	14	82.4	43.8
Village 4	216	102	151	69.9	77	75.5	51.0
Village 5	451	265	234	51.9	125	47.2	53.4
Village 6	253	149	97	38.3	59	39.6	60.8
TOTAL	1305	676	630	48.3	331	49.0	52.5
				1990			
Village 1	71	31	33	46.5	14	45.2	42.4
Village 2	-	-	-	-	-	-	-
Village 3	72	12	7	9.7	1	8.3	14.3
Village 4	153	83	193	126.1	106	127.7	54.9
Village 5	270	132	101	37.4	47	35.6	46.5
Village 6	225	134	93	41.3	54	40.3	58.1
TOTAL	791	392	427	54.0	222	56.6	52.0
				1989			
Village 1	17	2	0	0.0	0	0	0.0
Village 2	-	-	-	-	-	-	-
Village 3	64	10	11	17.2	2	20.0	18.2
Village 4	83	48	62	74.7	34	70.8	54.8
Village 5	123	61	52	42.3	28	45.9	53.8
Village 6	215	129	84	39.1	42	32.6	50.0
TOTAL	502	250	209	41.6	106	42.4	50.7

Source: VISACA Files.

Table V-12 **Documentation of Loan Recovery by Number of Loans and by Volume of Loans by VISACA for all Loans Issued from 1989 Onwards and Due for Repayment through December 1992.**

VISACA	Total Loans Issued as of December 1991		Total Loans Issued and Due by December 1991		Loans Due and Repaid by December 1991		Recovery Rate for Loans in %	
	No.	Amount	No.	Amount	No.	Amount	No.	Balances
	(1)	(2)	(3)	(4)	(5)	(6)	(7)	(8)
Village 1	120	44,526	72	37,470	70	36,340	97.2	97.0
Village 2	29	2,760	0	0	0	0	-	-
Village 3[1]	50	13,100	48	13,035	-	-	-	-
Village 4	406	101,113	324	72,398	307	67,388	94.8	93.1
Village 5	387	109,350	250	72,775	226	66,975	90.4	92.0
Village 6	274	95,860	260	88,295	252	85,945	96.9	97.3
Total	1,266	366,709	954	283,973	855	256,648	94.4	94.7

Source: VISACA files.
Note 1: No information was available on Village 3 loan repayment.

Table V-13 **Basic Documentation of Time Profile of Loan Repayments in Terms of Number of Loans and Rates of Repayment for Total Number of Loans Issued and Due for Repayment from January 1st 1989 Through December 31st 1991 by VISACA.**

Indicator/Schedule	Village 1	Village 2	Village 3	Village 4	Village 5	Village 6	Total
	(1)	(2)	(3)	(4)	(5)	(6)	(7)
A. Number of Loans							
1. Loans due	72	0	-	324	250	260	906
2. Repaid on time	21	-	-	18	8	17	64
3. Repaid ahead of time	19	-	-	87	102	65	273
4. Repaid but less than a month late	25	-	-	132	67	103	327
5. Repaid but 1 to 3 months late	5	-	-	61	30	46	142
6. Repaid but more than 3 months late	0	-	-	9	10	20	39
7. Undetermined length[1]	0	-	-	0	9	1	10
B. Rates of Loan Repayment by Time Profile of Repayments							
1. Prompt recovery rate (%)[2]	29.2	-	-	5.6	3.2	6.5	7.1
2. Early recovery rate (%)[3]	26.4	-	-	26.9	40.8	25.0	30.1
3. Less than a month arrears rate (%)[4]	34.7	-	-	40.7	26.8	39.6	36.1
4. One to 3 months arrears rate (%)[4]	6.9	-	-	18.8	12.0	17.7	15.7
5. More than 3 months arrears rate (%)[4]	0.0	-	-	2.8	4.0	7.7	4.3
6. Undetermined length recovery rate	0.0	-	-	0.0	3.6	0.4	1.1
7. Total recovery rate (%)[5]	97.2			94.8	90.4	96.6	94.4

Note 1: Undetermined length refers to loans with no due date listed in VISACA files.

2: Prompt recovery rate was obtained by dividing the number of loans repaid on time in line 2, panel A, by the number of loans due in line 1, panel A.

3: Early recovery rate was obtained by dividing the number of loans repaid ahead of time (line 3, panel A) by the total loans due (line 1, panel A).

4: Recovery rates for less than one month in arrears, from one to three months in arrears, etc. is based on the number of loans finally repaid during these specified periods (lines 4, 5, and 6 in panel A) over the number of loans due (line 1).

5: Total recovery rate (line 7, panel B) is derived by adding up all the recovery rates estimated in lines 1-6, panel B.

Table V-14 Annual Rate of Return for the VISACA Portfolio by VISACA for the Calendar Year 1991.

VISACA	Average Monthly Loan Balance (in Dalasis)	Average Monthly Interest Earnings[2] (in Dalasis)	Monthly Rate of Return[3]	Yearly Rate of Return[4]
	(1)	(2)	(3)	(4)
Village 1	8,038.0	149.1	1.9%	22.3%
Village 2[1]	-	-	-	-
Village 3	5,217.5	174.8	3.4%	40.8%
Village 4	29,273.8	632.3	2.2%	26.4%
Village 5	38,000.4	775.6	2.0%	24.5%
Village 6	19,665.8	450.3	2.3%	27.5%
All VISACAs	100,195.5	2,182.1	2.2%	26.4%

Source: VISACA files.
Note 1: None of the Village 2 loans were due in 1991.
2: Average monthly interest earnings is the sum of monthly interest payments divided by 12.
3: Monthly rate of return is column (2)/column (1).
4: Yearly rate of return is column (3)*12.

CHAPTER SIX

ALTERNATIVE FINANCIAL NETWORKS: THE SMALL SCALE ENTERPRISE SECTOR IN THE GAMBIA

by

Mayada Baydas

Douglas H. Graham

and

Carlos E. Cuevas

302

Table of Contents

I. INTRODUCTION 1

II. REVIEW OF THE MICROENTERPRISE PROGRAM IN THE GAMBIA: INDIGENOUS BUSINESS ADVISORY SERVICE (IBAS) 2

1. Institutional Background 2
   A. Structure of the Institution 2
   B. Administration Procedures 2

2. Current Portfolio 3
   A. The Overall Portfolio 3
   B. Characteristics of the Three Funding Schemes 3
      a.) Loan Size 4
      b.) Terms and Conditions 4
      c.) Gender Composition 5
      d.) Sectoral Distribution 5

3. Performance of the Current Portfolio 6
   A. The Amounts of Arrears 6
   B. The Loan Repayment Model 6

4. Institutional Performance 8

III. CHARACTERISTICS OF THE MICRO AND SMALL SCALE ENTERPRISE SURVEY 10

1. Purpose of the Study 10

2. Overview of The Survey 11
   A. Economic and Business Characteristics 11
   B. Business History of the Entrepreneur 12
   C. Socio-Economic Characteristics 12

3. Significance of the Existing Financial Channels 13
   A. Initial Capital 13
   B. Sources of Financing Current Operations 14
   C. Saving Channels 15

307

IV. LESSONS AND CONCLUSIONS 16

1. Summary of IBAS Program 16

2. Critiques and Recommendations 17
   A. New Information System 17
   B. Cost Effectiveness of the Program 18
   C. One Time Only Loan Practice 18

3. Summary of OSU Small Scale Enterprise Survey 19

REFERENCES 21

List of Tables

Table VI-1 Financial Indicators and Related Characteristics of the Indigenous Business Advisory Service (IBAS) Portfolio by Program Funding Source as of June 1991. 23
Table VI-2 Cumulative Distribution of Loan Amounts Granted by Program Source of Funds as of June 1991. 24
Table VI-3 Selected Characteristics of the Total IBAS Portfolio by Gender. 25
Table VI-4 Sectoral Distribution of Enterprises Serviced by IBAS by Funding Source as of June 1991. 25
Table VI-5 Distribution of Delinquent Loans by Range of Arrears and Program Source of Funding as of June 1991. 26
Table VI-6 Definition of Variables in the Loan Repayment Model. 27
Table VI-7 Regression Coefficients for the Loan Repayment Model. 27
Table VI-8 Economic and Business Characteristics of Sample Firms in the Small Scale Enterprise Survey. 28
Table VI-9 Relevant Business History of Entrepreneurs in the Small Scale Enterprise Survey. 29
Table VI-10 Socio-Economic Characteristics of the Entrepreneurs in the Small Scale Enterprise Survey. 29
Table VI-11 Historical Sources of Capital and Current Funding Sources Reported in the Small Scale Enterprise Survey. 31
Table VI-12 Savings Channels Reported in the Small Scale Enterprise Survey. 32

List of Figures

Figure VI-1 Sources of Financing and Savings Channels Identified in the Small Scale Enterprise Survey 30

304

ACRONYMS USED IN CHAPTER SIX

BICI	Banque International de Commerce et Industrie (International Bank of Commerce and Industry)
EEC	European Economic Community Fund
GCDB	Gambia Commercial and Development Bank
IBAS	Indigenous Business Advisory Service
ILO	International Labour Office
LPO	Local Purchase Order
MEPID	Ministry of Economic Planning and Industrial Development
RoSCAs	Rotating Credit and Savings Associations
SSEs	small scale enterprises
UNCDF	United Nations Capital Development Fund

CHAPTER SIX
ALTERNATIVE FINANCIAL NETWORKS: THE SMALL SCALE ENTERPRISE SECTOR IN THE GAMBIA*

I. INTRODUCTION

This chapter reports on the micro and small scale enterprise sector in The Gambia. Our concern is focused on the sources of the financial services entrepreneurs draw upon in operating their businesses. These channels are comprised of the formal institutions providing services to a limited number of these entrepreneurs and the diverse informal channels servicing a much larger number of this constituency.

In our review, only one microenterprise program currently operates in the country through the Indigenous Business Advisory Service, (IBAS). This program provides training and financial services to microentrepreneurs. Although the World Bank had initiated an enterprise development project in The Gambia in 1988, the funds have not yet been utilized. Loans were to be channeled through banks who would borrow from the enterprise development fund deposited in the Central bank at an interest rate equal to 3 percent below the T-bill rate. Banks would then on-lend at the prevailing market interest rate (currently about 27 percent). The problem with this formula is obvious, with the T-bill rate between 18 and 19 percent banks could access the World Bank enterprise fund only at 15 to 16 percent when regular time deposits were only costing the bank 12 percent. The banks had no interest in accessing a more expensive source of funds for on-lending. As a result, this enterprise development fund has not made any loans in the three year period since its inception.

Consequently, IBAS is the only program in operation which has had made loans to small scale entrepreneurs. The first section of this chapter reviews the progress of this program based on information collected from IBAS' records. The second part of the chapter reports on the findings of OSU's survey of micro and small scale enterprises undertaken in The Gambia in the spring of 1992. The purpose of the survey was to examine the relative importance of diverse formal and informal channels and agents that entrepreneurs draw upon for financial services. The results of this survey will close out our discussion of micro and small scale enterprise finance in The Gambia.

* Special thanks are due to Mr. Benjamin Carr, Ms. Isatou Dea Sawane and Mr. Sherif Connteh who assisted in many ways to make our survey feasible. We would like to thank also Mr. John Sylva and Mr. Pa Mamoudou Cham at IBAS for their time and considerate cooperation in supplying us with the information we needed to analyze IBAS.

506

II. REVIEW OF THE MICROENTERPRISE PROGRAM IN THE GAMBIA: INDIGENOUS BUSINESS ADVISORY SERVICE (IBAS)

1. Institutional Background

The Government of The Gambia set up the Indigenous Business Advisory Service (IBAS) in 1976 under the Ministry of Economic Planning and Industrial Development (MEPID) to assist the microenterprise sector. IBAS continues to be a government department presently under the auspices of the Ministry of Trade, Industry and Employment. The principal function of IBAS is to deal with employment creation and the development of small scale enterprises (SSEs) in The Gambia. This section provides an overview of this program and an assessment of the current portfolio and institutional performance.

A. Structure of the Institution

Services are extended by IBAS to entrepreneurs who operate SSEs and employ five or less employees. IBAS provides advisory and consultancy services, training packages, and financial assistance to small scale entrepreneurs. In addition to the head office in the Kombo area, IBAS operates 4 branch offices located in Farafenni, Bansang, Barra and Basse to service rural areas. Volunteer help from the ILO or the Peace Corps occasionally provides assistance to the current employees which make up a total of 22 professionals and 27 support staff. The program is supported by the government although the intention has been for some time to make IBAS an autonomous institution. Program costs are reportedly 750,000 dalasis on average per year.

The general manager of IBAS reports directly to the permanent secretary of the Ministry of Trade, Industry and Employment, and manages the three main departments at IBAS. These departments are the advisory and extension services unit, training and research unit, and the credit control unit. The advisory and training facilities at IBAS are accessible to all interested SSEs. Last year it was reported that a total of 250 SSEs were trained free of charge at the main offices of IBAS.

B. Administration Procedures

Currently, there are about 600 active member clients registered with IBAS. The majority of these clients are engaged in manufacturing services, retail trade and horticulture produce marketing activities amoung others. Credit services, the principal objective of many members and the concern of most of the staff, are available to all entrepreneurs who take the initiative to request a loan from IBAS. Typically, entrepreneurs fill out loan applications with the credit control officer where loan amounts are often negotiated.

The first step in the loan evaluation procedure is taken by the extension officers who visit the enterprise and assess the potential investment. Second, financial statements, namely an income and cash flow statement, are prepared to project the performance of the enterprise with the new investment plan. Third, the credit control staff review this information and make recommendations to the loan committee. The loan committee members then evaluate the loan proposals and makes the final decision accepting or rejecting the loan request. Loans are given for periods ranging between 2 to 3 years; however, monthly installments are generally due after the first month but in all cases before the end of 3 months of disbursement.

IBAS is currently trying to recover many delinquent and defaulted loans. Thus, in the process of evaluating the performance of the current portfolio and the ability of the program to become viable and self sustaining, the following section will review the characteristics of this portfolio, followed by a detailed analysis of the performance of the portfolio and an assessment of the institution's performance.

2. Current Portfolio

A. The Overall Portfolio

Currently, IBAS administers three financing schemes drawing on three different sources of funds. These funds have been provided by donors and the government as grants and were designed to serve as revolving fund schemes. The two funds which were granted by donors are the European Economic Community (EEC) Fund and the United Nations Capital Development Fund (UNCDF). The third Fund was provided by the government as a Resettlement Program for Retrenched Civil Servants. A total of 4,955,290 dalasis was disbursed from the inception of the program to 1988 under the three schemes. These schemes have serviced a total of 433 borrowers (Table VI-1). The average loan size of the total portfolio is D11,444 and the average term is 27 months given at an average interest rate of 9.7 percent per annum. Some important differences exist, however, among the three sources of funds. Thus, characteristics of these three funding schemes will be discussed next in more detail.

B. Characteristics of the Three Funding Schemes

Table VI-1 presents an overview of some of the representative characteristics which describe the overall portfolio as well as each funding scheme. The EEC revolving fund scheme was initiated in 1986 and by 1988 had disbursed a total of 1,017,297 dalasis to 121 borrowers. The UNCDF revolving fund scheme was initiated in 1985 and by 1988 had disbursed a total of 2,797,204 dalasis to 188 borrowers. The resettlement program for retrenched (i.e. laid-off) civil servants was initiated in 1987 and by 1988 had disbursed a total of 1,140,788 dalasis to 124 borrowers. Although a part of these loans were paid back

into the revolving fund schemes, no new loans have been disbursed within these programs since 1988.

IBAS was maintaining these accounts and working in collaboration with the Gambia Commercial and Development Bank (GCDB) until 1991. The GCDB was in charge of disbursing loans to borrowers based upon the recommendations made by IBAS personnel. It was reported that loans were granted at the set interest rate of about 11 percent per annum, where the bank had a 6 percent share of the interest charge and IBAS 5 percent. Seventy five percent of the loan amount was guaranteed by the government and 25 percent by the bank.

a.) Loan Size

On the one hand, the average loan size under the EEC fund which amounts to D8,407 is much smaller than the D14,878 average loan size under the UNCDF and D9,199 average loan size under the government program. The spectrum of loans given under each source of funds, presented in Table VI-2, provides an additional insight into the differences in loan size and the concentration of small loans under the EEC program versus the UNCDF and the government programs.

First, almost 20 percent of the loans given under the EEC scheme were below D3000, whereas the UNCDF had only 11 percent and the government program had a mere 4 percent of their loans in this category. The EEC loans are basically concentrated in the first 3 categories which cover loans up to D9000; about 12 percent of the loans fall in the range of D9000-12000 and another 12 percent fall in the range of D12000-15000. Only about 6 percent of the EEC loans are above D15,000. The UNCDF loans are largely concentrated in the categories between D3000-12000 with only 1 percent in the range D12000-15000; however, almost 23 percent of the loans fall in the categories above D15,000. The government program loans, on the other hand, are mainly concentrated under 2 categories. First, 37 percent fall in the range of D6000-9000 and 41 percent fall in the range of D9000-12000. About 11 percent of the loans fall below D6000 and another 11 percent fall in the categories D12000-25000. Thus, these different concentrations present large differences between these programs which probably explain in part the different performances of the three funding schemes.

b.) Terms and Conditions

Figures presented in Table VI-1 show that the average interest rates are highest for the EEC loans which amounted to 11.6 percent per annum whereas rates for the UNCDF and the government program loans were respectively 10.5 percent and 6.8 percent per annum. The average interest rate for the overall portfolio is 9.7 percent. This is much less than the market interest rates in The Gambia during this time. These nominal interest rates are effectively negative in real terms because of the inflation rates ruling in The Gambia during the period 1985-1990.

Maturity periods ranged from one to three years. The average maturity period for the overall loans provided by IBAS from 1985 through 1988 is 27 months. However, the average maturity period varies by source of funds. Figures in Table 1 show that the EEC loans have the shortest average maturity of 23 months, followed by UNCDF loans of average maturity of 27 months and, third, the longest maturity of 33 months is given for the government loans.

Almost 80 percent of the total portfolio was concentrated in the greater Banjul area. Personal guarantors were required and served as the typical collateral. Important political figures frequently served as personal guarantors. This feature induced substantial political intervention and probably explains some of the high default rates which will be discussed in a later section.

c.) Gender Composition

The group of borrowers is comprised of 67 percent male and 33 percent female entrepreneurs. However, wide differences exist among the programs. The EEC beneficiaries are made up of roughly 47 percent male and 53 percent female entrepreneurs, the UNCDF includes 64 percent male and 35 percent female entrepreneurs while the government program, reflects a strong male dominance with 91 percent male and 9 percent female entrepreneurs. This no doubt reflects the original gender imbalance in government service. Figures in Table VI-3 indicate a considerably larger average loan size for male borrowers (D13,111) than for female borrowers (D7,789). Larger average loan sizes for male borrowers are also associated with longer average maturity periods of 28 months versus 25 months for female borrowers. Another component associated with larger loans for male borrowers is the larger arrears rate which equals 63 percent for male borrowers and only 27 percent for female borrowers.

d.) Sectoral Distribution

Originally, the UNCDF scheme excluded entrepreneurs operating in retail trade. However, this condition was later changed when it was reported by IBAS officers that there was a high demand for loans by microentrepreneurs operating in this subsector. There were no other conditions imposed by donor targeting criteria. Table VI-4 presents the concentration of beneficiaries in services, manufacturing and agriculture in each program.

Beneficiaries of the EEC program are almost equally divided between services (52 percent) and manufacturing (48 percent). There are no agricultural enterprises under the EEC fund although it was not reported that this sector was explicitly excluded. Beneficiaries under the UNCDF program are concentrated, first, in the manufacturing sector (54 percent), second, in services sector (34 percent) and, third, in agriculture (9 percent). The government program records entrepreneurs operating enterprises mainly in the service sector (54 percent), some in agriculture (29 percent) and only a few enterprises in manufacturing (14 percent).

Sectoral distribution gender composition, terms and conditions, loan size and sources of funds are among the factors which explain the poor repayment performance of the overall portfolio as well as the large differences in repayment rates among the three schemes. These features are explained below.

3. Performance of the Current Portfolio

A. The Amounts of Arrears

Recovery rates registered in the three programs do not indicate a successful performance. The arrears rate for the total portfolio is 44 percent; however, there exist large differences among the three schemes. Figures in Table VI-1 present the amounts and rates of arrears for each program. The highest arrears rate relative to the amounts disbursed are recorded for the government program (76.8 percent), followed by the UNCDF program (37 percent) and, last, for the EEC program (27 percent). Many factors explain this behavior. We will, first, review the arrears distribution in the three programs and, later, examine a model to identify which factors are associated with the arrears rates.

Table VI-5 presents the distribution of loans in arrears associated with each source of funds. The EEC program has the highest percentage (72 percent) of successfully repaid loans, with the UNCDF second (56 percent), and last the government program with a negligible 1 percent. Under the EEC program the concentration of loans in arrears is highest (16 percent) in the first arrears category (D1-3000) with very small percentages of loans in the other larger size categories. The concentration of arrears under the UNCDF program exhibits a somewhat different pattern in that the highest percentage of loans in arrears (19.7 percent) falls in the first size category; however, roughly 25 percent of the loans are still in arrears in amounts above D3000 which are scattered among the rest of the larger loan size categories. Arrears under the government program are concentrated more visibly in the larger loan sizes compared with the other two programs.

B. The Loan Repayment Model

This section analyzes the repayment performance of loans disbursed by IBAS under the three lending programs. These programs constitute the active portfolio of IBAS and the repayment rate as of June 1991 indicates to a large extent the still fragile conditions of the institution. The literature on financial markets has examined loan repayment problems facing many financial institutions. Both loan and borrower characteristics are among the variables that explain these loan repayment rates.

To identify the factors explaining loan repayment rates, a multiple regression model was estimated utilizing the available information on the loan and borrower characteristics. Loan size, interest rate, term maturity, and source of the funds were among the pertinent

information available on loan characteristics. Gender and sector of operation were among the pertinent features of the borrower.

In our analysis, the repayment model is defined as:

$$ARREARATE = a_0 + a_1 LAMT + a_2 IR + a_3 MAT + a_4 GOV + a_5 UNCDF + a_6 GENDER + a_7 AGR \quad (1)$$

with the variables identified in Table VI-6.

Results of the model are presented in Table VI-7. These results were generated using Ordinary Least Squares regression. They indicate a relatively high R-Square and F value. The relationships between the significant explanatory variables and the resulting loan arrears rate are as expected.

The coefficient for the amount of loan granted (LAMT) is positively and significantly associated with the arrears rate. This implies that larger loans are in larger arrears, an unsurprising finding in the typical lending institutions in developing countries where the screening of borrowers is less important than political intrusions to favor larger borrower clientele.

As expected, results show that longer maturity periods (MAT) are associated with larger arrears. Longer maturity periods involve a higher risk of moral hazard problems[1] and, thus, a higher chance of delinquency and default. Higher interest rates (IR) are also associated with higher arrears. Higher interest rates may be charged for riskier borrowers whose investment projects have a higher variance of net returns. However, riskier borrowers may introduce a larger percentage of defaulters because of adverse selection problems[2] where bad borrowers who cannot be distinguished in some cases from good borrowers have a higher probability to default.

Two dummy variables, (GOV) and (UNCDF) were included to determine the variation between the three lending programs. Results show that the coefficient for the government program (GOV) is significant implying that borrowers under this program are associated with higher arrears rate than those under either the UNCDF or the EEC programs.

Gender is not significant; however, this result is not surprising considering the high correlation coefficient between the variable identifying borrowers from the government

---

[1] Moral hazard problems are associated with a borrower's unpredictable action at a later point leading to default which the lender cannot predict.

[2] Adverse selection problems are associated with a borrower's indeterminate type where a lender may select some bad borrowers from a pool of applicants and reject some good borrowers.

3/12

program and male entrepreneurs. Thus, the variable (GOV) is capturing the effect of the large number of male borrowers concentrated under the government program who are in large arrears rate. This relationship is also manifested between the variable (AGR) representing the sector of operation of the entrepreneur and borrowers from the government program who are largely concentrated in agriculture. The coefficient for (AGR) implies that the relationship between sector of operation and the arrears rate is insignificant. These results confirm expectations that larger loans given for longer maturity periods lack adequate screening of borrowers and, thus, are associated with larger arrears.

The institutional viability of the microenterprise program is largely dependent on loan recovery since its survival is linked to a revolving fund in which the only infusion of funds comes from loan repayments. The results reported here are not encouraging concerning the number of times these funds can revolve. One strategy to deal with this would be to charge interest rates that would allow the program to break even. This is explored in the following section reviewing the issue of estimating a risk premium to cover default.

4. Institutional Performance

Any financial institution or program must cover its total lending costs (administrative costs and the costs of funds) plus an allowance for bad debt or non-performing loans. This latter component can be estimated and incorporated into total lending costs through a risk premium for bad debt. Estimates of the risk premium can be derived using the formula below:

$$r = [d/(1-d)] * (1+a+c) \tag{2}$$

where r = risk premium per dalasis lent;
a = per unit administrative costs;
c = per unit cost of funds;
d = proportion of the portfolio in default (unrecoverable loans);

This measures the loss to the institution (program) brought on by the proportion of the portfolio that has fallen into default plus the administrative costs and deposit costs that were incurred in servicing these defaulted loans and are now permanently lost or irrecoverable. The premium that results from this estimation (r) is the rate that must be added to the institutions administrative and deposit costs to generate total lending costs. To highlight this relationship consider total lending costs as:

$$TLC = a + c + r \tag{3}$$

where TLC = total lending costs (per unit of dalasis lent) and a, c and r are as defined above.

The administrative costs at IBAS have been reported to be roughly D750,000 per year. These funds are provided by the government as IBAS is still a government department. We will consider the estimates under the assumption that the bulk of the loans have been disbursed during two years, 1986-87, and considering conservatively that only 25 percent of the material and personnel costs at IBAS reported above were being utilized to support this loan administration process. Thus, the per unit cost of funds (a) comes to 0.076 of the disbursed loan portfolio denoted in Table VI-1. The cost of funds is practically zero since they were given as grants to support microenterprise development. The overall default rate was 44 percent as indicated earlier.

Given these parameters, the risk premium is estimated to be 84 percent and total lending costs per dalasis lent is estimated to be 92 percent.[3] Admittedly no program would be able to charge an interest rate of 92 percent in The Gambia today. But the exercise above nevertheless serves a useful purpose by underscoring the severe financial consequences of a program whose default rate is 44 percent. Put differently, the interest rates charged (from 7 to 12 percent) were little more than a token gesture to price loans and come nowhere close to covering the losses incurred through default loans. The default rate that would be consistent with a 12 percent total lending costs needs to be only about 4 percent for the program to break even.[4] Thus with the current performance there is no way the program could become viable. A large permanent subsidy is necessary for the program to function.

Recent reforms, initiated in early 1992, were designed to reduce the deficiencies of the program. These allow IBAS to take over the loan administration of the revolving funds still available to the program through the loan recovery from past clients who honored their loan repayment obligation. Under these new reforms, loans are disbursed through the Banque International de Commerce et Industrie (BICI) rather than the GCDB (which has now terminated operations). The new loans are issued at a current interest rate of 14 percent per annum, and IBAS is totally responsible for loan recovery. Average loan size is set at about 10,000 Dalasis given for a period of 2 to 3 years. Political guarantors have been eliminated and the new system legally obliges guarantors to pay off the borrower's debt in case of default. A precondition for loan approval is a signed contract which allows IBAS access to the guarantor's bank account in case of default. Disbursements are made by issuing a Local Purchase Order (LPO) to obtain input materials upon which IBAS makes a payment to the local supplier rather than disbursing cash directly to the borrowers.

This new approach seems to have more strict requirements in order to discourage default. Recent progress has been made in collecting on delinquency in courts. Loans of

---

[3] The estimation is as follows: $a=0.076$; $c=0$; $d=0.44$; so that $r=[0.44/0.56]*[1.076]=0.84$ and total lending costs on a per unit basis is $TLC=(0.076)+(0)+(0.84)=0.92$.

[4] The estimation of the default rate d is carried out by using the formulas for risk premium (r) and total lending cost (TLC). Give $TLC=0.12$; $a=0.076$; $c=0$ implies $0.044=[d/1-d](1+0.075+c)$; so that $d=0.039$.

D 20,000 or less can be handled now in the magistery court where foreclosure on default loans is faster than in the supreme court. This should expedite proceedings against defaulting borrowers. Without a substantial breakthrough dramatically reducing default the program will quickly expire. However, discouraging default, though strategic for survival, is only part of the problem. The administrative costs are still covered by the government, interest rates are below market rates and the remaining revolving funds that IBAS is administering have already eroded rapidly in volume because of the lamentable past repayment experience described above. In order to maintain its lending capacity, IBAS needs to be charging interest rates that not only should be positive in real terms to counter the eroding effect of inflation, but also high enough at least up to market rates to offset or reduce to some extent the losses inevitably associated with subsidized and targeted credit programs (i.e. poor loan recovery). Finally, administrative costs need to be reduced and organized to create a more cost efficient operation. It is true that IBAS has been designed to be a development and promotional program for microenterprises, however, in our previous calculations we have taken this into account by allocating only 25 percent of the overhead costs to the loan program and 75 percent to the development and promotional mission of IBAS. We feel that the agency could be more cost effective in its loan operation than it has been to date. To facilitate this, IBAS should be taken out from the main line ministry where it is currently operating, given a more autonomous state and the right to hire, and fire and reassign personnel outside the civil servants rules. This added flexibility should prove more cost effective.

However, this microenterprise program is only one channel serving the financial demands of micro and small scale enterprises in The Gambia. Entrepreneurs have found other channels to meet a part of their demand for financial services. These channels are the focus of the following section which reports on the OSU small scale enterprise survey undertaken in the spring of 1992.

III. CHARACTERISTICS OF THE MICRO AND SMALL SCALE ENTERPRISE SURVEY

1. Purpose of the Study

The OSU small scale enterprise survey was undertaken in the manufacturing sector for three reasons. First, little is known about the characteristics of the small scale enterprise sector in The Gambia. Second, much less is known about the operations of small scale enterprises, and their contracts with suppliers and customers. Last, practically nothing is known about the sources of finance, and the financial contracts small scale entrepreneurs typically draw upon. Thus, this small scale enterprise survey was initiated to explore these issues and provide some answers to yet pending research questions regarding the financial transactions of small scale enterprises.

2. Overview of The Survey

A survey of 153 small scale manufacturing enterprises was carried out by the OSU team of researchers in March and April of 1992. The surveyed enterprises were randomly selected in the greater Banjul area. This area includes the capital, Banjul, and the surrounding suburbs, the Kombos. This dynamic urban area was chosen because it is the only setting in the country in which one finds a large and diverse number of manufacturing enterprises that could provide information about the issues in question.

The following sections present an empirical profile of selected characteristics of these enterprises. These include first economic and business characteristics of the small scale enterprise sample. Second, the relevant business history of the entrepreneurs in the sample is documented along with relevant socio-economic data on the entrepreneurs in the sample. This description concludes with a brief discussion of the sources of funds and saving channels reported by the entrepreneurs.

A. Economic and Business Characteristics

The enterprise survey covered four subsectors in the manufacturing sector. These consisted of bakeries, both traditional and modern, metal workshops, tailoring workshops and tie-dye producers. Roughly, 40 enterprises were surveyed in each subsector. Table VI-8 provides the breakdown of the share of the number of enterprises in each subsector in the sample. Figures in table VI-8 also show that these enterprises are operated similarly by owners (84 percent). Few enterprises are operated by managers (4 percent) and even fewer (12 percent) are rented by entrepreneurs who pay their landlords a fixed rent per month.

The average value of physical assets was D128,727. This value, however, varies especially by subsector. Modern bakeries have electrical equipment and ovens, where the average value of physical assets is D1,387,238. On the other hand, traditional bakeries, rely on manual mixing and clay ovens for baking purposes with the average value of their physical assets only reaching D4 306. Tailor workshops have electrical and manual machinery with an average value of physical assets equal to D32,638. Metal workshops also have electrical and manual machinery where the value of the machinery is somewhat less expensive as the average value of physical assets is only D9,186. However, tie-dye producers need only some basic tools for their production process and the calculated average value of these tools equaled the lowest level of all the subsectors, only D626.

The average number of employees in the surveyed enterprises was 5 persons; however, the range of employees was from 1 to 26 workers. Thus, the sample includes micro, small and a few medium scale enterprises. Some enterprises have been in business for as long as 30 years and others have been in operation for only a year. The average business has been in operation for 10 years and the average business experience for an entrepreneur before starting her/his business was 5 years.

B. Business History of the Entrepreneur

Small scale enterprises frequently have been characterized as consisting of many unemployed workers who operate mostly in the informal sector. In our sample, however, Table VI-9 indicates that 78 percent of the enterprises are registered with the area or city council, a government department that grants entrepreneurs licenses to operate their businesses. Roughly half of the interviewed entrepreneurs (51 percent) were employees before they decided to start their own businesses. Another 33 percent were already involved in another private business and 16 percent started by working in the same line of business.

Most entrepreneurs have started their own businesses (83 percent). A large share of those entrepreneurs who are operating existing businesses (17 percent) are either renting them, as pointed out earlier, or they have inherited the business. Interestingly, a small group of entrepreneurs (23 percent) operate a secondary business or hold a job at the same time as they run their enterprise. When asked about the reason they started their business, almost half (45 percent) responded that they wanted to become self-employed (Table VI-9). Roughly, one fourth (26 percent) have inherited the family business; physical assets, and most indicated they also inherited the line of business. A very small share of the entrepreneurs (4 percent) reported that they started the business because they perceived a good opportunity in operating an enterprise in their subsector of activity. Finally, only a small percentage of the entrepreneurs (8 percent) reported that there was no other work available.

C. Socio-Economic Characteristics

The socio-economic characteristics of the entrepreneurs recorded in the survey are gender, marital status, educational level, age and household size (Table VI-10). The gender composition of the sample is 29 percent female and 71 percent male entrepreneurs. However, like other characteristics of the enterprise, these percentages vary by subsector. The two subsectors of bakeries and metal workshops are absolutely dominated by men, which is not surprising in this typically traditional society. However, the two other subsectors of tailoring and tie-dye work have a mix of female and male entrepreneurs. The tailoring workshops were 58 percent female operated and 42 percent male operated enterprises. The tie-dye producers were 57 percent female and 43 percent entrepreneurs.

Interestingly, even married entrepreneurs keep separate accounts from their spouse's accounts in The Gambia, like most other countries in Africa. In the sample, 83 percent of the entrepreneurs are married and 17 percent either single or divorced. The average age of the entrepreneur is 38 years and the average household size the entrepreneur is responsible for is 10 members. The lack of adequate education is evident in the sample in that only 14 percent of the entrepreneurs have completed their high school education, 27 percent have had some schooling, and 59 percent are illiterate.

3. Significance of the Existing Financial Channels

The sources of finance and savings channels entrepreneurs draw upon are various. They fall into informal and formal spheres. The informal channels that were found to prevail in The Gambia include family, friends, suppliers credit, customer advances, Osusu groups (Rotating Credit and Savings Associations, or RoSCAs), and moneykeepers. The formal channels include commercial banks and the IBAS microenterprise program. Figure VI-1 presents a comprehensive diagram of these channels summarizing the key findings that will be discussed in more detailed tables through the succeeding sections. Compared to the wide array of informal financial channels, the formal channels seem rather scant and limited in the role they have played as financial intermediaries.

We first look at the source of initial capital. Second, we documented those sources financing current operations. Sources of financing, like other characteristics, vary by subsector of operation. Tables VI-11 and VI-12 conclude our discussion by presenting the sources of funds and savings channels by subsector of operation.

A. Initial Capital

Initial capital was provided from personal savings for most entrepreneurs (92.1) operating metal workshops (Table VI-11). Only a small share (7.9 percent) reported taking a loan from family members. In contrast, only 15.4 percent of the modern bakeries were launched from personal savings. The large majority of the entrepreneurs operating modern bakeries (76.9 percent) reported using formal loans to initiate their businesses. However, these loans were granted by their foreign suppliers who provided the equipment through offshore financing arrangements and the bakers acquired access to local bank guarantees in order to repay their loans in installments.

On the other hand, 69 percent of the traditional bakers initiated their businesses as an investment from personal savings. A small share (11.5 percent) reported using family sources to get established and another 19.2 percent reported using supplier credit for the purchase of input materials to start their businesses.

Tailoring workshops and tie-dye producers exhibit a similar trend in acquiring their initial capital. Roughly half of each group (48 percent in the case of tailoring and 55 percent in the case of tie-dye) started their business with personal savings. Roughly, one fourth reported using family funds (34 percent and 27 percent respectively), a few reported taking loans from friends (5.6 percent and 2.5 percent respectively) and less than a handful in each subsector (2.8 percent and 2.5 percent respectively) acquired a formal loan. Some tie-dye entrepreneurs started with some assistance from their suppliers where 12.5 percent accounted for supplier credit as a source of financing to start the business.

318

These statistics indicate, first, the heavy reliance on personal savings as a source of financing to start business ventures by the majority of the small scale entrepreneurs (65 percent) in all four subsectors. Second, loans from family members contribute 25 percent of the initial start-up capital while loans from suppliers only amount to 3 percent. Last, formal loans constitute a mere 7 percent in which more than half was acquired from offshore financial institutions and suppliers for initial capital.

B. Sources of Financing Current Operations

Sources of finance for the current operations include both informal and formal channels, although, again they are concentrated on the informal side. First, all entrepreneurs (100 percent) operating in the four subsectors reported that they use retained earnings as a source of financing for their current operations (Table VI-11).

Second, about 57 percent of the entrepreneurs in the four subsectors reported that they draw upon informal sources of finance from other enterprises, or family and friends in their current operations. A more detailed break-up of the shares of entrepreneurs borrowing from each particular source, and lending these sources, is presented in figure VI-1. The informal sources are more significant in the case of the tie-dye producers which is relatively less profitable than the other activities surveyed. A large share of the entrepreneurs in this subsector (85 percent) borrow on an informal basis for their businesses. Traditional bakers (69 percent) and entrepreneurs operating metal workshops (68 percent) draw upon informal sources for small and short term loans in their current operations. This source may not be as important in the case of tailoring and modern bakeries; however, it is still significant. Roughly half of the entrepreneurs in each of these two subsectors (54 percent of the modern bakeries and 50 percent of the tailoring) reported using informal sources of financing in their current operation.

Third, 62 percent of the entrepreneurs in the total sample reported using customer advances to finance their business operations. This channel of financing is very significant in tailoring and metal workshops. Customer advances were a source of financing for 97 percent of the entrepreneurs operating metal workshops and for 92 percent of the entrepreneurs operating tailoring workshops. Roughly half of the tie-dye producers received customer advances to finance their production. None of the bakers, neither modern nor traditional, reported drawing on customer advances for financing their operations. However, entrepreneurs in this subsector draw on other sources as will be revealed below.

Fourth, supplier credit is evidently an important source of financing for some entrepreneurs. It was reported to be used by 32 percent of the total sample. It stands out in the case of bakeries, both modern and traditional where 85 percent and 81 percent of the bakers respectively reported frequent use of this source of finance in purchasing their input materials. A limited number of tailors and tie-dye producers reported using supplier credit (22 percent of the tailoring workshops and 27 percent of the tie-dye producers, see Figure VI-1 and Table VI-11). In the case of metal workshops, supplier credit is non-existent. This

may be explained by a lack of competition in the case of steel suppliers whereas in the case of flour suppliers there are many importers and wholesalers who use credit as a marketing facility to gain a competitive edge on their rivals.

Fifth, and last, a total of 23 percent of the interviewed entrepreneurs have acquired formal finance for the purpose of operating their businesses. Subsector differences indicate that formal loans are significant in the case of the modern bakeries and much less significant in the other subsectors. A large share of the modern bakers (69 percent) reported acquiring formal loans in their business, whereas none of the traditional bakers did. Few of the entrepreneurs operating metal workshops (10 percent) or tie-dye producers (22 percent) have acquired formal loans and about 39 percent of the tailors reported using formal loans in their businesses.

The sources of finance may be characterized in a ranking order starting with the most to the least utilized. First is retained earning as the overwhelming source; second are informal sources from other enterprises, family and friends; third comes customer advances; fourth is supplier credit; and last is formal finance. This preliminary ranking order falls in line with the pecking order theory (Cuevas; Myers).

This theory argues that firms choose to finance investments from internally generated funds first because this represents the safest source of finance (i.e. does not jeopardize their complete control of their business). This implies that external sources of finance come second since this introduces a potential threat to the complete owner control of the business. In case external finance is required, again, the safest sources are drawn upon first, with informal external sources preferred to formal external financing because they do not hold the threat of loosing the enterprise which might be required as collateral for a formal loan. Among informal sources, family, friends and fellow entrepreneurs come first, followed by customers and last of all suppliers. Suppliers frequently are in a position to take serious measures to collect on delinquent loans. This may involve losing a source of input supplies and even control over the firm.

C. Saving Channels

Entrepreneurs save. Even the low-income producers who earn very little nevertheless save sufficient amount of monetary savings to operate their businesses and take care of their household needs. Entrepreneurs in the sample were found to participate in different savings channels. Formal channels consisted of accounts in commercial banks. The informal channels are represented by osusu groups and moneykeepers. Table VI-12 presents the share of entrepreneurs saving with formal institutions, osusu groups and moneykeepers by subsector of operation.

Among the most common saving channels are the commercial banks. Roughly half of the entrepreneurs held at least one account with one of the four commercial banks in the country (Figure VI-1). Not surprisingly, most of the entrepreneurs operating modern baker-

ies (90.9 percent) held accounts with formal institutions. About 86 percent of the tailors and 50 percent of the metal workers held deposits with these institutions. Roughly 35 percent of the tie-dye producers also held accounts with formal institutions; however, none of the entrepreneurs operating traditional bakeries held an account with commercial banks.

Osusu groups are the second most widely used saving channel among the entrepreneurs in the sample. About 30 percent of the entrepreneurs reported participating in osusu groups (Figure VI-1). The concentration of osusu groups is largely in the traditionally female dominated professions of tailoring and tie-dye work. These groups are very rare among the male dominated professions of metal working and bakeries. Only a handful of entrepreneurs in these two latter subsectors participate in osusu groups, whereas roughly half the entrepreneurs in the two former subsectors (44 percent in tailoring and 65 percent in the tie-dye area) participate in these groups. This is further evidence that women in Africa more commonly function in groups (Osusus and Kafos) than do men. No doubt this reflects their more precarious economic position and the likelihood that a group of similarly situated female colleagues offers them a better opportunity to cope with cash flow and related financial problems. Men, on the other hand, apparently feel less need to work or save through such groups.

Moneykeepers are the safe guards of those entrepreneurs who do not keep deposits with formal institutions and do not participate with osusu groups (12 percent of the total sample; Figure VI-1). This trend is evident among the entrepreneurs operating traditional bakeries. Among the traditional bakeries interviewed in the sample, 38 percent keep deposits with moneykeepers. Very few tie-dye producers do so where osusu groups are very active. In the case of entrepreneurs operating modern bakeries and those operating tailoring workshops, who deposit largely with commercial banks, none reported keeping deposits with moneykeepers. Thus, moneykeepers would appear to service the lower income strata in our sample, especially among male entrepreneurs.

In summary, the wide array of savings channels and the different concentrations of entrepreneurs by subsector among these channels indicates a very important finding. Monetary savings are very important to entrepreneurs. Almost every entrepreneur has used at least one savings channel to keep her/his deposits as a means to manage their liquidity.

IV. LESSONS AND CONCLUSIONS

1. Summary of IBAS Program

The IBAS microenterprise program of the mid to late 1980's recorded substantial defaults. As of June 1991, 44 percent of the total portfolio comprised of three separate donor funding sources were in default. Factoring this finding into a risk premium which in

turn was incorporated into total lending costs concludes that the program could only have broken even if it had charged interest rates as high as 92 percent to make up for the default losses. Such a measure was, of course, not feasible, but the dramatic results serve a useful purpose here by highlighting the severe financial shortcomings of the program and that the interest rates charged in the programs were mere token gestures at pricing loans to cover default losses. Such a program can only function through a substantial flow of subsidies from donors or the government since loan recoveries are insufficient to maintain the revolving funds behind the program, or cover the costs incurred in servicing the program. Not surprisingly, high arrears were associated with large, long term loans as compared to other loan characteristics.

2. Critiques and Recommendations

In the face of these serious program deficiencies, recent attempts at program reforms were undertaken to improve program performance. IBAS has assumed complete responsibility for loan recovery, a function previously carried out with a guarantee program by the former GCDB. Political intervention in the allocation of funds have allegedly been lessened. Collateral in the form of a guarantor's bank account is presumably able to be assessed in the event of default. However, interest rates (14 percent) are still substantially below market rates (e.g. 20-26 percent), risk-prone longer terms loans are still emphasized, and administrative costs of the program are still covered by subsidies issued through the government's budget. It is unlikely that the program could even cover its costs with such a low interest rate (14 percent) even if the default problem is reduced substantially from its past high levels.

A. New Information System

An important strategy to reduce the risks of default would be to introduce a loan tracking information system. This approach quickly identifies shortfalls in installment repayments over amounts due for long term loans and then correlates this with loan properties and borrower characteristics. This contributes to risk management in two ways. First, one could immediately address the problem of default early in the history of the loan and immediately confront borrowers before any delinquent habits have been locked in place by inertia. Second, management could easily generate valuable information on the aggregate profile of loan arrears by borrower and loan type. This could create a risk/return profile by borrower type and business characteristics that could be used by loan officers evaluating new loan proposals. Such a system would allow IBAS to engage in more efficient risk management, thereby lowering its default losses and prolonging the life of its revolving funds.

B. Cost Effectiveness of the Program

The issue for the government to face is whether the program is at least cost effective, i.e. whether it is economizing in the most efficient manner the budgeted resources per loan issued and recovered and secondly, whether there are a sufficient number of deserving non-delinquent beneficiaries to justify the budgetary costs involved. In short, authorities would have to estimate the opportunity cost of using public monies in this fashion rather than in some alternative use recognizing that there is a substantial default problem in this loan program.

C. One Time Only Loan Practice

A controversial issue in the current IBAS program is the fact that a large majority of the borrowers are one time only clients. While there is no explicit restriction limiting borrowers to one loan, only a handful of entrepreneurs have received two loans in the current portfolio. IBAS authorities try to reach as large a number of microentrepreneurs as possible. They should be more interested in inculcating good loan habits over time and training their borrowers to manage financial flows in a sustained fashion with a more slowly growing clientele. The "one-shot" philosophy can develop a "turn-key" flavor in that the goal is to quickly allow the microentrepreneurs to buy some investment goods and then abruptly turn them loose to get on with business of production without any further access to finance from the program. This philosophy overlooks the equally important role that financial services should play in the process of modernizing small scale manufacturing activities. Once investment loans have been issued to a responsible borrower and her or his equipment is in place, smaller working capital loans could play a useful role in allowing microentrepreneurs to generate a higher stream of retained earnings for future investment.

Another weakness of this single loan approach is the probable impact it has on loan recovery. If a borrower does not gain a reward of continuing access to financial services through repaying his/her loan, then there is little incentive to do so. One suspects this may have played a role in the high arrears of the earlier programs described in this chapter. Given the fact that poor loan recovery quickly erodes a revolving fund, thereby hastening the end of the loan program, it would be in the interest of IBAS authorities to build more tangible incentives for loan repayment into their current program by permitting follow-up working capital loans to previous borrowers in good standing. In the end, IBAS would be servicing a smaller number of clients, but the program would be servicing these clients over a longer period of time with more sustained financial services (for those responsible borrowers repaying their loans) thereby graduating them into more secure business growth in the future. At the same time, the revolving fund would not be eroded through negative incentives creating poor loan recovery. In addition, IBAS gains additional valuable information on the borrowers performance that can allow it to screen its clientele more efficiently for future loan services. In conclusion, we recommend that IBAS continue working with the remaining volume of the revolving fund at their disposal to implement the above suggestions

for a trial period of one to two years. In the meantime, no new funding for credit should be permitted until results can be determined from these new program guidelines.

3. Summary of OSU Small Scale Enterprise Survey

Finally, a random sample survey carried by the OSU team in Greater Banjul underscored many revealing operational characteristics and financial channels servicing micro and small scale entrepreneurs in the Gambia. One hundred and fifty three entrepreneurs were interviewed divided equally into four key subsectors: bakeries, metal workshops, tailors, and tie and dye producers. Most were owner-operated with an average of 5 employees and a modest physical asset base of D 128,727. A majority of these small scale operators were working for someone else before launching their own business. Most were illiterate (59 percent) with an average age of 38 years and were members of fairly large households (10 members on average). Seventy percent were men and about 30 percent women entrepreneurs. Further, there was a distinct gender profile with female entrepreneurs accounting for a majority of the tailoring establishments and tie-dye operations unlike male operators who were predominant as bakers and metal workers.

A substantial majority of these entrepreneurs launched their businesses with personal savings rather than with external loans. The single exception to this rule was the subset of modern bakers who received off-shore financing for their equipment. All owner-operators drew heavily on retained earnings for their working capital. Next in order of priority was informal borrowing from family and friends. In third rank were advances from customers. These stood out in tailoring enterprises and metal workshops. Last in rank order was suppliers credit and formal loans. The former was most visible in the bakeries subsector and the later in the modern bakeries subsector. This descending rank order of funding sources follows the pecking order theory common to businesses in developed countries in which the safest source of finance (that does not jeopardize the entrepreneur's ownership control over her/his business), retained earnings, is used first, followed by various external sources in descending order of increased risk to the entrepreneur's control over her/his business.

All operators used both formal and informal savings instruments with formal bank savings accounts standing out for the relatively modern bakeries and tailoring subsectors and informal group savings or moneykeeper services used by the other more traditional subsectors. Women entrepreneurs more commonly operated through group savings vehicles (Osusus) while traditional male operators used moneykeepers.

Given the meager presence of formal loans through IBAS or through banks in this random sample of small scale operators, large expensive microenterprise programs can only hope to reach a very small subset of these producers. Therefore, it is all the more important to keep in mind that these producers can only be reached by more broad based

macroeconomic and trade policies. They are all universally impacted by any government regulations or policies that affect their costs or revenues such as tariffs, taxes, registration fees, access to foreign exchange, price controls, etc. Generally speaking the more open and liberalized the economy, the better the economic environment for microentrepreneurs. In conclusion, the recent liberalization of the Gambian economy has produced a more positive environment for such small scale operators. It is to be hoped that such policies continue and the transaction costs of registration and licensing be held at a minimum for these operations.

REFERENCES

Cuevas, Carlos E., "Enterprise Finance in Sub-Saharan Africa: An Analytical Framework," Economics and Sociology Occasional Paper No. 1973, Department of Agricultural Economics and Rural Sociology, The Ohio State University, August 1992.

Myers, Stewart C., "The Capital Structure Puzzle," The Journal of Finance, Vol. XXXIX, No. 3, July 1985, pp. 575-592.

316

Table VI-1 **Financial Indicators and Related Characteristics of the Indigenous Business Advisory Service (IBAS) Portfolio by Program Funding Source as of June 1991.**

	Program			
	EEC	UNCDF	Government	Total
	(1)	(2)	(3)	(4)
Year Started	1986	1985	1987	
No. of Borrowers	121	188	124	433
Male Borrowers	47%	64%	91%	67%
Female Borrowers	53%	36%	9%	33%
Disbursement[1]	1,017,297	2,797,204	1,140,788	4,955,290
Amount Due[1]	1,261,763	3,557,591	1,345,512	6,164,867
Total Interest[1]	244,466	760,387	204,723	1,209,577
Av. Loan Size[1]	8,407	14,879	9,200	11,444
Av. Maturity (months)	23	27	33	27
Av. Interest Rate (%)	11.6%	10.5%	6.8%	9.7%
Arrears[1]	344,078	1,316,007	1,034,520	2,694,605
Arrears Rate (%)	27.3%	37%	77%	44%

Source: Information derived from IBAS records.
Note 1: All amounts are in Dalasis.

Table VI-2 **Cumulative Distribution of Loan Amounts Granted by Program Source of Funds as of June 1991.**

Loan Amount Categories (in Dalasis)	Program							
	EEC		UNCDF		Government		Total	
	No.	(%)	No.	(%)	No.	(%)	No.	(%)
	(1)	(2)	(3)	(4)	(5)	(6)	(7)	(8)
0 - 3000	23	(19.6)	21	(11.2)	5	(4.0)	55	(11.3)
3001 - 6000	36	(29.7)	49	(27.6)	8	(6.5)	101	(22.3)
6001 - 9000	24	(19.8)	44	(23.4)	46	(37.0)	123	(26.3)
9001 - 12000	15	(12.4)	28	(14.9)	51	(41.0)	97	(21.7)
12001 - 15000	14	(11.6)	2	(1.0)	9	(7.0)	12	(5.8)
15001 - 25000	2	(1.5)	15	(8.0)	5	(4.0)	22	(5.0)
25001 - 35000	1	(0.7)	4	(2.1)	0	(0.0)	5	(1.1)
35001 - 45000	3	(2.5)	5	(2.6)	0	(0.0)	8	(1.8)
45001 - 65000	0	(0.0)	8	(4.2)	0	(0.0)	9	(1.8)
65001 - 85000	2	(1.5)	3	(1.6)	0	(0.0)	5	(1.1)
85001 - 100000	0	(0.0)	6	(3.2)	0	(0.0)	6	(1.4)
Above 100000	1	(0.7)	0	(0.0)	0	(0.0)	1	(0.2)
Total Number of Loans (and percent)	121	(100.0)	188	(100.0)	124	(100.0)	433	(100.0)

Source: Same as Table VI-1.

328

Table VI-3 Selected Characteristics of the Total IBAS Portfolio by Gender.

	Male Borrowers	Female Borrowers
	(1)	(2)
Average Loan Size (D)	13,111	7,789
Average Maturity (months)	28	25
Average Interest Rate (%)	9.8	9.4
Arrears Rate (%)	63.1	26.8

Source: same as Table VI-1.

Table VI-4 Sectoral Distribution of Enterprises Serviced by IBAS by Funding Source as of June 1991.

	Program							
	EEC		UNCDF		Government		Total	
Sector	No.	(%)	No.	(%)	No.	(%)	No.	(%)
	(1)	(2)	(3)	(4)	(5)	(6)	(7)	(8)
Services	63	(52%)	66	(35%)	67	(54%)	196	(45%)
Manufacturing	58	(48%)	103	(55%)	18	(14%)	179	(41%)
Agriculture	0	(0%)	18	(9.6%)	36	(29%)	54	(13%)
TOTAL	121	(28%)	188	(43%)	124	(29%)	433	(100%)

Source: same as Table VI-1.

Table VI-5 **Distribution of Delinquent Loans by Range of Arrears and Program Source of Lending as of June 1991.**

Amount of Arrears	Program							
	EEC		UNCDF		Government		Total	
	No.	(%)	No.	(%)	No.	(%)	No.	(%)
	(1)	(2)	(3)	(4)	(5)	(6)	(7)	(8)
0 = Fully Repaid Loans	87	(72.0%)	105	(56.0%)	2	(1.6%)	196	(45.0%)
1 - 3000	20	(16.5)	37	(20.0)	7	(5.6)	64	(14.8)
3001 - 6000	3	(2.5)	9	(4.8)	22	(17.7)	34	(7.8)
6001 - 9000	5	(4.1)	6	(3.2)	43	(34.7)	54	(12.5)
9001 - 12000	1	(0.8)	5	(2.6)	34	(27.4)	40	(9.2)
12001 - 15000	1	(0.8)	4	(2.1)	8	(6.4)	13	(3.0)
15001 - 25000	0	(0.0)	5	(2.6)	8	(6.4)	13	(3.0)
25001 - 35000	0	(0.0)	3	(1.6)	0	(0.0)	3	(0.7)
35001 - 45000	1	(0.8)	3	(1.6)	0	(0.0)	4	(0.9)
45001 - 65000	1	(0.8)	3	(1.6)	0	(0.0)	4	(0.9)
65001 - 85000	1	(0.8)	5	(2.6)	0	(0.0)	6	(1.4)
85001 - 100000	1	(0.8)	3	(1.6)	0	(0.0)	1	(0.2)
Above 100000	0	(0.0)	0	(0.0)	0	(0.0)	2	(0.4)

Source: same as Table VI-1.

Table VI-6 Definition of Variables in the Loan Repayment Model.

VARIABLE	DESCRIPTION
ARREARATE	Arrears Rate
LAMT	Amount of Loan Granted[1]
IR	Nominal Interest Rate in Percent
MAT	Loan Period in Months
GOV	Source of Funds Dummy Variable; 1=Government Program
UNCDF	Source of Funds Dummy Variable; 1=UNCDF Program
GENDER	Gender Dummy Variable; 1=Male
AGR	Sector Dummy Variable; 1=Agriculture

Note 1: All values are in dalasis.

Table VI-7 Regression Coefficients for the Loan Repayment Model.

	Arrears	
Variable	Coefficient	T-Ratio
	(1)	(2)
LAMT	0.01	7.06*
IR	3.22	12.35*
MAT	1.76	7.85*
GOV	74.44	17.54*
UNCDF	4.74	1.46
GENDER	-2.13	-0.71
AGR	2.68	0.65
R^2	0.67	
F-Value	127.40[1]	

Note 1: Amount in dalasis.
N = 428 Observations
* Significant at 1 percent level.

Table VI-8 **Economic and Business Characteristics of Sample Firms in the Small Scale Enterprise Survey.**

Sectors	Number	Percent
	(1)	(2)
Bakeries	39	25%
Metal Workshops	38	25%
Tailoring Workshops	36	24%
Tie-Dye	40	26%
Total	153	100%
Ownership Structure		
Owners	128	84%
Managers	6	4%
Rental	19	12%
Establishment Profile		
Average Number of Years in Operation		10 years
Average Years of Previous Experience		5 years
Average Number of Current Employees		5
Average Size of Physical Assets		D 128,727

Source: Enterprise Survey.

Table VI-9 Relevant Business History of Entrepreneurs in the Small Scale Enterprise Survey.

Previous Employment	
Started with this Business	16%
Other Private Business	33%
Employee	51%
History of Business	
Original Owner	83%
Business Already Existed	17%
Reason for Being in Private Business	
Self Employment	45%
Good Opportunity	4%
Family Business	26%
The only Profession he/she Knows	16%
No other Business was Available	8%

Source: Enterprise Survey

Table VI-10 Socio-Economic Characteristics of the Entrepreneurs in the Small Scale Enterprise Survey.

Gender	
Male	71%
Female	29%
Marital Status	
Married	83%
Single/Divorced	17%
Education Level	
High School Graduate	14%
1-11 Years of High School	27%
Illiterate	59%
Average Age	38 years
Average Household Size	10 members

Source: Enterprise Survey

Figure VI-1
Sources of Financing and Savings Channels Identified in the Small Scale Enterprise Survey

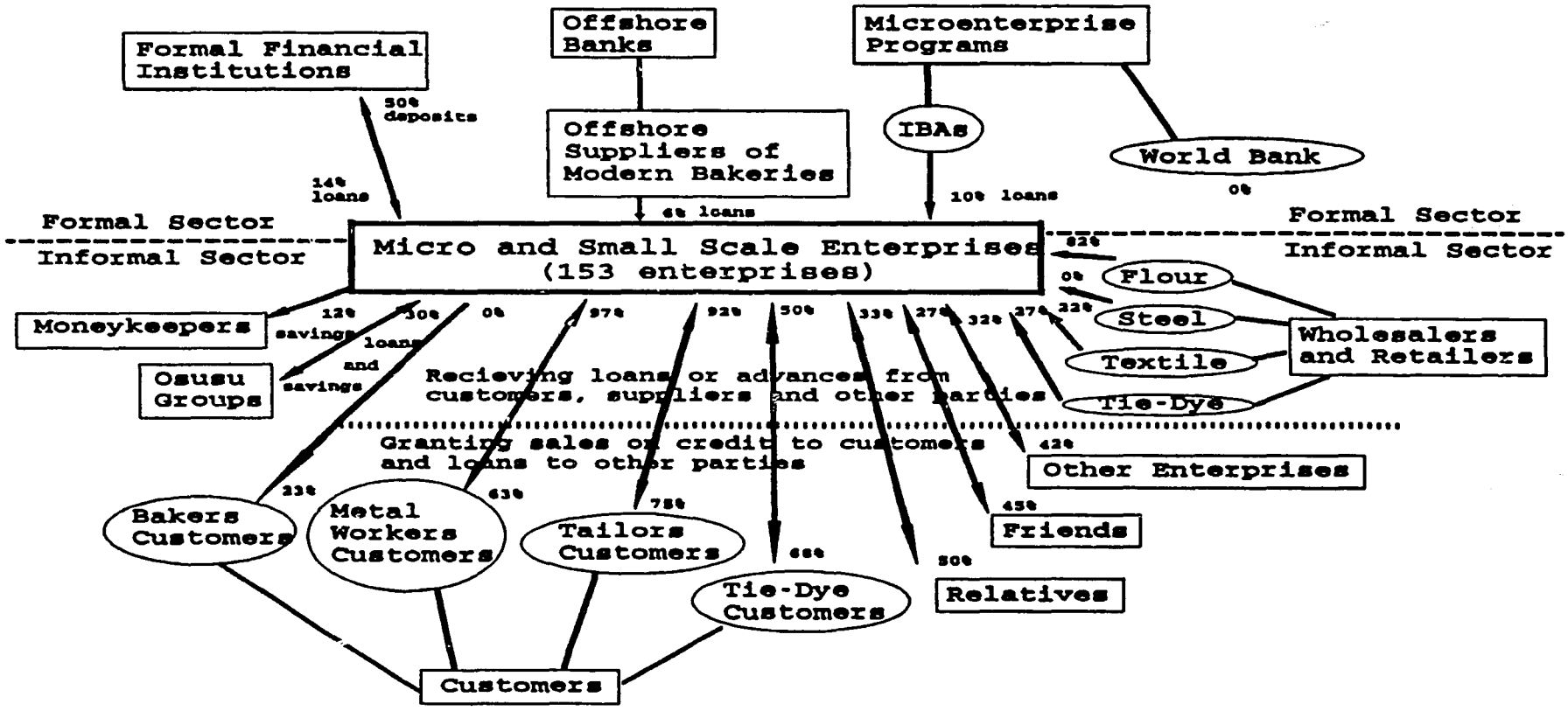

%: Share of entrepreneurs engaged in a financial contract (either receiving or granting loans or placing deposits or savings) with the identified economic agent.

Table VI-11 Historical Sources of Capital and Current Funding Sources Reported in the Small Scale Enterprise Survey.

	Bakeries				
	Modern	Traditional	Metal Workshops	Tailor Workshops	Tie-Dye Producers
Initial Capital					
Personal Investment from Savings	15.4%	69.2%	92.1%	48%	55%
Family	7.7%	11.5%	7.9%	34%	27.5%
Friends	0%	0%	0%	5.6%	2.5%
Formal Loan	76.9%	0%	0%	2.8%	9.5%
Supplier Loan	7.7%	19.2%	0%	0%	12.5%
Sources Of Funds for Current Operations					
Entrepreneurs Using Retained Earnings	100%	100%	100%	100%	100%
Entrepreneurs Using Informal Loans	54%	69%	68%	50%	85%
Entrepreneurs Using Formal Loans	59%	0%	10%	39%	22%
Entrepreneurs Using Supplier Credit	85%	81%	0%	22%	27%
Entrepreneurs Using Customer Credit/Advance	0%	0%	97%	92%	50%
Formal Loans					
Received a Loan in the Past Five Years	61.5%	0%	0%	29.6%	17.5%
Received a Loan in the Past One Year	38.5%	0%	0%	11.4%	2.5%
Ever Received a Loan	61.5%	0%	16%	47%	25%

Source: Enterprise Survey.
Note: % corresponds to percentage of the sample.

Table VI-12 Savings Channels Reported in the Small Scale Enterprise Survey.

	Bakeries		Metal Workshops	Tailor Workshops	Tie-Dye Producers
	Modern	Traditional			
Savings					
Share of Sample Entrepreneurs With Deposits in Formal Institution	90.9%	0%	16%	47%	25%
Informal Groups					
Entrepreneurs Participating in Informal Groups	0%	8%	5%	44%	65%
Average Size of Contribution (D)	0	30	106	300	167
Moneykeeper					
Entrepreneurs Saving with Moneykeeper	0%	38.5%	16%	0%	7.5%
Average size of Deposit (D)	0	120	587	0	333

Source: Enterprise Survey.
Note: % corresponds to percentage of the sample.

CHAPTER SEVEN

COMMODITY AND FINANCIAL FLOWS THROUGH THE FERTILIZER MARKETING CHANNELS

by

Geetha Nagarajan

Richard L. Meyer

and

Douglas H. Graham

Table of Contents

I. INTRODUCTION 1

II. METHODOLOGY 2

III. ANALYSIS 5

1. The Fertilizer Sector 5

2. The Participants 7
   A. Pre ERP Period 7
   B. Post ERP period 8
      a.) Importation of fertilizers 8
      b.) Wholesale Fertilizer Distribution 8
      c.) Retail Fertilizer Distribution 8
      d.) Reexport of fertilizers 9

3. Fertilizer Trade and Financial Services Through Various Marketing Channels 9
   A. Pre ERP period 10
      a.) The GPMB Channel (C1) 10
      b.) Unregistered Private Entrepreneurs (C2) 11
   B. Post ERP period 11
      a.) Trade Channels 11
         i) The GCU Channel (C1) 12
         ii) The FAO Channel (C2) 12
         iii) The GOG Channel (C3) 14
         iv) Registered Private Entrepreneurs (RPE) Channel (C4) 14
         v) Unregistered Private Entrepreneurs (UPE) Channel (C5) 15
         vi) Consumers 16
      b.) Competition and Collaboration among Trade Channels 17
      c.) Financial Arrangements 18
         i) The GCU Channel 18
         ii) The FAO 19
         iii) GOG 20
         iv) RPEs 20
         v) UPEs 20
         vi) Final Consumers 20

378

IV. CONSTRAINTS ON THE DEVELOPMENT OF THE FERTILIZER SECTOR 21

1. Strengths and Weaknesses of the Current System 21

2. Constraints Faced by Private Entrepreneurs 22
   A. Problems in predicting fertilizer demand 22
      a.) Fertilizer prices and subsidies 23
      b.) Yield response 23
      c.) Groundnut prices 24
      d.) Credit for fertilizer purchases 24
      e.) Uncertainty about government and donor programs 24
   B. Profitability of the Fertilizer Trade 25
      a.) Economies of scale and profitability 25
      b.) Economies of scope for existing trading firms 25
      c.) Barriers to entry for new firms 26
   C. Financial constraints 26
      a.) Offshore fertilizer loans 26
      b.) Making retail loans for fertilizer 26
      c.) Cost of borrowed funds 27

V. CONCLUSIONS AND RECOMMENDATIONS 27

REFERENCES 30

List of Tables

Table VII-1 Productivity and Value Cost Ratio of Fertilizer Use on Major Crops, 1985 and 1991. 31
Table VII-2 Number and Type of Participants Sampled, by Location in the Fertilizer Marketing Chain. 32
Table VII-3 Fertilizer Consumption in The Gambia, 1972-90. 33
Table VII-4 Profile of Fertilizer Agents by Marketing Levels during Pre and Post Economic Recovery Program (ERP) Periods. 34
Table VII-5 Volume of Fertilizer Imported into The Gambia, Pre and Post ERP, by Participant and Fertilizer Type, 1980-1991. 35
Table VII-6 Fertilizer Prices in The Gambia, 1980-89, in Dalasis per Ton. 36
Table VII-7 Volume of Fertilizer Distributed, 1988-92. 37
Table VII-8 Terms and Conditions of Financial Arrangements in the Fertilizer Sector in the Pre ERP Period. 38
Table VII-9 Percent of Groundnut Farmers Purchasing Compound Fertilizer by Source of Purchase and Regional Division in The Gambia, 1991. 39

339

Table VII-10 Percent of Area Using Fertilizer by Regional Division and Crop, 1991. 40
Table VII-11 Percent of Area Fertilized in The Gambia, by Crop and Type of Fertilizer, 1991. 40
Table VII-12 Terms and Conditions of Financial Arrangements in Fertilizer Sector by Market Level, Agents and Creditors during Post ERP Period. 41
Table VII-13 Strengths and Weaknesses of Current Fertilizer Marketing Agents and Major Constraints Faced by The Market Channels. 42
Table VII-14 Area, Yield and Production of Major Crops, 1979/80 to 1991/92. 43

List of Figures

Figure VII-1 Configuration of the Fertilizer Trade Channels in the Pre ERP Period . 44
Figure VII-2 Configuration of the Fertilizer Trade Channels in the Post ERP Period (1990-92 Situation) 45

List of Appendices

Appendix Table VII-1 List of Cooperative Produce Marketing Societies Sampled for the Study. 47
Appendix Table VII-2 Sample of Private Dealers (Affiliated with FAO) Interviewed for the Study. 47
Appendix Table VII-3 Name and Location of Samples Villages where Farmers/Kafos were Interviewed. 48
Appendix Table VII-4 Fertilizer Recommendations and Requirements in The Gambia. 48

ACRONYMS USED IN CHAPTER SEVEN

AATG	Action Aid, The Gambia
BD	Block Demonstration
CDP	Colton Development Project
CPMS	Cooperative Produce Marketing Societies
D	Dalasis
ERP	Economic Recovery Program
FAO	Food and Agriculture Organization
GCU	Gambia Cooperative Union
GOG	Government of The Gambia
GPMB	Gambia Produce Marketing Board
GRT	Gambia Rivert Transport
JP	Jahally-Pacharr Rice Development Project
LRD	Lower River Division
MGA	Maize Growers Association
MID	McCarthy Island Division
NASS	National Agriculture Sample Survey
NBD	North Bank Division
NGO	Non-Governmental Organization
NIE	New Institutional Economics
PD	Private Dealers
PDN	Private Dealers Network
PE	Private Entrepreneurs
RPE	Registered Prviate Entrepreneurs
UPE	Unregistered Private Entrepreneurs
URD	Upper River Division
URDIP	Upper River Division Irrigation Project
VRS	Village Responsibility System
WD	Western Division
WID	Women in Development

CHAPTER SEVEN
COMMODITY AND FINANCIAL FLOWS THROUGH THE MARKETING CHANNELS OF THE FERTILIZER SECTOR IN THE GAMBIA*

I. INTRODUCTION

Since the implementation of the Economic Recovery Program (ERP) in 1985, the fertilizer sector in The Gambia has undergone a gradual process of liberalization. The evolving stages of privatization and liberalization of the sector relaxed legal barriers to entry and tried to encourage private entrepreneurs to perform four functions in the acquisition and distribution of inputs to final consumers: importing, wholesaling, retailing and re-exporting.[1] The response from private entrepreneurs has been limited to date, but the number of fertilizer trade channels has increased, and the participants within each trade channel have changed.

Currently, the various stages of fertilizer trade including importation and distribution are conducted through multiple trade channels that increase the timely availability of fertilizer. These channels include heterogenous formal, semi-formal and informal participants who compete and collaborate with each other using diverse market technologies.

The fertilizer trade involves a flow of financial services provided under different contract terms and conditions by diverse types of financial sources. The trade and financial channels are often intertwined promoting linkages among the heterogenous agents within and across trade channels.

While the proliferation of trade channels indicates numerous sources of supply, the lethargic response from private entrepreneurs raises serious doubts about the competitiveness and profitability of the fertilizer trade.[2] The continued involvement of the government in the sector through its special programs and the targeted programs of NGOs have distorted the fertilizer distribution system and have created market fragmentation.

---

* We acknowledge with appreciation the valuable assistance provided by Mr. Gai (GCU), Mr. Christenssen (FAO), Mr. Soussier (AATG), Mr. Mukthara (RPE), Mr Dibba (JP), Mr. Brewis (GPMB), FAO private dealers, and several farmers in conducting this study. The usual disclaimers apply.

[1] The input market is composed of an array of sectors that involve trading in fertilizer, farm machinery and equipment, seeds and plant protection chemicals. This chapter is limited to the fertilizer sector.

[2] Chapter VIII reports on how the liberalization of commodity markets in 1985 has resulted in the active participation of private entrepreneurs and a contestable market for basic food commodities.

Fertilizer is thought to be an important input in increasing returns to the agricultural sector.[3] If fertilizer is truly an important production input, it is important, therefore, to create a viable fertilizer system that will provide a wide access to fertilizers by farmers throughout the country. The disappointing performance of public sector fertilizer importation and distribution led policy makers to opt for a private sector alternative when it embarked on the ERP in 1985. Several issues need to be addressed, however, in order to understand how the private sector may respond to fertilizer privatization in the future. Can private entrepreneurs function as independent and potential alternative channels? What are the major constraints that restrict their active participation in the sector? Are any special incentives necessary to induce private entrepreneurs to provide an efficient marketing channel? What should be the role of the government, NGOs, and international agencies in the sector? What role do financial markets need to play to support the development of a viable fertilizer distribution system?

The objective of this chapter is to analyze the fertilizer sector and from this analysis derive implications that can be used to formulate appropriate policies for the fertilizer sector. Specifically, the chapter:

- describes the evolution of the fertilizer marketing system over time and documents the various types of formal, semi-formal and informal trade channels and participants that currently constitute the fertilizer sector;
- explains the nature of the linkages that exist within and across the trade channels, and the heterogenous trade arrangements that facilitate the flow of fertilizers to farmers through various channels;
- analyzes the formal and informal financial contracts that facilitate the flow of fertilizer; and
- identifies the major constraints that still impede the development of a viable and competitive fertilizer marketing system.

II. METHODOLOGY

The current Gambian fertilizer sector is composed of diverse types of formal, semi-formal and informal agents or participants who compete and coordinate with each other to facilitate the flow of fertilizers through various channels to farmers.[4] The flow of

[3] It has been estimated that D1 spent on fertilizers will increase benefits from agricultural production by D2.67 to D3.08 (Braun et al., 1990).

[4] The terms agents and participants are used interchangeably in this chapter.

commodities in a specific sector in a specific market through different channels involving heterogenous participants under a competitive institutional and regulatory environment cannot be adequately analyzed by simply examining individual channels in isolation or through cross-section studies that only involve final consumers. However, a subsector approach that considers interactions, both competitive and complementary, among diverse agents and channels in a specific market is an appropriate methodological tool to examine a dynamic sector characterized by heterogenous participants. Therefore, this study employed a subsector approach (Boomgard, et al., 1986).

The subsector approach follows the principals of the New Institutional Economics (NIE) school of thought to examine the vertical integration that facilitates coordination among diverse types of agents and contracts.[5] It is based on the concepts of verticality, coordination among channels, competition between channels, and leverage in a specific market engaged in production/distribution. By focusing on a single market, the subsector approach helps identify the institutional relationships that affect competitive positions of the various channels, the ease of coordination among the channels and obstacles to growth in different channels (Boomgard et al., 1992).

The research methodology employed in this fertilizer study can be summarized as follows:

- The fertilizer sector was selected because of its importance in the input market, and because it has undergone important changes in its composition due to deregulation of the input markets. It is generally believed that the use of fertilizer contributes significantly to agricultural production. For example, Table VII-1 reports the FAO estimates of the impact of fertilizers on agricultural productivity. These estimates indicate a significant agricultural productivity response to fertilizer applications. While the value cost ratio is estimated to have declined over the past five years due to adverse input and output price ratios, the additional revenue from fertilizer use is still estimated to be positive.[6]

- The number, size, functions and type of formal and informal trade channels were identified, along with the principal participants involved in these diverse channels and the coordinating mechanisms in terms of contract terms and conditions that link the heterogenous participants within the channels.

- Quantitative and qualitative data were collected through an examination of official records, field interviews with sector participants at various levels using systematic sampling procedures, and the direct observation of key operations by the research team.

---

[5] See Nabli and Nugent (1989) for further details on New Institutional Economics.

[6] The value cost ratio is calculated as a proportion relating the difference in crop revenue with and without fertilizer use to the cost of fertilizer. The FAO estimates use data from yields obtained on fertilizer demonstration plots and indicate the value added effect of chemical fertilizer use under these controlled conditions.

- The competitiveness and coordination among various channels were examined to assess the implications of proposed changes in inter- and intra-channel relationships.

It was discovered that the fertilizer sector includes heterogenous formal, semi-formal and informal agents operating through various channels to supply fertilizer to the final consumers. For the purposes of this chapter, the formal participants were defined to include the FAO, the GCU, and government development projects.[7] Non-Governmental Organizations (NGOs) and Registered Private Entrepreneurs (RPEs) were classified as semi-formal participants while Unregistered Private Entrepreneurs (UPEs)[8] and informal groups like kafos were classified as informal participants.[9] The informal participants operate independently or link with formal participants to facilitate the flow of fertilizers to the consumers. The study carried out detailed interviews with four types of participants at all marketing levels: importers, wholesalers, retailers and final consumers. The importers and wholesalers were the GPMB, the GCU, the FAO, the COG, the RPEs and the UPEs, while the retail distributors included the Cooperative Produce Marketing Societies (CPMS), the FAO supported Private Dealers Network (PDN), government projects, the RPEs, the NGOs, the UPEs and kafos.

Table VII-2 presents the composition and size of the sample of market participants interviewed at all marketing levels in the fertilizer sector. The sample size at each level within the market channels was dictated by logistical reasons. While all importers and wholesalers were interviewed due to their small number, a stratified random sampling procedure was followed to choose retailers located in all five divisions of the country.[10] The choice of private fertilizer retailers affiliated with the FAO was based on geographic location, and previous performance and gender, while the choice of CPMS was based on geographic location and previous performance in input marketing (see Appendices VII-1 and VII-2 for a list of those sampled). Officials in government projects like the Jahally-Pacharr

---

[7] The government development programs include the Jahally-Pacharr Irrigated Rice Development Project (JP project), the Cotton Development Project (CDP) and the Upper River Division Irrigation Project (URDIP).

[8] The RPEs are licensed by the Department of Business and Commerce. The UPEs are unlicensed and usually operate in parallel markets.

[9] Kafos are informal groups of varying strengths and cohesiveness that are multifunctional in nature. These groups are homogenous in terms of members' age, ethnicity, heritage, gender and occupation but have various membership sizes. In general, members of farmer kafos cultivate a common plot of groundnuts, cereals or vegetables and contribute the sale proceeds to a common village fund. This village fund functions as an insurance substitute to primarily mitigate village level contingencies and, to a lesser extent, member contingencies. Some kafos also undertake savings and credit activities on an organized basis (see Shipton in Adams and Fitchett, 1992, for further details).

[10] The five divisions are Western Division (WD), Lower River Division (LRD), MaCarthy Island Division (MID), North Bank Division (NBD) and Upper River Division (URD).

Rice Project (JP) and the Department of Agriculture were also interviewed along with officers in the NGO Action Aid, The Gambia (AATG).[11]

To assess the extent of farmer access to the CPMS and to the FAO private dealers, a purposive sample of 14 villages was selected that were located in the market area of the sampled CPMS and FAO private entrepreneur stores (see Appendix VII-3 for a list of the sample villages). In these villages, several farmers and kafos were interviewed in groups using the rapid appraisal technique rather than using structured questionnaires that are usually administered to individuals.

Some of the information needed for this study may be considered to be sensitive, especially for private entrepreneurs involved in importing and marketing fertilizer. For this reason, informal interviews were conducted with participants at all levels using unstructured questionnaires designed to gather qualitative data on the nature of operations, number and type of clients, sources of finance, type of competitors, and major constraints faced by the respondents. In addition, several official documents like annual reports, financial statements, consultant reports and government memorandums were consulted to gather quantitative data on the size of the sector, mode of operation and sources of finance.

III. ANALYSIS

1. The Fertilizer Sector

During the late 1970s, the Government of The Gambia (GOG) gave high priority to increasing agricultural production through the adoption of modern technology. The use of agricultural inputs like modern seed varieties, chemical fertilizers and plant protection materials were stimulated to boost agricultural productivity. Government programs and agricultural extension services were, therefore, coordinated with international agencies like the Food and Agricultural Organization (FAO) to develop farmers' awareness about fertilizer use. A supply-leading strategy of input price subsidies was followed to raise the demand for production-augmenting chemical fertilizers. Fertilizer was distributed either free or at a retail price that represented only 15-30 percent of the actual CIF price.[12] Consequently, fertilizer consumption increased as farmers responded to these subsidized prices. Table VII-3 reports the FAO estimates of fertilizer consumption which amounted to only about 400 tons of nutrients in 1972 but rose to 4,000 tons by 1980. During the 1980s, fertilizer use fluctuated widely, ranging from a peak of 4,500 tons in 1984 to a low of 1,645 tons in 1986.

---

[11] While AATG was the only NGO that distributes fertilizer, the JP was selected for logistical reasons as it was very active around Sapu, the sample area chosen for gathering data included in chapter V in this report.

[12] See GCU Annual Report, 1991.

The induced effect of subsidies on fertilizer consumption is shown in Table VII-3 by the sharp decline in fertilizer consumption after 1984 when the government phased out subsidies and deregulated the fertilizer sector.[13]

The growing fertilizer demand was met by government parastatals like the Gambia Produce Marketing Board (GPMB) and the Gambia Cooperative Union (GCU) in the early 1980s. These parastatals, however, suffered from mismanagement leading to poor marketing services, and required huge government subsidies to sustain their operations (Clark, 1987). The country's increasing external debt problem in the early 1980s restrained continued government support of the parastatals.[14] Inadequate and inconsistent fertilizer policies along with incompetent management of the parastatals led to input market inefficiencies and estimates of a reduction in agricultural production.[15] The need for a more efficient and self-sustaining fertilizer sector became obvious. Therefore, in June 1985, the government embarked on the ERP that suggested liberalization of the fertilizer sector to improve market efficiency through a competitive private sector. The fertilizer sector was deregulated, price subsidies were phased out and private entrepreneurs were encouraged to enter and compete in the sector.

The implementation of the ERP has had a profound influence on the composition and market share of the various fertilizer trade channels. The deregulated policy environment aimed at promoting competition in the fertilizer sector through the active participation of private entrepreneurs. A competitive market system was expected to provide efficient alternative trade channels that would improve farmer access to fertilizer.

While government parastatals were the sole participants in the fertilizer sector in the pre ERP period, a number of private entrepreneurs entered the market in the post ERP period. However, the response by private entrepreneurs to enter the fertilizer importing and wholesaling business has been limited due to capital constraints, uncertainty in the government's fertilizer policy, low profit margins compared to other commercial activities, high fertilizer carry-over, market risk, and a lack of entrepreneurial experience in fertilizer marketing.[16] Therefore, the Department of Agriculture engaged in fertilizer importation on an emergency basis using Italian grants from 1986 to 1989. The fertilizer was distributed

---

[13] It is interesting to note that the sharp decline in fertilizer use after 1985 did not appear to affect yields of major crops such as groundnuts, maize and millet in a significant way. The reduction in yields in 1990-91 was due to severe droughts during the early crop production cycle. There are two possible explanations: (i) low output response to fertilizers, (ii) overuse of cheap fertilizers in pre ERP period. The implications of these observations will be discussed later.

[14] See Chapter I for details.

[15] It was estimated that the delay in fertilizer distribution in 1985 resulted in a reduction amounting to 10% of agricultural GDP (FAO, 1991).

[16] See FAO, 1991.

to farmers through the GCU during 1986-87, and through the GCU and the FAO with its network of private dealers selling to farmers since 1988.[17] Consequently, following the ERP a number of heterogenous agents entered the fertilizer sector leading to a change in the composition of the marketing channels involved in fertilizer distribution.

2. The Participants

The fertilizer marketing system changed substantially following the ERP. Table VII-4 presents the evolution of the marketing system from 1974 to 1991. The presence of multiple channels and participants in the post ERP fertilizer sector is obvious. While participation by private entrepreneurs was negligible before the ERP, there has been a limited response in the post ERP period.

A. Pre ERP Period

Until 1985, there were no fertilizer production/mixing units in The Gambia. Therefore, the GPMB was exclusively entrusted with fertilizer importation through its London office. The volume of fertilizer imports is presented in Table VII-5.[18] The imports were based on an estimate of national fertilizer demand provided by the Department of Agriculture. The GPMB also functioned as a wholesaler. The marketing margins and the retail price of inputs, which often involved subsidies, were determined by the GPMB in consultation with the government. Fertilizer retailing was primarily carried out by the GCU through its affiliated 86 Cooperative Produce Marketing Societies (CPMS) and several government projects.

Private entrepreneurs were considered to be a viable alternative method to retail fertilizer in the late 1970s. A pilot project was initiated in 1979 through funds from the FAO under the Fertilizer Marketing and Credit Assistance Project to incorporate private entrepreneurs into fertilizer retailing. About 50 RPEs were used to distribute 204 tons of fertilizers. The program collapsed, however, due to a lack of government support and low profit margins for the traders.[19] Nonetheless, a parallel market operated through UPEs. These UPEs were often involved in petty fertilizer import and export transactions through cross border trade, especially with Senegal. The direction of fertilizer flow was influenced by

---

[17] Because of the weak voluntary response by private entrepreneurs, FAO established a Private Dealer Network in 1988 to incorporate private entrepreneurs into fertilizer trading, especially at the retail level.

[18] The quantity of fertilizer imports in 1988 was low due to huge stocks carried from the previous years.

[19] The government supplied fertilizers at a subsidized rate immediately after introducing the private entrepreneurs (PEs) into the market, and the PEs could not compete without subsidization. The lack of commitment from the government towards the PEs discouraged them from continuing in the fertilizer market.

fertilizer price policies followed in The Gambia and Senegal. While there is no official documentation on the volume of fertilizer transacted through these informal channels, it was reported to be minimal.

B. Post ERP period

With the implementation of the ERP in 1986, the GPMB was divested of fertilizer importation. Import tariffs were lowered and price subsidies were discontinued in 1987 as shown in Table VII-6. While the subsidies ranged from 6 to 80 percent in the pre ERP period, they were gradually reduced to zero after 1986. In the post ERP period, fertilizer prices at the wholesale and retail level were based on world market prices. Private entrepreneurs were encouraged to actively participate in fertilizer imports, distribution and reexports. The volume of fertilizer imports and its distribution through various channels is presented in Table VII-5 and Table VII-7.[20]

a.) Importation of fertilizers

Whereas the ERP reduced import tariffs and regulation which favored private entrepreneurs, they were unable to engage in fertilizer importation reportedly due to capital constraints, access to foreign exchange, uncertainty in the government's fertilizer policy, low profit margins compared to other commercial activities, high carry-over and market risks due to slow turn-over, and a lack of marketing experience. Therefore, the Department of Agriculture imported fertilizer through grants from the Italian government during the 1986-89 period. With the drying up of Italian grants in 1989, the GCU, the FAO, the GOG and a few RPEs (with the help of FAO) got involved in fertilizer importation. While there is anecdotal evidence on importation by UPEs through cross border trade with Senegal, it is difficult to quantify the volume transacted.

b.) Wholesale Fertilizer Distribution

The GPMB remained as the principal fertilizer wholesaler until 1987. With the divesture of the GPMB from the GCU coupled with the slow response from private entrepreneurs, the GCU and FAO assumed the responsibility of fertilizer wholesaling beginning in 1988. In that year, the fertilizer imported by the Department of Agriculture was auctioned off to the FAO and the GCU for wholesaling.

c.) Retail Fertilizer Distribution

The GCU was exclusively entrusted with primary level retailing during 1986 and 1987, and it utilized the CPMS and government development projects as secondary retailers. In 1988, the FAO established a Private Dealer Network (PDN) network to act as its primary

[20] The differences in fertilizer imports and distribution were smoothed by inventories carried from previous years.

retailers, and the GCU became a farmer owned private cooperative with 54 affiliated CPMS to engage in retailing.[21] Since 1988, the GCU used its affiliated CPMS while the FAO channeled its fertilizer through its PDN, NGOs (AATG) and government programs at the primary retail level. Furthermore, kafos and an undocumented number of UPEs have also functioned as secondary retailers. The kafos, in general, were linked to FAO private dealers, the NGOs, and the UPEs.

d.) Reexport of fertilizers

No official documentation exists on fertilizer reexports in The Gambia but a limited amount of fertilizer reexportation is known to exist among agents in informal trade channels involved in cross border trade. All importers interviewed expressed a need to reexport to neighboring countries to realize greater scale and scope economies in fertilizer trade. Indeed, reexports are a rational option considering the strategic geographic location of The Gambia and its liberal export and import tariff structure compared to neighboring countries like Senegal, Bissau, Mauritania and Guinea-Bissau. Furthermore, the cost of maintaining a large inventory is not economical if it only serves the limited demand of local consumers.

The efficient flow of fertilizers through layers of heterogenous marketing agents within various trade channels requires a well knit organizational network that includes a good physical and financial infrastructure. The next section examines the operational practices of the various trade channels in the fertilizer sector.

3. Fertilizer Trade and Financial Services Through Various Marketing Channels

As discussed above, the liberalization of the fertilizer sector has led to an increase in the number of marketing agents and trade channels used to distribute fertilizer. Because of the ERP, farmers generally have a wider choice of fertilizer sources to satisfy their demand.

The efficiency of fertilizer distribution is influenced by two important factors that were included in this study: (i) the availability of physical infrastructure facilities, and (ii) access to financial services. These factors can be seen in the operational systems of the various fertilizer marketing channels described in this section for the pre and post ERP periods. The participants within the various trade channels are described first followed by the terms and conditions of the financial contracts that link the diverse agents within a trade channel.

[21] The 86 CPMS that existed before 1988 were reduced to 56 CPMS after 1988 through mergers and the closure of a few non-performing CPMS. See Chapter III on the GCU for further details.

A. Pre ERP period

Fig. 1 illustrates the configuration of the fairly simple fertilizer trade channels that existed in the pre ERP period. The fertilizer sector was dominated by two channels: (i) the GPMB (C1) at the import and wholesale level collaborating with the GCU at the retail level, and (ii) a number of UPEs (C2).

a.) The GPMB Channel (C1)

The GPMB was a government parastatal primarily involved in buying, processing and exporting groundnuts. To increase groundnut production, it undertook the importation and wholesale marketing of agricultural inputs including fertilizers. Imports were based on fertilizer demand estimated by the Department of Agriculture. After importing the product through the port of Banjul, the fertilizer was moved to seven GPMB and GCU storage depots upcountry by The Gambia River Transport (GRT) company. The GCU with its widespread network of 86 CPMS served as an ideal channel to distribute fertilizer at the retail level.[22] The fertilizer was moved from GPMB and GCU depots to CPMS depots from which it was transported to the respective village branches for distribution to farmers and kafos.

The fertilizer trade was financed by multiple financial sources using simple arrangements at the various stages in the fertilizer channel. The importation and wholesale activities of GPMB were financed through revenue from groundnut exports.[23] The primary retail activities of the GCU were financed by the GPMB, the GCDB and government programs. From 1972 to 1984, the GPMB sold fertilizer to the GCU by extending interest free credit lines. An annual interest rate of 21 percent was charged after 1984. The GCU purchased groundnuts from the farmers and sold them to the GPMB. Therefore, the repayment to the GPMB by the GCU was secured by direct deductions from the groundnut marketing proceeds of the GCU. The GCU was also financed through an overdraft facility extended by the GCDB from 1972 until 1985. While the interest rate charged by the GCDB on these overdrafts varied over the years, it was 9 percent/per year beginning in 1980.[24] In addition, donor funded projects such as the Jahally-Pacharr Rice Development Project provided interest free loans to the GCU beginning in 1983 to purchase fertilizer from the GPMB for distribution to farmers in their project areas. Beginning in 1985, the ADP II funds from the World Bank financed the GCU's fertilizer operations free of interest. The

---

[22] The CPMS are large farmer organizations frequently with a membership of over 1000 farmers serving a geographical area covering 10 to 15 villages. Each CPMS is sub-divided into village branches and each village branch has an elected committee that represents the village in the CPMS management committee.

[23] The GPMB purchased groundnuts from the GCU through loans from the Central Bank and processed them for export.

[24] The GCDB in turn obtained refinance funds from the Central Bank.

secondary fertilizer retail distribution by the CPMS was financed by the GCU at 13 percent/per year beginning in 1980. The CPMS usually distributed fertilizer on credit at 17 percent/per year to its final consumers at the same time that the government programs frequently supplied fertilizer on credit to farmers charging zero or very low interest rates (see Table VII-8 for details).

The low interest rates charged were due in part to the non-profit objective followed by these various agents involved in the fertilizer sector. The primary objective of the GPMB and the GCU was output marketing. Therefore, the fertilizer trade was not considered to be a business venture; rather fertilizer distribution was used as a hidden subsidy to farmers. Furthermore, grants from international agencies were aimed at increasing fertilizer use to stabilize agricultural production. Consequently, the fertilizer sector was not self-sustainable and required huge subsidies from the government. Although Table VII-6 shows that fertilizer was distributed at a very low price up to 1985 by the parastatals, the flow was irregular. The inefficient distributional organization of the parastatals was partly responsible for these problems.

b.) Unregistered Private Entrepreneurs (C2)

While it was rarely documented, several UPEs were reported to be involved in fertilizer trade, especially in exporting fertilizer to Senegal through borders. Informal interviews with groups of farmers revealed that they were active in selling fertilizer to the Senegalese since the Gambian prices were lower than Senegalese prices. In the early 1980s, fertilizer prices were heavily subsidized in the Gambia compared to market prices in Senegal. The majority of the UPEs obtained their fertilizer from the GCU on credit and sold it to Senegalese.

B. Post ERP period

With the liberalization of the fertilizer sector, the configuration of the trade channels began to change. New trade channels and financial sources emerged with different terms and conditions. While domestic banks have been reluctant to finance fertilizer distribution activities, a number of external financial sources have been available from international agencies.

a.) Trade Channels

The current configuration of fertilizer trade channels is diagramed in Figure 2. It is led by the GCU (C1), the FAO (C2), the RPEs (C3), the GOG (C4) and the UPEs (C5) that represent a diverse set of objectives.[25]

[25] See Chapters II, III and IV in this report for further details on the AATG, the GCU and the FAO, respectively.

i) The GCU Channel (C1)

After it was privatized into a private farmer cooperative in 1988, the GCU has made efforts to revitalize its organizational set-up for efficient input and output marketing. While the non-profit motive still remains, attempts are being made to run a sustainable marketing operation through its CPMS and village branches. Beginning in 1988, nonperforming CPMS were either merged or closed, the savings activity was discontinued, overstaffing was reduced, and strict guidelines for agricultural input credit operations were followed.[26] Consequently, the 86 CPMS were reduced to 54 which undertake output and input marketing, including fertilizer.

After importing the fertilizer, the GCU transports it to the CPMS depots before the rainy season. The volume of fertilizer transported to each CPMS is based on its demand estimates and fertilizer availability at the GCU. The CPMS base their demand estimates on fertilizer requests received from their respective village branches that in turn solicit fertilizer loan applications from farmer members.[27]

The GCU, despite the entry of other agents, still remains the primary trade channel in the fertilizer sector with a wide rural penetration through its CPMS network. Nearly 10,000 farmers, mostly men, are estimated to have access to fertilizer through the GCU network. Visits to 14 CPMS throughout the country revealed that while the GCU is yet to be vitalized as a cost efficient trade channel, it nonetheless has an infrastructure to function as a viable alternative fertilizer trade channel. The new village responsibility system was observed to revive member participation in the cooperative movement and create member awareness about mismanagement within the GCU headquarters.[28] The efficiency of the GCU is affected by macroeconomic policies, input and output price policies in The Gambia and Senegal, and natural calamities in the country which influence fertilizer demand by final consumers.

ii) The FAO Channel (C2)

The FAO has actively advocated the liberalization of the fertilizer sector and has encouraged participation of private entrepreneurs in its distribution networks. However, be-

---

[26] The savings mobilization activity was reinitiated beginning 1991 on a pilot basis in 3 CPMS.

[27] The fertilizer is often sold on credit to farmers. In 1990, 80% of the fertilizer was sold on credit through the CPMS (see Gai, 1991).

[28] The Village Responsibility System (VRS) was introduced in 1988, after the restructuring of the GCU. The VRS is based on village branch group lending system. Under VRS, each qualified village branch should form a committee of five members to screen individual member borrowers in the village, and to approve, disburse, supervise and recover loans from them. The purpose of the VRS is to incorporate the local decision making and credit disciplinary functions that exist in each village community into the loan programs to strengthen the management of the GCU (see Chapter III in this report for details).

cause of the lack of response from private entrepreneurs, the FAO assumed the role of an alternative fertilizer trade channel in 1988. While fertilizer importation was done by the GOG through Italian grants, wholesaling was done by the FAO during 1988 and 1989 in addition to the GCU. With the drying up of the Italian Grants and with the inability of private entrepreneurs to engage in fertilizer importation and wholesaling, the FAO also assumed the role of importer beginning in 1990. It imported fertilizer from Poland in 1990 and Senegal in 1991 using the trade connections of two RPEs, S. Madi in 1990 and Mukthara Ltd., in 1991.

To develop a well knit retail network of private entrepreneurs as retailers, the FAO established a Private Dealer (PD) network in 1988. A total of 36 PDs, including 10 women, were selected throughout the country to serve as primary retailers.[29] These FAO backed PDs formed a Private Dealers Association (PDA) in 1989. The set of primary retailers for the FAO is currently composed of 36 PDs in the PDA, 76 PDs serving nearly 5000 members of the Maize Growers Association (MGA), four Block Demonstration Villages (BD), two NGOs including Action Aid (AATG) and Women in Development (WID), and government programs such as Jahally-Pacharr rice development project (JP).[30]

A total of 11 PDs of which 5 are women were interviewed for this study. The majority of women PDs sold fertilizer, especially on credit, to women's kafos and farmers guaranteed by women's kafos, while men PDs were observed to sell fertilizer on cash and credit to men. In general, the women's kafos and women farmers were vegetable growers while men cultivated groundnuts. Whereas the PDs increased access to fertilizer, the majority of them were limited by their lack of business experience and limited transport and storage facilities. The reported low profit margins and slow fertilizer turn-over provided poor incentives and did not cover the retail operational costs of the PDs.[31]

AATG bought fertilizer from the FAO and distributed it to farmers in their service areas through kafos beginning in 1990. Interviews with a women's kafo in an AATG serviced village revealed that the AATG distributed fertilizer to the kafo as a grant. However, the kafo had to sell the fertilizer to its members at a kafo determined price and had to form a village level revolving fund for future purchases of fertilizer. The fund was collected and deposited by the AATG in a formal institution, and the AATG held signatory power over those funds until a total of 2000 Dalasis per household was reached. After attaining the 2000 Dalasis per household, the funds were deposited in individual beneficiary accounts with the banks, and the beneficiaries were allowed to draw on it for fertilizer purchase in future. In addition, individual men and women farmers in three sample villages

[29] The selection of the PDs was supposed to be based on their infrastructure facilities to store and distribute fertilizer, their ability to deal with formal financial institutions, and their reputation in the community.

[30] The PDA is currently composed of 36 PDs, MGA and 4 BD villages.

[31] See Chapter IV for further details on the sample PDs.

reported receiving fertilizer as interest free loans from the AATG for a period of six months with the condition that a village revolving fund be formed to purchase fertilizer in future.

The NGO, WID, supported by Women's World Bank, began operations in 1992. WID intends to expand the women PDs network of the FAO and use these agents as their retailers. The FAO has selected and trained 6 women PDs to act as retailers for WID in the 1992-93 production season in addition to the existing 10 women PDs. The WID program targets women kafos and women farmers engaged in rice, cereal, groundnut and vegetable farming.[32]

The Jahally-Pacharr rice development project obtains fertilizer from the FAO through the PDs operating in the MID-S division. The JP project then distributes the fertilizer to its members through village committees. The distribution is usually restricted to the growing of rice. The PDs of the MGA buy fertilizer from the FAO and distribute it among its 5000 members. The fertilizer used by demonstration farmers in four BD villages is directly supplied by the PDs operating in the neighboring areas.

iii) The GOG Channel (C3)

While the GOG was historically involved in fertilizer trading through parastatals before the ERP, its role in the present fertilizer sector is limited to a few government programs. Currently, the GOG through the Department of Agriculture is involved in fertilizer importation and wholesaling to support cotton growers and irrigation projects. The Cotton Development Project (CDP) and the Upper River Division Irrigation Project (URDIP) function as retailers to distribute fertilizer to farmers in project areas in MaCarthy Island and the Upper River Divisions.

iv) Registered Private Entrepreneurs (RPE) Channel (C4)

As noted above, the response to date from the RPEs to independently engage in fertilizer trading has been slow. The prospects of earning an acceptable long-term profit margin was too uncertain and subject to possible erosion due to unexpected government subsidized competition so that there has been reluctance to invest in the expensive wholesale function up to the present.

In 1990-91, a RPE, S. Madi enterprises, entered the fertilizer sector to assist the FAO in fertilizer importation.[33] The S. Madi firm used its trade connections and physical infrastructure to import 500 tons of urea from Poland and delivered it to the provincial depots used by the FAO. In the 1991-92 season, another RPE, Mukthara Limited, imported fertilizer for the FAO from Senegal. The use of the RPEs as agents by the FAO to aid in

[32] See Chapters II and IV for details on the WID program.

[33] The S. Madi enterprise primarily specializes in rice, oil, flour and textile trading.

importing and wholesaling was recommended by the Tripatriate Review Mission (TRM) in 1990. The TRM suggested a joint operation between the FAO and the RPEs at all levels of the fertilizer trade with FAO serving as a technical consultant and FAO revolving funds guaranteeing the RPE's trade operations.

The positive experience by the RPEs in the past two trading seasons and the absence of government intervention in the election year of 1992 has encouraged more RPEs to consider entering the sector. In fact, the FAO was recently approached by three Lebanese RPEs for technical assistance in the fertilizer trade including importation and wholesaling.[34]

v) Unregistered Private Entrepreneurs (UPE) Channel (C5)

The UPEs have always been an alternative fertilizer trade channel in The Gambia. They have been dynamic and their operations involve innovative trade procedures that are often considered illegal. Whereas the size and market share of the UPEs, and the trade and financial arrangements that facilitate their operations in the fertilizer sector are rarely documented, there is some evidence in the field of their active participation in the sector, especially through cross border trading with Senegal.

Informal interviews were carried out for this study with two UPEs who were not vertically or horizontally linked with each other in any trade channel. One was a fertilizer importer/wholesaler (hereafter UPE 1) and the other was a fertilizer retailer (hereafter UPE 2). While UPE 1 was primarily a wholesaler in rice, oil, sugar, cement, soap, etc., UPE 2 was primarily a retail operator dealing with the same commodities. UPE 1 imported urea from Senegal in 1991-92 and sold it to kafos and individual farmers in neighboring villages. UPE 2 bought urea and compound fertilizer from a UPE engaged in fertilizer importing/wholesaling, and sold it to individual farmers in two villages.[35] UPE 2 reported that his wholesaler imported urea from a UPE in Senegal using donkey carts through the countryside. Invariably, these two UPEs sold fertilizer only to those farmers with whom they had familial or long-term business relationships.

In addition, a limited quantity of fertilizer was available in local weekly markets (lumos) that meet adjacent to Senegalese borders. The Senegalese UPEs generally bring fertilizer to these Gambian markets and sell it to individual farmers or Gambian UPEs. An informal survey by the FAO stated that the fertilizer sold in the lumos is of low quality and often was underweight. The farmers interviewed for this study, however, claimed that the fertilizer was of good quality and was cheaper than the fertilizer sold by the FAO and the

[34] Informal evidence suggests that these RPEs control two thirds of the rice market in The Gambia and have one of the largest private networks in the country to move over 60,000 tons of rice annually within and outside The Gambia (refer to Chapter VIII in this report).

[35] This fertilizer wholesaler also functions as a rice and oil wholesaler for UPE 2 since 1986.

GCU. For instance, the price of urea was D 90/50 Kg. in lumos compared to D 135/50 Kg at FAO retailers in the 1991-92 season. Furthermore, urea was not available in the GCU network of CPMS during the 1991-92 season.

vi) Consumers

The farmers interviewed reported that they generally purchased their fertilizer either directly from primary retailers or from secondary retailers such as village branches of CPMS and kafos.[36] The source of fertilizer supply reported by farmers was influenced by the gender of the farmer, the type of crops grown, and the price and convenience offered by the various sources. Indeed, market segmentation was indicated by the observed source of fertilizer among various types of farmers. While the GCU was the major supplier of fertilizer to groundnut farmers, FAO women PDs were the principal suppliers to women and vegetable farms. Government programs were the primary suppliers of fertilizers to specific crops in their service areas despite the presence of various other supply sources. For example, the Jahally-Pacharr Rice Development project was the primary fertilizer retailer for rice farmers in the MID-S division, and the Cotton Development Program and the Upper River Irrigation Project were the major suppliers to cotton farmers in the Upper River Division. In general, FAO traders were active in villages that did not qualify for GCU fertilizer loans, and Action Aid was active in 2 villages that did not qualify for GCU and FAO trader loans.[37] Therefore, in spite of the post ERP expansion of fertilizer marketing channels, because of this segmentation there is little significant evidence of multiple sources of fertilizer available for a farmer in a given village.

A nationwide survey conducted by NASS covering 666 dabadas in 222 villages indicates that traders were a more frequent source of fertilizer supplies for groundnut farmers than was the GCU (Table VII-9).[38] This result seems to be at odds with the reported source of fertilizer in the villages we sampled. While the comparability between this study and the NASS study is limited, the wide differences in the two sets of observations indicate some intervillage differences that need to be examined further.

In general, while the farmers interviewed in this study were appreciative of the timely availability of fertilizers, they reported a concern about high fertilizer prices. Indeed, the

---

[36] This section is based on the informal interviews conducted for this study with groups of farmers from 14 villages across the country. Since no structured questionnaire was used to quantify the details, the broad observations made here need to be interpreted with caution.

[37] The secondary status of FAO traders compared to GCU was due to the lower fertilizer prices offered by GCU during 1991-92 season.

[38] Dabada in Mandinka means an agricultural production unit. It is composed of all male members of a compound who pool their resources to farm or raise livestock. In general, members of extended families live within an enclosed compound. A compound also accommodates strange farmers (migratory labor attached with farms cultivated by the dabada) (see Judith Carney, 1990 for details).

declining value cost ratio reported in Table VII-1 was stated as one of the major reasons for the reduced use of chemical fertilizers in groundnut cultivation by the farmers. The majority of the groundnut farmers sampled reported that they used less than one third of the recommended dosage of chemical fertilizer in 1991-92. About half of these groundnut farmers, however, reported complementing chemical fertilizers with farm-yard manure. The NASS survey results confirm the above observations. Table VII-10 shows that only 11 percent of the groundnut area was fertilized in 1991-92 compared to 15 percent in 1990-91.[39] The NASS data comparing 1990 and 1991 results suggested that the use of manure in groundnut cultivation was on the increase (Table VII-11). This trend could be due to the increase in chemical fertilizer prices.

b.) Competition and Collaboration among Trade Channels

Although there is a proliferation of fertilizer marketing channels, there is currently limited competition and coordination among them. It is important that the increase in trade channels be accompanied by increased competition and collaboration among the alternative channels in order for farmers to have a timely access to fertilizer. While existing trade channels tend to compete for market shares, it is not clear if they are sustainable in the presence of low fertilizer demand. Competition is often undermined by differences in social and economic objectives of the participants that introduces negative externalities into the system. For example, the targeting of fertilizer to women by WID and the distribution of fertilizer as a grant by the AATG has created artificial credit rationing and market segmentation in the sector rather than a healthy market driven competition among sources for the same clients.

There is, however, a limited amount of collaboration among the participants that helps exploit scale economies and comparative advantages to improve market efficiency. Scale economies can be realized at the importation level through lower surcharges and through the use of the local infrastructure to full capacity at the wholesale and retail levels. The use by the FAO of the RPEs infrastructure to import fertilizer with fewer bureaucratic delays is a step in the right direction. At the same time, the FAO establishment of retail level linkages through NGOs and RPEs removes the need for these smaller agents to import small quantities of fertilizers at high costs. It is also important to improve the coordination among various channels related to the financial arrangements used for the fertilizer trade. The next section discusses the nature of these financial arrangements.

---

[39] The figures in table 11 need to be interpreted with caution. There are obvious differences in these figures due to various sources. The FAO, 1992, reports that 60% of area under groundnuts was fertilized in 1991-92 season. The differences underscore the lack of standard procedures in measuring the fertilizer use in The Gambia and the lack of reliable data on the fertilizer sector.

c.) Financial Arrangements

The terms and conditions of the financial arrangements that facilitate the flow of fertilizer through the various trade channels are summarized in Table VII-12. The terms and conditions of these financial contracts are influenced by the source of the finance and the economic objectives of the agents involved.

i) The GCU Channel

The GCU fertilizer trade activities have been financed by ADP II grants since 1984 in addition to the GPMB and the GCDB. In 1988, the GCU was privatized and the GCDB and the GPMB ceased to be creditors.[40] A revolving fund was established through ADP II grants to finance fertilizer imports and wholesaling, and the credit activities of the GCU at the retail level through the CPMS.[41]

The GCU has been the only source of finance for the retail operations of its CPMS network which in turn has traditionally been the major retail supplier of fertilizer through short-term credit to farmers.[42] The GCU provided fertilizer to all affiliated CPMS irrespective of previous loan repayment performance until 1989 which led to poor repayment performance and erosion of the revolving fund. Therefore, strict procedures were implemented in the 1989-90 trade season to streamline the GCU's credit operations. GCU fertilizer credit was extended only to CPMS that recorded a 95 percent recovery rate on current loans from their clients, and to village branches that recorded a 95 percent recovery rate in current loans and loans in subsequent years from their member clients. A village branch lending system that shifts loan disbursement and loan recovery responsibility to village branches was implemented in 1988 on a pilot basis in five CPMS that qualified based on the 95 percent rule to improve GCU's management. This approach was extended to all qualified CPMS in 1989. In the 1991-92 trade season, of the 54 CPMS that were registered to perform groundnut buying activities, 43 CPMS, covering 518 village branches qualified for fertilizer loans from the GCU. Since the majority of the CPMS do not have their own funds to purchase fertilizer from the GCU on cash and since the bulk of the fertilizer distributed to consumers was on credit, the unqualified CPMS ceased fertilizer retailing. The CPMS on-lent fertilizers to qualified village branches that in turn functioned as secondary retailers to distribute fertilizer as 100 percent in-kind loans to farmers.

---

[40] All GCU loans outstanding with the GCDB prior to 1988 were paid by the government.

[41] It was difficult to obtain exact data on the volume of funds utilized by the GCU for the fertilizer trade in 1991-92. An amount of 8 million dalasis was reported from GCU's fertilizer trade operations in 1991 to be outstanding with ADP II revolving funds. Of this amount, roughly D 3.5 million were recovered by GCU from CPMS in 1991. Therefore, in the absence of other sources, it is expected that D 3.5 million may have been used for financing GCU's 1991-92 fertilizer operations.

[42] Nearly 80% of the fertilizer was sold on credit by 43 CPMS in the 1991-92 agricultural season (FAO, 1992).

ii) The FAO

The FAO operation at the importation and wholesaling level is financed by a revolving fund established in 1988 through grants from the Danish Government. The Danish grants provided the seed money for the FAO to purchase fertilizer auctioned by the GOG in 1988. The FAO bought 2,000 tons of fertilizer at D5/50 Kg. and sold it through the PDA at D 70 per 50 kg to establish the revolving fund.[43] The revolving fund has been used since then to finance the importation, wholesaling and retailing operations through the FAO channel. In the 1990 and 1991 trade seasons, the FAO used the two RPEs of S. Madi and Mukthara Ltd. as agents to import fertilizer. The RPEs financed their imports and delivery to provincial depots through lines of credit from commercial banks in London. The FAO revolving fund was used as a 100 percent guarantee to obtain the line of credit from the RPE's off-shore financiers who paid the fertilizer suppliers.[44] This experience provides evidence that guarantee funds may help to induce more private sector participation in the fertilizer trade at the wholesale level and to encourage domestic banks to become actively involved in financing fertilizer marketing operations.

At the primary retail level, the PDs and MGA receive fertilizer on credit from the FAO at an 18 percent annual interest rate payable to the revolving fund. The AATG buys fertilizer on cash from the FAO through grants from England, while WID uses interest free loans from WWB and the JP project uses foreign grants to procure fertilizer on cash from the FAO to distribute to their clients.

At the secondary retail level, the PDs can choose to extend fertilizer loans or sell on a cash basis to their final customers. The men PDs, in general, extend fertilizer credit to the majority of their clients. The majority of the women PDs sell fertilizer on cash and extend credit on a selective basis to women's kafos and women farmers guaranteed by women's kafos. While the explicit interest was 18 percent per year, the PDs were allowed to mark-up the retail price to realize profits. In general, the price of fertilizer sold on credit was higher than the price of fertilizer sold on cash. The mark-up contributed to about 5-10 percent of profit margins on cash sales but varied based on loan repayment performance for sales on credit. The AATG distributed fertilizer as a grant to kafos in their service areas. However, the kafos had to sell the fertilizer to their members at a kafo determined price and form a village level revolving fund for the future purchase of fertilizer. The AATG intends to charge an annual interest of 12 percent to kafos beginning in 1992-93. The JP and CDP projects charge 11 percent per year to their consumers.

---

[43] The fertilizer was auctioned off by the GOG to liquidate huge stocks carried over from the Italian grants in 1986.

[44] See Figure IV-1 in Chapter IV for details.

iii) GOG

The GOG operations are generally financed through external grants.

iv) RPEs

The RPEs involvement in the fertilizer sector is fairly recent and is in collaboration with the FAO. In the 1990 and 1991 trade seasons, the FAO used two RPEs, S. Madi and Mukthara Ltd., to import fertilizer. The RPEs financed their imports and delivery to provincial depots through lines of credit from commercial banks in London. The FAO revolving fund was used as a guarantee to obtain the line of credit.

v) UPEs

Our interviews with the UPEs revealed that generally they are self financed or obtain funds through informal credit markets to conduct their trade operations. A limited amount of trader finance through UPE wholesalers is available. Price markups instead of explicit interest are used to finance these operations. The UPEs extended credit only to their long-term clients and charged an implicit interest rate of 18 percent for 6 months.

vi) Final Consumers

The majority of farmers interviewed reported that they purchased fertilizer on credit from the GCU followed by the FAO, government programs, the NGOs and informal sources.[45] The terms and conditions, however, varied with the source of fertilizer. In general, loans were taken for a period of six months with no down payment or explicit collateral requirements. However, the GCU implicitly linked its loans with groundnut marketing, and women PDs from the FAO required guarantees from kafos. While the GCU charged an annual interest of 21 percent, the PDs from FAO charged 18 percent, and the Jahally-Pacharr rice development project charged 11 percent. A limited amount of inter- and intra-household borrowing of fertilizer based on reciprocity was also observed.

The above discussion indicates the emergence of segmented markets due to variations in the terms and conditions used to finance fertilizer at the retail level. The government and NGO channels offer below market interest rates on loans in contrast to the FAO-PDN and GCU network which has tried to meet a market standard. Therefore, there is no level playing field here and this will likely delay the emergence of a full blown private fertilizer sector in The Gambia.

---

[45] Very few sample farmers reported buying chemical fertilizer for cash or for a small down payment, perhaps because they had the option of using credit. In the absence of any credit, it is likely that the number of farmers buying fertilizers on a cash basis would rise substantially if yield response and prices are favorable.

IV. CONSTRAINTS ON THE DEVELOPMENT OF THE FERTILIZER SECTOR

The policies and programs of the Gambian government during the last two decades have contributed to a dramatic expansion in the use of and demand for fertilizer. The liberalization of the fertilizer sector with the implementation of the ERP has resulted in an increase in the channels for fertilizer distribution. There are no formal barriers to entry on the supply side so new entrepreneurs can enter and compete in fertilizer marketing. As a result, the sector currently includes multiple supply channels that compete and collaborate with each other at various stages in the importation and distribution of fertilizer.

Serious problems exist in the sector, however, and the country does not yet have an efficient, reliable fertilizer marketing system that can provide wide access to fertilizer. The purpose of this section is to summarize the current major strengths and weaknesses of the system, and identify the most important constraints that limit development of the sector.

1. Strengths and Weaknesses of the Current System

The strengths and weaknesses of the various fertilizer distribution channels are summarized in Table VII-13. On the positive side, the supply system is fairly well developed with the network that includes the widespread GCU system and the FAO sponsored PDs. The physical infrastructure for transporting and storing fertilizer exists at the wholesale and retail levels in this network. Linkages have been developed for the importation of fertilizer stocks. There appears to be a significant number of farmers that have had some experience with fertilizer use and are potential customers for a privatized fertilizer sector.

There are substantial weaknesses in the current system, however, and some of them present formidable challenges for the future development of the sector. The first is the fairly small total fertilizer demand in the country. Five thousand tons of fertilizer nutrients represents a small market, and it was reported that few foreign sources of fertilizer want to bother with the small volume of exports required to satisfy total demand. The domestic distribution system is still inadequate. The GCU and the NGOs have the desire, but not the capacity at this time, to provide a large number of farmers with a regular fertilizer supply. The private sector also faces problems. For the several reasons discussed below, it is difficult to clearly estimate future demand under a completely privatized system. The uncertainties about the future role of the GCU, the government, and the donors create an unfavorable environment for private traders to enter the sector and develop the infrastructure and distribution network required for full privatization. The possibilities of local financing for fertilizer imports and distribution are uncertain, given the situation of the financial system as described in Chapter I. Whereas private traders can access off-shore

financing for importing rice, sugar and textiles,[46] the fertilizer trade has been dependant on grants, not loans. Moreover, the difficulty in loan recovery experienced by the GCU and the FAO PDs demonstrate that these channels have not yet developed adequate expertise to make and recover fertilizer loans. Therefore, while domestic banks have financed groundnut trading, they have been reluctant to finance the fertilizer trade. Therefore, whereas government failure during the past few years led to the need to privatize the fertilizer sector, market failure now impedes the full development of a privatized system. With the drying up of foreign grants, it is essential to encourage a more active role for private entrepreneurs and to analyze the possible financial and other constraints that impede their full participation. The following section outlines some of these constraints.

2. Constraints Faced by Private Entrepreneurs

The constraints faced by private entrepreneurs can be summarized as (1) difficulties in predicting fertilizer demand, (2) questionable profitability of the fertilizer business due to difficulties in achieving economies of scale and scope, and (3) financial constraints.

A. Problems in predicting fertilizer demand

An important problem facing anyone interested in fertilizer in The Gambia is the difficulty in forecasting future demand because past usage is a poor predictor of the future. Private entrepreneurs respond to market signals. Their success depends on their ability to forecast market demand and identify opportunities to make an investment and generate a profit in that market. However, fertilizer demand in The Gambia is quite unpredictable for several reasons.

The past consumption of fertilizer under a system of heavy government intervention does not provide a good base from which to predict future demand in a privatized system. Fertilizer demand has been manipulated through price subsidies and grants, and has not had to adjust to market signals. The data presented on fertilizer consumption show no clear patterns of demand relative to fertilizer prices, so there is little validity in predicting demand based on past market trends. Indeed, there is no study that really measures fertilizer demand in The Gambia. Static estimates that do not incorporate risk and uncertainty have led to overestimates of fertilizer demand. For instance, the FAO estimated a requirement of 24,000 metric tons of chemical fertilizer for the 1991-92 season based on the estimated area under cultivation and the assumption that 80 percent of the farmers use at least 60 percent of the recommended dosage of chemical fertilizer. However, only 2,190 tons of chemical fertilizer were sold through the GCU, FAO, GOG and RPEs networks in 1991-92 (FAO report, 1992). The low fertilizer consumption was assumed to be due to declining

[46] See Chapter VIII in this report.

agricultural profitability that resulted in an upward shift in the demand for manure and a downward shift in the demand for chemical fertilizers.

The future demand for fertilizer by farmers will depend on four variables: 1) fertilizer prices, 2) the yield response of current and future varieties to fertilizer applications, 3) crop prices, and 4) financial terms and conditions for buying fertilizer. Furthermore, farmers must make their decisions about fertilizer adoption while facing three sets of uncertainties: 1) uncertainty about production conditions, especially rainfall, 2) uncertainty about market trends in fertilizer and crop prices, and 3) uncertainties about future government and donor policies and programs that may affect fertilizer supplies and prices, credit availability and cost, and access to product markets.

a.) Fertilizer prices and subsidies

Future prices are unknown but the government is committed to reduce and/or eliminate subsidies. The prices reported in Table VII-6 after 1987 give an indication of how fertilizer prices rose when subsidies were removed. The value cost ratios presented in Table VII-1 also give an indication of how declining price ratios will discourage fertilizer consumption if the price trend continues.

b.) Yield response

A complete analysis of this issue is beyond the scope of this study but some uncertainties encountered in our research need to be discussed. The FAO data in Table VII-1 based on fertilizer demonstration plots show a significant, though declining, return from fertilizer use on several crops, presumably due to price changes rather than a decline in yield response. If these data are indicative of farm level response, it would be logical to expect a correlation between the wide swings reported in Table VII-3 in fertilizer consumption and average crop yields reported in Table VII-14. However, no such correlation seems to exist. How can this apparent discrepancy be explained?

First, there may be considerable problems with the quality of the data that are unknown to us. Second, the large subsidies of a few years ago may have encouraged the overuse of fertilizer so that some recent cutbacks can be absorbed with little effect on yields. Third, there may be enough carry-over of nutrients so that reductions in application are not immediately translated into yield declines. Fourth, the percentage of farmers regularly using fertilizer may be much lower than is believed, as suggested by the NASS data in Table VII-10, so that the wide usage of manure as reported in Table VII-11 may be relatively more important than fertilizer in explaining yields. This implies that there are many factors that may mask the impact of fertilizer use when analyzing aggregate yields. Fifth, the preoccupation with groundnuts in the country may cause analysts to overlook the important shifts in cropping that have occurred and the role that fertilizer may have played in these shifts. The data in Table VII-14 show fairly significant increases in harvested area for maize, and early and late millet in recent years, in contrast to a stagnant or perhaps slight decline in the

harvested groundnut area. If this new crop area is on land with marginal fertility, the large frequency of fertilizer use reported for these crops in Table VII-11 may have served to maintain rather than increase average yields.[47] Sixth, the yield response on groundnuts may have deteriorated if as reported the quality of seed has declined in recent years.

Although we cannot answer the questions of yield response, the substitutability of manure, and the trends in usage of this fertilizer substitute, they demonstrate part of the problem faced in projecting demand. If in fact yield response is low, future fertilizer demand will be low in a privatized system operating without subsidies. Furthermore, our impression is that The Gambia does not have the type of agronomic research system that is likely to discover or adapt varieties in the near future that are likely to be more fertilizer responsive.

c.) Groundnut prices

The analysis presented in previous chapters outlined the problems faced in the groundnut sector, including the issue of cross border trade with Senegal. The ability of the government to resolve the several problems of this sector will have a significant impact on demand for fertilizer since this important crop still represents the largest amount of crop area.

d.) Credit for fertilizer purchases

There are no data available to document how many farmers regularly obtain fertilizer on credit. The impression is that few farmers pay 100 percent cash for fertilizer. Furthermore, some of the fertilizer loans have been provided at zero or low interest rates. The delinquency and default rates that appear to exist in the CPMS and FAO PD networks, coupled with past loan writeoffs, suggest that many loans were converted into grants through nonrepayment. Unquestionably, a privatized system will be reluctant to provide as much credit for fertilizer either through bank loans to farmers or through fertilizer sales on credit by retailers. Furthermore, both banks and retailers will have to charge higher rates and will have to do a better job in loan recovery if the fertilizer system is to become self-sustaining. These changes will affect fertilizer consumption in two ways for farmers who lack liquidity to pay cash for their inputs: the effective cost of fertilizer will rise for creditworthy farmers who will continue to qualify for loans, while some farmers will reduce their purchases because they will no longer qualify for credit.

e.) Uncertainty about government and donor programs

The past heavy involvement in the fertilizer sector creates uncertainty in the private sector today. Although the government appears to be moving out of fertilizer importation and distribution, private entrepreneurs reported their suspicion about the probability of the

[47] See Appendix VII-4 for fertilizer recommendations and requirements for various crops.

government and donors permitting the private sector to be solely responsible for the fertilizer trade. The private sector is concerned that any perceived fertilizer shortages or high prices would cause panic so that subsidized fertilizer would be imported and dumped into the market after private traders had invested in their fertilizer imports' and distribution systems.

B. Profitability of the Fertilizer Trade

a.) Economies of scale and profitability

The difficulty in predicting demand complicates any estimation of total market size and the optimal number of firms needed in the sector to achieve economies of scale from the fertilizer trade.[48] Consequently, incomplete information about aggregate market size, possible number of competitors, and market share leads to uncertain estimates of profitability for any participant in the fertilizer sector.

b.) Economies of scope for existing trading firms

The existing private entrepreneurs already engaged in trading other commodities (such as those discussed in Chapter VIII that import rice, cooking oil, and flour) would be obvious candidates to enter the fertilizer trade. Since they already have international trade linkages, have experience in importing, have facilities and wholesaling/retailing networks, and have some equity capital and access to credit, it is possible that they would experience economies of scope by adding fertilizer to the commodities they sell. Economies of scope exist when one multiproduct firm can more cheaply provide a product or service than another firm that specializes in it. The ability to realize economies of scope through product diversification would then become a barrier for new firms to enter the fertilizer sector.

Economies of scope are achieved through reduced costs due to product complementarily. The recent participation in the FAO fertilizer market by importers of food commodities suggest that these firms may already perceive that there are product complementarities by expanding into fertilizer. But the capacity of these firms to include fertilizer within the set of products currently being sold may be limited by the special characteristics of the fertilizer sector. These are discussed in greater detail in Chapter VIII but are highlighted here. As discussed above, the volume of total domestic fertilizer demand is small and the reexport trade has been insignificant. The volume of other commodities these traders sell is quite large, however, due in part to their large reexport trade. Furthermore, the sales turnover is much faster and there are few domestic substitutes that customers can turn to if prices of these basic food commodities rise. These traders currently finance many of their

---

[48] Anecdotal evidence suggests that at current market prices a minimum of 500 metric tons of fertilizer needs to be imported per transaction because (i) surcharges levied on shipping declines with increases in quantities imported, (ii) costs involved in producing/mixing the type of compound fertilizer consumed in The Gambia (8-24-24) declines with increases in quantitites produced. Based on the above estimates, the fertilizer sector allows for very few firms in the market since the fertilizer consumption in 1991-92 was about 2190 tons.

commodity imports through short-term letters of credit obtained offshore but, as discussed below, financial arrangements for the fertilizer sector may have to be different.

c.) Barriers to entry for new firms

For new entrepreneurs not currently engaged in commodity trading, entry into the fertilizer trade is constrained by high fixed costs involved in building a physical infrastructure and distribution system in the face of great uncertainty about demand, government and donor policies, and access to finance. Even though competition may be greater, the business prospects for beginning to trade consumer goods may appear more profitable and less risky, especially for entrepreneurs with limited capital and business experience.

C. Financial constraints

a.) Offshore fertilizer loans

As described in Chapter VIII, the existing large scale food commodity traders use offshore financial facilities to finance their imports, but this has not been the case with the fertilizer trade. Fertilizer trading requires relatively longer term loans and involves a slower turnover commodity compared to food commodities. Therefore, the typical offshore suppliers who usually offer 30 to 90 day letters of credit would need to devise appropriate financial instruments that match the term structure required in fertilizer trading.[49] It is not clear if the reputation built up by existing traders with their offshore creditors is transferable to other offshore lenders that may specialize in financing the fertilizer trade, or if these offshore financial sources are accessible to new Gambian entrants into the fertilizer sector. If not, alternative sources of finance would need to be found among domestic banks.

b.) Making retail loans for fertilizer

The financial technology required to facilitate fertilizer retail lending needs to be developed in The Gambia and cannot be a simple duplication of the methods used to finance trading of other commodities. Both the existing commodity traders and any new entrants into the fertilizer trade need to recognize the differences between trading fertilizer and food commodities. Fertilizer trading requires longer term loans (six to nine months for the typical crop season) than made for food commodities and involves higher lending risks due to production and policy uncertainties. Longer term loans increase moral hazard problems for the creditors (i.e. borrowers engage in unsound business practices after receiving a loan) at the farmer/consumer level. By granting shorter term supplier credits and having frequent contact with their customers because of the high sales turnover of other

[49] For instance, the two private food importers of Mukthara and S. Madi enterprises used the FAO's revolving funds as a guarantee to obtain offshore loans to finance fertilizer imports for FAO. They, however, did not engage in wholesale and retail distribution for the FAO, perhaps due to their lack of access to offshore financing for a longer period of time.

commodities, food traders are able to more easily monitor the loans made and avoid loan losses. For the fertilizer trade, the traders need to develop lending procedures that will permit them to screen their borrowers better and that will ensure good loan repayment for longer term loans. This may require designing appropriate incentives and penalties to discourage loan nonrepayment. It may also involve developing input-product linkages or other types of interlinked contracts frequently found in Asia to reduce information problems and enhance borrower screening. This type of interlinkage may already exist for some PDs that sell fertilizer along with basic food commodities to their clients. The borrowers of fertilizer loans may be more inclined to repay if they face a cutoff in their supply of food commodities when they fail to repay their fertilizer loans. Interlinkages may also exist when crop buyers sell fertilizer on credit to farmers with the condition that the loan amount is automatically deducted from the crop proceeds. One of the problems that traders face in The Gambia is that either they do not engage in crop trading so they cannot develop these interlinkages, or when they do buy crops they cannot be assured that farmers will actually deliver their crop to them. Other buyers (including the Senegalese) may offer better prices or farmers may choose to sell to other buyers precisely to avoid loan payment.

c.) Cost of borrowed funds

The comparative cost of borrowed funds influences entry into the fertilizer sector and the nature of the competitive conditions that will emerge. Entrepreneurs that can borrow more cheaply have a cost advantage compared to their competitors. As is shown in the Chapter VIII, the large private food commodity importers possess good collateral and have access to cheaper offshore sources of loans. This is not the case for medium and small scale or new firms that have to rely on the more expensive domestic financial market because they have not established their creditworthiness. Furthermore, the informal financial markets are better equipped to make small short term high interest consumption loans that are expensive for business ventures. These financial barriers to entry into the fertilizer sector need to be addressed in order to strengthen the privatization program.

V. CONCLUSIONS AND RECOMMENDATIONS

This chapter examined the evolution of the fertilizer sector in The Gambia from the early 1970s up to the present. Two points stand out in this analysis: fertilizer consumption increased dramatically up to the mid 1980s, then stagnated; and the marketing channels have become more complex and diverse. Although the private sector has played a more prominent role in recent years, the country is a long way from having a reliable self-sustaining privatized fertilizer sector that provides regular access to a large number of farmers. It is difficult to forecast or proscribe the future configuration of the sector given the large number of developments that are taking place in restructuring groundnut processing and marketing, in restructuring and strengthening the GCU (see Chapter III), in the rapid expansion of the NGOs (see Chapter II), in restructuring the FAO dealer network (see

Chapter IV), and in the efforts of the government and the donors to create a more vibrant private sector.

A more prominent role for the private sector is not likely to develop because of the implementation of some governmental plan or program for fertilizer.[50] Rather it is likely to occur through trial and error by private businessmen attempting to make a profit in an uncertain environment. The government and donors need to identify the few strategic actions they can take to facilitate the process of change, then step back and monitor developments. There appear to be four sets of activities that can be undertaken to facilitate privatization of the fertilizer sector. They are identified and briefly described below.

- Make a clear commitment to get the government, donors and NGOs out of the business of importing and distributing fertilizer.[51] Private entrepreneurs will not undertake risky and expensive investments if they think that they might be destroyed by the unexpected dumping of cheap fertilizer into the market as can occur when a well-intentioned donor panics because of supposed inadequate supplies or high prices. Occasional shortages and high prices need to be expected as a privatized fertilizer sector works out the wrinkles in importation and distribution. The private sector is likely to "sit on the sidelines" until it is certain of the commitment to privatize the sector. So far, the entrepreneurs are not yet convinced enough to risk investing large amounts of their own capital.

- Improve the yield response of important crops. The uncertainties surrounding yield response that were discussed above need to be clarified. If, as appears to be the case, yield response is low for many crops, then the problems need to be identified and solved. In a regime with reduced fertilizer subsidies, a necessary condition for fertilizer use is that the yield response must be high enough to compensate for production and marketing risks. This is a logical task for donors to undertake because they have ready access to foreign scientists and research centers with the expertise to deal with the problem.

- Improve product pricing and access to markets. This is a large topic and is beyond the scope of this study. Suffice to say that completion of the reforms of the groundnut sector and any other action that improves access to markets and the prices received by farmers will stimulate fertilizer demand and improve the conditions for privatized fertilizer trade.

- Stimulate domestic lending to the fertilizer sector with a guarantee fund for fertilizer loans.[52] The analysis presented in Chapter I demonstrated that there are substantial resources in the domestic banks to finance the fertilizer sector. As the private demand for fertilizer loans begins to expand, however, the learning process that the domestic banks will

---

[50] Chapter IV includes a discussion about the possible future role for the government in the fertilizer sector.

[51] See Chapter IV for a further discussion of this issue.

[52] A more complete discussion of a guarantee fund is presented in Chapter IV.

have to go through in serving this sector may be accelerated by a guarantee fund that reduces the risk to the bank of incurring a loss due to a bad fertilizer loan. The liquidity of the banks eliminates the justification for donor funds for on-lending but foreign resources could play a strategic role in sharing the risk and expense of operating the guarantee and thereby reduce the financial constraints that private sector firms may face.

REFERENCES

Boomgard, James J., Stephen Davies, Steve Haggblade, and Donald Mead, "A Subsector Approach to Small Enterprise Promotion and Research," World Development, Vol. 20, No. 2, 1992.

Boomgard, James J., Stephen Davies, Steve Haggblade, and Donald Mead, "Subsector Analysis: Its Nature, Conduct and Potential Contribution to Small Enterprise Development," East Lansing: Michigan State University International Development Working paper No. 26, 1986.

Carney, Judith, "Struggles Over Land and Crops in an Irrigated Rice Scheme: The Gambia," in Agriculture, Women and Land, Boulder: Westview Press, 1988, pp. 59-78.

Clark, R.H., "A Study of Agricultural Credit Operations of the Cooperative Movement in The Gambia," Geneva: International Labor Organization, 1987.

Gai, Baboucar, "Policies, Organization and Operation of the Gambia Cooperative Union," Presented at the Central Bank Training Workshop on Rural savings and Credit and Support Service Organizations, Policies, Procedures and Management, Sep. 9-20, 1991.

Makken, F., "Alleviating Fertilizer Policy Constraints to Incrased Fertilizer Use and Increased Food Production in West Africa," Fertilier Research, Vol. 29, No. 1, 1991.

Nabli, Mustafa K., and Jeffrey B. Nugent, "The New Institutional Economics and Its Applicability to Development," World Development, Vol. 17, No. 9, 1989, pp. 1333-47.

Shipton, Parker, "The Rope and the Box," in Informal Finance in Low-Income Countries, Dale W Adams and Dale Fitchett (eds.), Boulder: Westview Press, 1992, pp. 25-42.

FAO, "Report of the Consultancy on Fertilizer Procurement, Distribution Startegies and Pricing Policies in The Gambia," Rome: FAO, 1992.

FAO, "Private Dealers Network," Cape Mary: Agricultural Inputs Office, 1991.

GCU, "Report of the General Manager," Presented at the General Meeting at Monsa Konko, Nov. 12-14, 1991.

von Braun, J., Kenneth Johm, S. Kinteh and D. Puetz., "Structural Adjustment, Agriculture and Nutrition: Policy Options in The Gambia," IFPRI Working papers on Commercialization of Agriculture and Nutrition, No. 4, p. 80, 1990.

Table VII-1 Productivity and Value Cost Ratio of Fertilizer Use on Major Crops, 1985 and 1991.

Crops	Production (Tons/Ha)		Value Cost Ratio[1]	
	Without Fertilizer	With Fertilizer	Based on 1985 Prices	Based on 1991 Prices
	(1)	(2)	(3)	(4)
Groundnut	1.27	1.64	8.5	2.5
Maize	1.17	2.09	2.9	2.3
Early Millet	1.09	1.88	4.1	2.9
Sorghum	0.97	1.52	2.7	2.8
Rice (Upland)	1.09	2.04	5.4	1.4

Source: FAO.

Note 1: Value Cost Ratio (VCR) is calculated as a ratio of the value added with fertilizer use relative to the cost of fertilizers. Data are based on experimental trials.

Table VII-2 Number and Type of Participants Sampled, by Location in the Fertilizer Marketing Chain.

Marketing Level		Participants			
		Participant type	Name of Participants/Type of Institution	Population Size	Sample size
I.	Importers and Wholesalers	International Agency	Food and Agricultural Organization (FAO)	1	1
		Privatized Cooperative	Gambia Cooperative Union (GCU)	1	1
		Government of the Gambia (GOG)	Department of Agriculture	1	1
		Registered Private Entrepreneurs (RPEs)	Mukthara Ltd. and S. Madi	2	2
		Unregistered Private Entrepreneurs (UPEs)	Confidential	NA	1
II.	Retailers	RPEs	Private Dealer Network (PDN) with 36 members	1 (36 members)	12 members
		Non-governmental Organizations (NGOs)	1. Action Aid, The Gambia (AATG) 2. Women in Development (WID)	2	2
		Government Programs	Jahally-Pacharr Rice Development Project (JP)	1	1
		Cooperative Societies	1. Cooperative Produce Marketing Societies (CPMS)	54	12
			2. Women's Horticultural Societies (WHS)	2	1
		UPEs	Confidential	NA	1
		Informal Farmer's Groups (IFG)	kafos	NA	8
III.	Consumers	Farmers	Groups of Farmers	NA	13

NA : Not available

Table VII-3 Fertilizer Consumption in The Gambia, 1972-90.

Year	Consumption Nutrients (tons)			Total
	N	P205	K_2O	
	(1)	(2)	(3)	(4)
1972	69	348	-	417
1973	220	540	-	760
1974	219	708	-	927
1975	141	659	-	800
1976	575	1226	-	1801
1977	700	1549	-	2249
1978	494	1110	-	1604
1979	1033	1953	-	2986
1980	1355	2520	135	4010
1981	1440	1940	135	3515
1982	935	1340	140	2415
1983	1370	1600	60	3030
1984	1765	2570	225	4560
1985	610	705	470	1785
1986	825	685	135	1645
1987	595	690	425	1710
1988	685	1245	135	2065
1989	1626	1198	1051	3875
1990	1132	897	897	2926

Source: FAO, 1992.

Table VII-4 **Profile of Fertilizer Agents by Marketing Levels during Pre and Post Economic Recovery Program (ERP) Periods.**

Years	Trade Functions			
	Importer	Wholesaler	Primary Retailer	Secondary Retailer
	(1)	(2)	(3)	(4)
		Pre ERP		
1974-1985	1. GPMB 2. UPEs	1. GPMB 2. UPEs	1. GCU 2. UPEs	1. CPMS 2. Kafos
		Post ERP		
1986-87	1. GOG: Italian Grants 2. UPEs	1. GPMB 2. UPEs	1. GCU 2. UPEs	1. CPMS 2. Kafos 3. Government Programs
1988-89	1. GOG (Italy)[1] 2. UPEs	1. GCU 2. FAO 3. UPEs	1. CPMS 2. PDN 3. NGO: Action Aid 4. Government Programs 5. UPEs	1. Village Branches of CPMS 2. Kafos
1990	1. FAO (Poland) 2. GOG (Italy) 3. RPEs 4. UPEs	1. FAO 2. GOG 3. GCU 4. UPEs	1. PDN 2. Government Programs 3. CPMS 4. NGO: Action Aid 5. UPEs	1. Village Branches of CPMS 2. Kafos
1991	1. FAO (Senegal) 2. GCU (Senegal) 3. GOG (Senegal) 4. RPEs (Senegal) 5. UPEs	1. FAO 2. GOG 3. GCU 4. RPEs 5. UPEs	1. PDN 2. Government Programs 3. CPMS 4. NGO: Action Aid 5. UPEs	1. Village Branches of CPMS 2. Kafos

Source: GCU, FAO, AATG.

GPMB: Gambia Produce Marketing Board; GCU: Gambia Cooperative Union; FAO: Food and Agricultural Organization; GOG: Government of the Gambia; RPE: Registered Private Entrepreneurs; UPE: Unregistered Private Entrepreneurs; NGO: Non-Governmental Organizations; PDN: Private Dealers Network

Note 1: Name of the country from where fertilizer was imported is given in parenthesis.

375

Table VII-5 Volume of Fertilizer Imported into The Gambia, Pre and Post ERP, by Participant and Fertilizer Type, 1980-1991.

Years	Participant[1]	Fertilizer Type			
		SSP[2]	Compound[3]	Urea	Total
	(1)	(2)	(3)	(4)	(5)
		(in Metric tons)			
			Pre ERP		
1980	GPMB	6960	4385	148	11493
1981	GPMB	7200	3690	673	11563
1982	GPMB	7370	5415	NA	12785
1983	GPMB	NA	2854	NA	2854
1984	GPMB	7497	3030	2555	13082
1985	GOG	5986	6518	9962	22466
			Post ERP		
1986	GOG	3000	1500	1000	5500
1987	GOG	1500	3000	0	4500
1988	GOG	0	0	30	30
1989	GOG	0	6453	1559	8012
1990	FAO	(0)	(1165)	(1000)	(2165)
	RPEs	(0)	(0)	(500)	(500)
	GOG(CDP)	(0)	(800)	(100)	(900)
	Total[4]	0	1965	1600	3565
1991	FAO	(0)	(1000)	(0)	(1000)
	GCU	(0)	(500)	(0)	(500)
	RPEs	(0)	(100)	(0)	(100)
	GOG(CDP)	(0)	(607)	(0)	(607)
	WID	(0)	(0)	(1000)	(1000)
	Total[4]	0	2207	1000	3207

Source: FAO, GCU.

Note 1: GPMB: Gambia Produce Marketing Board; FAO: Food and Agricultural Organization; GCU: Gambia Cooperative Union; GOG: Government of the Gambia; RPE: Registered Private Entrepreneurs; CDP: Cotton Development Project; WID: Women in Development

2: SSP: Single Super Phosphate

3: Compound fertilizer contain NPK in the following proportions:
1980-82: 20-20-0; 1983: 26-14-0; 1984: 18-46-0; 1985-88: 15-15-15; 1989-90: 8-24-24 by GCU,RPE and FAO, and 14-23-14 by CDP.

4: This does not include fertilizer imported through unregistered private entrepreneurs (UPE) due to data limitations.

376

Table VII-6 Fertilizer Prices in The Gambia, 1980-89, in Dalasis per Ton.

Year	Type of Fertilizer	CIF	Wholesale	Retail[1]	Official Retail Price[2]	Subsidy	Subsidy[3] %
	(1)	(2)	(3)	(4)	(5)	(6)	(7)
1980	SSP	278	378	411	104	307	75
	UREA	508	615	648	267	381	59
	20-20-0	501	608	641	133	508	80
1981	SSP	209	280	298	108	190	64
	UREA	520	591	609	419	190	31
	20-20-0	434	505	523	135	388	74
1982	SSP	291	461	472	140	332	70
	UREA	520	724	735	239	496	68
	20-20-0	548	755	766	194	572	75
1983	SSP	291	399	435	160	275	63
	UREA	520	662	698	253	445	64
	26-14-0	538	682	718	245	473	66
1984	SSP	485	521	524	270	254	49
	UREA	803	839	846	370	476	56
	18-46-0	917	953	956	370	586	61
1985	SSP	385	525	630	520	110	18
	UREA	500	640	745	700	45	6
	15-15-15	505	645	750	600	150	20
1986	SSP	903	1043	1148	700	448	39
	UREA	1001	1141	1246	1030	216	17
	15-15-15	1246	1386	1491	1140	351	24
1987	SSP	680	800	840	840	0	0
	UREA	968	1095	1160	1160	0	0
	15-15-15	1040	1168	1220	1220	0	0
1988	SSP	680	800	840	840	0	0
	UREA	968	1095	1160	1160	0	0
	15-15-15	1040	1168	1220	1220	0	0
1989	SSP	680	800	840	840	0	0
	UREA	1260	1480	1540	980	560	36
	8-24-24	1540	1760	1820	1120	700	39
1990	UREA	1571	1961	2200	2200	0	0
	8-24-24	1869	2160	2400	2400	0	0
1991	UREA (FAO)	2450	2700	2800	2800	0	0
	8-24-24 (FAO)	2950	3100	3200	3200	0	0
	8-24-24 (GCU)	NA	NA	2400	2700	0	0
	14-23-14 (CDP)	NA	NA	2800	2600	200	7

Source: FAO. FAO: Food and Agricultural Organization; GCU: Gambia Co-operative Union; CDP: Cotton Development Project.

Note 1: Actual retail price.

2: Price paid by the consumer.

3: Gives % of fertilizer price subsidized by the government at consumer level.

Table VII-7 Volume of Fertilizer Distributed, 1988-92.

		Participants[1]					
Year	Fert. Type	GCU	FAO	GOG	AATG	RPEs	Total consumed[2]
	(1)	(2)	(3)	(4)	(5)	(6)	(7)
			(in metric tonnes)				
1988-89	SSP[3]	1147	0	NA	NA	0	
	NPK[4]	339	0	NA	NA	0	
	UREA	154	0	NA	NA	0	
	TOTAL	1640	0	NA	NA	0	
1989-90	SSP	42	0	NA	NA	0	
	NPK	478	1550	NA	NA	0	
	UREA	43	610	NA	NA	0	
	TOTAL	563	2160	NA	NA	0	
1990-91	SSP	9	0	0	NA	0	
	NPK	605	1165	800	NA	0	
	UREA	58	803	100	NA	500	
	TOTAL	672	1968	900	NA	500	
1991-92	SSP	0	0	0	0	0	
	NPK	634	570	587	NA	100	
	UREA	0	197	0	NA	0	
	TOTAL	634	767	587	102	100	2190

Source: FAO, GCU, AATG.

Note 1: GCU: Gambia Cooperative Union; FAO: Food and Agricultural Organization; GOG: Government of The Gambia; AATG: Action Aid, The Gambia; RPEs: Registered Private Enterprises.

2: The data on total fertilizer consumed are not available except for 1991-92.

3: Single Super Phosphate.

4: Refers to all compound fertilizers with varying combinations of nitrogen, phosphorus and potassium.

Table VII-8 Terms and Conditions of Financial Arrangements in the Fertilizer Sector in the Pre ERP Period.

Years	Marketing Level	Participant[2]	Creditor[3]	Terms and Conditions: Annual Int. rate	Terms and Conditions: Collateral
	(1)	(2)	(3)	(4)	(5)
1980-84	Importer	GPMB	Self-finance[1] and Central Bank	0	Assets
1980-84	Wholesaler	GPMB	Self-finance[1]	0	Assets
1985	Importer and wholesaler	GPMB	Italian Grants	0	None
1980-83	Primary retailer	GCU	GCDB	9	Assets
			GPMB	0	Product market links
1984	Primary retailer	GCU	GCDB	17	Assets
			GPMB	21	Product market links
			ADP II	0	None
1985-86	Primary retailer	GCU	GCDB	21	Assets
			GPMB	18	Product market links
			ADP II	0	None
1980-86	Secondary retailer	CPMS	GCU	13	Loans outstanding and product market links
		Govt. programs	Grants	0	None
1980-86	Consumers	Farmers	CPMS	17	Product market links
			Govt. programs	0 or lower	None

Source: FAO, GCU.

Note 1: Financed through groundnut sales.

2: GPMB: Gambia Produce Marketing Board; GCU: Gambia Cooperative Union; CPMS: Cooperative Produce Marketing Societies.

3: GCDB: Gambia Commercial & Development Bank; ADPII: Agricultural Development Program II initiated by the World Bank.

Table VII-9 Percent of Groundnut Farmers Purchasing Compound Fertilizer by Source of Purchase and Regional Division in The Gambia, 1991.[1]

Division	#CPMS[2]	Coops in Cash	Coops with Credit	Trader	#FAO PE's[3]	Family Member	Other[4]
	(1)	(2)	(3)	(4)	(5)	(6)	(7)
Western	7	100 (0)	0 (0)	0 (50)	8	0 (0)	0 (50)
North Bank	18	14 (41)	82 (41)	4 (14)	4	0 (0)	0 (5)
Lower River	4	0 (13)	02 (13)	70 (25)	2	28 (13)	0 (38)
MID-North	5	0 (6)	17 (44)	83 (38)	2	0 (6)	0 (6)
MID-South	6	0 (0)	57 (0)	28 (0)	1	15 (0)	0 (0)
Upper River	2	0 (0)	0 (0)	95 (88)	3	5 (7)	0 (5)
The Gambia	42	3 (8)	19 (13)	71 (62)	20	6 (6)	0 (11)

Source: NASS 91 (NADC/DOP/MOA); GCU; FAO.

Interpret the figures as follows:

Fertilizer used in groundnut fields in the Western Division was all bought with cash from co-operative unions, while in the North Bank Division only 14% was bought with cash from the same source.

Note 1: Figures in parentheses refers to corresponding estimates in 1990.

2: Gives number of CPMS qualified to supply input loans in 1991-92.

3: Gives number of private dealers affiliated with FAO who qualified to give input loans in 1991-92.

4: Other refers to moneylenders, friends and relatives from other villages.

Table VII-10 Percent of Area Using Fertilizer by Regional Division and Crop, 1991.[1]

Division	Coarse Grains	Groundnut	Swamp and Upland Rice
	(1)	(2)	(3)
Western	21 (15)	14 (8)	8 (9)
North Bank	45 (51)	5 (12)	3 (16)
Lower River	46 (33)	13 (15)	11 (4)
MID-North	17 (44)	6 (18)	0 (0)
MID-South	39 (44)	12 (5)	2 (0)
Upper River	51 (34)	23 (30)	0 (11)
The Gambia	36 (39)	11 (15)	5 (6)

Source: NASS 91 (NADC/DOP/MOA)
Interpret as follows:
In Western Division fertilizer was applied on 21% of total Coarse Grain area, 14% of Groundnut area and 8% of Swamp and Upland Rice area.
Note 1: Figures in parentheses refers to corresponding estimates in 1990.

Table VII-11 Percent of Area Fertilized in The Gambia, by Crop and Type of Fertilizer, 1991.[1]

Crop	Manure	SSP	Compound	Urea
Maize	61 (59)	4 (2)	46 (43)	15 (13)
Early Millet	50 (45)	4 (2)	42 (49)	3 (7)
Late Millet	33 (23)	3 (8)	59 (55)	9 (22)
Sorghum	61 (36)	0 (3)	37 (43)	3 (31)
Coarse Grains	52 (41)	3 (4)	44 (48)	6 (18)
Upland Rice	20 (4)	4 (11)	7 (9)	62 (55)
Swamp Rice	15 (43)	6 (0)	41 (42)	24 (22)
Upland and Swamp Rice	18 (24)	5 (6)	23 (26)	44 (39)
Groundnut	22 (13)	24 (27)	46 (53)	9 (8)
Retail price ('92) paid by consumers[2]	D45/bag	-	D135-145/bag	D90-130/bag

Source: NASS 91 (NADC/DOP/MOA); FAO; GCU.
Note: Since more than one type of fertilizer may be used in the same plot, totals may exceed 100%.
1: Figures in parentheses refers to corresponding estimates in 1990.
2: One bag = 50 kg; compound refers to 18-24-24 used on groundnuts.

Table VII-12 Terms and Conditions of Financial Arrangements in Fertilizer Sector by Market Level, Agents and Creditors during Post ERP Period.

				Terms and Conditions	
Channel	Marketing Level	Participant	Creditor	Annual int.rate	Collateral
(1)	(2)	(3)	(4)	(5)	(6)
GCU	Import and Wholesale	GCU	ADP II (World Bank)	0	None
	Primary retailer	CPMS	GCU	16	Outstanding loans, product market links
	Secondary retailer	Village Branches	CPMS	21	Outstanding loans, product market links
	Consumers	Farmers	Village Branches	21	Product market links, social links
FAO	Importation and Wholesaling	FAO	Grant & Women's World Bank (WWB)	0	None
	Primary Retailers	PDs	FAO	18	None
		JP, AATG	Cash sale	–	–
		MGA	FAO	18	None
		BD	PDs	18	Group guarantee
		WID	FAO/WWB	NA	NA
	Secondary retail	Kafos	PDs	18	Group guarantee
			AATG	0 (12% from 1992)	Group guarantee
		Women PDAs	WID/WWB	18	FAO guarantee
	Consumers	Farmers	PDs	18	Legal protection
			JP	11	Social links
			MGA	18	Members
			BD	18	Demonstration farmers
					Legal protection
			PDs (thru'kafo)	18	Peer pressure
			AATG (thru' kafo)	9 (15% from 1992)	
GOG	Import, Wholesale	GOG	Grants	0	none
	Primary Retail	CDP, URDIP	Grants	0	NA
	Consumers	Farmers	CDP URDIP	11	NA
RPE	Import and Wholesale	RPEs	LC from London bank	NA	FAO revolving fund as guarantee
UPE	Import, wholesale, Retail	UPEs	Informal credit markets	Variable	Social and business links
	Consumers	Farmers	Informal credit markets, UPEs	Variable	Social and business links

NA: Not available.
Source: GCU, FAO, OSU survey.

382

Table VII-13 Strengths and Weaknesses of Current Fertilizer Marketing Agents and Major Constraints Faced by The Market Channels.

Channel	Strengths	Weaknesses	Constraints
(1)	(2)	(3)	(4)
C1-GCU	•Wide coverage; national penetration •Established physical infrastructure •Commendable recent performance •Product linkages facilitating contract enforcement •Experience in fertilizer marketing •Increased community participation through improved marketing strategies •Competitive prices for fertilizer and loans	•Restricted access to non-groundnut farmers and women •Fragile management •Highly centralized operations •Poor image due to past performance •Dependence on external grants; sustainability of the program •Less developed financial instruments to deal with unlinked loans •Less produce diversification	•Financial constraints; lack of domestic and off-shore financial sources •Manpower constraint; limited trained personnel to assist in marketing and financial activities •Lack of infrastructure for undertaking value added activities like processing, etc.
C2-FAO	•Large involvement by private entrepreneurs •Wide coverage through private entrepreneur retail networks •Economies of scale through horizontal integration with other channels •Established reputation with foreign suppliers of fertilizers •Competitive fertilizer and loan prices •Established links with government and parastatals to use infrastructure facilities	•Dependence on external grants •Paternalistic attitude towards private entrepreneurs •Less rigorous screening in choice of private entrepreneurs •No insistence on equity of collateral from private entrepreneurs; creates moral hazard problems •No credit-product linkages •Sustainability of the program is questionable	•Non specialized in fertilizer marketing •Uncertainties in government policies impeding the encouragement of private entrepreneurs
C3-RPEs	•Competitive •Specialized in trading activities •Less formalities in marketing and financial procedures	•Lack of expertise in fertilizer trading •Limited amount of financial and physical infrastructure •Lack of experience in supplying fertilizer loans; less developed financial instruments to deal with farmer credit	•Financial and physical infrastructure •Slow turn-over and low profitability of fertilizer trade compared to other commodity trade •Uncertainty of government policies •Market size is small •Difficulty in achieving economies of scale and scope
C4-GOG	•Reputation to import fertilizer •Large manpower and physical infrastructure •Ability to mobilize funds to finance marketing operations	•Highly centralized operations •Usually less efficient due to low incentive structures •Low repayment records for fertilizer loans •Subsidized loans	•Highly dependent on external grants
C5-UPEs	•Highly flexible operations •Innovative in designing contracts to mitigate lending risks •Efficient use of collateral substitutes to enforce contracts	•Highly scattered and adhoc operations •Small scale operations •Lack of links with other channels	•Financial Constraints •Physical infrastructure constraints •Lack of legal protection

Table VII-14 Area, Yield and Production of Major Crops, 1979/80 to 1991/92.

Year	Groundnut			Swamp Rice			Upland Rice			Maize		
	Harv'd Area[1]	Yield[1]	Output[1]	Harv'd Area	Yield	Output	Harv'd Area	Yield	Output	Harv'd Area	Yield	Output
	(1)	(2)	(3)	(4)	(5)	(6)	(7)	(8)	(9)	(10)	(11)	(12)
1979/80	67.8	987	66.9	10.3	1,699	17.5	4.9	531	2.6	5.4	1,222	6.6
80/81	68.9	874	60.2	17.3	1,462	25.3	1.5	1,200	1.8	5.9	1,068	6.3
81/82	80.7	1,349	108.9	22.3	1,251	27.9	4.2	1,119	4.7	7.6	1,645	12.5
82/83	95.0	1,594	151.4	22.9	1,293	29.6	4.3	953	4.1	9.4	1,809	17.0
83/84	97.2	1,171	113.8	10.2	1,775	18.1	3.3	788	2.6	6.9	1,232	8.5
84/85	91.4	1,150	105.1	6.2	1,435	8.9	1.5	1,467	2.2	9.2	1,359	12.5
85/86	58.5	1,296	75.8	7.3	1,603	11.7	3.1	1,161	3.6	16.7	1,587	26.5
86/87	80.4	1,373	110.4	9.7	1,320	12.8	3.8	1,132	4.3	11.1	1,559	17.3
87/88	95.0	1,263	120.0	12.4	1,068	12.5	1.6	875	1.4	13.0	1,185	15.4
88/89	94.8	1,038	98.4	14.0	1,429	20.0	3.8	1,026	3.9	12.7	1,220	15.5
89/90	86.1	1,509	129.9	9.2	1,250	11.5	3.4	824	2.8	10.5	1,343	14.1
90/91	89.5	832	74.5	9.8	1,224	12.0	3.2	750	2.4	11.3	1,204	13.6
91/92	79.5	1,054	84.2	10.2	1,228	12.5	2.2	1,048	2.3	17.3	1,179	20.4

Year	Sorghum			Early Millet			Late Millet		
	Harv'd Area	Yield	Output	Harv'd Area	Yield	Output	Harv'd Area	Yield	Output
	(13)	(14)	(15)	(16)	(17)	(18)	(19)	(20)	(21)
1979/80	11.6	759	8.8	1.7	1,000	1.7	9.3	753	7.0
80/81	14.3	958	13.7	6.0	900	5.4	11.6	853	9.9
81/82	11.9	1,076	12.8	11.4	1,272	14.5	11.6	1,267	14.7
82/83	16.3	963	15.7	13.6	1,243	16.9	16.0	1,050	16.8
83/84	6.9	1,029	7.1	14.1	1,021	14.4	11.1	1,034	11.7
84/85	7.3	1,123	8.2	19.2	1,193	22.9	13.7	1,139	15.6
85/86	12.8	906	11.6	35.4	1,215	43.0	14.5	800	11.6
86/87	8.8	1,023	9.0	32.2	1,205	38.8	12.6	984	12.4
87/88	9.0	733	6.6	31.4	1,217	38.2	12.9	884	11.4
88/89	8.2	878	7.2	30.2	1,116	33.7	13.5	1,059	14.3
89/90	9.7	1,103	10.7	40.6	936	38.0	12.1	1,050	12.7
90/91	13.1	626	8.2	39.3	919	36.1	12.5	864	10.8
91/92	12.6	963	12.2	46.1	1,076	49.7	10.2	805	8.2

Source: National Agricultural Sample Survey, various years, Department of Planning, Ministry of Agriculture (NASS/DOP/MDA).

Note 1: (Harvested area in '000 of ha; Yield in kg/ha; Output in '000 of ton.

384

Figure VII-1
Configuration of the Fertilizer Trade Channels in the Pre ERP Period

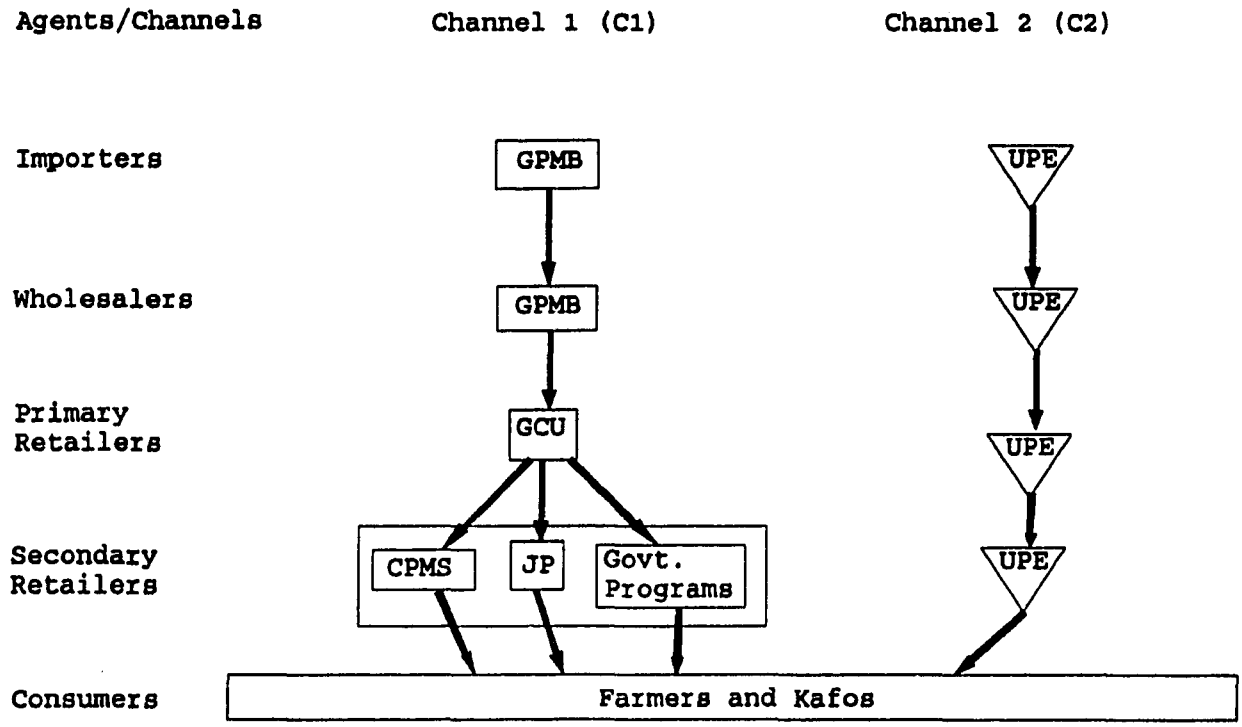

Notes:
1) □ Formal Channel
▿ Informal Channel
2) GPMB: Gambia Produce Marketing Board; CPMS: Cooperative Produce Marketing Societies; JP: Jahally-Pacharr Irrigated Project; UPE: Unregistered Private Entrepreneurs.

Figure VII-2
Configuration of the Fertilizer Trade Channels in the Post ERP Period (1990-92 Situation)

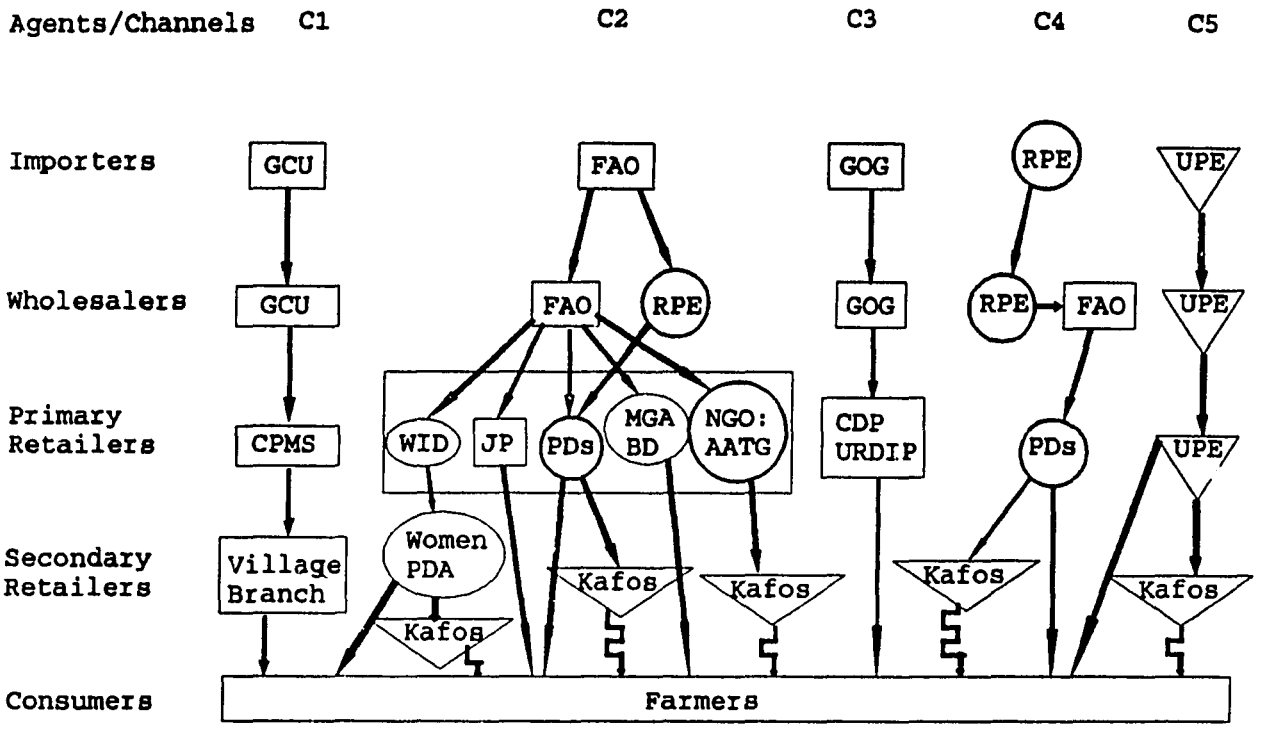

Notes:

1) ⁓ Consumed at Kafo level and/or sold to Kafo members
2) □ Formal Channel
   o Semi-formal Channel
   v Informal Channel
3) GCU: Gambia Cooperative Union; CPMS: Cooperative Produce Marketing Societies; FAO: Food and Agricultural Organization; RPE: Registered Private Entrepreneurs; WID: Women in Development; JP: Jahally-Pacharr Irrigated Rice Project; PDA: Private Dealers Association; MGA: Maize Growers Association; AATG: Action Aid, The Gambia; GOG: Government of The Gambia; CDP: Cotton Development Project; URDIP: Upper River Division Irrigation Project; UPEs: Unregistered Private Entrepreneurs

386

Appendix Table VII-1 List of Cooperative Produce Marketing Societies Sampled for the Study.

No.	Division	No. Villages	Name of the Villages
	(1)	(2)	(3)
1	Western Division	3	Sukuta, N'demban, Brikamma
2	Lower River Division	2	Burong, Kwinella
3	North Bank Division	3	Njawara, Njabakunda, Dipakunda
4a.	MaCarthy Island Division (South)	3	Brikama-Ba, Bansang, Kudang
4b.	MaCarthy Island Division (North)	2	Dingarai, Njau
5	Upper River Division	1	Fatoto
TOTAL		14	

Appendix Table VII-2 Sample of Private Dealers (Affiliated with FAO) Interviewed for the Study.

No.	Division	Male Participants: Name of Village	Female Participants: Name of Village
	(1)	(2)	(3)
1	Western Division	None	Sukuta, Faraba-Banta
2	Lower River Division	Burong	None
3	North Bank Division	Munyagen	Farrafenni, Bakindik
4a.	MaCarthy Island Division (South)	Bansang, Brikama-Ba	Madina-Umfally
4b.	MaCarthy Island Division (North)	None	None
5	Upper River Division	Basse, Fatoto	None
TOTAL		6	5

387

Appendix Table VII-3 Name and Location of Samples Villages where Farmers/Kafos were Interviewed.

No.	Division	No. Villages	Name of the Villages
	(1)	(2)	(3)
1	Western Division	3	Sukuta, N'demban-Jola, Besse
2	Lower River Division	2	Burong, Kwinella[1]
3	North Bank Division	3	Panneh-ba, Foddakunda, Dipakunda, Kerr-Gumbo, Bakalar
4a.	MaCarthy Island Division (South)	3	Boraba
4b.	MaCarthy Island Division (North)	2	Dingarai
5	Upper River Division	1	Fatoto
TOTAL		14	

Note 1: Kwinella was also selected to serve as a sample for Action Aid.

Appendix Table VII-4 Fertilizer Recommendations and Requirements in The Gambia.

	Recommended Dosages			Requirement kg/ha	
	N	P_2O5	K_2O	NPk	Urea
	(1)	(2)	(3)	(4)	(5)
Groundnut	8	24	24	40	-
Millet	54	24	24	20	20
Sorghum	54	24	24	20	20
Maize	81	36	36	60	60
Rice	77	24	24	20	30
Cotton	58	36	36	-	-
Vegatables	81	36	36	60	60
Others	54	24	24	66	66

Source: FAO, 1992.

CHAPTER EIGHT

COMMODITY AND FINANCIAL FLOWS IN FOOD COMMODITY MARKETS

by

Mayada Baydas

and

Richard L. Meyer

Table of Contents

I. INTRODUCTION 1

II. METHODOLOGY 2

1. Subsector Analysis 2

2. Data Collection 2

III. COMMODITY FLOWS AND VERTICAL LINKAGES 4

1. Markets 4
   A. Products 4
      a.) Flour 5
      b.) Rice 5
   B. Distribution 5

2. Economic Agents 6
   A. Importers 6
      a.) Flour Importers 7
      b.) Rice Importers 7
   B. Wholesalers 8
   C. Retailers 9

3. End Users 10
   A. Households 10
   B. Manufacturing Enterprises 10

IV. METHODS OF FINANCING COMMODITY FLOWS 11

1. Financial Contracts for Importation 11
   A. Definition 12
   B. Terms 13
   C. Size 13
   D. Interest Rate and Implicit Charges 13
   E. Collateral Requirements and Substitutes 13
   F. Delinquency and Default 14

390

2. Financial Contracts for Wholesaling 14
A. Definition 14
B. Term 15
C. Size 15
D. Interest and Implicit Charges 15
E. Collateral Requirements and Substitutes 15
F. Delinquency and Default 15

3. Financial Contracts for Retailing 16
A. Definition 16
B. Term 16
C. Size 16
D. Interest and Implicit Charges 17
E. Collateral Requirements and Substitutes 17
F. Delinquency and Default 17

V. FINANCIAL CONTRACTS USED IN COMMODITY TRADING 17

1. Formal Financial Contracts 17

2. Informal Financial Contracts 18

3. Access to Financial Markets 19

4. Market Efficiency 20

VI. LESSONS LEARNED AND IMPLICATIONS FOR THE FERTILIZER SECTOR 20

1. Scale Economies 21

2. Scope Economies 22

3. Financing the business 23

391

List of Tables

Table VIII-1 Gross Domestic Product. 27
Table VIII-2 The Gambia: Composition of Imports, 1988/1989. 28
Table VIII-3 Survey of Economic Agents Managing the Flow of Commodities. 29
Table VIII-4 Types of Traders and their Customers. 29
Table VIII-5 Characteristics of the Financial Contracts Used in Food Commodity Trading. 30
Table VIII-6 Sources of Finance Reported in the Small Scale Enterprise Sample. . . 31
Table VIII-7 Savings Channels Reported in the Small Scale Enterprise Sample. . . . 32

List of Figures

Figure VIII-1 Flow of Commodities in the Food Marketing Channels 33
Figure VIII-2 Financial Flows in the Food Marketing Channels 34

392

ACRONYMS USED IN CHAPTER EIGHT

ERP	Economic Recovery Program
GOTG	Government of The Gambia
L/C	letter of credit

CHAPTER EIGHT
COMMODITY AND FINANCIAL FLOWS IN FOOD COMMODITY MARKETS*

I. INTRODUCTION

The service sector in the Gambian economy, as is typical in most developing countries, accounted for the largest share of total gross domestic product in 1990/91, followed by agriculture and then industry (Table VIII-1). Among the different subsectors under services, the most significant is trade which accounts for 25 percent of the GDP. The strategic location of The Gambia has stimulated trading activity to meet the growing domestic demand and to service the reexport trade to neighboring countries. The total population of The Gambia, which was estimated at 809,000 in 1988 (Jabara, 1990), consumes only a small share of total imports. Traders are heavily dependent upon the reexport trade which expanded greatly in the 1970s when Gambia maintained an open trade policy while neighboring countries increased tariffs to limit imports. This trend was even more evident under the Economic Recovery Program (ERP) which implemented trade liberalization policies in The Gambia. These measures contributed to a near doubling of the contribution of trade in commodities other than groundnuts to GDP from 9.8 percent in 1974/75 to 17.4 percent in 1988/89 (Jabara, 1990).

This large trading activity involves large amounts of imports which filter through a complex wholesale and retail network. This network consists of a large number of economic agents managing the flow of commodities through the three principal stages of marketing: importation, wholesaling and retailing. Each group of importers, wholesalers and retailers perform certain functions and operate according to a set of practices shaped by their objectives and constraints.

Food commodities represent the largest import item in The Gambia (Table VIII-2). Food items constituted about 36.1 percent of total imports which amounted to US $179 million in 1988-89 (AID, 1991; Jabara, 1990). These commodities are mainly rice, flour, sugar, tobacco, tea and cooking oil. The relative share of monthly household expenditures on food items was estimated at 63 percent on average for both urban and rural households (Jabara, 1991). Rice is the most important food item in the Gambian diet representing about 40 percent of the daily caloric consumption for an adult, whereas grains and grain products add about 10 percent (Jabara, 1991). The two important food commodities of rice and flour will be analyzed in this chapter.

---

* We would like to thank all the traders who participated in our study and helped us understand how they run their businesses. Many thanks to Mr. Benjamin Carr for his assistance. The usual disclaimers apply.

394

The objective of this chapter is to examine the operations and linkages of traders involved in importing, wholesaling and retailing key consumption commodities. This inquiry will allow us to: first, sketch the activities of these traders who are among the most important economic agents in The Gambia as noted by the contribution of trade in commodities to GDP in Table VIII-1; second, identify the nature of the financial services traders demand and the sources of financing they draw upon; third, assess the role that formal financial institutions play in financing the trade of these commodities; and fourth, explore the feasibility of an expanded role for these private traders in the fertilizer trade.

The next section of this chapter presents the methodology of the study. The third section discusses the commodity flows and the downstream market linkages by the various traders from importation to final consumer. The fourth section describes the financial contracts associated with each stage of the commodity market from importers to retailers. The significance of the different financial instruments in the trade network is discussed in the fifth section while the last section presents lessons learned and implications for the fertilizer sector.

II. METHODOLOGY

1. Subsector Analysis

The subsector analytical methodology was chosen for this study. It facilitates the study of vertical (upstream-downstream) linkages in the distribution/production of commodities among the different economic agents (Boomgard et al.). Furthermore, it helps to identify the constraints affecting the different economic units and the appropriate means for intervention into the market.

In analyzing the trader network handling the flow of commodities, the subsector approach reveals important insights into their vertical linkages, network coordination and competition in the market place. By conducting a survey of key traders operating at different levels of the marketing chain along with a number of end users, a considerable amount of information can be collected about the flow of commodities and the nature of the financial contracts associated with these flows.

2. Data Collection

Private entrepreneurs and especially large commodity traders are generally reluctant to give quantitative information to researchers who are not well known to them. On the other hand, they often take great pride in their successes and frequently enjoy discussing

their businesses in a general way. This situation presents a formidable challenge to researchers who need quantitative data to analyze economic problems. One way to reduce the data problem is to obtain as much information as possible from the traders, then check their responses and collect additional information from their customers. This procedure involves collecting information from both sides of an economic transaction, i.e. buyer and seller, lender and borrower. In this way it is possible to compile qualitative data with some quantitative information about the traders' operations, the primary trade channels that exist for a commodity and the economic agents involved, the important mechanisms used in the flow of commodities from original source to final end users, and some of the most important constraints faced from the prospective of the current participants in the market.

The process of data collection for this study followed the procedure outlined above. Structured questionnaires were avoided in order to not create suspicion with the interviewees. Rather lengthy interviews following a general outline were conducted by the researchers with selected entrepreneurs involved in the food commodity trade. The group of importers selected for interviews was identified from the list obtained from the port authorities, which included only three names, so additional importers were chosen based upon the referrals of persons in The Gambia knowledgeable about the sector. The group of wholesalers and retailers selected for interviews was chosen through a random walk in the market places where they are concentrated. Since the total number of importers is small, these wholesalers and retailers all did business with one or another of the importers interviewed. The interviews were conducted by a research team that had already spent several weeks in the country learning about the economy, the business environment and trading activities so the interviewers could engage in substantive discussions with the interviewees and not accept casual answers to complex issues.

A total of 12 traders constitute the sample for this study (Table VIII-3). These include 7 importers, 3 wholesalers and 2 retailers. The 7 importers are among the largest importers of flour and rice in the country; therefore, the information obtained describes the operations of most of the trade in these two commodities at this time. The wholesalers and retailers have smaller size operations but it was felt that they are fairly representative of the sector.

The other set of data used in this study was information collected in a survey of manufacturing enterprises in four subsectors. As described in chapter six, roughly 40 enterprises were interviewed in each subsector which included tailoring, tie-dye production, metal-working and bakeries. Data from the subgroup of 39 bakeries that constitute the customers of the wholesalers and retailers who sell flour are used in the latter part of this chapter to complete the analysis of the flow of commodities to the end users.

III. COMMODITY FLOWS AND VERTICAL LINKAGES

This section of this chapter is composed of three parts. The first part presents a description of the markets for the different commodities, the nature of the commodities, their perishability and frequency of turnover for traders, and a description of the marketing system, facilities, infrastructure and transportation systems in The Gambia. The second part involves an identification of the principal agents in the trading network, and their functions and linkages. The third part consists of an analysis of how commodities reach the end users or final customers.

1. Markets

Most of the commodities imported into The Gambia come from Western Europe, namely UK, Germany, France and Italy, Southeast Asia, especially China and Thailand, and other Asian countries such as Pakistan. Trade in The Gambia is concentrated in and around the capital, Banjul, which is the point of entry for imports and where the few major importers and many of the wholesalers conduct their business. A large but unknown percentage of the imported commodities are re-exported to neighboring countries in West Africa, especially Senegal, Guinea Bissau, Guinea Conakry and Mali. Some wholesalers are located in the rural areas and distribute to the different local markets. Commodities reach the end users throughout the country mostly through the small retail shops which are spread throughout the different local markets and neighborhoods.

A. Products

The high demand for consumer items and the lack of barriers to enter in new product markets, especially for existing traders, increases the competition among these traders and presents some opportunities for them to diversify in handling more than a single commodity. Traders, in general, are involved in simultaneously trading more than one food commodity as well as other consumer goods. The economies of scale and scope and the reduced risk from diversification yield cost effective results that induce traders to adopt these patterns of handling various commodities. New products with a large demand present incentives for traders to include them in their operations.

Some traders switch commodities over time depending on market demand and the opportunities they perceive. The flexibility which traders gain by this strategy of switching among different commodities suggests this is a type of insurance against future trade shocks, such as unexpected shortages and price increases. The two principal commodities that constitute the bulk of the food consumption items are rice and flour. These commodities will be reviewed in detail in their trade channels from their origin of supply until they reach the final end users.

a.) Flour

Flour constitutes an important food ingredient in the Gambian diet because of the consumption of bread. The domestic consumption plus the large demand for the reexport trade are met almost solely from imports. Flour given to The Gambia as food aid last reported for 1987 was a negligible 300 tons (Jabara, 1990).

The amounts of flour imported into The Gambia were reported to sum up to or perhaps exceed 120,000 tons in 1990/91.[1] Hence, the commercial imports of flour represent about 99 percent of the total local consumption. Shipments are typically ordered from Western Europe every 15 to 30 days since flour cannot be stored for long periods and is more liable to spoil than rice.

b.) Rice

Rice is the principal staple food in the Gambian diet. Rice is grown in many rainfed parts of the country but the local production on 16,160 hectares in 1990/91 amounted to 21,000 tons which does not meet the local demand (GOTG, 1992). The Jahally Pacharr program officers estimate that the total local production meets about 30 percent of the total local consumption.[2] Food aid last reported for 1987 amounted to 12,000 tons so this leaves a significant amount of rice that is imported (Jabara, 1990).

Rice imports were estimated, based on the reports of the major importers, to total approximately 200,000 tons in 1990/91. This implies that one third of these imports constitute roughly 70 percent of the total local consumption and the other two thirds are reexported to neighboring countries. Rice shipments are made every few months since rice inventories can be carried for relatively long periods of time.

B. Distribution

The marketing system in The Gambia combines highly sophisticated techniques with simple ones. The importation of commodities is facilitated by the efficient telecommunication system and the port facilities. However, while the international telecommunication system is first rate, communication with the interior is still not well developed. The Banjul port is fairly efficient except for occasional congestion during the peak import-export season in June (AID 1991). Although the international airport has adequate facilities, most of the food commodities are imported via ocean vessels.

River transport has lost its significant role in being the major distribution channel for goods from The Gambia to other West African countries. River boats are used mainly for

---

[1] Estimate based on reported figures by the major importers interviewed.

[2] Estimate based on anecdotal reference.

carrying merchandise across the river from the south bank, where the port is located, to the north bank where it filters into Senegal. Although river transport was reported by one trader to be more efficient and cost effective than road transport for distribution to wholesalers around the country, very few traders actually move their goods to the interior via river boats.

Many of the roads around the country are not paved but trucks are the common means of carrying goods throughout The Gambia as well as across the border. The traditional donkey carts called "Kouskous" are still a popular customary means of carrying goods around Banjul and among the villages up country.

2. Economic Agents

The marketing system analyzed in this chapter is represented in Figure VIII-1. The principal economic agents in the trade network are identified in the diagram as: foreign suppliers, brokers, importers, wholesalers, reexport traders, retailers, enterprises and households. Our analysis focuses mainly on the agents in The Gambia; however, we will discuss their links with foreign suppliers. Each economic agent has a set of functions which are defined by his/her position in the marketing channel; in some cases, certain functions overlap and/or are carried out by more than one agent simultaneously.

A. Importers

The leading supply channel in The Gambia is the importers. The number of agents in this group is not large, particularly considering only those currently dealing with major food commodities. As mentioned, the port records identified only 3 active importers; however, 7 major active importers of rice and flour were identified in the survey. The scale of operation at this stage in the marketing channel is large due to the need to capitalize on scale economies to sustain the viability of the transactions. It is expected that these traders also enjoy scope economies by using their established facilities and access to financial services, and reducing their risks through diversification into different consumption items.

All the importers who are Gambian and Lebanese-Gambian entrepreneurs have been in the trade business for a considerable time and mostly inherited their businesses from their families. Thus, they have well established relationships with suppliers and clients and a considerable amount of information economies about market transactions. They can usually draw upon a large working capital which is basically the firm's equity.

Typically, these traders import the sacks of commodities in containers via ships from foreign sources either directly from the suppliers or through brokers. The traders engage in importation on a regular basis, handle the port requirements and custom clearances, and store the merchandise in their depots until they are sold. The commodities are sold in large and small wholesale quantities which vary from a few hundred tons to just a few tons. Hence, these traders assume the roles of both importers and wholesalers. Their clients are

the reexport traders, smaller wholesalers / large retailers and medium scale enterprises, such as bakeries in the case of flour (Table VIII-4).

The seven major importers interviewed included three of the largest flour importers and five of the largest rice importers with one importer engaged in trading both commodities.

a.) Flour Importers

Among the three flour importers interviewed, one reported imports of 6000 tons/month, another reported imports of about 1000 tons/month and a third indicated that he imports about 300-400 tons/month. One of the three has been importing directly from the same supplier in Germany for the past five years. The other two traders indicated that they deal with brokers in London who ensure the quality of the consignment and handle all the arrangements with the different suppliers. One trader, importing through an intermediary, indicated that the total cost of importing a ton of flour amounts to D4258/ton, whereas another trader, importing directly from the supplier, reported that the cost amounts to D2760/ton (based on the estimate of D138/50kg/bag and 20bags/ton) which includes shipping and handling. These figures indicate a wide price range which represents the cost of involving the intermediary.

Two of the flour importers transport some of their stock all the way to the interior and sell to wholesalers and retailers. One trader loads up to 60 tons in 1-2 trucks he owns twice every month and sells the flour in the interior. Another trader owns a river vessel which docks at two locations in Farafeni and Kaur and sells mostly to Senegalese traders.

The reexport channel is a very significant outlet for importers who deal with many reexport traders. It was reported by one of the major importers that almost 2/3 of the imported flour in The Gambia is reexported to neighboring countries.

A third group of customers who buy from importers are the medium scale bakeries. Each of the thirteen medium scale bakeries interviewed reported purchasing between 200-400 bags of flour per month which amounts to a total consumption of 10-20 tons of flour per month for each bakery. This group will be discussed further in the section elaborating on end users.

b.) Rice Importers

Prior to the ERP in 1985, GPMB officials reported that they were the sole importer for rice. The dissolution of that monopoly in the process of abolishing government control over some prices presented traders with an opportunity to get involved in rice importation. Many importers who were already importing other commodities prior to ERP had the advantage of owning the infrastructure and the access to financial markets so they could

immediately seize the opportunity. One trader reported that he entered the market when he managed to get working capital to start his business.

A total of five rice importers were interviewed. One of the interviewed traders implied that importing jointly with others is most efficient and, thus, he imports with two other traders. He reported that last year their imports equaled 150,000 tons. The other four importers interviewed work independently and the amounts they handle vary from 50,000 tons/yr to 20,000 tons/yr. Most of these traders handle other food and non-food commodities as well. Three out of the five importers reported that they order their stock through brokers located in London or Paris. Rice is typically purchased in US dollars.

Very large shares of the imported stocks are reexported to neighboring countries. These shares have been reported to amount to 70 percent and 90 percent in some cases. Hence, the reexport channel is an important market which helps importers to enjoy scale economies.

Rice is transported to the interior, and filters across the borders, through the numerous small wholesalers who purchase from the importers. Only one importer indicated that he transports rice, as well as other commodities, via river boats and sells to wholesalers and retailers up country. Another importer owns about 15 trucks used to transport rice to the interior.

A profitable market niche that one of the importers has found exists in exchanging rice for cashew nuts in Guinea Bissau, which represents a typical barter transaction. Almost 80 percent of the rice he sells there is exchanged on the basis of 1kg rice for 1kg of cashew nuts, and only 20 percent of the farmers prefer to pay for the rice in cash. Profits result for the trade from the price difference as 1kg of cashew nuts is about three times the price of 1kg of rice.

B. Wholesalers

The second major category of agents in the supply channel are wholesalers. The role of wholesaling is sometimes assumed by a few importers who also sell to smaller wholesalers as discussed above. However, the typical wholesalers described in this section represent numerous entrepreneurs who buy solely from importers and not from foreign sources. This group is largely dominated by Mauritanians and a few Gambians. The wholesalers normally deal with one or two importers because they build a strong customer-supplier relationship which has some advantages with regards to financing their purchases as will be discussed later. Most of the wholesale activity is concentrated in Banjul where the importers are located.

Three wholesalers were interviewed, two located in Banjul and one in the interior. The role assumed by these traders in the marketing channel is to operate as small scale

wholesalers and large scale retailers. Their major clients are small scale reexport traders, small local retailers, small scale enterprises and households (Table VIII-4).

Most wholesalers, like most importers, deal with more than one commodity, such as rice, flour, sugar and oil, to diversify their portfolio. Diversification ensures some degree of expected returns associated with a lower risk in case there are any sudden changes in prices. Wholesalers are also dictated by the types of commodities importers handle. Wholesalers typically buy in large quantities and stock up inventories in their warehouses. It was reported that some wholesalers occasionally make very large profits from their inventories when shortages arise in the local market.

The quantities purchased by wholesalers vary from month to month. One trader reported that he buys about 15 tons of rice per month and another reported amounts that vary between 70 to 100 tons per month. Another trader indicated that his purchases may vary from 200 to 5000 bags of total food items, i.e. flour, rice and sugar per month.

In general, transportation costs are handled by the wholesalers. The estimated purchase price of rice reported by one of the traders was D142/bag which he sells at D150/bag. It is not clear if that is the wholesale or retail price since he engages in some retailing as well; however, the wholesale price is normally less than the retail price. The major customers of wholesalers are retailers, small scale reexport traders and a few small scale manufacturing enterprises.

C. Retailers

Retailers constitute the third and last category of agents in the trading channel. The role of retailers is assumed by the small wholesalers/large retailers discussed above, as well as by the small retailers. The latter group is represented by the small corner shops in the local markets and neighborhoods which carry many consumer items including rice, flour, sugar and cooking oil.

Two retailers were interviewed for this survey. These retailers buy from several suppliers, often from the larger wholesalers and occasionally from the importers. One of these retailers reported that he buys from the suppliers in Banjul for a total of D20,000-25,000/month and transports the goods by truck or bus to Bangsang, in the interior, where his shop is located.

Typically, retailers buy in amounts ranging from 10 to 20 bags at each purchase. A bag of rice, for example, is purchased for D140 in Banjul and sold for D160 in Bangsang. The other retailer who is located in Banjul reported that he buys a total of 300 bags in each purchase of the different commodities, flour, rice and sugar. Consumers often purchase their supplies on a daily basis from the retail shops.

3. End Users

Households and manufacturing enterprises constitute the local end users in The Gambia. Households and small scale manufacturing bakeries are the two major types of clients who buy from retailers (Table VIII-4). As mentioned earlier, the medium scale bakeries buy mostly from importers and occasionally from wholesalers.

A. Households

The total population of The Gambia was estimated at 809,000 in 1988 (Jabara, 1990). The local production of rice meets only a small portion of total local demand and no wheat is produce in the country so there is a large dependency on imported rice and flour. Consumers rely heavily on these items for their daily consumption intake. Hence, households constitute the principal domestic consumers for these imported food items. The other group of end users is the manufacturing enterprises in the food processing industry.

B. Manufacturing Enterprises

Small and medium scale enterprises purchase some of the food items for processing purposes. As a part of a small scale enterprise survey, a group of 39 bakeries were interviewed in a sample totaling 153 enterprises.[3] In the bakeries subsector, 13 were classified as modern and 26 as traditional bakeries based on the type of equipment they utilize. Both types of bakeries only produce bread but the types differs because of the different mixing techniques and recipes.

Modern bakeries are medium scale enterprises which utilize electrical equipment and ovens, have an average value of assets equal to D1,387,239 and employ on average 14 workers. The type of bread these bakeries produce is similar to the french loaf "Baguet" which is a little different from the type produced in the tradition bakeries. The traditional bakeries fall in the category of small scale enterprises which utilize traditional clay ovens that burn wood, have an average value of assets equal to D4,306, rely on manual mixing of bread dough and employ on average 4 workers. The type of bread these bakeries produce is from a thicker dough and has a saltier taste.

The principal input material that all bakeries purchase is flour. The amount of flour purchased depends on the size of the bakery. Typically, the modern bakeries that purchase flour frequently from importers and occasionally from wholesalers require between 200 to 400 bags of flour per month. They usually purchase once or twice a month.

---

[3] See chapter six for a complete description of the total sample.

On the other hand, the traditional bakeries require between 1 to 2 bags of flour per day. These bakeries purchase frequently from retailers, as often as every day, and occasionally from wholesalers when they buy in larger amounts. These requirements measured per month and per day reflect the frequency at which the different bakeries buy flour.

IV. METHODS OF FINANCING COMMODITY FLOWS

Commodities are typically purchased for cash, or through a letter of credit, or sold based on the arrangements agreed to in a typically verbal financial contract drawn between the principal-supplier and agent-client. Credit sales are relatively more common than cash sales in the importation and wholesaling of commodities. This is partly due to the large quantities handled at these stages in the commodity flow.

Suppliers credit is very common among suppliers and their clients. This type of credit exists at the different stages of commodity importation, wholesaling and retailing. Supplier credit typically involves a financial contract directly between the supplier and customer in most cases, while a letter of credit involves the participation of a financial intermediary. These different cases are discusses below.

1. Financial Contracts for Importation

Importers reported that they normally finance their merchandise purchases through a letter of credit rather than paying directly in cash. The financing of commodities purchased from foreign suppliers normally involves a bank or non-bank financing company. One trader reported that he obtains a letter of credit arranged by his suppliers and referred to that facility as supplier credit.

Importers commonly hold bank accounts with both local and foreign banks. The local bank accounts are used for financing local expenses, while the foreign banks are used for financing the large operations of commodity imports. Importers maintained that the local banks are not competitive enough in setting their conditions for a letter of credit to attract clients who seek offshore financing. Some traders have overdraft facilities at the local banks which are normally secured by physical assets.

The definition, terms and conditions associated with the letters of credit used for commodity importation are discussed in detail in the following sections.

404

A. Definition

The typical financial contract drawn between the local importers in The Gambia and foreign suppliers involves the use of a letter of credit (L/C). This financial instrument drawn at a bank entails "a bank's guarantee of payment, indicated by a document that describes the handling of a specific transaction." (Koch, p. 695), that is the document specifies the contract terms and duties of all parties. These parties are the importer, the importer's bank, the supplier (exporter) and the supplier's (exporter's) bank. Typically, the importer sends a purchase order to the supplier and an L/C application to his bank. The importer's bank makes the payments to and handles all the transactions with the supplier's bank and sends the shipping documents to the importer so he can receive the goods at the port. Finally, the importer fulfills the payment requirement at the maturity of the L/C.

All the importers interviewed reported using letters of credit with foreign banks for financing their imports. They indicated that maturities range from 30 to 120 days to allow them enough time to receive the goods being shipped and inspect them before the L/C matures. One of the justifications they gave for using offshore financing was that the local banks require a 100 percent deposit up front to grant a letter of credit which is a very restrictive condition. In their use of foreign banks, however, traders may be required to deposit only 25 percent to 75 percent. One importer reported that although he is willing to make 100 percent deposit, to avoid paying interest charges, he still deals with foreign banks because of their efficiency in operations and to avoid foreign exchange problems.

Another important point for importers is the access to foreign exchange which they need to purchase commodities. Rice is normally traded in US dollars and flour was reported to be purchased in French Francs. This factor influences traders to seek foreign financial institutions and reduce the exchange cost of converting loans to dalasis and back to foreign currency when they need to pay for imports. The problem with the local banks is that they do not allow foreign currency to be maintained in their accounts so all deposits or transfers are automatically converted to dalasis. Thus, importers keep their foreign currency accounts with offshore banks.

An important consideration when assessing the traders use of offshore financing is the fact that most of them have been customers of foreign banks for a long time before the ERP when the domestic financial markets and foreign exchange were unstable. These traders have already established some credibility with offshore financial institutions and have reduced a large part of the information costs for their lenders and, thus, reduced their own transactions costs. In light of these circumstances, and even after the liberalization of the financial markets in The Gambia under the ERP, there have been few incentives for traders to shift their financial transactions to the local banks. Furthermore, as noted in Chapter I, the banks have found other profitable ways to use their resources rather than make loans to traders.

B. Terms

A letter of credit, like other financial instruments, is granted under some terms and conditions. In some cases, importers deal only with brokers who handle the financial arrangements with the banks or financing companies and thus, the importers may not know much about the details of the transaction. Importers in The Gambia reported that they typically draw letters of credit with maturities ranging from 30 to 120 days with most using a 60 day letter of credit. This facility allows traders to sell their commodities, collect payments from their customers and settle their letters of credit at maturity.

C. Size

None of the importers reported the size of the letters of credit they obtain. However, it is usually sufficient to cover an entire shipment which varies from one trader to another. As an example, a letter of credit needed to finance 6000 tons of flour would amount to about 14 million dalasis (about US $1.5 million), and a letter of credit to finance 350 tons of flour would amount to about 840,000 dalasis (about US $98,000). Traders also use several letters of credit to finance various shipments of different commodities during the same period.

D. Interest Rate and Implicit Charges

Interest rates charged on letters of credit were reported to be around 1 percent per month. In addition, the financial institution usually charges a 2-5 percent service fee. Established traders have been involved in this type of transaction with offshore financial institutions for a long time. They do not have to include high transaction costs above what would be expected to have access to this type of facility. This may not be true for new entrants into the market who would need to establish contact with foreign banks or resort to using the expensive local banks.

E. Collateral Requirements and Substitutes

Collateral was reported to be a requirement by foreign financial institutions when opening a letter of credit. This collateral could be in the form of an account with the bank or a term deposit as one trader indicated. As mentioned earlier, foreign banks require a 25-75 percent deposit to open a letter of credit, whereas the local banks require a 100 percent deposit. The local banks typically ask for physical assets, such as the title deed on property, to grant a loan or overdraft facility.

Collateral substitutes play a role in the formal markets as well. Bankers grant their trustworthy customers credit facilities when they know that customers are able to pay back from their business activities (other accounts). It is probable that foreign banks share information on the credit history of their customers and, hence, banks have access to sufficient information to make their decisions.

F. Delinquency and Default

Interviewing bank customers is not the ideal way to obtain information on delinquent or bad loans. However, since importers operate in the formal financial market and deal with foreign banks, delinquent or bad loans would not be expected to be significant except for bankrupt or dissolved traders. Importers cannot afford to be on bad terms with their foreign financial intermediaries because it would have severe effects on their accessibility to offshore financial markets.

2. Financial Contracts for Wholesaling

Commodity wholesaling is conducted by both importers and wholesalers. Consumer commodities, particularly food items, are imported in large quantities by multiple traders implying a large degree of competition. Supplier credit is often used as a tool to facilitate the marketing of these commodities. In periods when stocks are high, suppliers grant credit under fairly easy terms. When supplies are scarce, the terms are tougher. One importer reported giving credit to build a group of regular customers at the time when he was new and later reduced the amount of credit supplied when he became more established in the market.

Importers and wholesalers reported selling both in cash and on credit especially to their regular customers. Credit sales amount to more than half of the total sales at times. Eighty five percent of the medium scale bakeries (modern) which purchase on wholesale basis reported that they purchase flour on credit from their suppliers (Table VIII-6). For those who had received formal loans for their businesses, most of these loans consisted of bank guarantees for the off-shore supplier loans they received when purchasing equipment.

Only one small wholesaler reported that he prefers to acquire a loan from the bank and purchase from importers in cash. Thus, supplier credit is the most typical type of financial contract observed among all traders involved in wholesaling and the entrepreneurs purchasing on a wholesale basis.

A. Definition

Suppliers credit is extended by importers and wholesalers to their well known customers. Importers and wholesalers indicated that it usually takes up to a year or two to get to know customers and judge if they are creditworthy or not. The suppliers credit contract typically involves a downpayment at the time of purchase and the promise of paying the balance due by a particular date. Clients frequently complete the payment, acquire a new consignment of goods and request suppliers credit again.

B. Term

Suppliers credit is typically extended for a period of a few days up to a few weeks. The maturity is often determined by the frequency at which clients purchase from their suppliers. Small quantities are usually sold on terms which extend from a few days to a few weeks, whereas large quantities are often sold on terms which range from a few weeks up to a couple of months.

C. Size

Credit at the wholesale level is given in large and small amounts. On the one hand, large amounts of credit cover the price of a few hundred bags of flour or rice representing many thousands of dalasis in value. On the other hand, small amounts of credit cover the price of few dozen bags of flour or rice representing a few thousand dalasis. In periods when stocks are high, larger amounts of credit are extended at fairly easy terms; however, when stocks are scarce credit is also limited and terms are harder.

D. Interest and Implicit Charges

Suppliers did not acknowledge charging explicit interest rates. This is not surprising or uncommon in a Muslim society where Islamic rules are important. Wholesale traders in The Gambia deal with many Mauritanian and Senegalese traders who are Muslims, so explicit interest rates cannot be charged. However, traders do recover the cost associated with supplier credit to sustain their economic viability. The typical practice is to mark up the price when selling on credit while discounts were often reported ranging from 2.5 percent to 5 percent, when selling for cash. Thus, the higher price represents an implicit interest rate when selling on credit.

E. Collateral Requirements and Substitutes

Collateral was not an explicit requirement reported by any of the wholesalers interviewed. The established supplier-client relationship and personal confidence serve as collateral substitutes. These collateral substitutes carry immense weight, especially in the small trading community in The Gambia where a trader's reputation is highly regarded. In some cases, wholesalers reported that they sometimes took risks by selling on credit to some foreign reexport traders who they did not know very well.

F. Delinquency and Default

Wholesalers reported that delinquency in repayment occurs on occasions. A few incidences of default were reported which were written off as bad loans. However, these problems did not seem to be a primary concern for any of the traders because they reported that these losses were not a serious business problem.

3. Financial Contracts for Retailing

Commodity retailing involves the frequent sale of small quantities of goods to a large number of customers. The customers of retailers, both households and small scale manufacturing enterprises, constitute the end users of the consumption goods. The large number of customers served introduces information asymmetries. Asymmetric information results because of adverse selection and moral hazard problems which are associated with unknown types of customers because of the difficulties in screening and unpredictable behavior of some because of the difficulty in monitoring by the suppliers. Therefore, to avoid these problems, retailers typically demand cash. However, suppliers credit is also granted to regular trust-worthy customers. Some of the traditional bakeries interviewed reported that they often deposit some of their cash with retailers who offer money-keeping services (Table VII-7). One of the two retailers interviewed reported that he extends cash loans as well as in kind loans.

All the bakeries interviewed reported that they often offer supplier credit to regular customers. Eighty one percent of all the small scale bakeries interviewed which purchase their flour from retailers reported that they received suppliers credit and only 18 percent reported paying in cash (Table VIII-6). The terms and conditions for these contracts are discussed below.

A. Definition

Suppliers credit provided in commodity retailing is similar to that found in wholesaling. The retailer-customer credit contract typically involves a downpayment at the time of purchase of the commodity and a promise to complete payment by an established due date. Customers frequently complete the payment, acquire more goods, and request credit again.

B. Term

One of the differences between wholesale-supplier credit and retailer-supplier credit is the term of the loan. For example, the small scale bakeries reported that the term ranged from one day to a few days.

C. Size

The size of the retailer credit contract also differs from the wholesaler loans. The retailer's scale of operation has a direct bearing on the amount of commodities that can be sold on credit. Typically, small scale enterprises and households have access to one or two bags of flour or rice on credit. Thus, the amounts of these loans do not exceed a few hundred dalasis.

D. Interest and Implicit Charges

Retailers sell goods on credit without an explicit interest charge. One of the two retailers interviewed reported that he gives discounts when selling in cash, although the other retailer refused to acknowledge that he charges any type of interest. Nevertheless, the bakers interviewed reported that they often receive price discounts of about 2-5 percent if they pay in cash.

E. Collateral Requirements and Substitutes

No collateral was reported to be required for retailer loans by either of the two retailers. The bakers likewise reported that they pledged no collateral when they purchased flour on credit. Retailers typically know their regular customers very well by nature of geographic proximity. Thus, personal relationships and confidence play a large role as collateral substitutes in these transactions.

F. Delinquency and Default

Retailers did not report having any difficulties with their customers in terms of loan repayment and arrears. The proximity factor is probably the significant element in this relationship since any defaulters are not too far away from the small retailer who is literally around the corner. The consequences for default would be too severe for the customers to bear because that would eliminate future chances of gaining access to supplier credit.

V. FINANCIAL CONTRACTS USED IN COMMODITY TRADING

Table VIII-5 presents a summary of the typical financial contracts used at each stage in the marketing channel of commodity importation, wholesaling and retailing. Figure VIII-2 also presents a sketch of these contracts. The general terms and conditions describing these contracts are discussed in the following sections.

1. Formal Financial Contracts

The formal financial contracts are mainly represented by the standard letter of credit utilized by all of the importers. This financial instrument is obtained from foreign financial institutions under competitive conditions. Among the terms and conditions that characterize a letter of credit are the competitive interest rates of 1 percent per month, service charges of 2-5 percent, short term structure of 30-120 days and collateral requirements of a 25-75 percent deposit.

The most significant advantage of this financial instrument is the flexibility it provides traders in the importation of commodities. Traders have a high turnover of commodities and, thus, require large amounts of working capital to finance their purchases. In addition, importers find that this financial instrument is an acceptable and convenient means to pay their suppliers. Hence, a letter of credit seems to be an adequate financial instrument for meeting the demands of most importers.

The interesting feature in the Gambian markets is that the letter of credit that importers utilize in their operations is acquired from foreign financial institutions. The domestic financial institutions provide occasional loans and overdraft facilities which traders use to pay their local expenses. But the principal financial contract that is vital for the importation of commodities is dependent on foreign financial markets. It is also important to point out that most of the modern bakeries imported new mixing equipment and ovens using formal loans obtained from offshore suppliers and financial institutions.

2. Informal Financial Contracts

The significant form of informal contract used for commodity trading is suppliers credit. This financial contract is predominant in the wholesaling and retailing of commodities. The contract is an informal one between the suppliers and their customers, such as importers and wholesalers, wholesalers and retailers, and retailers and final consumers.

The terms and conditions for suppliers credit are largely informal. These contracts are characterized by implicit interest rate charges of 2-5 percent per month on average, a very short-term term of 1-60 days, and collateral substitutes in the form of supplier-customer relationship.

A particular point which is suggestive of the typical reciprocity factor in informal contracts is the mutual benefit to both parties in continuing the supplier-customer relationship. This association insures the advantage of information economies for both supplier-principals and customer-agents. On the part of the suppliers, extending credit secures customer-outlets for their commodities. On the part of the customers who get access to credit, they establish credible informational records with their suppliers who offer a source of financing for commodity trade.

There exist some similarities and differences between the informal suppliers credit and the formal letter of credit. The similarities arise first from the fact that almost all the customers draw upon this financing to purchase their commodities and second, each is specifically drawn to finance the particular commodity shipment being acquired. The differences exist, first, in the nature of the contracts. A letter of credit involves a formal contract between a financial institution and a borrower, whereas suppliers credit is typically a verbal agreement between the supplier and his customer. Other differences include the

term of the contract, size, interest rates and implicit charges, and default (Table VIII-5). Generally, each agent in the marketing channel is able to grant credit to his customers in amounts much smaller than the amount of credit he received from his supplier and for a shorter period of time. The importer who acquires a line of credit for 30-120 days can offer suppliers credit for 7-60 days to wholesalers who in-turn offer retailers credit for 1-30 days. The term of these contracts is important because it is probably associated with the repayment ability of the agents at each stage. These sources of finance represent the two most important sources for the tables in these food marketing channels.

3. Access to Financial Markets

Access to domestic financial markets does not seem to be a problem for affluent traders who are predominantly importers and large wholesalers. These traders hold sufficiently large deposits with the local banks and can meet the collateral requirements needed to acquire access to commercial loans when demanded. However, even these traders reported that they do not draw heavily upon the local banks for credit, because of the high interest rates. Another restriction that importers reported is the local banks demand of 100 percent deposit when opening a letter of credit.

On the other hand, importers who have access to offshore financial markets where they also hold large deposits, can draw upon these sources for lines of credit to meet their short term working capital demands. The competitive nature of foreign financial markets increases the probability that traders are charged reasonably competitive prices for the financial service they obtain.

The problem existing that importers face in dealing with the local banks does not seem to be one of access but rather of lack of competition. The terms and conditions for domestic financial services are harsher than those obtained in the foreign markets. Since the large scale importers have had access for a long term to offshore financial markets, there is little incentive for them to deal with the local banks which seem satisfied to earn income in ways other than lending to traders.

Small wholesalers and retailers, who constitute the other classes of traders, have little access to credit from the domestic financial institutions which they often referred to as the "useless banks". Although some traders deposit with the local banks, the main barriers these traders face are the reported high interest rates and lack of collateral. These barriers to access lead these traders to self-select themselves and look for other channels to access financial services, particularly credit. These small wholesalers and retailers rely mostly on the informal loans they obtain from their suppliers. Once they establish a working relationship with and gain the confidence of their suppliers, they gain access to these informal loans.

412

It is clear that financial market segmentation exists in The Gambia. On the one hand, importers have access to both domestic and foreign financial markets. But they choose to deal mainly with the offshore financial institutions. On the other hand, the wholesalers and retailers did not report any association with foreign financial institutions, had only a limited access to the domestic financial institutions and relied mainly on the informal suppliers credit.

4. Market Efficiency

The overall performance of the domestic financial system was analyzed in the earlier chapters of this report. What remains to be discussed here is the degree to which the existing financial channels provide the services required to maintain a dynamic flow of commodities in the Gambian trade sector.

Market efficiency is measured by the number and amount of the formal and informal financial services that exist and their relative cost structures. The letters of credit drawn from foreign sources seem to be working efficiently for importers in The Gambia. The large number and volume of these contracts as well as their prices indicate that they are cost effective. Likewise, the large number of transactions and the large volumes of funds involved in informal suppliers credit and the implicit prices attached to these transactions seem to suggest that they are a cost effective means to facilitate commodity trading. This suggests that suppliers credit could probably be used to finance the trade of other commodities.

On the other hand, the amount of services, especially loans, that the domestic formal financial institutions are providing is insignificant by comparison. About half of the small scale enterprises surveyed, as reported in Chapter VI, have deposit accounts in the domestic banks. Most large importers, wholesalers, and retailers also have local deposit accounts. But only a small percent of these traders and the small scale enterprises received loans from the banks. Moreover, most of the large scale importers obtained most of their financing offshore. Therefore, the domestic banking system mobilizes deposits from these entrepreneurs but makes few loans to them. This is reflected in the data reported in Chapter I which shows the large amount of investments made by banks in government T-bills. The nature and efficiency of formal financial intermediations is questionable given this pattern of domestic resource mobilization and lending.

VI. LESSONS LEARNED AND IMPLICATIONS FOR THE FERTILIZER SECTOR

The analysis conducted on the food commodity trade has provided information about the importation and distribution of these commodities, and the financial arrangements that facilitate this trade. It provides important lessons about how the system operates and allows

us to speculate about how these traders may respond to the possibility of becoming more actively involved in the privatization of the fertilizer sector. The purpose of this section is to summarize the important lessons learned about the food commodity trade and identify the issues that will affect the ability and desire of these traders to expand into fertilizer.

With the liberalized market environment in The Gambia, in which private trading has become more dynamic, food commodities, and especially flour and rice, are being imported and sold in large quantities and apparently at competitive prices. The existence of multiple agents at each level of the marketing channel contributes to competition. Part of the dynamism and efficiency is due to the large reexport trade which allows the traders to achieve large scale operations.

The financial contracts associated with the flow of commodities seem to be working fairly efficiently and the prices and interest rates for financial services are reasonably competitive. Offshore banks and suppliers credit provide most of the liquidity in the system because of the lethargic response of the domestic banking system. If the large importers could not access offshore funds, they would be faced with paying higher costs from domestic banks, while small and medium size firms without proven records of loan repayment would probably find it difficult to obtain loans at all.

The large private traders have accumulated experience and knowledge over time in their trading activities. They have market contacts, storage and transportation facilities, knowledge about international trading, and established relations with offshore financial institutions. As noted in Chapter VII, two firms have been involved with fertilizer imports for the FAO. Given that the government and donors are trying to privatize the marketing of agricultural imports, especially fertilizer, a logical question is whether or not and under what conditions the traders of food commodities would expand into fertilizer. Several things learned in the course of this study allow us to speculate about the possibilities of this occurring.

There are important differences and similarities between food commodities and fertilizer that affect the private sector response to the fertilizer sector in The Gambia. They can be grouped into possibilities for a) scale economies, b) scope economies, and c) access to finance.

1. Scale Economies

The food commodity trade operates on a fairly large scale but there are several limits to the scale of operations in the fertilizer sector.

- The total volume of domestic fertilizer demand is much smaller than for food commodities, as discussed in Chapter VII.

- The production cycle for crops for which fertilizer would be used is much longer than the shorter-term consumption cycle for food commodities, so there is a slower turnover of inventory. Therefore, sellers have fewer contacts with buyers and have less opportunity to monitor their businesses.

- There is great uncertainty about reexport demand for fertilizer. Fertilizer has been imported into The Gambia from Senegal. It is unclear what conditions would be required in neighboring countries for The Gambia to serve as an entrepot for regional fertilizer imports.

- The amounts of food aid entering The Gambia with potential distortionary effects on prices is fairly small. However, the subsidized role of the government and donors has been very large in the fertilizer sector; therefore, the possibility of their future involvement creates considerable uncertainty for private traders who would be unable to complete against a subsidized public sector distribution channel.

- The demand for food commodities that are important staples in The Gambia diet is likely to be quite inelastic. As a result, consumption is probably fairly stable, even when prices change. On the other hand, manure may be a fairly good substitute for chemical fertilizer or farmers may simply not use fertilizer if the price rises too much. Therefore, the quantity of fertilizer demand (i.e. sales) may become quite volatile in a privatized market if prices fluctuate widely as may occur in the international market, in which The Gambia is clearly a price taker.

These five factors suggest that private traders will find it difficult to achieve scale economies in the fertilizer trade and this will make them cautious about investing in it, especially if they expect that there may be several agents competing for a small market.

2. Scope Economies

If food traders decide to enter the fertilizer trade, there are four factors that suggest they might achieve scope economies.

- The dealers could probably use many of their existing transportation and warehousing facilities for fertilizer if they have sufficient capacity, or even reduce their food trade if profits were sufficient to justify using more facilities for fertilizer.

- The trade linkages established between importers, wholesalers, and retailers in the food trade may be used for the fertilizer business. Retailers in villages and towns are accustomed to selling a variety of products and they may find it profitable to handle fertilizer and acquire it from the same channels as their food commodities.

- The large scale importers may be able to use their recognized creditworthiness with offshore financial institutions to acquire needed letters of credit and working capital for the fertilizer trade.

- The food traders with multiproduct businesses have the flexibility of shifting among commodity lines and therefore may be able to make a profit and survive better in a dynamic market than a undiversified, single produce a fertilizer business.

3. Financing the business

Food traders have established ways to finance their businesses which appear to be reliable and reasonably priced. There are several differences with the fertilizer trade, however, that may make it difficult to transfer these same techniques to the fertilizer business. These problems may exist either a) in the acquisition of capital for the business, or b) in the granting and recovery of credit given to customers.

- As shown in this chapter, the large scale importers finance their businesses generally with short-term offshore letters of credit. Because of the rapid sales turnover, they can sell their stock on credit to their customers, yet get repaid in time to pay their credit obligations. The crop production season is several months long, however, so credit given to customers for fertilizer must be for a longer term. This means that the importer must get longer term credit which may not be as readily available or may be more expensive even from offshore sources. If they do not get longer term credit, there will be a mismatch in term structure: a trader would borrow short but would provide longer term suppliers credit to wholesalers/retailers who would provide seasonal credit to farmers. Interest charges (or foregone discounts) for credit sales would have to be higher for fertilizer credit to compensate for the larger interest expense.

- It is more risky for wholesalers to make loans to retailers or retailers to make loans to their customers (farmers) for longer term fertilizer credit than for shorter term food commodity credit. They do not see their customers as frequently, cannot monitor their activities as well, and cannot as effectively use the threat of cutting off future loans (and therefore access to the commodities) if current loans are not repaid. This problem is somewhat less severe if the agent making the fertilizer loan also sells food commodities to the same customer. Then access to food loans can be made conditional on good repayment of fertilizer loans.

- Fertilizer loans are made for an inherently risky farming activity which is several months in duration. The size of the typical fertilizer loans made by a retailer to a farmer is likely to be larger than a food loan. The capacity to repay the fertilizer loan may be dependent on agricultural production, while the food consumption loan may be paid from any source of household income. If the retailer must cut off future credit because of

416

nonrepayment of past credit, his total loss will likely be higher on a fertilizer than a food loan. This higher probability of a large loss makes credit sales of fertilizer riskier for the retailer than food credit sales. This is similarly true for suppliers credit at all levels in the fertilizer trade channel.

- The repayment of fertilizer loans made to farmers in some countries is facilitated through input-output linkages. For example, food processors, traders, cooperatives, etc. purchase farm commodities so they deduct the cost of fertilizer advanced from the purchase price of the commodities acquired. Unless the food commodity traders in The Gambia begin to acquire farm products, they will not be able to develop these types of linkages.

This analysis suggests that agents at all levels in the food commodity trade channels may enjoy some economies of scope if they expand into the fertilizer sector. But problems of smaller scale and more complicated financial arrangements may discourage them from doing so. New specialized fertilizer traders would experience problems in all three areas, and it is unclear if they would enjoy any major offsetting advantages.

There is little that policymakers can do outside of direct subsidies or granting a fertilizer monopoly to some dealer that will improve the prospects for privatizing the fertilizer trade under the particular circumstances faced by The Gambia. The best recommendation is to create a guarantee fund, as described in Chapter VII, that will increase the probability that private traders who decide to enter this risky business will have reasonable access to working capital. This analysis also suggests that the outcome of the current efforts to restructure the GCU and the groundnut processing industry will have a crucial bearing on the future of the fertilizer sector. The agents, private or cooperative, that procure and process farm commodities will have the best chance of successfully developing the fertilizer trade.

REFERENCES

AID, Critical Issues for American Investors in Gambia, Multinational Strategies, Inc. in association with LAABAT-ANDERSON Inc., October 1991, 25 pgs.

Boomgard, James J., Stephen P. Davis, Steven J. Haggblade, and Donald C. Mead, "A Subsector Approach to Small Enterprise Promotion and Research," GEMINI Working Paper No. 10, January 1991.

Central Bank of The Gambia, Annual Report, 1990/1991.

Jabara, Cathy, Economic Reform and Poverty in The Gambia: A Survey of Pre- and Post-ERP Experience, Cornell Food and Nutrition Policy Program, Monograph 8, Washington, D.C., December 1990.

Jabara, Cathy L., Marjatta Tolvanen, Mattias K.A. Lundberg, and Rohey Wadda, "Incomes, Nutrition, and Poverty in The Gambia: Results from the CFNPP Household Survey," Cornell Food and Nutrition Policy Program, Washington, D.C., July 1991.

Koch, Timothy W., Bank Management, The Dryden Press, New York, 1988.

Table VIII-1 Gross Domestic Product.[1]

INDUSTRIAL ORIGIN	1990/1991 Millions of Dalasis	Percent
	(1)	(2)
AGRICULTURE	109.67	20.45
Groundnuts	26.69	4.98
Other Crops	45.71	8.52
Livestock	24.24	4.52
Forestry	2.97	0.55
Fisheries	10.06	1.87
INDUSTRY	65.33	12.18
Manufacturing	32.13	5.98
Construction[2]	30.10	5.62
Electricity & Water	3.10	0.58
SERVICES	361.15	67.36
Trade	147.06	27.43
Groundnut Trade	9.50	1.80
Other Trade	137.56	25.65
Hotels & Restaurants	24.61	4.59
Transport & Communication	84.98	15.85
Real Estate & Business Services	33.04	6.15
Government Services	56.50	10.54
Other Services[3]	14.96	2.79
G.D.P. at Factor Cost	536.15	100.00
Indirect Taxes (net)	71.85	----
G.D.P. at Constant mkt. Prices	608.00	----

Source: Central Bank of The Gambia, Annual Report, 1990/1991.
Note 1: In millions of dalasis at constant 1976/77 prices.
2: Includes mining, which is very limited.
3: Includes banking and insurance; imputed bank service charges; personal and household services; social, recreational and related services.

Table VIII-2 The Gambia: Composition of Imports, 1988/1989.

ITEM	Millions of Dollars	Percent
	(1)	(2)
IMPORT GOODS	130.1	100.0
Food and Live Animals	40.3	31.0
Beverages and Tobacco	6.6	5.1
Crude Materials	1.3	1.0
Minerals and Fuel	9.5	7.3
Animal and Vegetable Oils	2.0	1.5
Chemicals	9.2	7.1
Manufactured Goods	33.1	25.4
Machinery and Transport Equipment	26.3	20.2
Unclassified	1.8	1.4
Other Nonfactor Services	49.0	----
TOTAL IMPORTS	179.3	----

Source: Jabara, 1990.

Table VIII-3 Survey of Economic Agents Managing the Flow of Commodities.

Economic Agent	Number of Interviews	Commodities
	(1)	(2)
Importers/Wholesalers	7	Flour/Rice
Wholesalers/Retailers	3	Flour/Rice
Retailers	2	Flour/Rice
Bakeries	39	Flour

Table VIII-4 Types of Traders and their Customers.

Type of Trader	Principal Customers
Importers	1. Reexport Traders 2. Wholesalers 3. Medium Scale Enterprises
Wholesalers	1. Retailers 2. Small Scale Reexport Traders 3. Small Scale Manufacturing Enterprises
Retailers	1. Households 2. Small Scale Manufacturing Enterprises

421

Table VIII-5 Characteristics of the Financial Contracts Used in Food Commodity Trading.

Characteristics of the Financial Contract	Contracts for:		
	Importation	Wholesaling	Retailing
	(1)	(2)	(3)
Type of Contract	Letter of Credit	Supplier Credit	Supplier Credit
Type of Financial Market	Formal	Informal	Informal
Term of Loan	30-120 days	7-60 days	1-7 days
Size of Loan	D 840,000 - 14,000,000	D 7,000 - 50,000	D 50 - 500
Interest Rate	1% per month	0	0
Fees or Implicit Charges	2-5%	2-5%	2-5%
Collateral / Substitutes	25-75% cash up-front	supplier - customer relationship	supplier - customer relationship
Delinquency Rate	None reported	Few cases reported	Few cases reported
Default Rate	None reported	Few cases reported	Few cases reported

Source: OSU survey

Table VIII-6 Sources of Finance Reported in the Small Scale Enterprise Sample.

Type of Finance	Bakeries	
	Modern	Traditional
	(1)	(2)
Initial Capital		
Personal Investment from Savings	15.4%	69.2%
Family	7.7%	11.5%
Friends	0%	0%
Formal Loans	76.9%	0%
Supplier Loans	7.7%	19.2%
Sources Of Funds		
Entrepreneurs Using Retained Earnings	100%	100%
Entrepreneurs Using Informal Loans	54%	69%
Entrepreneurs Using Formal Loans	59%	0%
Entrepreneurs Using Suppliers Credit	85%	81%
Entrepreneurs Using Customer Credit/Advance	0%	0%
Formal Loans		
Received a Loan in the Past Five Years	61.5%	0%
Received a Loan in the Past One Year	38.5%	0%
Ever Received a Loan	61.5%	0%

Source: See Chapter VI.

Table VIII-7 Savings Channels Reported in the Small Scale Enterprise Sample.

	Bakeries	
	Modern	Traditional
Savings	(1)	(2)
Share of Sample Entrepreneurs With Deposits in Formal Institutions	90.9%	0%
Informal Groups		
Entrepreneurs Participating in Informal Groups	0%	8%
Average Size of Contribution (D)	0	30
Moneykeeper		
Entrepreneurs Saving with Moneykeeper	0%	38.5%
Average size of Deposit (D)	0	120

Source: See Chapter VI.

Figure VIII-1
Flow of Commodities in the Food Marketing Channels

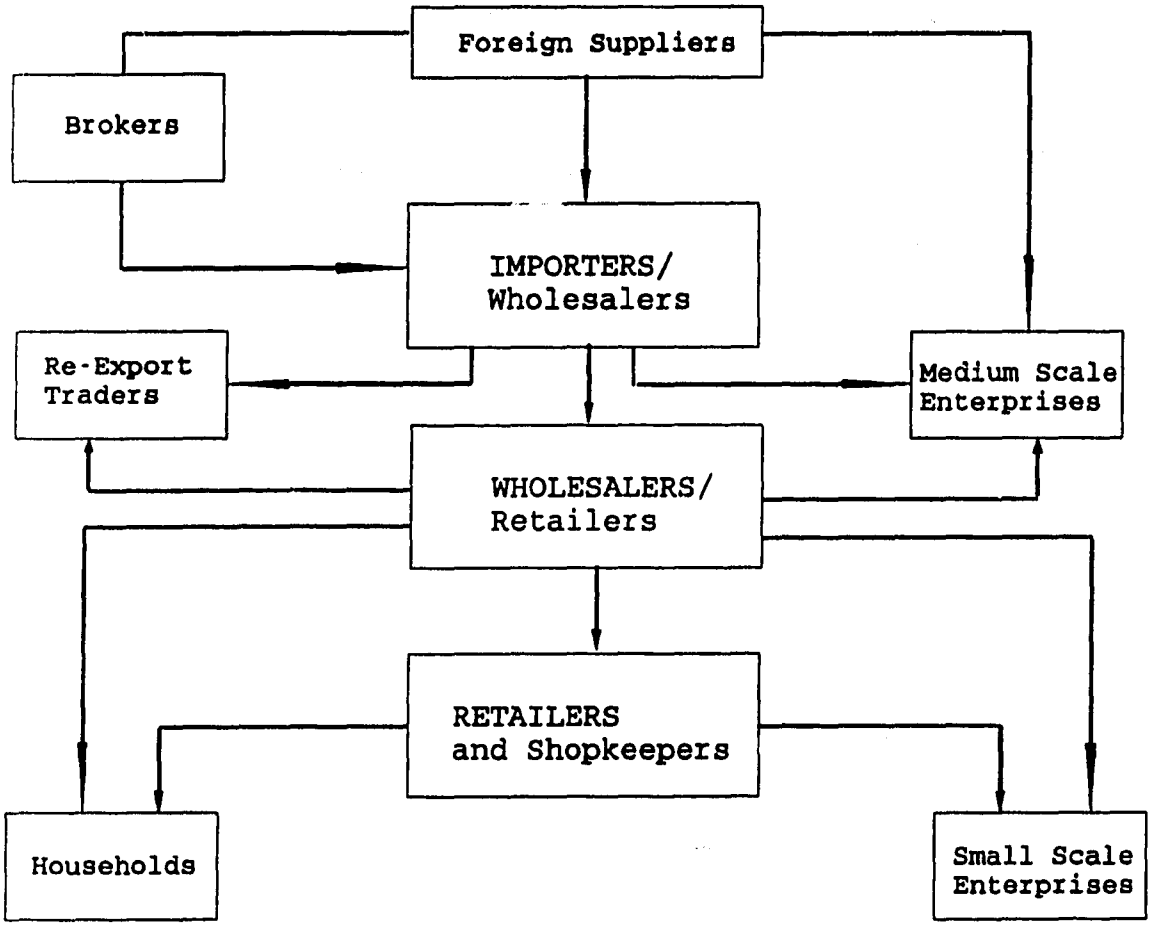

Figure VIII-2
Financial Flows in the Food Marketing Channels

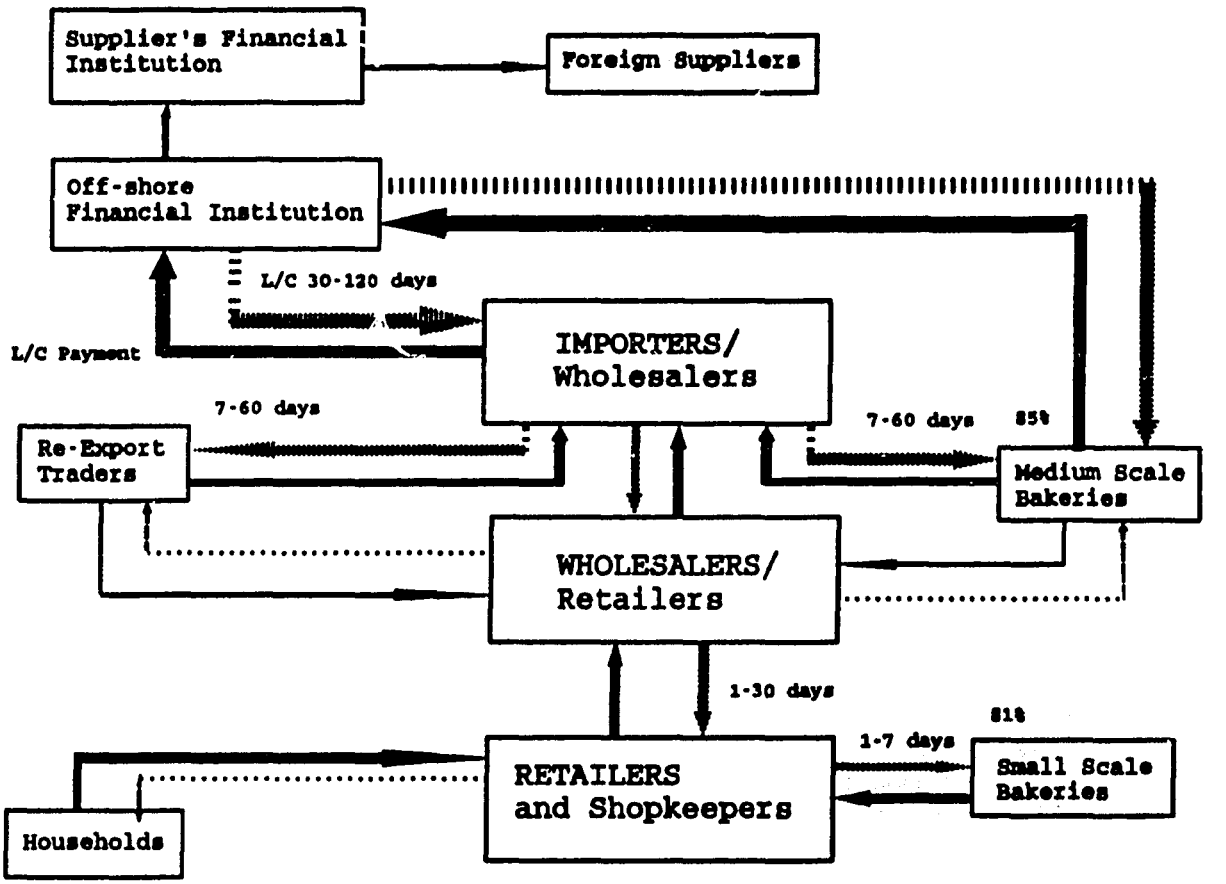

Notes:

→ Cash Payments

⋯ Supplier Credit
L/C = Line of Credit
% = Percent of enterprises with access to suppliers credit.

APPENDIX

Roster of Individuals and Institutions Consulted during Field Work on this Study

Government Agencies

E. Brewis, Managing Director, Gambia Produce Marketing Board (GPMB)

Momodou A. Ceesay, Assistant Director of Post Office

Papa A. Cham, Head Agro-Industries Development Unit, Investment Promotion Division, National Investment Board

Sene Darbbo, Director, Jahally-Pachar Rice Project

Mr. Dibba, Assistant Director, Jahally-Pachar Rice Project

Janneh Ike, Statistician, Department of Livestock Services

Sana M. Jabang, Agricultural Input Office, Department of Agricultural Services

Gabriel D. Mendy, Senior Compliance Officer, Social Security and Housing Finance Corporation

Alieu M. N'Gum, Permanent Secretary, Ministry of Finance and Economic Affairs

Sam Njie, Principle Management Officer, Human Resources Division, National Investment Board

John Sylva, Director, Indigenous Business Advisory Service

International Organizations/Contractors

Andrew T. Adam, HIID Project, Ministry of Finance and Economic Affairs

Phk. Henrick Bechtel, Technical Advisor, IFAD, Rome

John N. Butt, Price Waterhouse, Washington, D.C.

Bernd Buttemeir, Evaluation Officer, FAO, Rome

S.E. Christensen, FAO Fertilizer Project

D.J. Clifford, Animal Production Officer, International Trypanotolerance Centre

Ann Duval, World Bank Consultant for WID project

Amira Ghanim, President, Association of Gambian Entrepreneurs

William A. Hargus, Animal Scientist, University of Wisconsin, Gambia Agricultural Research and Diversification Project (GARD)

Musa Jawneh, National President, Association of Farmers, Educators and Traders

Ned Jewett, CMI Consultants, Baton Rouge, Louisiana

Lisbeth Junker, FAO Fertilizer Project

Frank W. Kooistra, University of Wisconsin, Gambia Agricultural Research and Diversification Project (GARD)

Charles Mann, HIID Project, Ministry of Finance and Economic Affairs

Pirkko Poutiainen, Programme Officer, UNDP

Caroline Robb, Poverty Alleviation Programme, UNDP

Babou Sarr, Division of Human Resource Development, UNDP

Emmet Schulte, University of Wisconsin, Gambia Agricultural Research and Diversification Project, (GARD)

Balla Silla, Project Manager, Credit Support System for Women, UNDP

Ammadou Sowe, Field Officer, FAO Fertilizer Project

Denise Williamson, World Bank, Consultant for Gambia

AID

Sarah Adams, USAID, Banjul

Philip Decosse, USAID, Banjul

428

Donald Drga, USAID, Banjul

Oren E. Whyche, Private Sector Development Advisor, REDSO/Abidjan

Fred Witthans, USAID, Banjul

Banking

David Able-Thomas, Manager, International Bank for Commerce and Industry

J. Kofi Agyekumhene, Chief Technical Adviser, Agricultural Credit Unit, Central Bank

Momodou Clarke Bajo, General Manager, Central Bank

Calum I. Buchanan, Managing Director, Standard Chartered Commercial Bank

Edward E. Fillingham, Senior Advisor, Central Bank

Momodou Foon, APEX funds, Central Bank

M.J.A. Knight, Managing Director, Meridien Bank Gambia Limited

Robert Maddox, Technical Advisor to GCDB

Nuha Marenah, Manager, Loan Recovery Department, GCDB

Abdou A.B. Njie, Governor, Central Bank

Alhaji Tafsir Samba Alieu Njie, General Manager, Continent Bank, Ltd.

Haddy Njie, Manager, Banking Supervision Department, Central Bank

Pa Macoumba Njie, Commercial Manager, Gambia Commercial and Development Bank Ltd.

Ian Roxton, Advisor, Banking Supervision Department, Central Bank

David Thwaites, Managing Director, Gambia Commercial and Development Bank

Graham Yates, Deputy Manager, Standard Chartered Bank Gambia Limited

Trader/Private Sector

Farouk Ayad, Manager, Textard Co. Ltd., Textile Importer

Mamadou Bah, FAO Fertilizer Dealer

Alh. Falley Baldeh, FAO Fertilizer Dealer

Saikou Baldeh, FAO Fertilizer Dealer

Antoine Banna, Manager, George Banna & Co., Textile/Food Commodities

Mamodou Benta, Daadema, Flour Importer

Reynold Carrol, HORTMARC Ltd.

Momodou A. Ceesay, Managing Director, Gambia Horticultural Enterprises

El Hadj Karamo Cessay, Rice Wholesaler/Retailer

Amadu Fall, Rice Retailer

C.O. Fall, Groundnut Trader

Baboucar B. Gai, Commercial Manager, Gambia Cooperative Union Ltd. (GCU)

Isatou Jack, HORTMARC Ltd.

Amadou M. Jallow, General Manager, Yams Agricultural Enterprise Ltd.

Musa Jallow and Samballa Jallow, Private Trader

Alh. M. Jammeh, Groundnut Trader

Tider Janko, FAO Fertilizer Dealer

Madam Job, Fruit and vegetable buying agent, major buyer for Senegambia Hotel

Ebrima Jobe, Groundnut Trader

Fotou Jobe, FAO Fertilizer Dealer

Sheriff John, Groundnut Trader

M.H. Kebbeh, Director, Amdalaye Trading Enterprises, Ltd.

Mohammad Kebbah, Rice, Oil Importer/Wholesaler (Honorary Counsel of Pakistan)

Hans W. Kemper, Purchasing Manager, Senegambia Hotel

Binta Khan, Coordinator, Women's Horticultural Cooperative, Gambia Cooperative Union Ltd. (GCU)

Mamodou Kolly, FAO Fertilizer Dealer

Saikou Komma, FAO Fertilizer Dealer

Kebba Kora, FAO Fertilizer Dealer

M.M. Marong, Groundnut Trader

Hassib W. Massry, Manager, T. Massry Co. Ltd.

Alieu A. M. MBoge, Rice Importer, President of Gambia Chamber f Commerce and Industry, Honorary Consul of the Kingdom of Thailand

Sayed Moukhtara, Moukhtara Holding Co. Ltd.

J. Najiib, Groundnut Trader

A.B. Dandeh Njie, Tanji Farm

B.M. Njie, Njie & Sons, Rice Importer and Wholesaler

Mohammed Njie, Manager, Musa Njie & Sons, Flour

Dr. Lamin Saho, Gambia Export and Trading Company

Mariamma Saine, FAO Fertilizer Dealer

Suruwa Sanyang, FAO Fertilizer Dealer

Hadday Secca, FAO Fertilizer Dealer

Jim Secca, FAO Fertilizer Dealer

Rohit Shah, Radville Farms Ltd.

431

Momodou Singateh, Deputy General Manager, Gambia Cooperative Union (GCU)

Pa Sinyang, Financial Controller, Gambia Cooperative Union (GCU)

Sidy Sugufara, Rice Wholesaler/Retailer

Karamo Trerra, Credit Officer, Gambia Cooperative Union Ltd. (GCU)

Bassamah Waggeh, FAO Fertilizer Dealer

Mammadou Waggah, Private Trader for Rice and Fertilizer

NGOs/PVOs

Mariama Ashcroft, Gambia Women's Finance Association

Brooks E. Crichlow, Assistant Representative, Catholic Relief Services

Dodou Darbo, Executive Secretary, AFET

Burang Goree-Ndiaye, Executive Secretary, TANGO (The Association of NGOs)

Helmi Govers, UNV, Programme Officer, TANGO (The Association of NGOs)

Musa Jawneh, Association of Farmers, Educators and Traders (AFET)

Chuga M.K. Joof, Coordinator, National Association of Credit Unions of the Gambia (NACUG)

Mrs. Maria tou Loum, WISDOM

Jean-François LeGrand, Technical Advisor of Village Savings and Credit Associations (VISACAs), Sapu

Nimal Martinus, Program Director, WorldView International Foundation

Aminatta L.R. N'Gum, Chairperson, Gambia Women's Finance Association (GWFA)

Solomon J.E. Owens, Projects Supervisor, Catholic Relief Services

Mr. Samoo, Credit Officer, GWFA

Jeffrey D. Saussier, Deputy Director, Action Aid

Aboubacry Tall, Field Office Director, Save the Children, USA

Fatounata Tambafang, Treasurer, Gambia Women's Finance Association (GWFA)

Gladwin Williams, Consultant to TANGO