Operational Data

PN-ABJ-032
73216

BLOCK ICE MAKING

[illegible] International Cooperation Administration.
[illegible] Technical Aids Branch. NTIS
Block Ice Making; Operational Data. Aug. 1956.
30 p.

August 1956

Reference Center
Room 1653 NS

Technical Aids Branch
Office of Industrial Resources
INTERNATIONAL COOPERATION ADMINISTRATION
Washington 25, D. C.

F O R E W O R D

To produce blocks of ice with consistent quality and at a reasonable unit cost, the basic equipment, materials and labor must be applied efficiently and in proper balance.

Data are provided in this report on the basic investment capital, machinery, equipment, factory facilities and staffing required to produce ten tons of block ice daily. In general, these requirements data relate to the economic minimum size operation.

This brochure is one of a series based on overseas requests received by ICA's Technical Inquiry Service. The reports are prepared for ICA under contract with the Office of Technical Services, U. S. Department of Commerce, by members of its own staff, or by private engineers, management consultant firms, or research institutes under contract to the Office of Technical Services.

THIS REPORT IS DESIGNED ONLY TO PROVIDE A GENERAL PICTURE OF THE FACTORS THAT MUST BE CONSIDERED IN ESTABLISHING AND OPERATING AN ARTIFICIAL ICE PLANT. IT SHOULD PROVE USEFUL IN CREATING INTEREST IN MODERNIZING OLD PLANTS OR IN ESTABLISHING EFFICIENT NEW ONES. HOWEVER, IT IS IMPORTANT TO NOTE THAT IN MOST CASES, PLANS FOR ACTUAL INSTALLATIONS WILL REQUIRE SPECIFIC EXPERT ENGINEERING AND FINANCIAL ADVICE IN ORDER TO MEET SPECIFIC LOCAL SITUATIONS.

For further information and assistance, readers should contact their local Productivity Center, Industrial Institute, Servicio, or United States Operations Mission.

ACKNOWLEDGMENTS

The author wishes to extend his grateful thanks to the members of the York Corporation, who gave so freely of their time and experience in gathering data for the estimates of equipment requirements and cost, overhead rates, capital requirements, and for permission to reproduce most of the sketches included herein; to the Secretary of the National Association of Ice Industries for his initial guidance and final proof-reading; and to the members of the Frick Company for their helpful guidance and forebearance in the many questions posed for them to answer.

INTERNATIONAL COOPERATION ADMINISTRATION
OFFICE OF INDUSTRIAL RESOURCES
TECHNICAL INQUIRY SERVICE
IN COOPERATION WITH
U. S. DEPARTMENT OF COMMERCE OFFICE OF TECHNICAL SERVICES (OTS)

IR-16879 PR

BLOCK ICE MAKING

INTRODUCTION

Primitive man discovered that by burying freshly killed meat in snow or ice it could be preserved indefinitely. Nero, according to history, had snow cellars built high in the Alps where ice and snow were stored for use during the summer months.

The ancient Egyptians used a method of cooling liquids by evaporation. This method of cooling is being used at present by many natives of India. It was accomplished by filling jars with water that had been previously boiled and cooled, and placing them on beds of straw or rushes located on roof tops where they were left exposed to the cool night winds. In the morning, the cooled vessel and water were placed in earth caves lined with wet leaves to maintain their lowered temperatures.

With the advance of civilization, natural means of cooling and preserving are no longer sufficient. Today's demand requires the manufacture of ice on a 24-hour a day, year-round basis, and in quantities greater than can be economically harvested, stored and shipped from nature's ice fields. Therefore, there is ever increasing growth and expansion of the manufacture of artificial ice.

The use of ice rather than mechanical refrigeration for the preservation of certain vegetable and sea foods, and for cooling and serving of liquids and foods is a general practice.

ASSUMPTIONS

In order to more clearly picture the size of the artificial ice plant described on the following pages, these general assumptions have been made:

1. Since ice plants are made in various capacities and the plant size is dependent upon location, need, and available capital,

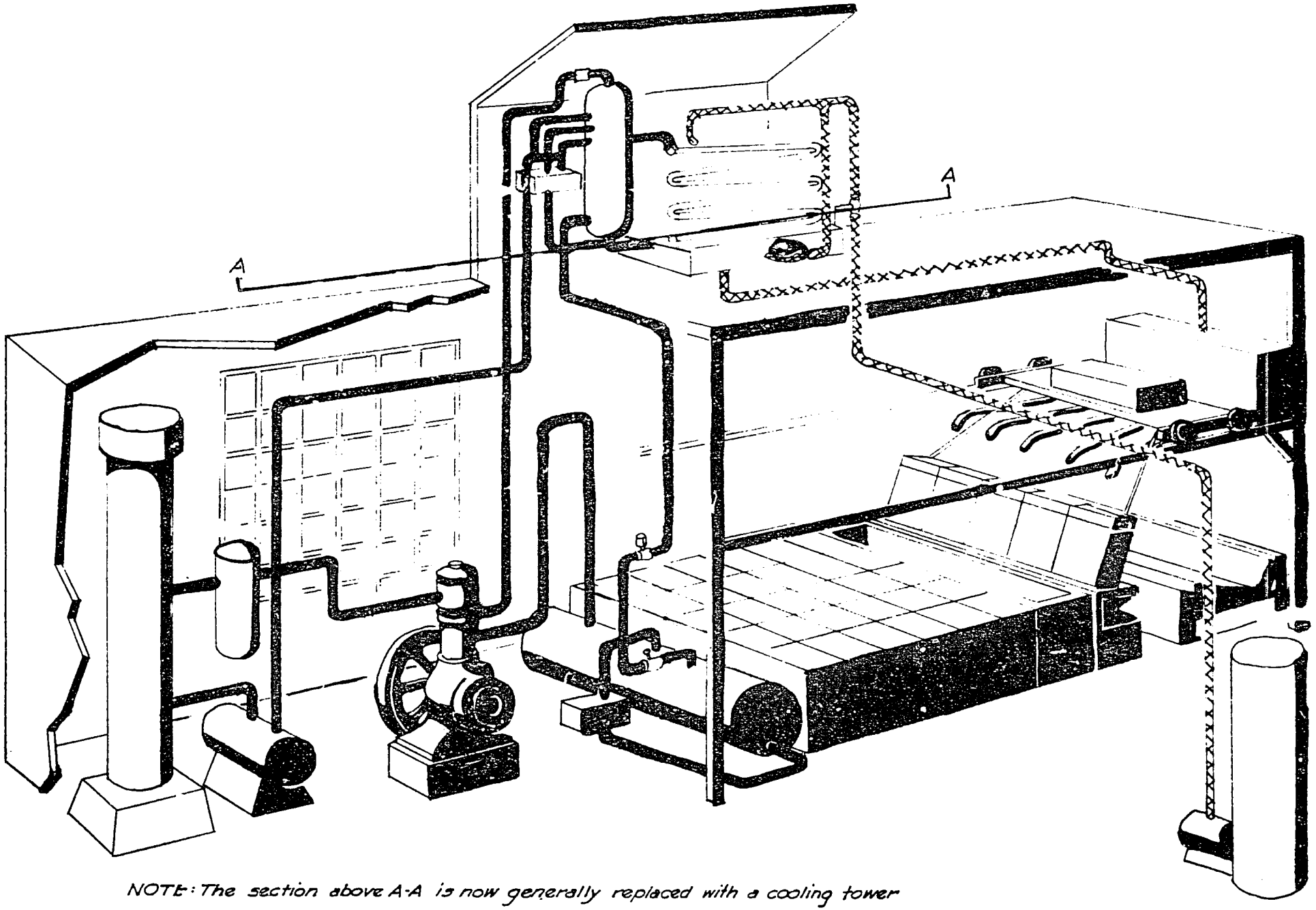

NOTE: The section above A-A is now generally replaced with a cooling tower

FIGURE 1. Schematic diagram of a typical ice plant

this report is based on a plant capacity of 10 tons which should be economically sound in most any geographical area.

2. Adequate and suitable water, electrical, sewage and transportation facilities are, or can be readily made, available at the site.

3. The market is, or can be readily made, available.

4. The plant will operate 3 eight-hour shifts per day, 7 days a week.

5. Labor cost is based on a force of one laborer per shift, and one manager-engineer.

6. Equipment costs illustrated are based on 1956 prices delivered in the United States.

7. The plant layout illustrated, and the method of manufacturing described on the following pages are based on a dual pressure, ammonia compression (brine race) system.

8. Since the only raw material required is water, no provisions have been made for a warehouse or stockroom for incoming materials, and the water used has been included under "Overhead".

PRINCIPLES OF ICE MANUFACTURING

Through the years, since Dr. William Cullen first invented an ice making machine in 1755, the processes of ice manufacturing have been continually refined and improved until at present, the ammonia compression system is the one most prevalently used.

Since water is the only raw material used in the manufacturing of ice, there is no need for a warehouse or stockroom. Water must first be treated and filtered. If the water used is obtained from natural sources such as wells, rivers or lakes, it must first be treated to remove impurities of a bacterial nature. Following this, the water must again be treated with a softening process to remove dissolved mineral compounds such as calcium, magnesium, and iron. If, however, the water is obtained from an approved municipal supply system, only the softening process need be employed.

After the water has been softened, it is placed in slightly tapered cans holding 300 pounds each, which are then lowered into the freezing tank (Figure 2). This tank is filled with a non-freezing salt brine which is held at a temperature of from 10° to 20° F. The cans are placed in rows, and between each row of cans are continuous coils of closed pipe through which the ammonia passes. (Figure 3 shows a newer assembly method using a vertical trunk system where the coils are massed). The ammonia starts out as a liquid, and expands into a vapor as it absorbs heat from the brine surrounding the coils. The brine in turn absorbs heat from the water in the cans. The water in the cans is cooled to 32° F. and begins to freeze. Since the heat is absorbed from

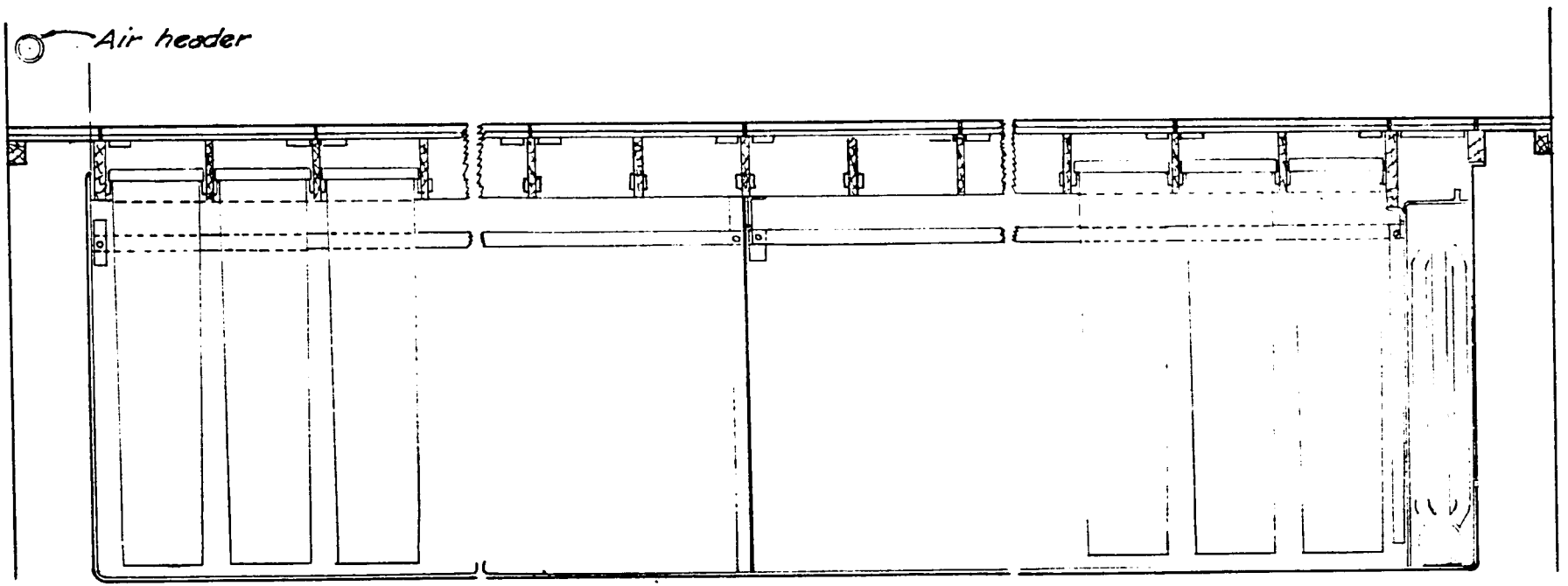

FIGURE 2. Diagram of a typical York Individual Can Freezing Tank

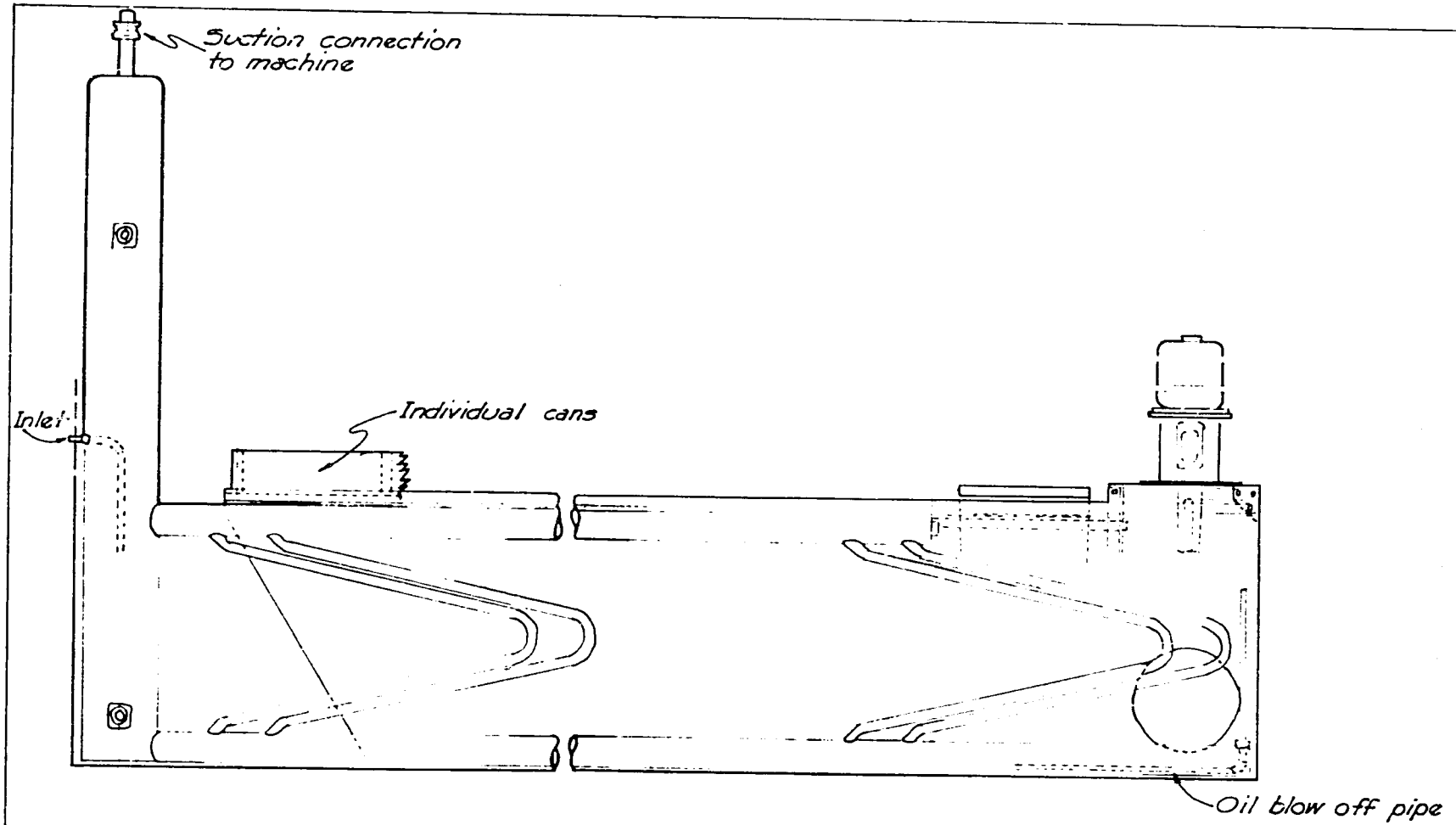

All single pass tanks to slope downward toward the agitator 1" in 40' plus 1" total

FIGURE 3. Arrangement of coils in a York Vertical Trunk Tank

IR-16879 FR

the water near the sides of the cans first, ice initially forms on the sides of the cans and freezes slowly inward toward the center. As the freezing continues, the ice thickens until finally it closes to the center of the can and becomes a solid block. However, the water must be kept in motion or otherwise the ice will be cloudy and opaque. On moving bodies of water, such as rivers and lakes, clear ice is formed. This principle in the forming of clear ice is applied in the process of making manufactured ice. Agitation, as this process is called, is accomplished by compressed air which is introduced into the can near the bottom and bubbles up through the water as it freezes into clear ice. This principle of agitation is, in effect, a purification process. Agitation not only insures the purity of manufactured ice, but it accounts for its crystal clarity as well. As the ice freezes inside the can, the compressed air agitation frees it of mineral matter and dissolved air which is originally in the water. During the agitation process, the air bubbles and mineral matter are concentrated in the center of the can. If this didn't take place, the ice would be cloudy and white. The water which remains unfrozen in the middle of the can (due to the constant agitation by compressed air) contains a concentration of the minerals removed from the frozen water. This gallon or two of unfrozen water in the center of the block, called the core, is then removed by means of a suction pipe and replaced with fresh water. The freezing is then continued until the center portion of the ice block is frozen solid.

After the ice is frozen, the cans are removed from the brine tank and allowed to temper in the air for a short period. At this time, the cans are dipped in a water tank which loosens the block of ice so that it can be easily removed from the can. The cans are then tipped, and the ice blocks slide out on a runway that takes them to the storage room. It should be noted at this time that every stage of the manufacturing process is completely mechanized and that the ice is untouched by humanhands.

At times, it will be noticed that an opaque streak, known as the "feather", will be located down the center of the ice cakes. This streak merely indicates where the air has entered to agitate the water during the freezing process.

After the blocks have been manufactured, they are stored to await distribution. The storage rooms are usually kept at about 22° F., and the walls, floor, and ceiling are insulated to keep the cold in and the heat out. Because low temperatures can now be artificially maintained, there is no longer a need for packing sawdust or a similar material between the blocks.

Before being loaded for consumer delivery, the blocks are usually scored (partially cut) by machinery into 25, 50, or 100 pound units. Since allowance is made in freezing and scoring for meltage during delivery, and since the scoring marks cannot be removed, the customer is not only assured of getting correct weight, but is insured against loss due to melting as well.

PRINCIPLES OF REFRIGERATION

Refrigeration, by natural or artificial means, is the process of removing heat from a material, or substance, so as to lower its temperature. This is normally accomplished by transferring heat from a material at a higher temperature to a substance at a lower temperature until both materials are at the same degree of temperature. The greater the difference in temperature between the two materials, the greater the speed at which the heat transfer will take place.

Heat transfer is accomplished by two primary methods; conduction, and convection. Convection is the transfer of heat by means of a liquid or gas which acts as a carrier agent between two substances at different temperature levels, and is the method used in refrigeration and the manufacture of ice. The carrier agent absorbs heat from the hotter surface, expands and becomes lighter, and as a result rises. The now warmer agent comes into contact with the cooler substance and loses some of its heat. It then contracts, becomes heavier, and falls. Thus, the difference in temperature between the two substances causes the carrier agent (refrigerant) to circulate, and in so doing, equalize the temperature between the two. However, in the manufacture of ice, the process of heat removal must continue after the temperatures between the substances and the refrigerant are equal. Therefore, the refrigerant must be moved, the heat extracted, and the refrigerant returned to continue its job of heat extraction. This process of heat absorption and extraction constitutes what is known as a cycle of refrigeration.

For the effective employment of the refrigeration cycle in the manufacture of ice, four essentials are required. They are the evaporator, compressor, condenser and expansion valve (Figure 4).

Evaporator

The evaporator for an ice plant is located in the freezing tank, and contains unsaturated vapor which extracts heat from the area around it.

Compressor

The compressor serves to remove the saturated vapor from the evaporator, and to change it from a low pressure, low temperature gas to a high pressure, high temperature gas. The high temperature of the gas is obtained by the process of compressing the gas into a high pressure.

Condenser

After the gas leaves the compressor, it goes to the condenser where the heat that was added to the gas is removed and carried off by cooling water. This, in turn, changes the gas to a liquid.

Expansion Valve

The function of the expansion valve is to change the high pressure liquid from the condenser to a low pressure, low temperature gas which is ready to return to the evaporator for further absorption of heat.

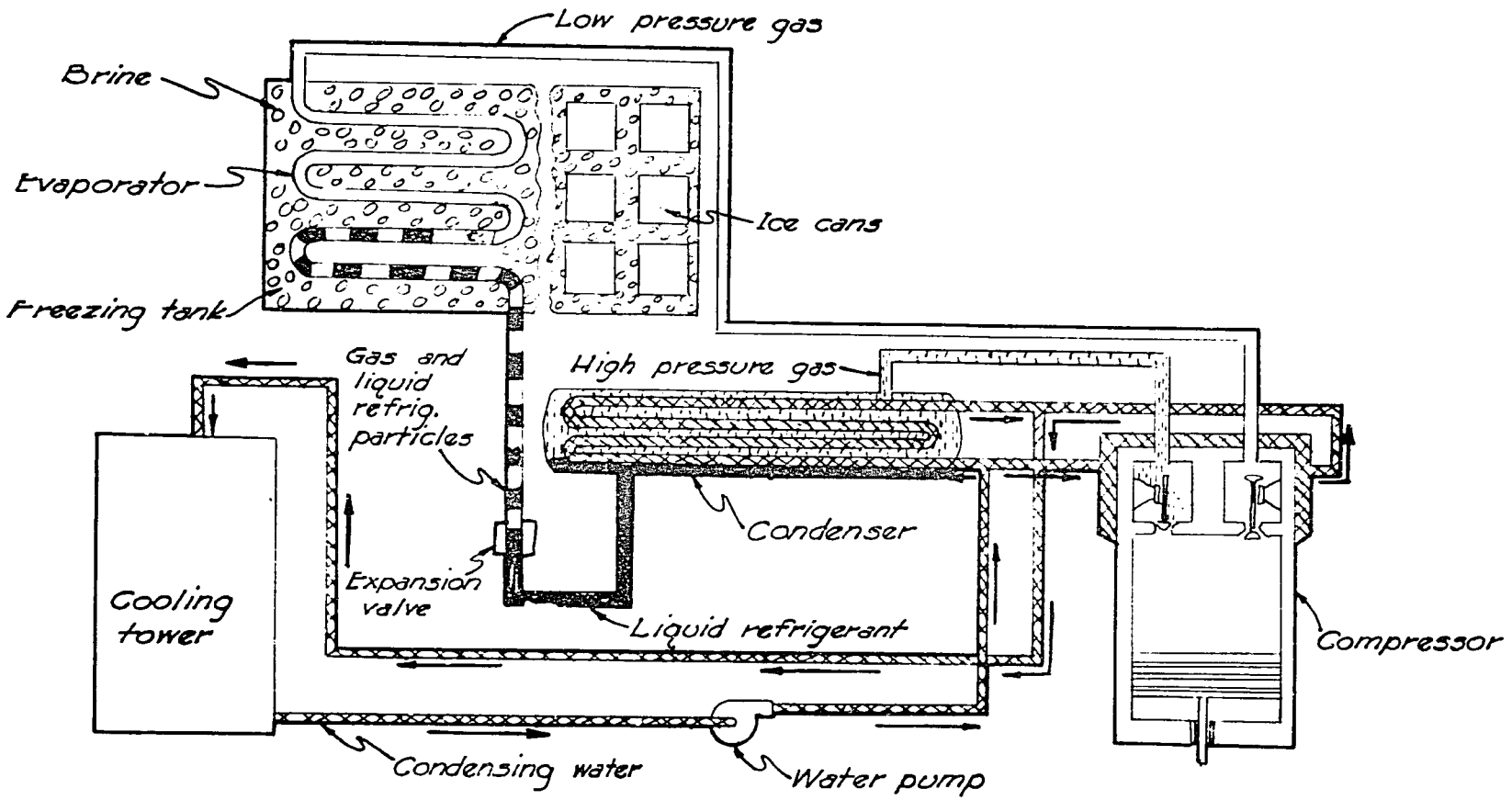

FIGURE 4. Typical refrigeration system

IR-16879 PR

Other important elements of an ice plant are the water pump which passes the cooling water between the condenser and the cooling tower, and the cooling tower which extracts the heat from the cooling water.

BUILDING REQUIREMENTS

Plant Location

The plant location for an installation of this type is extremely variable, since considerations such as a railhead for the delivery of incoming raw materials and export of the finished product are unnecessary. Water, the only raw material, is the primary consideration for plant location, and this is not demanding in that the water to be used can be obtained from either municipal sources, or natural locations such as wells, streams and lakes.

Considerations such as access for laborers are also negligible in that most plants with capacities up to 50 or 60 tons a day can be operated by from one to two men per working shift.

Plant Layout

Figure 5 shows a plan view of a typical layout which can be built into a two-story building with a one-story storage shed attached. This plan view shows building dimensions and equipment location. In Figure 6 only the structural design and elevations are shown.

Floor space allowances for a 10 ton plant are as follows:

	Sq. Ft.
1. Freezing Tank, 14' - 0", by 25'-2"	350
2. Machine Room, 12'-6", by 25'-2"	325
3. Dump Platform, 11'-4", by 14'-0"	154
4. Office, 11'-4", by 12'-6"	143
5. Ice Storage, 15'-9", by 30'-0"	480
6. Loading Platform, 6'-0", by 30'-0"	180
Total	1632 Sq. Ft.

NOTE: The above dimensions are approximate, and have been rounded off to the nearest foot for convenience in calculating the square footage. Building cost is estimated to be $10,000 (to include wiring for power and light, sewers and sewer drains, ice chutes, painting, transformers and thermometers, erection, excavating and foundations).

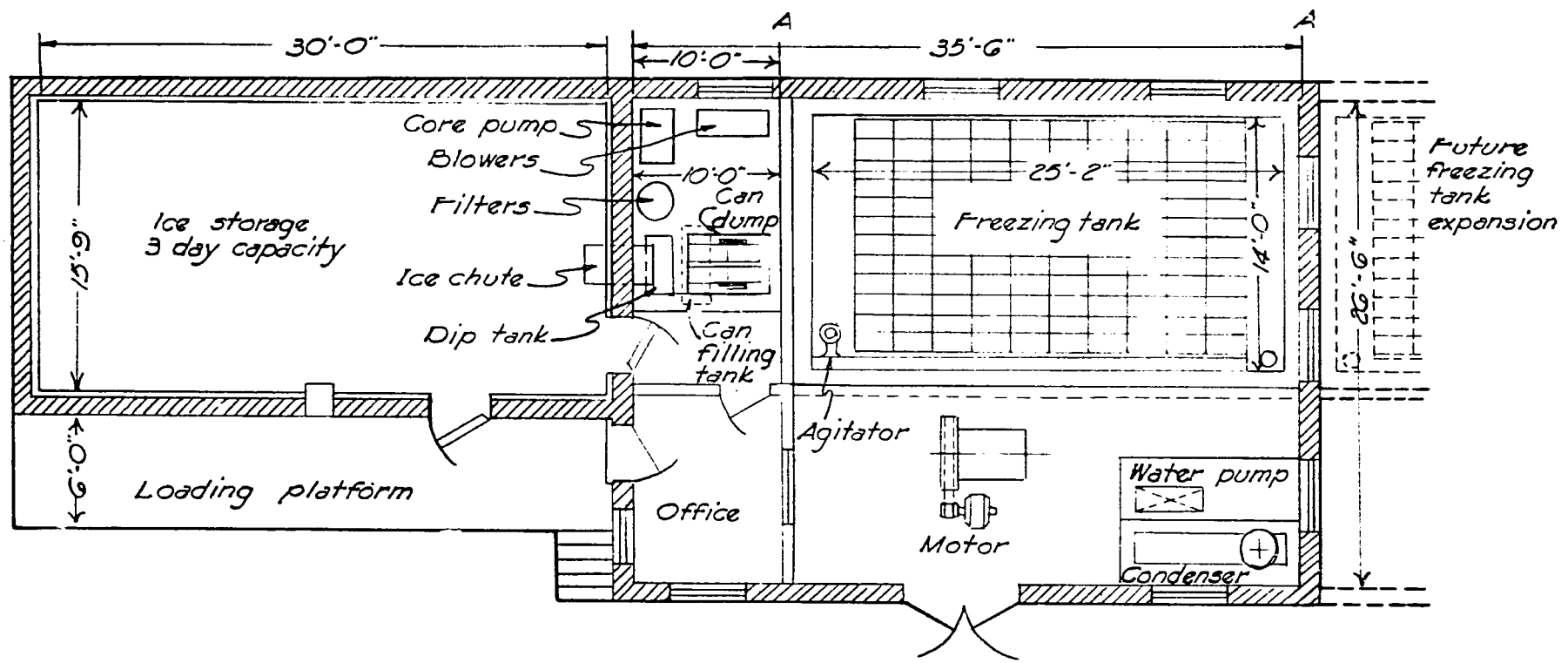

NOTE: Another and probably more economical means of expansion would be to expand the freezing room in the direction of A-A and enlarge the storage room in the same direction at the same time.

FIGURE 5. Plan view of a typical 10 ton ice plant

IR-16879 PR

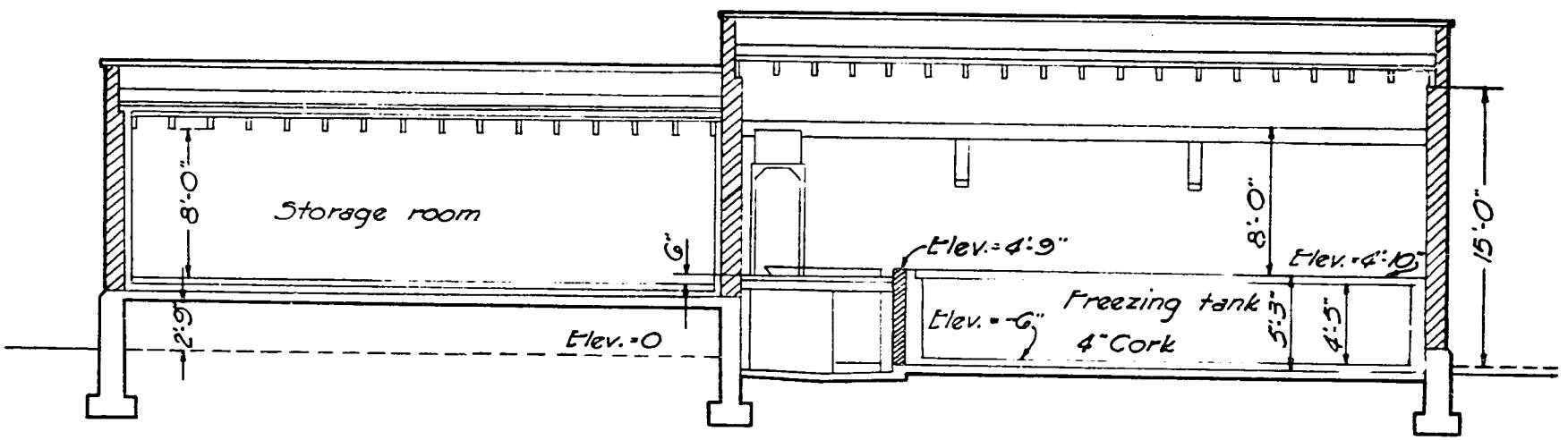

FIGURE 6. Elevation view of a typical 10 ton ice plant

IR-16879 PR

EQUIPMENT REQUIREMENTS

Compression Side

		Estimated Weight (lbs.)	Estimated Cost
1.	Ammonia Compressor 6½" x 6½" Belt driven @ 360 RPM, with V-belt drive	3,400	$2,600.00
2.	Compressor Motor 30 HP, 3 phase, 60 cycles 220 volts, with manual, reduced voltage starter	1,200	1,300.00
3.	Float Regulator	300	300.00
4.	Condenser 20" x 12'-0" open shell and tube type	3,000	1,000.00
5.	Purge Drum 5" x 24" Non-thermostatic type (hand operated)	125	250.00
6.	Mains Discharge and liquid piping	500	400.00
7.	Piping Air, brine, and water; for condensers, machines, raw water, and water and drain lines	300	150.00
		8,825	$6,000.00

Freezing System

		Estimated Weight (tons)	Estimated Cost
1.	Freezing Tank, Vertical Trunk type 25'-2" long, 14'-0" wide, 53" deep; 10 cans long, 12 cans wide	11,000	$2,200.00
2.	"V" Type Freezing Tank Coils 468 feet, 1¼" pipe	2,000	500.00
3.	Suction Trap 8" x 10'-0"	300	250.00
4.	Vertical Agitator 10" DC to 2 or 3 phase, 60 cycle, 220-240 volt, 2 horsepower motor with starter	1,000	950.00

		Estimated Weight (tons)	Estimated Cost
5.	Framework 1 3/4" and 7/8" oak, and covers, oak 7/8" top and bottom course; 180 linear feet	1,800	125.00
6.	Retaining Device Hold down springs	25	60.00
7.	Ice Cans 122, 11" x 22" x 51½"; Number 16 Gauge	8,500	1,650.00
8.	2 Can Dump Rocking dip tank type for 2 cans	400	200.00
9.	Dip Tank 2-Can	900	180.00
10.	Can Filling Tank 2-Can	400	550.00
11.	Core Syphoning Unit D. C. to 1/2 H.P. Polyphase, 1200 R.P.M. Motor	200	200.00
12.	Core Sucker, Core Pocket Refiller and Thawing Needle	30	100.00
13.	Hose for Sucker and Refiller 2-25 foot lengths, 1¼" hose	20	150.00
14.	Crane, push type with electric hoist, Wiring and Lifting Bar Half Ton, 110, 220 volts, A.C. 3 phase, 60 cycle	1,300	1,500.00
15.	Crane Track and Wires 70 feet, 3" Track Channel	250	150.00
16.	Suction Mains	130	130.00
		28,255	$8,895.00

Low Pressure Air System

1.	Laterals, Headers, Tubes and Connections For 120 cans	300	$ 240.00
2.	Blower, with Starter D. C. to 1 H.P. Motor	700	550.00
		1,000	$ 790.00

Water Circulating Apparatus

		Estimated Weight (tons)	Estimated Cost
1.	100 G.P.M. Pump For 45 foot head, Direct connected to 3 H.P., 220 volt, 3 phase, 60 cycle, 1750 R.P.M. motor with starter	300	$ 400.00
2.	Cooling Tower Unit	1,000	1,000.00
		1,300	$1,400.00

Storage Room Piping

1.	422 Feet of 2" Piping	1,600	$ 300.00
		1,600	$ 300.00

Miscellaneous Materials

1.	Panels and Switchboard	?	$ 500.00
2.	Insulation	?	2,500.00
3.	Fire Fighting Equipment	?	250.00
4.	Safety Helmets	?	10.00
5.	Maintenance Tools	?	50.00
6.	Office Equipment	?	300.00
7.	Cleaning Equipment	?	200.00
			$3,810.00

Total Cost of Equipment

1.	Compression Side		$6,000.00
2.	Freezing System		8,895.00
3.	Air System		790.00
4.	Water Circulating Equipment		1,400.00
5.	Storage Room Piping		300.00
6.	Miscellaneous		3,810.00
		40,980	$21,195.00

NOTE: The above estimates do not reflect installation cost, or freight charges. Based on current figures, the following additional expenditures can be expected to raise the total cost as follows:

1.	Cost of Equipment	$21,195.00
2.	Installation	5,000.00
3.	Freight Charges Based on 41,000 pounds	2,500.00
	Total Cost	$28,695.00

LABOR REQUIREMENTS

The labor force required for the operation of this plant is a variable factor dependent upon design and capital outlay. With proper design, this plant can be operated by one man working an eight (8) hour shift, although normal operations call for a minimum of one laborer per shift, with three shifts per day. These figures are based on the inclusion of fully automatic equipment such as group can fillers, mechanical lifts and ice dumps, and automatic can fillers. In the event, however, that initial capital outlay must be held to a minimum, these elements can be replaced by truck hoists (Figure 7) which remove, dip, and dump one can at a time (and are manually operated) and manual filling of cans, etc. In this event, an additional labor force of one or two men would be required.

Based on a fully mechanical plant, the work force would be as follows:

Position	Duties	Estimated Monthly Salary
Manager-Engineer (1) (works one 8-hour shift per day)	Manage plant, keep records, make sales, maintain equipment, be available for night calls for minor repairs.	$ 350.00
Laborers (3) (one per shift)	Operate machines to load and set ice cans, raise, thaw, dump, and store ice.	750.00
Truck Driver (1)	Deliver orders	150.00
	Total Monthly Salaries	$1,250.00

OVERHEAD RATE

Estimated Depreciation

Item	Cost	Estimated Life (years)	Estimated Yearly Depreciation
Building	$10,000.00	25	$ 400.00
Equipment	17,385.00	15	869.25
Miscellaneous Equipment (Insulation, Office Furniture, etc.)	3,810.00	15	247.65
Maintenance (Based on 3% of building & Equipment cost, or 0.03 x $31,195.00)	31,195.00		935.85
			$2,452.75
Estimated monthly depreciation and maintenance	$\frac{\$2,452.75}{12}$		$ 204.40

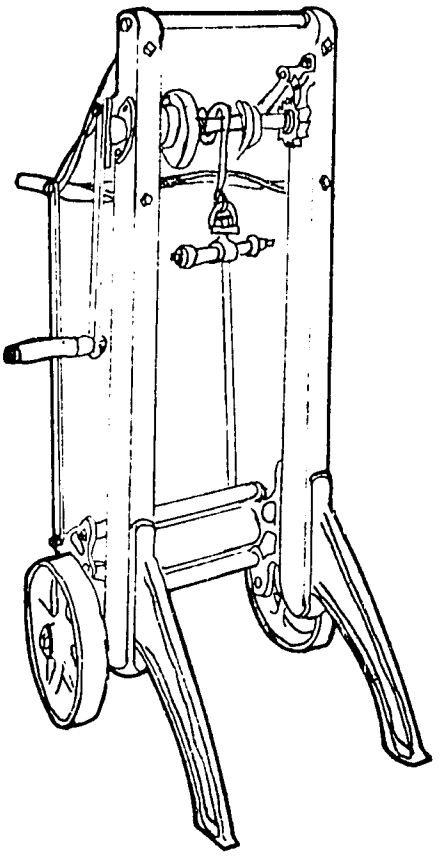

FIGURE 7. Manually operated truck hoist

Overhead

Electricity

1. Compressor - -	31	Brake horsepower	@ /.87	efficiency- - -	35.6 H. P.
2. Agitator - - -	2	" "	@ /.78	" - - -	2.6 H. P.
3. Blower - - - -	1	" "	@ /.74	" - - -	1.4 H. P.
4. Pump - - - - -	2½	" "	@ /.79	" - - -	3.1 H. P.

42.7 H. P. x 0.746 equals 32 kw per hr. input

$$\frac{32 \text{ kw} \times 24 \text{ hrs.}}{10 \text{ tons}}$$ equals 76.8 kwh per ton of ice

76.8 x $0.02 (cost/kw) equals $1.54 /ton of ice

or,

76.8 x 300 (tons / month) X $0.02 (cost/kw) equals 23,040x0.02
" $460.80/month

Water

$0.05/1000 gallons (at the rate of 100 cu. ft. of water/ton of ice)

100 cu. ft./ ton of ice x 7.5 gal. / cu. ft. equals 750 gal./ton of ice

750 gal./ton of ice x 10 tons/day equals 7,500 gal./day

7,500 gal./day x 30 days/month equals 225,000 gal./month

$$\frac{(225{,}000 \text{ gal./month})}{1{,}000} \times \$0.05$$ equals $11.25 per month

Total Estimated Monthly Overhead

1. Electricity -	$460.80
2. Water -	11.25
3. Depreciation -	204.40
	$676.45

NOTE: The above estimated depreciation estimates were based on the following figures:

1. Building - - - - - - 4% annually on the total building cost.
2. Equipment - - - - - 5% annually on the total equipment cost.
3. Miscellaneous Equipment - - - 6½% annually on total cost.
4. Maintenance - - - 3% annually on the total building and equipment cost.

Maintenance cost will vary between 1% and 5% annually dependent upon geographical location and care of equipment, but 3% has been used as an overall average.

Cubic feet of water per ton includes allowances for all temperature variables.

UNIT COST OF MANUFACTURING

Item		Estimated (Per Ton of Ice)
Labor: $\frac{\$1,250/\text{month}}{10 \text{ tons/day} \times 30 \text{ days/month}}$	equals	$4.17
Overhead (to include Water): $\frac{\$676.45/\text{month}}{10 \text{ tons/day} \times 30 \text{ days/month}}$	equals	2.26
Estimated Unit Cost of Manufacturing		$6.43

CAPITAL REQUIREMENTS

Working Capital		Estimated Cost
Material		--------
Water only which is included under operating expenses		
Operating Expenses (1 month)		
Labor	$1,250.00	
Water	11.25	
Electricity	460.80	$1,722.05
Total Working Capital (Exclusive of insurance, taxes, etc.)		$ 1,722.05
Fixed Assets		
Land		--------
Building		$10,000.00
Equipment (Including shipping cost and installation)		28,695.00
		$38,695.00
Total Capital		
Working Capital		1,722.05
Fixed Assets		38,695.00
Reserves (operating reserves, incidental expenses, etc.)		10,000.00
Total Capital		$50,417.05

SALES REVENUE

For purposes of comparative values, two estimated revenues will be illustrated; one based on a plant production rate of 100%, and one based on a plant production of 50% of full capacity.

Sales Revenue based on 100% production

Monthly production
10 tons per day x 30 days equals 300 tons/month

Monthly revenue

$$\frac{300 \text{ tons} \times 2{,}000 \text{ lbs./ton}}{100} \times \$1.00 \text{ per 100 lbs. equals}$$

6,000 x $1.00 equals $6,000.00

Yearly production
10 tons/day x 365 equals 3,650 tons/year

Yearly Revenue

$$\frac{3{,}650 \text{ tons} \times 2{,}000 \text{ lbs./ton}}{100} \times \$1.00 \text{ per 100 lbs. equals}$$

73,000 tons x $1.00 equals $73,000.00

Sales Revenue based on 50% Production

Monthly production
5 tons/day x 30 days equals 150 tons/month

Monthly Revenue

$$\frac{150 \text{ tons} \times 2{,}000 \text{ lbs./ton}}{100} \times \$1.00 \text{ per 100 lbs.}$$

$3,000 x $1.00 equals $3,000.00

Yearly production
5 tons/day x 365 days equals 1825 tons/year

Yearly Revenue

$$\frac{1825 \text{ tons} \times 2{,}000 \text{ lbs/ton}}{100} \times \$1.00 \text{ per 100 lbs.}$$

36,500 x $1.00 equals $36,500

NOTE: The figure $1.00 per 100 lbs. is an estimated value.

PROJECTED PROFIT AND LOSS

Again, two estimated statements of profit and loss will be illustrated based on the 50% and 100% of capacity rates of production used in the estimation of sales revenue.

Profit and loss based on 100% production

Estimated yearly sales revenue	$73,000.00
Less cost of production ($6.43 per ton)	23,469.50
Operating Profit (before payment of principal and interest on loan, taxes and insurance)	$49,530.50

Profit and loss based on 50% production

Estimated yearly sales revenue	$36,500.00
Less cost of production ($6.43 per ton)	11,734.70
Operating Profit (before principal, interest, taxes and insurance)	$24,765.30

APPENDIX

Basic Ice Plant Operation

When the plant is first put into production, care should be takento prevent the brine from becoming too cold, for when the brine temperature falls below design specifications, the ice produced will probably be cracked, and of an inferior grade. Also, when initial production is started, the entire tank must be frozen at the same time.

As the first freezing is nearing its completion, a schedule of pulling (removal of frozen ice) for a 24 hour period should be prepared. This is done by dividing the number of minutes in 24 hours by the number of pulls required. It is important that the tank pulling schedule be closely followed so as to hold brine temperatures at an even level.

Care should also be taken to allow time for the ice to temper before recently lifted cans are lowered into the dip tank. This tempering time is controlled by the brine temperature at which the ice was frozen. After the ice has been tempered, it should be lowered into the dip tank (which is normally kept at about 70° F.) and completely submerged until the ice floats free in the can. At this point, it can be lifted and transported to the storage room.

Other important operational considerations are:

1. Always keep the brine level at least equal to, or slightly above the finished ice level.

2. Never operate a freezing tank at a suction pressure that will produce a refrigerant temperature below the freezing point of the brine.

3. Maintain the brine in the freezing tank in proper chemical condition so as to retard corrosion in the tank and cans.

4. Blow the oil from the freezing tank coils at regular intervals.

5. To avoid excessive ice cracking:

   a. Temper the ice before placing it in the dip tank.
   b. Do not allow the water in the dip tank to get too hot or too cold.
   c. Hold the brine temperature as high and as even as the rate of pull will allow.
   d. Keep the ph of the water as close to 7.0 as possible.

6. Keep the ammonia system properly charged at all times.

Estimated Operator Maintenance Tools

Item Number	Number	Description
1	3	Common screwdriver, plastic or wooden handle, one each 4, 6 and 8 inches long.
2	3	Heavy duty, crescent type, adjustable, wrench, one each 6, 8 and 10 inches long with head opening up to 3/4, 1 and 1½ inch respectively.
3	2	Heavy duty adjustable pipe wrench 1 each 10 and 12 inches long.
4	1	Ball pean hammer, 1 pound
5	1	Combination slip joint pliers, 6 inches long.
6	1	Oil can, variable size and capacity.

Basic Safety Precautions

1. When servicing the equipment in an inclosed area where ammonia gas has escaped, wear an ammonia gas mask.

2. Always protect the eyes when servicing any part of the system which contains ammonia gas under pressure.

3. Take every precaution to avoid having any dirt, sand, moisture, or other foreign material enter the ammonia system.

4. Never charge any of the service drums above their rated capacity.

5. Do not use gasoline, kerosene, or other similar substance to clean any portion of the ammonia system.

6. Be sure that the water valves for coolants are open before starting operations.

7. Insure proper strength of the brine in the ice tank to avoid ice formation in the brine tank.

8. Never allow brine treated with dichromate to come in contact with the skin.

Informational Data

The following organizations have indicated an express interest in being contacted for further information concerning requirements and estimates for the construction and operation of ice plants of any size:

1. The York Corporation - York, Pennsylvania
2. The Frick Company - Waynesboro, Pennsylvania
3. The National Association of Ice Industries
   810 - 18th Street, N. W., Washington, D. C.

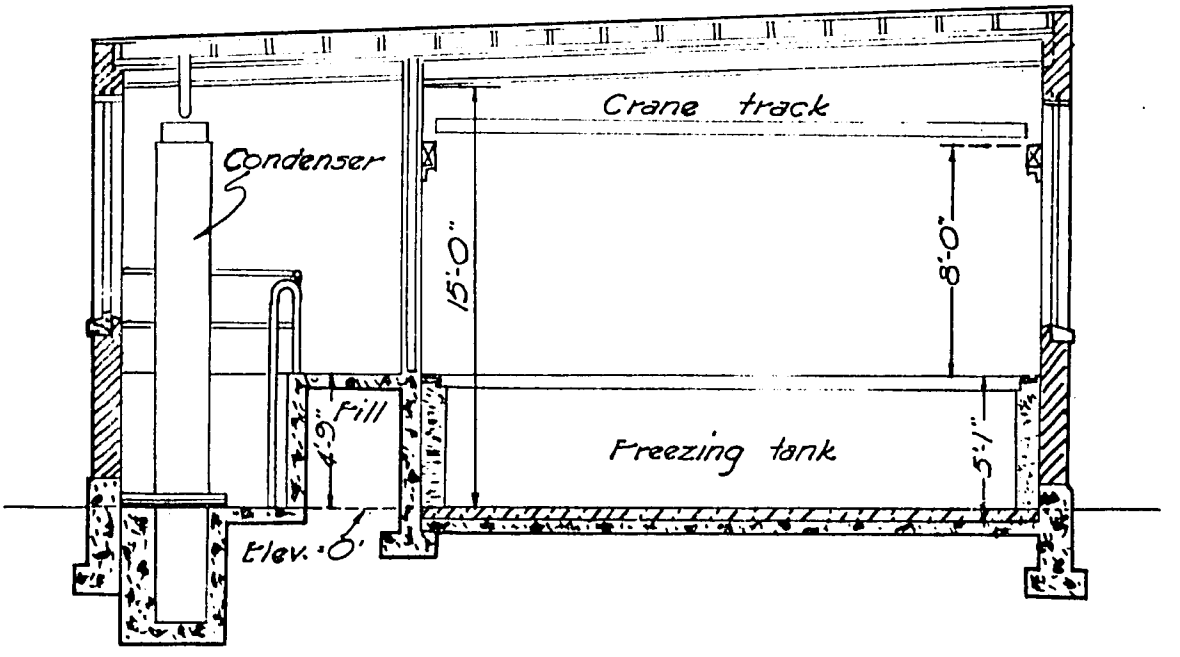

FIGURE 8. Arrangement of York Ammonia Condenser

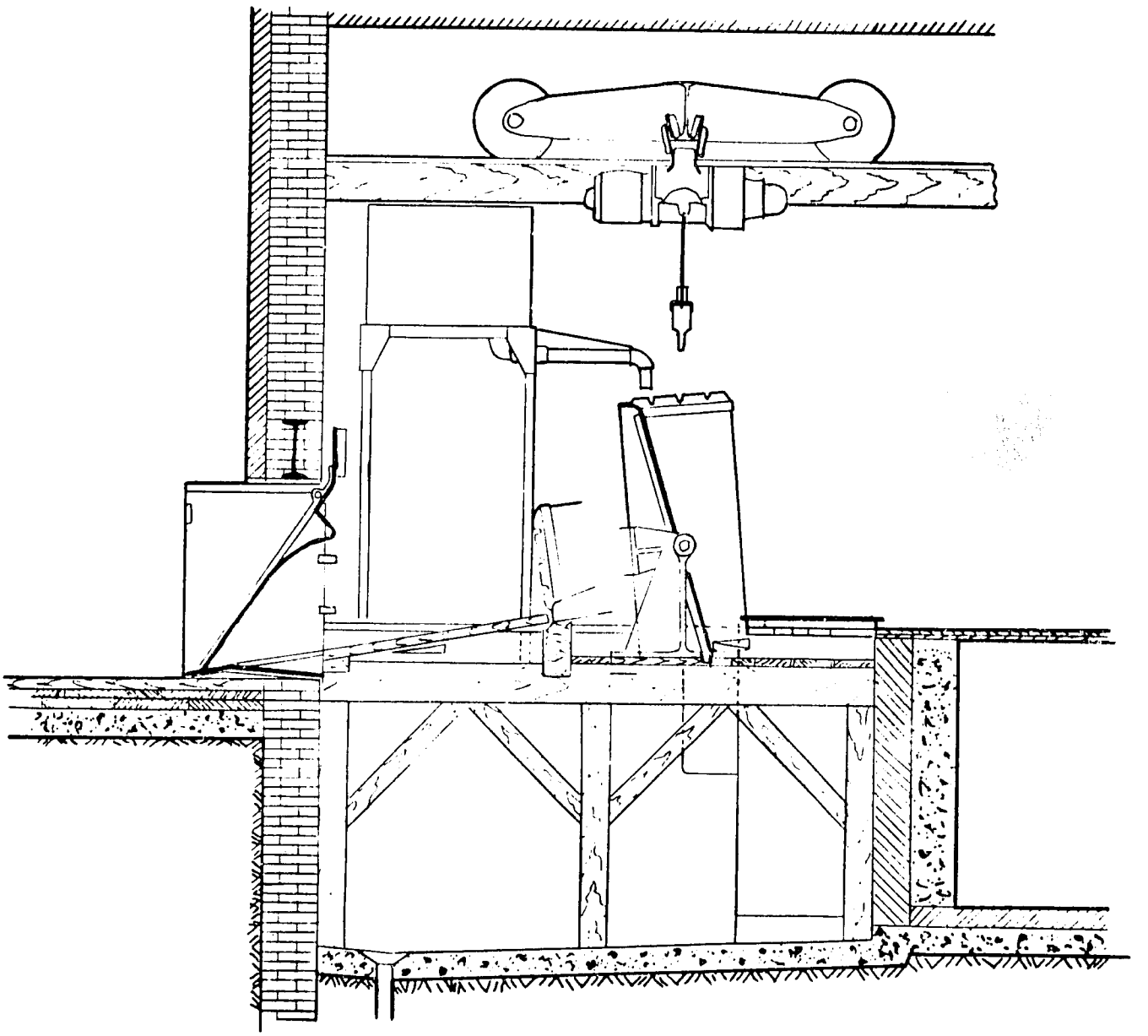

FIGURE 9. Arrangement of York Dumping Platform (with Trunnion Dump)

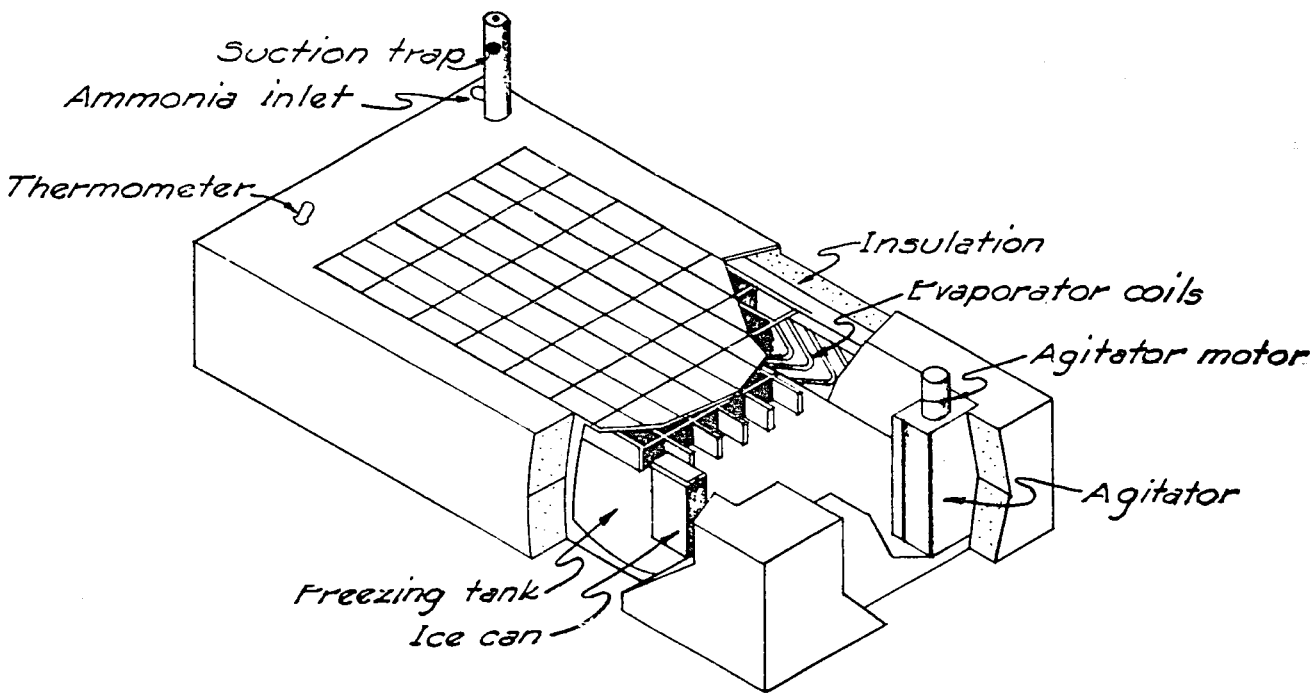

FIGURE 10. Cutaway view of a York Brine Tank Assembly

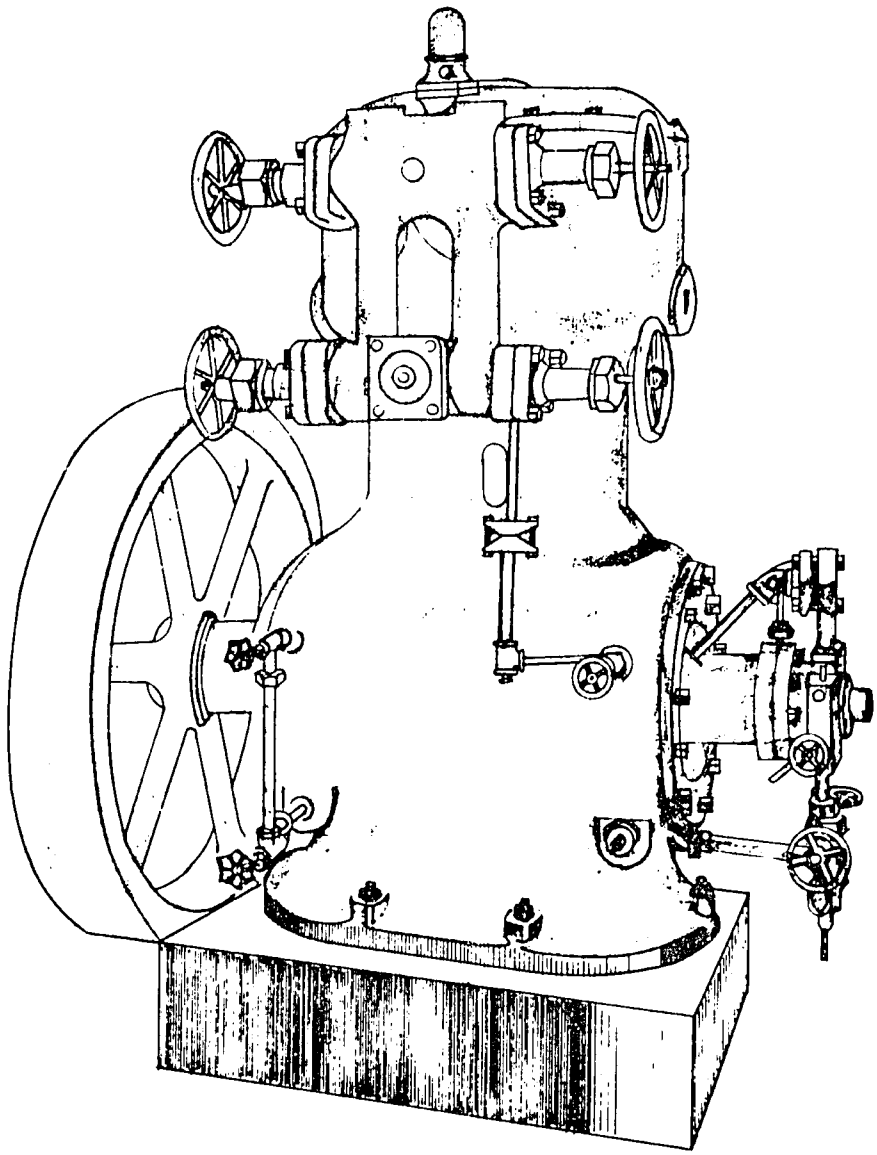

FIGURE 11. Enclosed type ammonia compressor

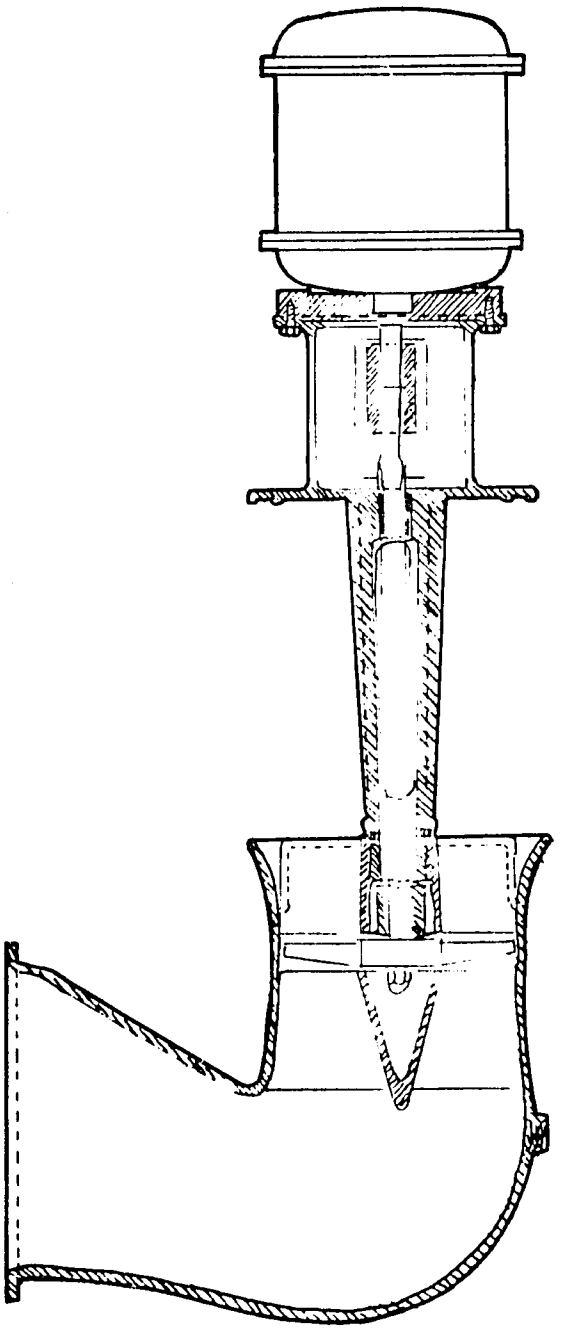

FIGURE-12. Cutaway view of a York Brine Agitator

SUMMARY

Although the figures used in compiling this report do not come from an operating 10-T ice plant, and are for the most part estimated figures being based on years of experience in the field of ice plant construction by two of the largest manufacturers of refrigeration equipment. In any event, it is felt that the estimates are accurate enough to draw the following conclusions:

1. It is advisable and profitable to establish an ice manufacturing plant.

2. The most economically sound plant to establish is a 10-ton plant with provisions for future expansion.

3. No labor problems in terms of number or experience of personnel should exist.

4. Further informational data on design, operation and cost is readily available.

5. In any situation where there is a potential market, the unit cost of production will be low enough to put the plant on an economically sound basis.