PN-ABH-143
ISN 70000

PHASE II REPORT

LIQUID ORAL REHYDRATION SOLUTION (ORS)

PACKAGED ASEPTICALLY IN TETRA PAKS

IN PAKISTAN

A Report Prepared By PRITECH Consultants:
NANCY LAIBLE
ROLF CAMPBELL

During The Period:
MAY 1990

TECHNOLOGIES FOR PRIMARY HEALTH CARE (PRITECH) PROJECT
Supported By The:
U.S. Agency For International Development
CONTRACT NO: AID/DPE-5969-Z-00-7064-00
PROJECT NO: 936-5969

AUTHORIZATION:
AID/S&T/HEA: 1/9/91
ASSGN. NO: SUP 091-PA

This research was possible because of the extraordinary efforts of the following businesses. Facilities, people, materials and information were openly offered in a spirit of cooperation and generosity unique to Pakistan:

Chaudry Dairy
Halla Milk
Milk Pak
Pakistan Dairies
Pre Pac Pakistan
Tetra Pac Pakistan

Liquid ORS
Phase II

Table of Contents

Background, Objective, Approach

Dairy Trials
- Pakistan Dairy
- Chaudry Dairy
- Milk Pak
- Halla Dairy

Quality Control

Process Operating Specifications

Conclusions

Recommendations

Appendix
1. Package Specification Drawings
2. Package Material Specifications
3. ORS Water Analyses
4. Test Procedures
5. WHO ORS Manual Table of Contents

LIQUID ORS PHASE II REPORT

Background

Phase II is a continuation of the liquid ORS project Phase I which was concluded with the report dated May 1990. Please refer to the Phase I report for liquid ORS background information.

Phase II has been the proving stage for liquid ORS in Tetra Paks. Based on information gained during Phase I, a modified Phase II project approach was proposed and accepted. Rather than use a U.S. pilot plant as a test facility for preliminary evaluations, it was proposed that four Pakistani dairies be used to directly confirm the process/package. This decision: 1) eliminated the U.S. staging step, 2) added three more trial dairies to the one initially proposed, and 3) added a second packaging type - the flexible pouch with pasteurized product - to the feasibility confirmation.

Objectives

1. Physically demonstrate the feasibility of packaging UHT processed liquid ORS into Tetra Paks using aseptic conditions.

   Confirm the packaging integrity and product stability after this processing.

   Document all process conditions, product ingredients, quality control procedures, packaging materials, and any other elements critical to liquid ORS manufacturing performance.

2. Test the feasibility of hot fill packaging pasteurized liquid ORS into pouches. Seek to demonstrate product safety and package integrity.

Approach

Trials were scheduled with four dairies in the Lahore area of Pakistan. These dairies were selected for three reasons: 1) they successfully operate Tetra Pak or Prepac systems to package dairy products, 2) they showed a willing interest to participate in the trial run of approximately 2K litres of liquid ORS, 3) they represented a realistic range of capabilities: 4 different style packages, 4 UHT product treatment processes, and 4 scales of operation (2 machines versus 12).

An additional overall advantage of conducting trials at four dairies rather than one is that test results are founded on a larger variety of process variables and therefore represent a less controllable real world proving ground.

The Trials

I. Pakistan Dairies ("Greens")
3rd Km. Multan Road
Sahiwal
Telex: 44604 UBSHL PK
Jahan Zaeb, Managing Director

Trial Date:	8/12/90
Machine:	Tetra Pak TBA10
Package:	250 ML Tetra Brik (specification drawing attached Appendix 1)
Material:	Juice Specification Foil Laminate Appendix 2
Machine Speed:	3,000 units/hour, 50/minute
ORS Water:	On-site well, analysis attached Appendix 3

Gms/Litre	Ors Ingredients	Source
1.5	Potassium Chloride	Extra pure lab reagent grade. Merck, Germany
2.9	Trisodium Citrate	25Kg bag, food grade. China
3.5	Sodium Chloride	99.1% pure food grade. Pakistan
20.0	Glucose Anhydrous	25Kg bag, food grade. Spain

System sanitation: Clean in place (CIP) 1) H_2O 15% caustic, 2) H_2O acid, 3) 85°C H_2O.

Processing Conditions
UHT steam injection sterilization temperature: set 140°C, graph reading = 141°C.

Sterile air pressure: 10 mbar sterilization, 13 mbar production.

Sterile air temperature: 118°C sterilization, 119°C production.

Control air heater temperature:	125°C at panel.
Product fill temperature:	42°C.
Product preheat:	75°C, after vacuum vessel = 76°C.
Pump pressure:	2.2-2.3 bar.
Homogenizer pressure:	0
Ambient temperature:	40°C, high humidity.
Test time:	start 1505 hours, finish 1550 hours.
Test product:	2,100 packages produced.

Production began using an unprinted Tetra Pak juice web produced for this experiment. It was discovered that the straw hole had been placed out of register with eye spot. This resulted in the straw hole being on an underflap and unusable. The web was exchanged for a current "Greens" apple juice web which performed well.

Package integrity was evaluated throughout the run by dissecting the package with a razor and confirming that fushion seals were achieved consistently, this was without exception, found to be the case at all 3 Tetra Pak dairies.

Out-take samples were pulled at beginning, middle and end of the run retained at plant.

Processing conditions were monitored throughout the run for consistency.

Product was sampled before and after running, for color and taste. A Brix test was performed to confirm ORS solution concentration. The theoretical anticipated value was 279 and the actual reading was 2.70. The test procedure is attached (Appendix 4).

Sample disposition: Pakistan dairies retained all sample product with the exception of three cases taken for Pritech/LOL use.

<u>Product & Package Analysis at Two Months</u> (Test procedures attached, Appendix 4)

Storage conditions:	Ambient, 25-35°C
pH:	8.2
Standard plate count:	3
Coliform:	<1
Yeast and mold:	<1/<1
Solution analysis color/clouding:	None
Sedimentation:	None
Flavor:	No change.
Package integrity:	Excellent. No signs of delamination or leakage.

<u>Conclusions</u>

1. Processing: This trial proved conclusively that UHT processing of a liquid ORS is feasible and produces a stable, intact, sterile solution.

2. Packaging: It was further demonstrated that the Tetra Pak TBA10 will dependably aseptically package liquid ORS and that the foil laminate juice web specification will contain the product.

II. Chaudhry Dairies Ltd. (Haleeb)
135 Ferozepur Road
Lahore
Telex: 44017 HALIB PK
Ing. J.J.H. Schaap, General Manager

Trial Date:	8/16/90
Machine:	Tetra Pak TBA10
Package:	1 litre Tetra Brik (specification drawing attached), Appendix 1
Material:	Milk Specification Foil Lamination, Appendix 2.
Machine speed:	41/minute
ORS water:	On-site well, analysis attached, Appendix 3.
ORS ingredients:	Premixed dry bulk ORS salts were ordered from ORS manufacturer and used by Chaudhry (trisodium citrate formula)
System sanitation:	Standard CIP procedure using caustic, acid and hot H_2O

Processing Conditions
UHT indirect tube heat exchanger sterilization at 140°C for an 8 second hold. The extended dwell time in tube was conducted was a result of the relatively small volume of fluid throughput.

ir pressure:	9 mbar sterilization, 13 mbar production
Sterile air temperature:	116°C
Control air heater temperature:	130°C
Product fill temperature:	25°C
Homogenizer pressure:	0
Ambient temperature:	35°C, humid
Test time:	0952 start, 1002 finish pack
Test product:	607, 1 litre

Two uncontrolled trial anomalies occurred. First the use of a premixed dry chemical ORS salt and second the unexpected requirement for the extended hold time, 8 seconds versus 3 seconds at 140°C. The hold time was a result of the scale of the run. It had the effect of transforming the glucose producing a dark amber ORS with a rather unpalatable taste. This would have been unsalable product. It was a useful trial result in that it underscores this critical process/product tolerance. The extended heat also lowered pH and standard plate results at two months as would be predicted.

Processing conditions were monitored throughout the run for consistency.

Sample disposition: Chaudhry Dairy retained all sample product with the exception of three cases taken for Pritech/Land O'Lakes use.

II. Chaudhry Dairies Ltd. (Haleeb) - continued

Product & Package Analysis at Two Months (Test procedures attached, Appendix 4)

Storage conditions:	Ambient, 25-35°C
pH:	6.75
Standard plate count:	<1
Coliform:	<1
Yeast and mold:	<1/<1
Solution analysis color/clouding:	Dark brown - no change from manufacturing.
Sedimentation:	None
Flavor:	Caramel
Package integrity:	Excellent

Conclusions

1. Processing: This trial served to reveal the heat sensitive nature of liquid ORS and establishes UHT hold time at 3-4 seconds, for conservation reasons. The exact threshold - 4-8 seconds - for solution transformation would have to be determined in another test.

2. Packaging: The milk foil laminate specification continues to contain product well at two months with no wicking or other penetration through the inner poly layer.

III. Milk Pak (Nestlè)
29th KM Lahore Sheikhupura Road
Sheikhupura - 39320 PK
Telex: 47237 MPL-PK
Ashfaq Ahmad, in charge of the Dairy and Juice Division

Trial Date:	8/15/90
Machine:	Tetra Classic TCA-150
Package:	200ml Tetrahedron Specification Drawing, Appendix 1.
Material:	Juice and milk specification foil laminates, Appendix 2.
Machine speed:	75 units/minute, 4,500 units/hour
ORS water:	On-site wells, analysis attached, Appendix 3.

Gms/Litre	Ors Ingredients	Source
1.5	Potassium Chloride	Extra pure lab reagent grade. Merck, Germany
2.9	Trisodium Citrate	Extra pure lab reagent grade. Merck, Germany
3.5	Sodium Chloride	Extra pure lab reagent grade. Merck, Germany
20.0	Glucose Anhydrous	Extra pure lab reagent grade. Merck, Germany

System sanitation: Standard CIP caustic, acid, hot H_2O.

III. Milk Pak (Nestlè) - continued

Processing Conditions
UHT steam infusion (No. 307 Danish Turnkey Dairies) 145°C steam pressure = 3.6 bar

Vacuum chamber temperature:	77°C
Tetra Pak sterilization temperature:	210°C
Tube heater temperature:	1.75 amperes
Hydraulic pressure:	8 bars
Compressed air temperature:	0.9 bar
Strip applicator element:	2.2 amps
Edge heater left:	4.4
Edge heater right:	3.2
Product fill temperature:	42°C
Filling pressure:	.8 bar
Ambient temperature:	28°C, humid
Test time:	1243 hours start, 1320 finish

This trial was unique in the use of the 200ml Tetrahedron shaped package "Tetra Classic". The Tetrahedron shape utilizes less packaging material to package the same volume of ORS than does the Tetra Brik shape. It is packed in plastic shipping crates very cleverly designed by Tetra Pak to allow the Tetrahedrons to nest into each other perfectly.

The Tetrahedrons have sharp corners that could abrade an abutting packaging and they do not stand upright as does a Tetra Brik. While they cost less to produce and to purchase, the Tetrahedron is reportedly far less popular with consumers than Tetra Briks.

Samples were retained at the plant. Three cases were taken to Pritech.

Product & Package Analysis at Two Months (Test procedures attached, Appendix 4)

Juice Specification Foil Laminate

pH:	8.27
Standard plate count:	63
Coliform:	<1
Yeast and mold:	<1/<1
Solution analysis color/clouding:	Yellow, brown, clear.
Sedimentation:	None
Flavor:	Good, no change.
Package integrity:	Excellent

Conclusions
The Milk Pak UHT process resulted in some minor glucose transformation indicated by darker color only, but no flavor changes. Both milk and juice foil laminate specifications were used which will reveal incompatibilities with the milk specification if present, after extended storage.

IV. Halla Dairies
Multan Road
Pattoki
Telephone: 667
S. Adnan Ahmad, Director
Mohammad Aslam Naz, Commercial Manager

Trial Date: 8/13/90
Machine: Prepac 3-M (hot fill, not aseptic) pouch machine.
Package: 250ml flexible pouch, Appendix 1.
Materials:
a) Milk web: .0045" coextrusion of (from outside in) low density polyethylene/white pigmented high density polyethylene/low density polyethylene = (sealant and product contact surface).

b) Hot fill oil web: coextrusion, .0035" (from outside in) high density polyethylene (35 microns)/high density polyethylene (30 microns)/ethylene acrylic acid (45 microns) = sealant and product contact surface.

Both materials supplied by:
Prepac Pakistan,
BC-9, Block 5,
Clifton, Karachi
Telex: 23961 Salam PK.
Attention: Rashid Sami Khan, Director

Machine speed: 2,400 pouches/hour, 40 pouches/minute.
ORS water: Calcium carbonate, magnesium carbonate, 300 PPM total, pH 7.51.
Source: On-site well.
Sodium: 26.5 PPM, manganese .015 PPM, iron .02 PPM, nitrates .12 PPM, chloride 4.2 PPM, sulfate 41. PPM.

Gms/Litre	Ors Ingredients	Source
1.5	Potassium Chloride	Pakistan bulk chemical market.
2.9	Trisodium Citrate	Pakistan bulk chemical market.
3.5	Sodium Chloride	Pakistan bulk chemical market.
20.0	Glucose Anhydrous	Pakistan bulk chemical market.

IV. Halla Dairies - continued

Some chemicals showed evidence of exposure to high humidity and foreign particles were discovered and sifted out. While the chemical source and quality may be questioned here, it serves to accentuate three important points for liquid ORS commercialization: 1) the specification and control of ingredients will need clear definition and enforcement, 2) at the same time quality standards may have to yield to what is commercially available and affordable, and 3) UHT or pasteurization processing eliminates the risk of microbiological contamination from ingredients. Implications for manufacturing of a pharmaceutical product in dairies are addressed below under QC Procedures.

System sanitation: CIP with caustic, acid, H_2O rinse.

Processing Conditions

Pasteurization was performed in a stainless steel, steam jacketed batch tank at 80-85°C. Hold time in the tank was from 3 minutes for product first out, to 20 minutes for product last out.

Fill temperature: 70-73°C

Prepac pouch former/filler: Seal conditions were set appropriately to effect a consistent hot wire bead seal and cut-off for the film in use. An important question going into the trial was how the machine sealing and pouch formation would respond to the unusually high fill temperature. It was shown to work effectively.

Ambient plant temperature: 40°C, high humidity.
Test time: Start packaging 1115 hours, end 1140 hours.
Test product retained: 900 pouches.

Production began using a non-hot fill milk packaging material that performed fairly well, but not without difficulty. An early change over was made to the hot fill material which proceeded to perform very well. Pouch seals were occasionally flawed, but this was due to easily correctable mechanical deviations and not indicative of any system-related chronic problems. The integrity of the pouch was excellent, even without cooling. Pouches were packed in plastic crates, 20 to a crate, and stored at either 4°C or ambient. The thermal inertia of the filled crates is substantial. A cool down at ambient would be expected to take 48 hours depending on storage conditions (air turbulence and temperature).

IV. Halla Dairies - continued

Product & Package Analysis at Two Months

Storage condition: Ambient, 25-35°C

	2 Months	2.5 Months
pH:	8.3	8.43
Standard plate count:	6	9.0 x 10 (4)
Coliform:	<1	<1
Yeast and mold:	<1/<1	<1/<1
Solution analysis color/clouding:	None	None
Sedimentation:	None	None
Flavor:	No change	No change
Pouch integrity:	Intact	Intact

Conclusions

The Prepac pouch presents an outstanding opportunity to deliver liquid ORS inexpensively (packaging material cost is less than 50% of a Tetra Pak).

Packaged as a pasteurized hot filled product it is estimated that several months shelf life at refrigerated temperatures is achievable. This would need confirmation.

Prepac also supplies an aseptic model pouch machine. Six are currently in operation in Pakistan, and could produce a safe, shelf stable liquid ORS. The pouched liquid ORS can be conveniently and cleanly consumed by piercing the pouch with a small straw. No leakage occurs and this milk and juice delivery concept has been proven in Europe and Canada.

It is our recommendation that the pouch concept be pursued in addition to the Tetra Pak. With the six aseptic and 30+ non-aseptic machines now operating in Pakistan, this form of ORS packaging will provide increased access to needed treatment at an affordable price.

Quality Control Procedures for Liquid ORS Manufacture

Correct chemicals and the substance concentration of liquid ORS are critical to efficacy and can have a life or death impact on an individual receiving oral rehydration therapy (ORT). The control of solution preparation is the responsibility of the manufacturer, and its accuracy must be guaranteed.

Solution sterility may also influence efficacy and have life or death consequences. It has been shown in the Phase I research that a typical liquid ORS will support the proliferation of microbes. Ultra high temperature (UHT) processing must be strictly controlled to prevent microbial contamination.

Package integrity throughout storage and distribution is essential to delivering a commercially sterile liquid ORS. While cosmetic package damage - abrasion, denting - can be tolerated, no breach in package barrier can be allowed. This depends on using a correct specification of film, and correct filling and sealing procedures. Asepsis during the filling operation must be strictly controlled.

The critical impact liquid ORS may have on patient survival places it in the same pharmaceutical category as the dry ORS with the same stringent controls for manufacture and distribution. Guidelines for these controls are well researched and outlined in the WHO Manual "Oral Rehydration Salts - Planning, Establishment and Operation of Production Facilities." Please refer to this report Appendix 5 for a copy of the table of contents. The WHO Manual was written for the manufacture of sachets of dry ORS. Incoming Q.C. for dry ingredients, general record keeping discipline, good manufacturing practices (GMP), and reconstituted solution analysis specified by the WHO have direct application to the manufacture of aseptic liquid ORS and requirements for quality control (QC). With these in mind, additional QC responsibilities for a liquid ORS pertain to UHT processing control, and aseptic packaging.

Fortunately, the UHT and aseptic packaging systems employed to produce liquid ORS are the same as those used for milk which is a significantly more challenging material to commercially sterilize and package than liquid ORS.

The sanitation and process control discipline as well as the background in microbiological product contamination prevention are well in place at these dairies. Liquid ORS manufacture has the following critical quality control points:

1. Ingredients incoming quality confirmation (WHO Handbook, pp. 18-37).

2. Packaging material specification (Tetra Pak Pakistan quality responsibility). Refer to Appendix 2 for results of QC tests performed on trial packaging materials. Test procedures are found in Appendix 4.

3. Ingredient formulation weights (Assumes use of an approved WHO formula). WHO handbook, pp. 61-63. These chemical ingredients shall be labeled and held in separate tightly closed plastic bags or drums.

4. Solution preparation using dry premix from #3 and pre-established quantity of H_2O. This will be done on a batch basis using 500-2K litre stainless steel tanks with agitation. After adding the dry ingredients, sufficient agitation time must be allowed for dissolution. Cold or heated water are satisfactory, with warmer preferred. The solution at this point should be sampled and analyzed by the lab for correct solids concentration using a Brix analysis (Appendix 4) or the more extensive tests cited or in the WHO manual, pp. 83-89.

5. UHT process conditions. Indirect tube heat exchange (maximum hold 4 seconds), steam injection or steam infusion may be employed using the same controls as those for other UHT products being produced in dairies: juice and milk . The bacteria load of the liquid ORS stream entering the UHT system will be very low, especially when compared to a raw milk. Conditions used above (sufficient to commercially sterilize raw milk) become very conservative UHT processing for liquid ORS and may even be an area for further experimentation to minimize thermal abuse and still obtain a safe product.

   Extended (4 second) high temperature (140°) hold times will transform the glucose and produce a brown unpalatable product, as described in this report.

6. Aseptic packaging. Again the controls to guarantee consistent quality are well in place and tested daily for the production of milk products at these dairies. No difference between milk and ORS in the effective formation of packages and seals was detected.

   One major challenge for liquid ORS is the detection of non-aseptic product. In the case of milk, a relatively short incubation for milk at elevated temperatures produces a detectable micro count and usually package bloat caused by gas forming bacteria (flavor and odor changes also occur). Liquid ORS, on the other hand, has very few micro organisms, and these would grow slowly under incubation. Most importantly, however, gas formation would be unlikely. Thus no external package evidence (bloat) - and possibly no odor or taste - would be present to reveal a contaminated liquid ORS in the field. For this reason it is essential that a very precisely monitored sampling, incubation and micro testing procedure be in place when producing aseptic liquid ORS.

We recommend a .2% sampling frequency or approximately every 10 minutes or 500 units initially. This would provide approximately 40 retained units for incubation and micro testing per shift before release. As confidence is gained in achieving asepsis the sampling frequency could be halved to .1%.

7. A last critical dimension in liquid ORS quality control is, to some extent, outside the bounds of manufacturer control. That dimension is the distribution and storage of finished product. The Tetra Pak package is a particularly strong container and resists reasonable distribution abuse satisfactorily.

National distribution throughout Pakistan can be punishing for a product. Road conditions, truck suspension systems, case floor stacking (instead of palletization) combine to provide a high risk environment for package stress and damage. A damaged - leaking - Tetra Brik is of course unsalable, though unlike milk, leaking ORS should not adulterate adjoining packages. The greater risk would come from non-obvious breaching of the Tetra Briks barrier in the form of small flex cracks or pinholes after repetitive shock and vibration and compression. The Tetra Brik is remarkably resistant to damage, but in extreme instances damage can and does occur in the field. Dairies currently experience product loss due to distribution damage reaching as high as 5% product replacement cost reported by one dairy.

It is imperative that the distribution and storage of liquid ORS be initially designed and monitored to minimize excessive abuse events. Test shipments should then precede commercial distribution to confirm adequate control of specific distribution channels.

As experience with a commercialized ORS is gained, less controlled distribution can be attempted. What we learned about Pakistan product distribution is that there are no specified limits or standards employed to transport or store product. Any attempt to model a system for prediction would be folly because handling events are so random.

Quality Control Summary

1. The WHO dry ORS manufacturing manual clearly specifies QC standards and procedures that are applicable to liquid ORS manufacturing. These will be used.

2. Microbiological outgrowth in aseptic liquid ORS during storage is a critical mode of product failure. Test procedures outlined in Appendix 4 (or comparable ones in use for current dairy products by the dairies) must be employed to confirm asepsis of manufacturing run out-take samples held in an incubation room. Insufficient research has been done to specify incubation hold times.

3. UHT processing controls are already operational at all dairies and apply to liquid ORS manufacture. These will be used for liquid ORS.

4. Batch preparation of liquid ORS solution is a critical hazard point. A sign-off record for two operators must be maintained. Confirmation Brix test in Appendix 4 will be performed at a minimum.

Conclusions

These trials have proven that liquid ORS can be dependably filled into Tetra Paks aseptically and contained for extended periods (2+ months to date).

Product from these trials will continue to be monitored for quality through twelve months by the dairies.

Assuming asepsis is achieved and done so without excessive heat exposure as pointed out, liquid ORS is a very stable solution that should remain safe and efficacious in a Tetra Pak for at least 12 months.

The shelf life of liquid ORS is defined by specific modes of product failure. They may be:

1. Organoleptic/sensory where the product remains safe and efficacious, but is unpalatable or a disagreeable color, or cloudy.

2. Microbial outgrowth resulting from improper processing and packaging. Gas and/or flavor changes may or may not occur, but a safety hazard is likely.

3. Package failure, leakers, internal delamination or product/package interactions which can be caused by many controllable and some uncontrollable factors.

Elevated storage temperatures such as the 40°C common to Pakistan can accelerate reactions within the product such as glucose transformation.

We must depend on the Pakistan dairies for their monitoring of ORS product quality over time, as they currently do for milk.

Seven elements contributing to overall liquid ORS shelf life are:

1. Water quality.
2. Dry ORS ingredient quality.
3. Processing conditions.
4. Packaging material quality.
5. Packaging machine conditions and operation.
6. Finished package integrity and quality.
7. Storage and distribution conditions.

Product stability and protection can be compromised by poor control in any of these areas, thereby affecting shelf life.

Based on the experience of these trials, we believe elements 1, 4, 5, and 6 to be well controlled and adequate for liquid ORS manufacturing at each dairy. Elements 2, 3, and 7 on the other hand are the areas requiring the largest change in protocol and would pose a major hazard to the success of liquid ORS if not controlled.

#2. Dry ORS ingredient quality (and solution preparation). The range of chemical quality obtained by the dairies for these trials ranged from lab reagent grade to open bulk bags with moisture damage. The latter was not done out of carelessness. These were ingredients common for use in the food industry and apparently seemed appropriate to use for another injestable: ORS.

Ingredient quality standards (as defined by the WHO) must be clearly specified, sources identified, and compliance enforced for liquid ORS commercialization.

#3 Processing conditions are expertly controllable at the dairies once set point targets and tolerances are prescribed. The hazard of extended hold times at elevated temperatures must be emphasized. Conditions recommended in this report do work. Glucose transformation can be controlled. An understanding of the nature of this hazard coupled with lab analysis (or on line product evaluation) will assure a quality product.

#7 This has been fully covered under quality control item 7.

Process Operating Specification for Tetra Pak - Conclusions

Specifications will vary from plant to plant because different UHT systems, Tetra Pak machines, and instrumentation is used. This is illustrated by the data shown for each of the different trials which provide the basis for future runs.

Directionally, the most important finding, that confirms previous Tetra Pak data, pertains to the potentially destabilizing influence of heat on liquid ORS. Glucose is the most vulnerable constituent (assuming the sodium citrate WHO formula is employed). A heat and dwell threshold was exceeded at Chaudhry when processing conditions in the heat exchanger tube reached 140°C for 8 seconds. This resulted in glucose isomerization and polymerization revealed by darker color and a overcooked caramelized flavor. The scale of this experimental run did not permit experimentation to isolate the transition threshold: somewhere between 4 and 8 seconds. For the present sterilization conditions are specified as:

Temperature:	140°C +2 -0
Dwell:	3 seconds +1 -0

(Typical *Clostridium botulinum* kill conditions.)

A second critical element pertains to ORS salt and glucose concentration. There is a risk during steam injection or infusion that water will be added or removed as vapor during sterilization and vacuum condensation. If this occurred, resulting salt and glucose concentrations may be inappropriate in the liquid product. The product stream temperature must be balanced at a recommended temperature of: 75°C +/- 4°C during preheat and after vacuum vessel.

APPENDIX 1

PACKAGING SPECIFICATION DRAWINGS

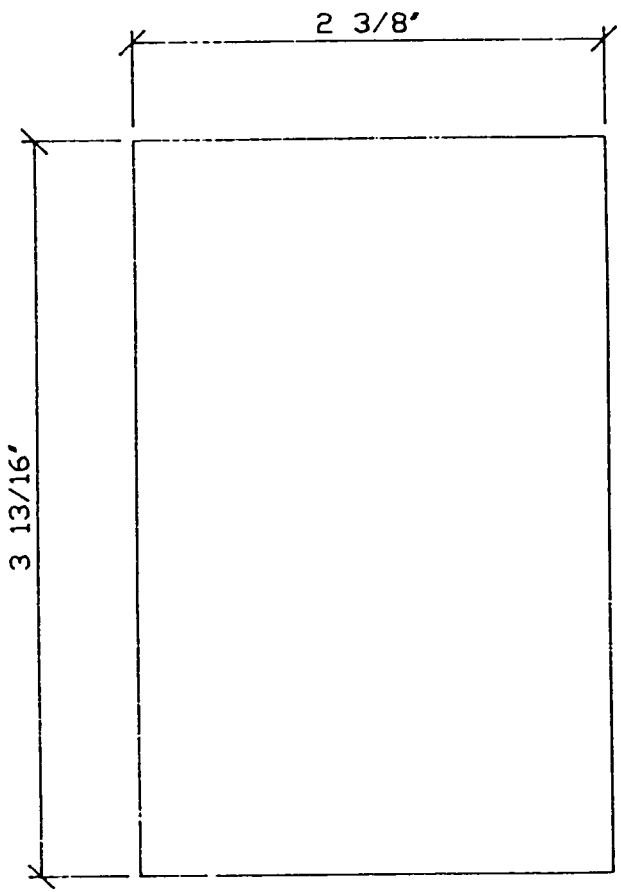

FRONT VIEW

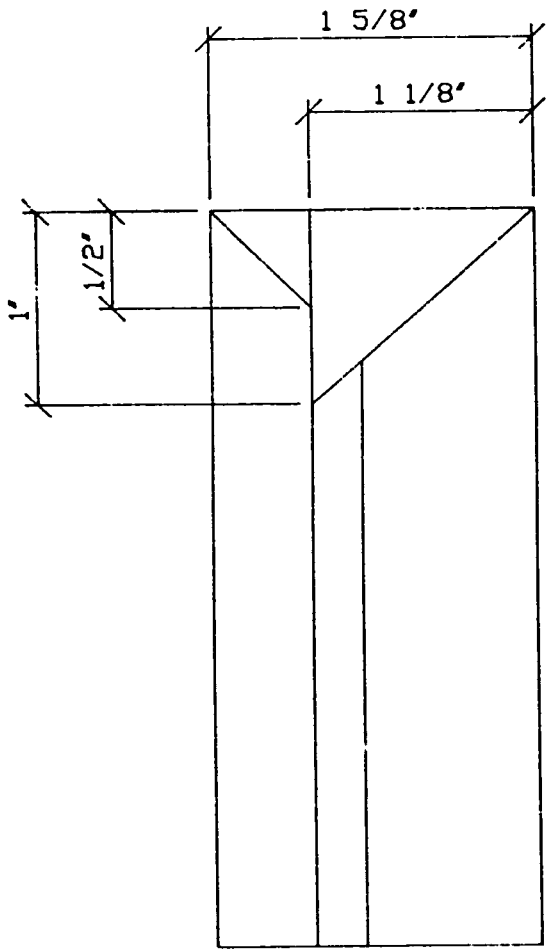

SIDE VIEW

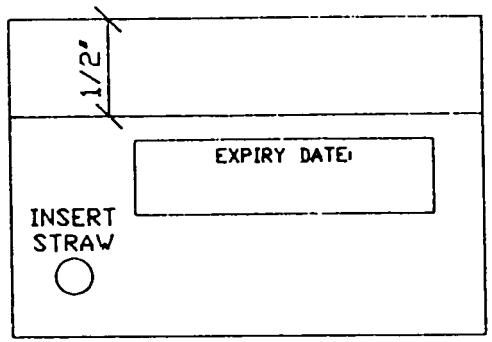

TOP VIEW

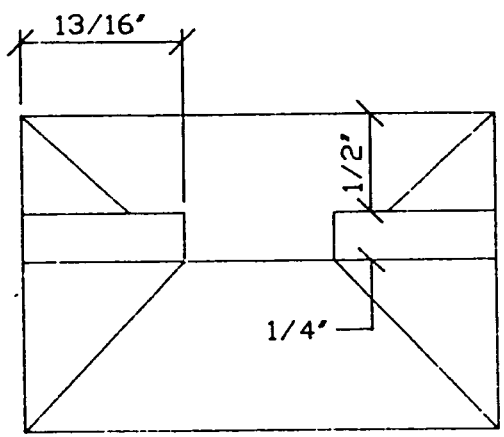

BOTTOM VIEW

PAKISTAN DAIRIES

SCALE: 1"=1"	AutoCAD DRAWING FILENAME TB-1	DRAWN BY: Frank K.
DATE: 10/18/90		SHEET ____ OF ____

DRAWING TITLE

250ml TETRA BRICK

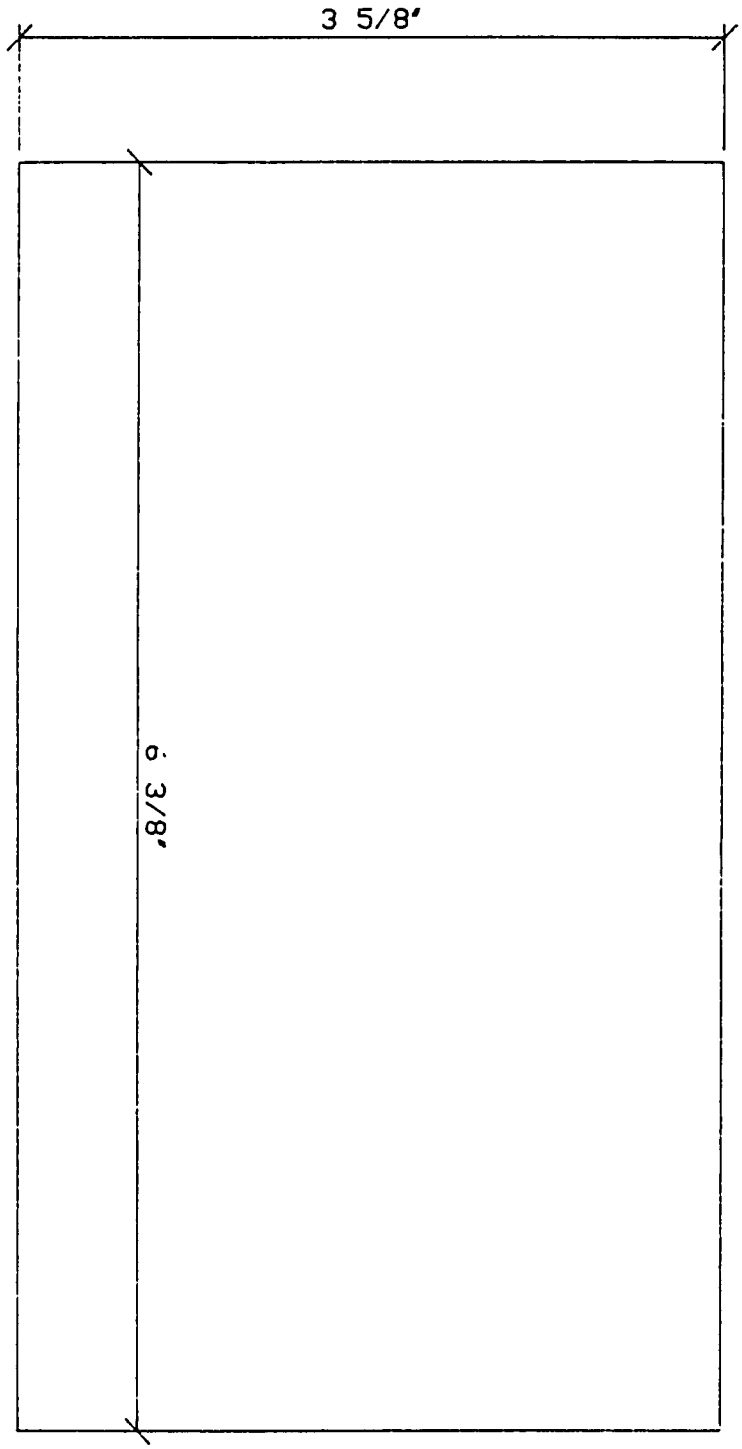

FRONT VIEW

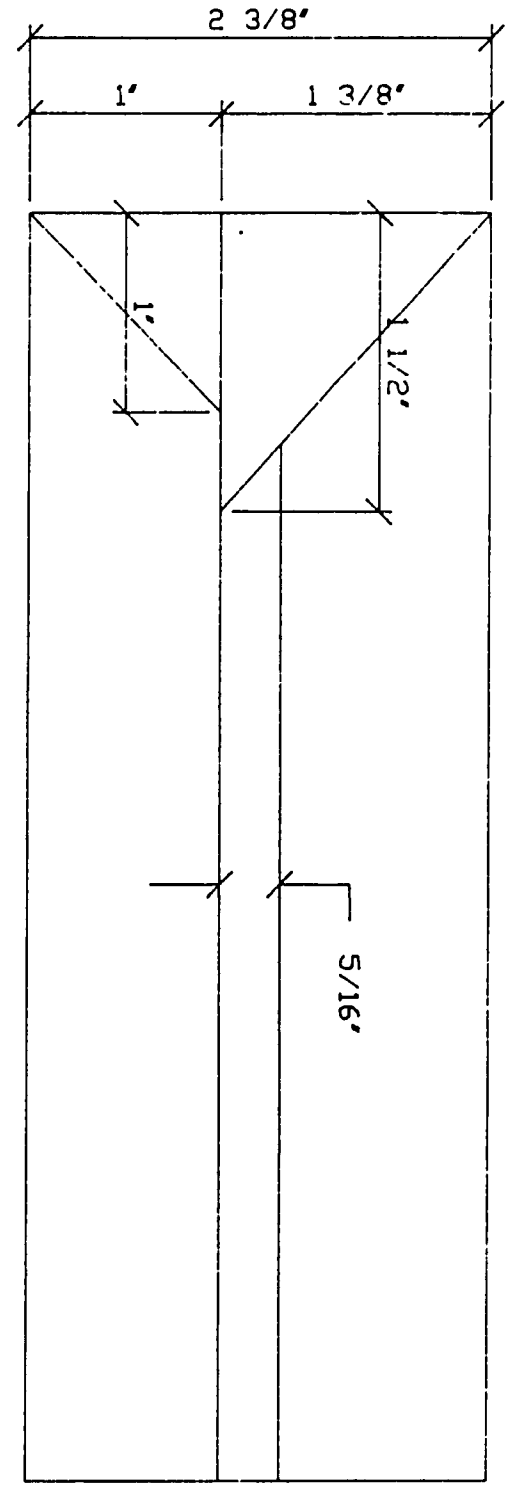

SIDE VIEW

SCALE: 1"=1"	CHAUDHRY DAIRIES	AutoCAD DRAWING FILENAME: TB-2
DATE: 10/19/90		
DRAWN BY: Frank K.	DRAWING TITLE: 1 LITER TETRA BRICK	DRAWING NUMBER
SHEET ____ OF ____		

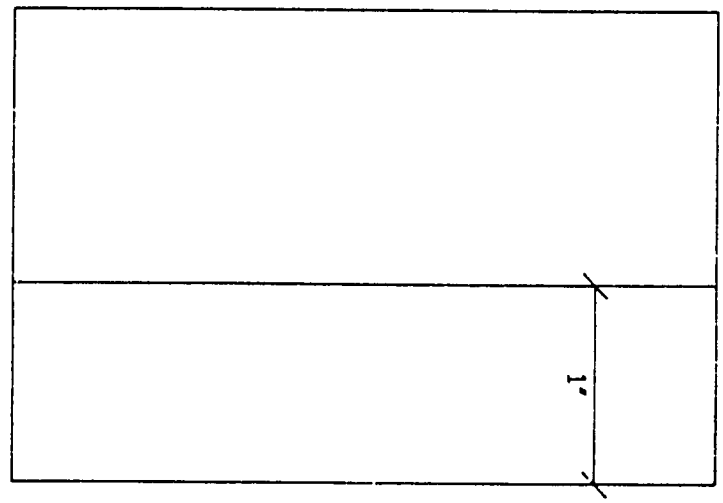

TOP VIEW

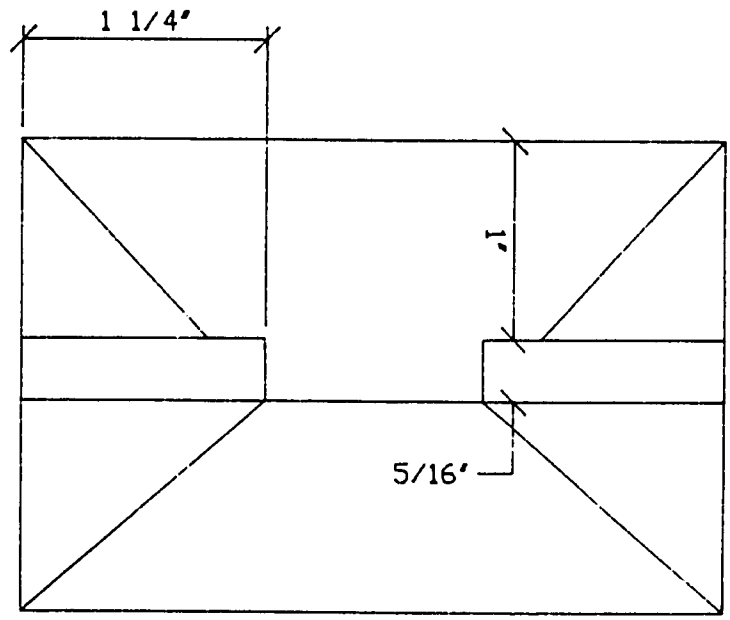

BOTTOM VIEW

SCALE: 1"=1"	CHAUDHRY DAIRIES	AutoCAD DRAWING FILENAME TB-3
DATE: 10/19/90		
DRAWN BY: Frank K.	DRAWING TITLE 1 LITER TETRA BRICK	DRAWING NUMBER
SHEET ___ OF ___		

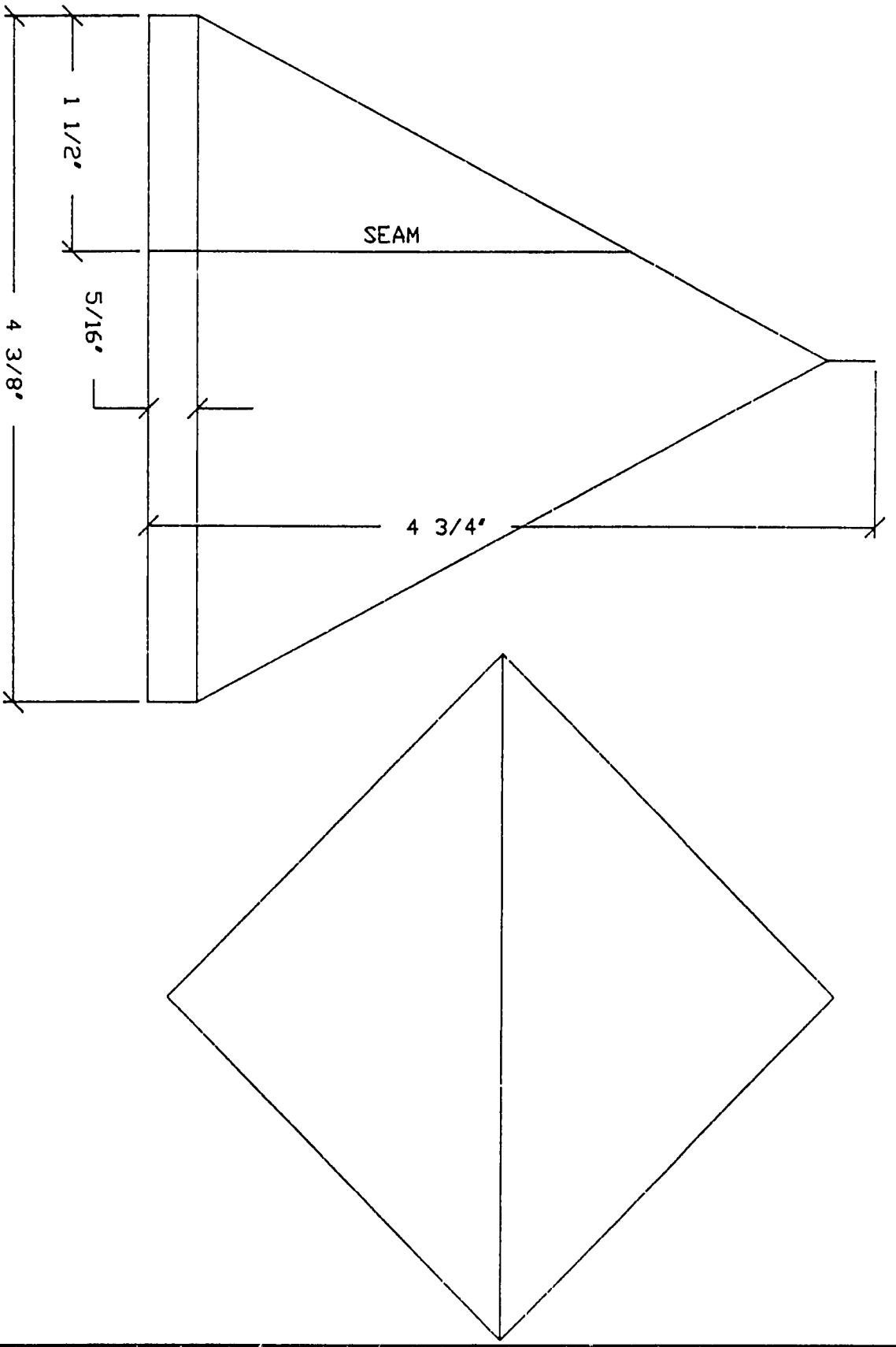

SCALE: 1"=1"	MILK PAC DAIRIES	AutoCAD DRAWING FILENAME TC-1
DATE: 10/19/90		
DRAWN BY: Frank K.	DRAWING TITLE 200ml TETRA CLASSIC	DRAWING NUMBER
SHEET ___ OF ___		

APPENDIX 2

PACKAGING MATERIAL SPECIFICATIONS

TETRA PAK - JUICE
TETRA PAK - MILK

ANALYSIS OF PACKAGING MATERIALS USED IN TRIALS
UNUSED ROLLSTOCK TESTED

Sample	A	B	C	D	E	F
Caliper (mils)	11.8	7.9	8.8	8.2	10.4	9.7
Stiffness (units)						
Machine Direction	125	43.5	57.5	47.5	71	76.5
Cross Direction	75	24.3	38.3	23.7	40.5	37.5
Basis Weight (lbs/ream)	204	138	172	145	180	171

Sample:

A = Haleeb Milk Specification - 1 litre
B = New Milk Pac (milk specification) 200 ml Tetra Classic
C = New Milk Pac (juice specification) 200 ml Tetra Classic
D = Old Milk Pac (juice specification) 200 ml Tetra Classic (not used)
E = Greens Unprinted 250 ml
F = Greens Juice

Above results reflect averages. Caliper and stiffness N=5, Basis weight N=4. There were no extremes to report. Raw data available upon request.

TETRA PAK LAMINATE SPECIFICATION - JUICE

Machine Model TBA 10	250 ML	500 ML	1000 ML
a. Polyethylene Outside Layer	12 +\- 2 MC	12 +\- 2 MC	12 +\- 2 MC
b. Paperboard	185 GSM +\- 15 GSM (.305 MM)	235 GSM +\- 15 GSM (.380 MM)	235 GSM +\- 15 GSM (.380 MM)
c. Laminating TIE Layer Polyethylene	25 +\- 2 MC	25 +\- 2 MC	25 +\- 2 MC
d. Foil	6.65 +\- .05	6.65 +\- .05	6.65 +\- .05
e. Ionomer Layer			
f. Polyethylene Inside Layer	45 +\- 2 MC	45 +\- 2 MC	45 +\- 2 MC
Width	289 +\- 1 MM	305 +\- 1 MM	473 +\- 1 MM

GSM = Grams/Square Meter
MC = Microns
MM = Millimeters
ML = Milliliters

CRITICAL PERFORMANCE (Product identity and conditions of use)

The above laminate structure is intended to contain a liquid Oral Rehydration Solution (ORS) for a period of six months at 40°C. The solution pH is 8, the solution formula is:

Percentage	ORS - citrate	Grams/litre
12.55	Sodium chloride	3.5
10.39	Trisodium citrate, dihydrate	2.9
5.38	Potassium chloride	1.5
71.68	Glucose, anhydrous	20.0
100.00	Total	27.9

The above solution will be heat treated for sterility, cooled and filled aseptically.

Acidification of this formula to <4.6 will also be compatible with this packaging material.

Discontinuities or "pinholes" in the inner polyethylene laminate layer (E) are critical defects and will cause product/package failure.

The control and responsibility for laminate quality resides with the sole supplier.

Function of Tetra Pak Laminate Layers (See attached drawing)

a. Outside polyethylene surface: protection of paperboard from moisture, abrasion. Protection of printing ink. Machining properties of slip and flexibility.

b. Base paperboard: provides a carrier for barrier laminates, structure and strength, scoring and folding base to form a carton shape.

c. Polyethylene tie layer: bonds aluminum foil to paper base web.

d. Aluminum foil: gas, moisture and odor barrier, functions to facilitate induction heat sealing method used.

e. Ionomer: EAA or "surlyn" foil primer coat or layer prevents penetrant product molecules from reaching foil. Especially required for acidic fluids.

f. Polyethylene inside surface: protects aluminum foil from product and prevents flex cracking, adds flexibility to overall structure, functions to create a fusion heat seal when heated during induction sealing serves as inert, safe product contact surface.

TETRA PAK LAMINATION LAYERS

FOR JUICE PACKAGING

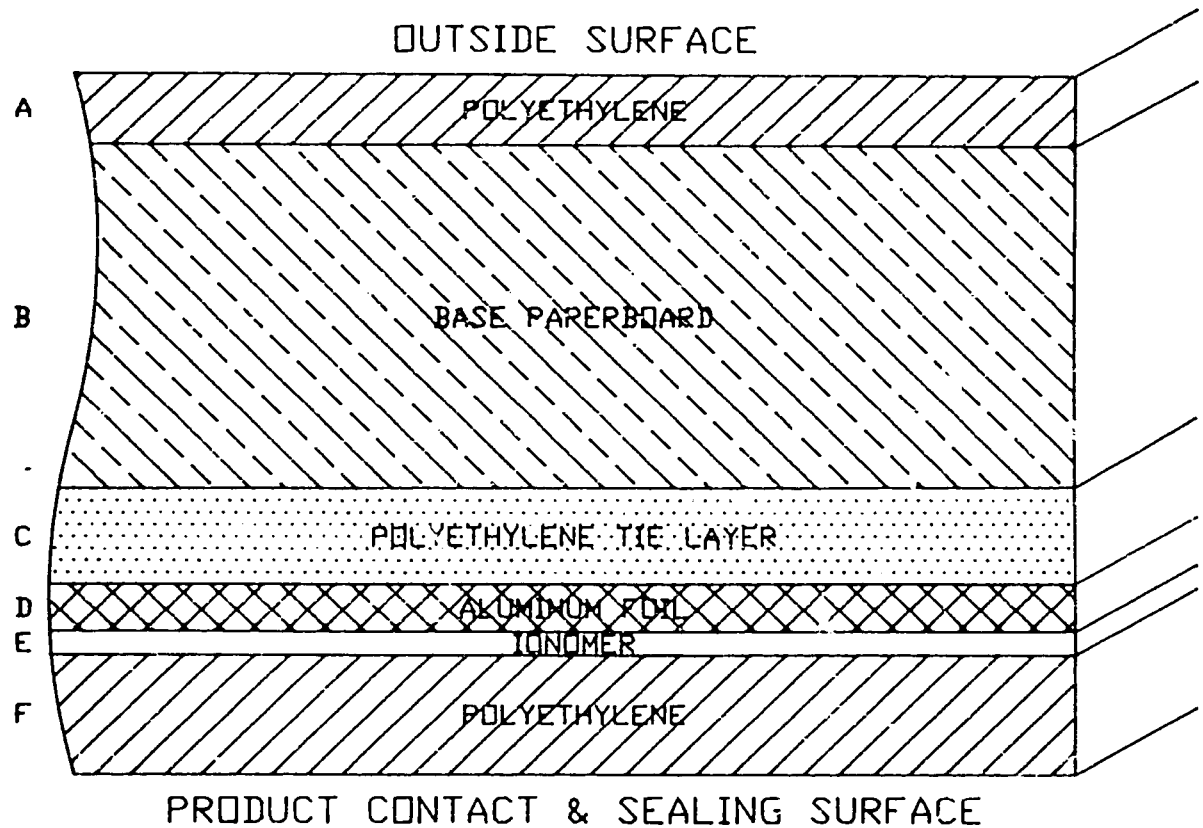

AutoCAD DRAWING FILENAME	TPAK-2
DRAWING NUMBER	
	LAND O' LAKES, INC.
DRAWING TITLE	TETRA PAK LAMINATION LAYERS-JUICE
SCALE:	NONE
DATE:	5/30/90
DRAWN BY:	Frank K.
SHEET	

MILK

TETRA PAK LAMINATE SPECIFICATION

Machine Model TBA 10	250 ML	500 ML	1000 ML
a. Polyethylene Outside Layer	12 +\- 2 MC	12 +\- 2 MC	12 +\- 2 MC
b. Paperboard	185 GSM +\- 15 GSM (.305 MM)	235 GSM +\- 15 GSM (.380 MM)	235 GSM +\- 15 GSM (.380 MM)
c. Laminating TIE Layer Polyethylene	25 +\- 2 MC	25 +\- 2 MC	25 +\- 2 MC
d. Foil	6.65 +\- .05	6.65 +\- .05	6.65 +\- .05
e. Polyethylene Inside Layer	45 +\- 2 MC	45 +\- 2 MC	45 +\- 2 MC
Width	289 +\- 1 MM	305 +\- 1 MM	473 +\- 1 MM

GSM = Grams/Square Meter
MC = Microns
MM = Millimeters
ML = Millileters

CRITICAL PERFORMANCE (Product identity and conditions of use)

The above laminate structure is intended to contain a liquid Oral Rehydration Solution (ORS) for a period of six months at 40°C. The solution pH is 8, the solution formula is:

Percentage	ORS - citrate	Grams/litre
12.55	Sodium chloride	3.5
10.39	Trisodium citrate, dihydrate	2.9
5.38	Potassium chloride	1.5
71.68	Glucose, anhydrous	20.0
100.00	Total	27.9

The above solution will be heat treated for sterility, cooled and filled aseptically.

(continued)

16

Discontinuities or "pinholes" in the inner polyethylene laminate layer (E) are critical defects and will cause product/packge failure.

The control and responsibility for laminate quality resides with the sole supplier.

Function of Tetra Pak Laminate Layers (See attached drawing)

a. Outside polyethylene surface: protection of paperboard from moisture, abrasion. Protection of printing ink. Machining properties of slip and flexibility.

b. Base paperboard: provides a carrier for barrier laminates, structure and strength, scoring and folding base to form a carton shape.

c. Polyethylene tie layer: bonds aluminum foil to paper base web.

d. Aluminum foil: gas, moisture and odor barrier, functions to facilitate induction heat sealing method used.

e. Polyethylene inside surface: protects aluminum foil from product and prevents flex cracking, adds flexibility to overall structure, functions to create a fusion heat seal when heated during induction sealing, serves as inert, safe product contact surface.

MILK

TETRA PAK LAMINATION LAYERS

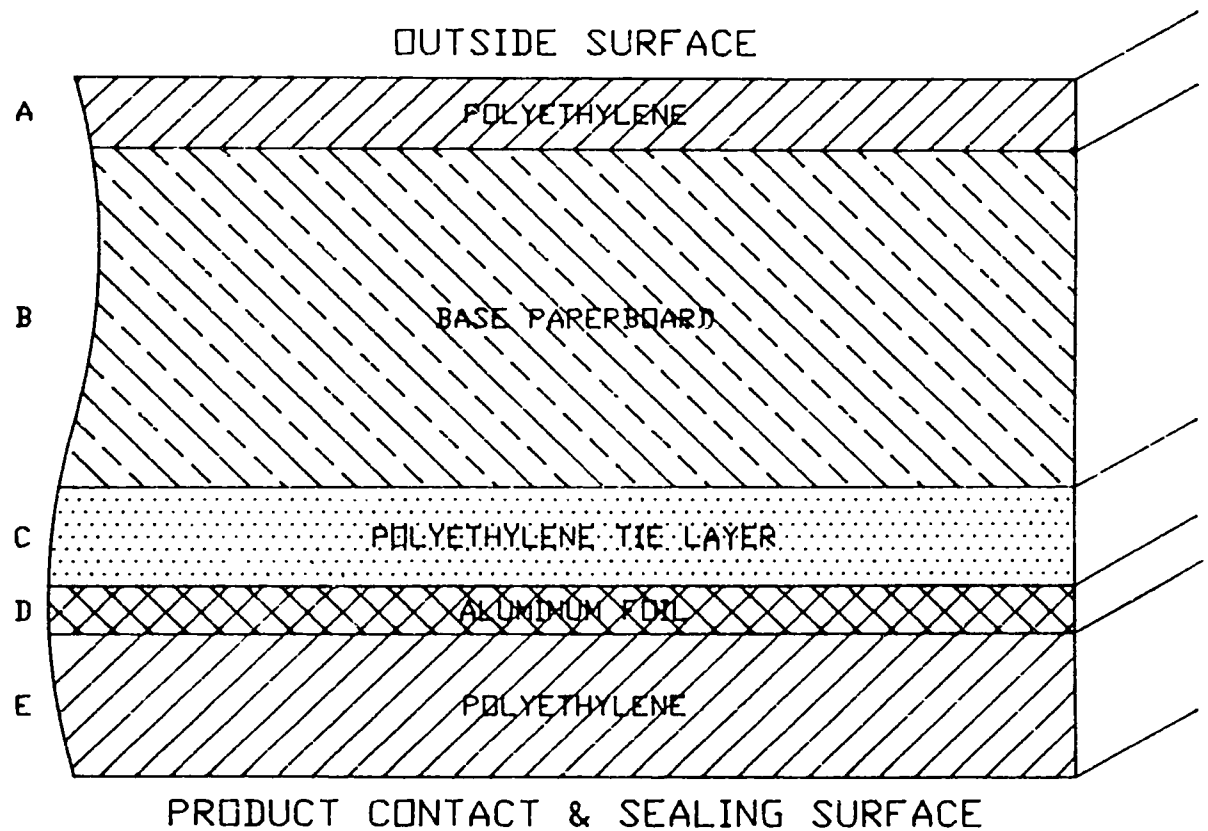

AutoCAD DRAWING FILENAME	TPAK-1
DRAWING NUMBER	
LAND O' LAKES, INC.	
DRAWING TITLE	TETRA PAK LAMINATION LAYERS
SCALE:	NONE
DATE:	5/30/90
DRAWN BY:	Jerrold K.
SHEET	___ OF ___

APPENDIX 3

ORS DAIRY WATER ANALYSES

PAKISTAN DAIRY

RESULTS OF ANLYSIS EXPRESSED IN MILLIGRAMS PER LITRE

	W.H.O. Internationa drinking water standards (Max allowable concentration mg/litre)	Analysis of Samples	Analysis of Samples	Remarks
Electrical Conductivity		1250		
Total Solids	1500	900		
Colour	50 Units	Clear		
Turbidity	25 Units	-do-		
Taste	Unobjectionable	Unobjectionable		
Odour	Unobjectionable	-do-		
Iron (Fe	1.0			
Manganese (Mn)	0.5			
Calcium (Ca)	200	56		
Magnesium (Mg)	150	26		
Sulphate SO 4)	400	115		
Chloride (Cl)	600	96		
PH.	6.5 to 9.25	8.1		
Total Hardness (as CaCo3) Industrial use only		284		
Nitrates No. 3	45	-		
Fluoride	1.5	-		
Toxic substances		-		
Other Ammonia (NH3) tests	0.5	-		
Carbonate (Na2CO 3)		Absent.		
Bicarbonate (NaHCO 3)		265		
Sediments & Suspensions/Nitrite		Absent.		

Opinion:—Fit for drinking. from chemical point of view.

FRIESLAND CHAUDHRY

CC FRIESLAND . COOPERATIVE COMPANY

Corporate Quality Assurance Department

Specifications Raw Materials **Date effective: 01-01-88**

BRON WATER
PAKISTAN JUNI 9

Water for Recombined Milkproducts

Colour		max. 5 units - Pt-Co scale	
Odour		unobjectable	
Taste		unobjectable	
Turbidity		5 units (turbidity units)	
Total solids		max. 500 mg/l	345
pH range		7.0 - 8.5	8,0
Anionic detergents		max. 0.2 mg/l	
Mineral oil		max. 0.01 mg/l	
Phenolic compounds		max. 0.001 mg/l	
Total hardness	(as CaCo3)	max. 100 mg/l	85
Calcium	(as Ca)	max. 75 mg/l	46
Magnesium	(as Mg)	± 30-150 mg/l	24
		Depending on sulphate content. Not more than 30 mg/l if there is 250 mg/l SO_4. More Mg acceptable at lower SO_4.	
Copper	(as Cu)	max. 0.05 mg/l	<0,01
Iron	(as Fe)	max. 0.1 mg/l	<0,01
Manganese	(as Mn)	max. 0.05 mg/l	<0,01
Zinc	(as Zn)	max. 5.0 mg/l	<0,01
Chloride	(as Cl)	max. 100 mg/l	43
Sulfate	(as SO_4)	max. 200 mg/l	95
Nitrate	(as NO_3)	max. 20 mg/l	3,8
E.coli in 100 ml		absent	
Coliform organisms in 100 ml		absent	

Limits for toxic substances in drinking water

Substance		Upper limit	
Arsenic	(as As)	0.05	mg/l
Cadmium	(as Cd)	0.01	mg/l
Cyanide	(as CN)	0.05	mg/l
Lead	(as Pb)	0.1	mg/l
Mercury	(as Hg)	0.001	mg/l
Selenium	(as Se)	0.01	mg/l

Signature:

.....

(P. Boersma, Manager C.Q.A.D.)

MILKPAK LTD.
SHEIKHUPURA

DAILY JUICE WATER ANALYSIS

DATE: 28.2.9[illegible]
WEDNESDAY

SOFT WATER STORAGE TANK SAMPLE

FREQUENCY DISTRIBUTION

TESTING	STANDARDS	UNITS	0800	1000	1200	1400	1600	1800	2000	2200	2400	0200	0400	0600
TASTE	NONE		O.K.	O.K NONE	NONE	NONE	NONE	O.K	O.K	NONE	NONE	NONE	NONE	NONE
COLOUR	20 MAX	PPM	COLOUR LESS	COLOUR LESS	COLOUR LESS	COLOUR LESS	COLOUR LESS	COLOUR LESS	COLOUR LESS	COLOUR LESS	COLOUR LESS	COLOUR LESS	COLOUR LESS	COLOUR LESS
pH	> 8.3	UNIT	9.25	9.27	9.10	-	9.0	9.0	8.9	8.4	8.7	9.0	8.9	9.0
P.ALKALINITY	< 3.2	MVA/LIT	3.0	3.1	3.0	3.0	2.9	2.7	2.5	2.3	2.5	2.7	2.7	2.9
M.O.ALKALINITY	≤5.2[50-120] PPM	MVA/LIT OR in PPM	72	75	64	60	58	52	54	52	60	64	72	74
CHOLORIDE	< 50	PPM	38	40	42	40	38	40	36	40	42	36	48	48
TOTAL HARDNESS	3-4 D H	D H OR PPM	1.5 D.H.	2.2	2.1	1.75	-	2.0	2.0	1.95	2.0	2.15	2.1	2.1
Fe	< 1.0	PPM	-	-	-	-	-	-	-	-	-	-	-	-
SO_4	< 100	PPM	-	-	-	-	-	-	-	-	-	-	-	-
CHLORINE	< 0.1 OR NIL	PPM	NIL	NIL	NIL	NIL	NIL	NIL	NIL	NIL	NIL	NIL	NIL	NIL

COMMENTS:

TESTED BY: SHIFT A SHIFT B SHIFT C

VISA I/C

C.C. I/C D&J DIVISION
O.A.

APPENDIX 4

TEST PROCEDURES

APPENDIX 4

Oral Rehydration Solution
Methods of Analysis

I. <u>pH Determination</u>:

1. pH meter should be allowed to warm up one-half hour before use.

2. Using fresh buffer solutions at pH 4.0 and 7.0, calibrate the pH meter to these pH readings.

3. Return meter to standby position and rinse electrode with distilled water.

4. Allow sample to warm to room temperature.

5. Place the electrode in sample and stir with meter in reading position.

6. Record the pH value after electrode has been in contact with sample for a minimum of 45 seconds or until reading stabilizes.

II. <u>Standard Plate Count</u>:

1. The method is an estimate of the number of viable microorganisms in a liquid sample as detected by the medium employed and the time and temperature of incubation.

2. Maintain a clean sanitized work area by washing counter tops with a sanitizer. Allow to air dry.

3. Prepare plate count agar by autoclaving and temper to 44-46°C.

4. Shake sample to be tested 25 times in 7 seconds through a 12 inch arc to ensure a representative sample is tested.

5. Immediately after mixing, withdraw 1.1 ml of well mixed sample and deposit 0.1 ml into one petri plate. Deposit 1.0 ml into another plate.

6. Withdraw 1.0 ml sample and aseptically transfer it to 99 ml of sterile phosphate buffer.

7. Shake bottle 25 times through a 12 inch arc in 7 seconds.

8. Prepare further decimal dilutions of sample by transferring 1.0 ml from previous dilution into 99 ml sterile buffer. Shake all bottles before making any further transfers.

9. Transfer 1.0 ml or decimal dilution thereof to sterile petri plate.

10. Remove top from tempered agar container and flame the lip of the container. Promptly pour 12-15 ml of agar into each petri plate. Mix by rotating agar plate in both clockwise and counterclockwise directions.

11. Allow plate contents to solidify on a level surface.

12. Incubate plates for 48 ± 3 hours at 32°C.

13. Count colonies on plate containing 25 to 250 colonies and calculate number of colonies in original sample by multiplying colonies counted by the dilution of sample which that plate represents.

III. <u>Coliform</u>:

1. The method enumerates coliform bacteria; those aerobic and facultatively anaerobic, gram negative non-spore forming rods able to ferment lactose with production of acid and gas within 48 hours at 32°C.

2. Prepare violet red bile agar (VRBA) by autoclaving and tempering to 44-46°C.

3. Maintain a clean work area by washing counter tops with a sanitizer. Allow to air dry.

4. Shake sample to be tested 25 times in 7 seconds through a 12 inch arc to ensure a representative sample is tested.

5. Immediately after mixing, withdraw 1.1 ml of well mixed sample and deposit 0.1 ml into one petri plate. Deposit 1.0 ml into another plate.

6. Withdraw 1.0 ml sample and aseptically transfer it to 99 ml of sterile phosphate buffer.

7. Shake bottle 25 times through a 12 inch arc in 7 seconds.

8. Prepare further decimal dilutions of sample by transferring 1.0 ml from previous dilution into 99 ml sterile buffer. Shake all bottles before making any further transfers.

9. Transfer 1.0 ml or decimal dilution thereof to sterile petri plate.

10. Remove top from tempered agar container and flame the lip of the container. Promptly pour 12-15 ml of agar into each petri plate. Mix by rotating agar plate in both clockwise and counterclockwise directions.

11. Allow plate contents to solidify on a level surface.

12. Add an additional 3-4 ml of VRBA as an overlay and allow to solidify.

13. Incubate plates for 24 ± 2 hours at 32°C.

14. Coliform colonies appear as dark red, subsurface colonies at least 0.5 mm in diameter on uncrowded plates.

15. Count colonies on plate containing 25 to 250 colonies and calculate number of colonies in original sample by multiplying colonies counted by the dilution of sample which that plate represents.

IV. <u>Yeast and Mold</u>:

1. Yeasts and molds (fungi) are enumerated by a pour plate method using acidified potato dextrose agar. Bacteria are inhibited from growing due to the low pH of the media.

2. Prepare potato dextrose agar by autoclaving and tempering to 44-46°C.

3. Maintain a clean work area by washing counter tops with a sanitizer. Allow to air dry.

4. Shake sample to be tested 25 times in 7 seconds through a 12 inch arc to ensure a representative sample is tested.

5. Immediately after mixing, withdraw 1.1 ml of well mixed sample and deposit 0.1 ml into one petri plate. Deposit 1.0 ml into another plate.

6. Withdraw 1.0 ml sample and aseptically transfer it to 99 ml of sterile phosphate buffer.

7. Shake bottle 25 times through a 12 inch arc in 7 seconds.

8. Prepare further decimal dilutions of sample by transferring 1.0 ml from previous dilution into 99 ml sterile buffer. Shake all bottles before making any further transfers.

9. Transfer 1.0 ml or decimal dilution thereof to sterile petri plate.

10. Pipet the required amount of 10% tartaric acid to the tempered potato dextrose agar which will result in solidified medium at a pH of 3.5 ± 0.1 pH units. Cap bottle tightly and mix agar and acid by gentle rotation.

11. Pour 15-20 ml of acidified agar into petri plates containing sample or dilutions of sample. Add agar within 1-2 minutes of adding sample or sample may adhere to plate.

12. Mix sample and agar by rotating several times, first in one direction and them in the opposite direction. Allow agar to solidify on a level surface.

13. Incubate plates in the dark at room temperature (22-25°C). Do not stack plates higher than three and do not invert. Do not disturb until time of counting at 5 days.

14. Count plates containing 10-150 colonies and record colony forming units per ml of sample by multiplying number counted by the dilution of sample which that plate represents.

Brix Test

Summary
A refractometer with a mode selection which will display degrees Brix is used to determine the total solids (percent sucrose) in liquid ORS.

Equipment and Reagents

Refractometer:	Anacon Model MDR-7, AO ABBE Model 10450/10460 or equivalent.
Water Bath:	Range 15°C to 50°C with variance not more than ± 0.1°C. Set to regulate the temperature at 20 ± 0.1°C.
Ethyl Alcohol:	95%, C_2H_5 OH - U.S.P.
Nytex Sample Carrier	
Water:	Milli-Q

Test Procedure
Clean the face of the prism using ethanol and lens tissue, only. CAUTION: In wiping the prism, use only gentle stroking and be sure that the wiper contains no abrasives which could scratch the surface.

Allow the solvent to evaporate, do not wipe the surfaces dry. With the aid of a water bath and tubing, connect and circulate water at 20 ± 0.1°C through the refractometer.

Use Method I to measure degrees Brix using the AO ABBE refractometer and Method II to measure degrees Brix using the Anacon refractometer.

Method I:

Change the Mode selector to "BRIX". Place a few drops of sample on loading (lower) prism; close refractometer. When the sample in the refractometer has stabilized at a temperature of 20 ± 0.1°C (see Discussion), set the scale at the approximate value expected. To see the scale depress the momentary contact switch on the left side of the instrument, look through the eye-piece and adjust the coarse or fine hand controls on the right side of the instrument.

Observe the crosshairs, sharply focusing them with the eye-piece if necessary, and bring the dividing line upon their intersection by means of the coarse or fine hand controls. Read the degrees Brix by depressing the "read" button. Remove the sample and clean the prism (see Discussion). Place a single sheet of lens paper over the prism face and close the prism assembly.

Method II:

Change the Mode selector to position 5 located at the rear of the instrument. thoroughly wet a Nytex sample carrier with sample so the strip is in complete contact with the prism surface. Check the temperature by depressing and holding the ACKNOWLEDGE switch. Momentarily depress the ACKNOWLEDGE switch. A reading will be displayed following a short "SCAN" message. Record the value. Once the measurement is made, remove the sample and clean the prism (see Discussion). Place a single sheet of lens paper over the prism face and close the prism assembly.

Return Mode selector to position 0.

Calculation

Record degrees Brix to the nearest 0.1 unit. Degrees Brix is directly correlated to total solids (i.e., percent sucrose) of the liquid ORS.

Discussion

Immediately after each use thoroughly clean and dry prisms; with the aid of ethyl alcohol and lens or facial tissues, remove all of sample. Allow solvent to evaporate, do not wipe surfaces dry. NOTE: If sample is soluble in water, clean first with water; complete cleaning with alcohol as described above. Never use glass or metal applicators against the prism face.

At least 20 minutes is required for the prisms to stabilize at the 20°C temperature of the circulating water.

NOTE: A hand held refractometer may be used for less precise on the spot measurements during processing.

Equipment - Test Procedure

1. Place sample on prism to completely cover it.

2. close refractometer.

3. Hold refractometer up to a bright light source.

4. Observe scale for a sharp line of contrast between the grey shaded area and the white area.

5. Read the percent Brix off the scale at the line of contrast.

6. Multiply by detection factor, if any.

NOTE: Different refractometers cover different ranges of percent Brix. Use the refractometer whose range contains the expected value of the sample.

If no line of contrast is observed, the sample has been diluted too far or is in need of further dilution.

PACKAGE TESTING PROCEDURE
FOR DETERMINING PAPERBOARD STIFFNESS

Name: Taber Stiffness Test

I. Description:

A destructive test procedure for determining the stiffness of paperboard in both the machine and cross direction.

II. Apparatus:

Taber stiffness tester and specimen shears.

III. Setting up machine:

A. Plug in.
B. Align arrow on pendulum with zero mark on driving disk. Move driving disk by pushing operating switch to the fat righ/let as necessary.
C. Level the machine by adjusting from two legs, aligning "0" mark on stationary disk to "0" on driving disk.
D. Tip on rear leg must remain tightened.

E. Clamp jaws are centered by turning clamp screws.

IV. Collect sample:

A. Use speciment cutter (will cut up to .020" thick).
   1. Place straight edge as far as it will go into opened shear.
   2. With sharp blow on handle specimen will be cut.
   3. Lift handle completely back and specimen can be removed.
B. Mark grain on sample.
C. Cut five to ten samples for each way of grain testing. The stiffness in one direction, i.e., machine, will be different than the other direction, i.e., cross.

V. Procedure:

Results are based on an average of 5-10 samples. Differences do arise from variations in material.

Condition samples to environment for 24 hours prior to testing.

A. Center top of specimen between clamp jaws (near center of disks):
   1. Center according to graduations on back of clamp.
   2. Tighten jaws by turning screws on sides of clamps.
   3. Position so that lower edge of speciment rests lightly on bottom gage.
   4. Back edge of speciment is parallel with face of pendulum when tightening clamp screws.

B. Center test speciment between rollers (lower disk area):
   1. Move left hand roller toward strip until it makes contact, but does not deflect test strip. This should <u>not</u> deflect pendulum.
   2. Move right roller to light contact position.
   3. On the right hand roller knob there is a marked line. Back off/adjustment 1/4 turn.

C. Initial Stiffness--move control lever right or left to align oblique line on pendulum with 15° mark on driving disk. Read stiffness units off stationary disks. Do same in other direction.

   1. <u>For 0 - 10 test range</u> (films, paper)
      Mount 10 unit compensator
      weight on stud near top of pendulum.
      Deflect material 15° left - record reading
      Deflect material 15° right - record reading
      (<u>Average reading</u>) = x stiffness units
      (10 (unit compensator))
   2. <u>For 10-100 range</u> (paper board, heavy papers)
      Deflect 15° left - record reading
      Deflect 15° right - record reading
      Average of reading = x stiffness units
   3. Measurement units
      a. Units are in stiffness units
         The machine will measure 10-100 units as set up.
         To measure larger than 100 stiffness units, 3 weights are available. Use of the weights will involve a calculation.
         (1) Read the units off the machine.
         (2) Multiply by corresponding factor for each weight.
         (3) Weights are placed on stud below roller clamps.

<u>factor</u>	<u>weight</u>
5x	500 unit
10x	1000 units
20x	2000 units

41

4. Other calculations:

a. Basic stiffness is obtained by aligning the opaque line on the pendulum with the 15° line on the driving disc, maintaining the deflection for one minute then realigning again. Read off stationary disk.

b. Resilence is the elastic or spring like quality of materials and may be expressed as:

$$\text{Resilence } \% = \frac{\text{Basic Stiffness X 100}}{\text{Initial Stiffness}}$$

c. Thick materials that would buckle at the clamp jaws at 15° deflection are tested at 7.5°.

Multiply the scale indication by 100 to approximate the relationship made to the 15° angle.

LAND O'LAKES

PACKAGE TESTING PROCEDURE FOR DETERMINING WEIGHT/DENSITY OF SHEET MATERIAL

Name: Basis Weight of Flexible Packaging (Paper, Plastic) Materials and Board Stock (Folding Cartons/Corrugated)

I. Description

A destructive test used to determine the weight of material. A means of characterizing materials.

II. Apparatus

Scissors, ruler, g-scale, pencil/pen

III. Procedure

A. Draw a one-inch square mark on the sample. Cut out sample following marked line precisely.

B. Zero g-scale, measure the one-inch square sample. Record the result.

C. Weigh three to five squares from sample in question. Average the weights, x.

D. Calculate as follows:

1. For board/corrugated samples:

a. $\frac{X\ g}{1\ in.^2} \times \frac{144\ in.^2}{1\ ft.^2} = A\ g/ft.^2$

b. A x 1,000 sq. ft./ream = B g/ream

c. B x 1 lb/454 g = C lbs./ream = basis weight
C is the number referenced on the specification.

2. For paper, foil or plastic samples:

a. $\frac{X\ g}{1\ in.^2} \times \frac{144\ in.^2}{1\ ft.^2} = D\ g/ft.^2$

b. D x 3,000 sq. ft./ream = E g/ream

c. E x 1 lb./454g = F lbs./ream = basis weight

E is the number referenced on the specification.

E. Compare the value calculated with the specified value. If outside tolerance, increase the number of samples tested. If more than 50% of the samples are outside the tolerance specified, reject order and notify Quality Control and Corporate Purchasing. Save samples rejected. If less than 50% are outside tolerance, attempt to machine material. If problems occur in machining, reject order as above.

LAND O'LAKES

PACKAGE TESTING PROCEDURE FOR DETERMINING THE THICKNESS OF A MATERIAL

Name: Caliper; used for flexible packaging materials and paper board stock (folding cartons)

I. Description

Non-destructive test used to verify the thickness or caliper of a material.

II. Apparatus

Micrometer. Measure in mils. A mil = 1/1000 of an inch. i.e., 14 mils or points equals .014 inch.

III. Procedure

A. Place a single thickness of the sample between the jaws of the micrometer. Tighten the jaws according to the micrometer's operating manual.

B. Read the dial. Convert the reading into inch equivalents.

C. Repeat the test three to five times over different areas of the sample. Average the values obtained.

D. Compare reading to the specified value. If outside tolerance, increase the number of samples tested. If more than 50% of the samples are outside the tolerance specified, reject the order and notify Quality Control and Corporate Purchasing. If less than 50% of samples are outside tolerance, attempt to machine material. If problems occur in machining, reject order as above. Save samples from testing.

APPENDIX 5

WHO ORS MFG MANUAL TABLE OF CONTENTS

CONTENTS

Page

DEFINITIONS 3

1. INTRODUCTION 4

2. ORAL REHYDRATION THERAPY AND ORAL REHYDRATION SALTS (ORS) 5

2.1 Practical application 5

2.2 Composition of oral rehydration salts 5

3. PLANNING THE PROVISION AND PRODUCTION OF ORAL REHYDRATION SALTS 8

3.1 National policies and priority health problems 8

3.2 Estimating the demand 8

3.3 National standard dose 8

3.4 Presentation 12

3.5 Options for provision 14

3.6 Approaches to national production 16

3.7 Price of ORS and evaluation of costs 17

4. RAW MATERIALS 18

4.1 Glucose 18

4.2 Sodium chloride 24

4.3 Potassium chloride 28

4.4 Sodium citrate 32

4.5 Sodium hydrogen carbonate 37

4.6 Packaging material 41

5. PRODUCTION PREMISES 46

5.1 General 46

5.2 Storage facilities 48

5.3 Handling and transportation of goods 51

5.4 Storage space requirements 51

5.5 Production rooms 53

5.6 Staff facilities 53

5.7 Air treatment 53

41

Page

6. PERSONNEL 58

7. MANUFACTURING PROCEDURE 61

7.1 Identity test 61

7.2 Drying 61

7.3 Grating/sifting/sieving 62

7.4 Weighing 62

7.5 Mixing 63

7.6 Dosing/filling/sealing 64

7.7 Packing/labelling 70

7.8 Quarantine 71

8. PRODUCTION EQUIPMENT 72

9. QUALITY CONTROL OF FINISHED PRODUCT 83

9.1 Physical properties 83

9.2 Chemical composition/identification (Basic tests) 84

9.3 Chemical composition (Assay) 85

9.4 List of reagents 90

9.5 Preparation of test solutions (TS) and volumetric solutions (VS) 94

9.6 Equipment and instruments for quality control 100

ANNEX 1: ESTIMATING THE DEMAND FOR ORS 109

ANNEX 2: CHECKLIST FOR ASSESSING THE FEASIBILITY OF LOCAL PRODUCTION OF ORS 110

ANNEX 3: CALCULATING REQUIREMENTS OF PACKAGING MATERIALS 114

ANNEX 4: CALCULATING REQUIREMENTS OF RAW MATERIALS 115

ANNEX 5: PROCEDURE FOR EVALUATING THE COST OF LOCALLY PRODUCED ORS 116

ANNEX 6: SUPPLIERS OF RAW MATERIALS 119

ANNEX 7: GOOD PRACTICES IN THE MANUFACTURE AND QUALITY CONTROL OF DRUGS 125

ANNEX 8: SPECIFICATIONS FOR TIMBER PALLET 131

ANNEX 9: SPECIFICATIONS FOR BALANCE TABLE 132

ANNEX 10: PRODUCTION CONTROL SHEET 133

ANNEX 11: QUALITY CONTROL SHEET 134

GLOSSARY OF TERMS USED IN THE DOCUMENT 135