Final Report

DESIGN AND IMPLEMENTATION STRATEGIES FOR AN URBAN SECTOR PERFORMANCE MONITORING AND EVALUATION SYSTEM (PMES)

Planning and Development Collaborative International

August - September 1990

ISN 68941

Final Report

DESIGN AND IMPLEMENTATION STRATEGIES FOR AN URBAN SECTOR PERFORMANCE MONITORING AND EVALUATION SYSTEM (PMES)

Prepared for:
USAID/Jakarta
Economic Policy Support Office

Prepared by:
PADCO, Inc.
1012 N Street, NW
Washington, DC 20001

CONTRACT NUMBER: PDC-1008-I-9069-00
DELIVERY ORDER: 13
AID PROJECT NUMBER: 497-0365

August - September 1990

TABLE OF CONTENTS

LIST OF ACRONYMS

ACKNOWLEDGEMENTS

SECTION 1 - INTRODUCTION 1

SECTION 2 - MONITORING FRAMEWORK 5
- A. The Focus for Monitoring 5
- B. Performance Monitoring and Evaluation Indicators 7
- C. Sources of Data: GOI Agencies 10
- D. Levels/Limits for Local Government Data Analysis 11
- E. Approaches to Monitoring 11
- F. Frequency of Monitoring & Reporting 11

SECTION 3 - PERFORMANCE MONITORING AND EVALUATION INDICATORS
- A. Monitoring Indicators 13
  - 1. National Aid 14
  - 2. Local Resource Mobilization 16
  - 3. Private Sector Participation 19
  - 4. Service Delivery 21
  - 5. Access to Affordable Shelter 23
- B. Evaluation Indicators 25
  - 1. National Aid 25
  - 2. Local Resource Mobilization 26
  - 3. Private Sector Participation 26
  - 4. Service Delivery 27
  - 5. Access to Affordable Shelter 27

SECTION 4 - BASELINE DATA 29

SECTION 5 - MANAGEMENT RECOMMENDATIONS 41
- A. Information Management 43
- B. Institutional Management 47

SECTION 6 - NEXT STEPS 49

ANNEX 1 - USAID/Indonesia Program Performance Contract 53

ANNEX 2 - Baseline Data Spreadsheets 57

ANNEX 3 - Data Collection and Consolidation 69

LIST OF EXHIBITS AND FIGURES

Exhibit 1 12

Figure 1: Baseline Data Summary: Indonesia (Total) 31

Figure 2: Level I (Provincial): Baseline Finance Data (Billion Rupiah) 32

Figure 3: Level II (Kotamadya/Kabupaten): Baseline Finance Data (Billion Rupiah) 33

Figure 4: Baseline Data Summary: Indonesia (Total) 34

Figure 5: Performance Monitoring Baseline Data Set for Key Indicators: National Aid 35

Figure 6: Performance Monitoring Baseline Data Set for Key Indicators: Local Resource Mobilization 36

Figure 7: Performance Monitoring Baseline Data Set for Key Indicators: Private Sector Participation 37

Figure 8: Performance Monitoring Baseline Data Set for Key Indicators: Service Delivery 38

Figure 9: Performance Monitoring Baseline Data Set for Key Indicators: Shelter 39

Figure 10: The Framework for Urban Finance and Service Delivery Monitoring 42

Figure 11: Monitoring System Implementation Stage I 44

Figure 12: Monitoring System Implementation Stage II 45

Figure 13: Annual Performance Tracking Report 51

LIST OF ACRONYMS

BAPPEDAs	Local Planning Boards
BAPPENAS	National Development Planning Agency
BKPM	National Investment Coordination Agency
BPS	Central Bureau of Statistics
BTN	Bank Tenggara Nasional
BUMDs	Local Public Enterprises
CDSS	Country Development Strategy Statement
EPSO	Economic Policy Support Office (USAID)
GOI	Government of Indonesia
HGL	Housing Guaranty Loan
IBRD	International Bank for Reconstruction and Development (World Bank)
INPRES	"Instructsi President" (National Grant Programs)
IUIDP	Integrated Urban Infrastructure Development Program
LRM	Local Resource Mobilization
MFSP	Municipal Finance and Shelter Project
MHA	Ministry of Home Affairs
MIS	Management Information Systems
MOF	Ministry of Finance
MPW	Ministry of Public Works
PAP	Policy Action Plan
PBB	Tax on Land and Buildings
PDAMs	Public Water Enterprises
PERUMNAS	National Urban Development Agency
PMES	Performance Monitoring and Evaluation System
RDA	Regional Development Account
REI	National Investment Bank
REPELITA	National Five-Year Development Plan
RIAP	Revenue Improvement Assistance Program
SLA	Subsidiary Loan Agreement
SOW	Statement of Work
TA	Technical Assistance
TKPP	Coordination Team for Urban Development
UNDP	United Nations Development Program
USAID	United States Agency for International Development

ACKNOWLEDGEMENTS

This report, "Design and Implementation Strategies for an Urban Sector Performance Monitoring and Evaluation System (PMES)" was prepared by a two-person PADCO team comprised of John Dalton, PADCO's Director of Public Finance and Management, and Eddie Cendana, an Indonesian computer systems analyst/consultant associated with PADCO for this assignment. The field work was conducted between August 6 and September 3, 1990.

The PADCO team worked under the direction of Mr. William M. Frej, Urban Advisor in USAID/Jakarta's Economic Policy Support Office (EPSO). Additional Mission guidance was provided by EPSO Director Peter Gajewski; Mission Economist, Lee Ann Ross; and Gene Galbraith/PSC. Hal Sullivan/PSC at the Ministry of Finance facilitated our data collection and fact-finding activity.

We would like to express our sincere appreciation to the many Indonesian public officials who gave their time and advice to support our consultancy. Without their gracious sharing of information our work would not have been possible.

Section 1

INTRODUCTION

The United States Agency for International Development (USAID)/Jakarta is implementing a broad urban sector policy support program, through both a $100 million Housing Guaranty Loan (HGL) and a technical assistance and training grant which finances the advisory services of the Municipal Finance and Shelter Project (MFSP). These timely investments directly support the ongoing efforts of the Government of Indonesia (GOI) to implement an Urban Development Policy Action Plan consisting of Objecuves/Goals/ Outputs in each of the following areas:

1. Development of urban infrastructure, including operation and maintenance thereof, in principle, is within the authority and responsibility of the Local Governments, with the assistance and guidance of the provincial (Level I) and Central Governments.

2. Planning, programming and setting up of investment priorities as well as implementing for urban development by Central and Local Government will be continued and accelerated by a decentralized and integrated approach through the "Integrated Urban Infrastructure Development Program", among others.

3. In order to develop Local Government responsibility for providing urban service, there will be further strengthening of the Local Government's capability to realize resources and optimize the use of funds.

4. In accordance with the principles of decentralization of urban service responsibilities, the Government will, in addition to the measures described under Policy 3, endeavor to improve the financing system for urban services development, the purpose of the development would be:

   a. Strengthen Central-Local Government borrowing scheme to enable local governments to meet effective demand for urban services investments;

   b. Provide incentives for local resource mobilization and borrowing;

   c. Improve the quality of projects proposed and selected by strengthening appraisal methodology and processes; and,

   d. Make the Central-Local grant system more responsive to social, economic and strategic policy considerations.

5. The responsibility of Provincial (Level I) Local Government's staff and institutions to execute urban development activities more effectively in the context of strengthening their roles and responsibilities will be enhanced by institutional development, procedural improvement, where appropriate, as well as training to be provided by means of a coordinated programme of Local Government manpower development.

6. Coordination and consultation between the various agencies and levels of Government—Central, Provincial and Local—involved in Urban Development will continue to be strengthened for the

smooth implementation of development activities and to provide a mechanism for review and formulation of future sector policy recommendations.

Primary responsibility for implementing this policy agenda is shared among several national government agencies, notably the Ministry of Finance (MOF), Ministry of Public Works (MPW) and Ministry of Home Affairs (MHA) with the support of the National Development Planning Agency (BAPPENAS) and through an inter-Ministerial Coordination Team for Urban Development (TKPP).

USAID's support for this effort through HGL and MFSP have been considerable, through both financial and advisory assistance. While USAID has constructively endorsed the entire PAP and GOI's ongoing efforts to strengthen the Indonesian urban sector, it has concentrated MFSP on three strategic targets within the GOI's broad urban development policy framework, namely:

1. Continued improvement in the role of the central government in funding urban infrastructure and services affordable to low-income households through a system of grants and loans that encourage local resource mobilization;

2. Strengthened capacity of the local government finance system to mobilize and manage resources; and,

3. Establishment of the foundation for increased private sector participation in the financing and provision of urban infrastructure and services.

Each of these targets is closely linked to each other, to the above-referenced PAP and to the Mission's overall strategy and approach as reflected in the five point Mission Program Performance Contract (Annex 1) and the CDSS.

One of the fundamental management requirements of such a broad and ambitious agenda is a monitoring and evaluation system to track performance across a broad spectrum of urban finance, management and service delivery areas. USAID/Jakarta retained PADCO to provide management advisory services, specifically (a) to identify quantitative indicators of performance and (b) to develop a system and implementation strategy for monitoring and evaluating the MFSP and its impact on the urban sector in Indonesia. In addition, the Statement of Work required PADCO to provide direct input into the monitoring system through a baseline data set of key indicators.

This assignment was carried out between August 1 (actual field work began in Indonesia on August 6) and September 3, 1990 and consisted of the following major tasks:

1. Recommend quantitative performance indicators to monitor and evaluate the MFSP in the broader context of Indonesia's urban sector.

2. Collect and analyze available data for the purpose of creating a baseline data set of key indicators which would facilitate future performance monitoring and evaluation.

3. Determine how data collection and analysis procedures to support the monitoring effort could be routinized and institutionalized within the GOI bureaucracy.

4. Develop a performance monitoring and evaluation system covering both information management and institutional management concerns which would enable the GOI and USAID to determine performance and measure its impact on the urban population, especially those below median income.

The results of our analysis are presented in this report. Section 2 describes the principles and criteria we used to assess both the current procedure and our alternatives to it. Recommended indicators for performance monitoring and evaluation are provided in Section 3. The baseline date set itself, which we also provided in diskette format, as well as a data collection and analysis methodology for extending the baseline to the Provincial and City level, is the subject of Section 4.

Section 5 contains our management recommendations for the next phase of this effort and for the long-term administration of a performance monitoring and evaluation system. Section 6 briefly discusses what the GOI and USAID should do in the near term to operationalize the system in a way which promotes its sustainability.

Section 2

MONITORING FRAMEWORK

Monitoring will enable the GOI to: a) assess its performance and impact in certain defined areas associated with the HGL/MFSP, the Urban Development PAP and the overall urban sector, and b) inform concerned decision-makers about the implications of that assessment so that appropriate actions may be taken. Establishing the purpose of monitoring—why monitoring would be performed—was a fundamental precondition to our development of a basic strategy for what should be monitored as well as an approach for how it should be managed. While this may appear to be an elementary exercise, it was fundamental to our work because so much of the system design effort depended on a GOI/USAID consensus to these "why - what - how" questions. After consultation with both USAID and GOI officials we believe that a common understanding exists between them as to why a monitoring system is required.

The system design and management implications of defining the purpose of monitoring in this manner are:

1. The monitoring system will be implemented by agencies of the GOI, which will be responsible for its operation and maintenance. To the greatest extent possible, monitoring builds upon existing data collection and management systems.

2. The data should be specific to the urban area and satisfy project, policy and sector monitoring objectives. This will enable the overall system to "grow", over time, as better data become available.

3. The data/information must address both current and future concerns in order to enable the GOI both to assess performance and measure its impact.

4. Analysis of the data/information will be applied to the system's output so that management decisions (e.g. the allocation of technical assistance or financial resources) can be made by appropriate GOI and USAID decision-makers.

Resolving this fundamental framework issue provided us with guidance concerning every other aspect of the performance monitoring and evaluation system. Our next step was to establish the scope of monitoring, i.e. the focus of data collection and analysis.

A. THE FOCUS FOR MONITORING

By thoroughly reviewing USAID and GOI documents concerning HGL/MFSP and the PAP, and building upon the guidance provided in the Statement of Work we determined what would need to be monitored. The three major MFSP outputs were considered

Previous Page Blank

primary areas for which performance monitoring and evaluation data would be required. We then looked at the GOI's Urban Development PAP for ways to apply a more expansive definition to the three output descriptions so that the data captured at the agency level would permit a broader, more sectoral, interpretation of performance and impact.

We recommend the following five major areas as the focus for performance monitoring and impact evaluation:

1. National Aid
2. Local Resource Mobilization
3. Private Sector Participation
4. Service Delivery
5. Shelter

Each of these five areas encompasses several data variables. They have been combined under one heading to assure that the multiple "dimensions" of each area are brought together to facilitate analysis. For example, in the Local Resource Mobilization area, both the mobilization and expenditure of resources are combined so that the benefits of positive revenue generation performance on individuals can be monitored and evaluated. A similar approach has been adopted for each of the four other areas, when appropriate. A brief explanation of what is included in each of the five areas follows.

National Aid - includes the various means by which the central government disburses revenue to local governments. It is broader than the "grant system" (INPRES), since it also encompasses subsidiary loan agreements (SLA) as well as those loans which local entities may apply for once RDA is converted to a financing facility, per se.

Local Resource Mobilization - concentrates on local own-source taxes, fees and charges (Pajak Asli Daerah), as well as the local share of PBB receipts. The data variables under this area also include local budgets for both routine and development expenditures in order to determine how the mobilized resources are actually used to deliver services at the local level.

Private Sector Participation - because of the lack of in-depth data in this area, "proxy" data variables are used to monitor and evaluate performance. For example, business tax receipts may be used as a measure of the availability of an active private sector in each Province; commercialization of public enterprises is a proxy measure of privatization of public services. As data improve, additional variables can be added to the data base.

Service Delivery - focuses on the level of annual investment in local infrastructure as well as the service coverage for three basic services: water, sanitation and solid waste collection. These latter three variables are only available from Census data at

five- and ten-year intervals. Special surveys are used to compensate for this data deficiency.

Access to Affordable Shelter - consists of housing finance and production data from official sources, as well as survey data or estimates of informal housing.

Other possible areas for monitoring were considered, but not included as a focal point for the basic "quantitative" monitoring system at this time. These included environment, economic development, employment and foreign private investment, all of which could add to the richness of a comprehensive urban data base. In addition, monitoring participant training activities and tracking non-quantitative factors are also aspects of the monitoring system which should be considered in the future.

At this time, however, we believe that it is more important to concentrate on those areas where a definite correlation exists between the MFSP and the PAP, particularly where the extension of the scope for monitoring and evaluation would require entities not directly involved in either MFSP or PAP. We believe that it is more realistic to wait until a limited number of directly concerned GOI agencies have become familiar with the basic requirements of data collection and reporting before expanding the scope to include new features or new organizations.

B. PERFORMANCE MONITORING AND EVALUATION INDICATORS

For each of the five areas we developed a set of preliminary indicators for monitoring and evaluating performance. We incorporated the list provided by USAID within our more expansive selection to cover all concerns. Our primary criterion, at this stage, was to assure that indicators were capable of "quantitative" measurement. The following are the monitoring and evaluation indicators recommended for each of the five areas:

1. NATIONAL AID TO LOCAL GOVERNMENTS
Performance Monitoring Indicators
1. Increase in number and amount of loans to local levels 2. Increase in number of RDA borrowers 3. Increase in INPRES share to low-income regions 4. Increase in amount and percent of IUIDP financed by loans
Performance Evaluation Indicators
1. Grant funds (INPRES) per capita to low-income regions are higher in FY 1991-92 and FY 1993-94 than in FY 1988-89. 2. Actual disbursements for IUIDP projects indicate that loan proceeds are higher in FY 1991-92 and FY 1993-4 than in FY 1988-89. 3. RDA loan disbursements are higher in FY 1991-92 and FY 1993-4 than in FY 1988-89.

2. LOCAL RESOURCE MOBILIZATION
Performance Monitoring Indicators
1. Increase in local own-source revenues 2. Increase in PBB receipts 3. Percent increase in portion of local government development budgets financed by own-source revenues 4. Decrease in unexpended local surpluses 5. Percent increase in portion of local development expenditures from loan proceeds
Performance Evaluation Indicators
1. Local own-source revenues are higher in FY 1991-92 and FY 1993-4 than in FY 1988-89. 2. Local own-source revenues "cover" a higher portion of the local development budget in FY 1991-92 and FY 1993-4 than in FY 1988-89. 3. PBB receipts "cover" a higher portion of local current expenditures in FY 1991-92 and FY 1993-4 than in FY 1988-89.

3. PRIVATE SECTOR PARTICIPATION

Performance Monitoring Indicators

1. Increase in local business tax collections
2. Increase in IUIDP financing by the private sector
3. Increase in domestic private sector financing for PDAMs
4. Increase in actual incidence of private sector operation, financing, or management of public services
5. Increase in number of commercially viable PDAMs/BUMDs

Performance Evaluation Indicators

1. Percent commercialization of PDAMs in FY 1991-92 and FY 1993-4 is higher than in FY 1988-89.
2. Domestic private investment in water enterprises is higher in FY 1991-92 and FY 1993-4 than in FY 1988-89.
3. Private sector non-agricultural employment constitutes a higher share in 1990 than in 1985 and a higher share in 1995 than in 1990.

4. SERVICE DELIVERY

Performance Monitoring Indicators

1. Increase in local development expenditures as a percentage of total expenses
2. Percent increase in households with piped water
3. Percent increase in households with adequate sanitation
4. Percent increase in households with solid waste collection services

Performance Evaluation Indicators

1. Percent of households served with piped water is greater in FY 1991-92 and FY 1993-4 than in FY 1988-89.
2. Percent of households served with adequate sanitation is greater in FY 1991-92 and FY 1993-4 than in FY 1988-89.
3. Percent of households served with adequate solid waste collection services is greater in FY 1991-92 and FY 1993-4 than in FY 1988-89.
4. National share of aggregate local development budgets is declining.

5. ACCESS TO AFFORDABLE SHELTER
Performance Monitoring Indicators
1. Increase in the number of housing units produced 2. Increase in the number of private housing units produced 3. Increase in the number of mortgages issued by private banks 4. Increase in the number of housing units (formal and informal) added to the existing baseline
Performance Evaluation Indicators
1. Increase in housing production from 1989-92 in relation to the projected rate of urban population growth 2. Increase in private housing finance as a percentage of the total number of housing units financed from 1989 to 1992 and from 1992 to 1994 3. Percent of income allocated for housing in 1992 relative to 1988 (estimate) and percent in 1994 relative to 1992

C. SOURCES OF DATA: GOI AGENCIES

After identifying these key performance monitoring and evaluation indicators for each of the five areas, we then determined which organization within the GOI would be most appropriate to collect, analyze and report upon the status of the data variables associated with each indicator. We utilized a "responsibility center" guideline for this activity so as to link each indicator to its source within an organization at the national level.

This approach was used both to verify the location of official data and to determine, through observation and interviews, the capacity and willingness of each of the concerned national agencies to process and report information in a timely and competent manner. Since accurate collection, reporting and consolidation of data by many different organizations would be critical to the overall monitoring effort, maximizing the participation and performance of existing responsibility centers would contribute, in the long term, to a more effective and sustainable system.

Statutory and functional responsibility alone often assures only token involvement. By comparison, when organizations, through their managers, see a reciprocal benefit to their commitment of staff time and other resources, the quality of their participation is usually higher. A monitoring strategy that treats GOI institutions not merely as sources of data but rather as full participants and beneficiaries of the system output will have a much higher chance of sustained operation. This "value-added" orientation to the design and implementation of the MFSP/urban sector monitoring system should pay dividends, both for the GOI and USAID.

The principal agencies which would "share" some responsibility for data input into a performance monitoring and evaluation system, whose scope is defined above, are:

1. Ministry of Finance
2. Ministry of Public Works
3. Ministry of Home Affairs
4. BAPPENAS
5. Ministry of Housing

Other agencies would be sources of data (e.g. BPS, BKPM), but would not be participants in the actual consolidation of data in the monitoring and evaluation data base. The designated data center would be required to establish linkages to these outside sources.

D. LEVELS/LIMITS FOR LOCAL GOVERNMENT DATA ANALYSIS

One of the basic objectives of the MFSP is to increase local government resource mobilization (LRM). Accordingly, performance monitoring and evaluation of LRM was assured. But, one issue was open to review—the number of cities/urban places for which data would be collected and analyzed. Based on our review of data from numerous sources we recommend that only local data from the 27 Provinces and 49 large cities (kotamadya) whose revenue and expenditure information is separately reported should be included in the data base. Five cities in DKI Jakarta report on a consolidated basis as a single Province. Exhibit 1, at the end of this section, lists the Provinces and Cities which should be incorporated within the monitoring and evaluation framework.

E. APPROACHES TO MONITORING

There are two different, but related approaches to monitoring and evaluation. One approach, termed performance monitoring, refers to a system in which actual performance is monitored and evaluated by reference to an existing baseline. Performance monitoring compares the present to the past. Achievement is subjectively determined. Progress monitoring, on the other hand, measures achievement relative to a pre-defined target. Data is collected and analyzed so as to compare what has been done to what was planned to be done. A progress monitoring approach defines the future and then compares the present to it.

We have focused on performance monitoring, consistent with the SOW, and because the negotiation of targets for many indicators could delay the start-up of monitoring activity.

F. FREQUENCY OF MONITORING & REPORTING

The fact that performance reports are typically produced on an annual basis often leads to the mistaken conclusion that monitoring itself occurs "just-in-time" to generate a report. A good monitoring system encourages monitoring throughout the course of the year with the annual performance report confirming the findings and conclusions reached

during the entire year. Consequently, when we refer to the Data Collection Period as "annual", we mean that the performance reporting period is annual, not that monitoring is only to occur once a year.

EXHIBIT 1

Province	Kotamadya
1. D.I. Aceh	Banda Aceh
	Sabang
2. Sumatera Utara	Binjai
	Pematang Siantar
	Sibolga
	Tanjung Balai
	Medan
3. Sumatera Barat	Bukit Tinggi
	Padang
	Padang Panjang
	Payakumbuh
	Sawah Lunto
	Solok
4. Riau	Pekanbaru
5. Jambi	Jambi
6. Sumatera Selatan	Palembang
	Pangkal Pinang
7. Bengkulu	Bengkulu
8. Lampung	Bandar Lampung
9. D.K.I. Jakarta	Jakarta Barat
	Jakarta Pusat
	Jakarta Selatan
	Jakarta Timur
	Jakarta Utara
10. Jawa Barat	Bandung
	Bogor
	Sukabumi
	Cirebon
11. Jawa Tengah	Pekalongan
	Salatiga
	Tegal
	Semarang
	Magelang
	Surakarta
12. D.I. Yogyakarta	Yogyakarta
13. Jawa Timur	Blitar
	Kediri
	Madiun
	Probolinggo
	Surabaya
	Malang
	Mojokerto
	Pasuruan
14. Kalimantan Barat	Pontianak
15. Kalimantan Tengah	Palangkaraya
16. Kalimantan Tengah	Banjarmasin
	Kota Baru
17. Kalimantan Timur	Balikpapan
	Samarinda
18. Sulawesi Utara	Gorontalo
	Manado
19. Sulawesi Tengah	--
20. Sulawesi Tenggara	--
21. Sulawesi Selatan	Ujung Pandang
	Pare Pare
22. Bali	--
23. Nusa Tenggara Barat	--
24. Nusa Tenggara Timur	--
25. Maluku	Ambon
26. Irian Jaya	--
27. Timor Timur	--

Section 3

PERFORMANCE MONITORING AND EVALUATION INDICATORS

After meeting with GOI agency personnel and reviewing the status and quality of data associated with each item on the "long list" of performance monitoring and evaluation indicators, we were able to narrow the list of candidate indicators considerably by applying the following three criteria:

1. **Clarity of the Indicator** - to assure that the output of the monitoring system would demonstrate a direct and obvious measurement of performance in areas of interest and concern to GOI management and other users of the data;

2. **Availability of Data** - since even the "best" indicator would be of no practical use if information about it was unavailable, inaccurate or very costly to generate. Through extensive review of documents and by meeting with officials of numerous national agencies we were able to determine the overall quality and availability of data associated with each indicator, and thereby narrow the list of potential indicators; and,

3. **Reliance on "Authority"** - both to verify the official status of the information and to determine whether agencies which would be expected to have responsibility for data collection, storage and reporting in the future had the current capacity to manage information. Our preference was to use sources which had the statutory authority to collect the data from their client organizations rather than other sources which had collected the information for other purposes.

The final set of indicators reflect our judgment that even if the data upon which an indicator's measurement is based are not currently available, the indicator should be included in our recommended final list, as long as data are assumed to be available in the future. By listing the indicator at this time, it is hoped that attention will be drawn to the need to improve data collection in that area.

A. MONITORING INDICATORS

Performance monitoring of the PAP and MFSP/urban sector will be based on 22 indicators organized into five major areas to facilitate data collection, analysis and reporting. This relatively small number of indicators will enable the GOI to test data collection and management procedures for a manageable number of institutions before expanding the system to cover more areas or organizations. The recommended indicators should be seen as the foundation for a more comprehensive future system.

Monitoring indicators within each of the five areas are listed and explained below. The objective for monitoring as well as the recommended frequency of data collection is provided.

1. NATIONAL AID

NATIONAL AID TO LOCAL GOVERNMENTS
OBJECTIVE: To monitor the performance of national government in the form, methodology, and level of resources allocated to local governments Indicators: 1. Increase in number and amount of loans to local levels 2. Increase in number of RDA borrowers 3. Increase in INPRES share to low-income regions 4. Increase in amount and percent of IUIDP financed by loans Data Collection Frequency: Quarterly, Annual

Since national aid to Level I and II governments is provided in a variety of "forms" (i.e., grants, loans, subsidiary loan agreements, operating subsidies, earmarked development assistance, discretionary development assistance and national projects implemented locally), performance indicators would need to be devised to enable the GOI and USAID to monitor the absolute and relative level of these separate funding sources as well as the percentage of total aid which each of them represents.

The Policy Action Plan (Items 1 & 4) and USAID's MFSP Output 1 were the primary sources for the selection of performance monitoring and evaluation indicators in this category.

INDICATOR 1: Increase in number and amount of loans to local levels

RATIONALE: One of the primary urban policy objectives of the GOI is to change national aid to local government from an over-reliance on grants to a mix of grants and loans in order to encourage local cost sharing of the financial burden of national development. Increases in the number of loans and the total value of borrowed funds by local governments would be a positive indicator that the GOI's policy objective was being advanced.

However, much of the local borrowing for infrastructure projects is in the form of Subsidiary Loan Agreements (SLA). This is a method of passing through to local governments the cost of national borrowing for infrastructure development. Local governments do not

apply for these loans; nor is their creditworthiness ascertained as a precondition to this form of financing.

We assume that this SLA procedure will continue over the MFSP implementation period. Consequently, this indicator must be balanced by some other measures of performance in order to determine if local financial capacity and resource mobilization is being promoted.

INDICATOR 2: Increase in number of RDA borrowers

RATIONALE: Assuming the establishment of the Regional Development Account (RDA) and the implementation of procedures to test both project feasibility and borrower creditworthiness, an increase in the number of RDA borrowers would indicate that local financial capacity was being strengthened and that resources were being mobilized to implement development projects.

The distribution of borrowers, derived from the above, is also a proxy for regional wealth. A concentration of borrowers in certain Provinces would indicate that other Provinces were less able to avail themselves of this funding mechanism. This information could then be compared with other monitoring system output to indicate appropriate targets for technical and financial assistance.

INDICATOR 3: Increase in INPRES share to low-income regions

RATIONALE: Targeting financial assistance to below-median income households is an objective of both the GOI and USAID. One means of determining whether this policy objective has been "internalized", is to examine the correlation between the extent of poverty and the relative shares of INPRES allocated to each Province. How this is done will require careful analysis of population and poverty statistics published by the Central Bureau of Statistics in 1992.

Per capita INPRES allocations may be used as the data variable to support performance monitoring of national policies to promote social objectives. However, other non-INPRES approaches also may be utilized by the GOI to achieve the same purpose. Consequently the monitoring system must be flexible enough to adapt to these potential alternatives while maintaining a focus on responsiveness of the national distribution system to the needs of the poor.

INDICATOR 4: Increase in amount and percent of IUIDP financed by loans

RATIONALE: This monitoring indicator will enable the GOI and USAID to determine the <u>actual</u> level and portion of local infrastructure financed by loans. The focus of

monitoring will be annual loan proceeds actually mobilized by local governments, rather than amounts budgeted for plan implementation. This indicator directly supports monitoring of policy achievement of PAP Items 2,3 & 4.

Over the next several years IUIDP may be modified to encompass other functions and/or may be reoriented to address equity concerns. As the scope of IUIDP changes, the monitoring strategy must also be adjusted. In any circumstance, however, IUIDP financing sources will need to be monitored as a measure of both national aid and local resource mobilization.

2. LOCAL RESOURCE MOBILIZATION

LOCAL RESOURCE MOBILIZATION
OBJECTIVE: To monitor increases in the level and percent of locally-mobilized resources compared to the prior baseline Indicators: 1. Increase in local own-source revenues 2. Increase in PBB receipts 3. Percent increase in portion of local government development budgets financed by own-source revenues 4. Decrease in unexpended local surpluses 5. Percent increase in portion of local development expenditures from loan proceeds Data Collection Frequency: Annual

Monitoring in this area will cover several related factors in order to address both the revenue generation and resource allocation dimensions of Local Resource Mobilization (LRM). Over the past few years absolute increases in local own-source revenue have been considerable, accounting in part for the accumulation of surplus funds at Level I and Level II.

Over the same time period, the trend line for development expenditures has remained relatively flat, although large increases in INPRES grants are programmed under REPELITA V. Monitoring LRM, therefore, will require absolute, relative and comparative analyses to determine whether policy objectives are being achieved.

INDICATOR 1: Increase in local own-source revenues

RATIONALE: Local own-source revenues (Pendapatan Asli Daerah) include those taxes, fees and service charges which are authorized under applicable national laws. Since there is very little incentive to collect local taxes nor much scope for the creation of new sources of local income, (e.g. by changing either the tax base or rate of assessment), improved resource mobilization from own-sources may indicate a commitment by local leaders to the principles of both cost sharing and decentralized management.

One of the categories of own source revenue which could be independently monitored in the future is "Retribusi Daerah", fees for services provided by a local government. Although many items are relatively minor sources of income, in the aggregate, they represent one of the fastest growing categories of local revenue. Since this is one area where local authorities have some discretion/control over rates. it may be possible to treat increases of this type as an indicator of local commitment to resource mobilization.

INDICATOR 2: Increase in PBB receipts

RATIONALE: Sharing of property tax (PBB) receipts with local governments is a significant aspect of the overall urban policy financing strategy. Property taxes, although generated locally, are part of the national government's "revenue sharing" program. They are not local own-source revenues. Accordingly, PBB information will be monitored initially as a disbursement of the national government and then, to determine its relative importance among revenues shared, as a receipt at local levels. PBB may also be considered as a measure of the private wealth of a community. Therefore, it may be possible to correlate this information with other monitoring data to determine a community's ability to pay for services.

Improved PBB collections is one of the priorities of the PAP. Significant investment of time and resources is being made by the GOI to develop the capacity of local governments to generate additional revenue from this source. Under current distribution guidelines, however, there is not a "performance" incentive for any individual local government to improve its collection efficiency. PBB collections for all local governments are pooled at the national level and then redistributed on a formula basis to all local governments. Accordingly performance monitoring of PBB should probably be limited to aggregate totals for each Level until such time as local governments are permitted to retain what they collect.

INDICATOR 3: Percent increase in portion of local government development budgets financed by own-source revenue

RATIONALE: Items 1 & 2 of the GOI's PAP and MFSP Outputs 1 & 2 establish local government infrastructure planning, financing and management as key priorities. This indicator is designed to monitor local performance toward that policy objective. The standard local accounting system for "Development Receipts" includes a line item for local funds (Dana Daerah Sendiri). In most Level I and II local governments this represents about 15-25% of total Development Receipts. By monitoring this percentage of locally financed infrastructure costs it may be possible to determine whether policy objectives are being achieved.

As an alternative, monitoring of this indicator could be accomplished by comparing the total development expenditure to total own-source revenue. Since these revenues do not actually finance infrastructure, the rationale for this comparison would be to establish an infrastructure cost coverage ratio, similar to the debt coverage ratios used to determine ability to repay debt under conventional project feasibility routines.

INDICATOR 4: Decrease in unexpended local surpluses

RATIONALE: Local governments, in aggregate, have unexpended cash balance of approximately 400 billion rupiah. This is equivalent to nearly 50% of the total infrastructure development budget for all local governments in Indonesia. Mobilizing these resources over the next five years would demonstrate a significant increase in local capacity to finance infrastructure, a key policy objective of both the PAP and the MFSP. A decline in the total surplus (assuming constant or increasing development expenditure levels) should be an indicator of local financing of infrastructure or services.

INDICATOR 5: Percent increase in portion of local development expenditures from loan proceeds

RATIONALE: This indicator is directly correlated to both PAP and MFSP resource mobilization objectives. Financing infrastructure through local debt is one of the most critical indicators of mobilization/allocation, since it tracks how locally controlled financial inputs (loan proceeds) are converted into outputs which service community needs. Actual disbursements of loan proceeds are extremely difficult to identify in local accounting records. Therefore, it is recommended that loan proceeds under the "Development Receipts" portion of local accounting records be used as the basis for determining whether local governments are utilizing loans rather than grants to finance their development projects.

3. PRIVATE SECTOR PARTICIPATION

PRIVATE SECTOR PARTICIPATION
OBJECTIVE: To monitor changes in the level and variety of private sector financing of local infrastructure and services Indicators: 1. Increase in local business tax collections 2. Increase in IUIDP financing by the private sector 3. Increase in domestic private sector financing for PDAMs 4. Increase in actual incidence of private sector operation, financing, or management of public services 5. Increase in number of commercially viable PDAMs/BUMDs Data Collection Frequency: Annual

This is a very important monitoring area for both the GOI and USAID. The PAP (Items 1-4) includes private sector participation, "privatization", private sector financing, etc., as policy objectives to be pursued. One of the three outputs of the MFSP is increased private sector participation in the financing and provision of public services. In addition, the Mission's overall focus on privatization and open markets increases the need to monitor this area.

Most of the current examples of "privatization" are anecdotal or speculative. Data in this area is not routinely collected by any government agency, although private investment generally is tracked by both BKPM and Bank of Indonesia. Over time this data may be available in a form that will permit more incisive monitoring. Presently, however, proxy measures will need to be used to satisfy monitoring requirements.

INDICATOR 1: Increase in local business tax collections

RATIONALE: Local accounting records separately identify "Corporate Registration Taxes (Pajak Pendaftaran Izin Perusahaan) under the Local Taxes portion of local receipts. It is an important source of revenue for cities, often representing over 30% of total tax collections. Monitoring this area will provide an indication of business formation, private investment and the existence of a general atmosphere supportive of private sector participation. It also could be used as a means of targeting technical assistance.

Like most of the indicators in this area it does not provide a clear indication of privatization per se, but rather indicates the potential for privatization.

INDICATOR 2: Increase in IUIDP financing by the private sector

RATIONALE: This indicator is directly related to MFSP Output 3, "the private financing of urban infrastructure and services". The financing plans for IUIDP implementation (RIAPs) include budget estimates concerning the planned expenditure of private funds to implement the overall development plan. However, there is no way to verify this information since the private investment, if provided, is not recorded on any official public records. With this limitation in mind, however, it may still be useful to collect data of this type from MPW since the requirement to report the data serves as a reminder that the private sector is expected to finance a significant share of local infrastructure costs to meet PAP objectives and satisfy USAID output targets.

Because of the uneven geographic distribution of IUIDP plans and the absence of RIAPs for many areas, national summaries of this performance indicator would be very misleading. Accordingly, we have recommended that the MFSP TA team review provincial data and periodically report private investment information to USAID.

INDICATOR 3: Increase in domestic private sector financing for PDAMs

RATIONALE: Local water enterprises (PDAMs) are the only public authorities which, as a class, currently operate on commercial principles. The Central Bureau of Statistics conducts a survey of all water enterprises on two-year intervals (1986-1988-1990) and publishes national and Provincial summaries of relevant statistics. Because this data may indicate the economic viability of these institutions as perceived by the private sector, monitoring the level of private sector financing (in conjunction with other measures of profitability) will provide an indicator of the potential for privatization of both individual enterprises and PDAMs generally.

While this may be an indirect measure of privatization, it is a direct measure of the GOI's private sector participation objective. Data indicates that private investment in water enterprises increased substantially (+220%) between 1985-86 and 1987-88. It is assumed that the trend will continue upward, indicating private sector confidence in water enterprise viability. It is assumed that private sector debt might be converted to private sector equity in a supportive policy environment.

INDICATOR 4: Increase in actual incidence of private sector operation, financing or management of public services

RATIONALE: Information about privatization of public services in Indonesia is extremely limited. There are anecdotes, rumors, proposals, and the like, but very little empirical evidence of actual investment. Contracting for waste collection services, apparently in commercial areas, is reported in Jakarta and a few other urban areas, but

there is no discernible pattern of private sector behavior which would indicate that the policy objectives of the PAP are being achieved.

Accordingly, the recommended monitoring routine is to identify actual cases of private sector participation and to report the number of incidences by Province. Responsibility for this activity should be assigned to the MFSP technical assistance team.

INDICATOR 5: Increase in number of commercially viable PDAMs/BUMDs

RATIONALE: Public services operating on a commercially viable basis are indicative of "privatization". PDAMs are independent water enterprises which are independently managed. BUMDs are still under the direct authority and control of local government. Monitoring this indicator involves tracking the number of enterprises which move into an independent status and determining how many of the independent and publicly managed enterprises are commercially viable (i.e, cover expenses, debt service and depreciation through tariff revenues).

4. SERVICE DELIVERY

SERVICE DELIVERY
OBJECTIVE: To monitor changes in the level of investment and extent of coverage of selected urban services relative to the existing baseline Indicators: 1. Increase in local development expenditures as a percentage of total expenses 2. Percent increase in households with piped water 3. Percent increase in households with adequate sanitation 4. Percent increase in households with solid waste collection services Data Collection Frequency: Annual

This area is concerned with monitoring the availability and affordability of essential public services—water, sanitary facilities and garbage collection. Information of this type is collected through either the national decennial Census and/or special surveys conducted in a limited sample of cities and households. One of the monitoring problems presented by the infrequency of data collection is the inability to act upon the information presented in a timely and effective manner. By the same token, sampling permits estimates of national conditions, but limits actual financial, programmatic or technical responses to the cities involved in the original survey.

Typically, these types of indicators are more appropriate for evaluation than monitoring since the data changes so infrequently. However, both to respond to USAID urban sector data requirements and to maintain a continuing reference point for the GOI's urban policy formulation and program development/financing activities, these service delivery indicators could be included in the monitoring and reporting process.

INDICATOR 1: Increase in local development expenditures as a percentage of total expenses

RATIONALE: This indicator should enable the GOI to monitor whether local governments are assuming a greater share of the financial burden of infrastructure investment, consistent with PAP Item 1. Since local resources are limited, the allocation of funds to development objectives, rather than to current expense, would suggest that the policy objective was understood by local decision-makers and they were acting upon it. However, the impact of inflation on construction materials also may be a contributing factor to increases in local development budgets. It is important that the analyst look beyond the data to determine policy progress.

INDICATOR 2: Percent increase in households with piped water

RATIONALE: This is one of the basic indicators of urban service delivery. Data is collected at five- and ten-year intervals by the Central Bureau of Statistics. The data is aggregated and published for all Level I local governments. It is assumed that individual city data could be obtained as a special report. The 1990 Census data is expected to be available in 1992. Statistical sampling may be an alternative approach to data collection for monitoring purposes. The data from these surveys must be treated with caution - in terms of concluding that policy objectives are being achieved—since the selection of the sample may account for increases in service levels.

INDICATOR 3: Percent increase in households with adequate sanitation

RATIONALE: This information is collected on the same basis as household water connections (i.e., census and special survey). However, the definition of "sanitation" may encompass more than water-borne sewage. It is possible, therefore, for the number of households provided with sanitation to be greater than the number served with piped water. In addition, survey results traditionally overstate the number of households served because of the tendency of individuals to claim the existence of sanitation even when none exists. This may account for part of the remarkable jump in the baseline data between 1985 and 1988.

INDICATOR 4: Percent increase in households with solid waste collection services

RATIONALE: Information concerning the level of refuse collection and disposal is collected at five- and ten-year intervals by the Central Bureau of Statistics and by special surveys in a limited sample of cities. This indicator does not distinguish between those served by the public sector and those served by the private sector, a distinction which might be incorporated in special surveys commissioned by USAID.

5. ACCESS TO AFFORDABLE SHELTER

ACCESS TO AFFORDABLE SHELTER
OBJECTIVE: To monitor the production of housing by public and private sources relative to the existing baseline Indicators: 1. Increase in the number of housing units produced 2. Increase in the number of private housing units produced 3. Increase in the number of mortgages issued by private banks 4. Increase in the number of housing units (formal and informal) added to the existing base Data Collection Frequency: Annual

This performance monitoring area, unlike the four others, is not directly linked to either the PAP or MFSP, but has been selected for inclusion because of the importance of USAID's $100 million Housing Guaranty Loan to the entire urban sector strategy, including housing finance and production. In addition, the private financing of housing is one of the most effective measures of urban private investment and could serve as a vehicle for other private investments in housing-related infrastructure.

One of the management issues raised by the inclusion of this area within the basic monitoring system is the fact that the sources of housing related data are not directly involved in implementation of either the PAP or MFSP. Accordingly, collecting data for monitoring purposes may entail special procedures.

INDICATOR 1: Increase in the number of housing units produced

RATIONALE: Housing production data (public and private) is available on an annual basis although not from a single source. What is currently lacking. however, is an

accurate baseline of existing dwelling units against which the annual increments can be compared. The 1990 Census will provide the baseline, but that information is expected to be available in 1992. In the meantime "year-to-year" monitoring and/or monitoring relative to housing production targets included in REPELITA V may be sufficient.

The distribution of new private sector housing production is an indirect indicator of investor confidence and credit availability. Accordingly, determining the location of housing investment would be a useful subset of information if the information could be centrally collected and analyzed.

INDICATOR 2: Increase in the number of private housing units produced

RATIONALE: This indicator is directly related to the first indicator and to the private sector portion of the total housing baseline. Tracking the annual increment of private sector financed housing will provide an indicator of how production levels are responding to estimated demand. This relative measure of investment could be enhanced by city-level data, reported through BAPPEDAs perhaps, which would enable analysts to determine the relationship between housing production and urban growth rates.

INDICATOR 3: Increase in the number of mortgages issued by private banks

RATIONALE: Tracking changes in this indicator will enable the GOI and USAID to determine whether private housing unit construction is concentrated on multi-unit developments, typically available to upper income households, or if mortgages are being made available for construction of individual residential units. Based on this indicator, more in-depth analysis will be possible to determine the distribution of housing.

Data on private sector housing finance is difficult to obtain and, even when available, must be interpreted in the context of a cultural reluctance to reveal details of private financial transactions. This limitation on private housing valuation data explains why only BTN mortgage value data is recommended for inclusion in the monitoring system.

INDICATOR 4: Increase in the number of housing units (formal and informal) added to the existing base

RATIONALE: This indicator attempts to enhance the official statistics on formal housing units by the addition of data on informal housing, a major source of urban housing production in Indonesia. There is at present, no informal housing reporting mechanism. In reality it may be impossible to do anything more than estimate the number of informal units. By including "informal housing" on the basic list of urban sector monitoring indicators, the requirement for a more structured and organized data collection effort by the GOI is established.

Once again, however, the absence of a useful baseline of informal housing data will limit the scope of performance monitoring in the initial years of its operation.

B. EVALUATION INDICATORS

Evaluation indicators have been selected to reinforce monitoring within each of the five areas. It is assumed that the evaluation periods will be for the three year period between FY 1988-89 and FY 1991-93 and then for a two year period between FY 1991-92 and FY 1993-94. If other dates are selected the indicators are still valid, only the reference dates will need to be changed.

Evaluation indicators within each of the five areas are listed below. The objective for evaluation as well as the recommended data collection frequency is provided. Since the data variables for performance evaluation are the same as those for performance monitoring, no additional explanation is considered necessary at this time.

1. NATIONAL AID

NATIONAL AID TO LOCAL GOVERNMENTS
OBJECTIVE: To evaluate how changes in the national grant system have promoted decentralization and increased the availability of infrastructure to low-income regions (provinces) Indicators: 1. Grant funds (INPRES) per capita to low-income regions are higher in FY 1991-92 and FY 1993-94 than in FY 1988-89. 2. Actual disbursements for IUIDP projects indicate that loan proceeds are higher in FY 1991-92 and FY 1993-4 than in FY 1988-89. 3. RDA loan disbursements are higher in FY 1991-92 and FY 1993-4 than in FY 1988-89. Data Collection Frequency: Biannual

2. LOCAL RESOURCE MOBILIZATION

LOCAL RESOURCE MOBILIZATION
OBJECTIVE: To evaluate the change in local resource mobilization at a designated period, relative to the original baseline Indicators: 1. Local own-source revenues are higher in FY 1991-92 and FY 1993-4 than in FY 1988-89. 2. Local own-source revenues "cover" a higher portion of the local development budget in FY 1991-92 and FY 1993-4 than in FY 1988-89. 3. PBB receipts "cover" a higher portion of local current expenditures in FY 1991-92 and FY 1993-4 than in FY 1988-89. Data Collection Frequency: Years Indicated

3. PRIVATE SECTOR PARTICIPATION

PRIVATE SECTOR PARTICIPATION
OBJECTIVE: To evaluate how and to what extent increased private sector participation in urban services or financing has contributed to improved or increased services Indicators: 1. Percent commercialization of PDAMs in FY 1991-92 and FY 1993-4 is higher than in FY 1988-89. 2. Domestic private investment in water enterprises is higher in FY 1991-92 and FY 1993-4 than in FY 1988-89. 3. Private sector non-agricultural employment constitutes a higher share in 1990 than in 1985 and a higher share in 1995 than in 1990. Data Collection Frequency: Annual, Biannual

4. SERVICE DELIVERY

SERVICE DELIVERY
OBJECTIVE: To evaluate the change over time in urban service levels and assess the effects on the urban population Indicators: 1. Percent of households served with piped water is greater in FY 1991-92 and FY 1993-4 than in FY 1988-89. 2. Percent of households served with adequate sanitation is greater in FY 1991-92 and FY 1993-4 than in FY 1988-89. 3. Percent of households served with adequate solid waste collection services is greater in FY 1991-92 and FY 1993-4 than in FY 1988-89. 4. National share of aggregate local development budgets is declining. Data Collection Frequency: Years Indicated

5. ACCESS TO AFFORDABLE SHELTER

ACCESS TO AFFORDABLE SHELTER
OBJECTIVE: To evaluate how the level of formal and informal housing produced since 1989 has affected urban areas Indicators: 1. Increase in housing production from 1989-92 in relation to the projected rate of urban population growth 2. Increase in private housing finance as a percentage of the total number of housing units financed from 1989 to 1992 and from 1992 to 1994 3. Percent of income allocated for housing in 1992 relative to 1988 (estimate) and percent in 1994 relative to 1992 Data Collection Frequency: Annual, Biannual

Section 4

BASELINE DATA

While our extensive data collection efforts produced enough reliable information to generate three baseline data sets of key indicators (Figures 1, 2, and 3), we believe that valuable information for MFSP/urban sector performance monitoring and evaluation could be assembled if the national institutions actually responsible for data collection were requested to collect and report a few key data elements. The sooner data collection, storage and retrieval discipline is institutionalized in those national agencies responsible for urban sector information management, the more likely the success of the PMES.

It is important to note, however, that a monitoring and evaluation system requires a different type of data than a management information system. Selective use of key variables is the key to monitoring and evaluation. In addition, the multi-year, time series approach to analysis present very different data base design requirements than more operationally oriented systems. Ideally, the output of a carefully designed MIS can be the input to monitoring. However, except for a budgetary control and management reporting system in MPW, we did not observe any MOF or MHA data base applications which would be able to report key variables for monitoring purposes. BAPPENAS does utilize data base software (dBASE) as the principal component of its PC network, but the outputs from this installation were not able to be reviewed during the study period.

Consequently, baseline data were very difficult to collect. Some raw data, from incomplete computerized data bases, were made available for our use. However, it was not possible to extract from this mass of statistics the information needed to prepare a baseline data set. We relied upon other sources for the data which have been included here. We believe that unless a specific data collection and reporting responsibility is established and implemented, existing data limitations will restrict PAP and MFSP monitoring and evaluation.

Three separate spreadsheets, constituting the baseline data set, have been provided. A definition of terms has also been provided (Figure 4). A "Baseline Data Summary: Indonesia (Total)" summarizes key national and local data. There are several gaps in the baseline data set due to absence of data (e.g., Local Resources for 1988-89) and/or inconsistencies in year-to-year reporting (i.e., 1986-87 Public Investment data). Service level data is only available for the years indicated due to the periodic nature of data collection for these data variables. The "Level I (Provincial): Baseline Finance Data" is more complete, but changes in the composition of some data categories made it preferable to omit early statistics. Otherwise, the calculations of percentage changes could be misleading. "Level II (Kotamadya/Kabupaten): Baseline Finance Data" is fairly complete but reflects two significant data limitations. First, data are not disaggregated for cities (kotamadyas). We recommend that urban sector monitoring should be concentrated on 49 kotamadyas. But the data was not available at this time for a segment of the Level II

Previous Page Blank

data base. Consequently, there is no "urban" focus to the baseline data set. A second major limitation is the fact that the most current finance data are two years old. Monitoring from this data base is of marginal utility. We have determined that the major reason for these deficiencies is the magnitude of the data base and its inability to extract key data items for focused monitoring. The data are available at the source (kotamadyas) and at the point of collection (MHA) but cannot be reported because the total date base is unmanageable. This accounts for our near-term strategy to collect key data elements rather than count on the development of comprehensive management information systems as the solution to these problems.

Following the three baseline data spreadsheets are lists of the data variables which constitute the basic data base for performance monitoring and evaluation (Figures 5, 6, 7, 8, and 9). For each item we have identified the source of the data as well as the years for which data should be collected. Many of the 28 key data variables are currently incomplete. This deficiency in the data base should be corrected if our management recommendations are followed.

FIGURE 1: BASELINE DATA SUMMARY : INDONESIA (TOTAL)

(BILLION RUPIAH)	1985/86	1986/87	% CHANGE (1)	1987/88	% CHANGE	1988/89	% CHANGE
1. NATIONAL AID							
INPRES (GENERAL)	576.3	566.7	(1.7)	654.1	13.5	710.8	23.3
2. LOCAL RESOURCE MOBILIZATION							
A. ROUTINE REVENUE	4280.4	4514.7	5.5	4871.9	22.5	--	--
OWN SOURCE	792.1	902.4	13.9	1060.0	33.8	--	--
% OWN SOURCE	17.0	20.0	17.7	21.8	28.2	--	--
B. DEVELOPMENT EXPENDITURES	914.3	987.1	8.0	968.9	6.0	--	--
C. UNEXPENDED FUNDS/SURPLUS	294.2	230.2	(21.8)	331.0	12.5	--	--
D. LOANS AGREEMENTS	25.0	270.0	980.0	270.0	980.0	370.0	1,380.0
3. PRIVATE INVESTMENT/SHELTER							
A. WATER SERVICE	3.8	XX	--	12.2	221.1	--	--
B. HOUSING (MORGAGE ISSUED BY BTN)	301.0	379.0	25.9	299.0	(0.7)	399.0	32.6
4. PUBLIC INVESTMENT							
A. WATER SUPPLY	131.7	XX	--	246.8	87.4	241.8	83.6
B. DRAINAGE	51.7	XX	--	103.6	100.4	113.1	118.8
C. HUMAN AND SOLID WASTE	17.7	XX	--	72.0	306.8	101.1	471.2
D. KIP	40.7	XX	--	38.8	(4.7)	57.4	41.0
E. ROADS	75.6	XX	--	146.7	94.0	196.5	159.9
5. URBAN SERVICES DELIVERED							
A. % HOUSEHOLDS W/PIPED WATER	32	XX	--	31	(3.1)	XX	--
B. % HOUSEHOLDS W/SANITATION	38	XX	--	79	107.9	XX	--
C. % HOUSEHOLDS W/GARBAGE COLLECTED	39	XX	--	40	2.6	XX	--

NoteS :
(1) % Change are measured from baseline : 1985/86
-- : Data not available during data collection effort; XX : Data not collected for reference period.

FIGURE 2: LEVEL I (PROVINCIAL): BASELINE FINANCE DATA (BILLION OF RUPIAH)

(BILLION RUPIAH)	1985/86	1986/87	% CHANGE	1987/88	% CHANGE	1988/89	% CHANGE
1. NATIONAL AID							
A. SUBSIDY (1)	--	--	--	2141.4	--	2388.7	11.5
B. REVENUE SHARING	--	--	--	157.8	--	213.6	35.3
2. LOCAL REVENUE							
A. ROUTINE REVENUE	2908.0	3020.5	3.9	3228.3	11.0	3651.5	25.6
OWN SOURCE	533.3	608.8	14.2	717.0	34.4	814.2	52.7
% OWN SOURCE	18.3	20.2	10.4	22.2	21.3	22.2	21.3
3. LOCAL EXPENDITURES							
A. ROUTINE EXPENSE	2002.1	2144.9	7.1	2296.4	14.7	2540.1	26.9
- of which PERSONNEL	1511.6	1654.5	9.5	1781.3	17.8	1919.2	27.0
B. DEVELOPMENT EXPENSE	671.9	738.0	9.8	699.5	4.1	811.2	20.7
- of which REGIONAL DVLPT	104.0	108.3	4.1	82.8	(20.4)	116.2	11.7
- of which HOUSING	14.6	17.1	17.1	16.5	13.0	17.8	21.9
- of which BUSINESS DVLPT	19.6	22.5	14.8	27.2	38.8	25.6	30.6
4. SURPLUS	234.0	138.0	(41.0)	232.0	(0.9)	300.0	28.2
5. LOANS							
A. RECEIPTS	--	--	--	5.4	--	8.7	61.1
B. DISBURSEMENTS	10.3	8.1	(21.4)	4.2	(59.2)	0.3	(97.1)

Note :
(1) Includes INPRES and SDO
(2) % Change are measured from baseline : 1985/86
(3) -- : Not available during the data collection effort/different format

(BILLION RUPIAH)	1985/86	1986/87	% CHANGE	198[illegible]	C[illegible]	1988/89	% CHANGE
1. NATIONAL AID							
A. SUBSIDY (1)	876.6	941.5	7.4	1[illegible]	14.1	XX	--
B. REVENUE SHARING	125.2	--	--	206.5	64.9	XX	--
2. LOCAL REVENUE							
A. ROUTINE REVENUE	1372.4	1494.2	8.9	1643.6	19.8	XX	--
- OWN SOURCE	258.8	293.6	13.4	343.6	32.8	XX	--
- % OWN SOURCE	18.9	19.6	3.7	20.9	10.6	XX	--
3. LOCAL EXPENDITURES							
A. ROUTINE EXPENSE	1069.9	1158.9	8.3	1275.5	19.2	XX	--
- of which PERSONNEL	812.2	849.6	4.6	912.3	12.3	XX	--
B. DEVELOPMENT EXPENSE	242.4	249.1	2.8	269.4	11.1	XX	--
- of which LOCAL DEVELOPMENT	22.3	28.5	27.8	30.0	34.5	XX	--
- of which HOUSING	9.7	12.9	33.0	7.9	(18.6)	XX	--
- of which BUSINESS DEVELOPMENT	9.2	10.8	17.4	10.5	14.1	XX	--
4. SURPLUS	60.2	92.2	53.2	99.0	64.5	XX	--
5. LOANS							
A. RECEIPTS	44.5	XX	--	35.2	(20.9)	XX	--
B. DISBURSEMENTS	9.9	10.2	3.0	15.7	58.6	XX	--

Note :
(1) Includes INPRES and SDO
(2) % Change are measured from baseline : 1985/86
(3) -- : Not available during data collection effort; XX : Data not available for reference period.

FIGURE 4: BASELINE DATA SUMMARY: INDONESIA (TOTAL)	
INDICATORS	
1. NATIONAL AID	
A. INPRES (GENERAL)	Not including sectoral INPRES
2. LOCAL	
A. ROUTINE REVENUE	All local revenue not including sectoral INPRES & Loan
OWN SOURCE	Local revenue (PAD), not including PBB
% OWN SOURCE	
B. DEVELOPMENT EXPENDITURES	Expenditure for 17 local development sectors
C. UNEXPENDED FUNDS/SURPLUS	Balance carried forward for the following year
D. LOANS AGREEMENTS	Subsidiary loan agreement with local government
3. PRIVATE INVESTMENT/SHELTER	
A. WATER SERVICE	Investment in regional water enterprise
B. HOUSING (MORTGAGE ISSUED BY BTN)	Mortgage issued to private developers
4. PUBLIC INVESTMENT	Total investment (National + Local)
A. WATER SUPPLY	Total investment in water supply
B. DRAINAGE	Total investment in drainage
C. HUMAN AND SOLID WASTE	Total investment in human waste and solid waste
D. KIP	Total investment in KIP
E. ROADS	Total investment in roads
5. URBAN SERVICES DELIVERED	
A. % HOUSEHOLDS W/PIPED WATER	% Household with drinking water from piped source
B. % HOUSEHOLDS W/SANITATION	% Households with toilet & bath
C. % HOUSEHOLDS W/GARBAGE COLLECTED	% Household having garbage collected

FIGURE 5

PERFORMANCE MONITORING BASELINE DATA SET FOR KEY INDICATORS NATIONAL AID

1. INPRES (General) for 27 Provinces and 49 Kotamadyas for Fiscal Years 1988-1989, 1987-88, 1986-87, 1985-86
   SOURCES: MOF, MHA
   CROSS REFERENCE: BPS

2. LOANS TO LOCAL GOVERNMENT for 27 Provinces and 49 Kotamadyas for Fiscal Year 1988-89, 1987-88
   SOURCES: BANK OF INDONESIA (RDA), MOF - INCOMPLETE
   CROSS REFERENCE: BPS, MHA

3. COMMERCIAL LOANS TO LOCAL GOVERNMENT for 27 Provinces and 49 Kotamadyas for Fiscal Year 1988-89, 1987-88, 1986-87
   SOURCES: MHA
   CROSS REFERENCE: MOF, BPS

4. IUIDP FINANCING PLANS (RIAPs) for 27 Provinces for Fiscal Year 1988-89, 1988-89,1987-88
   SOURCES: MPW - INCOMPLETE
   CROSS REFERENCE:

5. IUIDP FINANCING FROM LOANS/Actual Disbursements for 27 Provinces
   SOURCES: MPW - INCOMPLETE
   CROSS REFERENCE:

6. PROVINCIAL POPULATION: % urban; % below-median income
   SOURCES: BPS - INCOMPLETE
   CROSS REFERENCE:

7. NATIONAL GOVERNMENT SUBSIDY/Routine Revenue for 27 Provinces and 49 Kotamadyas for Fiscal Year 1988-89, 1987-88, 1986-87
   SOURCES: MHA
   CROSS REFERENCE: MOF

FIGURE 6

PERFORMANCE MONITORING BASELINE DATA SET FOR KEY INDICATORS
LOCAL RESOURCE MOBILIZATION

1. LOCAL GOVERNMENT REVENUE: OWN SOURCE/Actual Receipts for 27 Provinces and 49 Kotamadyas for Fiscal Years 1988-1989, 1987-88, 1986-87
   SOURCES: MHA
   CROSS REFERENCE: MOF, BPS

2. PROPERTY TAX RECEIPTS (Local Share)/Actual Receipts for 27 Provinces and 49 Kotamadyas for Fiscal Year 1988-89, 1987-88, 1986-87
   SOURCES: MHA
   CROSS REFERENCE: MOF, BPS

3. LOCAL GOVERNMENT SURPLUS/Unexpended Balance for 27 Provinces and 49 Kotamadyas for Fiscal Year 1988-89, 1987-88, 1986-1987
   SOURCES: MHA
   CROSS REFERENCE: MOF

4. LOCAL GOVERNMENT LOANS FROM RDA/Agreements for Fiscal Years 1989-90, 1988-89, 1987-88, 1986-87
   SOURCES: BANK OF INDONESIA (RDA)
   CROSS REFERENCE: MOF

FIGURE 7

PERFORMANCE MONITORING BASELINE DATA SET FOR KEY INDICATORS PRIVATE SECTOR PARTICIPATION

1. PRIVATE INVESTMENT (LOANS) TO PDAMs for 178 PDAMs for Fiscal Years 1987-88, 1986-87, 1985-86
   SOURCES: BPS SURVEY
   CROSS REFERENCE: MHA

2. IUIDP FINANCING PLANS (RIAPs): PRIVATE SOURCES for 27 Provinces for Fiscal Year 1989-90, 1988-89, 1987-88
   SOURCES: MPW - INCOMPLETE
   CROSS REFERENCE:

3. IUIDP FINANCING/Actual Private Investment
   SOURCES: MPW - INCOMPLETE
   CROSS REFERENCE:

4. COMMERCIAL VIABILITY OF PDAMs for 178 PDAMs for Fiscal Year 1987-88, 1986-1987, 1985-86
   SOURCES: BPS SURVEY
   CROSS REFERENCE: MHA

5. PRIVATE SECTOR INVESTMENT IN URBAN SERVICES
   SOURCES: INCOMPLETE
   CROSS REFERENCE:

6. PROVINCIAL EMPLOYMENT: % urban, % non-agriculture, % public sector for 1985, 1980, 1990
   SOURCES: BPS
   CROSS REFERENCE:

FIGURE 8

PERFORMANCE MONITORING BASELINE DATA SET FOR KEY INDICATORS SERVICE DELIVERY

1. LOCAL GOVERNMENT DEVELOPMENT EXPENDITURES/Actual Disbursements for 27 Provinces and 49 Kotamadyas for Fiscal Years 1988-1989, 1987-88, 1986-87
   SOURCES: MHA
   CROSS REFERENCE: MOF, BPS

2. LOCAL GOVERNMENT EXPENDITURES/Actual Disbursements for 27 Provinces and 49 Kotamadyas for Fiscal Year 1988-89, 1987-88, 1986-87
   SOURCES: MHA
   CROSS REFERENCE: MOF, BPS

3. HOUSEHOLDS SERVED/Selected Urban Services for 27 Provinces for the Year 1985, 1980
   SOURCES: BPS/CENSUS and INTER-CENSAL Survey, MPW
   CROSS REFERENCE: MOH

4. HOUSEHOLDS SERVED/Selected Urban Services based on a Survey of 9 Cities in the Year 1988
   SOURCES: MOH
   CROSS REFERENCE: URBAN INSTITUTE/P.T. DIAN HASFARM

5. PDAM FIXED ASSETS/Book Value (Acquisition Cost in Rupiah) for 178 PDAMs for the Fiscal Year 1987-88, 1986-87, 1985-86
   SOURCES: BPS/SURVEY
   CROSS REFERENCE: MHA

6. URBAN SERVICE COSTS/% Income Allocated to Service Delivery for Urban Households
   SOURCES: INCOMPLETE
   CROSS REFERENCE:

FIGURE 9

PERFORMANCE MONITORING BASELINE DATA SET FOR KEY INDICATORS SHELTER

1. HOUSING UNITS PRODUCED for 27 Provinces for Years 1988, 1987, 1986, 1985
   SOURCES: BPS, BTN, PERUMNAS, REI
   CROSS REFERENCE: MOH

2. HOUSINGS UNIT PRODUCED: PRIVATE SECTOR for 27 Provinces for Years 1988, 1987, 1986, 1985
   SOURCES: REI, BTN
   CROSS REFERENCE: MOH

3. PRIVATE SECTOR HOUSING FINANCE/Mortage Volume and Value (Rupiah) for 27 Provinces for Years 1989, 1988, 1987, 1986, 1985
   SOURCES: BTN
   CROSS REFERENCE: MOH

4. PRIVATE HOUSING AFFORDABILITY, QUALITY, TENURE, SERVICES etc./ Survey of 9 Cities in the Year 1988
   SOURCES: MOH
   CROSS REFERENCE: URBAN INSTITUTE/P.T. DIAN HASFARM

5. HOUSEHOLD (HH) income Allocated for Housing, 1988
   SOURCES: MOH - INCOMPLETE
   CROSS REFERENCE: URBAN INSTITUTE/P.T. DIAN HASFARM

Section 5

MANAGEMENT RECOMMENDATIONS

After defining the overall framework for monitoring, including the purpose, focus, indicators and baseline data—the why and what of MFSP/urban sector performance monitoring and evaluation—we then analyzed how the GOI might design, operationalize and administer an effective performance monitoring and evaluation system (PMES).

Figure 10, following, indicates the complex framework for monitoring and evaluation. The urban policies of REPELITA V and the Policy Action Plan (PAP) developed by the GOI to track activities in support of urban policy attainment are the driving forces for urban sector program design and performance.

The performance monitoring system will need to track all national government "outputs"—grants, loans, subsidies, etc.—to local governments and enterprises. In addition, it is necessary to identify revenues and expenditures at the local level as well as any private investment which directly supports public service delivery. Through financial reports and similar "inputs" to the monitoring system, national and local performance will be tracked.

The cyclical nature and interrelationships of this flow of activity/data reporting is also reflected in the diagram. Within this context we have devised a performance monitoring and evaluation strategy which addresses current and future requirements for data collection and reporting.

However, it is important to emphasize that we are not recommending a specific PMES structure, but rather a process which will facilitate the implementation of a PMES. We believe that a thorough Systems Requirements Study should be carried out before any long term decisions about PMES design or administration are made by the GOI. The type of study we endorse would document and evaluate the current configuration of GOI computer hardware/software and determine the number and availability of personnel trained in computer operations at each of the concerned agencies. Based on this inventory; a review of approved agency plans for additional computerization; and, an analysis of the hardware/software, data, manpower and management requirements associated with the implementation of the PMES itself, it then would be possible to lay out the overall strategy for installing, operating and maintaining a computerized MFSP/urban sector PMES.

The scope and cost of the System Requirements Study can be adjusted to fit the resource constraints, if any, faced by either the GOI or USAID. Since the monitoring system should be an ongoing responsibility of the GOI, it should assume primary responsibility for conducting the study itself. USAID, on the other hand, is better suited than the GOI to prepare the Terms of Reference for a Requirements Study.

Previous Page Blank

Figure 10

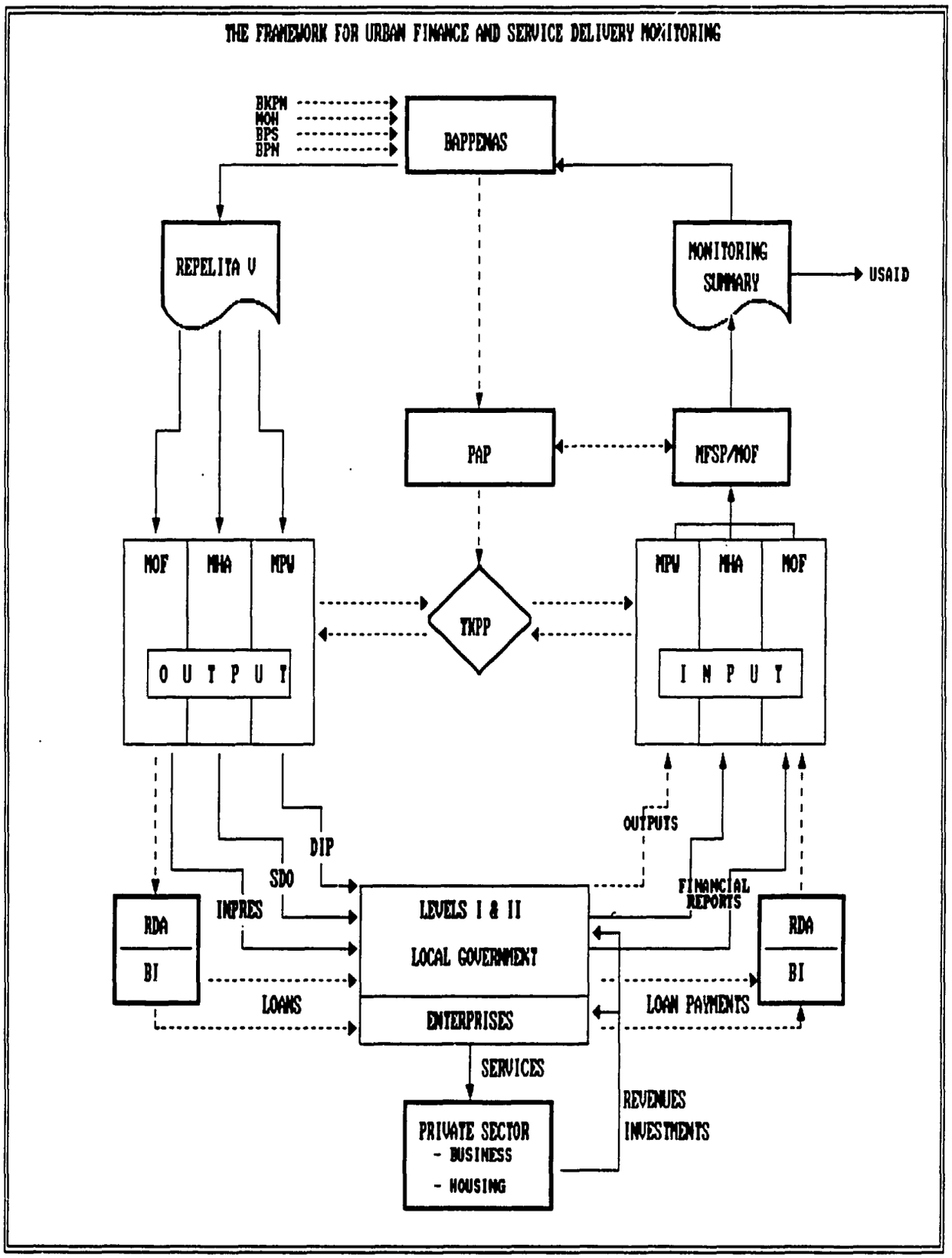
THE FRAMEWORK FOR URBAN FINANCE AND SERVICE DELIVERY MONITORING
BKPM
MOH
BPS
BPN
BAPPENAS
REPELITA V
MONITORING SUMMARY
USAID
PAP
MFSP/MOF
MOF
MHA
MPW
OUTPUT
TKPP
MPW
MHA
MOF
INPUT
OUTPUTS
DIP
SDO
INPRES
FINANCIAL REPORTS
RDA
BI
LEVELS I & II
LOCAL GOVERNMENT
RDA
BI
LOANS
ENTERPRISES
LOAN PAYMENTS
SERVICES
REVENUES
INVESTMENTS
PRIVATE SECTOR
- BUSINESS
- HOUSING

For more immediate use, we have developed general management guidelines on how to move ahead, in a systematic and managed fashion, with essential data collection activities which help to build experience and instill discipline in those agencies upon which PMES is likely to rely for accurate information. Our management suggestions fall into two categories:

1. Information management - which is based on the need, even at this stage, to support a distributed data entry/processing approach to information management at the operating agency level (the entry point for performance monitoring and evaluation data).

2. Institutional management - which is concerned with leadership and direction of the data collection, storage and reporting activity pending more permanent arrangements.

Our suggestions in these two areas assume that the start-up period will not extend beyond the end of the current fiscal year, March 31,1990, at which time the formal PMES should be operational.

A. INFORMATION MANAGEMENT

Start-up activity for information management has already begun. We recommend that upon acceptance of this report the GOI and USAID begin Monitoring System Implementation/Stage I, as depicted in Figure 11. The data collection spreadsheets, and the associated diskette, is intended as the means for staff at several national government agencies to concentrate on the computerization of a few key data elements.

The use of a standard, nearly universal, spreadsheet—Lotus 1-2-3—will make the automated information management process easier to introduce. Based on our observation and/or prior experience, each GOI agency to be involved in Stage I Implementation has current capability with this software package. The use of a standard format is designed to permit the consolidation of files for review and retrieval. We are not recommending the use of a data base management software (DBMS) package at this time. Rather, in much simpler fashion, agency-level diskettes will be combined into a summary set of worksheets from which aggregate reports can be generated.

Figure 12 depicts our view of how Stage II might operate. Only after a Requirements Study will the actual configuration be defined. For that Stage we assume the availability of a DBMS as the means of consolidating agency-supplied data and reporting results through both standard and customized output reports.

For the present we have concentrated on the development of a data collection methodology which will strengthen the current baseline data set and enable performance monitoring to begin even in advance of a formal system. We have developed nine (9)

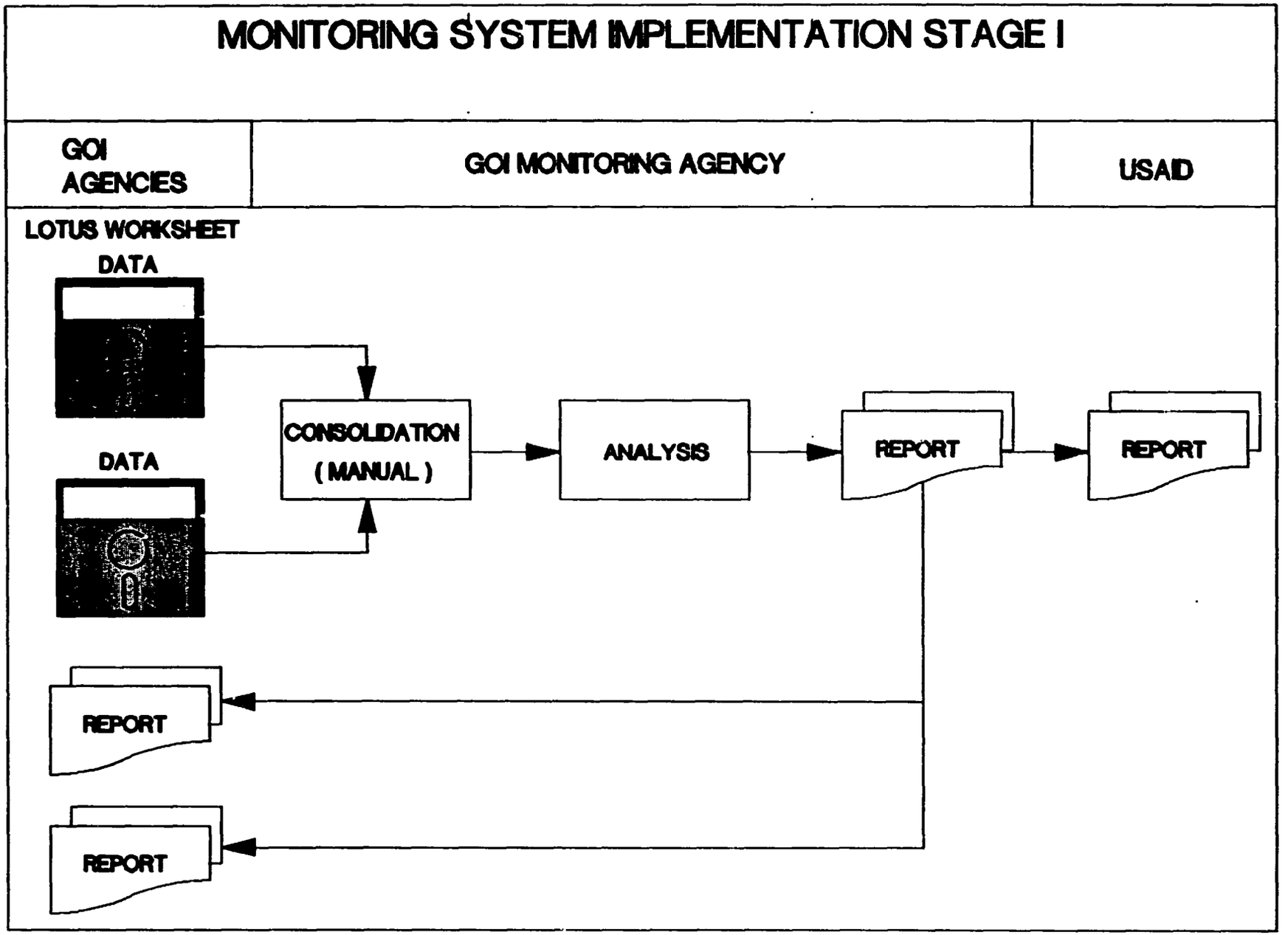
MONITORING SYSTEM IMPLEMENTATION STAGE I
GOI AGENCIES
GOI MONITORING AGENCY
USAID
LOTUS WORKSHEET
DATA
DATA
CONSOLIDATION (MANUAL)
ANALYSIS
REPORT
REPORT
REPORT
REPORT

Figure 11

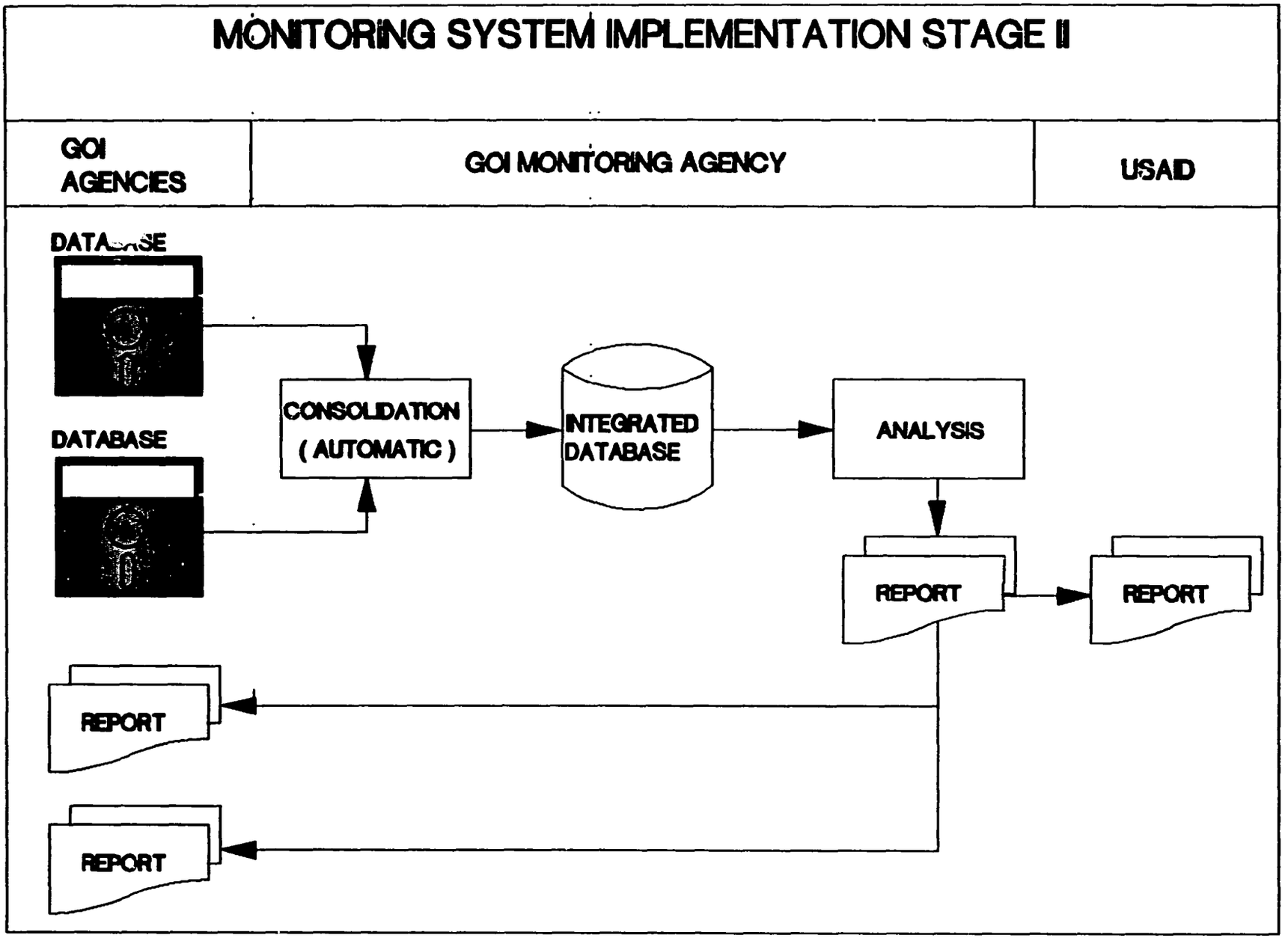
MONITORING SYSTEM IMPLEMENTATION STAGE II
GOI AGENCIES
GOI MONITORING AGENCY
USAID
DATABASE
DATABASE
CONSOLIDATION (AUTOMATIC)
INTEGRATED DATABASE
ANALYSIS
REPORT
REPORT
REPORT
REPORT

Figure 12

spreadsheets which closely correspond to the functional areas recommended as the framework for performance monitoring. The nine spreadsheets are called:

USAID00 - POPULATION STATISTICS
USAID01 - URBAN SERVICES
USAID02 - SHELTER
USAID03 - LOCAL RESOURCES
USAID04 - NATIONAL AID
USAID05 - DEVELOPMENT EXPENDITURES
USAID06 - PDAM PERFORMANCE
USAID07 - PRIVATE PARTICIPATION
USAID08 - BUMD PERFORMANCE

These spreadsheets are contained in Annex 2, at the end of this report.

There is not, by design, a one-to-one relationship between one national agency and one spreadsheet. In fact all have multiple sources of data input. The planned distribution of spreadsheets to agencies is shown below:

PROPOSED DISTRIBUTION LIST						
DATA	REF	MOF	MHA	MPW	MOH	BAPPENAS
Population statistics	USAID00		*	*	*	
Urban Services	USAID01		*	*	*	
Shelter	USAID02			*	*	
Local Resources	USAID03	*	*			
National Aid	USAID04	*	*	*		*
Development Expenditure	USAID05	*	*	*		
PDAM Performance	USAID06	*	*	*		
Private Participation	USAID07	*	*	*		
BUMD Performance	USAID08	*	*	*		

It is important to note that this procedure is designed to update the baseline data which has already been provided, but which is already 1-3 years old. By limiting the scope of data collection to a few elements it may be possible to assemble data more quickly and efficiently.

B. INSTITUTIONAL MANAGEMENT

The requirement that some agency collect spreadsheets and report results raises the question of which agency should take the lead at this stage of implementation. The candidate agencies for this role are MOF, BAPPENAS and TKPP. MOF is the lead agency for the MFSP while both BAPPENAS and TKPP are directly responsible for broad urban policy management. One of the criteria used to choose among them was capacity to provide leadership and training for agency personnel during the transition period toward a PMES.

In that respect BAPPENAS clearly has the capacity to serve as overall coordinator of the start-up activities. Their existing capacity will be strengthened considerably through the development of an IUIDP/MIS under the UNDP/IBRD technical assistance project now being mobilized. In fact BAPPENAS will be dealing with the same group of agencies which will be involved in data collection for the PMES. This linkage can be used to great advantage by promoting overall consistency in urban performance indicators.

However a strong case can be made that the requirements for MFSP monitoring should take precedence over any other factor. In that light, MOF should start now to build relationships and develop its capacity and would be the appropriate lead agency for this effort.

We resolved this conflict, in our own minds, by recognizing that this should not be an "either/or" decision, but rather should provide a way for both agencies to be involved from the beginning. The best approach appears to be one in which BAPPENAS takes responsibility for the initial data collection effort and assists MOF to develop a simple data base application which can integrate agency data and generate useful, but not very sophisticated reports.

In the long run we believe that the best approach to urban sector performance monitoring and evaluation is one in which MOF, BAPPENAS and TKPP share information provided to them as outputs of Ministry-level monitoring systems. The first step toward that long-range objective is the initiation of Stage 1 activity by BAPPENAS with immediate follow-up by MOF.

Section 6

NEXT STEPS

To capitalize on the progress which has been made toward the design and implementation of a PMES we recommend the following additional tasks which should be completed by USAID and the GOI over the next several months. These additional tasks will enhance the data baseline both in terms of its coverage and its level of detail and also lay the foundation for the future use of computerized data storage and reporting by GOI agencies.

Although many GOI national agencies assisted us to collect data, they were not actual "participants" in the data collection or system design effort. Consequently, only when this report is presented to them will they be aware of their expected role in data collection and monitoring. We believe that only under the leadership of a computer - competent GOI agency will it be possible to move ahead efficiently with implementation of the Stage I effort.

The most important next step, therefore is to secure the commitment of appropriate BAPPENAS officials that they are willing to assume responsibility for the management of the follow-on data collection effort described in Sections 4 & 5. Since their own IUIDP/MIS effort will closely correlate with USAID's monitoring system, there appears to be the basis for a joint data collection effort. Assuming agreement of this threshold issue the following system support tasks will be needed:

1. Develop a spreadsheet dissemination strategy and training program for data entry operators in designated agencies.

2. Establish data collection and reporting standards and provide on-site support, as needed.

3. Collect and consolidate data consistent with the routines depicted in Annex 3.

4. Update the baseline data files and generate reports. Based on progress achieved in designing the PMES itself it may be necessary to convert the Lotus files into a data base format. If this is decided it may be useful to acquire the services of consultants to assist in defining the data base file layout structure and determining the report generation procedures.

5. Distribute reports to participating agencies.

Previous Page Blank

These steps will enable the Mission to work closely with the GOI on the implementation of a short term strategy which directly supports the long range goal of an operational monitoring and evaluation system.

Three other follow-up steps are recommended. First, the Mission should prepare the Statement of Work for a System Requirements Study. We strongly recommend that the short term effort not be seen as an alternative to this more structured fact-finding and analysis procedure. Indonesian consultants, using the previous VIDCODATA study as a starting point, should be retained to perform this task and recommend a realistic design for the PMES.

Second, there is a need for non-statistical data to be collected over the life of the MFSP. Some of the items which fall into this category were listed as potential performance indicators in the SOW. We recommend a simple checklist approach to be implemented by the MFSP technical assistance team. Figure 13 is a suggested format for that activity. This approach should be negotiated with the TA team's Chief of Party.

Third, we recommend that the Mission consider retaining the Urban Institute/P.T Dian Hasfarm to replicate their 9 City survey on housing and urban services. We suggest that the survey be conducted in 1992 and perhaps in 1994. Used in conjunction with the 1985 Inter-Censal survey and the 1990 Census itself, a useful time series will be available for anticipated evaluations in those years.

ANNUAL PERFORMANCE TRACKING REPORT
Year:

No.	Kotamadya	IUIDP		Other Private Services	PDAM			Population Served
		% Loan	% Private		No.	No. RDA Eligible	Cost Recovery %	

Figure 13

ANNEX 1

USAID/Indonesia Program Performance Contract

ANNEX 1

USAID/INDONESIA
PROGRAM PERFORMANCE CONTRACT

Summary of Program Objectives

1. FREEING UP THE PRIVATE SECTOR

Developing a more open and market driven system of trade and investment. Freer markets will stimulate increased investment and thus increased numbers of and increased output from private sector firms.

2. MOBILIZING FINANCIAL RESOURCES

Increasing the scale of financial resources available for public sector and private sector investment as reflected in (a) the combined values of bank deposits and shares on the stock markets and (b) increased assumption of infrastructure costs at the local level.

3. REDEFINING THE ROLE OF GOVERNMENT

Redefining the role of government under a more open markets/private sector economy. This will be reflected in a transfer of GOI responsibility for provision of services to the private sector and a reduction of direct public ownership.

4. STRENGTHENING DEMOCRATIC INSTITUTIONS

Strengthening the basic democratic institutions which make possible more open, just, and pluralistic participation in government decision making.

5. SUSTAINING THE NATURAL RESOURCE BASE

Improving policies and management practices to halt environmental and natural resource degradation and to assure that natural resources are managed to sustain economic growth.

ANNEX 2

Baseline Data Spreadsheets

54

URBAN POPULATION FOR YEAR : 19../19..									
Province	Population		Private Employment		Total Employment		HH Income (Rp)	% HH Income expended	
	Urban	Total	Agriculture	Non	Urban	Non		for House	for services
D.I. Aceh									
North Sumatera									
West Sumatera									
Riau									
Jambi									
South Sumatera									
Bengkulu									
Lampung									
DKI Jakarta									
West Jawa									
Central Jawa									
D.I. Yogyakarta									
East Jawa									
Bali									
West Nusa Tenggara									
East Nusa Tenggara									
East Timor									
West Kalimantan									
Central Kalimantan									
South Kalimantan									

East Kalimantan									
North Sulawesi									
Central Sulawesi									
South Sulawesi									
South-East Sulawesi									
Maluku									
Irian Jaya									
Indonesia									
Source : BPS									

NATIONAL 19../19..

Province	DIP	INPRES		LOAN		RDA	
		GENERAL	SECTORAL	No's	Amount	No's	Amount
D.I. Aceh							
North Sumatera							
West Sumatera							
Riau							
Jambi							
South Sumatera							
Bengkulu							
Lampung							
DKI Jakarta							
West Jawa							
Central Jawa							
D.I. Yogyakarta							
East Jawa							
Bali							
West Nusa Tenggara							
East Nusa Tenggara							
East Timor							
West Kalimantan							
Central Kalimantan							
South Kalimantan							
East Kalimantan							
North Sulawesi							
Central Sulawesi							
South Sulawesi							
South-East Sulawesi							
Maluku							
Irian Jaya							
Indonesia							

Source : MHA, MOF, BAPPENAS
Cross Ref : BPS

LOCAL RESOURCE & EXPENDITURE FOR YEAR 19../19..
(Billion Rp)

Province	Local Resource		Local Expenditure		Development expenditure		Development Budget
	PBB (Local share)	PAD	Total expenditure	Development expenditure	financed by own source	financed by loan	
D.I. Aceh							
North Sumatera							
West Sumatera							
Riau							
Jambi							
South Sumatera							
Bengkulu							
Lampung							
DKI Jakarta							
West Jawa							
Central Jawa							
D.I. Yogyakarta							
East Jawa							
Bali							
West Nusa Tenggara							
East Nusa Tenggara							
East Timor							
West Kalimantan							
Central Kalimantan							
South Kalimantan							
East Kalimantan							
North Sulawesi							
Central Sulawesi							
South Sulawesi							
South-East Sulawesi							
Maluku							
Irian Jaya							
Indonesia							

Source : MHA
Cross Ref : MOF, BPS

West Sumatera								
Riau								
Jambi								
South Sumatera								
Bengkulu								
Lampung								
DKI Jakarta								
West Jawa								
Central Jawa								
D.I. Yogyakarta								
East Jawa								
Bali								
West Nusa Tenggara								
East Nusa Tenggara								
East Timor								
West Kalimantan								
Central Kalimantan								
South Kalimantan								
East Kalimantan								
North Sulawesi								
Central Sulawesi								
South Sulawesi								
South-East Sulawesi								
Maluku								
Irian Jaya								
Indonesia								

Source : MPW
Cross Ref : MHA, MOF

PDAM PERFORMANCE IN YEAR 19../19..

Province	No's of PDAM Implementing Nat'l Tariff	No's of PDAM Show Profit	Profit (Mil Rp)	New F Asset Acquired (Mil Rp)	Existing Asset Annual Depreciation (Mil Rp)	Grant Subsidies (Mil Rp)	Piped Water		Stand Pipe	
							# Connect	# Pop served	# Stand pipe	# Pop served
D.I. Aceh										
North Sumatera										
West Sumatera										
Riau										
Jambi										
South Sumatera										
Bengkulu										
Lampung										
DKI Jakarta										
West Jawa										
Central Jawa										
D.I. Yogyakarta										
East Jawa										
Bali										
West Nusa Tenggara										
East Nusa Tenggara										
East Timor										
West Kalimantan										
Central Kalimantan										
South Kalimantan										
East Kalimantan										
North Sulawesi										
Central Sulawesi										
South Sulawesi										
South-East Sulawesi										
Maluku										
Irian Jaya										
Indonesia										

Source : BPS, MPW
Cross Ref : MHA

PRIVATE SECTOR PARTICIPATION FOR YEAR 19../19..
(Mil Rp)

Province	Business Tax	IUIDP Financing	PDAM Financing	O&M Public Services	Foreign Investment
D.I. Aceh					
North Sumatera					
West Sumatera					
Riau					
Jambi					
South Sumatera					
Bengkulu					
Lampung					
DKI Jakarta					
West Jawa					
Central Jawa					
D.I. Yogyakarta					
East Jawa					
Bali					
West Nusa Tenggara					
East Nusa Tenggara					
East Timor					
West Kalimantan					
Central Kalimantan					
South Kalimantan					
East Kalimantan					
North Sulawesi					
Central Sulawesi					
South Sulawesi					
South-East Sulawesi					
Maluku					
Irian Jaya					
Indonesia					

Source : BPS, MPW
Cross Ref : MHA

61

BUMD PERFORMANCE IN YEAR 19../19..						
Province	No's of BUMD Show Profit	Profit (Mil Rp)	New Fixed Assets Acquired (Mil Rp)	Existing Asset Annual Depreciation (Mil Rp)	Grant Subsidies (Mil Rp)	Pop Served
D.I. Aceh						
North Sumatera						
West Sumatera						
Riau						
Jambi						
South Sumatera						
Bengkulu						
Lampung						
DKI Jakarta						
West Jawa						
Central Jawa						
D.I. Yogyakarta						
East Jawa						
Bali						
West Nusa Tenggara						
East Nusa Tenggara						
East Timor						
West Kalimantan						
Central Kalimantan						
South Kalimantan						
East Kalimantan						
North Sulawesi						
Central Sulawesi						
South Sulawesi						
South-East Sulawesi						
Maluku						
Irian Jaya						
Indonesia						

Source : MHA, MPW
Cross Ref : MOF

URBAN SERVICE DELIVERY FOR YEAR : 19.. /19..				
Province	(% Households Served)			KIP Coverage (Ha)
	Piped Water	Sanitation	Solid Waste	
D.I. Aceh				
North Sumatera				
West Sumatera				
Riau				
Jambi				
South Sumatera				
Bengkulu				
Lampung				
DKI Jakarta				
West Jawa				
Central Jawa				
D.I. Yogyakarta				
East Jawa				
Bali				
West Nusa Tenggara				
East Nusa Tenggara				
East Timor				
West Kalimantan				
Central Kalimantan				
South Kalimantan				
East Kalimantan				
North Sulawesi				
Central Sulawesi				
South Sulawesi				
South-East Sulawesi				
Maluku				
Irian Jaya				
Indonesia				

Source : BPS, MPW, MOH
Cross Ref : Urban Institute

SHELTER PRODUCTION AND FINANCING FOR YEAR : 19../19..					
Province	Housing Unit Produced			Mortgaged (Billion Rp)	
	Perumnas	Private	Informal	State Bank	Other Bank
D.I. Aceh					
North Sumatera					
West Sumatera					
Riau					
Jambi					
South Sumatera					
Bengkulu					
Lampung					
DKI Jakarta					
West Jawa					
Central Jawa					
D.I. Yogyakarta					
East Jawa					
Bali					
West Nusa Tenggara					
East Nusa Tenggara					
East Timor					
West Kalimantan					
Central Kalimantan					
South Kalimantan					
East Kalimantan					
North Sulawesi					
Central Sulawesi					
South Sulawesi					
South-East Sulawesi					
Maluku					
Irian Jaya					
Indonesia					

Source : PERUMNAS, REI, BTN
Cross Ref : MOH

ANNEX 3

Data Collection and Consolidation

NATIONAL AID INDICATORS PROCESSING

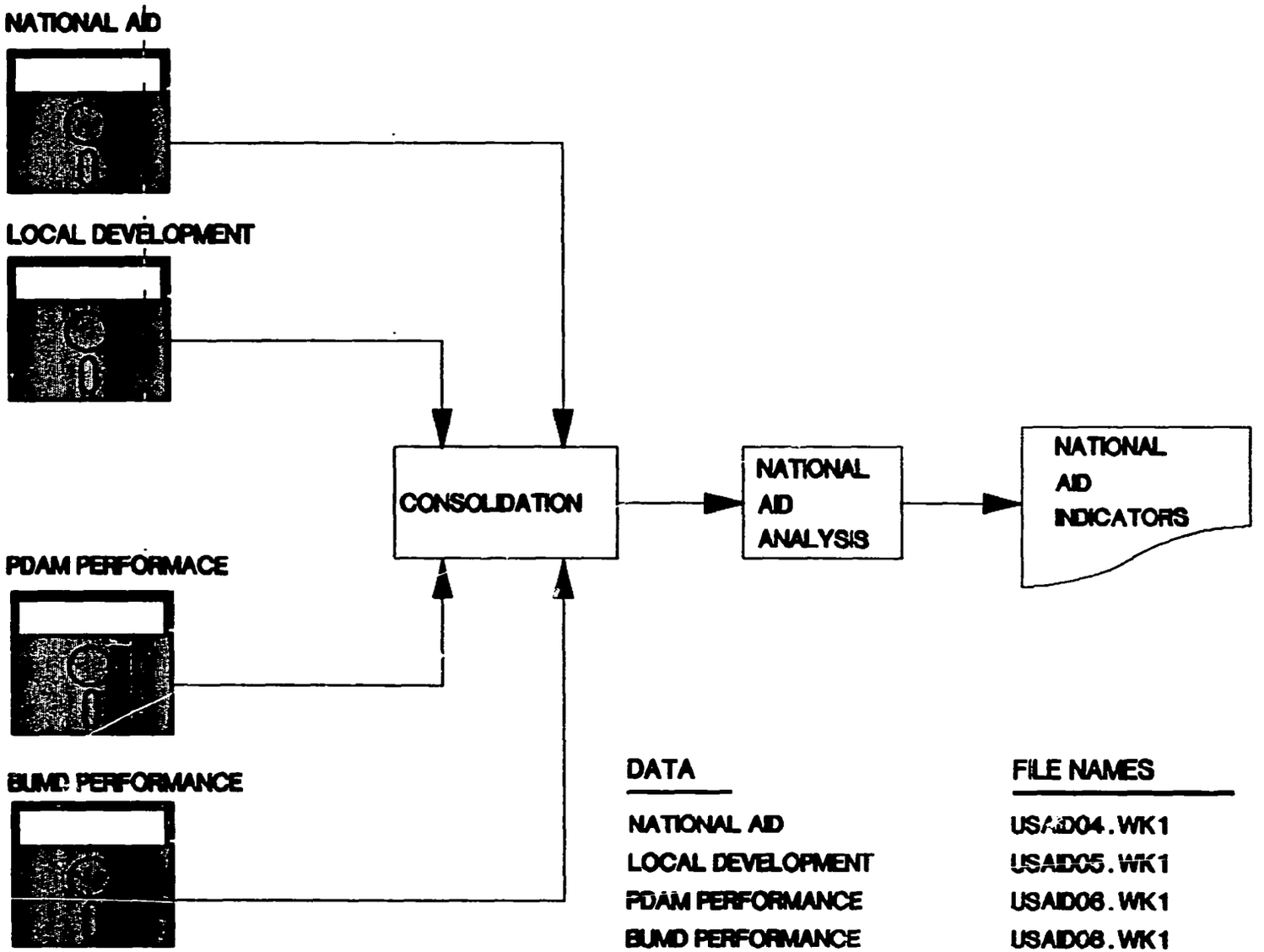

DATA	FILE NAMES
NATIONAL AID	USAID04.WK1
LOCAL DEVELOPMENT	USAID05.WK1
PDAM PERFORMANCE	USAID06.WK1
BUMD PERFORMANCE	USAID08.WK1

LOCAL RESOURCE MOBILIZATION INDICATORS

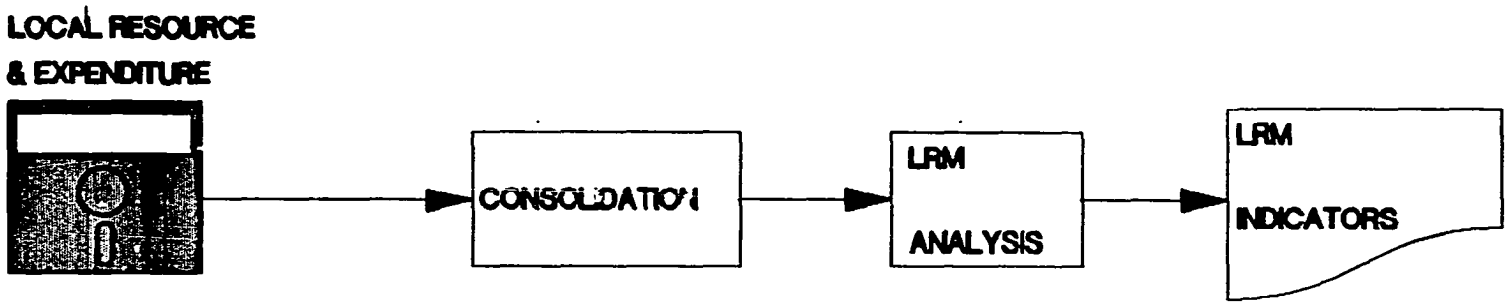

DATA	FILE NAMES
LOCAL RESOURCE & EXPENDITURE	USAID03.WK1

PRIVATE SECTOR INDICATORS PROCESSING

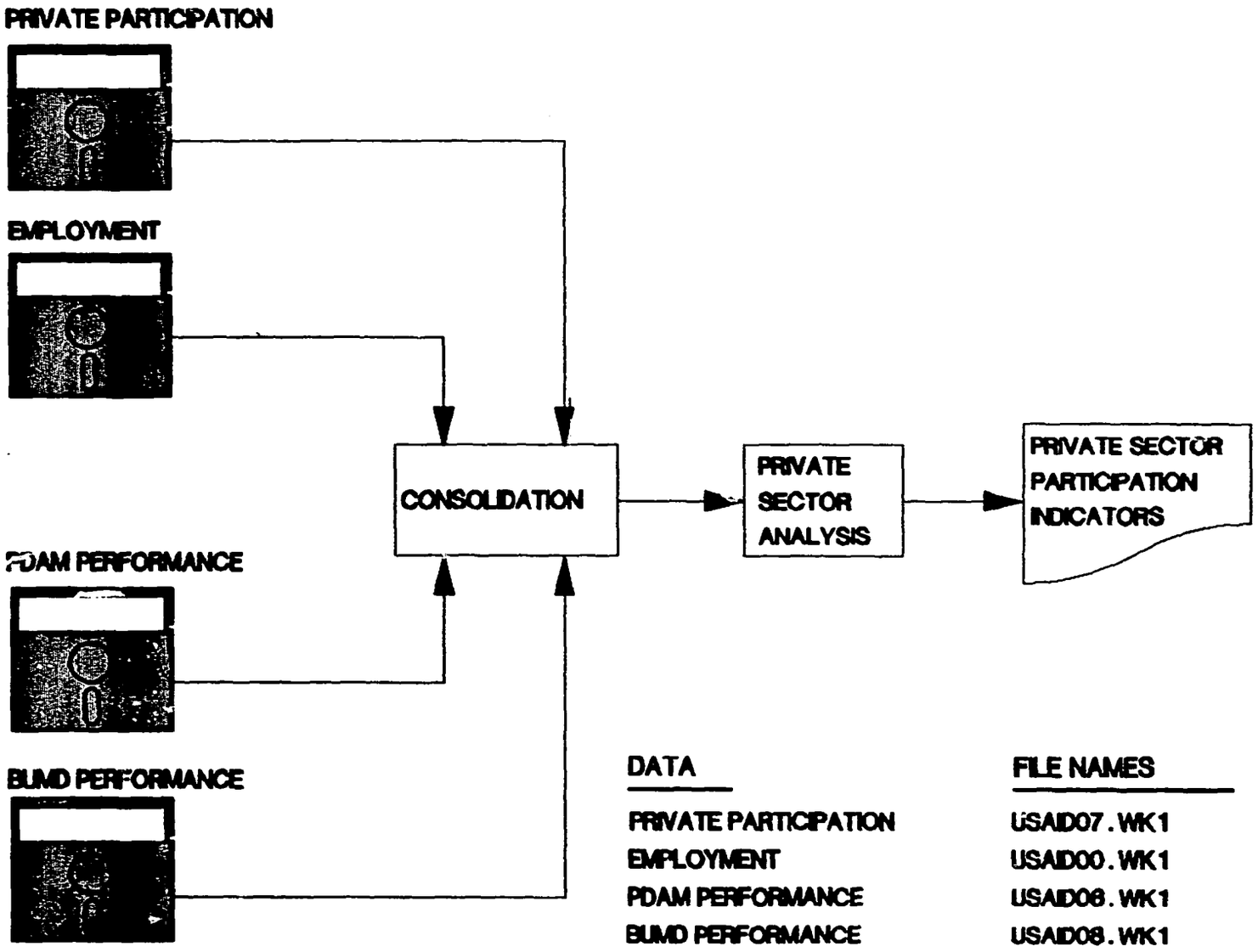

DATA	FILE NAMES
PRIVATE PARTICIPATION	USAID07.WK1
EMPLOYMENT	USAID00.WK1
PDAM PERFORMANCE	USAID06.WK1
BUMD PERFORMANCE	USAID08.WK1

URBAN SERVICE DELIVERY INDICATORS PROCESSING

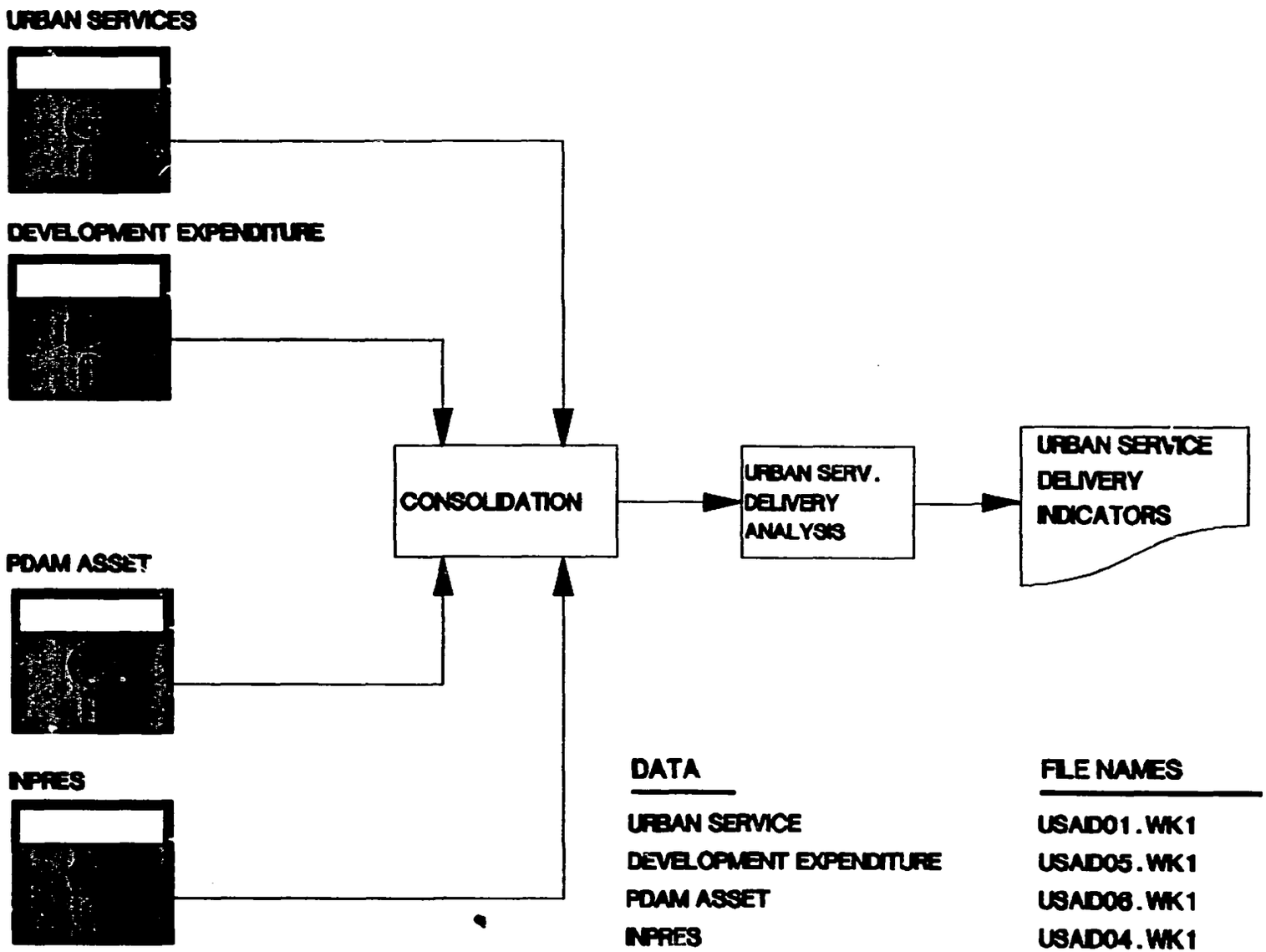

DATA	FILE NAMES
URBAN SERVICE	USAID01.WK1
DEVELOPMENT EXPENDITURE	USAID05.WK1
PDAM ASSET	USAID06.WK1
INPRES	USAID04.WK1

SHELTER INDICATORS PROCESSING

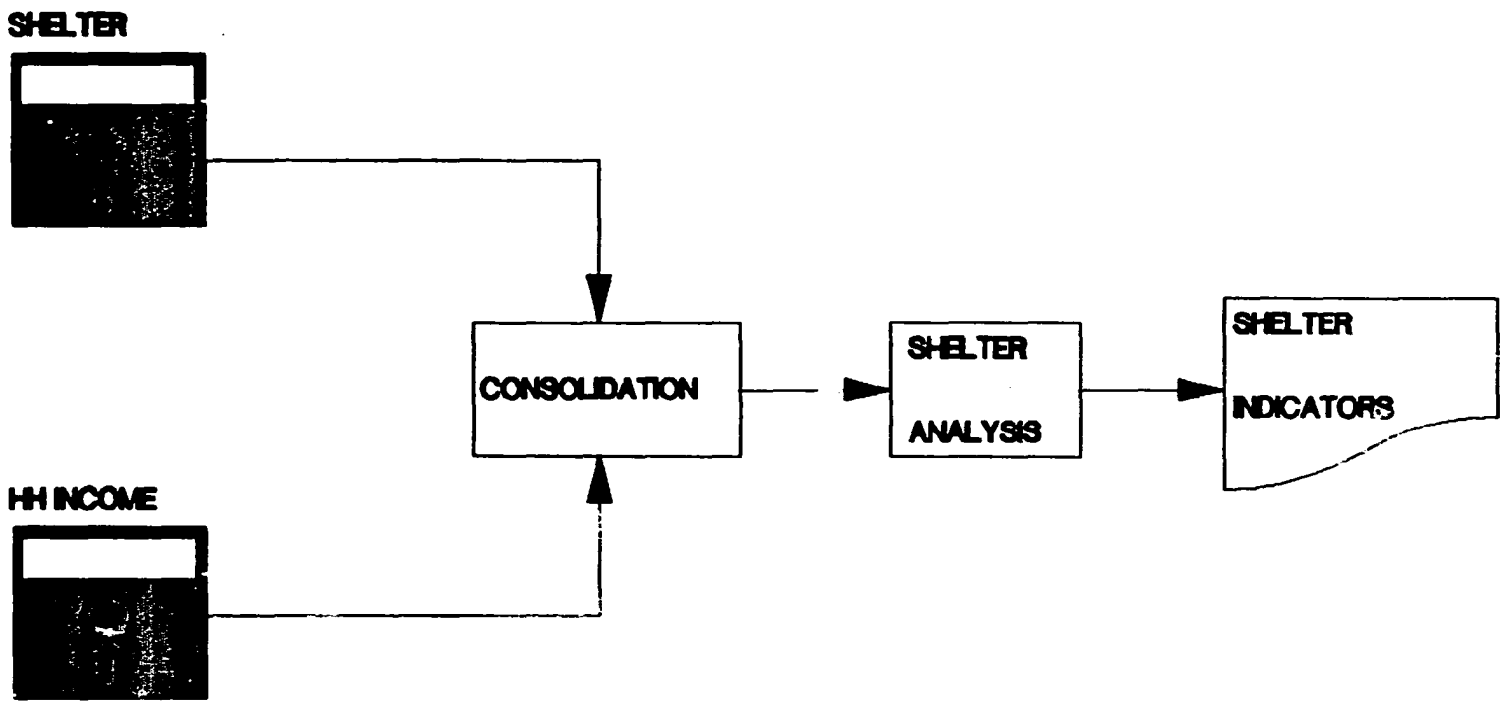

DATA	FILE NAMES
SHELTER	USAID02.WK1
HH INCOME	USAID00.WK1