PN-AAX-927

SREP
SUDAN RENEWABLE ENERGY PROJECT

NATIONAL COUNCIL FOR RESEARCH
ENERGY RESEARCH COUNCIL
SUDAN RENEWABLE ENERGY PROJECT

المجلس القومي للبحوث
مجلس ابحاث الطاقة
مشروع السودان للطاقة المتجددة

Improved Charcoal Stoves

(Canun ElDuça)

TRAINER'S MANUAL

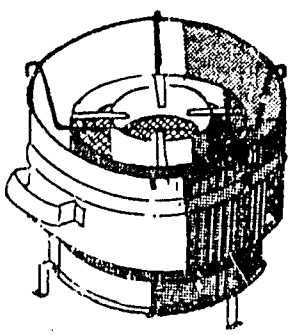

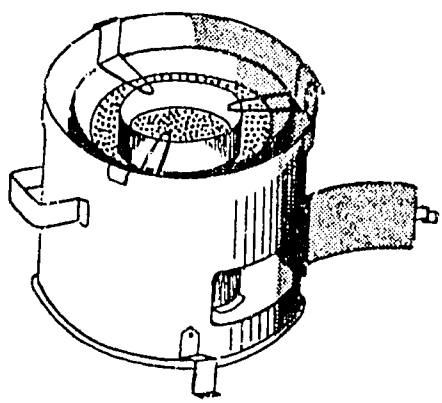

November 1984

TRAINER'S MANUAL

FOR

CANUN EL DUGA

Prepared by the Dissemination Unit:

Gaafar El Faki, Director
Somaya Suliman, Workshop Coordinator
Awatif Mahmoud
Fadia Majoub
El Tayeb El Bashir
Claudia Huff, Dissemination Consultant
Matthew Gamser, Energy Economist

Energy Research Council
Sudan Renewable Energy Project

November 1984

Table of Contents

Page No.

1. Introduction 4

2. Materials and Tools. 6

3. Tracing, Cutting, and Marking. 14
   - Open Draft Model 15
   - Controlled Draft Model 19
   - Firegrate. 23

4. Assembly Procedures. 27
   - Open Draft Frame Assembly. 29
   - Controlled Draft Frame Assembly. 33
   - Firegrate Assembly 37

5. Solo Production. 42

6. Mass Production. 44

7. Economics. 45

Appendices. 46
   - A: Training Design
   - B: Trainee's Manual, Open Draft Model (Arabic)
   - C: Trainee's Manual, Controlled Draft Model (Arabic)

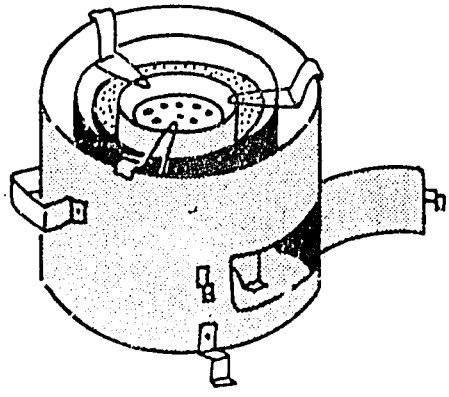

Controlled Draft Model

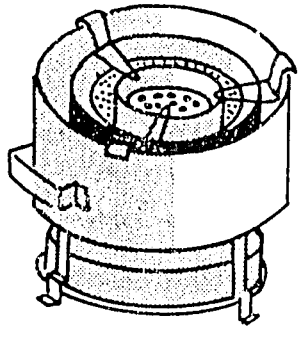

Open Draft Model

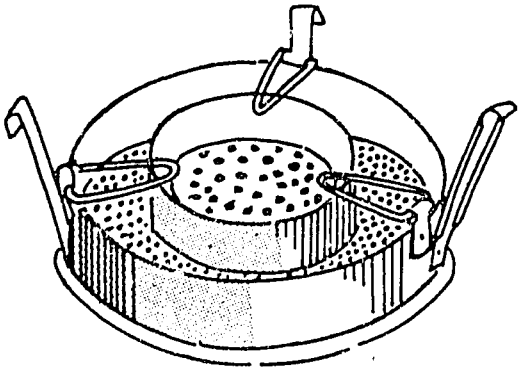

Firegrate

1. INTRODUCTION

In many parts of Sudan, consumers use charcoal produced a long distance away. The Khartoum area, for example, receives charcoal made 300-600 kilometers afield. Long distance transport is expensive, and results in heavily fractured charcoal. Canun el duga (stove for small charcoal pieces) was designed to address these two problems facing charcoal consumers.

Four basic features make canun el duga an improvement over the traditional charcoal cookstove:

- decreased charcoal consumption
- reduced cooking time
- ease-of-use
- small charcoal pieces, which are normally discarded, can be used.

The key aspect of canun el duga is the firegrate which consists of two compartments (see drawing at left). The inner compartment is for larger sized charcoal pieces and the outer compartment is for small charcoal pieces (duga) that cannot be used in traditional cookstoves. The outer compartment acts as a shield to minimize heat losses and the duga itself forms a very effective layer of insulation. When compared with the traditional Sudanese cookstove, canun el duga is 39% more efficient and generates savings of 0.78 kilograms of charcoal per day and about 24 piasters per day.

The improved designs for canun el duga, as presented in this manual, were developed as part of a charcoal stove project begun in 1979 as a joint effort of Khartoum University and Afhad College under the leadership of Dr. Y. H. Hamid. Since then, many organizations have helped in this work. When the Sudan Renewable Energy Project (SREP), under the auspices of the Energy Research Council, undertook to popularize the stove in 1983, laboratory and field tests had already confirmed the efficiency and acceptability of the new designs. Further testing led to refinement of the designs for use in a national stovemaking contest which was held in 1984. Contest winners received monetary awards and orders for stove production.

The Stovemaker's Training Workshop is designed to increase the number of artisans producing canun el duga using the production materials and methods that have so far proved most effective. This does not mean, however, that further improvements are not anticipated. On the contrary, it is expected that artisans will make suggestions for improving both the design and the production methods. These suggestions are welcome and should be communicated to the SREP staff in Khartoum.

Similarly, the manual itself is presented as an initial effort. The training program is designed for artisans who are already familiar with the basic metalworking techniques and so these processes are only presented in outline form. Suggestions for improvements to the manual are also welcome.

2. MATERIALS AND TOOLS

Almost all traditional charcoal stoves in Sudan are made from scrap metal. Scrap is the preferred material for canun el duga, also.

Possible sources for scrap metal include wrecked automobiles, metal factory waste, and old oil drums. Canun el duga require somewhat stronger metal for some parts than do traditional stoves, and the artisan will soon discover which sources suit his construction needs best.

New sheet metal can be used, but while shiny new sheet presents a nice appearance in markets, new materials are costly. The artisan should be able to achieve an attractive appearance at lower cost through painting or polishing scrap metal.

Some quarter-inch round steel bar is also needed for the pot-rests, and can be used for handles, legs, and even for grate supports if welding equipment is available (see pages 9-11 for parts identification). Only short lengths are needed so artisans should have no trouble finding tail ends and other scrap sources of bar at markets and other workshops.

All the tools needed to make canun el duga are either already in the artisan's workshop, or are readily made there by the artisan himself. The tools and their uses are described below.

1. Ballpein hammers and wooden mallet

These are used to shape and fold the metal into the various forms required. Different weights are needed for light and heavy gauge metals (½ and 1½ pound).

2. Cold chisel

This is used for cutting steel bar segments and heavy gauge scrap metal pieces.

3. Tin snips

These are used for cutting lighter gauges of metal.

4. Punches

The artisan hammers these into the metal which forms the base of the firegrate to make the holes. A 7.5 mm punch makes the small duga holes in the outer compartment. A 15 mm punch is used to make the larger holes in the center. A 1-1½ mm punch is used to make tiny holes for rivetting.

5. Scriber

This is a piece of hacksaw blade used for making lines in the metal before cutting.

6. Rail

This is one of the most important tools for shaping metal. Many stovemaking operations are done on it: cutting, folding, rivetting, and flattening. A good, heavy rail is the base upon which the artisan works.

7. Snup

This tool is used for hammering rivets into metal. It has a 1.5 mm hole on one end, through which the rivet passes. Some artisans use certain sized nuts in place of snups.

TOOLS

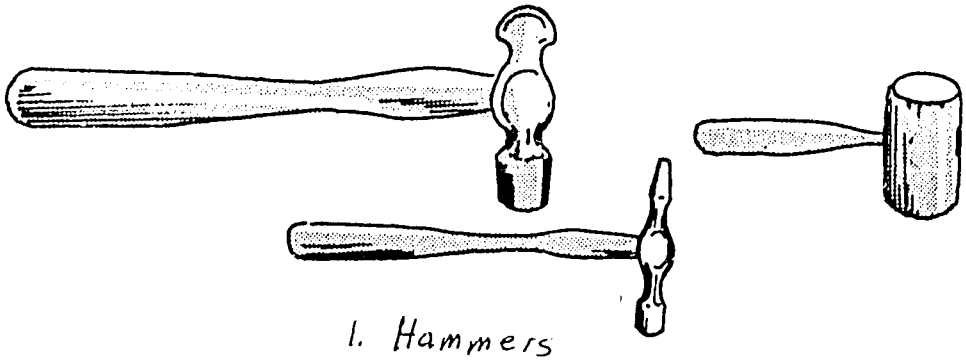

1. Hammers

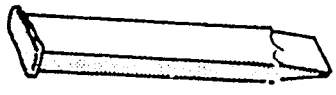

2. Cold Chisel

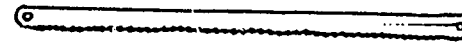

5. Scriber

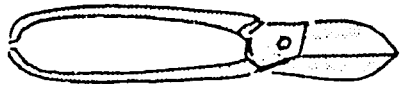

3. Tin Snips

7. Snup

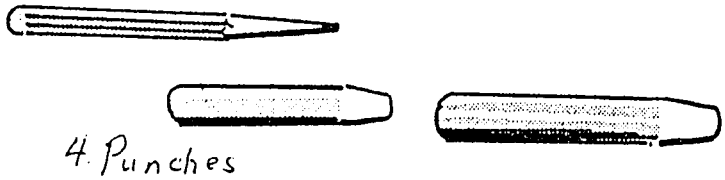

4. Punches

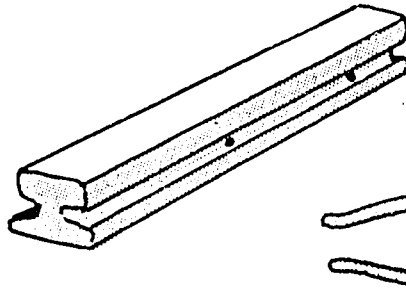

6. Rail

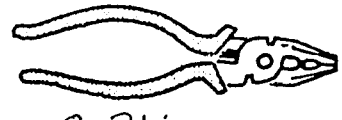

8. Pliers

9. Shinkar

8. Pliers

These are used for bending metal and tightening joints, as well as removing pieces of metal punched from the base of the firegrate.

9. Shinkar

This tool is used for marking fold lines on both round and square pieces of metal. One point will mark ½ cm in from the edge (for folds), and the other point will mark 1 cm in (for lock-seams).

The following tools are not essential for stove assembly, but some artisans find them very useful:

Compass ("Dawran"), Ruler and Measuring Tape -- If templates are used to measure all stove components, these are not necessary. Most artisans already have them around, anyway. But tracing from a template is generally much faster, and more accurate, than measuring each new piece.

Anvil -- This can be used for rolling metal into the cylindrical shapes needed for canun el duga.

Groover -- This can be used to produce patterns in the stove metal that enhance appearance. Jamal Sharbaak, the first prize winner in the SREP Stovemaking Contest, uses this tool very well.

These tools are used to shape the metal into the various pieces of canun el duga. The various pieces for the open draft frame, the controlled draft frame, and the firegrate are illustrated on the following pages.

Open Draft Frame:

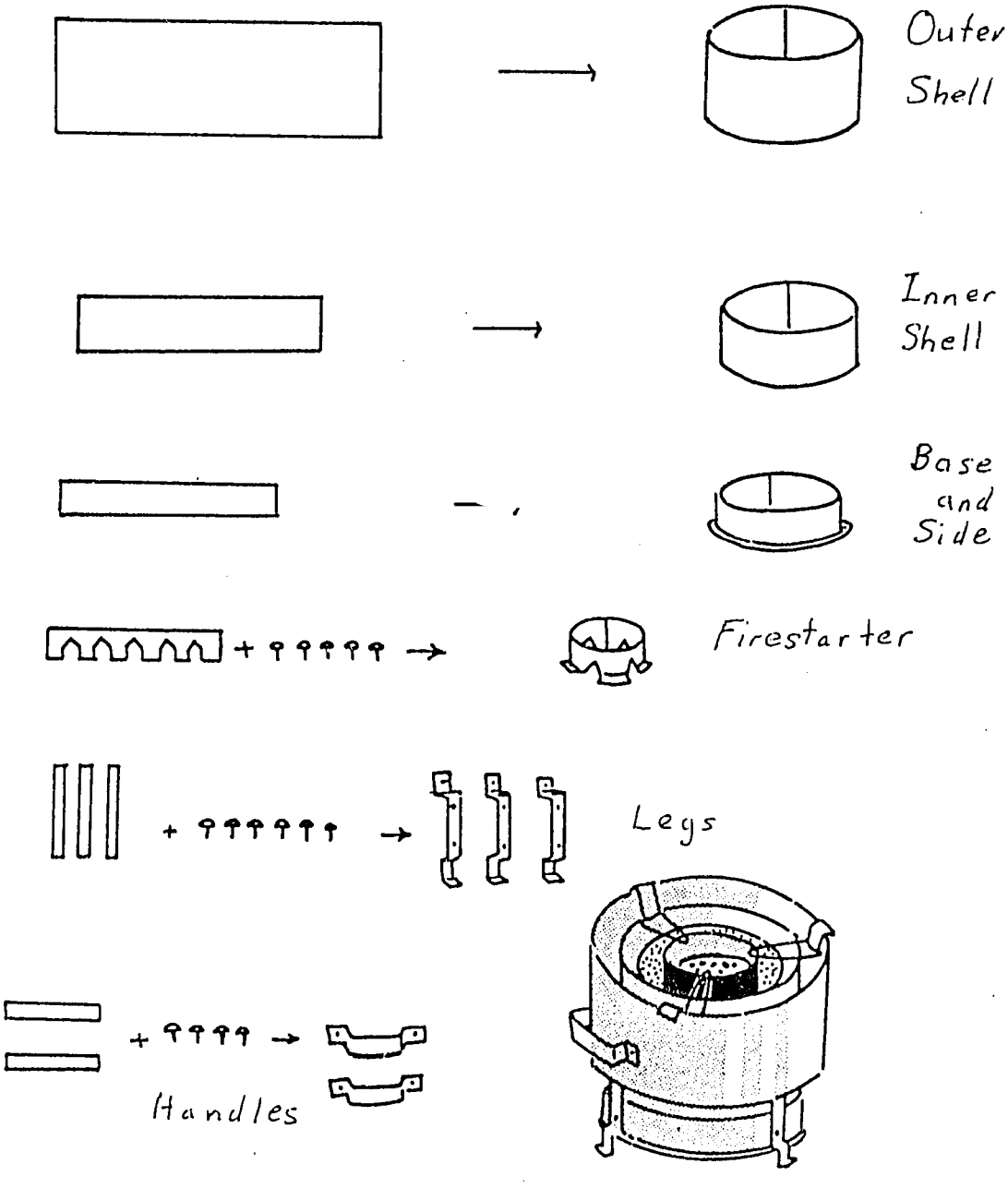

Controlled Draft Frame:

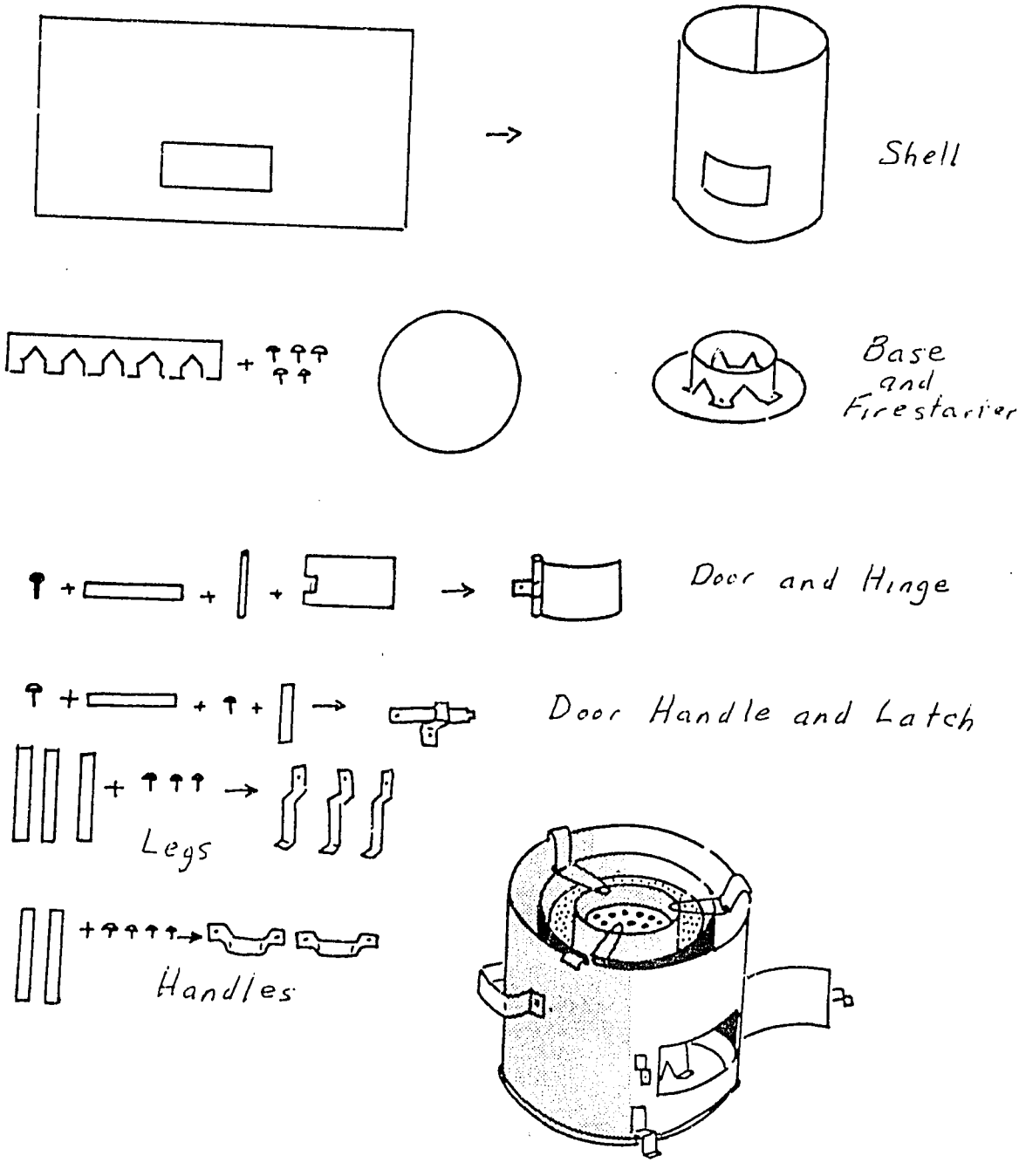

Firegrate:

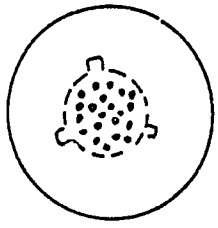

Grate Base

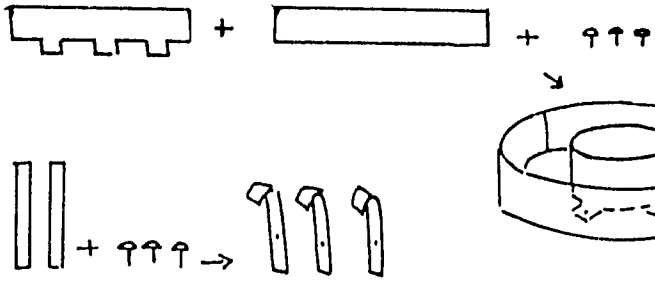

Grate Side and Center

Supports

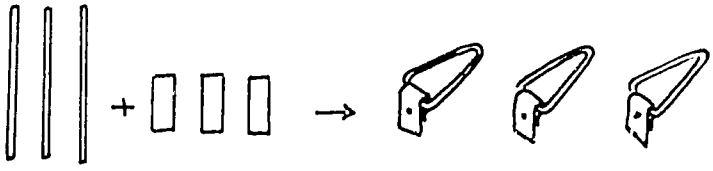

Pot-Rests and Flaps

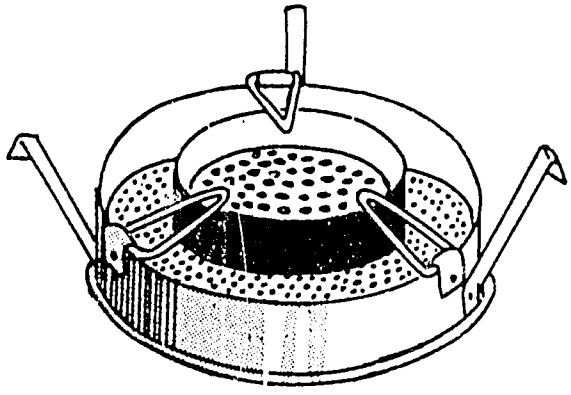

3. TRACING, CUTTING, AND MARKING

Both canun el duga designs consist of a frame and a firegrate. The frames of the controlled draft and open draft model are different, but the firegrates are identical.

In order to make good quality stoves time after time, it is essential to accurately measure and cut all their components. Even the most skillful artisan will occasionally make errors if each piece is measured with compass, ruler and measuring tape. However, if the artisan prepares each new piece by tracing it from a perfect old one, it will be properly sized every time. The piece used for this tracing process is called a template. Canun el duga can be produced far more quickly and accurately by using templates. If you make templates, you might want to paint them a special color so you won't be tempted to use them in stove construction.

Open Draft Model

Shells: The open draft stove has an outer shell (1) and an inner shell (2). Both are cylindrical and are traced from rectangular templates. The dotted lines represent fold lines made with a shinkar as shown in the shaded box.

Base: The base is formed from a circular piece of metal (3) and a rectangular piece (4) which forms the side. The fold lines are marked with a shinkar as shown in the shaded box.

1.

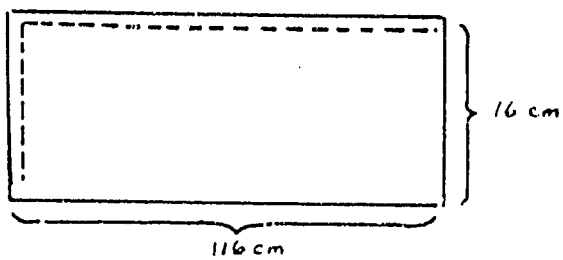

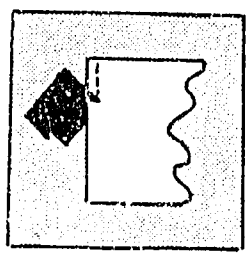

2.

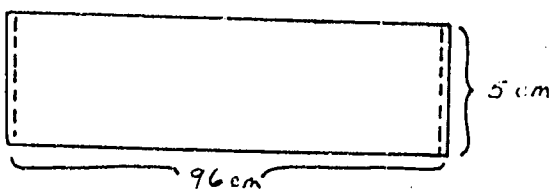

3.

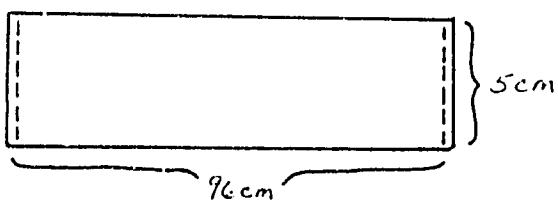

4.

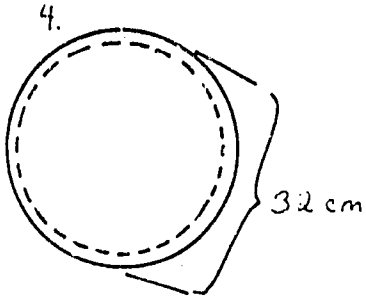

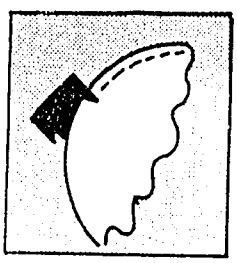

Fire-starter: The fire-starter is traced from a rectangular template with cut-outs (5). The fold lines on the ends are marked with a shinkar.

Legs: The three legs are traced from a rectangular template (6). The fold lines are marked with a shinkar.

Handles: The two handles are traced from a rectangular template (7). The fold lines are marked with a shinkar.

5.

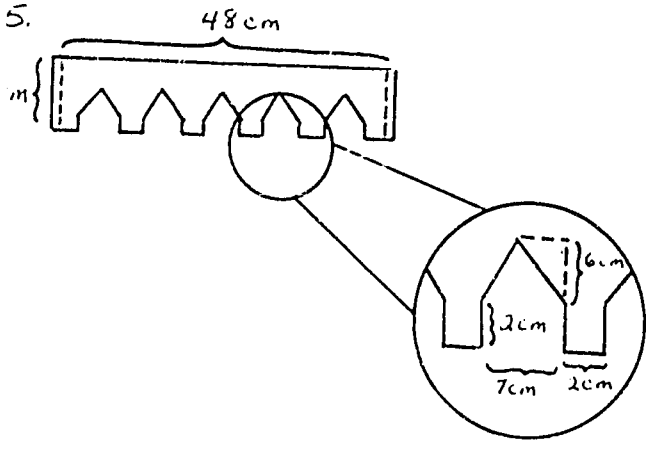

6.

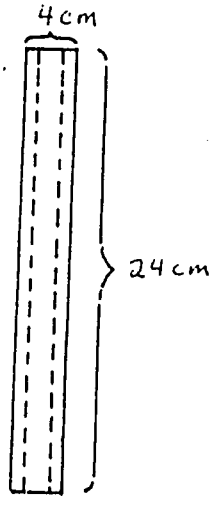

7.

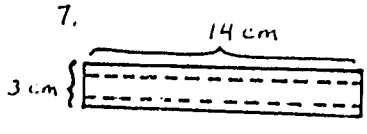

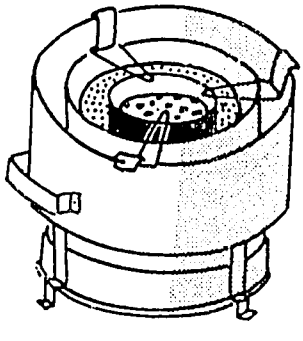

Controlled Draft Model

Shell: The controlled draft stove has a simple one-cylinder shell, made from a rectangular piece of metal with the door cut out (1). The dotted lines represent fold marks made with the shinkar as shown in the shaded box.

Base: The base for this model is a circular piece of metal (2). The fold lines are marked with a shinkar as shown in the shaded box.

Fire-starter: The fire-starter is cut from a rectangular template with cut-outs (3). The fold lines on the ends are marked with a shinkar.

1.

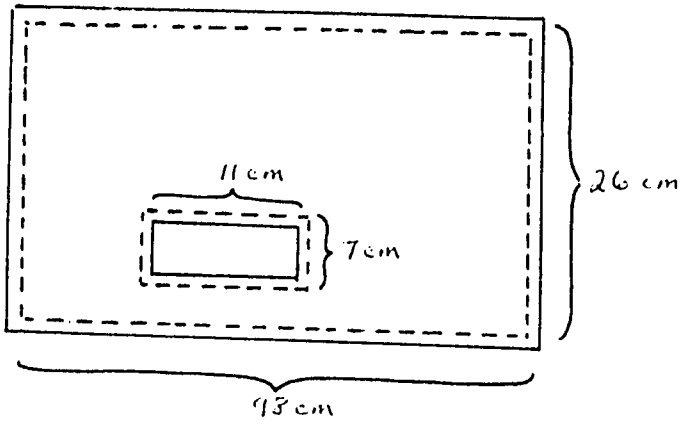

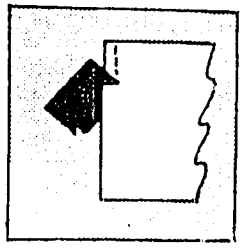

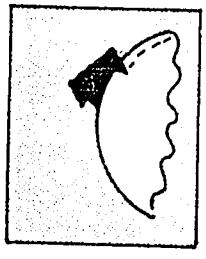

2.

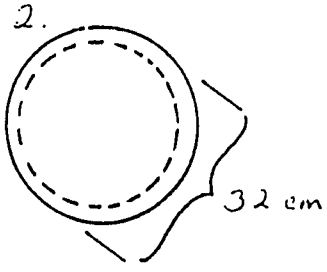

3.

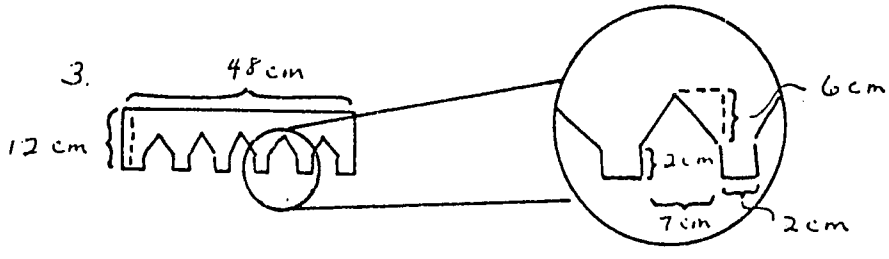

Door: The door is cut from a rectangular piece of metal large enough to cover the opening on the shell (4). It includes two flaps which will be used to wrap around the door hinge as shown in the shaded box.

Door hinge and flap: The door hinge is cut from a short piece of metal rod (5). A flap (6) will be folded around the middle of the hinge and attached to the shell.

Door handle and latch: These two pieces are traced from rectangular templates as shown (7 and 8).

Legs: The three legs are traced from a rectangular template (9). The fold lines are marked with a shinkar.

Handles: The two handles are traced from a rectangular template (10). The fold lines are marked with a shinkar.

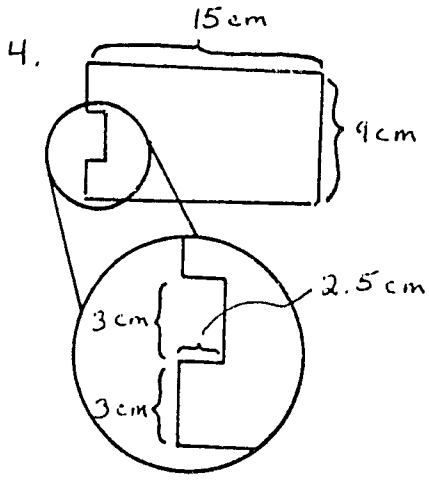
4.
15cm
9cm
2.5cm
3cm
3cm

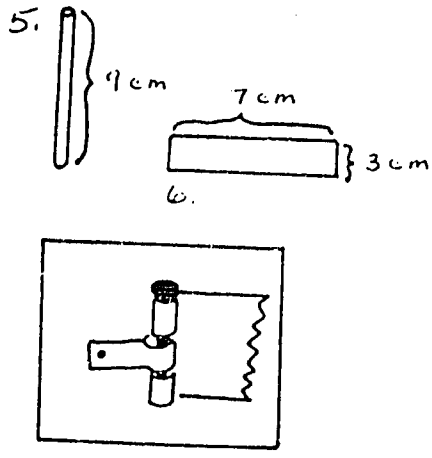
5.
9cm
7cm
3cm
6.

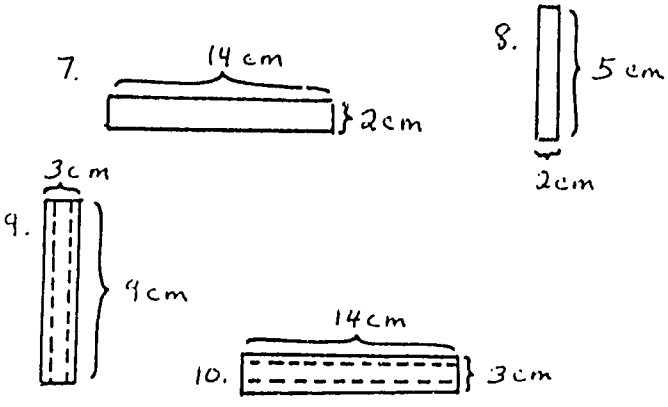
7.
14cm
2cm
8.
5cm
2cm
3cm
9.
9cm
14cm
10.
3cm

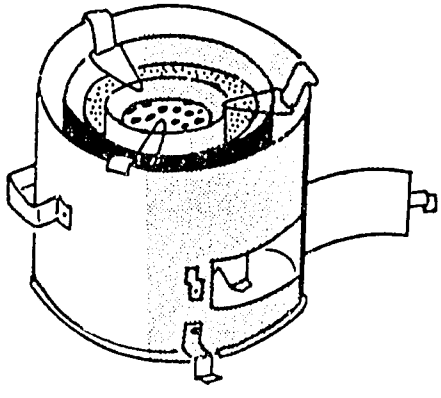

Firegrate

Base: The firegrate base is traced from a round template (1). The dotted lines represent fold marks made with the shinkar as shown in the shaded box. In addition, another circular template (2) is used to mark the edge of the inner compartment and the space to be left un-punched for subsequent rivetting of the center cylinder.

Side and Center: These pieces are traced from rectangular templates. The side is a simple rectangle (3) while the center has three flaps for attachment to the base (4). The fold lines are marked using a shinkar.

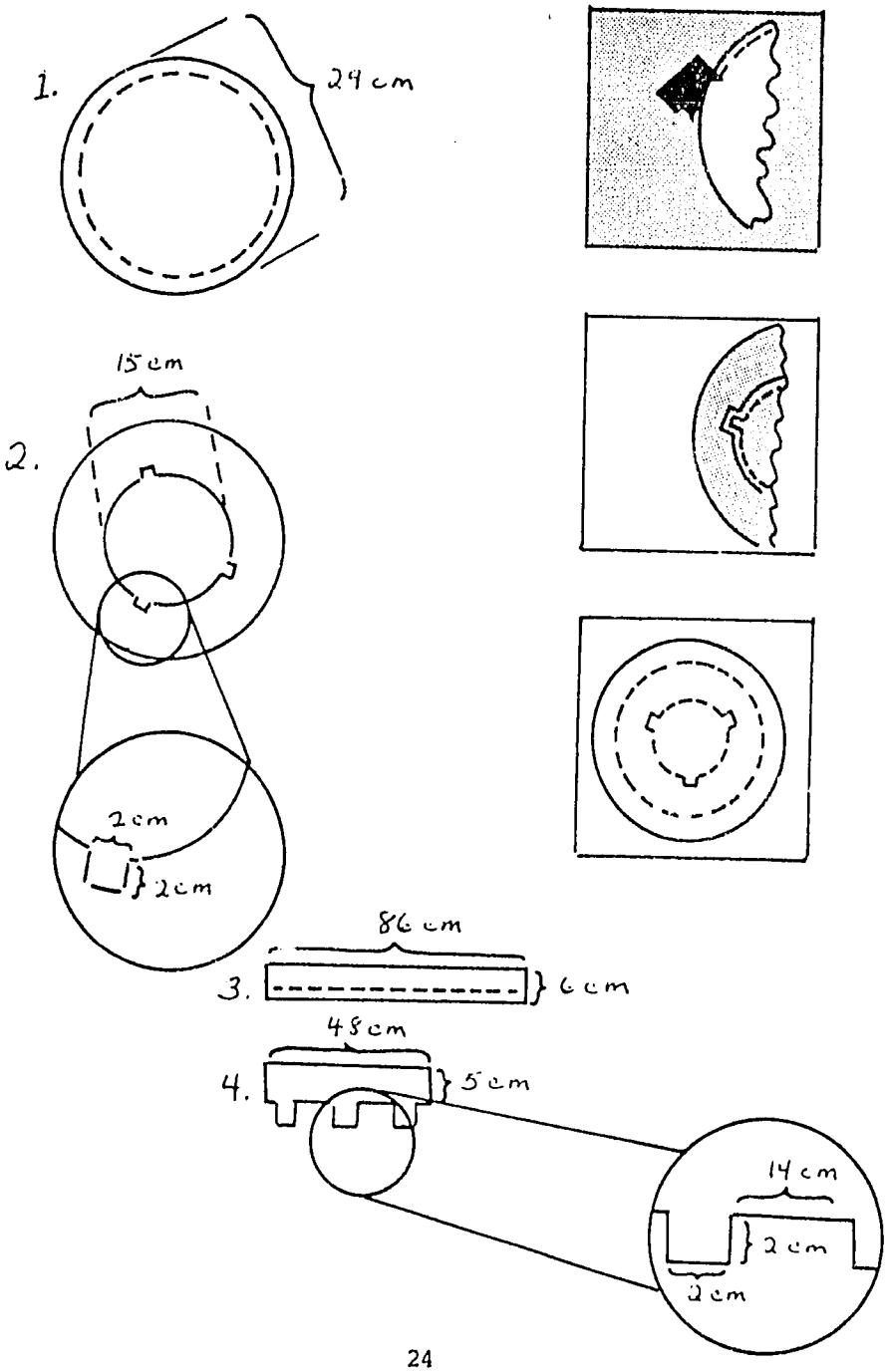
1.
24 cm
2.
15 cm
2 cm
2 cm
3.
86 cm
6 cm
4.
48 cm
5 cm
14 cm
2 cm
2 cm

Pot-rests and flaps: The three pot-rests are cut from metal rods using the template shown (5). The flaps which will secure the pot-rests to the side are traced from a rectangular template (6).

Supports: The three supports are cut from a rectangular template (7).

5.

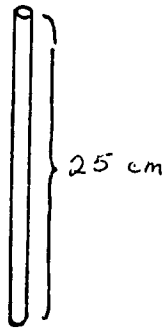

6.

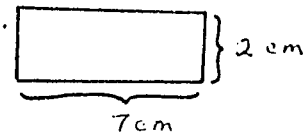

7.

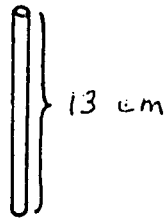

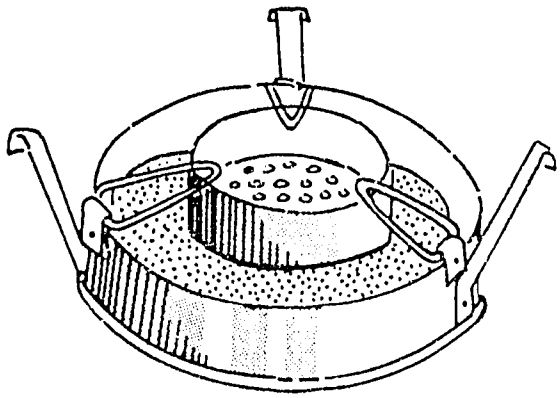

4. ASSEMBLY PROCEDURES

Now that all the proper tools have been gathered, the materials have been traced and cut using templates, and all fold marks have been made, the next step is assembly of canun el duga.

But first, a brief review of some of the required processes.

Folding is a process by which the edges of metal that will be handled by stove users is made smooth to the touch. It is accomplished by first bending the edge over, then bending it over again and pounding it until flat (see illustration at right).

Lock-seams are a means of firmly attaching two metal edges. An edge is first bent outward and then inward. Then two edges prepared in this way are joined and pounded flat (see illustration).

A modified lock-seam is used to join horizontal and vertical pieces. One edge is flared out and the other edge is bent upwards and inwards. The seam is then pounded flat (see illustration).

Before proceeding to assembly, you may want to review the names of all the pieces as given in Chapter 2, "Materials and Tools."

Assembly of the open draft frame, the controlled draft frame, and the firegrate is depicted in step-by-step fashion, with illustrations and notes for each step. Be sure to read the notes carefully since they contain important information which cannot be adequately illustrated.

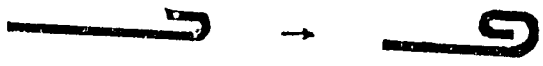

Folds

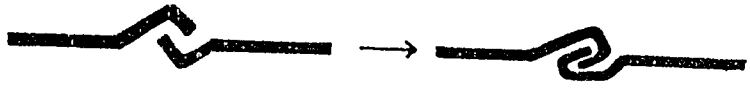

Lock-Seams

Modified Lock-Seams

Open Draft Frame Assembly

Step 1: Forming the side of the base.

- Use a lock-seam to form the outer rim of the base.
- Bend the bottom edge of this in preparation for a modified lock-seam.

Step 2: Completing the base by adding the bottom.

- Bend the outer edge of the circular portion of the base in preparation for a modified lock-seam.
- Attach the side to this using a modified lock-seam.

Step 3: Forming the fire-starter.

- Use a lock-seam to prepare the fire-starter.
- Bend the bottom flaps up so that the fire-starter will rest flat on the base.

Step 4: Rivetting the fire-starter to the base.

- Be sure the fire-starter is centered in the middle of the base.
- Attach the fire-starter to the base using rivets.

Step 5: Forming the outer shell.

- Fold the top edge of the outer shell inwards so that it is smooth to the touch.
- Use a lock-seam to form the outer shell.

Step 6: Forming the inner shell.

- Use a lock-seam to form the inner shell.

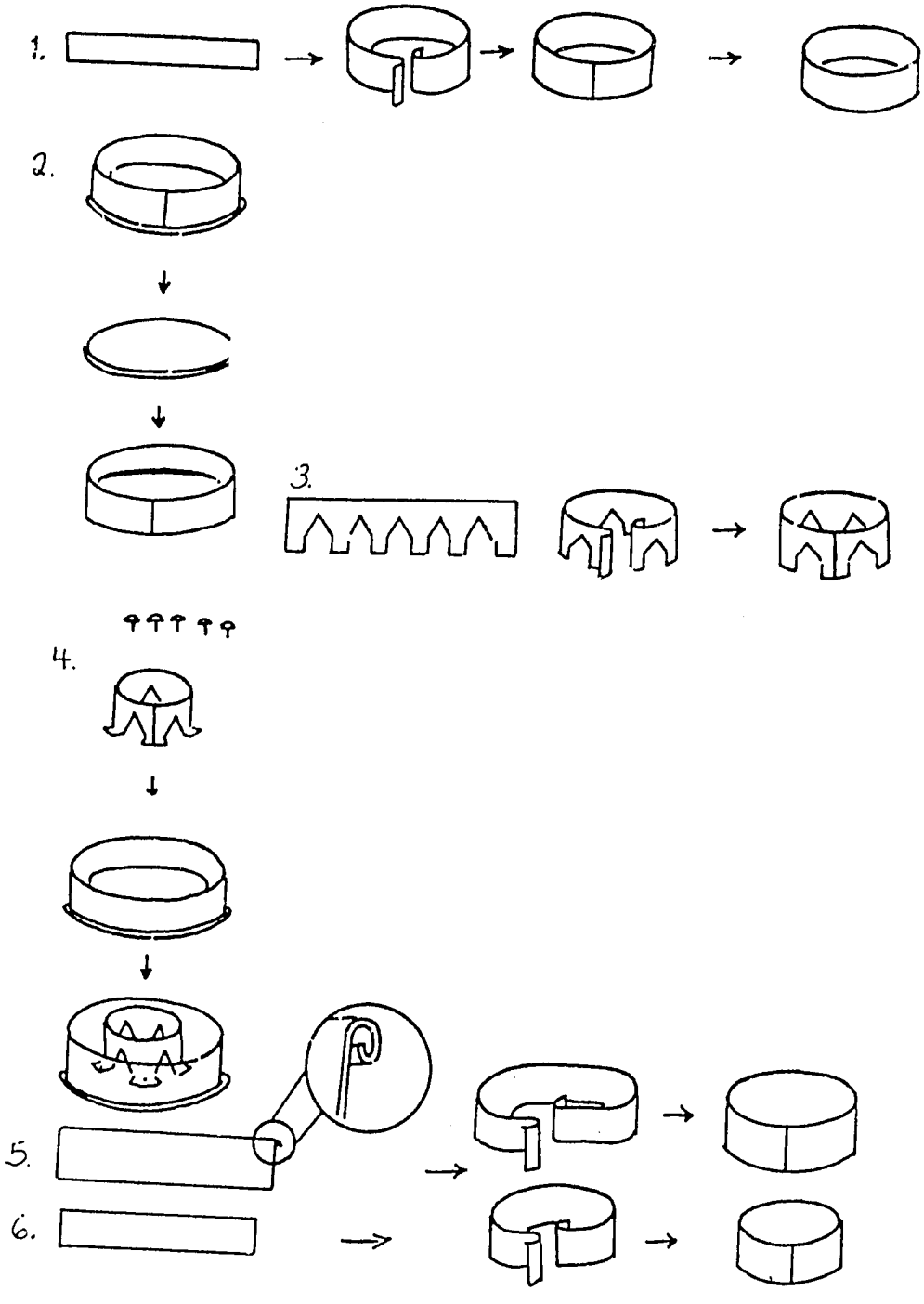
1.
2.
3.
4.
5.
6.

7.

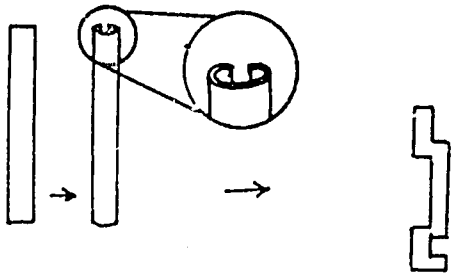

8.

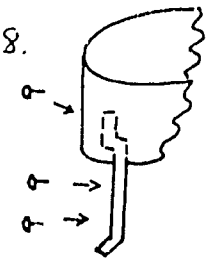

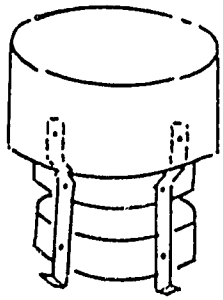

9.

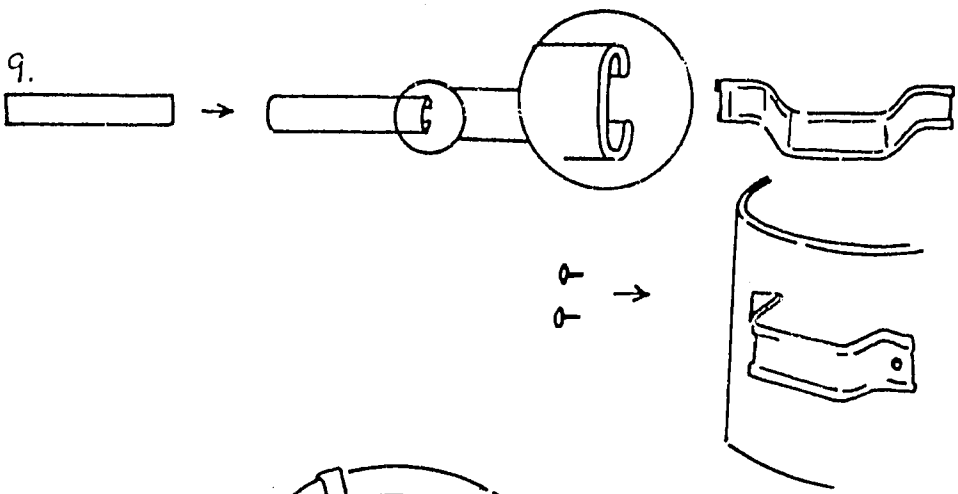

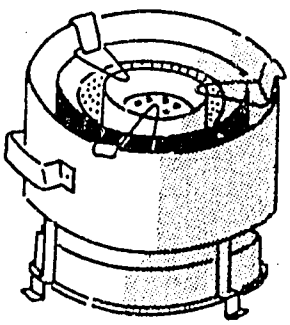

Step 7: Forming the legs.

- Fold the longer edges of the legs to strengthen them.
- Bend the legs as shown.

Step 8: Attaching the legs.

- Use rivets to attach the legs to the base.
- Use rivets to attach the legs to the inner shell.
- Use rivets to attach the legs to the outer shell.

Step 9: Attaching the handles.

- Fold the longer edges of the handles so that they are smooth to the touch.
- Bend the handles as illustrated.
- Use rivets to attach the handles to the outer shell.

Controlled Draft Frame Assembly

Step 1: Forming the fire-starter.

- Use a lock-seam to prepare the fire-starter.
- Bend the bottom flaps up so that the fire-starter will rest flat on the base.

Step 2: Attaching the fire-starter to the base.

- Be sure the fire-starter is centered in the middle of the base.
- Attach the fire-starter to the base using rivets.

Step 3: Forming the shell.

- Fold the top edge of the shell inwards so that it is smooth to the touch.
- Fold the edges of the door opening back by first slicing the corners as illustrated and then flattening the flaps inward.
- Form the shell by using a lock-seam.

Step 4: Forming the hinged door.

- Wrap a metal strip around the center of the metal rod.
- Wrap the two flaps of the door around the top and bottom of the metal rod.

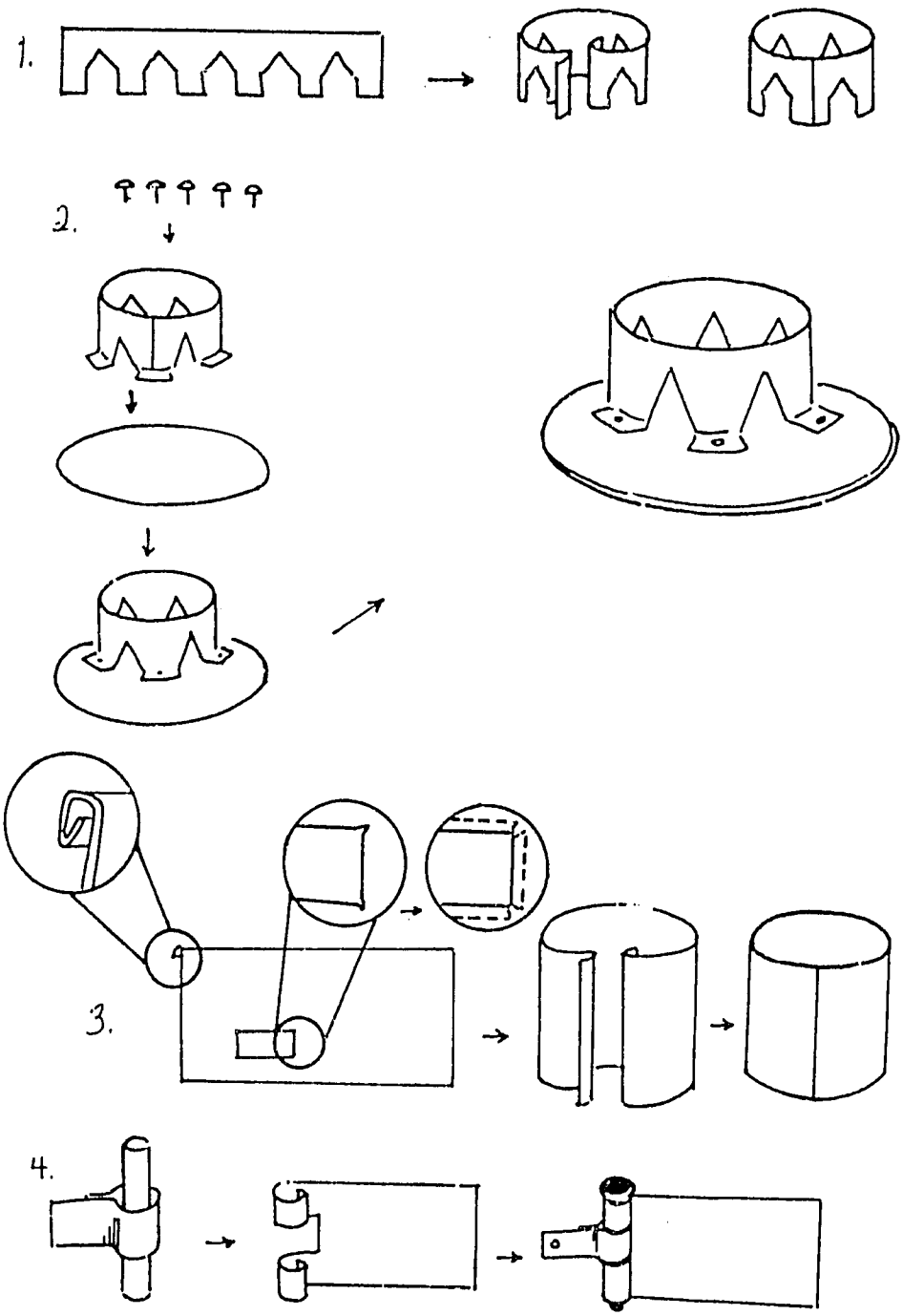
1.
2.
3.
4.

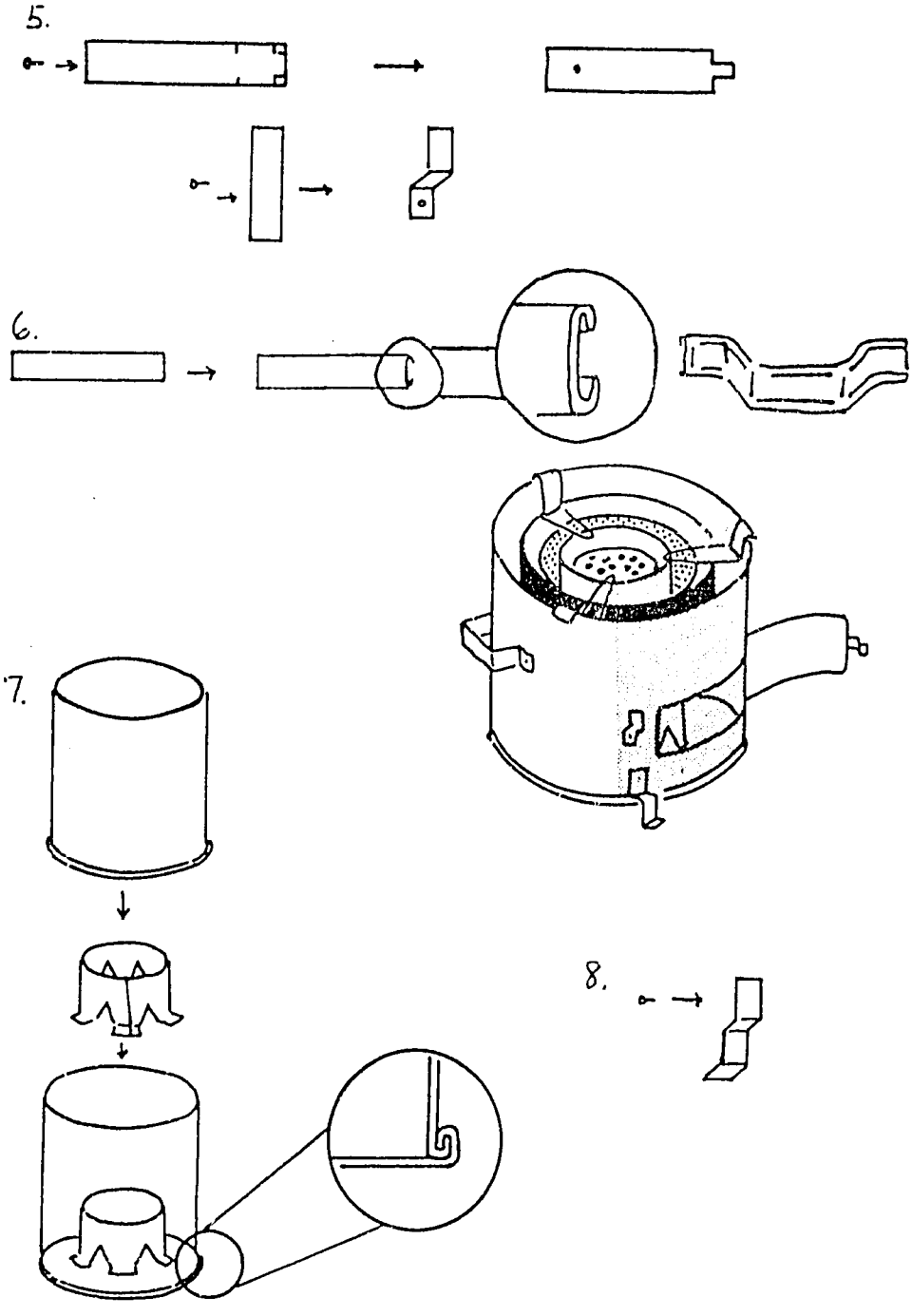
5.
6.
7.
8.

Step 5: Preparing and attaching the door handle and latch.

- Snip and fold back one of the short ends of the door handle so that it is smooth to the touch.
- Fold that end outward so that it can be easily grasped.
- Bend the latch piece outward so that the handle will easily fit behind it.
- Rivet the latch to the shell beside the door opening.
- Rivet the handle to the door.
- Rivet the door hinge flap to the shell so that the door opening is covered and the handle fits behind the latch.

Step 6: Preparing and attaching the handles.

- Fold the longer edges of the handles so that they are smooth to the touch.
- Bend the handles as illustrated.
- Use rivets to attach the handles to the shell.

Step 7. Attaching the shell to the base.

- Prepare the bottom edge of the shell for a modified lock-seam by bending it upwards.
- Bend the outer edge of the base upwards in preparation for a modified lock-seam.
- Attach the shell to the base using a modified lock-seam.

Step 8. Preparing and attaching the legs.

- Bend the leg pieces as illustrated.
- Rivet the legs to the shell.

Firegrate Assembly:

Step 1: Punching the grate base.

- Holes in the center portion of the firegrate base are made with the 15 mm punch, and the holes on the outer portion are made with the 7.5 mm punch.
- In the center, holes are first punched in a straight line, about 1.5 cm apart. Next, holes are punched on either side of the first row. These holes are located mid-way between two holes in the initial row and about 1.5 cm to the side.
- This pattern is repeated until the center portion is filled with holes as illustrated.
- Holes in the outer portion are punched in a fan-like pattern radiating from the center.
- Three areas are left unpunched for subsequent rivetting of the grate center. The outer circumference is also left unpunched for subsequent attachment to the grate side.

Step 2: Preparing the grate side and the grate center.

- The grate side is formed using a lock-seam.
- The grate center is formed using a lock-seam.

Step 3: Attaching the grate center to the punched base.

- The flaps on the bottom of the grate center are bent upwards so that it will rest flat on the punched base.
- The grate center is rivetted to the base at the three unpunched areas.

Step 4: Attaching the grate side to the punched base.

- The bottom edge of the grate side is flared out and up in preparation for a modified lock-seam.
- The outer circumference of the grate base is flared up and then curled inwards in preparation for a modified lock-seam.
- These two edges are then hooked together and pounded flat to form the modified lock-seam.

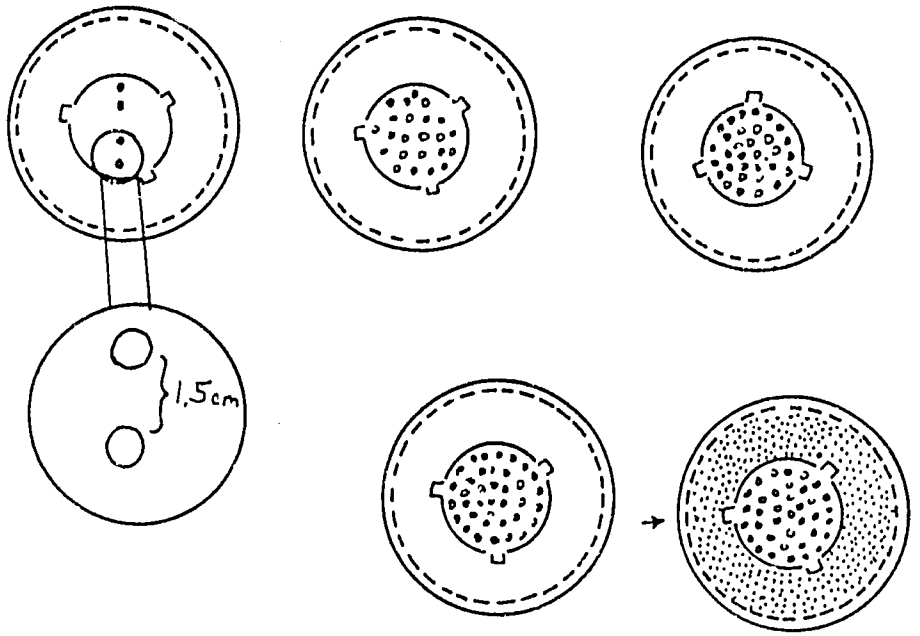
1.5cm

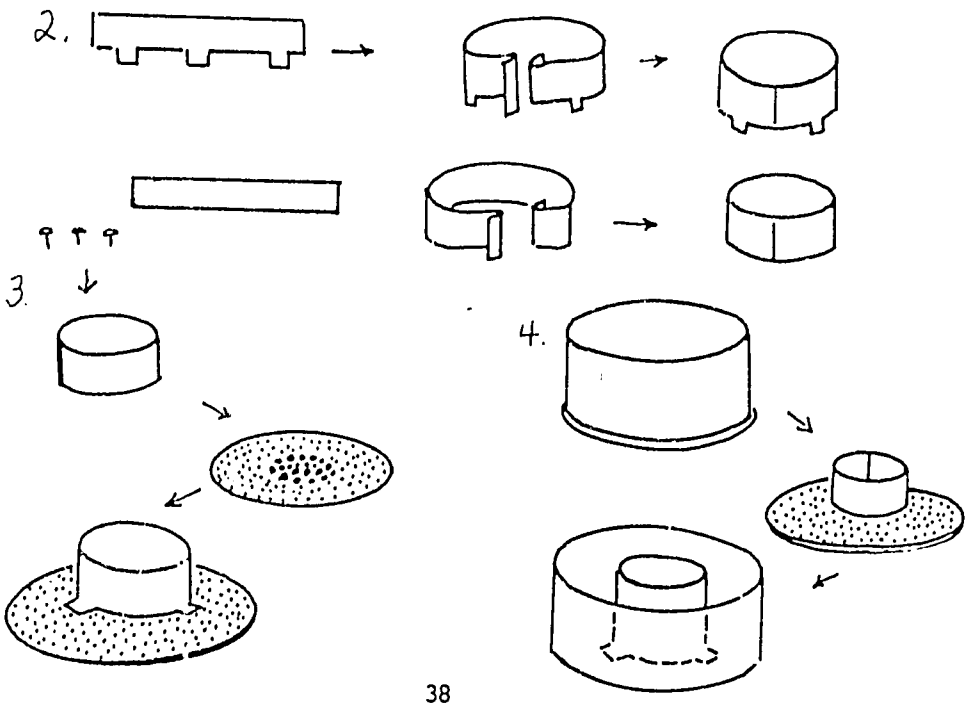
2.
3.
4.

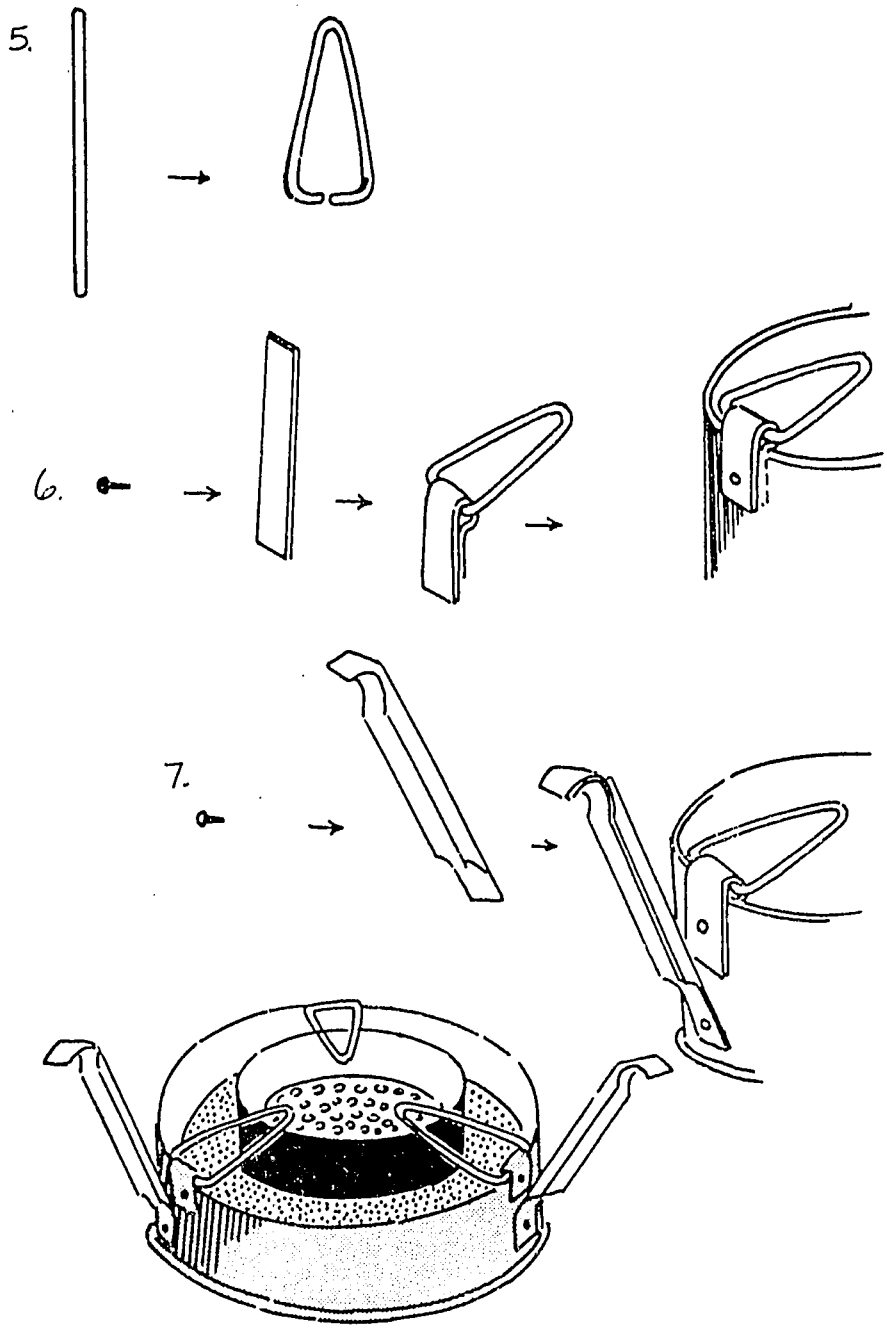
5.
6.
7.

Step 5: Forming the pot-rests.

- The three pot-rests are prepared by bending pieces of metal rod into the shape illustrated.
- The length of the formed pot-rest must be sufficient to extend from the grate side nearly to the center of the firegrate.

Step 6: Attaching the pot-rests.

- The pot-rest flaps are folded over the open ends of the pot-rests as illustrated.
- The flap is then placed over the top edge of the grate side and rivetted in place. Be sure that the fit is not too tight since the pot-rests must be moved up and down when filling the grate with charcoal.
- The three pot-rests should be located equidistant from each other on the grate side.

Step 7: Attaching the grate supports.

- The three grate supports are arched by pounding.
- They are then rivetted to the grate side, just below the pot-rests.

5. SOLO PRODUCTION

This last step of training is the most important one. It lets the artisan put all that has been learned together in making a canun el duga from start to finish without supervision. The trainer should try to observe with as little comment as possible, in order to see what lessons were learned well, and what problems or questions remain to be addressed.

Each artisan should be handed a batch of scrap material sufficient to make slightly more than one stove. Be careful not to provide too much material, because if cutting is not performed efficiently the leftover metal may be wasted. Then the artisans must use their tools and templates to cut and shape the scrap into useful forms for canun el duga assembly, before completing the assembly and finishing process.

Each artisan should sign or otherwise decorate the finished canun el duga so that the trainer can identify it. All the finished stoves should be placed together for group review and comments. This provides a good opportunity for the trainer to field any remaining questions as well as to elicit suggestions from the artisans on how the basic designs can be further improved. Perhaps a small prize could be awarded for the best canun el duga produced in the workshop.

Mass Production Schemes

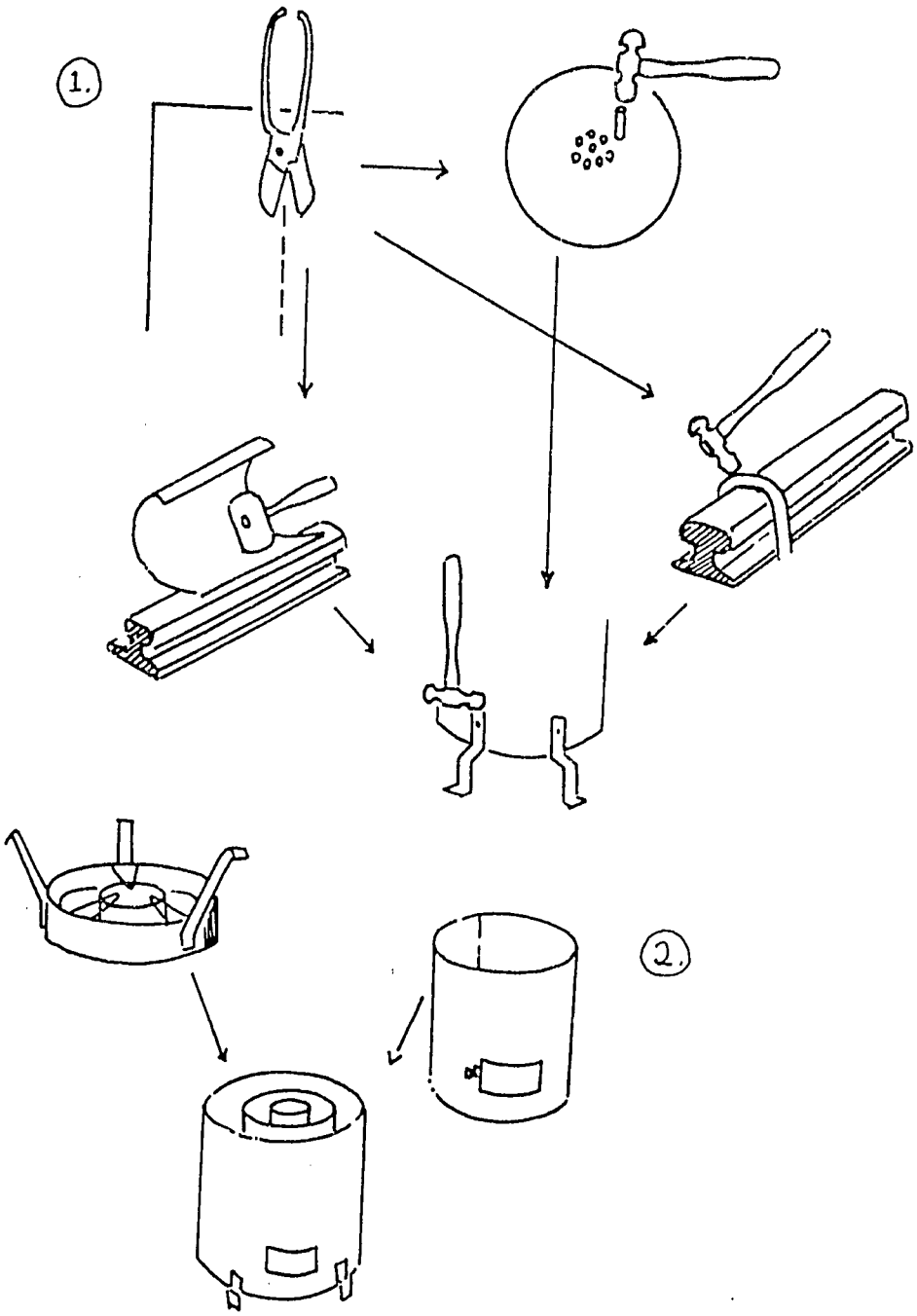

6. MASS PRODUCTION

Most traditional stoves in Sudan are made by one person who collects the scrap materials, then cuts, folds, and assembles the pieces into finished products. Canun el duga can also be made in this way.

However, if a group of artisans is formed, they usually find that they can produce stoves more quickly and efficiently by dividing the production process into several tasks and working together to make the finished products. This is called a mass production process.

Mass production of canun el duga can be organized in several different ways. The production process could be divided into five steps:

1 - tracing and cutting
2 - grate punching
3 - folding and lock-seaming
4 - bending and forming
5 - assembly, rivetting, and finishing

A group of five artisans might decide to make one person responsible for each of these tasks. The tracer/cutter would hand the cut pieces to the grate puncher, the folder/lock-seamer, and the bender/former. They, in turn, would pass their finished pieces to the rivetter/finisher.

Another way to organize mass production for canun el duga would be to have one artisan make grates, one make frames, and one do painting and finishing.

There are many other possibilities for dividing stove construction to allow mass production. It is up to the artisans themselves to determine which organization method best suits their needs and skills.

7. ECONOMICS

The production and sale prices of canun el duga will depend on the individual situation of each workplace and artisan. Raw materials can have very different costs from place to place. Artisan time also has a price that varies depending on the individual and his experience. The production system itself can have different costs. The economics of a workshop of five artisans making twenty stoves a day through mass production are not those of a single artisan making two stoves per day sitting under a tree.

Although different workshops and artisans will have different canun el duga costs, all should find that these stoves are more expensive than the traditional canun. This is because more material and assembly is required to make canun el duga. Thus, to reflect this higher production cost, the price of canun el duga in the market will have to be higher than that of a traditional stove.

Why should consumers be willing to buy canun el duga for a higher price? Because, over time, it will save them money by using less charcoal than the traditional canun. The consumer will not have to throw away the duga that makes up a large part of the charcoal sack (20% to 30% in Khartoum). Since less charcoal is needed to cook meals, canun el duga wastes less heat that a traditional cookstove. SREP field tests showed families saving an average of 24 piasters per day in charcoal costs using canun el duga. This amounts to more than LS 7 per month in savings. At this rate, a canun sold at LS 15 pays back its entire initial cost in just over two months. Canun el duga costs more to buy, but far less to use, so that in a very short time it becomes cheaper than the traditional stove.

APPENDICES

A. Training Design

B. Trainee's Manual, Open Draft Model (Arabic)

C. Trainee's Manual, Controlled Draft Model (Arabic)

Appendix A.

TRAINING DESIGN

Day 1 A. Tracing, Cutting and Marking (Use of Templates)

- one open draft frame
- one controlled draft frame
- two firegrates

B. Grate-punching for Two Firegrates

Day 2 Folding and Assembly

- one open draft frame
- one controlled draft frame
- two firegrates

Day 3 A. Finishing

- handles and legs for open draft frame
- handles, legs, and door for controlled draft frame
- supports and pot-rests for two firegrates

B. Painting

Day 4 Solo Production of Open Draft Frame and Firegrate

Day 5 Solo Production of Controlled Draft Frame and Firegrate

NOTE: Opening and closing ceremonies are also included in the workshop. At the opening, following a welcome, a cooking test may be scheduled to demonstrate use and efficiency of the new stove designs. At the closing, certificates of achievement might be awarded, and retailers may be invited to meet the artisans and examine their finished canun.

طرق الانتاج بكميات كبيره

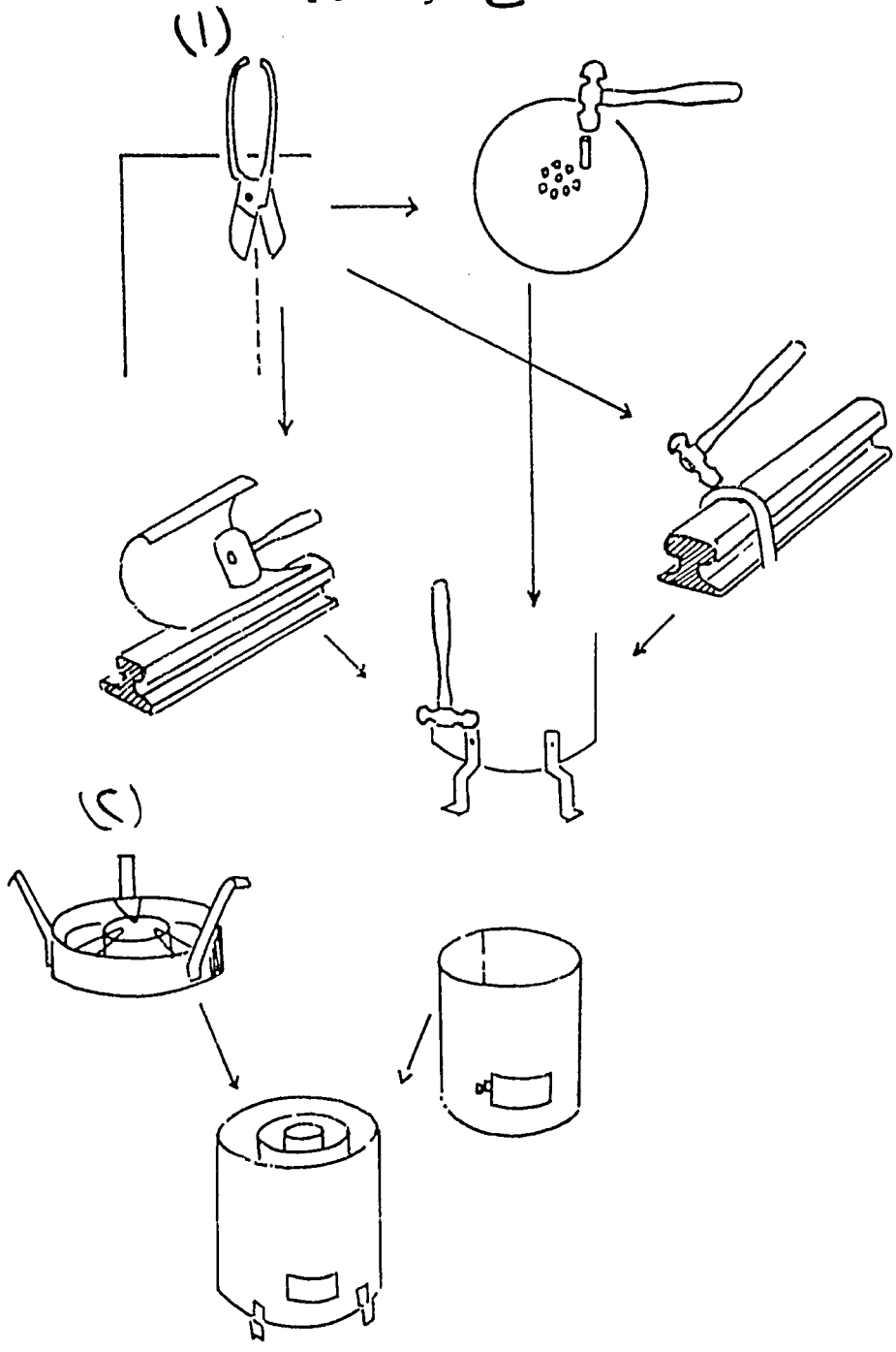

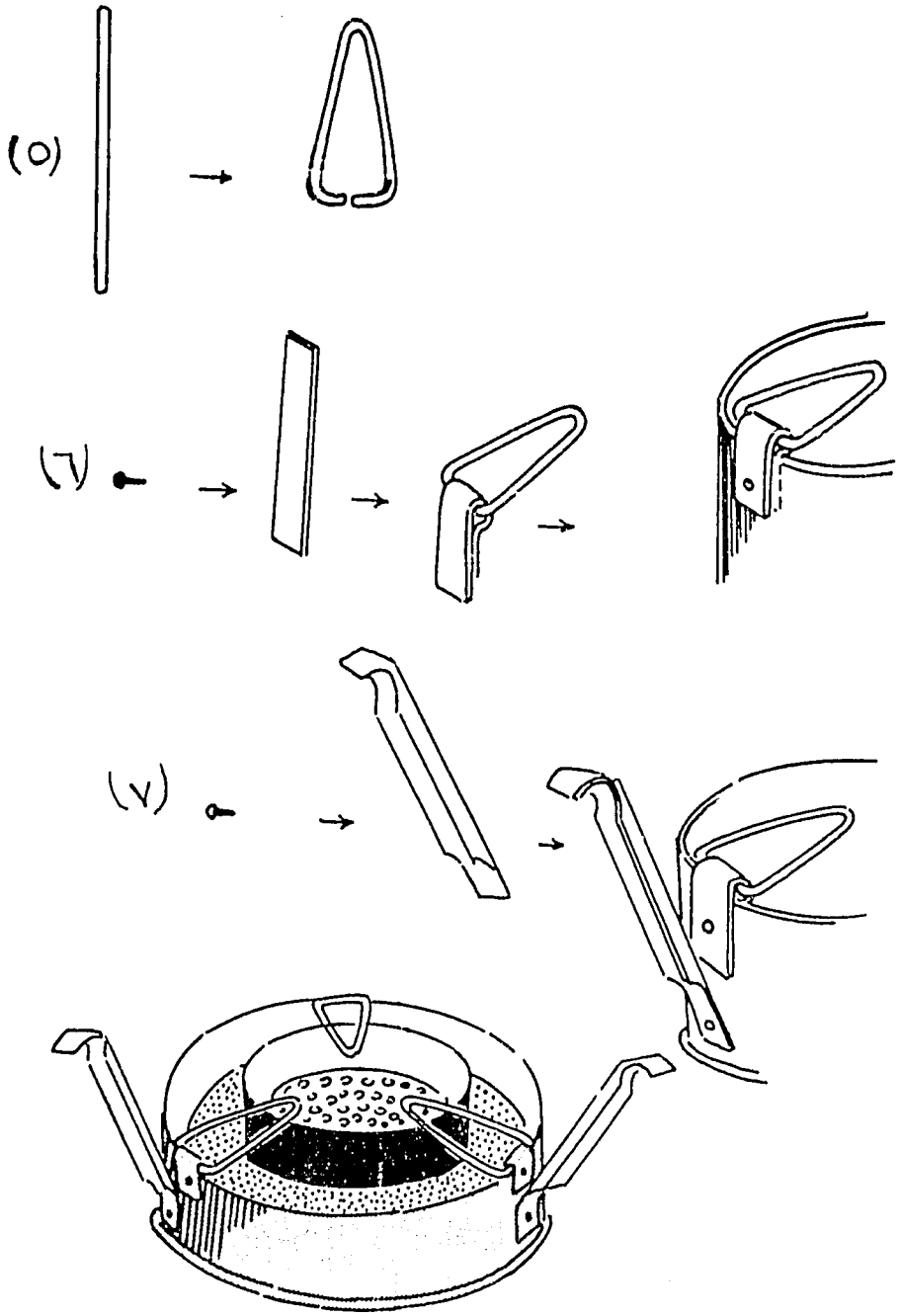

١٢

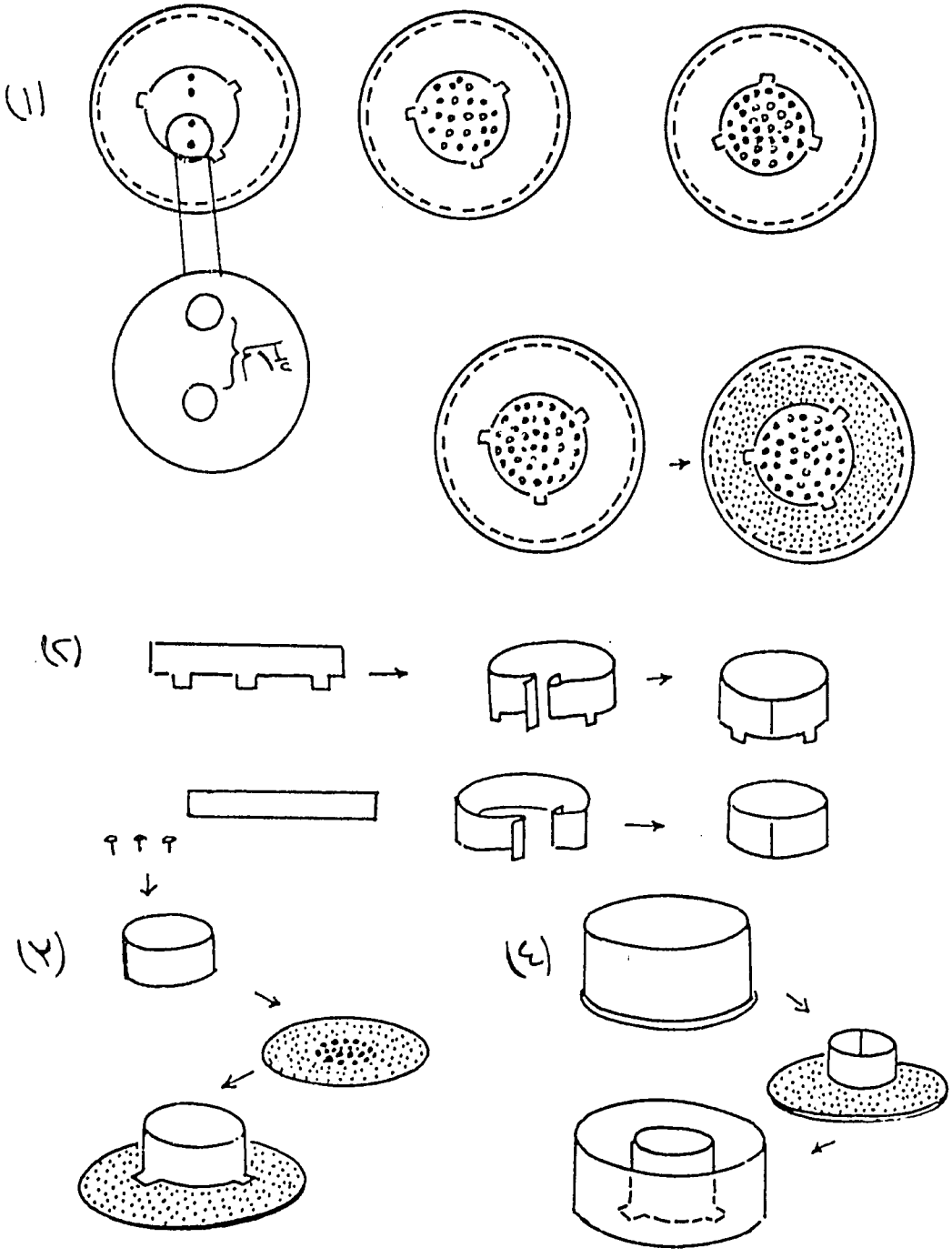
(١)
(٢)
(٣)
(٤)

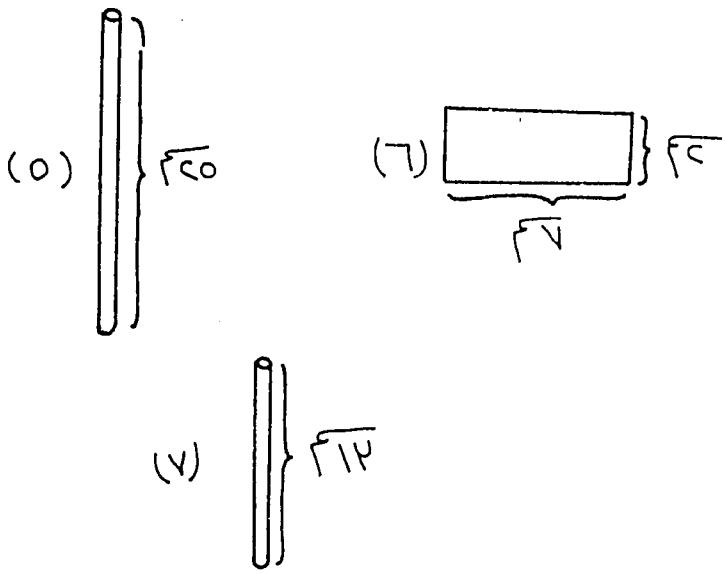
(٥)
٢٥سم
(٦)
٤سم
٧سم
(٧)
١٢سم

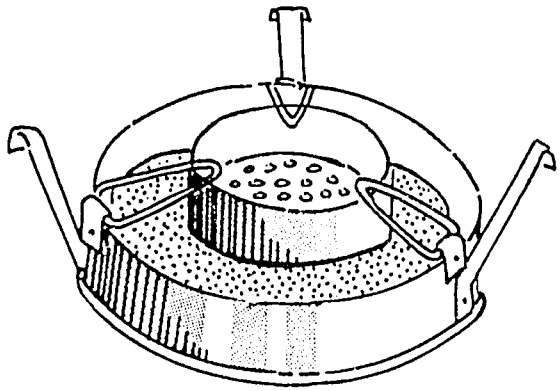

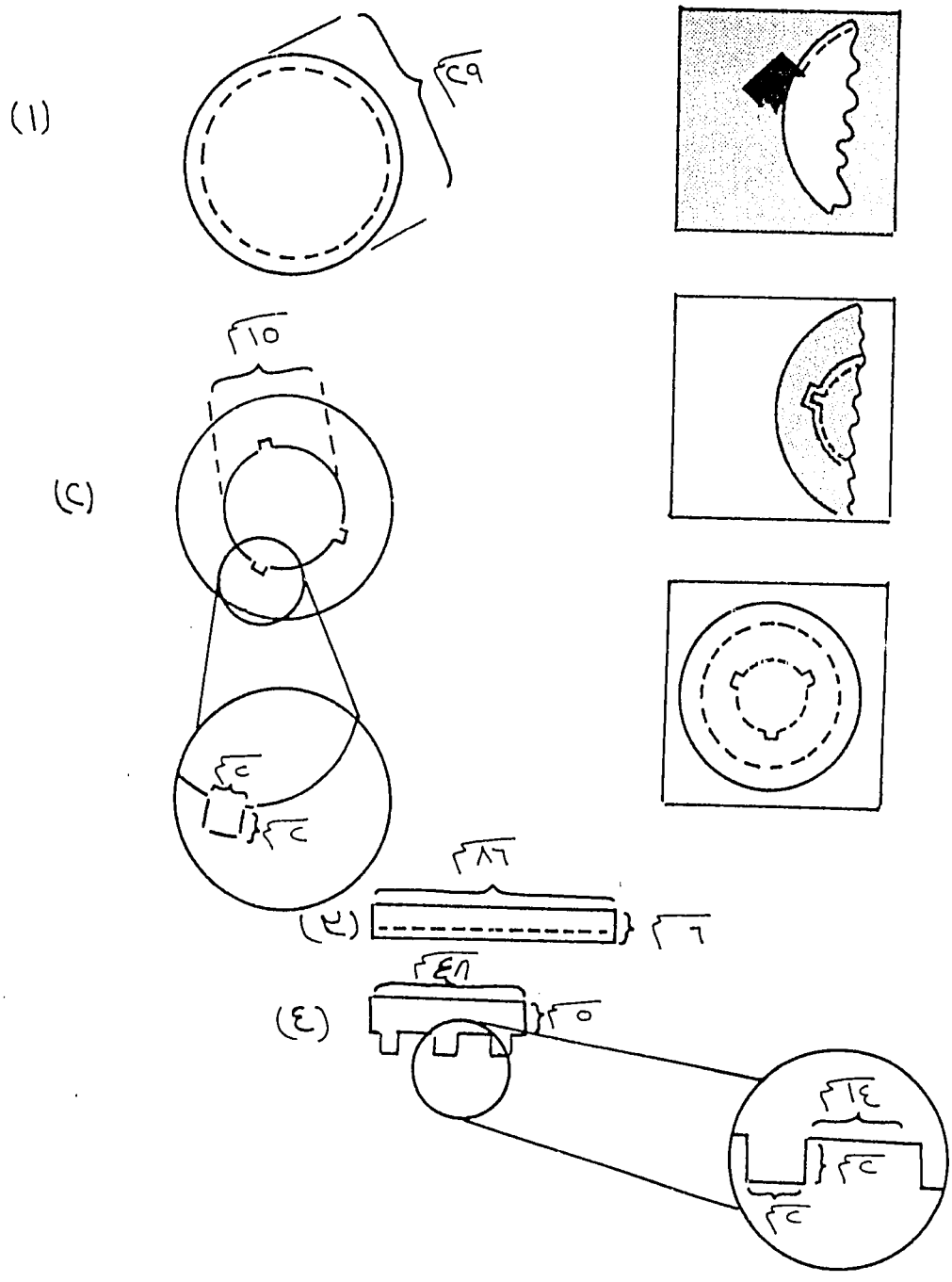
(١)
٢٩م
(٢)
١٥م
٢م
٢م
(٣)
٨٦م
٦م
(٤)
٤٨م
٥م
١٤م
٢م
٢م

مكان وضع الفحم

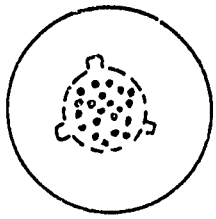

القاعده

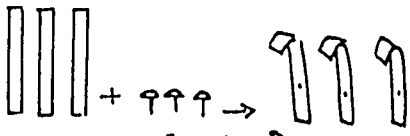

حمالات

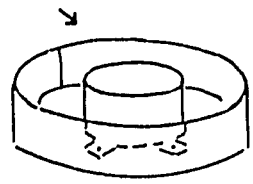

مكان وضع الفحم

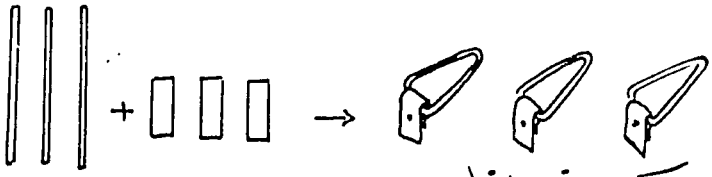

مكان وضع الاناء والرفارف

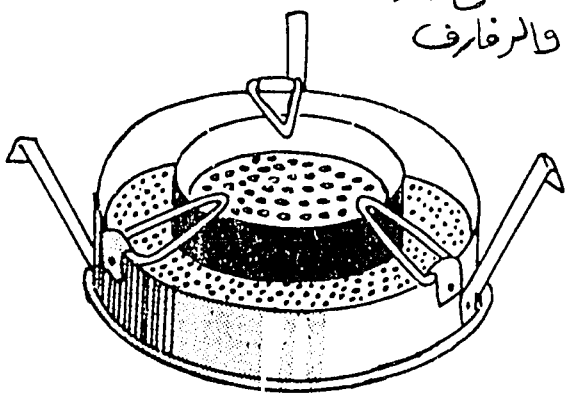

(5)
(6)
(7)
(8)

L

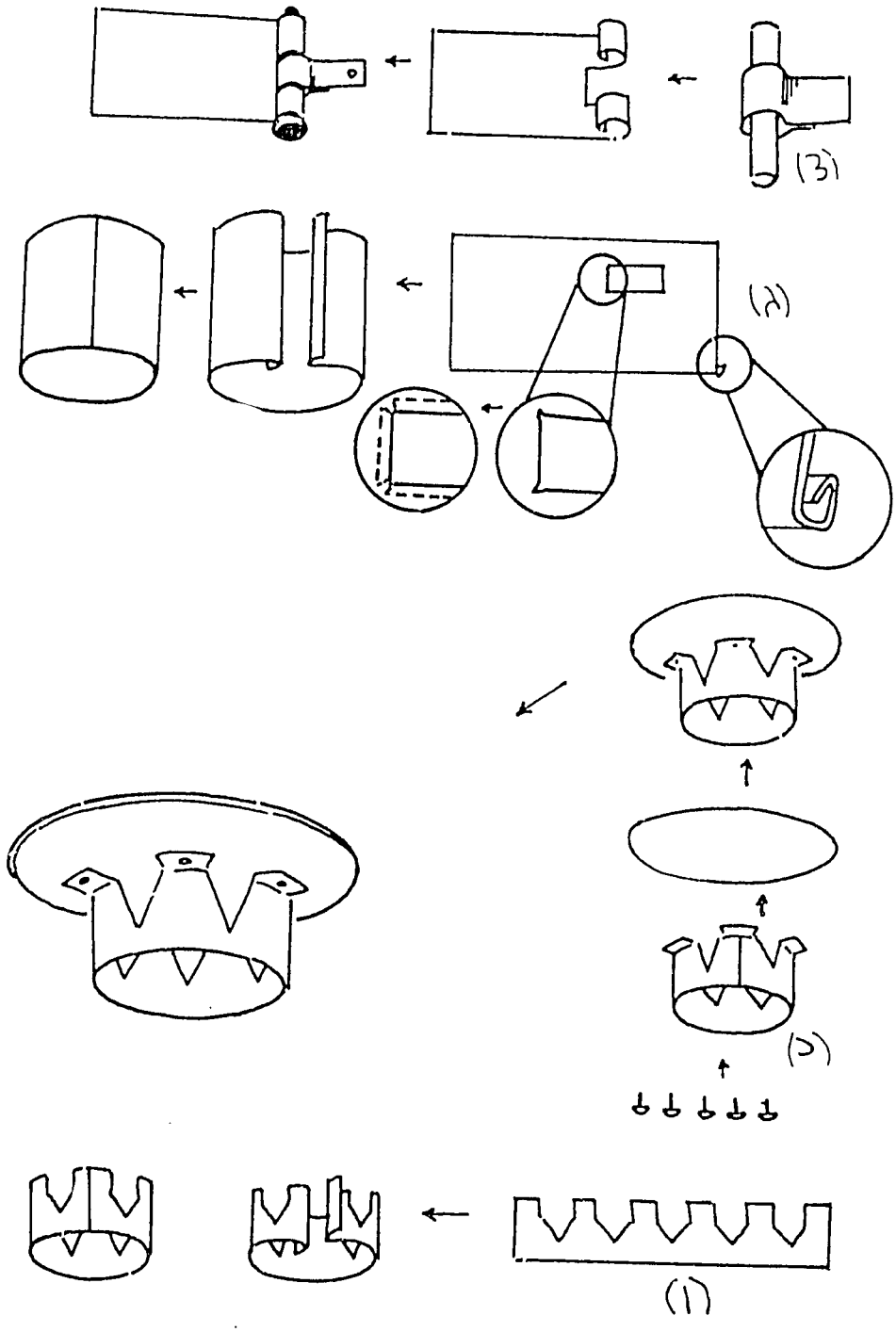

(٥)
(٦)
(٧)
(٨)
(٩)
(١٠)

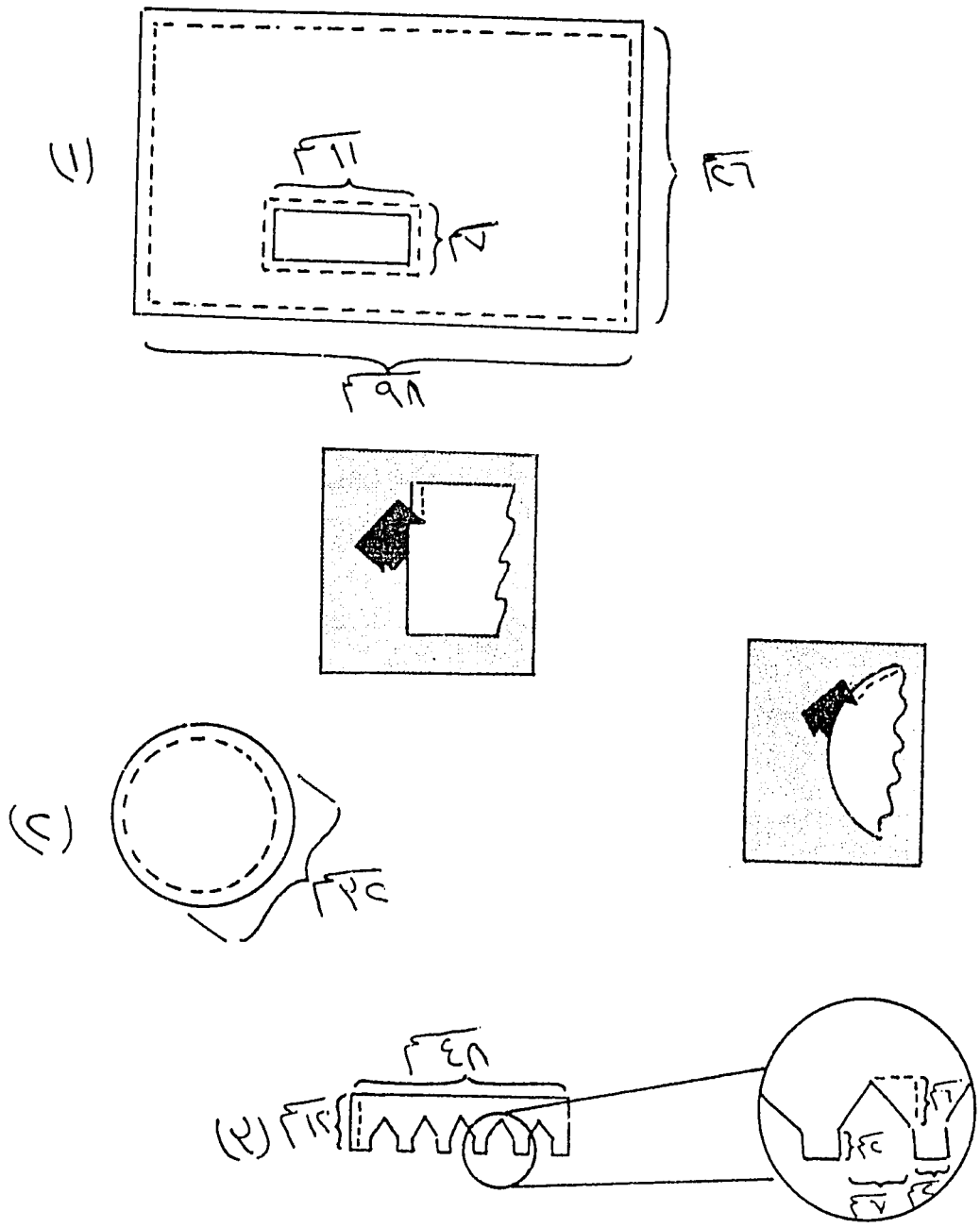
(١)
٢٦م
٩٨م
(٢)
٣٢م
(٣)
٤٨م
١٢م

الموقد ذو الباب

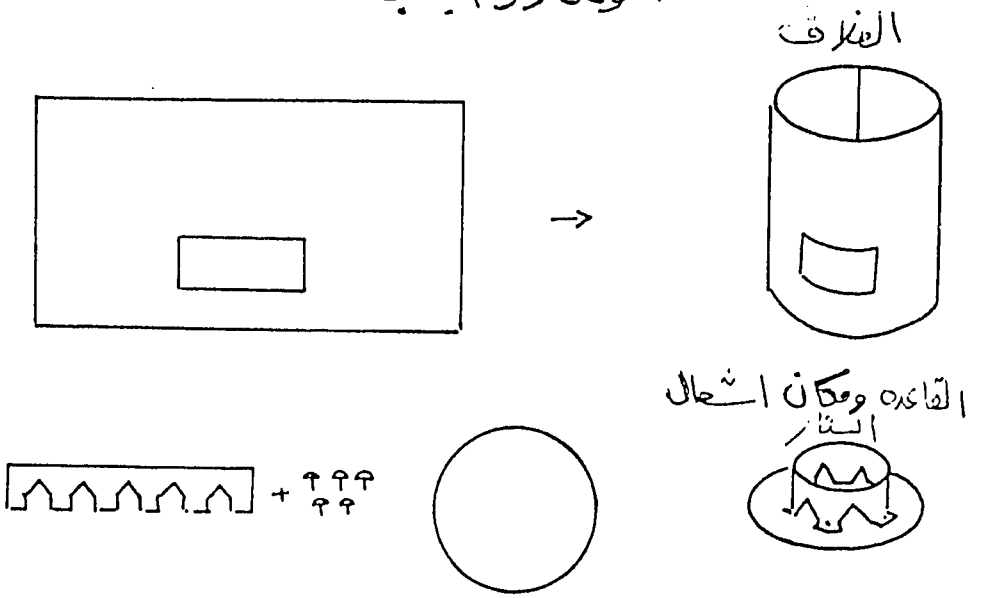

الادوات اللازمه لصناعه الموقد المطور

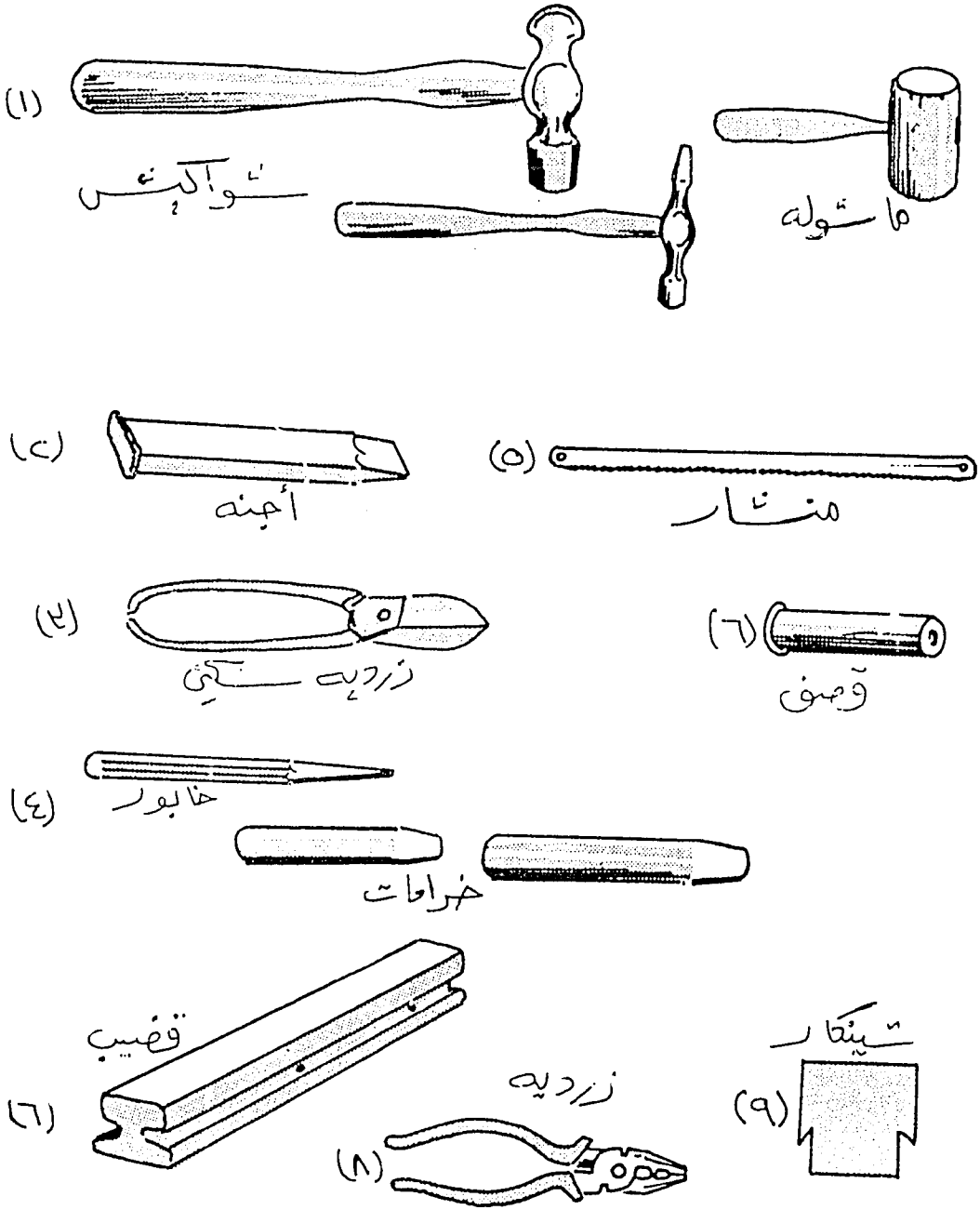

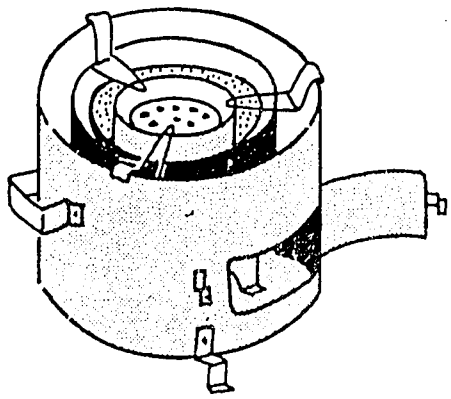

الموقد ذو الباب

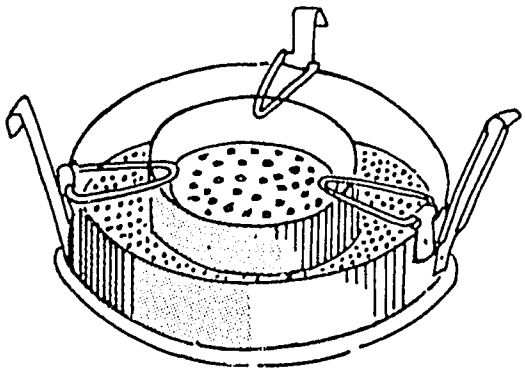

مكان وضع الفحم

طرق الانتاج بكميات كبيره

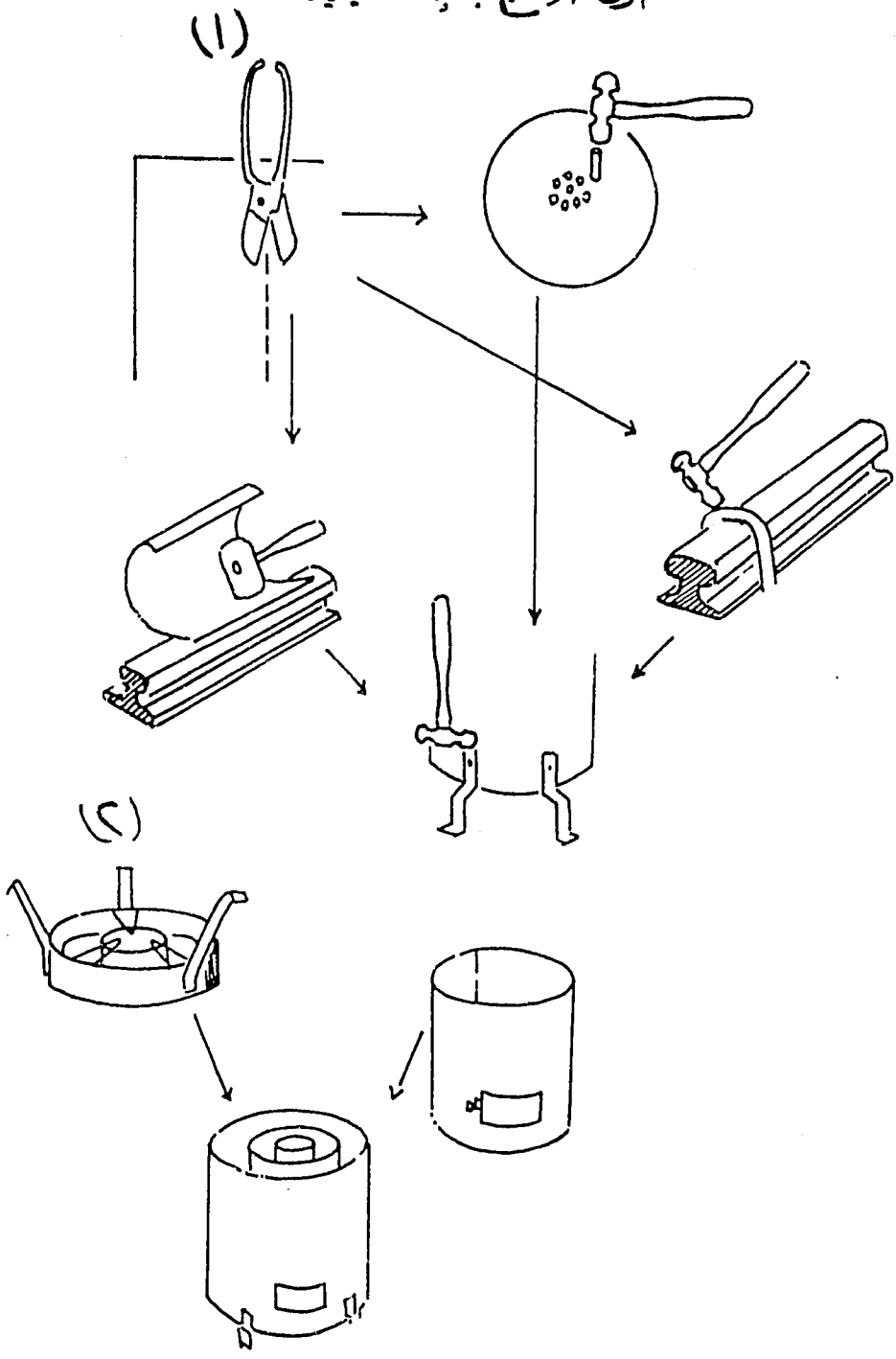

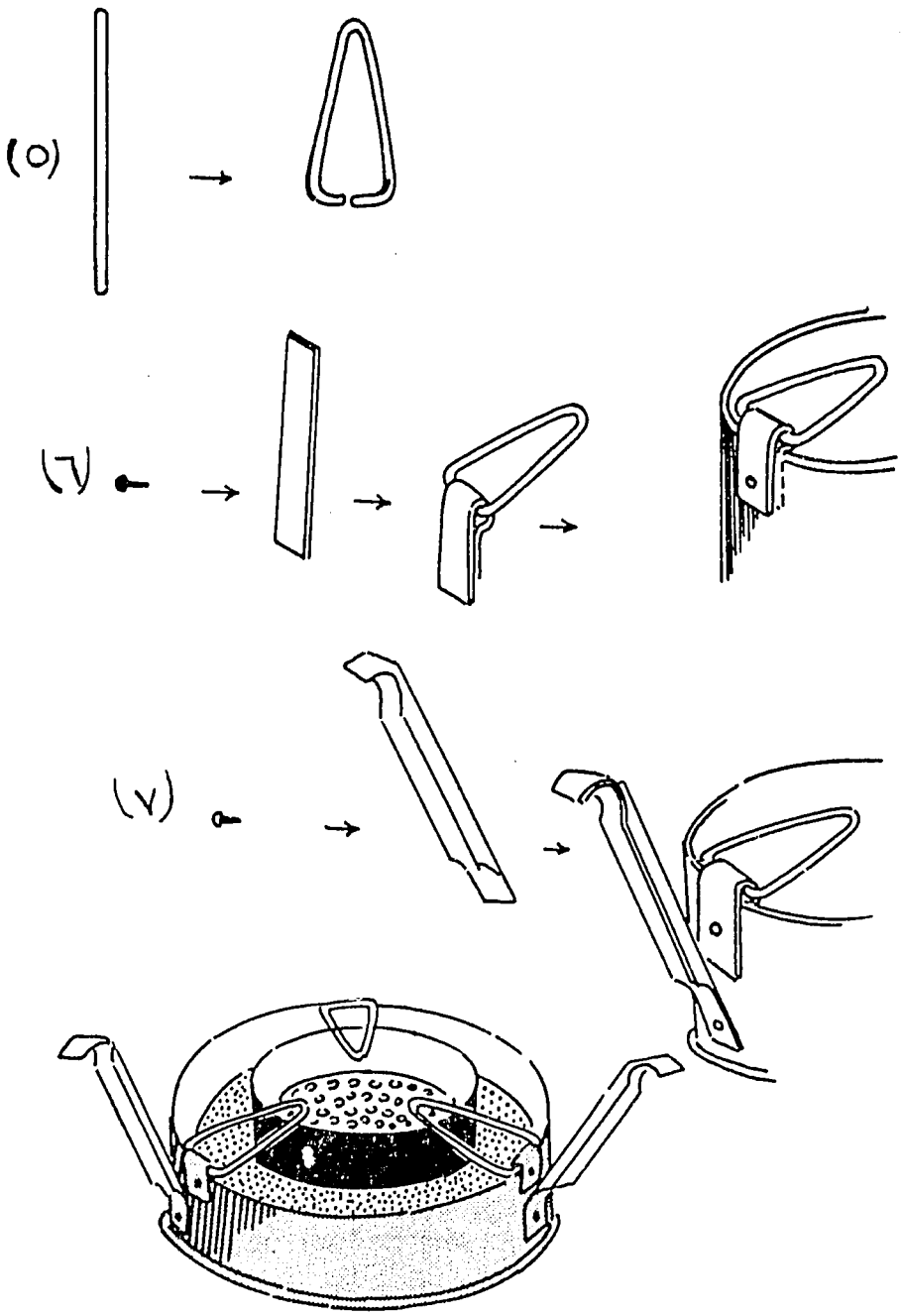
(٥)
(٦)
(٧)

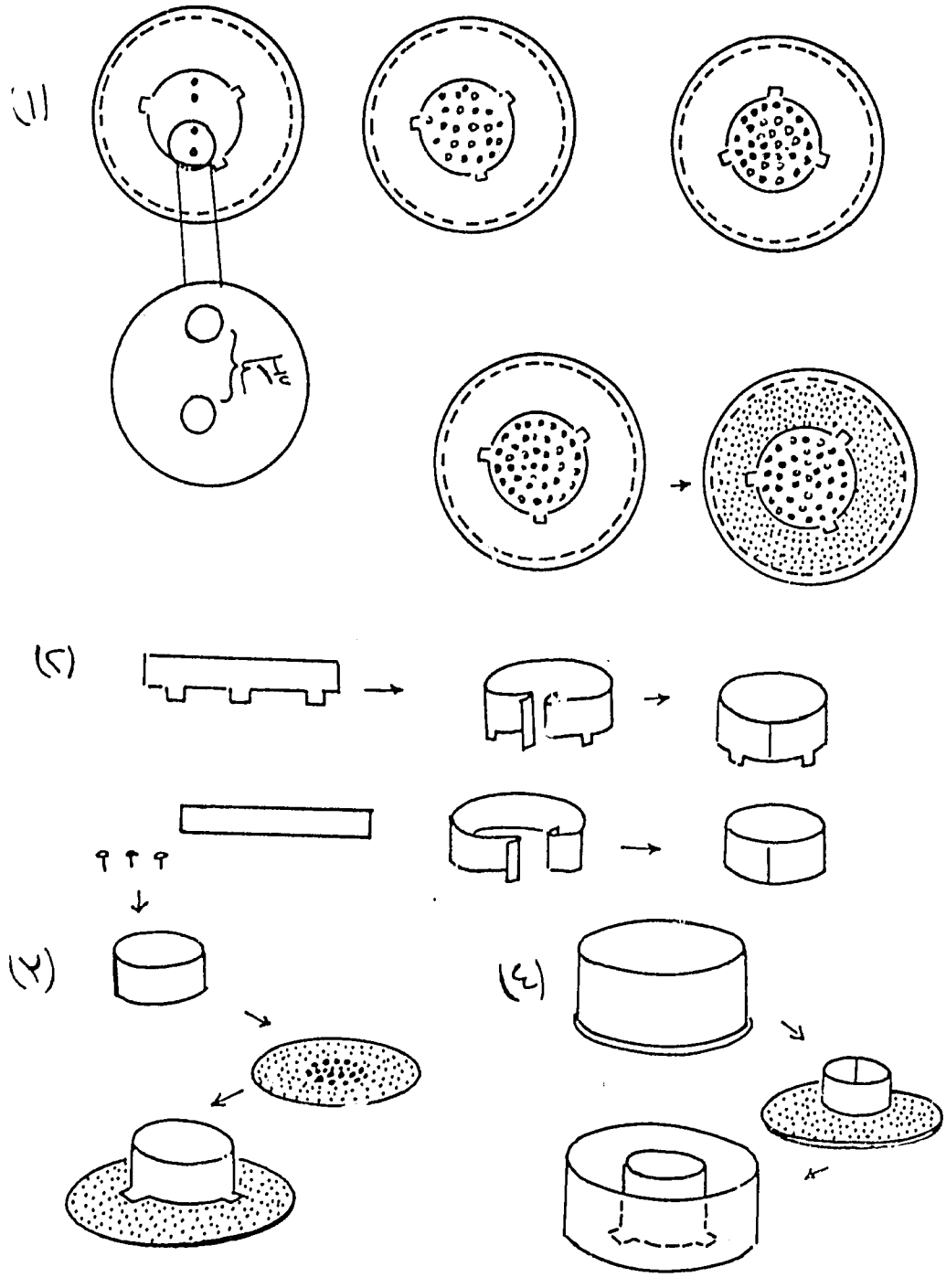
(١)
(٢)
(٣)
(٤)

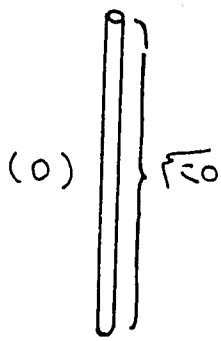
(٥)
٢٥ سم

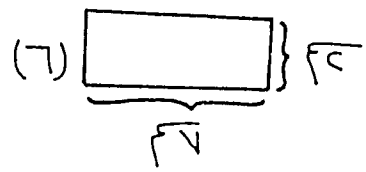
(٦)
٢ سم
٧ سم

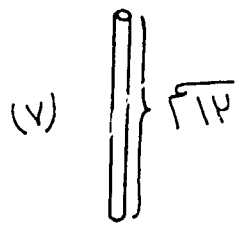
(٧)
١٢ سم

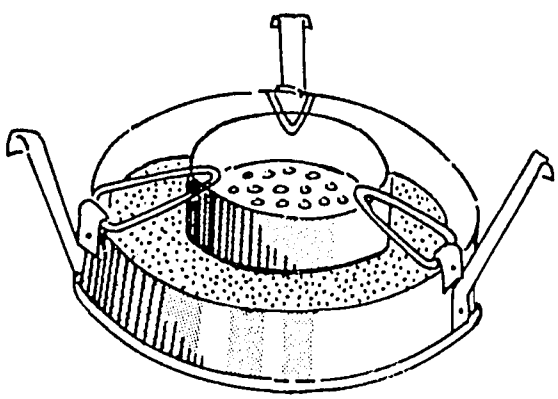

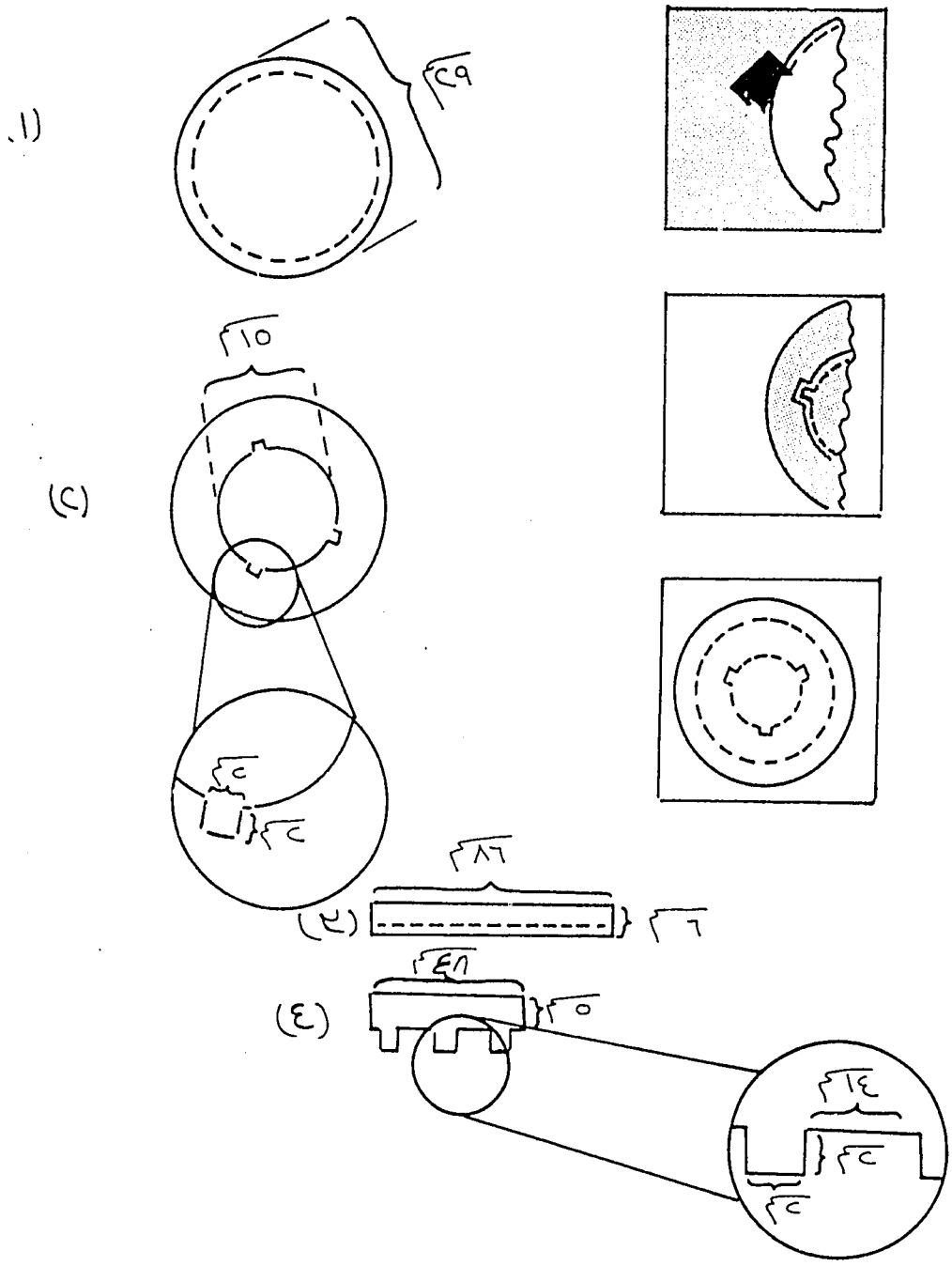
(١)
٢٩
(٢)
١٥
٢
٢
(٣)
٨٦
٦
(٤)
٤٨
٥
١٤
٢
٢

مكان وضع الفحم

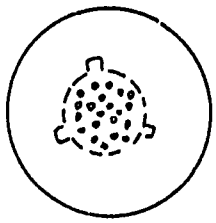

القاعدة

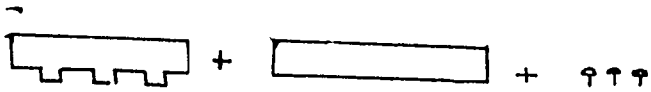

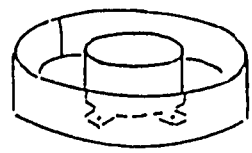

مكان وضع الفحم

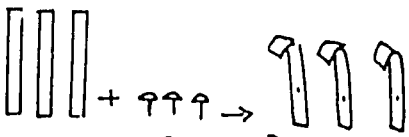

حمالات

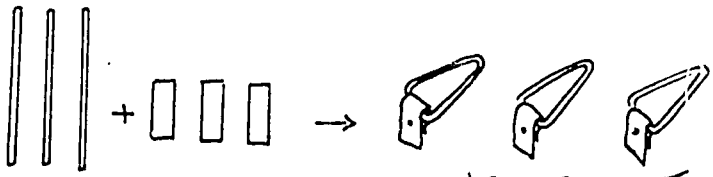

مكان وضع الإناء والرفارف

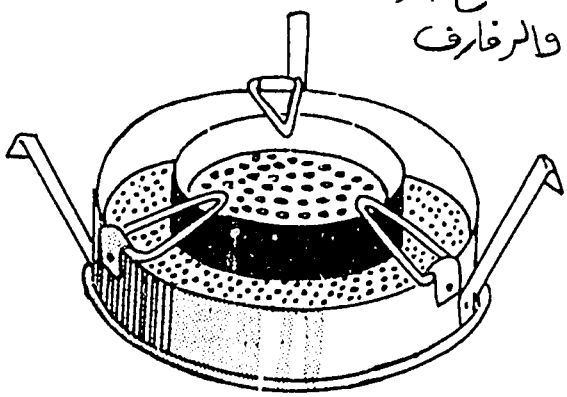

(٧)
(٨)
(٩)

L

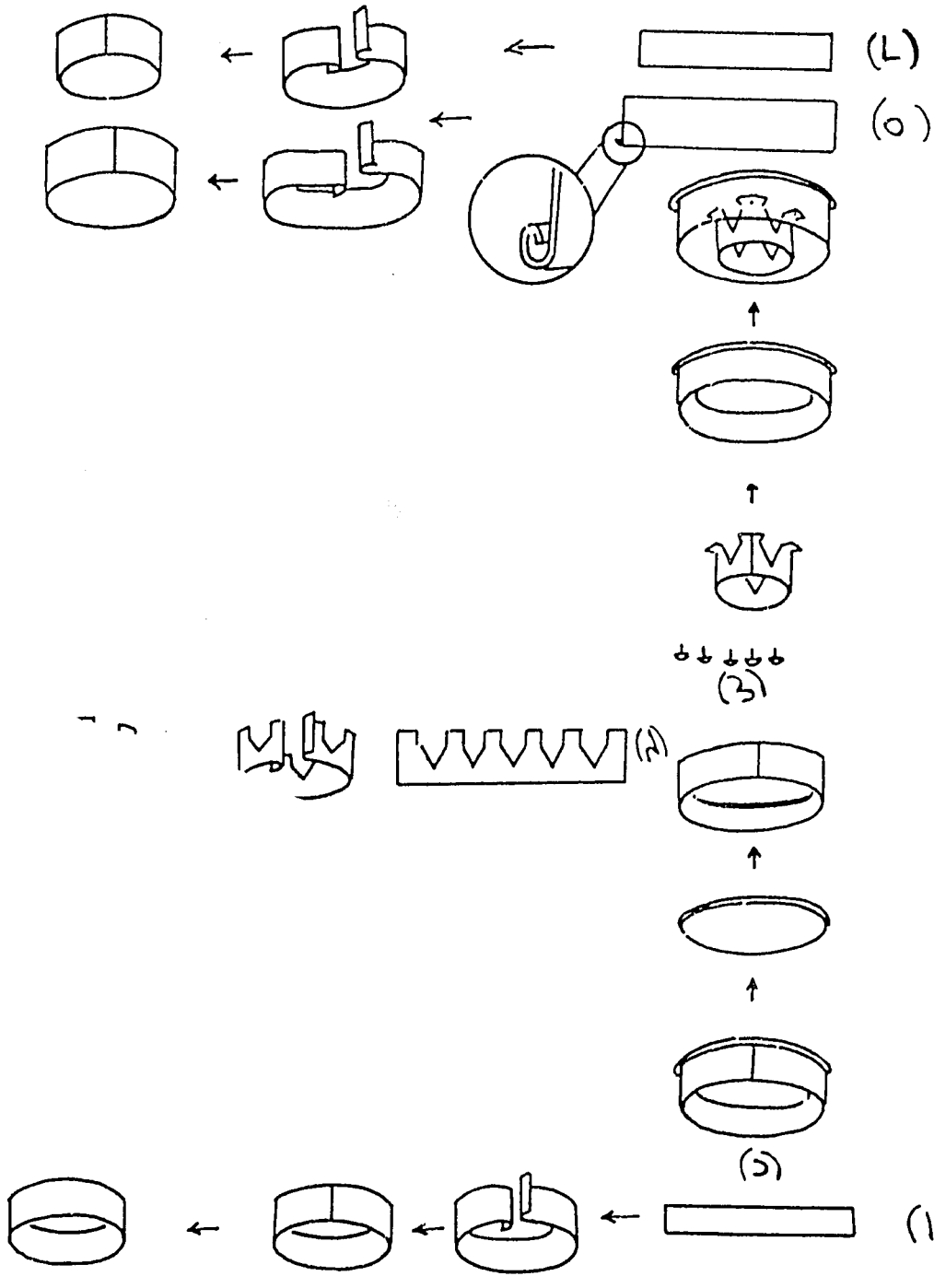

(٧)

(٦)

(١)

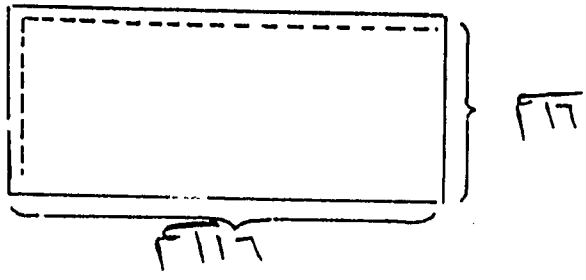

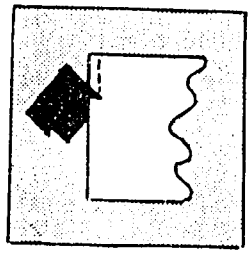

(٢)

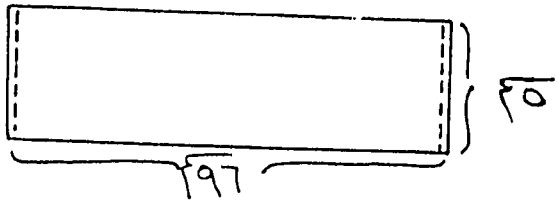

(٣)

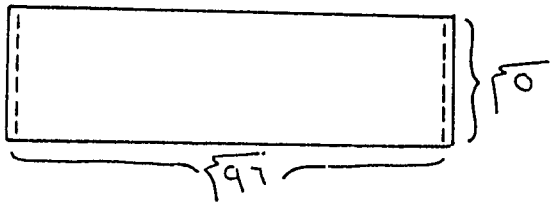

(٤)

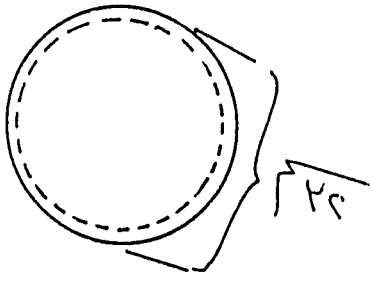

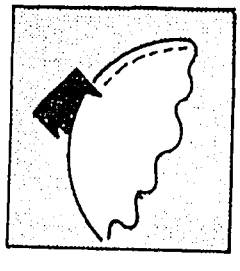

الموقد المفتوح

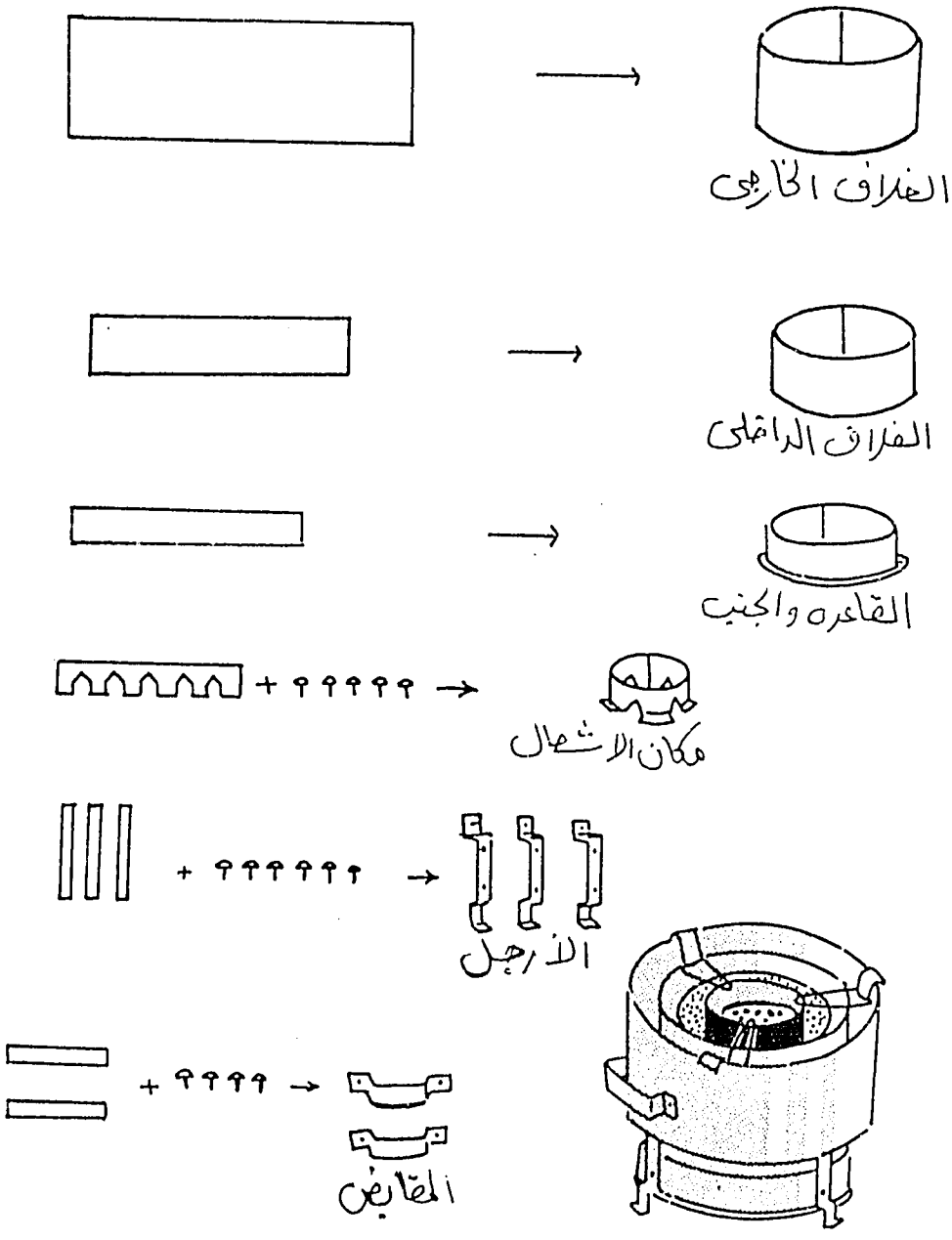

الادوات اللازمه لصناعة الموقد المطور

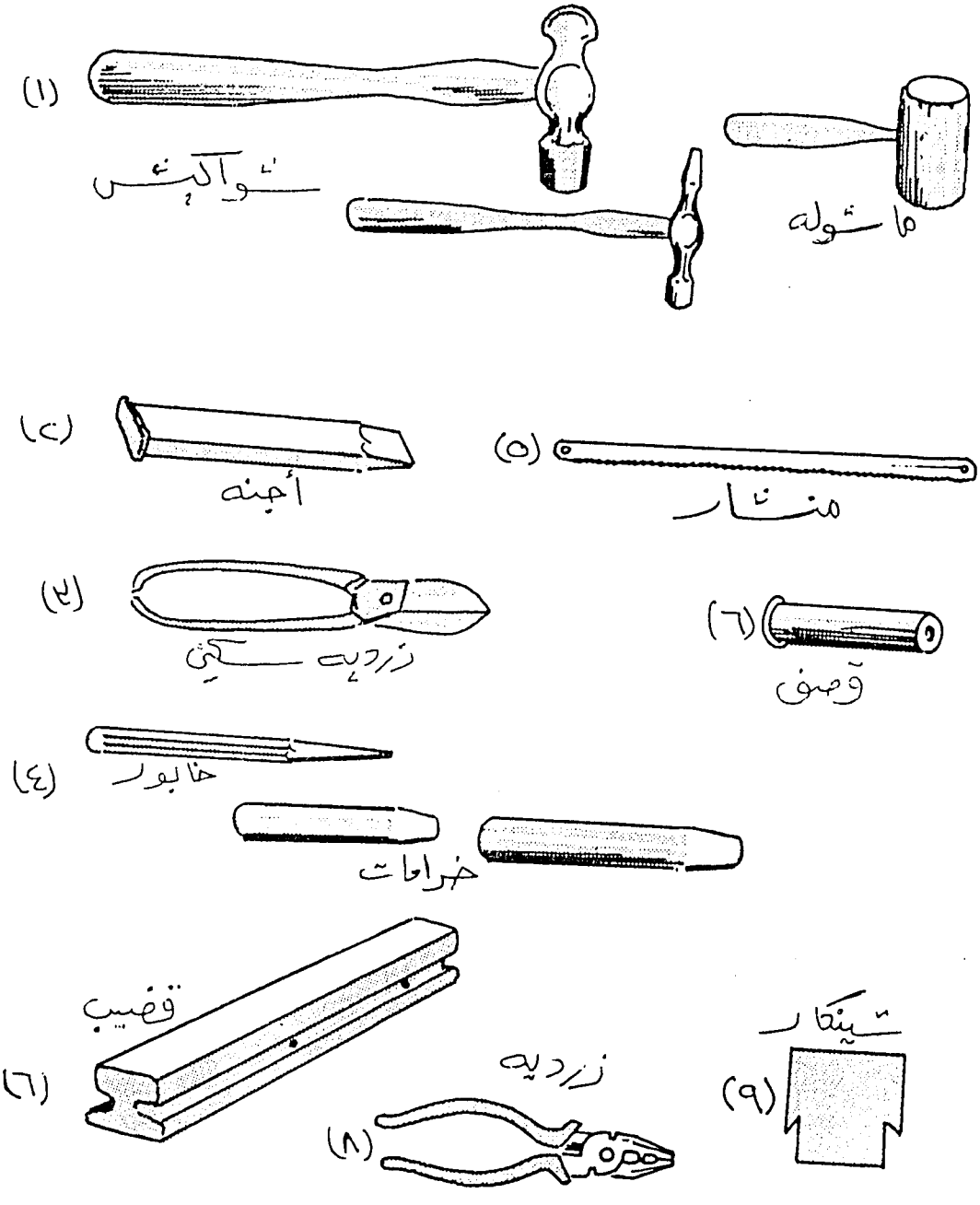

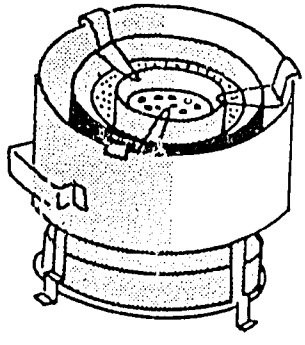

الموقد المنقح

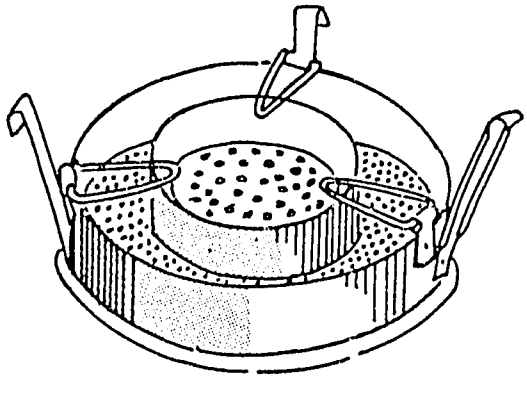

مكان وضع الفحم

المجلـــس القـــومى للبحـــوث
NATIONAL COUNCIL FOR RESEARCH
مجلـــس ابحـــاث الطاقـــة
ENERGY RESEARCH COUNCIL

صندوق بريد ٤٠٣٢ الخرطوم (السودان)
تليفون ٧٠٧٠١

Sponsored by USAID