42800 PN-AAU-075

Soil & Tillage Research, 2 (1982) 331–346
Elsevier Scientific Publishing Company, Amsterdam — Printed in The Netherlands

FARMER FIELD PREPARATION AND TILLAGE PRACTICES. IMPLICATIONS FOR FERTILIZER TECHNOLOGY RESEARCH

JACQUELINE A. ASHBY[1] and GERARD DE JONG [2]*

[1] *International Fertilizer Development Center (IFDC), and Centro Internacional de Agricultura Tropical (CIAT), Phosphorus Project, CIAT, Apartado Aéreo 6713, Cali (Colombia)*

[2] *Department of Rural Sociology, Agricultural University, Wageningen (The Netherlands)*

*On field assignment to Cassava Program, CIAT, Colombia

(Accepted 15 April 1982)

ABSTRACT

Ashby, J.A. and De Jong, G., 1982. Farmer field preparation and tillage practices. Implications for fertilizer technology research. *Soil Tillage Res.*, 2: 331–346.

The purpose of this paper is to show how information from diagnostic research on small farmer decision-making about land preparation and tillage practices may be integrated into experimental research on the design and evaluation of fertilizer technology. Analysis of different land preparation and tillage practices used by farmers in cassava production in Cauca department, Colombia is utilized to develop a model of farmers' decision-making in the choice of tillage techniques.

The decision model indicates that manual tillage practices which involve only partial field tillage are a response to relatively fixed constraints, which imply that it may be difficult for farmers facing these constraints to adopt fertilizer technology which requires full field tillage. Variables associated with choice of tillage method are identified and related to implications for experimental evaluation of fertilizer technology and the distribution of benefits from this research. The findings illustrate that diagnostic research on the agro-socioeconomic constraints faced by small farmers can alert researchers to limiting factors which require recognition in the design and testing of agricultural technology, in order to facilitate rapid and effective adoption by a majority of small farmers.

INTRODUCTION

In the phase of adaptive research when experimental testing of agricultural technology moves from highly controlled experiment station conditions to field sites, the objective is to expose technology to additional sources of stress. Among the factors contributing to stress in field conditions, and to variability in the resultant performance of technology, are farmer practices.

These practices can be viewed as "treatments" applied by farmers which may confound results obtained in farmers' fields, leading to either inconsistent findings or apparent failures of the technology. Farmer practices

0167-1987/82/0000–0000/$02.75 © 1982 Elsevier Scientific Publishing Company

need then to be considered as variables in experimental design for testing technology in field conditions.

In experimental research design, the researcher is able to define control conditions and to manipulate types and levels of treatments. Farmer "treatments" are adaptations of factors the farmer can manipulate in response to other conditions beyond his control. Diagnostic research on farmer practices aims to identify how these practices are adapted to physical-environmental and socio-economic conditions which affect how rapidly and successfully farmers are likely to adopt new practices required by improved technology (Norman, 1980). An understanding of farmers' practices, as variables likely to influence the performance of new technology, and as indicators of agro-socioeconomic constraints with which new technology must be compatible for farmers to adopt it, can serve to alert researchers to factors which require consideration in research design for technology testing.

This paper reports diagnostic research on farmer field preparation and tillage practices for cassava production in Cauca department, Colombia, a component of research on farmers fertilizer use practices in the IFDC/CIAT Phosphorus Project, Colombia. The Phosphorus Project is concerned with development of phosphate fertilizer management strategies, targeted at an estimated 1 billion ha of acid, phosphorus-deficient soils in Latin America. This area includes the main concentration of small farms, food crop production and population in the Andean countries (Fenster and Léon, 1980). The project's research on phosphate fertilizers is initiating a phase of experimental testing under conditions more closely approximating stresses faced in farmers' fields than hitherto defined for its research on the experiment station. This phase of the research concerns the interface between experimental testing and farmer practices entailed in developing fertilizer technology which ultimately can be effectively used by farmers.

The purpose of this paper is to suggest how diagnostic information about farmer land preparation practices can be integrated into experimental research on the design and evaluation of fertilizer technology. The first section discusses briefly relationships between diagnosis of farmer land preparation practices and research on fertilizer technology. Next, the research methodology is reviewed. Analysis of different land preparation practices used by farmers follows, and a model of farmers' decision-making in the choice of tillage techniques is presented. In conclusion, some implications for research on farmer fertilizer use practices and the design and evaluation of field trials are discussed.

FARMER LAND PREPARATION PRACTICES AND FERTILIZER TECHNOLOGY RESEARCH

Changes in the use of fertilizer technology recommended to farmers can have repercussions for an entire system of production activities. Hence,

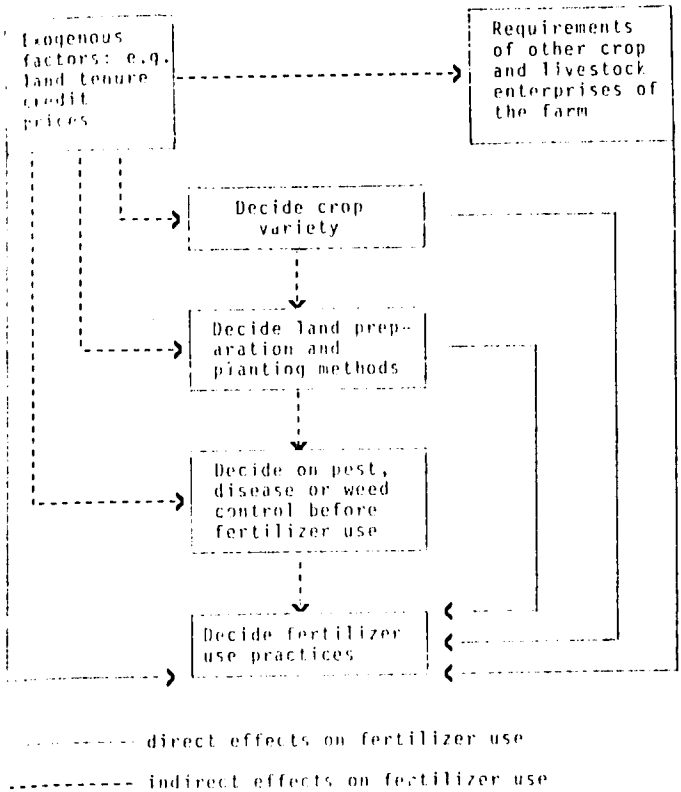

Fig. 1. System of factors proceeding farmers' decision to use fertilizer on a crop.

farmer decisions about whether to use fertilizer and how to apply fertilizer are a subset of several interrelated management decisions.

Fig. 1 illustrates how a set of practices, which are farmer "treatments" or factors the farmer can manipulate (e.g. choice of variety, tillage, weedings), are associated with a decision to use fertilizer. For simplicity, Fig. 1 is restricted to practices preceding a fertilizer application, although subsequent practices may also feed back into this decision and can set parameters influencing fertilizer use. Practices associated with production of a particular crop are interrelated in numerous ways. First, the small farmer has to make decisions in the allocation of a more or less fixed amount of resources among various inputs. Second, activities are related over time as for example, tillage technique may set certain parameters for weeding or fertilizer application. Third, practices are also dependent upon factors in the physical and social environment, shown as exogenous in Fig. 1. Factors which may not directly constrain fertilizer use may nonetheless determine other practices included in the system of production activities, and thus indirectly affect how farmers utilize fertilizer technology. For example, the availability and cost of the extra labor input required to control weed competition stimulated by fertil-

ization will affect profitability of using fertilizer and its acceptability to farmers. In this instance a labor constraint may indirectly affect fertilizer use via weed control practices.

Farmer land preparation practices are management factors which may need to be considered among the design criteria for testing fertilizer technology in field conditions in three major respects.

First, the experimental testing of phosphate fertilizer technology in the IFDC/CIAT Phosphorus Project includes evaluation of various application methods which vary the placement of phosphorus and soil–fertilizer contact, associated with the rate of P fixation (Léon and Fenster, 1979). Farmers' land preparation techniques are not always readily compatible with all of these experimental fertilizer application methods. For example, farmers who plant in isolated hills prepared manually in an unploughed field, leaving untilled soil between planting hills, would need to adjust land preparation techniques as well as fertilizer application methods in order to adopt broadcast and incorporation methods of applying rock phosphate fertilizer.

The practice of such manual tillage techniques, which can influence the fertilizer applications farmer adopt, appears to be widespread in traditional Colombian agriculture. The available census estimates report 64% of all farms in Colombia and 58% of farms in Cauca department without animal or mechanical power (DANE, 1975). A more recent survey of cassava farms shows 95% of farmers in the zone including Cauca using non-mechanical land preparation techniques (Diaz and Anderson, 1977). The majority of these farmers prepare the land without ploughing (Diaz, personal communication, 1980). This survey also shows reliance on non-mechanical land preparation practices occurring primarily among farms of less than 10 ha, but it is not restricted to such small farms: 37% of farms over 10 ha also utilized primarily manual land preparation (Diaz and Anderson, 1977).

Table I shows several other cultivation systems used by small farms in Cauca department which entail manual tillage. In sugar cane (*panela*) for

TABLE I

Land preparation methods of small farms[a]; Cauca department, Colombia

Cultivation system	Number of farms interviewed	Area (ha)	Manual tillage	Plough (oxen)
Sugar cane	766	1589	+	+
Maize–cassava intercrop	832	290	+	+
Maize–sugar cane intercrop	410	141	+	+
Maize	629	452	+	—
Cassava	371	141	+	+
Cassava–beans intercrop	76	38	+	—

[a]Area ≤ 20 ha, with ≥ 70% of income derived from agriculture.
Source: ICA (1978).

example, only furrows are worked manually in an otherwise untilled field. Maize, beans and cassava are planted in isolated hills or holes, leaving the remaining soil surface unworked.

Second, land preparation, as an aspect of soil management, influences soil fertility and yields, in particular with respect to wind and water erosion effects, and the benefits farmers can realize from fertilizer applications. With the majority of small farms in Colombia located in Andean hill farming systems, where fields are often prepared on steep slopes, this consideration is of particular importance for designing fertilizer technology for small farmers.

Third, farmers may choose among alternative land preparation methods from empirical observation that these affect planting densities, weed control, and ultimately the yields and profits they obtain from a crop. A knowledge of how farmers manipulate these relationships can be valuable in designing test conditions for evaluating fertilizer technology in farmer field trials, and for an understanding of factors influencing yield response in farmer-managed test plots.

METHODOLOGY

Diagnostic analysis of farmer practices follows two basic steps: (1) identification of practices, and alternatives among them, that farmers implement; (2) identification of criteria actually utilized in farmer choices among practices, which discriminate empirically among users and non-users of a particular practice. The use of decision trees or flow charts to model this decision process follows the methodology developed by Gladwin (1976).

In brief, a basic assumption of the decision model is that decision-makers employ simplifying procedures based on decision criteria that are discrete. A set of alternatives, a_i, can be characterized by the presence or absence of a set of discrete aspects, b_j. Decision rules can be either: (1) an ordering of alternatives on an aspect (e.g., $a_1 b_1 < a_2 b_1$, where $a_i b_j$ denotes the value of alternative a_i on aspect b_j); or (2) constraints or minimum requirements that an alternative has to satisfy in order to be selected (e.g., $a_i b_j \geqslant cb_j$ denotes the value of alternative a_i on aspect b_j, and cb_j is a minimum value on aspect b_j). The theory assumes that a continuous aspect, such as cost, is categorized by decision-makers to simplify decisions, such that it defines a discrete criterion on which alternatives are ordered (e.g. cost a_1 < cost a_2) or a constraint (e.g. cost a_1 < \$500). Discrete aspects are ranked in order of preference or utility; alternatives are then ranked and eliminated by ordered aspects, and must pass constraints in order to be chosen (for elaboration see Gladwin, 1980). The decision tree or flow chart is a sequence of discrete criteria, each of which must be passed with a yes/no response on a questionnaire, and which predicts a particular decision outcome.

One objective in the present application of this methodology is to identify those agro-socioeconomic factors, from the range of possible factors such as

those in Fig. 1, which actually operate as constraints in the decision process. The methodology is utilized for relatively small-scale, low-cost and rapid information gathering to develop hypotheses for subsequent testing with farm survey data. Hence, data were obtained from interviews and observation of production activities with a small sub-sample of informants selected from a village settlement in Cauca department. The interviews covered one plot recently prepared for cassava planting, so that each observation represents a decision about land preparation. The decision model developed from these data was then applied to predict the choice of land preparation method with interviews on a second sample of recently prepared plots.

FARMER DECISION CRITERIA FOR LAND PREPARATION IN CASSAVA PRODUCTION

Agriculture in the study site is practiced on the slopes of the eastern and central Andean ranges at an altitude from 1500 to 1800 m above sea-level in a region where slopes average 40%, and an estimated 60% of the land area is in slopes > 25% (FEDECAFE, 1978).

Soils formed from igneous rock materials and influenced by thin deposits of volcanic ash, are generally deep and well drained with an A horizon high in organic matter. In some areas soil erosion is marked in that surface deposits of volcanic ash have disappeared, leaving exposed a B horizon of red basaltic clay. Land for cassava production is prepared primarily on slopes between 25 and 50%, while smaller slopes are allocated to coffee production, and valley bottoms to sugar cane. Tillage operations for cassava involve either manual tillage with pick and spade; or ploughing with ox-drawn ploughs of a type with reversible steel blade; tractor-power is seldom utilized.

An important feature of cassava production in Cauca is the rotation of 2 to 4 successive plantings with a 2—5 year fallow of weeds or natural pasture. A rotation with fallow is a characteristic of traditional farming practices for

TABLE II

Land use, and successive plantings on cassava plots, Cauca department, Colombia

Whole farm (n = 25)		Cassava plots (n = 64)	
Land use	Area (%)	Number of successive plantings	Number of plots (%)
Coffee	17	1	47
Cassava	28	2	30
Other crops	9	3	19
Fallow	46	≥ 4	4
Total	100	Total	100

a number of other crops in this and other regions of Colombia (DANE, 1975; Dussan, 1977; Garst, 1977; ICA, 1978). Plot history, that is fallow or cultivated status of plots prior to planting, has several ramifications for land preparation in the study area. Table II shows the proportion of area cultivated and in fallow, and the number of successive plantings on 64 cassava plots for a sample of 25 farms in the research site. 46% of the land is in fallow, and slightly less than half of the plots prepared for cassava planting involved bringing fallow land into cultivation; 47% of plots were planted for the first time.

Farmers were interviewed about the differences among soils on their farms to elicit characteristics they use to classify soils. The categories identified were incorporated in subsequent interviews in which farmers described soil conditions of a plot before it was prepared for cassava planting. Tables III and IV show the interrelationships between several of these classificatory terms and between plot history, soil structure and land preparation methods. As these figures show, there is a systematic and statistically significant relationship between plot history, farmer evaluations of soil characteristics and the choice of tillage technique.

TABLE III

Soil characteristics and history of cassava plots (n = 14)

Soil characteristic		Previously fallow (%)	Previously cultivated (%)
Structure[a]	Loose	43	100
	Compact	57	0
Fertility[a]	Fertile	100	43
	Infertile	0	57

[a]Fisher's exact probability test significant $P > 0.05$.

TABLE IV

Soil characteristics, plot history and tillage system of cassava

Tillage system[a]	Previously fallow		Previously cultivated	
	Loose (%)	Compact (%)	Loose (%)	Compact (%)
Manual	0	100	28	0
Oxen	100	0	72	0
Total	100	100	100	0

[a]Fisher's exact probability test significant $P > 0.05$.

In order to analyze the decision-making criteria utilized in the association between plot history, soil evaluations and choice of tillage technique, observation of land preparation and interviews were conducted to identify differences among alternative tillage practices. A brief description of each alternative follows.

(1) Manual tillage

The soil surface is worked in only small patches of about 40–60 cm by 70–100 cm and spaced 40 cm apart in the field. These broken furrows are worked with the *pica* or pick from the top of the field downwards and aligned in rows following the slope (Figs. 2 and 3). Two or three cassava stakes are planted in each patch. Cultivated patches will usually be replanted a second time after harvest of the first crop.

Fig. 2. Manual tillage with the pica or pick.

Fig. 3. Field after completion of manual tillage.

(2) Ploughing with oxen

On a fallow plot a team of two oxen ploughs the entire field following the contour, with furrows approximately 15—20 cm wide and 10—20 cm deep. After the entire field has been worked once in this fashion, furrows spaced 1 m apart are made with the plough for planting the cassava stakes. After harvest of the first cassava crop, only this second furrowing may be performed to prepare for the subsequent planting.

(3) Ploughing with tractor

As with ox ploughing, tractor ploughing follows the contours and the entire surface of the field is worked. Furrows spaced 1 m apart are made for planting, as above, and this operation is usually performed with the ox plough after the tractor ploughing has been completed.

A farmer's decision to use one of these three options involves consideration of several aspects, which are used in the decision-making model to define the rules of choice among alternatives.

ASPECTS OF THE CHOICE AMONG TILLAGE METHODS

(1) Size, slope and accessibility of plots

Farmers' decision-making among the three alternative tillage methods considers constraints that alternatives must pass in order to be feasible. Three constraints which can eliminate ploughing by tractor are: the slope of the plot; access to the plot from a road; and size of the plot.

One reason for preparing land manually is when farmers estimate that the slope is so steep that ploughing will be slow and therefore costly. A small plot, approximately less than 0.3 ha, does not warrant the effort of arranging for a contractor of oxen to visit the plot. Typically, a farmer will not bother to plough a small plot but will prepare it manually with family labor. Moreover, when no farmer in a village owns a tractor, hiring one in the local market town involves extra costs whereas day labor or oxen can be found locally.

None of the above constraints apply to manual tillage of course. Given that ploughing remains as an alternative after evaluation of these plot size and slope constraints, a number of other factors are considered.

(2) Field preparation

A farmer's decision to use manual tillage or ploughing includes consideration of the entire process of field preparation as well as the actual tillage operation, since field preparation requirements differ among tillage techniques particularly for bringing fallow plots into cultivation. Land in fallow for more than 3–4 years often requires removal of tree trunks and stones which impede the passage of the plough. For manual tillage tree trunks and stones are left in the field. Often trees are judged impossible to uproot and are a factor which can eliminate the choice of ploughing.

(3) Labor requirements

The labor intensity of operations in cassava is an important consideration for farmers, because of seasonal labor shortages and management problems with hired labor during the local coffee harvest, which can restrict labor availability for cassava.

The total labor requirements for land preparation depend partially on field clearance, and whether the plot has been fallow. Most farmers burn off only limited areas of a fallow plot to clear weeds. If fallow land is to be prepared by hand, secondary brush and weeds are cut with the *machete* and only planting holes are carefully cleaned of weed stems and roots. If fallow land is to be ploughed with oxen, more labor intensive weeding is required to cut weeds close enough to the entire soil surface for the plough to penetrate the soil. Ploughing with a tractor requires only clearance of tree trunks or stones without weeding.

There are also differences in labor input to subsequent weedings, associated with ploughing and manual tillage. Farmers estimate that weeding after manual tillage which leaves areas of weeds rooted in the in the untilled soil, requires about 50% more labor per ha than weeding after ploughing.

Table V summarizes differences in labor input to clearing, tillage and weeding operations for the three tillage alternatives. No data are shown for tractor use on previously cultivated fields because no examples of this practice were found in the farm survey.

TABLE V

Farmers' estimates of labor days for manual, oxen and tractor field clearance, tillage planting of cassava and weeding per ha

Tillage operation	Previously fallow			Previously cultivated	
	Manual	Oxen	Tractor[a]	Manual	Oxen
Clearing	6	8	3	13	5
Tillage	19	8	5	17	6
Planting	8	11	11	8	9
Weeding	31	20	20	25	20
Total	64	47	39	63	40
Number of plots	3	3	1	2	5

[a]Tractor tillage includes ploughing by tractor followed by furrowing of the plant row with ox plough.

In sum, mechanical ploughing is of course least labor intensive. Manual preparation of a fallow plot is more labor extensive than ox ploughing: on the average farmers' estimates show that field clearance and manual tillage require about 60% more labor days per ha than required for ox ploughing. However, the time required for ox ploughing also depends on soil structure: a compact soil is estimated by farmers to require 50–100% more time to plough than a loose soil. This factor is reflected in the preference for manual tillage on compact soils observed earlier (Table IV).

The speed in land preparation achieved by ploughing reduces labor management problems. Oxen or tractors are hired on contract with a price fixed in advance. In peak seasons of labor demand day labor for manual preparation can be unreliable. Farmers may engage in wage "warfare" to attract scarce labor from other farms especially when an operation requires speedy execution by several laborers. Labor has to be supervised; and when meals are provided, this places an unwelcome burden on the women who prepare meals.

(4) Availability of hired labor or draft power

The fourth aspect farmers consider in chosing among possible tillage methods is their availability. Hiring a tractor was viewed by informants unanimously as the most troublesome: often a farmer may have to visit the Ministry of Agriculture several times to secure a contract; payment must be made in advance based on an estimate of the time required, but overestimates are not refunded.

Although only a few wealthier farmers own oxen, contracts to hire ox teams are more readily arranged than is the case for tractor hire. Ox team owners estimate the cost of ploughing and settle a contract in advance. Although the scarcity of ox teams means the contract may have to be arranged from 7–15 days in advance, it is reliable.

In contrast, farmers can have difficulty in hiring labor. Seasonal outmigration of local labor to higher-wage coffee producing regions causes a shortage of hired labor during the coffee harvests. At other seasons of the year, labor may be hired more readily — and at shorter notice — for manual land preparation than for ploughing.

(5) Capital requirements and profitability

Although less labor intensive than manual tillage, ploughing can require more capital. Table VI presents average costs for land preparation, planting and weeding operations associated with each tillage technique. As these figures illustrate, for preparing fallow plots ox ploughing requires a higher cash outlay. On previously cultivated plots, greater speed of field preparation and ploughing virtually eliminates this difference.

TABLE VI

Farmers' estimates of costs of land preparation, planting of cassava and weeding for different tillage methods, per ha (Colombian pesos)[a]

Operation	Previously fallow plots			Cultivated plots	
	Manual	Oxen	Tractor	Manual	Oxen
Clearing and	720	—	—	1560	—
tillage[b]	2280	4560	4050	2040	3300
Planting	960	1320	1320	960	1080
Weeding	3720	2400	2400	3000	2400
Total	7680	8280	7770	7560	6780
Number of plots	3	3	1	2	5

[a] 100 Col. pesos equal about US $2.00; 1 man day valued at 120 pesos; 1 oxteam day at 450 pesos; 1 tractor hour at 300 pesos.
[b] When performed and paid for as separate operations, separate figures are shown.

Since field clearance is often performed for ploughing by the contractor who supplies the oxen, the cash outlay for ox ploughing is more lumpy, while for manual preparation cash outlay can be spread over time in smaller units. This can be an advantage of manual land preparation for small farmers with cash flow constraints.

Farmers calculate the profitability of ploughing vs. manual preparation on the basis of costs of field clearance and tillage, expected weeding costs and yields. Farmers estimate that on "fertile" plots (associated with previous fallow) ploughing can result in an increment of approximately 30% in yield over manual preparation, for several seasons. First, the soil is more thoroughly worked by ploughing which is perceived as advantageous for rapid growth of cassava tubers. Second, planting density is higher in ploughed furrows than when confined to small holes. Third, weed control is improved by ploughing.

Reported cassava yields averaged 25% higher for plots ploughed by oxen than those reported for manually prepared plots. Although there are too many unmeasured variables which affect yields for a comparison of this nature to be more than suggestive, these data substantiate farmers' expectations of an association between higher yields and ploughing. Hence farmers universally evaluated ploughing as more profitable than manual tillage.

DECISION MODEL

The preceeding section has discussed several aspects on which farmers evaluate alternative tillage methods. These were listed as a series of questions in an interview to identify those decision criteria which distinguish users of a particular tillage method from non-users. This decision model was subsequently tested for a second sample of recently prepared plots.

The results are shown in flow-chart form in Fig. 4. All respondents ranked tractor or oxen as more profitable than manual preparation; and tractor, followed by oxen as less labor intensive. These criteria do not discriminate users and non-users of ploughing vs. manual tillage but are aspects for ordering alternative tillage methods. Ranked in order of preference on the profitability and labor intensity aspects, the alternatives tractor and then oxen pass through the constraints shown in Fig. 4 which determine whether either is eliminated and manual tillage is performed.

Of a total of 47% of farmers who prepared plots manually, 28% did so as a result of field preparation, steepness of slope or plot size constraints. Capital and labor constraints accounted for manual preparation of 19% of plots. The distribution among tillage techniques of recently prepared plots surveyed for testing the decision model corresponds quite closely to that for all plots included in a separate sample of farms (Table VII). As farm size decreases, the percentage of plots prepared manually increases, while average plot size decreases significantly. These figures confirm that constraints leading to use of manual tillage are most likely to occur on small farms.

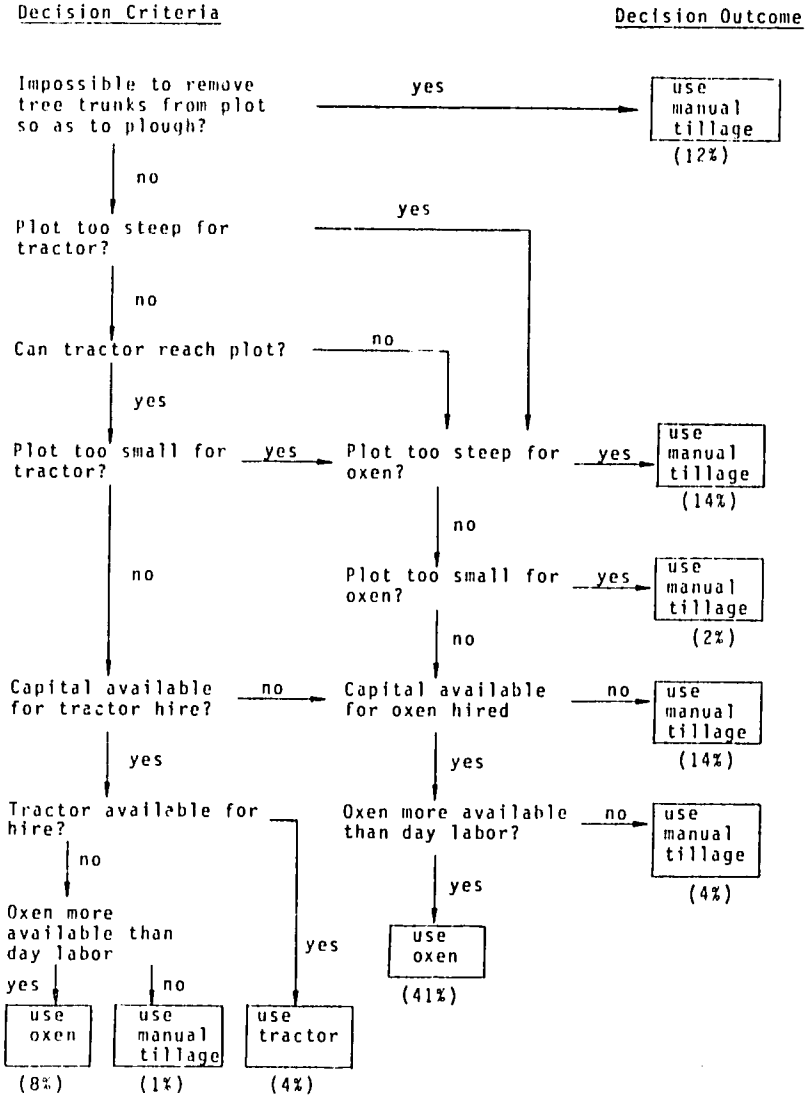

Fig. 4. Flow chart of farmers' decision to use manual, ox plough or tractor tillage (49 plots). Percent of cases at each decision outcome shown in parentheses.

TABLE VII

Distribution of tillage methods on cassava plots for three farm size ranges, Cauca department, Colombia (n = 184)

Farm size (ha)	Tillage Method			Mean plot size (ha)
	Manual (%)	Oxen (%)	Tractor (%)	
>10	35	62	3	1.32*
5—10	54	46	0	0.67
<5	49	51	0	0.45*
All plots	45	54	1	0.85

*t test significant at $P > 0.01$.

IMPLICATIONS FOR FERTILIZER TECHNOLOGY RESEARCH

Farmers' decision-making shows the importance of recognizing farmers' fertilizer use practices as part of an integrated system of management practices, in which tillage requirements can be a potential limiting factor in the capacity of farmers to adopt required application methods effectively. Research which identifies such constraints faced by farmers can alert researchers to limiting factors not previously considered in experimental design, and can help to orient agronomic and economic evaluation to specific constraints which characterize a particular group of potential users.

The decision model shows that farmers' choice of manual tillage is a response to relatively fixed constraints: slope, size and access of plots, limited access to draft power, and capital scarcity. These findings have two major implications for evaluation of fertilizer technology. It may be difficult for farmers faced with the above constraints to adopt fertilizer application methods, such as broadcast and incorporation of rock phosphate, which requires full field tillage. These difficulties are more likely to appear on small farm units.

Hence, possible methods for combining phosphorus incorporation with manual tillage, although these methods may be agronomically less than optimal, should be included in experimental testing.

A second implication is that economic analysis of the profitability of a fertilizer recommendation requiring full field tillage will need to include the possible additional costs of changing from manual tillage to ploughing, and any changes in costs of weeding, *in addition* to costs of fertilizer. These factors may alter the profitability of a recommendation for certain groups of farmers normally practicing manual tillage. If it can be demonstrated that fertilizer application technology requiring full field tillage is more profitable than traditional alternatives, taking into account all the additional costs, the possibilities of adoption of the recommendation will be enhanced.

CONCLUSIONS

Small-scale diagnostic research on farmers' decision-making about tillage practices can provide information towards the design and evaluation of experimental research on fertilizer application methods.

Farmers' decision-making shows that tillage and weed control variables need to be evaluated to arrive at recommendations for fertilizer management which are compatible with farmers' circumstances.

The integration of diagnostic research on farmers' practices such as illustrated in this paper, into the planning of experimental design and evaluation can maximize the likelihood of recommendations which are compatible with farmer circumstances, and thereby increase the probabilities of effective adoption by farmers.

ACKNOWLEDGEMENT

Research supported by a Rockefeller Foundation grant to the IFDC/CIAT Phosphorus Project. The views expressed in this paper are the authors' and are not intended to reflect those of the above institutions.

REFERENCES

DANE, 1975. Memoria del Sector Agropecuario 1954–1974. Departamento Administrativo Nacional de Estadística, Imprenta Nacional, Bogotá, 448 pp.

Díaz, D. and Anderson, P.P. (Editors), 1977. Descripción Agronómica del Proceso de Producción de Yuca en Colombia. Edición preliminar CIAT, Cali, Colombia, 400 pp.

Dussan, V.F., 1977. Estudio Básico del Distrito Sur Huila. Instituto Colombiano Agropecuario, Tibaitará, 303 pp.

FEDECAFE, 1978. Estudio de zonificación y uso potencial del suelo en la zona cafetera del departamento del Cauca. Federación Nacional de Cafeteros, Bogotá, 177 pp.

Fenster, W.E. and León, L.A., 1980. Efficient utilization of phosphate fertilizers on acid infertile soils of tropical Latin America. Research Report (July 1977–June 1980), International Fertilizer Development Center, IFDC, IFDC/CIAT Phosphorus Project, CIAT, Cali, Colombia.

Garst, E., 1977. Estudio Básico de la Zona Sur del Departamento Norte de Santander. Instituto Colombiano Agropecuario, Tibaitatá, 305 pp.

Gladwin, C., 1976. A view of the Plan Puebla: an application of hierarchical decision models. Am. J. Agric. Econ., 58: 881–887.

Gladwin, C., 1980. A theory of real-life choice: applications to agricultural decisions, In: P. Bartlett (Editor), Agricultural Decision Making. Academic Press, New York, pp. 45–85.

ICA, 1978. Identificación de Sistemas de Producción Agropecuaria y recommendaciones en primera approximación Distrito Popayan. Instituto Colombiano Agropecuario, Cali, 50 pp.

León, L.A. and Fenster, W.E., 1979. Management of phosphorus in the Andean countries of tropical Latin America. Phosphorus Agric., 76: 57–73.

Norman, D., 1980. The farming systems approach: relevancy for the small farmer. Rural Development Paper No. 5, Department of Agricultural Economics, Michigan State University, East Lansing, MI, 26 pp.

Soil & Tillage Research, 2 (1982) 347–357
Elsevier Scientific Publishing Company, Amsterdam — Printed in The Netherlands

COMPARING FORMS AND SOLUTIONS OF THE SINGLE ROOT SOIL WATER EXTRACTION MODEL*

REUVEN STEINHARDT[1], RIENK R. VAN DER PLOEG[2] and WILFRIED EHLERS[3]

[1] *Institute of Soils and Water, ARO, Bet Dagan (Israel)*
[2] *Institute of Soil Science and Forest Nutrition, Georg-August University, Göttingen (Federal Republic of Germany)*
[3] *Institute of Agronomy and Plant Breeding, Georg-August University, Göttingen (Federal Republic of Germany)*

(Accepted 23 November 1981)

ABSTRACT

Steinhardt, R., Van der Ploeg, R.R. and Ehlers, W., 1982. Comparing forms and solutions of the single root soil water extraction model. *Soil Tillage Res.*, 2: 347–357.

Different forms and solutions of the single root model (SRM) arise from: assumed functional relationships between the radius of the SRM soil cylinder and the rooting density (L_r); averaging modes of hydraulic conductivity (K); steady-state or steady-rate flow assumption; and methods of evaluating the root geometry factor (B). SRM forms and solutions, in particular B approximations, were evaluated by analytical comparison and by performance, when incorporated into a water uptake simulation model for oats. The approximation of B as a constant, or as an exponential function of rooting density (B'), had only a small temporary effect on soil water extraction rates and potentials at the soil–root interface. A combination of B' with exponential rooting profile estimation is proposed as an optimal SRM form for water uptake analysis. It is shown (in appendices) that: (1) assuming SRM steady-state flow to originate on average from the volumetric middle of the SRM soil cylinder is nearly equivalent to the assumption of a steady-rate flow; and (2) utilizing a geometric mean K for the SRM soil cylinder may cause soil water extraction rates to be underestimated.

INTRODUCTION

The single root soil water extraction model, the SRM, as developed by Philip (1957) and Gardner (1960), is part of the majority of the water flow simulation models of the soil–plant–atmosphere continuum, the SPAC.

An important aim of tillage is the control of soil water uptake by crops through the modification of: (1) soil water characteristics; (2) rooting density; and (3) rooting depth. The influence of factors (1) and (2) on soil

*Joint contribution of the Georg-August University, Göttingen, F.R.G., and the Agricultural Research Organization, Bet Dagan, Israel, No. 181-E, 1980 Series. The work was supported by the German Association for Scientific Cooperation MINERVA.

0167-1987/82/0000–0000/$02.75 © 1982 Elsevier Scientific Publishing Company