CS
G27.C2
1 A2

bulletin Y-10
tennessee valley authority
august 1970

AGR
Fertilizer

engineering evaluation of selected fertilizer production facilities in COLOMBIA

Prepared for

AGENCY FOR INTERNATIONAL DEVELOPMENT

by

I. W. McCamy and D. R. Waggoner

National Fertilizer Development Center
Tennessee Valley Authority
Muscle Shoals, Alabama 35660

TENNESSEE VALLEY AUTHORITY
MUSCLE SHOALS, ALABAMA 35660
Office of Agricultural and Chemical Development

September 15, 1970

AIR MAIL

Dr. Wade Gregory
Team Leader
USDA/PASA/Colombia
c/o American Embassy
Bogota
COLOMBIA

Dear Wade:

Under separate cover we are forwarding 25 copies of the TVA report "Engineering Evaluation of Selected Fertilizer Production Facilities in Colombia." We have done nothing on the Spanish version and will not unless we hear further from you.

I hope you find this report useful and that we can be of further help to you again at some future time.

Along with a copy of this letter we are sending three copies of this report to AID/Washington.

Sincerely yours,

Donald L. McCune, Director
International Fertilizer Development
Staff

CC: Mr. Donald Fiester
AID/Washington

TABLE OF CONTENTS

Summary and Recommendations 2
Introduction 3
General Background 4
FERTICOL 7
General Background and Analysis 7
Recommendations 10
Analysis of Plants for Production of Mixed Fertilizer 19
Summary and Additional Comments 23
Miscellaneous Activities 26
Appendix 27
AMOCAR-ABOCOL Complex at Cartagena 27
Tables on Fertilizer Costs and Production 29
Small Fertilizer Mixing Plants Visited in Colombia 36
Report of Advance TVA Fertilizer Team to Colombia 38

FIGURES

1. FERTICOL Urea Unit 8
2. Proposed Modifications to FERTICOL Urea Unit 11
3. Proposed Bulk Handling of Raw Materials at FERTICOL 13
4. Elevation Detail of Proposed FERTICOL Bulk Handling Equipment 14
5. Possible Utilization Patterns for FERTICOL Ammonia 17
A-1. Amounts and Types of Fertilizer Produced in Colombia, 1963-69 33

TABLES

1. Estimated Availability and Production Capacity of Ammonia for Fertilizer Production in Colombia 4
2. Estimated Availability of P_2O_5 in Colombia 4
3. Estimated Production of Mixed Fertilizers (mt) 5
4. Fertilizer Ratios and Grades Recommended by I.C.A. for 1970 5
5. Screen Analyses, FERTICOL Ammonium Nitrate Plant 10
6. Current Conditions vs. Phase I Conditions—FERTICOL Products 15
7. Estimated Investment to Convert the FERTICOL Ammonium Nitrate Granulation Unit to Production of NPK Grades 15
8. FERTICOL Grades and Manufacturing Costs 16
9. Comparison of Manufacturing Costs of Grades Proposed for FERTICOL with Current Equivalent Selling Prices at Bogota 16
A-1. FERTICOL Urea Solution and Prill Manufacturing Cost (80% Urea Solution Calculated on 100% Basis) 29
A-2. FERTICOL Ammonia Manufacturing Cost 30

SUMMARY AND RECOMMENDATIONS

Several programs are being conducted by the U. S. Agency for International Development (through USAID/Colombia) to help Colombia's food production industry. This study was limited to two segments of the fertilizer production industry: (1) FERTILIZANTES COLOMBIANOS, S. A. (FERTICOL) and (2) bulk-blending plants. The plants reviewed by the TVA team are existing units having various problems associated with equipment design, low production rates, low operating factors, and poor quality products. Recommendations to improve the FERTICOL operation are discussed in Section II. Similar discussions for the bulk-blending plants are included in Section III. A summary of recommendations follows:

FERTICOL

Short Range

1. Stoodite coat the blades of the ammonium nitrate (AN) pug mill to improve the service factor.
2. Raise the overall pH level in the pug mills to decrease the corrosion rate.
3. Improve the AN screening operation by changing the mesh size and type to improve the product quality.
4. Change to horizontal pumps for 95% AN feed to improve the service factor.
5. Use the old Montecatini combination high-pressure separator-absorber vessel (C-2) in the urea unit as a low-pressure absorber. This will reduce the amount of ammonia in the tail gas and allow production of additional urea [55-57 metric tons/day (mt/day) total production].
6. Carry out the modifications recommended by The White Superior Division, White Motor Corporation or install electrical drives to improve the reliability of synthesis gas compression in the ammonia unit. This will improve the service factor and should increase the production rate to approximately 70 mt/day.
7. Install a small ammonia recovery unit to recover ammonia from flash and purge gases.
8. Install a 200,000-gallon (gal) aluminum storage tank for 83% nitrate to provide flexibility in operation of the urea and AN plants.
9. Install a new high-pressure decomposer-separator and a new high-pressure cooler, each identical to the Girdler units now in operation in the old Montecatini system of the urea unit. This should increase the production rate to approximately 62 mt/day.

One Year

Modify the AN granulation unit to permit production of granular NPK grades. This will shift the AN production from 26% N to products that are more marketable. FERTICOL should send mechanical and technical personnel to visit TVA and similar installations to study alternative equipment and processes before making this change.

Long Range

1. Develop a market and a distribution system for urea - ammonium nitrate (UAN) nonpressure solutions.
2. Convert FERTICOL urea production from solids to UAN solutions.

MIXING PLANTS[1]

During recent years, mixed grades have comprised about two-thirds of the total fertilizer production in Colombia. Production of compound mixed fertilizers at ABOCOL has shown moderate annual increases since 1965 while production from the mixing plants fluctuated during the same period and dropped sharply since 1968. Visits to several mixing plants in Colombia revealed many poor practices in operation of the facilities; none was consistently producing high-quality fertilizers. Fertilizer prices were not too far out of line for many of the mixed grades, although some mixed grades and some imported raw materials were priced too high. An analysis of the mixed fertilizer industry in Colombia indicated that certain changes in policies and procedures should help provide the Colombian farmer good quality fertilizer at a generally lower price than he is now paying. A summary of recommendations follows.

1. Provide a comprehensive fertilizer education and training program for fertilizer producers and farmers.
2. Provide an effective fertilizer quality control program.
3. Modify FERTICOL plant to produce granular low-nitrogen mixed fertilizer.
4. Operate smaller mixing plants to produce low-tonnage specialty grades of satisfactory quality.
5. Regulate prices of certain imported fertilizer materials so that mixing plant operators can obtain these materials at reasonable costs.
6. Allow SULFACIDOS to obtain ammonia or ammoniating solutions at reasonable prices. SULFACIDOS should granulate predominantly low-nitrogen grades.
7. Allow ABOCOL and MONOMEROS to supply the predominantly high-nitrogen mixed grades used in Colombia.
8. Develop a modern fertilizer bulk-blending program when the Colombian fertilizer industry becomes more sophisticated.

[1]This includes plants for producing chemically mixed fertilizers and also plants for producing bulk blends.

INTRODUCTION

At the request of USAID/Colombia, the Tennessee Valley Authority (TVA) agreed to provide technical assistance to the FERTICOL nitrogen fertilizer complex and several small bulk-blending plants. This report covers work of the second TVA team, which visited Colombia during February and March 1970; a report of the first team's visit is in the appendix. Specific objectives were to:

1. Analyze alternatives for utilization of the FERTICOL plant including flow diagrams and investment and operating costs.
2. Provide assistance for the 20-30 bulk blending plants in Colombia by visiting and observing a "cross-section" of these plants; identifying problems; and suggesting alterations in equipment, raw materials, and procedures to improve operation.

The study was conducted by a two-man team consisting of I. W. McCamy, and Donald R. Waggoner, chemical engineers. The team arrived in Colombia on February 13, 1970, for a 4½-week investigation period. This included visits to several bulk-blending and mixing plants in Bogota and Barrancabermeja, a private sector fertilizer production facility in Cartagena, a facility under construction in Barranquilla, and the FERTICOL plant at Barrancabermeja. The report was completed with additional study and analysis in the United States extending over a 4-week period.

The report is divided into four sections. Section I contains general information about the fertilizer supply situation in Colombia. Section II contains the analysis of the FERTICOL facility and the team's recommendations. Section III contains similar information for the bulk-blending plants. Section IV is a summary of miscellaneous activities in which the team participated.

Section I

GENERAL BACKGROUND

Nitrogen Supply

There are two nitrogen production units in operation in Colombia. One is the AMOCAR-ABOCOL plant at Cartagena. The AMOCAR facility, which is owned by Esso International, produces ammonia and nitric acid. These products are sold to ABOCOL (50% Esso International ownership) for producing urea and granular mixed fertilizers. The other is the FERTICOL plant at Barrancabermeja. This plant essentially is government owned. Sixty percent of the ownership is vested in government corporate agencies. The remaining portion is either owned by private individuals or other government agencies. FERTICOL produces ammonia, nitric acid, urea, and AN.

In addition, MONOMEROS is building a caprolactam facility at Barranquilla which will produce, as a byproduct, substantial tonnages of mixed fertilizers. This facility is scheduled to be completed late in 1970; it will produce 440-900 mt/day of mixed grades with high-nitrogen ratios (25-15-0, 20-20-0, 14-14-14). Other studies (1, 2) of the fertilizer industry in Colombia have indicated that adequate nitrogen production is already available to fill the needs through the 1970s (table 1).

P_2O_5 Supply

To date, supplies of phosphate rock suitable for use in production of high-analysis fertilizers have not been found in Colombia. For this reason, phosphate rock, phosphoric acid, triple superphosphate (TSP) (mainly run-of-pile), and small quantities of diammonium phosphate (DAP) are being imported.

There are several small normal superphosphate plants in Colombia with a combined annual output of less than 2,000 tons of P_2O_5. These plants use imported or domestically produced rock with spent sulfuric acid to produce a low-grade normal superphosphate (12-14% P_2O_5). In addition, COLMINAS has contracted to build a normal superphosphate (12-14% P_2O_5) plant near Turmeque with an annual capacity of 75,000 tons.

In spite of lack of adequate raw material resources, Colombia has production units installed or planned which will make available more than adequate supplies of mixed phosphatic fertilizers (table 2). If current plans for

Table 1. Estimated Availability and Production Capacity of Ammonia for Fertilizer Production in Colombia[a]

Producer	1967	1968	1969	1970	1971	1972
			1,000 mt			
Amocar	81[b]	85[b]	100	125	130	130
FERTICOL	–	5	12	15	20	20
Monomeros[c]	–	–	–	5	30	45
Total ammonia	81	90	112	145	180	195
Available nitrogen	66	74	92	119	148	160

[a]Estimates made by John Douglas, TVA, while studying Colombian fertilizer industry in June 1969.
[b]Part of this was exported.
[c]This plant is included as a basic producer since it will trade caprolactam for imported ammonia, thus increasing the supply of ammonia without using foreign exchange.

Table 2. Estimated Availability of P_2O_5 in Colombia[a], (Note: P_2O_5 Imported for Bulk Blending Not Included)

Product	Producer	Actual 1967	Actual 1968	Actual 1969	1970	1971	1972
					1,000 mt		
Escorial Thomas blast furnace slag	PAS DEL RIO	6.9	5.6	7.0	7.0	7.0	7.0
Ground phosphate rock	COLMINAS	–	0.8	4.0	4.0	4.0	4.0
Single superphosphate	COLMINAS	–	–	–	1.5	7.5	13.5
Mixed fertilizer	ABOCOL	19.4	20.3	22.4	24.0	26.0	29.0
Mixed fertilizer	MONOMEROS	–	–	–	1.0	13.6	27.2
Normal superphosphate	Various	2.0	1.7	2.0	2.0	2.0	2.0
Total		28.3	28.4	35.0	39.5	60.1	82.7

[a]Estimates made by John Douglas, TVA, while studying the Colombian fertilizer industry, June 1969. Imports are included in mixed fertilizer.

additional production facilities are carried out on schedule, Colombia will have an oversupply of phosphatic fertilizers throughout the early 1970s (1, 2).

K_2O Supply

Since no domestic supplies are available, all potash is imported.

Mixed Fertilizer Supply

There are three basic sources of mixed fertilizer in Colombia: ABOCOL, which uses imported phosphate rock in a nitric phosphate complex; SULFACIDOS, which uses imported intermediate materials to make a granular product; and 25-30 bulk-blend plants which physically mix imported intermediates. Capacity of the blend plants ranges from 100 to 60,000 metric tons per year (mt/yr).

Byproduct ammonium sulfate from MONOMEROS' caprolactam facility at Barranquilla, due onstream in late 1970, will be used in a modified Dutch State Mines sulfate recycle process to produce nitric phosphate. Phosphate rock, phosphoric acid, and potash for this complex will be imported. Caprolactam will be traded to Venezuela for ammonia to produce nitric acid and provide some ammoniation for the mixed fertilizers.

A quick look at production and importation of mixed fertilizer since 1963 suggests that there is more than sufficient capacity (including that under construction) to satisfy the likely demand for fertilizer during the 1970s (table 3).

Although the tonnage capacity seems to be sufficient for the 1970s, production of the grades needed may be difficult. As mentioned previously, MONOMEROS plans to produce grades with high $N:P_2O_5$ ratios. In contrast, I.C.A., the government experiment station, is recommending lower $N:P_2O_5$ ratios (table 4).

Visits and interviews were held with AMOCAR-ABOCOL, MONOMEROS, COLMINAS, FERTICOL, the CAJA AGRARIA, several blending plants, and other companies and institutions. A detailed description of the FERTICOL facility is included in Section II. Since the CAJA AGRARIA is such an important part of the fertilizer industry in Colombia, a brief discussion of it is included here. Reports of the discussions held with the others listed above are included in the appendix.

CAJA AGRARIA

The CAJA owns and operates four bulk-blending plants. Raw materials for the blending operations are either imported or purchased from FERTICOL, ABOCOL, and other domestic producers

Table 4. Fertilizer Ratios and Grades Recommended by I.C.A. for 1970

Ratio			Grade			Approximate
N	P_2O_5	K_2O	N	P_2O_5	K_2O	tons of demand
1	2	0.5	10	20	5	55,500
1	2	0.3	10	30	5	33,000
1	2	2	10	20	20	12,500
1	3	0	10	30	0	17,500
1	3	1	10	30	10	17,000
1	4	0.5	9	36	4	14,000
1	6	3	4	24	12	12,000
1	0.6	0	25	15	0	18,000
2	1	4	12	6	24	2,000

Table 3. Estimated Production of Mixed Fertilizers[a] (mt)

Year	Abocol	Caja	Sulfacidos	Quin	Monomeros	Subtotal	Other sources[b]	Total
1963	36,071	15,000	18,970	8,889	0	78,930	47,195	126,125
1964	96,386	31,749	29,657	2,847	0	160,639	46,307	206,946
1965	74,404	34,532	26,627	2,408	0	137,971	33,651	171,622
1966	82,536	52,361	36,202	3,714	0	200,520	29,043	229,563
1967	93,194	63,441	28,083	2,135	0	193,800	21,703	215,503
1968	104,393	66,751	32,386	2,621	0	206,191	27,297	233,448
1969	125,000	38,500	35,000	3,500	0	202,000	30,000	232,000
1970	125,000	80,000	45,000	4,000	18,000	272,000	50,000	322,000
1971	135,000	90,000	50,000	4,000	80,000	359,000	60,000	419,000
1972 On-ward	150,000	100,000	60,000	4,000	170,000	484,000	60,000	544,000

[a]Future production estimates made by John Douglas, TVA, while studying Colombia's fertilizer industry in June 1969. They are related more to actual capacity to produce than to projection of what will be produced. Production capacity should be reached by 1972 and therefore there should be no change in the years immediately following 1972.
[b]Mostly bulk blenders.

Also, the CAJA has contracted to sell all of the production of the FERTICOL facility for the year 1970. The greatest impact of the CAJA on the fertilizer industry in Colombia is in the area of credit. The CAJA is a government agency providing credit for the production of specific crops; it identifies the use of this credit for specific production purposes, i.e., seed, fertilizer, pesticides, etc. Often the farmer goes direct to the CAJA farm supply store to obtain these items. For this reason, the CAJA is the largest fertilizer distributor in Colombia.

Section II

FERTICOL

GENERAL BACKGROUND AND ANALYSIS

Twelve days were spent at the FERTICOL plant in Barrancabermeja studying the plant and analyzing the problems. A description of the plant will be given here, and a detailed analysis of the problems and possible technical alternatives will be given later.

Construction of the government-owned plant began in 1952 with the building of a housing complex, offices and laboratory, and other buildings. This was followed by actual plant construction. The project was not completed until 1962. CAJA AGRARIA is the largest single stockholder in this essentially government-owned plant.

The original plant was built by Montecatini and all units employed Montecatini processes. The plant consists of a 60-mt/day partial-oxidation ammonia unit, a 150-mt/day low-pressure nitric acid unit (150 mt/day of 54% HNO_3), a 30-mt/day partial-recycle urea plant with prilling facilities, and a 130-mt/day 26% N ammonium nitrate granulation unit. In addition, there is a power generating facility. Parts of the plant were obsolete by the time construction was finished in 1962.

The partial-oxidation ammonia unit was never operated successfully. The urea plant was operated at very low levels and was plagued with two problems, one of which was CO_2 purity. However, the major problem was one of design problems with the combination high-pressure decomposer-separator which was also an absorber. For this reason, attempts to operate the plant were abandoned in 1964 or 1965 and the plant was shut down.

In 1966 a decision was made to install a C and I/Girdler, Inc., prepackaged Amopac unit for ammonia and to have C and I modify the urea unit so that it could be operated. In May 1968 the plant came back onstream but was plagued with electrical difficulties. It was closed down again in September for three months to renovate the electrical facilities. Also, responsibility for the electrical generating facilities was transferred from the refinery to the FERTICOL manager.

The plant is currently being operated successfully despite some severe limitations caused by equipment deficiencies and the material balance. A brief description and analysis of problems with each of the units now operating follows.

Amopac Unit (Design capacity: 65 mt/day NH_3)

The Amopac is a C and I/Girdler prepackaged unit designed for natural gas reforming, high- and low-temperature shift conversion, monoethanolamine carbon dioxide removal, reciprocating compressors, and a high-pressure synthesis loop. The plant is currently operating at 60 mt/day with an onstream factor of 75%. The principal problems are associated with design of the gas turbines and the cooling water system for the turbines.

As a matter of interest, the synthesis gas compressor and synthesis loop of the old Montecatini unit appear to be in good condition. Plant personnel plan to make the necessary piping arrangements to test these in the near future.

Need——To improve the onstream factor to 85% and increase production per stream day.

Nitric Acid Unit (Design capacity: 154 mt/day of 54% Acid)

This unit is one of the original Montecatini units. It is in excellent mechanical condition. The process is low pressure with large water-sprayed drums for absorption. The plant operates well and is capable of operating at design capacity with 90-95% onstream factor. The only limitation now is ammonia availability.

The acid produced is clear in color and of high quality. Platinum catalyst losses are extremely low. The plant has the capability of producing at higher than design levels by addition of more catalyst and increased airflow.

Urea Unit (Design capacity: 60 mt/day)

Part of this unit is the original Montecatini unit and part is of C and I/Girdler design. The basic concept is partial recycle with off-gases used in an AN neutralizer. The ammonia and carbamate pumping systems and the reactor are all part of the original equipment. One of the original Worthington carbamate pumps is now used as an ammonia pump. The effluent from the reactor is split into two streams, one through the original Montecatini separation equipment and one through the new Girdler system (figure 1). Although the intention was to operate the two systems in parallel, operation of the Montecatini side still has not been successful. Each side was to produce 30 mt/day. The plant is currently operated at 50 mt/day utilizing the Girdler side only.

Separator pressures and temperatures are controlled to yield a solution of 80% urea concentration. Further concentration to 99.5% urea is accomplished in two-stage evaporation. The first stage is a vacuum concentrator and the second stage is an air-swept Whitlock falling film evaporator. The solution is then prilled in a stainless steel

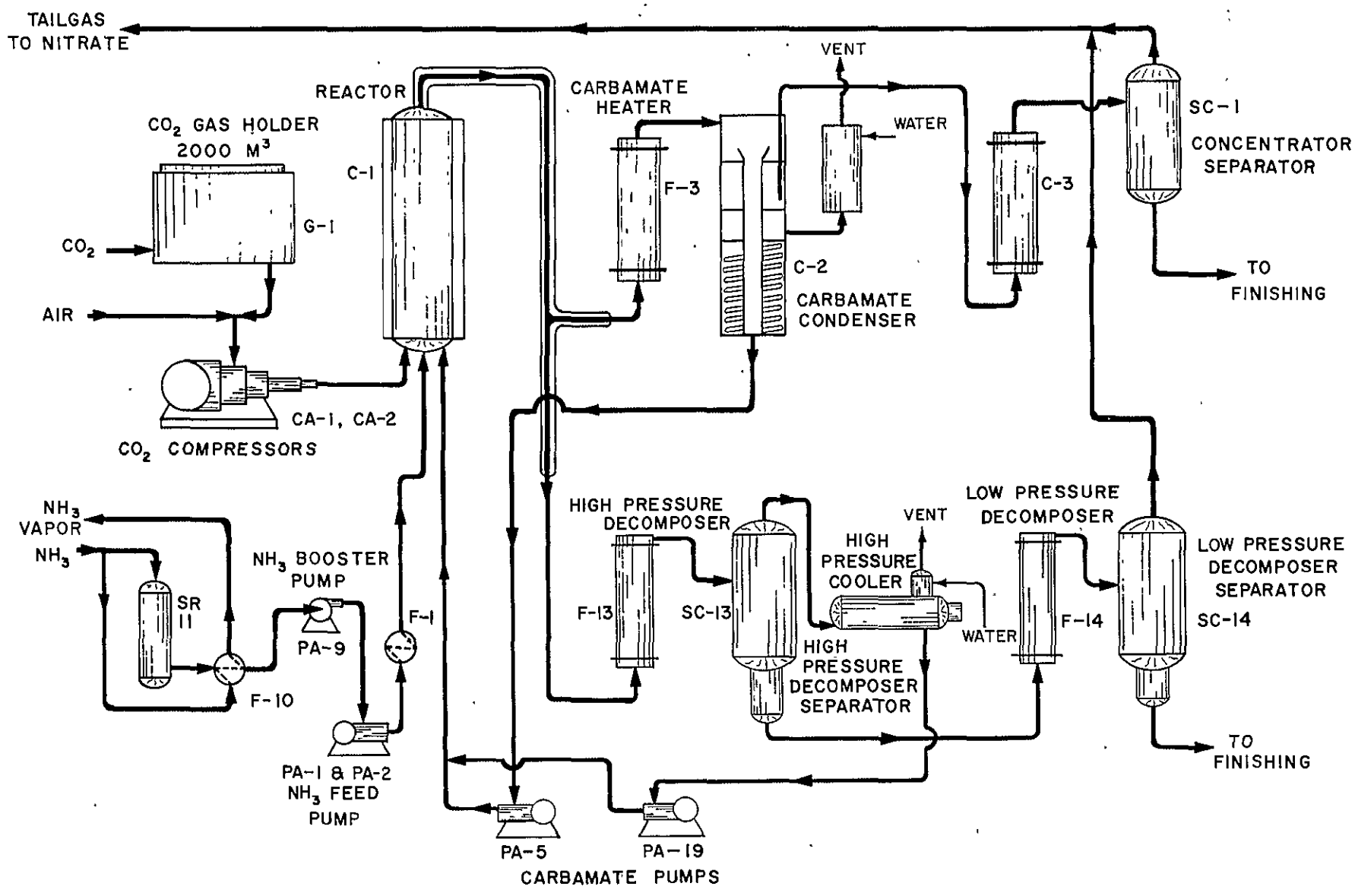

Figure 1. FERTICOL Urea Unit

rectangular tower. The prills are bagged in polyethylene-lined burlap bags. The polyethylene is heat sealed prior to sewing the burlap. The bagged material is stored in a large warehouse of brick construction.

The quality of the urea produced appears to be excellent. Biuret content is normally around 0.8% and seldom goes over 1.0%.

The onstream factor for the urea unit is about 70%. However, it cannot be operated continuously at a rate of 50 mt/day. At this rate, a large share of the byproduct ammonia from urea production, 0.254 ton/ton of urea, is contained in the off-gas. This ammonia must be neutralized with nitric acid. But there is not enough ammonia left to make the quantity of nitric acid required to neutralize the off-gas.

If enough ammonia were available, the plant still could not be operated at design rates because the Montecatini side is inoperable. The "culprit" here is the combination high-pressure separator and absorber which is all contained in the same vessel (figure 1). Level controllers on urea plant separators are considered to be problems. It is nearly impossible to control two levels in the same vessel; this is the case with the C-2 vessel.

A temporary malfunction of the urea solution level controller would allow urea to flow down into the carbamate condensation section. The urea would then "salt out" in the lower, colder section causing a plant outage of several hours' duration.

Needs—(a) Improve the onstream factor, (b) eliminate or reduce the ammonia in the off-gas, (c) make the Montecatini side operable, and (d) increase the production rate per stream day.

Twenty-Six Percent Ammonium Nitrate Unit
(Design Capacity: 130 mt/day of 26% ammonium nitrate)

The equipment in the AN unit is essentially all part of the original Montecatini system. A few small changes were made by C and I/Girdler including addition of a fluidized bed cooler.

AN solution of 83% concentration is prepared in the normal way by reacting 54% nitric acid vapor ammonia and urea plant tail gas. The rate of fresh ammonia addition is regulated by a pH control system.

The 83% solution is concentrated to 95% in an air-swept direct-heated evaporator. The evaporator is a tank type which is operated at atmospheric pressure. The evaporator overflows into a surge tank in which the pH is controlled by manual addition of ammonia. The 95% solution is transferred by pumps to pug mill-type granulators. The feed system consists of a solution recirculation system and drilled pipe spargers discharging into the falling recycle stream. The granulation mass from the pug mills flows through a chute into a rotary dryer.

The dryer effluent is transported by belt conveyor to a screen feed elevator. The undersize cut from the screens passes by means of a chute to a recycle belt. The oversize portion is fed to two roll crushers. The crushed oversize goes by chute back to the screen feed elevator.

Clay for dilution of the product to 26% nitrogen is metered directly onto the recycle belt.

The product fraction from the screens is fed by gravity into a fluidized bed cooler which discharges into a double-drum coater. The conditioning agent used is the same clay as used for dilution of the product. Conditioner level is 1.5%.

The coated product feeds by gravity into the boot of an elevator which discharges onto a belt conveyor to the bagging system. Automatic preweighing-type bagging machines are used to fill polyethylene-lined burlap bags. The polyethylene is heat sealed and the burlap is sewn. The material is hand stacked in a large warehouse of brick construction.

Dust from screens, crushers, cooler, dryer, and other equipment is collected in cyclones and fed back to the recycle belt. The airstreams from the cyclones discharge into a venturi-type wet scrubber. The scrubber liquor is recirculated and a portion is withdrawn to an open ditch to maintain the solids in the solution at an operable level.

Makeup solution to the scrubbers consists of condensate from process vessels. Fresh water is also required. This system is quite effective in controlling the overall dust level in the plant.

The onstream factor for this plant is 67%. Problems with plant equipment—particularly the pug mills, cooler, 95% solution pump, and roll crushers—cause extended outages and result in increased maintenance and overall production costs. The pug mill blades wear rapidly and must be repaired by laying on weld metal.

Product quality has been improved recently. Moisture level is controlled at 0.3-0.4%. However, the size distribution is still not good. The screening equipment in the unit is mechanically poor. The screen cloth now being used is not suitable from the standpoint of the type (longitudinal slotted) and the size being used. The wires spread easily allowing oversize material to enter the product fraction and product size to enter the recycle. Actual screen analyses bear this out (table 5).

Lack of demand for the 26% AN is a serious problem. Part of this lack of demand can be attributed to the extremely high selling price ($77/ton) resulting from excessive production costs. Some effort has been made to rectify this situation by lowering the price to the CAJA AGRARIA to a level competitive with urea. There is still serious doubt that the product can be sold at the lower price (2).

Needs—(a) Improve the onstream factor, (b) improve product quality, (c) lower maintenance costs, (d) maximize

Table 5. Screen Analyses, FERTICOL Ammonium Nitrate Plant

Screen size, mesh	Percent retained				
	Exit pug mill	Exit dryer	Recycle	Crusher In	Crusher Out
+4	13.0	18.8	1.9	46.0	23.6
+5	21.1	13.6	19.3	26.0	26.0
+8	42.8	38.6	52.6	7.4	19.7
+14	16.7	20.3	15.6	0.5	13.6
+16	2.1	3.3	2.6		3.2
+30	3.3	4.8	5.0	0.1	8.2
-30	1.0	0.6	3.0		5.7

urea production, and (e) find other outlets for the nitrate production.

Summary of Needed Improvements

A summary of the above problems as stated for each of the units points out the need to:

1. Improve the onstream factors in all units with the exception of nitric acid.
2. Improve the tonnage per stream day in all units with the exception of nitric acid.
3. Maximize urea production and minimize nitrate production. This includes lowering or eliminating the ammonia in the urea plant off-gas.
4. Shift the nitrate production to products that can be sold.

Nineteen case studies including calculations were made of various alternatives for solving the above-stated problems. Alternatives considered ranged from operating the entire plant as is with no changes to upgrading all units. Various combinations between these two extremes were studied. Installation of new ammonia facilities was also considered.

The ammonia-producing capacity could be doubled by purchasing the front-end section (gas preparation) of an Amopac unit identical to the one already in operation. The Montecatini synthesis section could be used with the Amopac front end. The total investment for this additional 65-70 mt/day of ammonia would amount to approximately US$1.3 million. This additional ammonia would have to be sold either as ammonia in competition with AMOCAR or as AN. The CAJA AGRARIA is unable to sell all the AN which FERTICOL now produces. AMOCAR can produce more ammonia than Colombia requires and at lower cost than FERTICOL. As previously discussed, Colombia has more than ample nitrogen capacity for the 1970s.

For these reasons, we feel that FERTICOL should not purchase additional ammonia facilities. Instead, a program should be undertaken to maximize the production rate of the present ammonia facilities and to upgrade all of the ammonia within the plant to products that can be marketed.

It would be impractical to present in this report the data and calculations from all the alternatives considered. Data necessary to support the recommendations made below are included.

RECOMMENDATIONS

Based on our findings, we feel that a three-phase improvement program for FERTICOL should be initiated. A discussion of each of the phases follows.

Phase I

Immediately

There are some things which should be done as soon as possible to improve the onstream factors and change the ratio of AN production to urea production. These are to:

I. Improve the onstream factor and overall operation of the AN plant by the following:

a. Stoodite coat the blades of the pug mill. (Details have been given to Mr. Orlando Pastrano, General Manager of FERTICOL.)

b. Raise the overall pH level in the pug mills. The low pH level of 5.0-5.3 is causing a faster-than-normal deterioration of the blades. The pH level should be raised to 5.8-6.0 by either putting more ammonia in the feed tank or by installing small ammonia spargers in the pug mills. A combination may be necessary to reach a pH level of 6.0

c. Improve the AN screening operation by changing the mesh size and type of screen. We recommend changing the size from 4-14 to 6-12 mesh and changing from longitudinal-slotted screens to cross-slotted screens. These changes have been discussed with plant management, which intends to try the new size and type screens.

d. Change to horizontal pumps for 95% AN solution feed and use the existing vertical pump as a spare. The management of the plant had already planned to do this prior to our visiting FERTICOL and the work is in progress.

2. Move the old Montecatini combination high-pressure separator-absorber vessel (C-2) in the urea plant to the low-pressure system. Modify the vessel and install it as a low-pressure absorber only (figure 2). This should reduce the ammonia in the off-gas from 0.264 ton NH_3/ton of urea to approximately 0.095.

Some piping rearrangement will be required (figure 2). The urea production rate with this modification should increase to about 55-57 mt/day. Following is an estimate of the necessary investment.

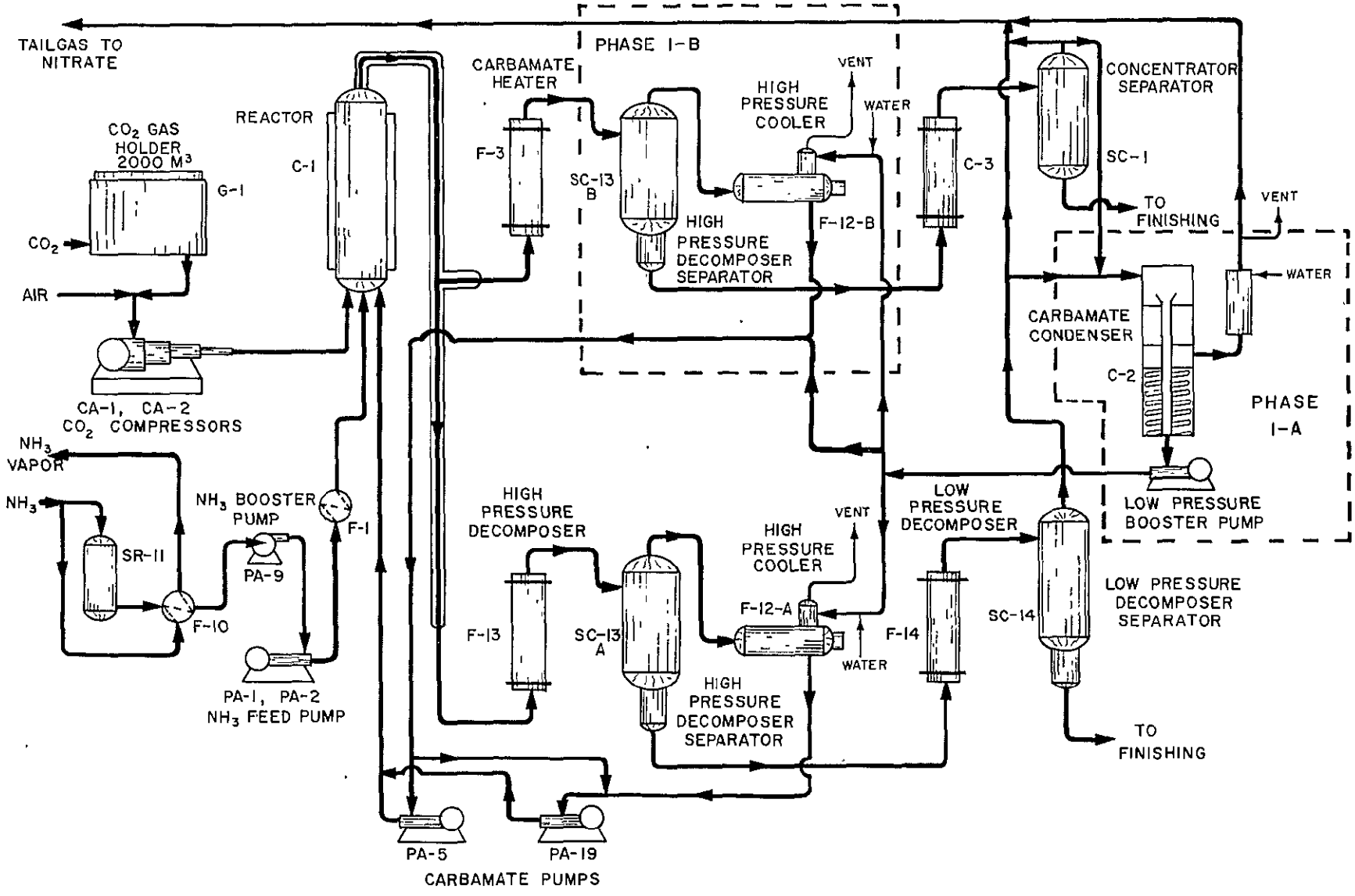

Figure 2. Proposed Modifications to FERTICOL Urea Unit

a. Small carbamate booster pump, 10-15 gallons per minute (gal/min) at 24 kilograms per square centimeter (kg/cm^2) gage discharge pressure $2,000
b. Cost of moving C-2 vessel as per FERTICOL $2,000
c. Repiping and valves $4,000
Total US$8,000

Cost data for producing a ton of urea with these modifications are shown in table A-1 (appendix). Using ammonia at US$45.94/ton, the cost for producing urea is US$65.98/ton.

Six Months to One Year

1. The White Superior Division, White Motor Corporation, manufacturer of the ammonia synthesis gas compressors, has agreed to furnish new parts to correct the design problems with the compressor gas engine drives. If the problems with the drives continue after the modifications are made conversion of the compressors to electric drives should be the next step. The Montecatini unit/compressor should be modified to permit its use as a spare. Plant personnel have already begun to formulate plans to accomplish these changes and some preliminary work has been started. More reliable synthesis gas compression must be realized if the plant is to produce consistently at the lowest possible cost.

2. A small ammonia recovery unit should be installed to recover ammonia from the flash and purge gases. After the problems with the synthesis gas compressors are resolved, the plant should be controlled to yield minimum purge rate. Theoretically, the aim for purge rate should be zero. This is not always possible, but it still should be the aim.

Accomplishment of 1 and 2 (above) should increase onstream factor to 85%and production rate to 70 mt/day.

The installed cost of the above modifications including new electric drives will be approximately US$130,000. Estimated cost data for producing a ton of ammonia after these modifications, are shown in table A-2. The cost per ton is US$45.94.

3. A 200,000-gal aluminum storage tank for storing 83% AN solution should be purchased. The installed cost of the tank with a pump for recirculation and bayonet-type heaters will be approximately $50,000. The tank will provide the flexibility necessary to operate the urea unit when the nitrate granulation unit is down. Installation of the tank will also be necessary to provide flexibility if the granulation facilities are converted to mixed grades.

4. A new high-pressure decomposer-separator (SC-13) and a new high-pressure cooler (F-12), each identical to the Girdler units now in operation, should be installed in the old Montecatini system of the urea unit. Figure 1 shows the location of these units in the old system. With these modifications and the above-mentioned modifications in the ammonia unit and the installation of an 83% solution tank, the urea plant onstream factor should be approximately 82% with a production rate of 62 mt/day. This rate appears to be the practical limit for the reactor size and carbamate pumping capability.

New investment costs follow:

High-pressure decomposer-separator	$ 6,100
High-pressure cooler	15,400
Level controllers	3,500
Piping	7,000
Total	US$32,000

The cost per ton for producing urea with these modifications is $64.18, table A-1. The ammonia cost used in the calculation was $45.94/ton.

Annual production tonnages, onstream factors, new investments, and costs were calculated for each of the products assuming that the changes and modifications outlined in Phase I (above) are accomplished. Table 6 contains a summary of these calculations. A comparison is also made with current conditions. Details of the calculations are included in tables A-1 and A-2.

Phase II—One Year

As previously discussed, there is a need to convert the AN production to products that can be marketed. In view of the poor quality of bulk-blended materials produced in Colombia (see Section III), it is our opinion that the AN granulation unit at FERTICOL should be modified for production of granular NPK grades of high quality.

The total new investment required for this conversion is approximately US$147,500. The new investment includes raw material handling facilities, raw material storage and feeding systems, new screening and crushing equipment, a new ammoniator-granulator, and a new cooler. Details are shown below in table 7.

Figures 3 and 4 show schematically one method of arranging equipment to accomplish the proposed modification. Figure 3 is an overall plot plan and figure 4 contains some detail of how the equipment could be arranged. These certainly are not intended to be design drawings but are intended to show schematically how the system could work and the basic equipment required. FERTICOL management can work out the details to best fit needs.

We do suggest that the ammoniator-granulator be installed in the space now occupied by the south pug mill. Also, the rotary cooler will fit into the open space south of the dryer and on the blunger floor level. This will allow the product cut from the screens to feed by gravity into the cooler.

The north pug mill should be left for granulation of AN if required. The pug mill should be modified to permit

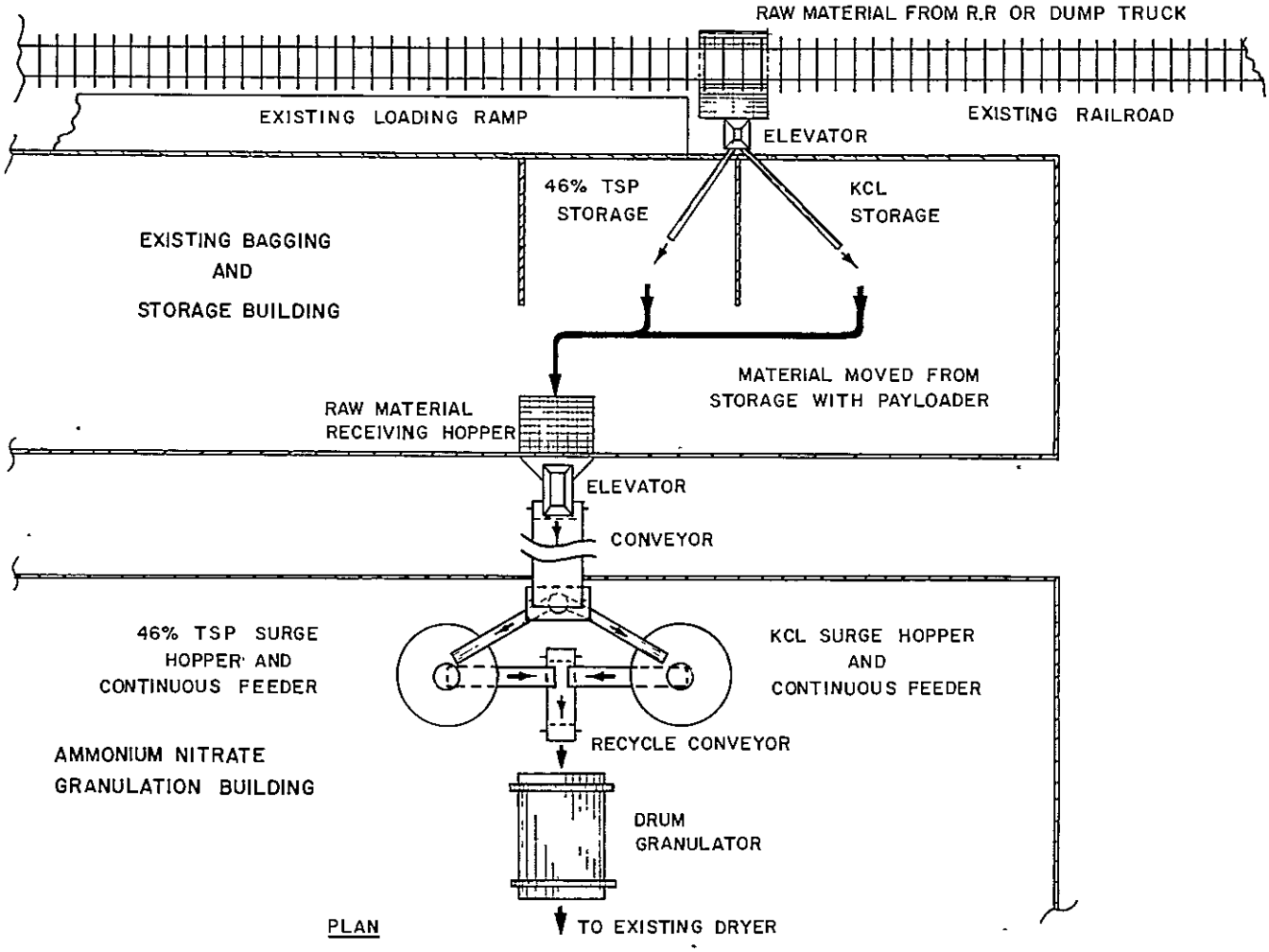

Figure 3. Proposed Bulk Handling of Raw Materials at FERTICOL

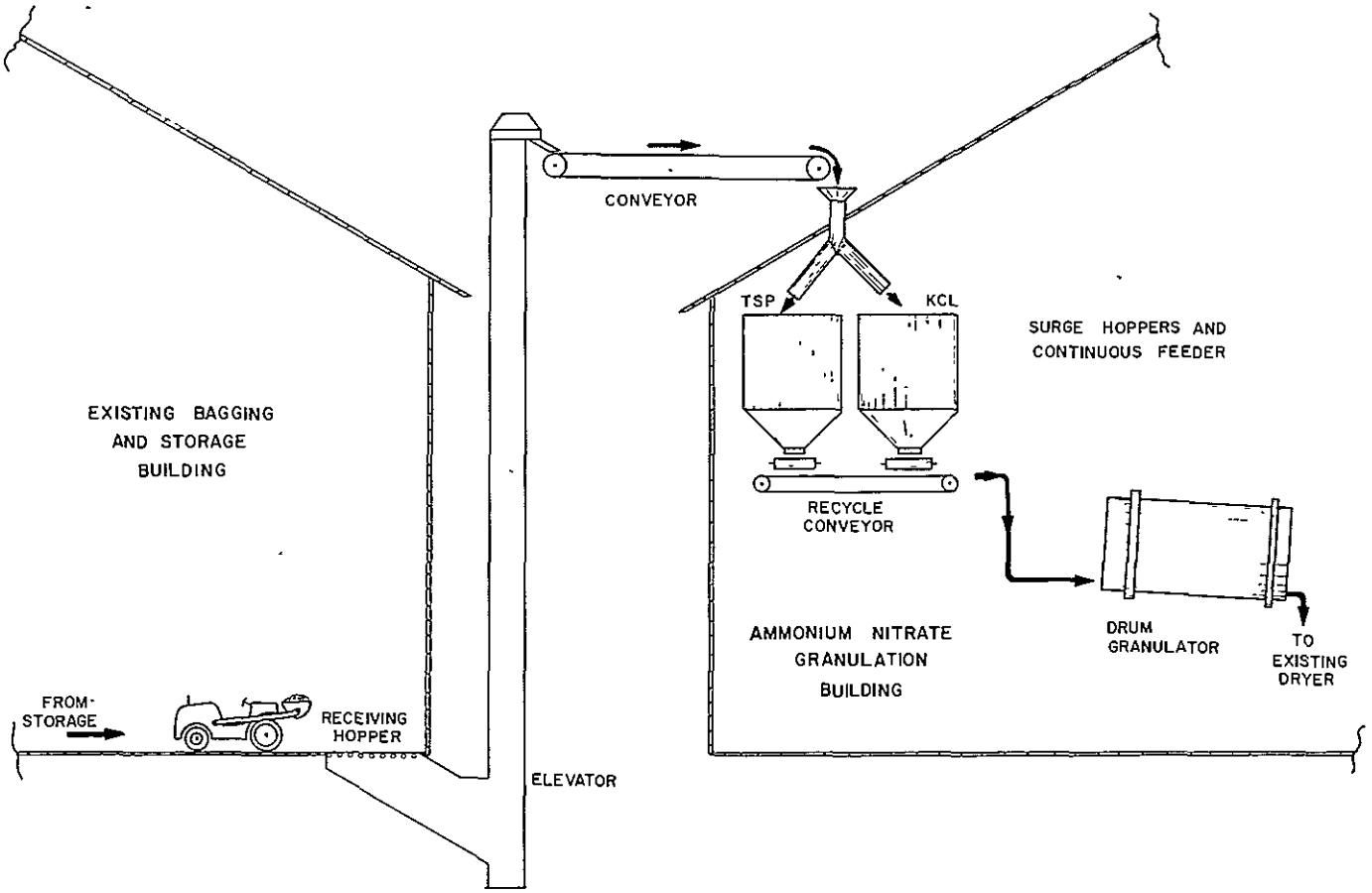

Figure 4. Elevation Detail of Proposed FERTICOL Bulk Handling Equipment

Table 6. Current Conditions vs. Phase I Conditions—FERTICOL Products

	Product	Ammonia	53% nitric acid	Urea, 80% soln. (100% basis)	Prilled urea, bagged	AN soln., 95% (100% basis)	AN granules, bagged (26% N)
Current[b]	Product, mt/yr	17,800	37,500	12,800	12,800	23,800	31,800
	Onstream factor	0.75	—[a]	0.70	0.70	0.67	0.67
	Costs—US$/mt						
	Variable	16.64	10.54	—[c]	60.66	—[c]	35.24
	Fixed	34.65	4.90	—[c]	14.32	—[c]	17.51
	Total	$51.29	$15.44	—[c]	$74.98	—[c]	$52.75
Phase I	New investment[d]	130,000[e]	0	40,000	0	50,000	0
	Production, mt/yr	21,700	30,100	18,500	18,500	18,950	25,500
	Onstream factor	0.85	—[a]	0.82	0.82	0.85	0.85
	Costs—US$/mt						
	Variable	16.35	9.80	30.37	54.26	36.38	32.64
	Fixed	29.59	6.08	15.32	9.92	6.06	17.50
	Total	$45.94	$15.88	$45.69	$64.18	$42.44	$50.14

[a]Nitric acid onstream factor is as required to a maximum of 0.95.
[b]Current conditions were calculated from data supplied by FERTICOL.
[c]Not now calculated
[d]New investments are shown in U. S. dollars.
[e]This investment includes $100,000 for electric drives for the synthesis gas compressors which will not be required if the present drives can be modified to give satisfactory service.

Table 7. Estimated Investment to Convert the FERTICOL Ammonium Nitrate Granulation Unit to Production of NPK Grades

Item	No. required	Estimated installed cost, US$
New rotary cooler (6′ x 30′)	1	35,000
New screens (Tyler Hummer, 4′ x 10′ deck)	2	30,000
New chain mills	2	16,000
TVA ammoniator-granulator (6′ x 12′, complete with drive motors and reciprocating scraper	1	29,000
Elevators	2	8,000
Hoppers, raw material	2	3,500
Feeders, raw material	2	5,000
Miscellaneous belt conveyors	—	15,000
Bulk storage conversion	—	6,000
Total installed costs		147,500[a]

[a]Does not include the cost of a payloader which may be required.

change-out of the shafts without removing the blades. The pug mill removed to make room for the ammoniator-granulator will provide a complete spare.

Production rates after the modifications should be approximately 300 mt/day for NPK grades and 240 mt/day for AN. The onstream factor should be about 85%.

Production of NPK grades of fertilizer by bulk blending of intermediates is a fairly simple operation which is widely practiced in Colombia (see Section III). However, production by bulk blending of products of consistent quality is more difficult. The blender's most troublesome problem is lack of uniformity in composition as a result of poor mixing or of segregation after mixing. Segregation of blended materials during handling is extreme when the materials differ greatly in particle size (4, 6).

Some have proposed that FERTICOL produces high-nitrogen grades that can be blended with run-of-pile (ROP) TSP and muriate of potash to yield NPK grades. For

the reasons discussed above, blending of granular products with ROP TSP and standard KCl would not yield a product of consistent quality. Therefore, we recommend that FERTICOL produce high quality granular NPK products that correspond to the grades recommended by I.C.A. (table 8).

The proposed modifications to the granulation section will provide sufficient flexibility for producing a wide variety of grades with $N:P_2O_5$ ratios of 3:1 down to ratios of 1:4. The ability to produce granular AN will also be retained.

Run-of-pile TSP and potash are currently being imported at Cartagena. The materials are bagged and shipped by rail or barge to the final destination. SULFACIDOS at Barrancabermeja receives the material by bulk barge. Should FERTICOL convert to granulation of NPK grades, imported raw materials could be received in Barrancabermeja by bulk rail or bulk barge.

The first part of table 8 lists several grades that could be produced and manufacturing costs that would result if the raw materials are received by bulk barge. The second part has the same information with manufacturing costs based on receiving of raw materials by bulk rail.

Calculations of grade formulations and costs are included in table A-3. A comparison (table 9) by grade was made of these manufacturing costs with the current selling price as published by the CAJA AGRARIA.

It is readily apparent that the materials should be competitive even after FERTICOL receives a fair profit. In addition, the materials would be granular homogeneous products of consistent quality.

Phase III—Long Range

Alternatives for better use of products of the FERTICOL plant included investigation of conversion of some of the output to liquids. Figure 5 is a schematic diagram of all alternatives considered including liquids.

Others had previously proposed production of a 41% nitrogen ammoniating solution. Solutions of this type

Table 9. Comparison of Manufacturing Costs of Grades Proposed for FERTICOL with Current Equivalent[a] Selling Prices at Bogota

Grade	Manufacturing cost, US$[b]	Current equivalent selling price US$
5-20-12	59.47	86.05
9-18-18	67 24	82.03
8-24-8	65.55	84.20
14-14-14	65.16	91.10

[a]Current equivalent selling prices were calculated from published CAJA prices for similar grades, f.o.b. Bogota.
[b]Taken from table 4. Freight from Barrancabermeja to Bogota added (table A-6).

Table 8. FERTICOL Grades and Manufacturing Costs

Product	Metric tons/day	On-stream factor	Raw materials cost—US$/ton (95% yield) NH_3	AN soln.	TSP	KCl	Total	Fixed[a] cost	Total mfg. cost
	Raw Materials Received in Bulk by Barge								
26% AN	240	0 85	—	31 50	—	—	31·50	13.74	45.24
5-20-12	300	0.85	0.50	5.23	25.05	9.31	40 09	12.55	52.64
9-18-18 (max. 1:2:2)	300	0.85	0.34	10.51	22.95	14.06	47.86	12.55	60.41
8-24-8 (max. 1:3:1)	300	0.85	0.43	9.21	30.32	6.21	46.17	12.55	58.72
19-19-0 (max 1:1·0)	300	0.85	0 41	23.37	23.79	—	47.57	12.55	60.12
14-14-14 (max. 1:1:1)	300	0.B5	0.29	17.07	17 58	10.84	45.78	12.55	58 33
8-24-12	300	0.85	0.44	7.95	30.11	9.28	47.78	12.55	60.33
	Raw Materials Received in Bulk by Rail								
5-20-12	300	0.85	0.50	5.23	27.37	10.34	43.44	12.55	55.99
9-18-18	300	0.85	0.34	10.51	24.84	15.53	51.22	12.55	63.77
8-24-8	300	0.85	0.43	9.21	32.95	6.93	49.52	12.55	62.07
19-19-0	300	0.85	0.41	23.37	25.84	—	49.62	12 55	62.17
14-14-14	300	0.B5	0.29	17.07	19.16	12.11	48.63	12.55	61.18
8-24-12	300	0.85	0.44	7.95	32.95	10.36	51.70	12.55	64.25

[a]Includes new investment of US$147,500.

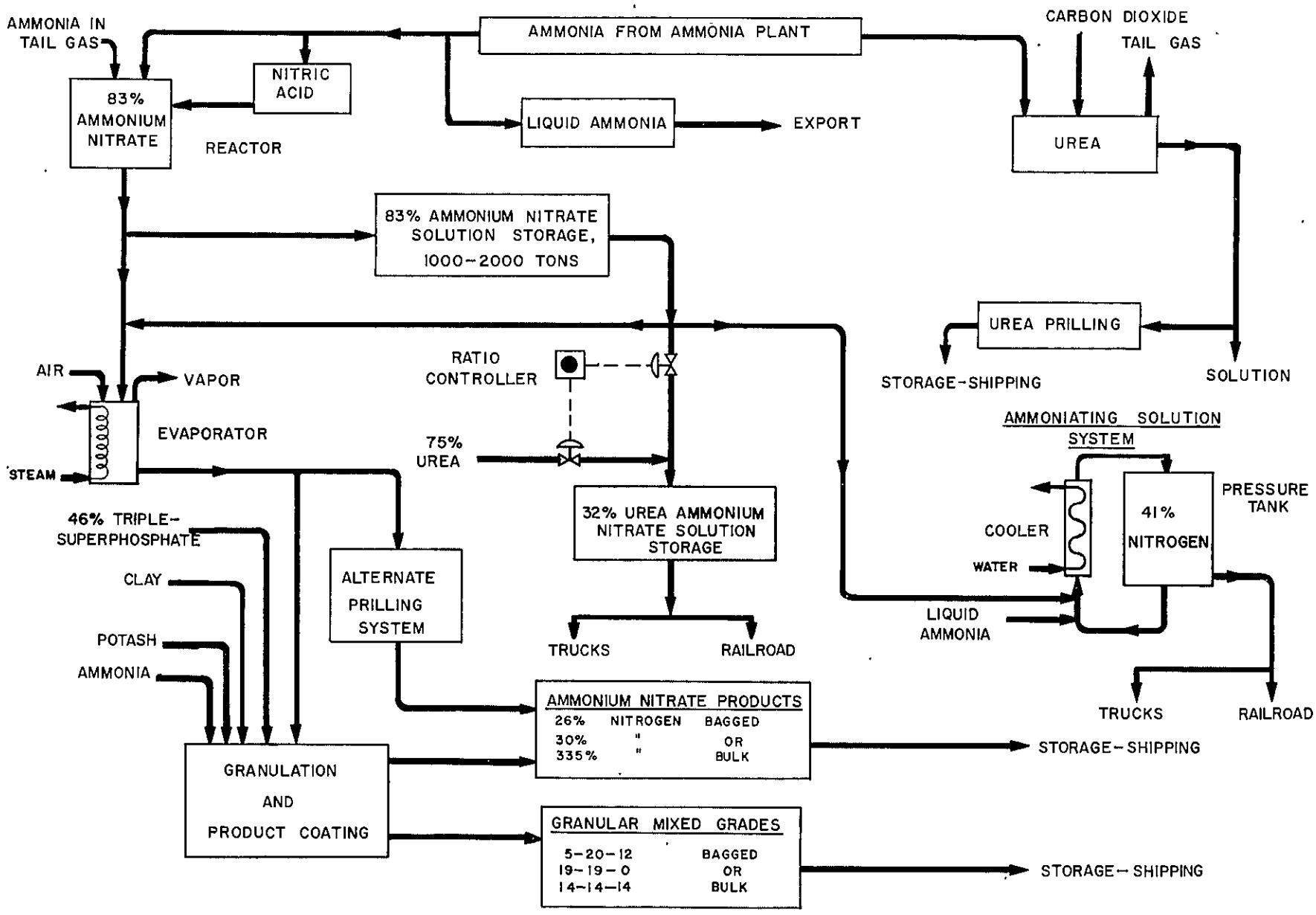

Figure 5. Possible Utilization Patterns for FERTICOL Ammonia

usually are used in granulation plants which ammoniate sulfuric or phosphoric acids. However, there will probably be a very limited market for this type solution in Colombia. For this reason we fail to see a need for production of ammoniating solutions.

Small urea plants in the United States similar to FERTICOL cannot compete with solid urea produced in large plants. However, they are used to produce urea for direct application solutions called urea - ammonium nitrate (UAN) solutions. The highest analysis solution of this type produced in the United States is a 32% nitrogen solution of the following composition and characteristics:

Free ammonia, %	Trace
Ammonium nitrate, %	44.3
Urea, %	35.4
Water, %	20.3
Total nitrogen, %	32.0
Specific gravity at 60° F.	1.327
Gage pressure at 104° F.	0
Approximate "salt out" temperature, ° F.	+32(0°C.)
Pounds per gallon (lbs/gal) at 60° F.	11.07

The important characteristic of this type solution is that it can be handled in nonpressure, carbon steel vessels. Small amounts of corrosion inhibitor are usually required. It can be transported in petroleum product-type tank cars and trucks. They can be the nonpressure type used to transport gasoline, diesel fuel, crude oil, etc.

Preparations should begin immediately to develop a market for this solution. The solution is normally applied to the soil using nurse tanks and spray nozzles. Also, in the U. S. it is metered directly into irrigation water systems. The solution can be temporarily mixed in the 41% solution system already existing at FERTICOL. On a long-range basis, facilities can be installed to produce and store this material for less than $20,000 (see figure 5). It can be stored in one of the old gas holders.

As future solid urea prices decline to a point below which FERTICOL prices are no longer competitive, the entire urea production can be diverted to this solution. When this time comes a new evaluation should be made of the possibility of additional ammonia facilities and of a shift in the mixed plant product mix.

General Comments

We were highly impressed with the caliber and technical competence of the FERTICOL staff. We believe that it is fully capable of expediting the changes proposed above. However, we do feel that it would be very desirable for some of the mechanical and technical personnel to visit TVA and other U. S. installations before undertaking modification of the granulation unit to produce NPK grades. They will be able to get a good feel of several different methods of accomplishing these modifications and to obtain a good understanding of quality products and quality control methods.

It is our opinion that Colombia should become more interested in production and distribution of high-quality products. Based on our observations, we believe that the FERTICOL organization is willing and capable of working in this direction. Quality is discussed in detail in Section III.

Section III

ANALYSIS OF PLANTS FOR PRODUCTION OF MIXED FERTILIZERS

During recent years, mixed grades have comprised about two-thirds of the total fertilizer production in Colombia. Mixed fertilizers, by definition, must contain at least two primary nutrients in definite predetermined proportions and may be in the form of either fluids, granular solids, or nongranular solids. Practically all mixed fertilizers used in Colombia are produced in the solid form. Most mixed grades are now produced in Colombia by chemical mixing (ABOCOL and SULFACIDOS), and by dry mixing or bulk blending (CAJA AGRARIA, SULFACIDOS, and other smaller mixing plants). The high-nitrogen grades usually are produced by ABOCOL and the low-nitrogen grades are produced in the various mixing plants. A new granulation (MONOMEROS) facility for production of compound mixed fertilizers is under construction.

Annual production of mixed fertilizers at ABOCOL has shown modest but steady increases each year since 1965 while production from the mixing plants has fluctuated during the same period and dropped significantly since 1968 (see figure A-1). Production of the 5-20-12 grade by the CAJA AGRARIA accounted for the greatest decrease in 1969 (table A-7). There have been numerous complaints about the quality of the products from the mixing plants; few of the product samples that were analyzed met minimum specifications for plant food content, and many of the products were in poor physical condition.

A study was made of the mixed fertilizer industry in Colombia with special emphasis placed on identification and solution of technical problems thought to exist in the various production facilities. Several mixed fertilizer plants were visited to observe raw materials, equipment, procedures, and practices used in the various plants and to evaluate the capability or potential of each plant for making high-quality products. The plants visited included both compound granulation facilities and mechanical mixing plants. The compound granulation plants (ABOCOL and MONOMEROS) are discussed in another section of this report. This section is concerned with the mechanical mixing plants which seem to be causing the greatest problems in the Colombian mixed fertilizer industry. A summary of the information obtained on the major mixing plants follows. The information obtained in the smaller mixing plants is summarized in the appendix. All prices are given in Colombian pesos except where otherwise noted.

SOLER PEDRO

This plant, located in Bogota, uses a tower-type blender. It was fabricated in Colombia, and workmanship appeared good. However, the method of operation is different from the TVA tower blender.

Raw materials are weighed (platform scales and bags of predetermined weight) and dumped into a floor-level hopper feeding the boot of an elevator. After the hopper is charged, the elevator is started and the material is carried into the top of the blending tower. It is recycled (through bypass to feed hopper) two or three times before it is discharged into a pit. No screens are used, and lumps are broken up by pounding with a shovel. We observed production of 8-24-14 mix. Mixing was poor, partly because of size distribution of raw materials, and partly because of method of operation. Better mixing is obtained in the TVA tower blender because *all* raw materials are elevated to a hopper at the top of the mixing tower, and the entire batch discharged simultaneously through a quick-opening trap door. In the SOLER PEDRO plant, the first materials charged to the hopper pass through the tower (and blend with themselves) before the last material from the feed hopper enters the blending tower, poor mixing is obtained, even with recirculation through the tower. The blending tower is not so efficient as mechanical mixers, such as a rotary mixer or a ribbon mixer, when comparable feed materials are used.

The manager of the mixing plant recognized the importance of raw material size uniformity on mixing efficiency. He said the tower was a "separator instead of a mixer" when the raw materials were not of uniform size. He said the farmers preferred pulverized material instead of granular because they felt the fine materials would dissolve faster. This argument would certainly be true of materials of low water solubility (such as ground phosphate rock), but would not be valid for soluble materials used in most formulations. SOLER PEDRO purchases raw materials from International Minerals and Chemicals Corporation (IMCC) and sells to some of the smaller mixing plants. The manager said he wanted pulverized 18-46-0, but it was not available. Powdered monoammonium phosphate (MINIFOS) is too expensive to use. It is about US$10/ton more expensive than a comparable conventional product.

The annual production at SOLER PEDRO has ranged from 18,000 tons down to 7,000 tons in recent years. The products are hand bagged and sewn with a portable sewing machine.

We were told at SOLER PEDRO that the bags cost about 2.5 pesos each. This is about one-half the price mentioned by others. The bags at SOLER PEDRO were plastic-lined burlap and appeared to be about the same quality as the more expensive bags. It was learned later that the bags were second hand.

Grades Made by SOLER PEDRO
(Costs in Colombian Dollars)

0-20-20	(kg)	Calculated grade: 0-21-21
TSP (0-46-0)	457	Selling price $1,500/ton
KCl (0-0-60)	350	Raw materials cost $1,200/ton
Sand	193	Markup 25%
	1,000	

5-12-18		Calculated grade: 5.8-13-19
DAP (18-46-0)	283	Selling price $1,340/ton
AN (26-0-0)	30	Raw materials cost $1,144/ton
KCl (0-0-60—	317	Markup 17%
Sand	370	
	1,000	

5-20-12		Calculated grade: 6-21-13
DAP (18-46-0)	335	Selling price $1,500/ton
TSP (0-46-0)	122	Raw materials cost $1,340/ton
KCl (0-0-60)	217	Markup 12%
Sand	326	
	1,000	

10-30-10		Cal. grade: 10.9-31.4-11.1
DAP (18-46-0)	610	Selling price $1,900/ton
TSP (0-46-0)	70	Raw materials cost $1,874/ton
KCl (0-0-60)	185	Markup 1.4%
Sand	135	
	1,000	

8-24-14		Calculated grade: 9-25.4-15.6
DAP (18-46-0)	500	Selling price $1,800/ton
TSP (0-46-0)	50	Raw materials cost $1,700/ton
KCl (0-0-60)	260	Markup 6%
Sand	190	
	1,000	

5-20-12		Calculated grade: 6-21-13
DAP (18-46-0)	335	Selling price $1,500/ton
TSP (0-46-0)	122	Raw materials cost $1,280/ton
KCl (0-0-60)	217	Markup 18%
Sand	326	
	1,000	

5-20-15		Calculated grade: 6.1-22.5-16.7
DAP (18-46-0)	340	Selling price $1,700/ton
TSP (0-46-0)	150	Raw materials cost $1,483/ton
KCl (0-0-60)	280	Markup 15%
Sand	230	
	1,000	

10-20-20		Calculated grade: 10-21.1-21.5
DAP (18-46-0)	460	Selling price $1,950/ton
Urea	70	Raw materials cost $1,846/ton
KCl (0-0-60)	360	Markup 5.5%
Sand	110	
	1,000	

5-20-20		Calculated grade: 5.5-20.5-21.5
Not now produced		

5-15-15		Calculated grade: 6.1-17-16.9
DAP (18-46-0)	340	Selling price $1,400/ton
TSP (0-46-0)	30	Raw materials cost $1,312/ton
KCl (0-0-60)	280	Markup 7.5%
Sand	350	
	1,000	

SULFACIDOS—Barrancabermeja

We visited the SULFACIDOS for a short period on February 25. The plant was not operating, but Camilo Karim, the plant manager, showed us the facilities. The plant consists of raw material storage (bulk), bagged product storage, a small sand dryer, dry-mix equipment and granulation (chemical mix) equipment. Although fairly new, the equipment did not appear to be properly maintained; the structural steel in the processing building, as well as the equipment, was badly corroded (rusted). Much of the equipment was of a good design and capable of producing quality products. Mr. Karim said SULFACIDOS had built some of the equipment.

Dry mixing (bulk blending)—The dry mixing plant consisted of an elevator, overhead cluster hoppers with weighing system, and a rotary mixer of approximately 1-ton capacity. The dry-mixing plant is of modern design and is capable of producing high-quality mixes, if proper raw materials are used. This section of the plant appears to be in good mechanical condition.

Granulation (chemical mix) section—The granulation section consists of elevators, overhead storage hoppers, batch weighers, nitrogen fertilizer solution tank, Ehrich mixer, two pan granulators, 6- by 30-foot (ft) rotary dryer, 6- by 30-ft rotary cooler, screens (obsolete type), crushing, and bagging equipment. The pan granulators are in good condition, but the Ehrich mixer is in poor condition. Mr. Karim said SULFACIDOS plans to replace the Ehrich mixer with a new rotary mixer. The crusher is a chain mill built by SULFACIDOS. The plant, built by a German firm, is only about five years old. It was originally fully automated; the automatic control equipment did not function properly, and was replaced with manual controls.

The plant requires ammoniating solution for good results when using 46% TSP as a raw material. SULFACIDOS has not been able to obtain ammoniating solution, and the products have had poor physical characteristics. They formerly used FERTICOL 26% AN as a source of nitrogen, but have discontinued the use of this material because the clay in the AN causes clogging of the piping. SULFACIDOS is now using dissolved urea as a source of nitrogen solution. The need for dissolving the urea is questionable, perhaps adding a small amount of DAP (to neutralize free acid in

the TSP), priced urea, and some source of heat (such as steam or an open flame onto the granulator bed) should be considered. The product should be well dryed, cooled, and coated prior to bagging. The granulation system appears to be capable of making 10 mt/hour (hr) of good quality granular fertilizer, if operated properly and the correct raw materials are used. FERTICOL would be a *convenient source of ammonia and AN solution if an equitable arrangement could be worked out between the two organizations.*

Bulk Storage of Raw Materials—SULFACIDOS has excellent storage facilities for about 1,000 tons (estimated) of bulk solids. Raw materials have been received by barge from the Caribbean coast, but the barges were not covered and the materials sometimes got wet from rain. The bulk material is transferred from the barge with payloaders into dump trucks and hauled to the plant. The freight cost by barge is estimated to be about one-half the cost of shipping by rail.

Bagged Product Storage—SULFACIDOS has excellent facilities for storing an estimated 3,000 tons of bagged product and for loading this material into railroad cars or motor trucks.

CAJA AGRARIA—Bogota

We were shown the CAJA AGRARIA mixing plant in Bogota by Pedro Acosta, Chief of CAJA Fertilizer Distribution Section. We observed the mixing operation and inspected the raw materials and mixed product, but did not make a detailed inspection of storage facilities.

The equipment consists of platform scales for weighing wheelbarrow loads of ingredients, an elevator, and a hopper which discharges into a rotary mixer. After mixing, the product was conveyed to a hopper and bagged. The bags were sewn, but the plastic liners were not heat-sealed. The raw materials come in bags which are cut open with a knife and dumped into wheelbarrows for weighing. The principal mix made in the Bogota plant is the 5-20-12 grade. The following formulation is the one given by the CAJA for making the 5-20-12 grade.

The grade calculated from formulation is 5-20-12 with no weight allowance for moisture in raw materials, error in analysis of raw materials, and errors in weighing raw materials. Therefore, it is unlikely that any batch would make grade, even with perfect mixing. Judging from the appearance of the observed mix, individual bags of material would be even less likely to be on grade.

Raw materials observed included:

1. *26% AN*—This material appeared to be in good condition except for size distribution. The particles ranged in size from dust to plus ¼-inch (in) pellets.

2. *Run-of-pile 46% TSP*—This material appeared fairly dry, but it ranged in size from large lumps to dust.

Formulation I
(Costs in Colombian Dollars)

Materials used	Amount, kilos	Unit cost, ton	Cost/ton, product
AN (26%)	193	$ 1,442.00	278.31
TSP (0-46-0)	435	1,339.00	582.47
KCl (0-0-60)	200	907.30	186.46
Sand (0-0-0)	172	51.60	8.88
	1,000		
Total cost of raw material			1,051.12
Other costs: Includes bags and bagging, cost of mixing, and interest on inventory			310.36
Total production cost			1,361.48
F.o.b. Bogota selling price			$1,480/mt

3. *Muriate of potash*—Of small particle size that looked moist and contained lumps.

4. *Sand*—Quite moist.

5. *Granular DAP*—This material had obviously been wet; the surfaces of the granules were decrepitating and lumps were present in the bags.

The product was poorly mixed, largely because of the unmatched sizes of the raw materials; the smaller particles were segregated from the larger particles, and the mixture was not homogeneous. There appeared to be enough moisture in the mixture to cause it to cake even under good storage conditions. Also, the bags were stacked about 32-40 bags high which would cause "pressure caking" of materials that otherwise were in good condition. The maximum recommended bag stacking height is 20 bags.

Although the CAJA has 26% AN available, it apparently still uses DAP in the formulation. DAP and TSP are chemically incompatible; the DAP ammoniates monocalcium phosphate and free acid in superphosphate, providing liquid phase and crystalline changes on granule surfaces, resulting in caking. It is suspected that the CAJA uses DAP instead of FERTICOL AN because the DAP gives a lower cost mix than can be obtained when using AN at former inflated prices. This allows a larger profit for the CAJA as illustrated by the following costs:

Cost of DAP
(Costs in Colombian Dollars)
(Calculated from information given by Pedro Acosta)

	Product
DAP—F.o.b. Cartagena US$60.50	$1,090
Bagging labor	60
Bags	105
Transportation to Bogota	238
Labor moving matl. to whse.	100
Bagged DAP cost in Bogota	$1,593

(Calculated from information given by Pedro Acosta)
Formulation II
(Costs in Colombian Dollars)

Caja Formulation Using DAP and AN for 5-20-12

Materials used	Amount	Unit cost	Cost/ton, product
AN (26%)	100	1,442.00	144.20
DAP	136	1,593.00	217.00
TSP (46%)	300	1,339.00	403.00
KCl (60%)	200	907.30	181.00
Sand	264	51.60	14.00
	1,000		
Total raw material costs			$ 959.20
Fixed costs			310.24
Total cost in Bogota			$1,269.44

This formulation would be $1361.48 – 1269.44 = $92.04 cheaper than Formulation I using only FERTICOL AN as a source of nitrogen.

The 5-20-12 grade can also be formulated with DAP being used as the sole source of nitrogen as follows:

Formulation III
(Costs in Colombian dollars)

Material	Amount	Unit cost	Cost/ton, Product
DAP	278	1,593.00	445.00
TSP (46%)	156	1,339.00	208.00
KCl (60%)	200	907.50	181.00
Sand	366	51.60	19.00
	1,000		
Total raw material cost			$ 853.00
Fixed costs			310.24
Grand total			$1,163.24

This formulation would be $1361.48–1163.24 = $198.24 cheaper than using formulation with AN as source of all nitrogen. If the current AN price ($1022/ton vs. $1442/ton used in cost data) is used, the cost of Formulation I would be reduced by $93/ton and cost of Formulation II would be reduced by $49/ton. Any cost reductions achieved by reduced costs of raw materials or formulation changes should justify a similar reduction in the retail price of the product. We do not have evidence that this is being done.

The CAJA is thinking of installing a granulation plant at Bogota. Solid raw material would be imported, and nitrogen solutions (either ammoniating solution or separate supplies of ammonia and AN solution) would be shipped from FERTICOL in Barrancabermeja. A bid of US$117,000 has been received from an engineering firm in the States for the basic granulation equipment. A TVA ammoniator-granulator would be used. This price does not include the following:

1. Engineering and delivery cost of about 20%.
2. Installation cost, estimated at 25% of equipment cost.
3. Utilities such as electrical substation, steam generator, and air compressors.
4. Storage facilities for ammonia, ammoniating solution, and AN solution.
5. Bulk-handling and storage facilities for solid raw materials.
6. Improved bagging and bag sealing equipment.

The estimated cost for this facility is as follows.

Item	Estimated cost, US$
1. and 2.—Installed cost of basic equipment	169,000
3.—Utilities (installed equipment)	125,000
4.—Storage, gaseous and liquid raw materials	75,000
5.—Bulk solid raw materials, storage, and handling facilities	60,000
6.—Cost of improved bagging equipment and bag sealer	25,000
Total estimated cost of plant	454,000[a]

[a]This does not include the cost of the building for the granulation plant It was assumed that an existing building could be utilized.

No provisions have been made for coating the products with a conditioning agent. Investment for conditioner unloading and storage facilities, conveying system, metering system, and coating drum would cost at least $75,000. This would give a total investment in excess of US$500,000 for a plant producing good quality products at Bogota. This plant should be capable of producing 12-14 mt/hr of granular fertilizer.[2]

CAJA AGRARIA—Cali

We did not visit the CAJA plant at Cali but were given a brief description of it by Pedro Acosta. The existing plant consists of elevators, screens, hoppers, Ehrich mixer, and deep pan granulators. Only limited quantities of dry mixes have been produced in this plant. Mr. Acosta says the CAJA plans to buy dryers, coolers, crushers, and conveying equipment to convert the facility into a granulation plant. The plant would then be *essentially* the same as the SULFACIDOS plant in Barrancabermeja. Mr. Acosta said the basic equipment required would cost US$51,000 f.o.b. United States. Total cost for the plant would depend

[a]Inflation may increase the cost of construction by as much as 10-15% per year. Construction cost estimates must be updated to allow for inflation.

largely upon facilities and utilities already available at the plant site and could range from a minimum of US$85,000 to a maximum of around US$300,000. The facility would have a production capability of 8-10 mt/operating hr. Mr. Acosta said an 8-24-14 grade was planned for the plant. Raw materials would include imported muriate of potash, 46% TSP, and nitrogen in the form of solutions from the FERTICOL plant. Some of the 46% TSP will be exchanged with QUIN for 14% normal superphosphate. The normal superphosphate will be used to adjust the P_2O_5 content of the products without using sand as a filler.

SUMMARY AND ADDITIONAL COMMENTS

Raw Materials

None of the fertilizer mixing plants we visited were making products of good quality in terms of good physical condition and uniform nutrient composition; all plants used raw material of nonuniform particle size. Because of the nonuniformity in feed materials, it is impossible to obtain a homogeneous mixture by any of the mixing procedures we observed. Also, damp raw materials were observed at several plants and most of the companies we visited had one or more formulations in which chemically incompatible raw materials were used. In order to obtain quality products from dry mix plants, it is essential that the raw materials have the following characteristics:

1. Be of uniform particle size.
2. Be dry and free flowing.
3. Be chemically compatible

Common raw materials that are chemically incompatible are AN - urea, urea-superphosphates, and DAP - superphosphate mixtures. Preammoniation of normal or triple superphosphates will permit them to be used in dry mixes with either urea or DAP.

Equipment Used (Dry Mix or Bulk Blending)

Rotary mixers were seen at the following plants: CAJA AGRARIA in Bogota, SULFACIDOS in Barrancabermeja, Deposito del Agricultura Ltda. in Bogota, and Abono Quimico AGRIFOS in Bogota. Rotary mixers are the type usually used in bulk-blending plants in the States and are capable of producing satisfactory mixes if the raw materials are dry and are of uniform particle size. The raw materials must be chemically compatible to ensure good storage properties.

Vertical screw mixers were seen at ABONOS FORTUNA and ABONOS EXCELSION in Bogota. Screw mixers are quite efficient if uniform quality raw materials are fed to the screw at a uniform rate and at the approximate proportions desired in the final mix. It is unlikely that the raw materials are fed in such a manner to the mixers we saw; the feed hopper was of limited capacity and would hold only about one bag of material at a time. The feed materials should be premixed before charging to the machine.

A *horizontal cylinder* containing a single shaft equipped with mixing blades was seen at HUERTA in Bogota. This mixer did not appear to be of such a design that would provide efficient mixing.

Vertical mixing towers were seen at the HERNANDEZ CARLOS and SOLER PEDRO mixing plants in Bogota. Mixing towers do not provide efficient mixing under best conditions of operation with feed materials of uniform size. It would be next to impossible to obtain mixes of uniform composition from a mixing tower when charged with nonuniform feed materials and operated in the manner we observed at the SOLER PEDRO plant. Better mixes probably could be obtained if the feed hoppers were divided into four separate compartments and each raw material charged into a single compartment. This would allow the different raw materials to be fed simultaneously into the elevator feeding the tower mixer.

Ehrich pan mixers are installed in the SULFACIDOS plant at Barrancabermeja and the CAJA AGRARIA plant at Cali. Ehrich mixers are normally used to prepare wet mixes for further processing but would probably give good dry mixes if raw materials of satisfactory quality were used.

Hand mixing with shovels on floor is a highly inefficient method of mixing fertilizer, especially in batches as large as we observed at the HUERTA and Deposito del Agricultura Ltda. plants. It is possible, but highly improbable, to obtain good mixes even when the batch sizes are limited to only 200-300 lbs.

Wet-Mix Plants

SULFACIDOS—Although poorly maintained, the SULFACIDOS wet-mix plant at Barrancabermeja can be utilized to produce good quality products if ammonia and nitrogen solutions were available. Technical supervision is competent if properly oriented; accessibility to bulk shipments of raw materials by barge should allow production costs to be reasonably low.

CAJA AGRARIA—Plant at Cali should be about equal to the SULFACIDOS plant in production potential after proposed plant modifications and additions are made. However, production costs at Cali probably will be higher than at SULFACIDOS because of increased shipping costs of raw materials.

The proposed new CAJA AGRARIA granulation plant at Bogota is a question mark since complete specifications of the new plant were not made available to us. Justification for the new plant is also questionable since investment costs for a *complete plant* at Bogota would be

much greater than the cost of modifying the FERTICOL plant, and shipping charges for imported raw materials would be higher at Bogota than at Barrancabermeja. Also ammonia and AN solutions required for production of a good product are produced at FERTICOL and would have to be shipped to Bogota.

Quality Control of Mixing Plant Products

The fertilizer mixing plants that were visited in Colombia did not emphasize product quality control in their operations. Very few of the plants were making products that could be considered of high quality by U. S. standards. The products were deficient in either physical properties, nutrient content, or uniformity of mix. Some of the plant operators seemed unaware of the fact that their products were of inferior quality. Others were knowledgeable of fertilizer quality but for various reasons were not making good-quality products. The following practices contributing to poor quality products were observed in the various mixing plants.

1. Use of raw materials that were incompatible in respect to particle size and chemical composition.
2. Use of raw materials with high moisture content.
3. Use of inadequate mixing equipment.
4. Improper operation of mixing equipment.
5. Improper packaging of product.
6. "Skimpy" use of raw materials in formulations.
7. Improper storage of products.

Economic considerations, availability of proper raw materials, and ignorance of fertilizer quality on the part of producers and users appear to be the principal reasons for production of inferior products in the Colombian mixing plants. A comprehensive educational program on fertilizer production and use is badly needed in Colombia. Also fertilizer quality control standards should be established and enforced as a follow-up to the educational program.

Mixed Fertilizer Prices

Prices of fertilizers to farmers in Colombia generally are set by large distributors such as the CAJA AGRARIA. The wholesale prices of fertilizer materials produced in Colombia are established by a bargaining procedure between CAJA AGRARIA and the basic producers, FERTICOL and ABOCOL; other wholesale distributors usually sell at the prices negotiated by the CAJA. Retail prices usually are based on wholesale delivered costs of raw materials delivered to the mixing plant plus mixing, packaging, transportation and handling costs, and a markup for profit. According to information obtained from some of the mixing plants, the markups range from about 1.5 to around 20%. The indicated price markups were reasonable and the prices charged for most grades were only slightly higher than those paid by U. S. farmers for equivalent grades (see tables A-8 and A-9); exceptions include AN produced at FERTICOL, imported DAP, and the 5-20-12 grade produced by the CAJA AGRARIA. The price of AN has recently been reduced to a level competitive with urea, but DAP sold by independent importers is priced much too high. Based on information obtained from the CAJA, depressed market DAP can be delivered in bags to Bogota at around $1,600/ton, while the price paid by some of the small mixing plants was reported to be around $2,450/ton. Since DAP is utilized extensively in formulations used at the smaller mixing plants, reducing the price of this material to a reasonable level would substantially reduce the cost of many of the mixed grades. Also, cost estimates indicate that good-quality granular 5-20-12 and similar grades can be produced at FERTICOL appreciably cheaper than they are now being produced in the mixing plants. Appropriate changes in raw material costs and system of operation should provide the Colombian farmer with high-quality products at a lower price than he is now paying for inferior products.

Mixing Plants—Conclusions and Recommendations

The recent "slump" in production and sales of mixing plant products in Colombia is due mainly to the poor quality of the products and, to a lesser extent, the prices charged for the products. Some of the producers and users have misconceptions concerning fertilizer quality and should be educated on the subject. Fertilizers of good quality can be produced and marketed in Colombia at lower prices than are now being paid for inferior products. This can be accomplished by using compatible raw materials, exercising better controls over prices of some raw materials, and by changing production methods for some grades. Also, the wholesale distributors of fertilizers should limit their activities to promotion, sales, and credit services and discontinue operation of mixing plants. Specific recommendations for the Colombian mixed fertilizer industry are as follows.

1. Initiate a comprehensive education and training program on fertilizer production and use for mixing plant operators and farmers. This program should include use of printed materials, such as cited in the "References," use of filmstrips similar to the ones used at TVA, increased use of demonstration plots, and possible distribution of small quantities of high-quality fertilizer for individual farm testing. It is recommended that key personnel involved in the fertilizer education program visit TVA and talk with specialists in fertilizer education and promotion programs before the Colombian program gets underway.
2. Reorganize the fertilizer quality control program in

Colombia and put it on a realistic basis. Quality control standards should be geared to the technical capability of the Colombian fertilizer industry and upgraded periodically to keep in step with the ability of the fertilizer industry to produce high-quality materials. Most of all, quality control standards should be fairly and rigidly enforced. Penalties assessed against the selling price of inferior fertilizers would be the quickest and most positive method of improving the quality of fertilizers.

3. Eliminate operation of the CAJA AGRARIA mixing plant in Bogota as soon as the FERTICOL plant is modified to produce granular low-nitrogen grades and in regular production. The CAJA should function as a fertilizer distribution agency and not as a major producer of fertilizer.
4. Allow the smaller mixing plants capable of producing good-quality products to make the low-tonnage specialty grades required in Colombia. Initially, the smaller plants should eliminate the use of sand as a filler and use raw materials on hand to make the desired nutrient ratios. The formulations should be altered to eliminate the use of chemically incompatible raw materials in the mixes. Raw materials purchased for future use should be granular. Prices of the granular mixes should be adjusted to compensate for higher cost granular raw materials. The mixing plant operators should use only dry materials in the mixes.
5. Regulate prices on imported materials such as DAP in order for the mixing plants to obtain these materials at reasonable costs.
6. Allow SULFACIDOS to obtain ammonia or ammoniating solutions at a reasonable cost. FERTICOL should be the logical supplier of these materials to SULFACIDOS for the immediate future. SULFACIDOS should granulate predominantly low-nitrogen grades until the proposed FERTICOL granulation plant is in operation.
7. Allow ABOCOL and MONOMEROS (when in operation) to supply the predominantly high-nitrogen mixed grades used in Colombia.
8. A modern fertilizer bulk-blending program should be developed when the fertilizer industry in Colombia becomes more sophisticated and a fluid fertilizer program is developed to utilize the nitrogen output from FERTICOL. In the later program, high-nitrogen N-P intermediates would be produced by ABOCOL and MONOMEROS and blended with granular potash and granular phosphatic materials in modern bulk-blending facilities to make a wide variety of high-quality mixed grades.

Section IV

MISCELLANEOUS ACTIVITIES

In addition to performing the primary assignment in Colombia, the technical team participated in conferences with several groups in Colombia and provided direct technical assistance to some of the plants visited. Personnel and organizations contacted during the visit are listed in the appendix.

One meeting in which the team participated was a conference with personnel from the Colombian Ministry of Agriculture and COLMINAS. COLMINAS, a phosphate rock mining and grinding company, was requesting a license to build and operate a 14% single superphosphate plant near Turmeque. The Ministry of Agriculture had previously refused to approve the plant because of the low P_2O_5 content and high unit cost of the proposed products. COLMINAS personnel reviewed the project and gave a revised estimate of the cost of production in the new facility. The revised costs were still much higher per unit of P_2O_5 than the cost of imported 46% TSP. Also, it was brought out that little was known about the character of the rock to be used except a few samples had analyzed about 20% P_2O_5. The Ministry of Agriculture again refused to license the plant for operation. In a later discussion with Mr. James B. Cathcart, Geologist with the Inter-American Geodetic Survey Group, we learned that very little is now known about the phosphate deposits in Colombia. Mr. Cathcart's group is now starting to core drill the known phosphate deposits in Colombia in order to evaluate them. Future development of the phosphate industry in Colombia will depend largely on the quantity and quality of phosphate ores found in Colombia.

REFERENCES

1. Douglas, John R., Jr., and W. C. Scott, Jr. 1969. Trip Report-Bogota, Colombia–June 1969.
2. Gregory, Wade (chief, USDA/AID PASA team, Bogota, Colombia). Personal communications.
3. Hoffmeister, George. 1967. Bulk Blending Practices and Problems: A Brief Resume. Report S-426, Tennessee Valley Authority, Muscle Shoals, Alabama.
4. _____. 1965. How to Avoid Segregation in Bulk Blended Fertilizer Materials. *Agr. Chem.* (February 1965) (TVA reprint CD-393).
5. _____, S. C. Watkins and J. Silverburg. 1964. Bulk Blending of Fertilizer Material: Effect of Size, Shape and Density on Segregation. *J. Food and Agr. Chem.* 12:64-69 (TVA reprint CD-354).
6. Hignett, T. P. 1965. Bulk Blending of Fertilisers· Practices and Problems *The Fertiliser Society Proc.*, No. 87 (London) (TVA reprint CD-408).

APPENDIX

AMOCAR–ABOCOL COMPLEX AT CARTAGENA

This complex was originally built and wholly owned by Esso International, Inc. It is comprised of ammonia and nitric acid units which are located within the Esso refinery at Cartagena and urea and mixed fertilizer units which are located on adjacent property.

Recent changes in ownership have taken place. ABOCOL is now a separate corporation with Esso owning 50% of the stock. It purchases nitric acid and ammonia from AMOCAR (Esso) for production of urea and a variety of mixed fertilizers. The plant also imports phosphoric acid, phosphate rock, TSP, and potash (KCl and K_2SO_4). A brief description of each of the units follows.

AMOCAR

Persons talked with included Mr. Martin H. King, General Manager of the entire operation including the refinery, ammonia-nitric acid complex, and the pipeline which brings crude oil from the interior of the country. Mr. John Every, Superintendent of Ammonia and Nitric Acid, and his staff discussed details of the units with us and escorted us through the plant.

Ammonia Unit

This unit is a typical C and I/Girdler reforming plant with a high-pressure synthesis loop [5,000 pounds per square inch gage (psig)]. It was originally designed to produce 295 mt/day utilizing refinery off-gas. Carbon dioxide removal is accomplished in a two-stage monoethanolamine system and CO conversion is carried out with two-stage, high-temperature shift conversion catalyst. Carbon monoxide leakage is currently averaging 0.3% without the use of low-temperature shift catalyst.

The synthesis loop section consists of three d.c. electrical-driven, reciprocating compressors with integral recirculation blocks and a quench-type converter. There is also a small unit for recovering ammonia from the flash and purge gases.

Rated capacity has been increased stepwise to 390 mt/day. Part of the increase was a result of changing from a feedstock of refinery gas to natural gas. Changes in heat exchange equipment and the overall heat balance account for the balance of the increase.

AMOCAR plans to continue to operate the plant as is with the exception of possibly installing a low-temperature shift conversion step. The rated capacity of the plant will be approximately 400 mt/day with this change.

The plant is now operating at 340 mt/day with the limitation being a leak from the cold side to the hot side in the synthesis converter. This appears to be a more than ample production rate since the storage tanks are full and AMOCAR is exporting ammonia to reduce inventory levels. The plant appeared to be very well maintained and should be capable of producing low-cost ammonia for several years to come.

Natural gas cost is currently 2.78 pesos (US$0.150/MSCF) with an increase to 3.70 pesos (US$0.210/MSCF) expected in the very near future.

Nitric Acid Unit

This unit was also C and I/Girdler designed and built and is a typical medium-pressure unit. The Brown Bovari air compressor is also used to supply a portion of the process air to the ammonia unit secondary reformer. The cooler condensers are cascade type. Design capacity is 150 mt/day which is much more than the requirement of ABOCOL. The unit was not running during our visit because of lack of demand from ABOCOL.

ABOCOL

Persons talked with were Mr. Manuel Martinez, General Manager, and Mr. Cornelis W. Van Zelm, Process Superintendent. Mr. Van Zelm escorted us through the units.

Urea Unit

This unit utilizes the Toyo Koatsu process and was built by C and I/Girdler. The unit was designed to produce 270 mt/day of prilled urea. The product is stored in combination burlap polyethylene bags which are heat sealed. The plant evidently experiences no problems in selling all of the production as straight nitrogen fertilizer. The unit was constructed in 1962 and appears to be well maintained.

The largest factor controlling the production cost is the cost of ammonia transferred from AMOCAR. One ton of urea requires approximately 0.6 ton of ammonia as a raw material. Therefore, for each $10/ton reduction in ammonia cost, there is a corresponding $6/ton reduction in the manufacturing cost of urea. There is some indication that efforts are being made to reduce the ammonia transfer price.

Mixed Fertilizer Unit

The unit utilizes a modified PEC process with three acidulation tanks, 12 neutralizers, and one mixing tank. It was also constructed by C and I/Girdler in 1962. There are two granulating lines each equipped with Spherodizers for granulation and drying, product and recycle screens, and hammer mill crushers.

A concerted effort is being made to reduce outleakage of dust and improve the onstream factor. The dust level was low at the time of our visit and as a result, the plant was unusually clean for a plant of this type.

Solid raw materials are received at a nearby dock from oceangoing vessels. These materials are transported to the plant by a reversible belt conveyor.

Nitric acid and ammonia are received by pipeline from AMOCAR. A variety of grades is produced, including the following:

14-14-14	15-15-15
10-20-20	8-24-14
14-18-14-3Mg	12-24-12
14-14-14-2Mg	12-12-17-2Mg, boron, Zn
10-30-10	12-6-22-2Mg, boron, Zn

The rated capacity of the plant is 400 mt/day of the 1:1:1 ratio grades. Of course, the rate may be more or less than this, depending on the grade produced.

All products are conditioned with 2% by weight of kaolin-base clay. There are three bagging lines with a capacity of 30 mt/hr each. All the production is stored in polyethylene-lined burlap bags which are heat sealed. Bagged storage capacity is 17,000 tons.

MONOMEROS Plant at Barranquilla

We visited the plant on Tuesday, March 10, 1970, and talked with Mr. Bernardo Lee, resident engineer. Mr. Lee is a civil construction engineer and was not familiar with the details of the process. However, we surmised from the flowsheet that the process is a modified Dutch State Mines (DSM) ammonium sulfate recycle process in which gypsum is recovered for use in an adjacent cement manufacturing plant. The fertilizer plant is being built to utilize byproduct ammonium sulfate from a caprolactam plant also under construction on the same site. All the equipment has been contracted for and installation is expected to be complete by the end of 1970.

Other raw materials include imported phosphate rock, phosphoric acid, potash (KCl), and ammonia. Nitric acid will be produced on site in a Stamicarbon unit.

MONOMEROS is jointly owned by the governments of Colombia and Venezuela. Caprolactam will be exchanged to Venezuela for ammonia. The design production tonnages for the fertilizer unit are as follows.

Grade	Mt/day
25-15-0	430
20-20-0	630
14-14-14	900

Although lower $N:P_2O_5$ ratio grades can be produced, the cost will be considerably higher because of increased requirements for phosphoric acid which must be imported.

Table A-1. FERTICOL Urea Solution and Prill Manufacturing Cost
(80% Urea Solution Calculated on 100% Basis)

	Case 1		Case 2		Case 3	
	80% solution	Prills	80% solution	Prills	80% solution	Prills
Production, mt/yr	12,800		17,100		18,500	
Onstream factor	0.70 (50 mt/day)		0.82 (57 mt/day)		0.82 (62 mt/day)	
Cost	US$/mt					
Ammonia (0.60 t/t)	27.60	–	27.60	–	27.60	–
80% solution (100% basis)	–	52.67	–	47.27	–	46.27
Lubricants	0.08	–	0.08	–	0.08	–
Demineralized water	0.36	0.12	0.36	0.12	0.36	0.12
Cooling water	0.63	0.04	0.63	0.04	0.63	0.04
Electricity	1.70	0.18	1.70	0.18	1.70	0.18
Bags and bagging labor	–	7.65	–	7.65	–	7.65
Subtotal variable	30.37	60.66	30.37	55 26	30.37	54.26
Maintenance personnel	1.64	1.09	1.23	0.82	1.19	0.76
Maintenance materials	2.34	1.56	1.75	1.17	1.70	1.08
Process personnel	2.77	1.84	2.07	1.38	1.91	1.28
Miscellaneous	0.53	0.36	0.40	0.27	0.37	0 25
Administrative and indirect production costs.	7.50	5.00	5.62	3.74	5.18	3.46
Depreciation	6.71	4.47	5.07	3.34	4.86	3.09
Interest and insurance[a]	–	–	0.03	–	0.11	–
Subtotal fixed	21.49	14.32	16.17	10.72	15.32	9.92
Total	51.86	74.98	46.54	65.98	45.69	64.18

[a]Interest and insurance costs are shown for new investment only. (Interest and insurance on the plant as is are included as overhead and profit in the selling price.)

Basis: Case 1 – Operate as is at 50 mt/day with onstream factor of 0.70.

Case 2 – Move Montecatini C-2 vessel to the low-pressure system and use as a condenser for low-pressure gases. Additional capital investment – $8,000.

Case 3 – Same as Case 2 except install new, high-pressure decomposer-separator and a new high-pressure absorber-cooler in the Montecatini high-pressure system. Buy vessels identical to Girdler vessels now in operation Additional capital investment – $8,000 in Case 2 plus $32,000 for a total of $40,000.

Table A-2. FERTICOL Ammonia Manufacturing Cost

	Present		After modifications[a]	
Production, mt/yr		17,800		21,700
Onstream factor		0.75 at 65 mt/day		0.85 at 70 mt/day
Cost		US$/mt		US$/mt
Process gas[b]		5.12	22 mm Btu/mt	4.83[c]
Fuel gas[b]		5.70	20 mm Btu/mt	4.40[c]
Chemicals		0.41		0.41
Catalyst		0.75		0.75
Lubricants		0.88		0.88
Demineralized water		0.53		0.53
Cooling water		2.20		2.20
Electricity		1.05		2.35
Subtotal – variables		16.64		16.35
Maintenance personnel	$ 45,000	2.53	$ 45,000	2.07
Maintenance material	75,000	4.21	75,000	3.45
Process personnel	42,000	2.36	46,000	2.11
Miscellaneous	9,300	0.52	9,300	0.43
Administrative and indirect production costs	188,000	10.60	188,000	8.70
Depreciation	257,000[d]	14.43	270,000	12.45[e]
Interest (10%) and insurance[f]		–	6,890	0.38
Subtotal fixed		34.65		29.59
Total manufacturing cost		51.84		45.94

[a]After modifications - change to electrical drives on the compressors and add ammonia recovery of flash and purge gases New investment - $130,000.

[b]Gas cost used was 3.50 pesos/mscf which will go into effect in the last half of 1970

[c]Used 42 mm Btu/mt of ammonia as a basis. This is conservative. The reduction in fuel gas is primarily a result of conversion of the compressors to electrical drives.

[d]No investment included for the old Montecatini ammonia unit with the exception of the Clark compressor.

[e]Depreciation: straight-line 10 years. Interest rate - 10%.

[f]Interest and insurance are shown for new investment only. (Interest and insurance on plant as is are included as overhead and profit in the selling price.)

Table A-3. FERTICOL Granulation Costs After Phases I and II Modifications

	Granular ammonium nitrate, 26% nitrogen	5-20-12 grade: Raw materials received by barge	5-20-12 grade: Raw materials received by rail
Production, mt/stream day	2.40	300	300
Onstream factor	0.85	0.85	0.85
Costs	US$/mt	US$/mt	US$/mt
AN solution	31.50	5.23	5.23
Ammonia	–	0.50	0.50
TSP[a]	–	25.05	27.37
KCl[a]	–	9.31	10.34
Total raw materials	31.50	40.09	43.44
Manufacturing costs			
Natural gas	0.04	0.04	0.04
Cooling water	–	–	–
Electricity	0.07	0.07	0.07
Lubricants	0.08	0.08	0.08
Bags	6.15	6.15	6.15
Bagging labor	1.50	1.50	1.50
Process personnel	1.00	0.87	0.87
Maintenance personnel	0.44	0.35	0.35
Maintenance materials	0.33	0.26	0.26
Administrative and indirect production costs	2.39	1.97	1.97
Depreciation[b]	1.57	1.17	1.17
Interest and insurance[b]	0.17	0.09	0.09
Subtotal manufacturing cost	13.74	12.55	12.55
Total cost	45.24	52.64	55.99

[a]Triple superphosphate and muriate of potash costs delivered to the plant by barge and by rail were estimated from information supplied by the Caja Agraria and Dr. Wade Gregory, Team Leader, USDA/PASA.

[b]Depreciation, interest, and insurance costs calculated for new investment only. Depreciation calculated on a 10-year straight-line schedule. (Interest and insurance on plant as is are included in selling price as overhead and profit.)

Note. Costs for other grades were calculated using the data from this table. The costs are summarized in Section II of the report.

Table A-4. FERTICOL Nitric Acid Manufacturing Cost[a]

	100% HNO_3	53% HNO_3
Production, mt/yr	16,000	30,100
Cost	US$/mt	US$/mt
Ammonia (0.285 t/t for 100%)	13.09	6.94
Catalyst	0.66	0.35
Lubricants	0.15	0.08
Demineralized water	0.36	0.19
Cooling water	1.40	0.74
Electricity	2.83	1.50
Subtotal variable	18.49	9.80
Maintenance personnel $15,000	0.94	0.50
Maintenance materials $15,000	0.94	0.50
Process personnel $22,000	1.37	0.73
Miscellaneous $8,300	0 52	0.28
Administrative and indirect production costs $61,000	3.80	2.02
Depreciation $61,700	3.85	2.05
Subtotal fixed	11.42	6.08
Total	29.91	15.88

[a]Costs of interest and insurance are included as overhead and profit in selling price of products.

Basis:

1. Assume ammonia production of 21,700 mt/yr–cost $45.94.
2. Assume urea production of 18,500 mt/yr.
3. Ammonia for urea – 18,500 x 0.60 = 11,100 mt/yr.
4. Ammonia for ammoniating triple superphosphate–1,500 mt/yr.
5. Ammonia left for nitric acid and ammonium nitrate, 21,700 – (11,100 + 1,500) = 9,100 mt/yr.
6. (a) Let X = mt/yr of ammonium nitrate production.
   (b) Let Y = mt/yr of nitric acid production (100%)
   Yield factors – 0.240 t(NH_3)/t(AN), 0.285 t(NH_3)/t-(HNO_3), 0.843 $\frac{t(HNO_3)}{t(AN)}$

NH_3 Balance

$$0\ 240X + 0.285Y = 9100 \quad (A)$$

Nitric Acid Balance

$$0.843X = Y \quad (B)$$

Substituting (B) into (A) – $0.240X + (0.285)(0.843)(X) = 9100$

$X = 18{,}950$ mt/yr of AN

$Y = 18{,}950 \times 0.843 = 16{,}000$ mt/yr HNO_3 (100%)

Table A-5. FERTICOL 95% Ammonium Nitrate Solution Manufacturing Cost (100% Ammonium Nitrate Basis)

Production, mt/yr	18,950
Cost	US$/mt
Ammonia	11.01
Nitric acid	25.20
Cooling water	0.13
Electricity	0.04
Subtotal - variables	36.38
Maintenance personnel $12,000	0.63
Maintenance materials $9,000	0.47
Process personnel $18,400	0.97
Miscellaneous $4,400	0.23
Administrative and indirect production costs $43,000	2.27
Depreciation $27,800	1.47
Interest and insurance, $2,600[a]	0.14
Subtotal fixed	6.02
Total manufacturing cost	42.44

[a]For new investment only. (Costs of interest and insurance for plant as is are included as overhead and profit in the selling price of the product.)

Basis:

1. New capital investment–$50,000 for AN solution tank.
2. Nitric acid required–0.843 ton HNO_3 /t AN at $29.91/mt of 100% acid.
3. Ammonia required–0 240 t NH_3 /t at $45.94/mt.

Table A-6. Current Transportation Costs Used by CAJA AGRARIA in Computing Fertilizer Prices

TO \ FROM	Barrancabermeja	Cartagena	Bogota[a]
Barranquilla	205.00	55.00	N.A.
Bogota	117.60	237.40	0
Bucaramanga	46.00	156.80	140.00
Cali	167.60	334.40	120.00
Cartagena	232.00	–	N.A.
Manizales	197.00	314.80	60.00
Ibague	125.00	244.80	100.00
Medellin	100.00	219.80	140.00
Neiva	157.00	274.80	120.00
Pasto	348.00	514.80	180.00
Tunja	169.00	272.80	40.00
Villavo	179.00	298.80	60.00

[a]Estimation based upon varying sales prices of 5-20-12. These approximate costs are not reliable and should not be used in computing least-cost distribution systems.

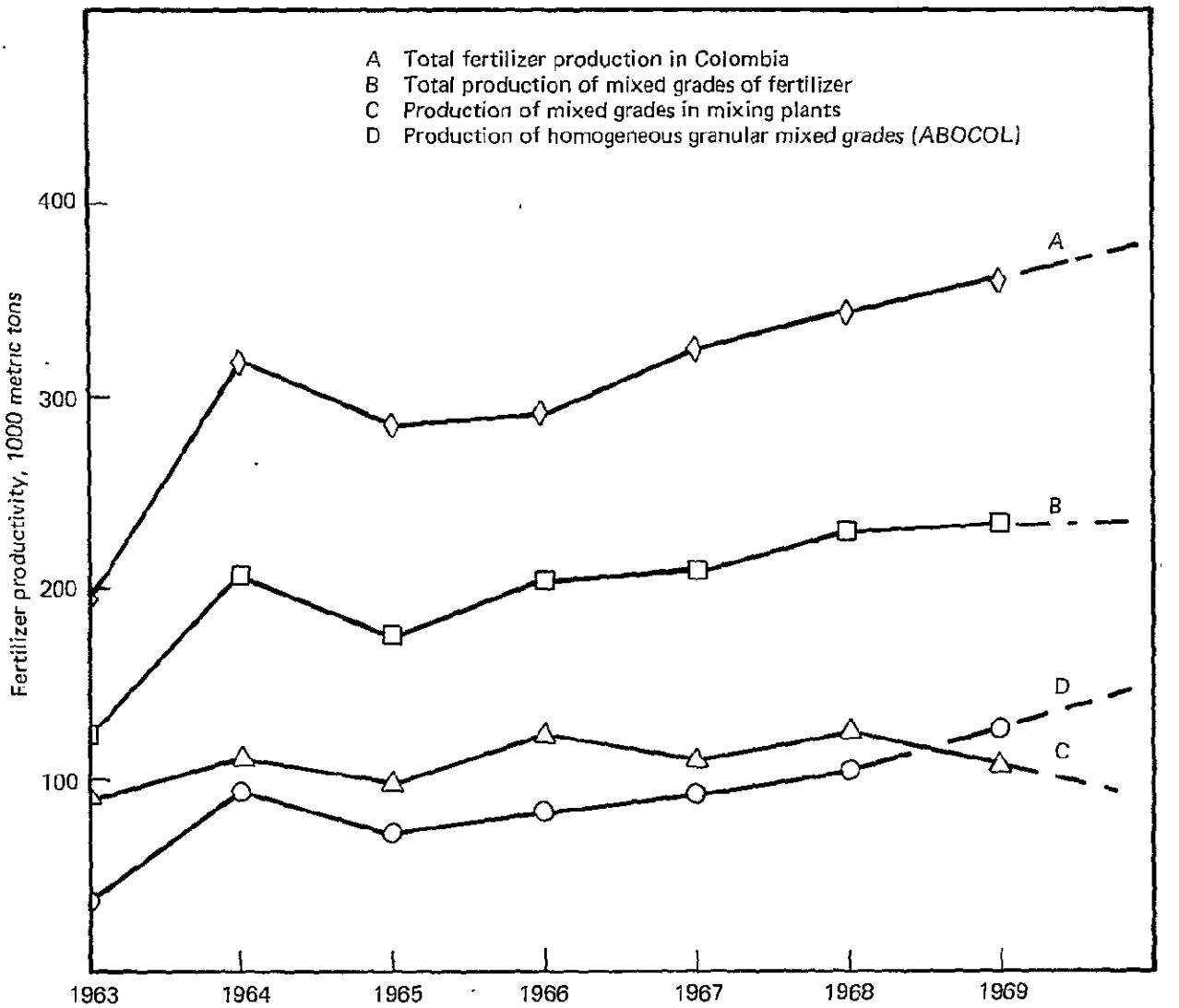

Figure A-1. Amounts and Types of Fertilizers Produced in Colombia, 1963-69

Table A-7. Fertilizer Production by Grades in Colombia—(1963-1969)

Grade	1963	1964	1965	1966	1967	1968	1969
	Mixed Grades for Indicated Year (mt)						
5-12-9	6,288	9,725	4,177	3,396	2,301	1,433	540
5-15-10	—	—	—	—	1,186	2,742	36,149
5-20-12	23,287	39,600	38,660	53,474	66,314	66,800	556
6-24-6-2	—	—	5,743	—	—	2,383	72
6-24-12	—	—	—	—	—	2,834	1,652
8-24-14	258	13,404	11,145	5,800	447	1,775	45,264
10-30-10	5,796	9,770	24,271	21,078	35,410	34,355	39,434
10-20-20	—	16,100	19.015	13,751	19,328	31,973	8,645
12-12-17-2	—	330	9,532	8,436	10,032	7,999	257
14-14-14	24,931	37,324	13,483	15,939	25,801	18,810	17,111
14-14-14-2	—	—	—	1,625	1,329	6,368	5,451
14-18-14-3	—	—	—	—	—	1,329	81
15-15-15	—	16,071	666	4,276	14,133	17,154	6,457
20-20-0	5,739	6,574	2,113	2,808	5,121	1,579	4,274
Various	58,408	58,078	44,821	73,230	26,970	30,553	65,709
Subtotal	124,702	206,976	173,626	203,813	208,372	228,087	231,652
Material			Straight Nitrogen Fertilizer				
Urea	10,718	36,936	46,812	36,974	52,822	49,708	61,585
Ammonium nitrate 26%	8,587	8,177	7,388	—	—	8,979	24,780
Ammonium nitrate 30%	—	412	1,337	—	—	—	1,751
Other nitrogens	—	—	—	—	42	61	—
Basic slag	38,376	46,980	38,937	31,258	49,124	39,798	38,000
Superphosphate 46%	5,255	—	—	—	—	—	—
Superphosphate 32%	931	14	—	—	—	49	—
Superphosphate 20%	—	4,925	4,237	4,426	2,353	471	—
Superphosphate 14%	—	2,757	—	—	126	3,705	—
Other phosphates	—	1,522	3,265	567	1,133	654	—
Phosphoric acid	—	236	189	225	260	154	—
Subtotal	64,137	101,959	102,165	73,450	105,864	103,679	—
Total inorganic	188,839	308,935	275,791	277,268	314,236	331,766	
Total organic	6,217	9,574	9,070	13,110	11,212	10,131	
Total	195,058	318,509	284,861	290,373	325,448	341,897	

Table A-8. Prices by CAJA AGRARIA for Various Fertilizers, Bagged f.o.b. Production Point, June 1969

Material	Col.$/mt	US$ Equivalent[a] mt	st	US$/lb plant nutrient
Urea[b]	$1,586	$92.21	$83.83	$.090
26% AN[c]	1,324.4	77.00	70.00	.135
Mixed Fertilizers				
10-20-20[c]	1,435	83.43	75.85	.076
15-15-15[b]	1,427	82.97	75.43	.083
10-30-10[b, c]	1,515	88.08	80.07	.080
5-20-12[d]	1,480	86.05	78.23	.106

[a]Based upon Col.$17 2/US$1.
[b]F.o.b. Cartagena.
[c]F.o.b. Barrancabermeja.
[d]F.o.b Bogota.
Source: Basic data on wholesale prices furnished from official records of Caja Agraria, June 1, 1969.

Table A-9. Prices in Colombian Pesos of CAJA AGRARIA Fertilizers at Different Locations in Colombia, June 1969[a,b]
(Source of U. S. Prices: Agricultural Prices, April 1967 & 1969)

Region	Urea	15-15-15	5-20-12	10-20-20
Barranquilla	1,838	1,660	not sold	1,669
Bogota	2,042	1,730	1,480	1,739
Bucaramanga	1,952	1,650	1,620	1,659
Cali	2,151	1,787	1,600	1,795
Cartagena	1,776	1,598	not sold	1,607
Manizales	2,129	1,823	1,540	1,828
Ibague	2,050	1,738	1,580	1,747
Medellin	2,022	1,710	1,620	1,719
Neiva	2,084	1,774	1,580	1,783
Pasto	2,353	1,932	1,660	1,997
Tunja	2,082	1,788	1,520	1,796
Villavo	2,021	1,799	1,540	1,808
Avg. for 12 locations	2,042	1,749	1,574	1,762
Range U. S. Prices April 1969				
High	1,987	1,726[d]	1,200[e]	N.A.
Low	1,343	1,429[d]	1,000[e]	N.A.
U. S. Average	1,587	1,516[d]	1,120[e]	1,764
Range U. S. Prices April 1967				
High	2,081	1,797[d]	1,350[e]	N.A.
Low	1,627	1,561[d]	1,250[e]	N.A.
U. S. Average	1,879	1,670[d]	1,277[e]	1,819[f]
1957-59 Average	2,125	1,682[d]	1,327[e]	1,778[f]

[a]Computed from base purchase price plus freight plus 12% gross markup to cover distribution costs and interest charges
[b]Based upon exchange rate 17.2/US$1.
[c]No figure available for 57-59 average for urea This figure computed based upon equivalent N in ammonium nitrate at 81.80/S.T.
[d]Based upon 12-12-12 equivalent of 15-15-15.
[e]Based upon 6-24-12 equivalent to 5-20-12.
[f]Based upon 8-16-16 equivalent to 10-20-20.

SMALL FERTILIZER MIXING PLANTS VISITED IN COLOMBIA

ABONOS FORTUNA

ABONOS FORTUNA is a small plant in Bogota that produces from 400 to 1200 tons/yr of mixed fertilizer. Plant equipment includes platform scales, portable screens, and a vertical screw-type mixer of about 1-ton capacity. The plant was not operating and no information was obtained on raw materials, grades produced, or prices. Raw materials observed were ROP 20% superphosphate, fine potash, and phosphate rock (20% P_2O_5). Observed grades stamped on bags were 5-10-15 and 5-15-15. The vertical mixer was manufactured in Bogota and had a capacity of about 1 ton/batch. Raw materials were fed by hand in a small hopper at the bottom of the screw and were conveyed upward to be discharged into a larger hopper. The material from the larger hopper could be recirculated through the screw for mixing. The mixer probably could do a good mixing job if the raw materials were introduced to the mixer at approximately the same proportions desired in the final mix.

DEPOSITO DEL AGRICULTURA, LTDA., FABRICA DE ABONOS SUPERPHOS

This plant, located in Bogota, has an annual capacity of 6,000-8,000 tons/yr. The plant had a 1-ton rotary mixer which looked to be in relatively good condition but laborers were using shovels to hand mix 1-ton batches on the concrete floor. Angel M. Acosta, Plant Manager, said it was less trouble to mix on the floor than to use the mixer. Raw materials were bagged fine potash, 18-46-0, 46% TSP, and urea. Bulk sand was used as filler. Raw materials appeared dry and in good condition except for small lumps. Raw materials were weighed on platform scales and screened on portable scalping screens. The mixed products were bagged by hand in plastic-lined burlap bags and sewn with a portable machine; the plastic liners were not heat sealed. No selling prices or cost data were obtained. Raw materials were purchased in Bogota and the product was retailed in 1- to 100-ton lots.

Raw materials were of mixed sizes and chemically incompatible. Sand used for filler did not appear to be dry.

ABONOS EXCELSION

This small plant, located in Bogota, used a vertical 1-ton screw mixer similar to the one used at Abonos Fortuna. Raw materials were weighed on platform scales, charged to mixer, *or* hand mixed with shovels on the floor and bagged by hand in plastic-lined burlap bags. The manager was reluctant to give information or show us the plant. He said each batch was mixed for 30 minutes in the mixer. Total production was only a few hundred tons/yr. Grades produced were *5-15-15, 5-10-15,* and *6-12-12.*

Raw materials used were bagged urea, DAP, 46% TSP, fine KCl, and bulk sand used as a filler. A small dryer was used for drying the sand.

Raw materials were chemically incompatible and quality of products was questionable.

Formulations

Grade 5-15-15	(kg)
DAP (18-46-0)	280
TSP (0-46-0)	50
KCl (0-0-60)	250
Sand	420
	1,000

Calculated grade: 5.1-15-15

Grade 5-12-18	
DAP (18-46-0)	263
TSP (0-0-60)	300
Urea (45-0-0)	12
Sand	425
	1,000

Calculated grade: 5.27-12-18

Formulation

Grade 5-15-15	(kg)
DAP (18-46-0)	284
TSP (0-46-0)	50
KCl (0-0-60)	252
Sand	414
	1,000

Calculated grade: 5.1-14.9-15
Selling price, $1,400/ton
Raw materials cost, $1,172/ton

HERNANDEZ CARLOS

This plant in Bogota had a crude vertical blending tower that had not operated in about six months. Plant area was used as warehouse for fertilizer, seed, pesticides, and other farm supplies.

HUERTA

This plant used a 2-ton, horizontal cylinder, mixer with a single shaft driven at 63 revolutions/minute with a 20-horsepower motor. The shaft contained 18 slender mixing blades or paddles which were alternately advancing and reversing except near the discharge port. Raw materials were weighed on platform scales and charged at top midsection of the mixer. The mixer was out of order and

materials were mixed on the floor with shovels. The materials mixed on the floor appeared damp. The manager said he could produce 100 tons/month of mixed fertilizer. He buys raw materials in Bogota (evidently from SOLER PEDRO and CAJA AGRARIA) at the following prices.

Selling price of the 14-14-14 product was $1,800/ton and cost of raw materials was $1,605/ton. The raw materials used were chemically incompatible and the material being mixed on the floor appeared damp and poorly mixed. The products were hand bagged in plastic-lined burlap bags. The plastic liners were not heat sealed.

Raw materials	Cost, $ Col./ton
Granular 18-46-0 in bags	2,450
Fine potash in bags	1,500
46% triple superphosphate in bags	1,450
26% ammonium nitrate (FERTICOL)	1,350
Prilled urea (cost estimated)	1,775
Bulk sand	50

Grades and formulations

6-16-13		(kg)	Grade calculated from formulation
Diammonium phosphate	-	360	6.5-16.5-13.5
Potassium chloride	-	220	
Sand	-	420	
		1,000	

5-14-18			Grade calculated from formulation
Diammonium phosphate	-	310	5.6-14.3-18.3
Potassium chloride	-	305	
Sand	-	385	
		1,000	

5-20-15			Grade calculated from formulation
Diammonium phosphate	-	306	5.8-20.6-15.8
46% triple superphosphate	-	142	
Potassium chloride	-	260	
Sand	-	292	
		1,000	

14-14-14			Grade calculated from formulation
Diammonium phosphate	-	315	14.6-14.6-14.4
Ammonium nitrate	-	346	
Potassium chloride	-	240	
Filler (oyster shell)	-	99	
		1,000	

Abono Quimico AGRIFOS

This mixing plant, located in Bogota and managed by G. I. Jaime, was the newest and most modern of all we visited. It was housed in a modern building and used a rotary batch mixer. The new mixer was approximately 5 ft in diameter by 12 ft long and was equipped with lifting flights and adjustable unloading chute. A batch bucket hoist was used for charging the mixer; a hopper at the top of the mixer was equipped with a slide gate which allows a new batch to be weighed and placed in the hopper while another batch is mixed. The mixer was built in Colombia and workmanship appeared excellent.

Raw materials from bags of known weight were dumped into the bucket of the charging hoist; odd amounts and sand were weighed on platform scales before dumping into the bucket. Mr. Jaime said the unit could mix a 1.5-ton batch every 15 minutes. He did not have data on formulations or prices of the raw materials and finished products.

Raw materials used	
Bagged	Bulk
Granular DAP	Sand for filler
Run-of-pile 46% TSP	
Fine KCl	
Granular AN (26% N)	

Grades produced

5-20-15; 5-20-12; 6-15-15; 10-30-10

This plant was very clean and evidently had not operated in some time. The bagged product appeared to be fairly well mixed and had only light caking; the lumps were soft and appeared to be the result of moisture in raw materials, particularly potash. The plastic-lined burlap bags were closed with a portable sewing machine, and the plastic was not heat sealed. This plant is capable of producing high-quality bulk blends if proper raw materials and operating procedures are used.

REPORT OF ADVANCE TVA FERTILIZER TEAM TO COLOMBIA

The purpose of this trip was to consult with an USDA/AID team on an overall study for a 5-year fertilizer plan for Colombia. The work was accomplished in conjunction with Dr. Wade Gregory, team leader of the USDA/AID PASA team, and resulted from Dr. Gregory's specific request for such assistance.

A list of personnel and organizations contacted during the visit is attached.

In addition to lengthy consultation on the overall study which is required before a 5-year fertilizer plan can be completed by the Colombia Ministry of Agriculture, assistance was given in several specific areas of the study.

Supply Situation Summary (for fuller discussion, see Annex)

There are two nitrogen production units in Colombia. One is run by Esso International; the other is a governmental plant. With recent changes, these two plants should be able to supply at least double the amount of nitrogen which Colombia now uses. This amount, in any normal situation, will be more than sufficient for Colombian agriculture through the period 1975—in terms of both total nitrogen and straight nitrogen materials.

Although phosphate rock, phosphoric acid, and some triple superphosphate are being imported, there would appear to be insufficient demand to require additional major phosphate fertilizer production facilities through 1975. Current and projected imports amount to approximately 20,000 tons P_2O_5 per annum, including H_3PO_4 and triple superphosphate—too small an amount to justify construction of a wet-process phosphoric acid plant. The one situation wherein such construction might be economically justified would be a possible joint undertaking between Colombia and one of the neighboring countries such as Venezuela.

Potash is being imported; and, since no supplies are available, must continue to be imported.

Colombia now has about 20 mixing plants ranging in size from 60,000 tons per year down to less than 100 tons per year. Production capacity for mixed fertilizers is more than ample in quantity. Quality of mixed fertilizers, however, is highly suspect—over 45% of samples tested last year failed to meet minimum quality specifications. There would appear to be need for a revamping of the entire mixed fertilizer industry in Colombia.

Current Price of Fertilizer

Generally, the prices Colombia farmers pay for fertilizers are slightly higher than those paid by U. S. farmers for equivalent fertilizers today, but are lower than the price paid for the same fertilizers by U. S. farmers 10 years ago. In other words, Colombia farmers currently pay more than U. S. farmers for equivalent fertilizers on the currently depressed market but pay less than U. S. farmers paid when the U. S. industry was in a more balanced supply-demand situation.

There are two exceptions: ammonium nitrate, which is being produced in the government plant and priced at extraordinarily high prices; and a 5-20-12 grade mixed fertilizer produced by a governmental agency and distributed primarily to potato farmers.

Very little ammonium nitrate is being sold, since urea at a lower price per unit of nitrogen is generally available. Large tonnages of the 5-20-12 are sold at prices per unit of plant nutrient appreciably above prices for other grades of mixed fertilizers. The sole producer of this material is able to sell it at the higher price—since that producer is also the official government credit agency.

Transportation Costs

A preliminary investigation showed that transportation costs range from 10-35% of the total cost of the fertilizer to farmers. Transportation costs of U. S. fertilizers normally average as high a percentage—or higher—of the total cost to farmers.

Distribution Channels

Fertilizer in Colombia is distributed through a multiple-faceted distribution channel, both public and private. Cooperatives or semi-cooperatives distribute some 20-30% of the total. Caja Agraria, the government credit agency, distributes approximately 25-30%. Other fertilizers are distributed through various other types of public and private distribution agencies.

Additional Work Needed

While investigating the supply situation in Colombia—specifically, the Ferticol production unit at Barrancabermeja—it was found that this plant has many engineering-economic problems. Its current product mix is not a suitable one, in view of its distribution channels. Its production costs are high, particularly because of low rates of production. Informal request was made that TVA consider sending a combined team of economists and engineers to study alternative courses of action which this plant might follow. A formal request will be made at a later date.

The consultation provided on this particular trip was actually sufficient to only get work started on the 5-year fertilizer plan. Personnel who will be doing a major portion of the work are the USDA/AID PASA team in conjunction with the Economic Planning Section of the Ministry of Agriculture. The final report will be a Ministry of Agriculture report, not one under TVA authorship. Since no report was requested from TVA on this particular consultation, this trip report is being filed for administrative purposes.

(Annex to Trip Report)

THE FERTILIZER SUPPLY SITUATION — COLOMBIA 1969

Present and Proposed Plants

1. Abocol-Amocar plant at Cartegena

This Esso plant is one of the typical overseas plants built by Esso International. It is comprised of an ammonia-urea modified PEC-process mixed fertilizer facility. It had, within the past two months, undergone a major expansion and was in the stage of coming back on stream with all production facilities. Its current production capacities per stream day are:

NH_3	— 390 tons
HNO_3	— 157 tons
Urea	— 270 tons
Any of several different mixed fertilizers	— 450 tons

Among the major mixed fertilizer products are: 15-15-15, 10-30-10, 10-20-20, and 12-17-12. Also, a small amount of 6-22-6 is made.

In the past, although it has been able to operate at a maximum of only 77% of capacity, it has been exporting up to 20,000 tons of ammonia per year. It is expected that additional amounts will be available for export in the future. Its nitric acid capacity is at least 50% more than needed with its current product mix. Its urea capacity, after the expansion, is far more than has ever been required by the Colombia fertilizer industry.

Sources of raw materials are as follows:

Hydrocarbons	— natural gas from Esso
Phosphoric acid	— imported
Phosphate rock	— imported
Triple superphosphate	— imported
Potash	— imported

2. Ferticol plant at Barrancabermeja

This plant essentially is a government-owned plant. Sixty percent of the ownership is vested in government corporate agencies. The remaining portion is either owned by other government agencies or private individuals. With the corporate laws as they are in Colombia, it would be quite difficult to say which. While we were there, the corporate setup in Colombia was completely reorganized and consolidated under one general manager. All plant facilities and utilities now are the responsibility of one man—not, as it has been in the past, divided between different organizations and management.

The basic plant consists of a 65-ton per day Girdler-type Amopac ammonia unit, a 135-ton per day nitric acid unit, and a 150-ton per day 26% ammonium nitrate unit. In addition, there is a 50-ton per day urea reactor and prilling tower. For granulation of the ammonium nitrate, there are two pug mills. Instead of using dolomitic limestone in the ammonium nitrate plant, they are using a local clay which they obtain in their own backyard. No other coating agent is used.

The plant has been plagued by numerous problems since its beginning. It was originally a Montecatini-designed ammonia plant, but did not produce sufficient CO_2 of such a quality as to allow production of urea. At no time were they able to obtain continuous operation of the old ammonia plant.

In 1964 or 1965 it was decided to install a complete new Girdler-type ammonia prepackaged unit. In May 1968, after a long closure, this plant attempted to come back on stream. After numerous electrical failures, the plant was closed down in September 1968 for three months for a complete electrical system renovation. It came back on stream in late December and got up to as high as 81% of rated capacity by March or April, at which time electrical failures again began plaguing management. During all this time, the electrical generation system was under the management of the nationalized oil refinery—not the fertilizer plant. In the latest reorganization, the electrical

system, including the generators, was placed under the management of the Ferticol company.

The plant obviously has major difficulties of a technical nature. To a distribution economist, the problems of product mix are even more obvious. The price being charged for the ammonium nitrate is so high as to prevent its sale. As a result, only 226 tons were sold to farmers during calendar year 1968. The remainder was used in mixtures or accumulated in various inventories either at the plant or in the field.

Even if the price of material is lowered, the sole sales agent, Caja Agraria, cannot expect to distribute the total output of the plant as straight nitrogen materials. Their total requirements for straight nitrogen materials are less than 25% of the rated capacity of the plant.

Informal request was made for assistance from a combined engineering-economic team to (1) investigate alternative product mixes which might be made *and sold* by the Ferticol plant, and (2) give technical assistance and guidance in how best to keep the plant running and redesign the plant equipment so as to enable them to produce a high-quality mixed fertilizer.

3. Monomerous

A proposed caprolactam facility is well underway at Baranquilla. This organization has already contracted for 80% of the total equipment needed. The site preparation and harbor facilities are already complete. Contracts for purchase of the remainder of the equipment are in process of being let.

The plant will have a capacity of 16,000 tons of caprolactam per year. For each ton of caprolactam there will be a byproduct of 4.3 tons of ammonium sulfate. The ammonium sulfate has no ready market in Colombia; therefore, it will be used in a Dutch State Mines sulfate-recycle-type system to produce various grades of mixed fertilizers. The three grades proposed are 20-20-0, 25-15-0, and 14-14-14. It is proposed in the future to trade caprolactam to Venezuela for the ammonia required for the operation of the plant. Therefore, there will be no requirement for foreign exchange nor for an ammonia plant. Phosphate rock and the minimal amounts of phosphoric acid required will be imported from Florida or Mexico, as the case may be. Potash will be imported, probably from Spain.

Production capacity of the plant will vary, according to which grade is made, from 440-tons per day to 900-tons per day. It is contracted to come on stream no later than October 1970.

4. Mixing plants

Colombia has about 20 mixed fertilizer plants, ranging in size from 60,000 tons per year down to less than 100 tons. Visits were made to three of the largest.

Sulfacidos plant at Barrancabermeja—This plant is a privately-owned operation which mixes fertilizer for various distributors. It mixes materials for government agencies, co-ops, and private dealers. Although it has capacity to produce normal superphosphate, it does not do so under the current scheme of operations. It is said to be owned by International Minerals and Chemicals Corporation. Its general manager is Camilo Karim, a former one-year student at TVA.

Plant equipment consists of various mixers for bulk blending of raw materials, two opposing deep pan granulators, a gas-fired dryer, a cooler, sizing screens, and bagging equipment.

The plant imports triple superphosphate, potash, and some amounts of diammonium phosphate, usually from the United States. These materials are shipped to an Atlantic port and then barged or shipped by rail to the plant location. It uses some small amounts of the Ferticol ammonium nitrate, together with other sources of nitrogen (imported).

Various grades of mixed fertilizers are produced, most of which have a low N:P ratio—in no case exceeding 1:1. It produces up to 60,000 tons per year. The materials are bagged under various trade labels. While we visited the plant it was producing a 10-30-10 grade mixed fertilizer. The quality of material appeared to be excellent, with very small to insignificant amounts of recycle material.

Caja Agraria mixing plant at Bogota—This plant mixes some 60,000 tons/year of fertilizer. It is the sole producer of 5-20-12 grade fertilizer for use on the major potato crop.

Its equipment consists of a set of floor scales for weighing wheelbarrow loads of ingredients, a hopper, and conveyor leading to a concrete mixer. From there, the material is conveyed to a hopper and bagged by machine (without benefit of screens). The fertilizer is bagged in 50-kilo bags and stacked to a height of 32 bags.

For the 5-20-12 grade fertilizer, the plant uses 0.20 tons of potassium chloride, 0.435 tons of 46% triple superphosphate, 0.193 tons of 26% ammonium nitrate, and 0.172 tons of various and assorted sands. No dryer facilities are available, and there are no sizing screens.

The resulting end product cakes rapidly and hard. The few tests which have been run of its quality are clearly indicative of its lack of quality control. Yet it is one of the major mixing facilities within the country and is run by a corporate agency of the Ministry of Agriculture.

Caja Agraria mixing plant at Cali—This mixing plant is a newly installed vertical-type bulk blender. The plant was not operating during our visit. It would appear, however, that much better facilities are available here at Cali than were observed at Bogota. The plant facility was clean and neat, and appeared to be well managed.

Records show, however, that the plant normally mixes only 3,000-4,000 tons of specialty grade fertilizer annually.

The material is mixed to order for the specialty crops of the Cauca Valley. For normal grades of fertilizer used in this area, Caja Agraria purchases material already mixed and bagged from the Abocol plant—or, in some cases, from the Sulfacidos plant.

Normal superphosphate plants—Colombia has three or four very small normal superphosphate plants. These plants use small amounts of imported, or in some cases locally produced, phosphate rock in conjunction with spent sulfuric acid to produce a low-grade normal superphosphate. The quantities of spent sulfuric acid are very small, and therefore the normal output of these plants combined amounts to less than 2,000 tons P_2O_5 equivalent per year. For practical planning purposes, they can be discounted for the next 5-year fertilizer plan.

Colminas, a semi-private rock mining venture, has contracted for construction of a normal superphosphate plant near Turmeque. This plant will have a capacity of 75,000 tons of normal superphosphate per annum. The contracted construction completion date is November 1969. The plant will use locally produced phosphate rock and locally mined sulfur from volcanic sources. The phosphate rock mines are open and working; however, they have yet to get the sulfur mines started. It is apparent that in the initial phases sulfur for operation of this plant almost certainly will be imported, although the chairman of the board of directors indicated that no provisions have as yet been made for this.

LIST OF PERSONNEL AND ORGANIZATIONS CONTACTED

Colombia Ministry of Agriculture

Dr. Thomas Lopez, Head of Economic Planning Section

USAID Personnel

Edward Anderson, Dep. and Acting Director, AID Mission, Bogota
Kenneth McDermott, Agricultural Officer, AID Mission

USDA/AID PASA Team

Dr. Wade Gregory, Team Leader
Dr. Larry Boone, Production Economist
Dr. Eldon Brookes, Transportation Economist
Dr. Robin Hennings, Marketing Specialist

USDA-ERS

Dr. Lewis Upchurch, Administrator, ERS

The Rockefeller Foundation

Dr. Robert K. Waugh, Director
Dr. Jim Spain

FERTILIZER PLANTS

P.Q.E., Amocar, Abocol *(Esso organization in Bogota)*

Leon Hequin, Director of Marketing, P.Q.E.
Jaime Botero, Market Research Manager, P.Q.E.
Alberto Gaitan, J., Production Manager, Abocol
Alfredo Del Solar, Asst. Director of Marketing

Colminas *(phosphate rock mining and grinding company)*

Don Bernardo Mejia, S.

Ferticol *(Government fertilizer plant)*

Orlando Pastrano, General Manager
Julio Jiminez, Production Manager

Sulfacidos *(mixing plant)*

Camilo Karim, Production Manager

Monomeros *(proposed caprolactam and fertilizer plant)*

Alfonso Londano, D., Administrative Director
Hernan Castro, M., Assistant Engineer

Esso International *(Coral Gables, Florida, office)*

James Rinehart, Marketing Manager
John Steedman, Marketing Analyst
Jack V. Sams, Production Manager

VISITING AID TEAMS

University of Nebraska Team

Dr. Clayton Yvetter, Team Leader
Dr. Kenneth Frank, Economist

Michigan State Team *(for intensive study of Cauca Valley)*

Dr. Kelly Harrison, Team Leader
Dr. Nelson Suarez, Team Co-leader
Dr. Harold Riley
Dr. James Shaeffer

Harvard Team *(assisting Economic Advisor to President)*

Dr. Irving Baskins
Dr. Clive Gray

University of Chicago *(Consultant to Harvard team)*

Dr. Al Harburger, Head of Dept. of Economics, Univ. of Chicago

GOVERNMENT AGENCIES

Caja Agraria *(Government credit agency and fertilizer distributor)*

Dr. Eugenio de Gamboa, Director of Distribution
Pedro Acosta, Chief of Fertilizer Distribution Section

Incora *(Government agency similar to Farm Security Administration)*

Mr. Ladino
Mr. Herrero

I.C.A. *(Government experiment station and extension service)*

Dr. Herman Chaverra, Director of Research
Dr. Hugo Manzano, Head, Soils Section
Dr. Guillermo Riverao, Head, Plant Physiology Section

Palmira Experiment Station *(near Cali)*

Dr. Gildardo Marin, Director

PROJECT

PROGRESS ADVICE DATES INITIALS

CATALOGUE return to 1650

ABSTRACT

FICHE RANDD

COMMENTS:

HW

August 197

Bulletin Y-10

NATIONAL FERTILIZER DEVELOPMENT CENTER TENNESSEE VALLEY AUTHORITY MUSCLE SHOALS, ALABAMA 3566