AGENCY FOR INTERNATIONAL DEVELOPMENT
WASHINGTON, D. C 20523

BIBLIOGRAPHIC INPUT SHEET

FOR AID USE ONLY
Batch 85

1. SUBJECT CLASSIFICATION

A. PRIMARY: Population — PC00-0000-0000

B. SECONDARY: Family planning

2. TITLE AND SUBTITLE

A study of reported condom deterioration; supplement

3. AUTHOR(S)

Belsky, R.L.

4. DOCUMENT DATE: 1978

5. NUMBER OF PAGES: ~~45p.~~ 46p.

6. ARC NUMBER: ARC

7. REFERENCE ORGANIZATION NAME AND ADDRESS

APHA

8. SUPPLEMENTARY NOTES *(Sponsoring Organization, Publishers, Availability)*

(Main work, 148p.: PN-AAF-540)

9. ABSTRACT

10. CONTROL NUMBER: PN-AAF-631

11. PRICE OF DOCUMENT

12. DESCRIPTORS

Birth control
Contraceptives
Deterioration
Quality control
Tests

13. PROJECT NUMBER

14. CONTRACT NUMBER: AID/pha-C-1100 GTS

15. TYPE OF DOCUMENT

AID 590-1 (4-74)

AID/pha-C-1100 GTS
APHA
PN-AAF-631

A SUPPLEMENT TO A STUDY OF REPORTED CONDOM DETERIORATION

Prepared By:

RAYMOND L. BELSKY, B.S.E.E.

During The Period:

JANUARY 15 THROUGH MARCH 4, 1978

Under The Auspices Of The:

AMERICAN PUBLIC HEALTH ASSOCIATION

Supported By The:

U. S. AGENCY FOR INTERNATIONAL DEVELOPMENT
OFFICE OF POPULATION, AID/pha/C-1100

AUTHORIZATION:
Ltr. POP/FPSD: 8/30/77
Amend.: 2/14/78
Assgn. No.: 1100-072

CONTENTS

		Page
I.	Conclusions from Testing of Three Sets of Sampled Condoms from Thailand and Bangladesh	1
II.	Considerations in Testing Condoms for Tension	2
III.	Comparison of Tests Undertaken by MacMillan Research, Springborn Laboratories (on their own samples), and Springborn on Akwell Prepared Samples	4
IV.	Observations and Recommendations for Consideration by AID	6
APPENDIX		
A.	Results of Testing Cut Ring Samples at Springborn Laboratories	7
B.	Results of Corraborative Tests at Springborn Laboratories of Dumbbell Samples Prepared by Akwell Industries	10
C.	ASTM Specifications	
	1. D-3492-77 Rubber Contraceptives (Condoms)	13
	2. D-412-75 Test Methods/Rubber Properties in Tension	17
	3. D-3577-77 Rubber Surgical Gloves	30
D.	BST Specification BS3704 - Rubber Condoms	34

A SUPPLEMENT TO A STUDY OF REPORTED CONDOM DETERIORATION

I. CONCLUSIONS FROM TESTING OF THREE SETS OF SAMPLED CONDOMS FROM THAILAND AND BANGLADESH.

Condoms from samples taken in Thailand at the CBFPS Boonma warehouse in Bangkok and taken in Dacca from the PSI warehouse were initially tested by MacMillan Research at the Akwell factory in Dothan, Alabama, using Akwell equipment and personnel. The tests were closely observed by MacMillan Research. The results indicated that both lots of condoms are satisfactory, with considerable margin in strength over minimums as measured in percent elongation at breaking and tensile strength at breaking.

Since the condoms were tested at Akwell, and although the tests were scrupulously supervised by MacMillan Research, it was felt that another set of tests should be performed to further validate the original results.

Springborn Laboratories in Enfield, Connecticut, were given 50 samples from each lot, prepared cut ring specimens (Discussion follows), and tested the samples in accordance with ASTM Specification D-3492-77. The results of these tests showed significant discrepancies from the MacMillan tests so that another test was deemed appropriate. In order to control the variables, Akwell prepared the specimens (dumbbell type) and Springborn tested these specimens.

The tests by Springborn Laboratories confirmed the original results regarding percent elongation at break and confirm that the condoms sampled from the Thai CBFPS program and the Dacca PSI program are strong and are sound products and well above the minimum criteria established by the ASTM specification.

II. CONSIDERATIONS IN TESTING CONDOMS FOR TENSION

A. Methods of Testing

ASTM specifications D-3492-77 (Condoms) call for testing for tensile strength and percent elongation using a ring cut out of the sample condom. ASTM Specification D-412-75 describing test methods for rubber properties in tension allows for either the cut ring or a dumbbell cut axially from the sample. The dumbbell shape is the most widely used in materials testing. ASTM D-412-75 states that results achieved by the two methods are generally in agreement.

B. Criteria for Tension

The ability of the condom to be stretched under great load is indicative of the soundness and strength of the product, both immediately after manufacture under accelerated aging procedures and after several years of shelf life under varied storage conditions. The measure of strength is tensile strength at break and percent elongation at break when the specimen is pulled apart by a testing machine.

ASTM D-3492-77 (condoms) lists minimum criteria for percent elongation and tensile strength as performed on a cut ring specimen. The calculation of tensile strength involves the thickness and width of the specimen which should have smooth even edges.

C. Preparation of the Specimen

Since thickness, width and evenness of the sample are critical to the results, the preparation must be performed with great care. As condoms are made of very thin films, any powder and lubricant must be thoroughly removed before the thickness of the specimen is measured. The thickness is in the denominator of the tensile strength calculation and if not measured down to bare rubber can produce low tensile strengths.

The die (either for cut ring or dumbbell) must be accurate and rigid for proper width and extremely sharp for a clean cut. A sharp force is desirable. In addition, the condom must be flat when cut so that there are no uneven edges which could accelerate failure of the material.

D. Measurements

The thickness of the specimen is measured in thousands of a millimeter and under a specified load on the micrometer caliper surfaces. A dial micrometer caliper is easiest to read accurately.

The width of the specimen is preset in the manufacture of the die and described in the specifications.

Percent elongation at break may be measured in several ways. A testing machine with digital readout is most accurate. This machine is very special and costly and generally only the condom manufacturers or a few specialized laboratories have the device. Other methods are oriented to operator reaction

time and visualization . One approach is to stop the machine immediately when the condom breaks and measure the distance between the upper and lower grips (cut ring) with a ruler. This method is dependent on operator reaction time. The second method (for the dumbbell) is to place two ink marks one inch apart on the narrow part of the specimen and observe the stretching sample until it breaks. As the rubber stretches the marks stretch and separate. This method is useful only with products well over minimum criteria or severely deficient. Elongation suitability would be difficult to measure on marginal condoms.

The load at which the specimen breaks may be read on an automatically stopped digital counter, from a chart record or observing a needle at the point of breaking. Load measurements are generally less subjective than percent elongation (except for accurate digital elongation readout machines) and consequently for marginal product are more accurate as a criteria than elongation.

E. Gripping the Specimen

Conventional testing machines have gripping devices which exert uniform pressure across the dumbbell. Since the rubber is thin, a slight amount of friction, such as emery cloth, will hold the specimen from slipping and stretching in the grips.

According to ASTM D-3492-77 (condoms) cut ring specimens are slipped over rolling grips mounted horizontally within the machine jaws, one of which is "driven." The specification does not say that the ring should be rotated as it is pulled apart. Akwell rotates one of the grips with a small electric motor since the British Standards Institute (BSI) requires it. Springborn used fixed rods rather than rolling grips which would conform to the ASTM specificiations.

III. COMPARISONS OF TESTS UNDERTAKEN BY MACMILLAN RESEARCH, SPRINGBORN LABORATORIES AND SPRINGBORN LABORATORIES ON AKWELL PREPARED SAMPLES

A. Preparation

1. Cut ring

   a. MacMillan/Akwell unrolled the condoms to the head and took ring specimens as specified by using solid sharp mallet dies mounted on a solid stable surface. The specimen was cut by striking the die.

   b. Springborn's die was mounted on a piece of wood mounted in a hand operated arbor press which required a consistent sharp motion by the operator. The die seemed duller and the condoms were not always flat, causing uneven edges.

2. For the third set of tests dumbbell specimens were cut for Springborn by Akwell using sharp mallet dies.

3. Akwell very carefully cleans (buffs) the condoms. Springborn's cleaning may not have been as thorough for the second set of tests.

4. Akwell measured thickness with a dial micrometer with the specified pressure. Springborn used hand micrometers which could produce variable readings.

B. Testing

1. MacMillan/Akwell's tests were performed on an automatic digital readout testing machine which is very accurate. The specimens were cut ring and the bottom roller grip was driven to rotate the ring.

2. For cut rings Springborn used fixed roll grips, well lubricated with silicone. The readout of load at breaking was automatically recorded on a chart which is quite accurate. Percent elongation was read by the operator stopping the machine at break and measuring the distance between the roller grips.

3. Since Springborn's roller grips did not rotate, it was decided to have Akwell cut dumbbell specimens which could be gripped for standard tensile testing machine jaws. Akwell also tested duplicate specimens from five of the condoms that Springborn tested of each fifty piece lot in Springborn's second round of testing. Results were comparable.

C. General Considerations

1. The MacMillan/Akwell cut ring specimen results were probably the most accurate since they were performed on an automatic digital readout machine for both load and percent elongation at break

on well prepared condoms.

2. The Springborn Laboratory cut ring specimen results indicated an excessive amount of failures which is probably due to insufficient cleaning of the lubrication and powder variable specimen thickness readings, some unevenly cut specimens, and, perhaps, the roller grips not rotating the specimen.

3. The ASTM condom specification does not have criteria for tensile strength of dumbbell specimens so that percent elongation was the only criteria used for final evaluation. The elongation results for the dumbbells were so significantly above those listed in the specification for cut ring that the investigator must conclude the acceptability of both lots.

4. If standard tensile testing machines are to be used in various geographic regions then criteria specifically relating to dumbbells should be developed as well as for cut ring. Rotating roller grips needed for cut rings may restrict condom testing to only the manufacturers and a few specialized laboratories like BSI.

IV. OBSERVATIONS AND RECOMMENDATIONS FOR CONSIDERATION BY AID

In the course of resolving the test results between Macmillan/Akwell and Springborn, a discrepancy was noted in the specification for testing cut ring samples. The ASTM condom specification calls for roller grips without specifying whether they are free to rotate or whether one grip is to be driven. The most obvious interpretation, as Springborn observed it, was to use fixed rods. Akwell (and other manufacturers, probably) drive one of the roller grips in accordance with the BSI specification. This discrepancy should be clarified.

The dumbbell specimen, which is by far the most widely used configuration, may not be revealing enough for condom strength, but for use in any materials testing laboratory around the world criteria for dumbbell specimens comparable to cut ring data would be useful. Dr. Greg McKenna of the National Bureau of Standards suggested that a modified dumbbell design might be appropriate.

The ASTM specification D-3577-77 (Surgical Rubber Gloves) sets forth minimums for strength without restricting them to either the dumbbell or cut ring specimen.

To equip an independent materials testing laboratory with dies, mallets for the dies and dial micrometer calipers would not exceed $400.

SL TESTING INSTITUTE

Project Number 2635.1
March 10, 1978

TEST REPORT

Prepared for: Mr. Raymond Belsky
290 West End Avenue
New York, New York 10023

Attention of: Mr. Raymond Belsky

Authorized by: Mr. Belsky - Verbal

MATERIAL TESTED

Two groups of Condoms, each group containing 50 specimens. One group from Boonma and one group from Bangladesh.

TEST PERFORMED

Tensile Strength ASTM D412 using ring specimens as specified by ASTM D3492

TEST RESULTS

See Summary of Test Results attached; Tables I and II.

TEST PROCEDURES

Ring specimens measuring 20mm wide were cut from the supplied condoms. The thicknesses were then measured and the specimens tested as follows:

Apparatus:	Instron Tensile Tester TM
Load Range	0 - 20 lbs.
Crosshead Speed:	20 in. /min.
Chart Speed	5 in. /min.
Grips:	Polished steel rods 0.375 in. dia. lubricated with silicone oil for easy slippage

The elongation was calculated from the grip separation at failure.

SL TESTING INSTITUTE

William W. Tenero

William W. Tenero
Physical Testing Specialist

:jcv
Encls. Tables I and II

SL
SPRINGBORN LABORATORIES, INC.

SL TESTING INSTITUTE • ENFIELD, CONN. 06082 • PHONE 203 749-8371 • TWX 710-438-5045

LETTERS AND REPORTS: SL Testing Institute letters and reports are issued for the exclusive use of the clients to whom they are addressed. No quotations from reports or use of the SL Testing Institute name is permitted except as expressly authorized in writing. Letters and reports apply only to the specific materials, products or processes tested, examined or surveyed and are not necessarily indicative of the qualities of apparently identical or similar materials, products or processes. The liability of SL Testing Institute with respect to services rendered shall be limited to the amount of the consideration paid for such services and not include any consequential damages.

TABLE I

SUMMARY OF TEST RESULTS
Bangladesh (Ring Specimens)
DACCA

Sample ID Number		Tensile Strength (MPa)	Elongation (%)	Sample ID Number		Tensile Strength (MPa)	Elongation (%)
1	Black	17.1	685	26	Blue	16.1	660
2	Yellow	9.6	640	27	Black	15.3	660
3	Yellow	12.5	640	28	Blue	17.9	690
4	Green	12.2	660	29	Pink	5.6	510
5	Blue	13.8	660	30	Pink	23.0	800
6	Red	16.3	670	31	Black	15.8	730
7	Yellow	8.0	560	32	Pink	16.5	680
8	Yellow	9.6	630	33	Yellow	11.6	620
9	Yellow	10.9	640	34	Blue	20.9	720
10	Yellow	9.5	650	35	Pink	18.0	700
11	Red	20.1	710	36	Blue	22.2	790
12	Blue	4.4	580	37	Yellow	7.3	600
13	Yellow	6.5	610	38	Black	7.7	600
14	Green	16.6	700	39	Yellow	7.0	590
15	Yellow	9.1	600	40	Green	12.9	640
16	Green	8.0	610	41	Yellow	18.8	740
17	Yellow	14.0	670	42	Yellow	13.1	630
18	Yellow	21.0	680	43	Blue	22.9	740
19	Yellow	8.9	590	44	Pink	10.3	680
20	Blue	15.8	670	45	Black	15.4	710
21	Yellow	9.6	610	46	Yellow	12.3	650
22	Red	15.2	700	47	Yellow	18.4	690
23	Yellow	18.1	670	48	Yellow	11.1	620
24	Black	10.9	630	49	Black	14.0	670
25	Blue	19.0	700	50	Black	9.4	660

LETTERS AND REPORTS: SL Testing Institute letters and reports are issued for the exclusive use of the clients to whom they are addressed. No quotations from reports or use of the SL Testing Institute name is permitted except as expressly authorized in writing. Letters and reports apply only to the specific materials, products or processes tested, examined or surveyed and are not necessarily indicative of the qualities of apparently identical or similar materials, products or processes. The liability of SL Testing Institute with respect to services rendered shall be limited to the amount of the consideration paid for such services and not include any consequential damages.

TABLE II

SUMMARY OF TEST RESULTS
Boonma (Ring Specimens)
THAI

Sample ID Number		Tensile Strength (MPa)	Elongation (%)	Sample ID Number		Tensile Strength (MPa)	Elongation (%)
1	Pink	21.0	790	26	Green	13.6	700
2	Green	16.5	750	27	Yellow	2.2	610
3	Blue	16.3	800	28	Blue	14.6	800
4	Blue	13.5	730	29	Pink	20.4	790
5	Blue	3.5	660	30	Green	19.6	770
6	Yellow	16.4	760	31	Yellow	13.3	680
7	Green	18.6	780	32	Blue	7.3	620
8	Pink	14.9	760	33	Yellow	17.9	720
9	Blue	15.9	820	34	Green	20.5	760
10	Yellow	20.3	730	35	Pink	15.5	720
11	Pink	22.4	770	36	Blue	24.9	840
12	Green	18.3	790	37	Green	18.6	750
13	Blue	14.2	770	38	Blue	14.8	740
14	Yellow	8.5	710	39	Pink	7.9	640
15	Pink	17.4	720	40	Green	19.0	770
16	Green	11.3	670	41	Green	21.4	780
17	Blue	15.4	720	42	Blue	14.8	750
18	Pink	13.1	710	43	Yellow	11.2	680
19	Yellow	19.2	740	44	Green	16.5	730
20	Blue	10.2	670	45	Green	13.1	740
21	Yellow	10.2	650	46	Pink	18.3	770
22	Pink	9.7	670	47	Yellow	24.5	770
23	Blue	11.4	710	48	Green	17.8	770
24	Green	14.5	760	49	Blue	20.6	790
25	Pink	12.0	700	50	Blue	12.7	740

LETTERS AND REPORTS: SL Testing Institute letters and reports are issued for the exclusive use of the clients to whom they are addressed. No quotations from reports or use of the SL Testing Institute name is permitted except as expressly authorized in writing. Letters and reports apply only to the specific materials, products or processes tested, examined or surveyed and are not necessarily indicative of the qualities of apparently identical or similar materials, products or processes. The liability of SL Testing Institute with respect to services rendered shall be limited to the amount of the consideration paid for such services and not include any consequential damages.

SL TESTING INSTITUTE

Project Number 2635.1
March 10, 1978

TEST REPORT

Prepared for: Mr. Raymond Belsky
290 West End Avenue
New York, New York 10023

Attention of: Mr. Raymond Belsky

Authorized by: Mr. Belsky - Verbal

MATERIAL TESTED

Two groups of 50 tensile specimens. One group from Dacca and one group from Thai.

TEST PERFORMED - Corroborative

Tensile Strength ASTM D412 using Type IV Specimens (dumbbell)

TEST RESULTS

See Summary of Test Results attached; Tables I and II

TEST PROCEDURES

Type IV tensile specimens dumbbell were die cut from 100 Condoms at Akwell Industries. They were measured at Akwell then tested at Springborn Laboratories as follows:

Apparatus:	Instron Tensile Tester TM
Load Range:	0 - 5 lbs.
Crosshead Speed	20 in./min.
Chart Speed	2.0 in./min.
Grips	Standard self tightening
Elongation	Read with a steel ruler using 1" bench marks

SL TESTING INSTITUTE

William W. Tenero
William W. Tenero
Physical Testing Specialist

:jcv
Encls. Tables I and II

LETTERS AND REPORTS: SL Testing Institute letters and reports are issued for the exclusive use of the clients to whom they are addressed. No quotations from reports or use of the SL Testing Institute name is permitted except as expressly authorized in writing. Letters and reports apply only to the specific materials, products or processes tested, examined or surveyed and are not necessarily indicative of the qualities of apparently identical or similar materials, products or processes. The liability of SL Testing Institute with respect to services rendered shall be limited to the amount of the consideration paid for such services and not include any consequential damages.

TABLE I

SUMMARY OF TEST RESULTS
Dacca (Type IV Specimens)
dumbbell

	Sample ID Number	Tensile Strength (MPa)	Elongation (%)		Sample ID Number	Tensile Strength (MPa)	Elongation (%)
1	Blue	22.9	670	26	Yellow	27.6	740
2	Black	28.1	840	27	Pink	38.6	750
3	Yellow	36.2	770	28	Blue	39.5	790
4	Green	35.5	790	29	Green	24.5	700
5	Pink	35.7	740	30	Black	45.6	780
6	Blue	38.6	740	31	Blue	46.1	820
7	Green	34.7	730	32	Pink	50.0	720
8	Black	43.4	790	33	Blue	32.7	780
9	Pink	29.2	640	34	Green	37.8	760
10	Yellow	38.3	780	35	Pink	33.1	700
11	Black	47.8	760	36	Yellow	43.1	720
12	Blue	52.1	760	37	Black	40.2	780
13	Yellow	44.5	740	38	Pink	35.3	770
14	Pink	39.7	680	39	Blue	36.0	780
15	Green	34.9	750	40	Black	34.3	780
16	Yellow	40.2	700	41	Green	37.9	740
17	Pink	52.8	770	42	Pink	39.8	740
18	Green	34.8	730	43	Yellow	38.4	750
19	Blue	40.2	750	44	Pink	47.8	730
20	Green	47.4	760	45	Blue	37.9	770
21	Yellow	37.2	750	46	Pink	48.5	750
22	Pink	40.2	730	47	Green	30.6	750
23	Blue	27.8	740	48	Blue	44.1	790
24	Green	32.1	740	49	Black	45.5	760
25	Black	44.1	780	50	Pink	35.4	770

LETTERS AND REPORTS: SL Testing Institute letters and reports are issued for the exclusive use of the clients to whom they are addressed. No quotations from reports or use of the SL Testing Institute name is permitted except as expressly authorized in writing. Letters and reports apply only to the specific materials, products or processes tested, examined or surveyed and are not necessarily indicative of the qualities of apparently identical or similar materials, products or processes. The liability of SL Testing Institute with respect to services rendered shall be limited to the amount of the consideration paid for such services and not include any consequential damages.

TABLE II

SUMMARY OF TEST RESULTS
Thai (Type IV Specimens)
dumbbell

Sample ID Number		Tensile Strength (MPa)	Elongation (%)	Sample ID Number		Tensile Strength (MPa)	Elongation (%)
1	Yellow	36.8	790	26	Yellow	36.1	750
2	Pink	29.8	730	27	Green	25.2	710
3	Blue	36.5	760	28	Pink	38.0	760
4	Pink	30.7	790	29	Green	38.7	810
5	Green	46.4	890	30	Blue	39.0	810
6	Green	42.3	800	31	Blue	35.3	780
7	Pink	29.4	750	32	Yellow	29.5	760
8	Blue	34.7	760	33	Green	29.4	810
9	Green	44.8	830	34	Pink	33.8	790
10	Pink	38.6	800	35	Green	54.7	840
11	Green	34.9	750	36	Pink	37.4	740
12	Pink	29.4	720	37	Blue	23.2	780
13	Green	34.9	780	38	Green	32.0	780
14	Yellow	32.6	790	39	Yellow	30.8	820
15	Green	41.6	810	40	Green	30.9	820
16	Pink	36.0	750	41	Green	44.4	820
17	Blue	32.4	760	42	Pink	52.2	760
18	Yellow	33.3	790	43	Green	41.2	780
19	Green	33.1	730	44	Yellow	29.9	740
20	Blue	33.9	760	45	Blue	36.7	770
21	Yellow	32.9	760	46	Green	31.6	800
22	Green	37.2	810	47	Pink	33.6	800
23	Blue	38.3	770	48	Blue	36.4	840
24	Green	37.7	760	49	Yellow	26.7	830
25	Pink	31.7	720	50	Green	38.9	760

LETTERS AND REPORTS: SL Testing Institute letters and reports are issued for the exclusive use of the clients to whom they are addressed. No quotations from reports or use of the SL Testing Institute name is permitted except as expressly authorized in writing. Letters and reports apply only to the specific materials, products or processes tested, examined or surveyed and are not necessarily indicative of the qualities of apparently identical or similar materials, products or processes. The liability of SL Testing Institute with respect to services rendered shall be limited to the amount of the consideration paid for such services and not include any consequential damages.

AMERICAN NATIONAL STANDARD ANSI/ASTM D 3492 - 77

Standard Specification for RUBBER CONTRACEPTIVES (CONDOMS)[1]

This Standard is issued under the fixed designation D 3492; the number immediately following the designation indicates the year of original adoption or, in the case of revision, the year of last revision. A number in parentheses indicates the year of last reapproval.

1. Scope

1.1 This specification covers requirements for condoms made of rubber latex intended for single use. The scope of the specification does not cover spermicidal or other dressing materials that may be applied to condoms.

1.2 This specification is intended to serve as a guide to permit obtaining condoms of consistent performance. The safe and proper use of condoms is excluded from the scope of this specification.

2. Applicable Documents

2.1 *ASTM Standards:*

D 412 Tests for Rubber Properties in Tension[2]

D 573 Test for Rubber Deterioration in an Air Oven[2]

D 865 Test for Rubber Deterioration by Heating in a Test Tube[2]

D 1076 Specification for Rubber—Concentrated, Ammonia Preserved, Creamed and Centrifuged Natural Latex[2]

2.2 *Other Documents:*

ISO 2859 Sampling Procedures and Tables for Inspection by Attributes[3]

Code of Federal Regulations, Title 21—Food and Drugs[4]

3. Classification

3.1 Condoms covered by this specification shall be of the following types and classes:

Standard I—approximately 52 mm width.
Standard II—approximately 49 mm width.
Type I—smooth surface.
Type II—textured surface.
Form I—round end.
Form II—reservoir end.
Form III—form fitting.
Class A—dry.
Class B—lubricated.

4. Materials

4.1 Condoms shall be manufactured from good quality natural rubber latex conforming to Specification D 1076, and shall be free of embedded grit or discoloration. Condoms may be transparent, translucent, opaque, or colored.

4.2 The condoms and any dressing material applied to them shall not liberate substances that are known to be toxic or otherwise harmful under normal conditions of use. Any dressing materials, or compounding materials shall not have a deleterious effect on the condom. Materials used should be permitted by code of Federal Regulations Title 21, Part 121, Subparts E and F, which list materials safe for use in food packaging.

5. Design

5.1 *Rim*—The open end of the condom shall terminate in an integral rim.

5.2 *Dimensions*—From each lot or batch (not to exceed 144 000 pieces), ten condoms shall be drawn at random. Those condoms tested shall meet the requirements in Table 1.

---

[1] This specification is under the jurisdiction of ASTM Committee D-11 on Rubber and Rubber-Like Materials, and is the direct responsibility of Subcommittee D11.40 on Consumer Rubber Products.

Current edition approved March 25, 1977. Published May 1977. Originally published as D 3492 - 76. Last previous edition D 3492 - 76.

[2] *Annual Book of ASTM Standards*, Part 37.

[3] Available from American National Standards Institute, 1430 Broadway, New York, N. Y. 10018.

[4] Available from the Superintendent of Documents, U. S. Government Printing Office, Washington, D. C. 20402.

If any one fails to meet these requirements, the lot or batch shall be rejected.

5.2.1 For Standard I, Form III condoms having a shaped profile about the closed end, the width of the profile, when laid flat, shall be not more than 70 mm.

5.2.2 For Standard II, Form III condoms, the width in 5.2.1 shall be not more than 62 mm.

5.3 *Procedures for Dimensional Test:*

5.3.1 The length of the condom excluding the teat shall be measured to the nearest 1 mm.

5.3.2 The width of the condom laid flat shall be measured at a distance greater than 85 mm from the rim. The measurement shall be reported to the nearest 0.5 mm.

5.3.3 The thickness shall be measured on condoms from which lubricant has been removed with water or isopropanol and then dried to constant mass. The micrometer shall conform to that specified in Method D 412. When a condom is textured, the thickness shall be measured in a nontextured area. The measurements shall be reported to the nearest 0.01 mm.

5.3.4 The mass of a condom after the thickness measurement shall be measured on a balance and reported to the nearest 1 mg.

6. Physical Requirements

6.1 *Tensile Strength and Elongation at Break.*—The tensile strength and elongation at break shall comply with the following requirements:

	Tensile Strength, min, MPa		Elongation at Break %, min %	
	mean	specimen	mean	specimen
Samples tested less than 12 months after manufacture in the as-sampled condition	24	17	750	675
Sample tested less than 12 months after manufacture and subjected to accelerated aging	19	17	700	625
Sample tested 12 months or more after manufacture in the as-sampled condition	19	17	700	625

From each lot or batch (not to exceed 144 000 pieces), 25 condoms shall be drawn at random for each test. The condoms tested should meet or exceed the appropriate mean values in the table, and if more than 1 out of 25 values for individual specimens falls below specimen values listed, the lot shall be rejected.

6.2 *Determination of Tensile Properties:*

6.2.1 *Conditioning*—Determine the tensile strength and elongation at break of 25 condoms after aging for 166 ± 2 h at 70 ± 2°C, in accordance with Methods D 573 or D 865. If Method D 573 is used, do not age condoms of different composition simultaneously in the same oven. Age condoms as received in original packages. After aging, condition condoms at 23 ± 2°C for not less than 16 h and prepare and test specimens as described in 6.2.2 within 96 h.

6.2.2 *Procedure*—Determine tensile strength and elongation at break of 25 condoms in accordance with Method D 412 using ring specimens as follows:

6.2.2.1 Cut the specimens perpendicular to the length direction of condom with a die having cutting edges 20.0 ± 0.1 mm apart and at least 70 mm long. Cut the specimens in the region of the condom about 80 mm from the rim. In textured condoms, cut the specimen from the nontextured region. Use only specimens cut by a single impact of the die.

6.2.2.2 Measure the thickness of three or more equidistant points around the ring to the nearest 0.001 mm and record the median value for the thickness.

6.2.2.3 Dust the specimen, lay the ring flat, and measure the distance between the two folded edges. Multiply the measurement by two to obtain the circumference of the ring.

6.2.2.4 Test the specimen to failure in a tester having a range of about 100 N at a speed of 8.5 ± 0.8 mm/s. Use roller grips at least 20 mm in width, between 5 and 15 mm in diameter, and lubricated on surfaces contacting the specimen with castor oil or other effective rubber lubricant. Record the force and grip separation at break.

6.2.3 *Calculations:*

6.2.3.1 Calculate the tensile strength as follows:

$$T = F/2WD$$

where:

T = tensile strength, MPa,
F = breaking force, N,
W = width of ring, 20 mm, and
D = single thickness of wall, mm.

6.2.3.2 Calculate the elongation at break as follows:

$$E = 100\ [(2D + G - C)/C]$$

where:
E = elongation at break, %,
D = distance between centers of the rollers at break, mm,
G = circumference of one roller, mm, and
C = circumference of the specimen, mm.

7. Quality Assurance

7.1 *Responsibility for Inspection* – Unless otherwise indicated, the supplier is responsible for the performance of all inspection requirements.

7.2 *Leakage:*

7.2.1 *Sampling* – Inspection for leakage shall follow ISO 2859, General Inspection Level I for an acceptable quality level (AQL) of 0.4 %. Single, double, and multiple sampling plans for normal inspection are given in Table 2 for four ranges of lot sizes. Multiple sampling is preferable and shall be used in reference tests.

7.2.2 *Procedure* – Fill each condom in the sample with 300 cm³ of water. Twist rim end to form a seal. Wipe outside surface dry by rolling on filter paper or equivalent absorbant material. Inspect for holes. Reject lots of condoms that are too small to hold 300 cm³ of water or which have a number of leaks equaling or exceeding the appropriate rejection number in Table 2.

8. Marking

8.1 *Condom Identification* – Each condom must be legibly marked to include the name or trademark of the manufacturer and the date (month and year) of manufacture, coded or explicit.

8.2 *Package Identification* – Packaging shall have the name and address of the manufacturer or distributor, and the country of manufacture.

9. Packaging and Storage

9.1 Unless otherwise specified, packaging shall be in accordance with manufacturer's commercial practice.

9.2 Proper packaging should protect condoms during storage for 10 years or more. Nevertheless, condoms should not be kept in storage longer than necessary, especially in warm climates, and should be stored in a cool place in containers that protect them from mechanical damage.

9.3 Condoms shall not be allowed to come into contact with oil-based antiseptics, phenols and their derivatives, petroleum-based products, or other materials harmful to rubber.

10. Retest

10.1 One retest for design and requirements is permissible before final rejection of lots not conforming to Sections 5 and 6.

10.2 No retest is permitted for lots not conforming to Section 7.

TABLE 1 Dimensional Requirements

	Length, mm	Width, mm	Thickness, mm	Mass, g, max
Standard I, Type I	180 ± 10	52 ± 3	0.04 ± 0.09	1.70
Standard II, Type I	160 ± 10	49 ± 2	0.04 ± 0.07	1.50
Standard I, Type II	180 ± 10	52 ± 3	0.04 ± 0.09	1.95
Standard II, Type II	160 ± 10	49 ± 2	0.04 ± 0.09	1.75

TABLE 2 Normal Inspection Sampling Plans for Water Leakage Test[A]

Lot Size 35 000 and less				Lot Size 35 001 to 150 000			
Type of Sampling Plan[B]	Cumulative Sample Size	AC[C]	RE[C]	Type of Sampling Plan[B]	Cumulative Sample Size	AC[C]	RE[C]
Single (11A,K)	125	1	2	Single (11A,L)	200	2	3
Double (111A,K)	80	0	2	Double (111A,L)	125	0	3
	160	1	2		250	3	4
Multiple (IVA,K)	32	[D]	2	Multiple (IVA,L)	50	[D]	2
	64	[D]	2		100	0	3
	96	0	2		150	0	3
	128	0	3		200	1	4
	160	1	3		250	2	4
	192	1	3		300	3	5
	224	2	3		350	4	5
Lot Size 150 001 to 500 000				Lot Size 500 001 and over			
Single (IIA,M)	315	3	4	Single (IIA,N)	500	5	6
Double (IIIA,M)	200	1	4	Double (IIIA,N)	315	2	5
	400	4	5		630	6	7
Multiple (IVA,M)	80	[D]	3	Multiple (IVA,N)	125	[D]	4
	160	0	3		250	1	5
	240	1	4		375	2	6
	320	2	5		500	3	7
	400	3	6		625	5	8
	480	4	6		750	7	9
	560	6	7		875	9	10

[A] Do not use samples with pinholes 25 mm from the open end.
[B] The table and sample size code letter in ISO 2859 are given in parentheses. The sampling plans are based on an AQL of 0.40 %.
[C] The acceptance (AC) and rejection (RE) numbers represent defectives.
[D] Acceptance not permitted.

The American Society for Testing and Materials takes no position respecting the validity of any patent rights asserted in connection with any item mentioned in this standard. Users of this standard are expressly advised that determination of the validity of any such patent rights, and the risk of infringement of such rights, is entirely their own responsibility.

ASTM AMERICAN NATIONAL STANDARD ANSI/ASTM D 412 - 75

Standard Test Methods for RUBBER PROPERTIES IN TENSION[1]

This Standard is issued under the fixed designation D 412; the number immediately following the designation indicates the year of original adoption or, in the case of revision, the year of last revision. A number in parentheses indicates the year of last reapproval.

These methods have been approved for use by agencies of the Department of Defense to replace methods 4001, 4116, 4121, and 4411 of Federal Test Method Standard No. 601 and for listing in the DoD Index of Specifications and Standards.

1. Scope

1.1 These methods cover the tension testing of rubber at various temperatures. Measurements of tensile stress at given elongations, tensile strength, ultimate elongation, and tensile set are included. The methods are not applicable to the testing of ebonite and similar hard, low-elongation materials.

1.2 The methods appear as follows:

	Sections
Method A — Dumbbell and Straight Specimens	11 to 14
Method B – Cut Ring Specimens	15 to 18

1.3 The agreement between data from Method A and Method B specimens is generally very good. However, when such specimens are used, the results should be compared only with those obtained from specimens of similar size and shape.

2. Applicable Documents

2.1 *ASTM Standards:*

D1349 Recommended Practice for Rubber – Standard Temperatures and Atmospheres for Testing and Conditioning[2]

D3182 Recommended Practice for Rubber – Materials, Equipment, and Procedures for Mixing Standard Compounds and Preparing Standard Vulcanized Sheets[3]

D3183 Recommended Practice for Rubber – Preparation of Pieces for Test from Other Than Standard Vulcanized Sheets[3]

E 4 Verification of Testing Machines[4]

3. Summary of Methods

3.1 The methods start with a piece taken from the sample and includes: (*1*) the preparation of the specimen and (*2*) testing of the specimen. Specimens may be in the shape of a dumbbell, ring, or straight piece of uniform section and may be of various sizes.

3.2 Measurements of tensile stress, tensile strength, and ultimate elongation are made on specimens that have not been prestressed. Tensile stress and tensile strength are based on the original cross sectional area of a uniform section of the specimen.

3.3 Measurement of tensile set is made after a specimen has been extended and allowed to retract by a prescribed procedure without prestressing. Measurement of set after break is also described.

4. Significance

4.1 The tensile properties of rubber are not intrinsic characteristics, but depend on both the material and the conditions of test such as rate of extension, temperature, humidity, geometry of specimen, inertia of dynamometer

---

[1] These methods are under the jurisdiction of ASTM Committee D-11 on Rubber and Rubber-Like Products, and are the direct responsibility of Subcommittee D11.10 on Physical Testing.

Current edition approved Nov. 28, 1975. Published February 1976. Originally published as D 412 - 35 T. Last previous edition D 412 - 68.

[2] *Annual Book of ASTM Standards*, Parts 37 and 38.

[3] *Annual Book of ASTM Standards*, Part 37.

[4] *Annual Book of ASTM Standards*, Part 41.

[5] Detailed drawings available from ASTM Headquarters, 1916 Race St., Philadelphia, Pa. 19103. Request Adjunct No. 12-404120-00.

in tester, and environmental or mechanical preconditioning. For this reason, the tensile properties are only relative indicators of quality and various rubbers should only be compared when tested under the same conditions. The report should include a statement of the test conditions.

4.2 Modest changes in rate of extension caused by type of tester (pendulum versus inertialess) have little or no effect on the tensile properties of most rubbers.

4.3 Temperature may have a significant effect on tensile properties and therefore should be controlled.

4.4 For most rubbers, humidity has a small effect that can be neglected. There are sensitive rubbers that necessitate humidity conditioning.

4.5 Tensile strength and ultimate elongation depend on the volume of the specimen (or the volume of the restricted portion in the case of dumbbells) and stress concentration due to shape of specimens. For ring specimens, ultimate elongation is based on inside circumference where the stress is highest. Elongation of ring specimens theoretically should be based on mean circumference to give values for tensile stress at a given elongation in accord with that determined with dumbbell or straight specimens.

4.6 Inertia-type dynamometers may give erroneous results if the load capacity of the tester is too high or too low for the material being tested, or if there is friction. Inertialess dynamometers have greater versatility, but calibration may be less stable.

4.7 Tensile set represents deformation, after stretching and retraction, that is partly permanent and partly recoverable. For this reason, the periods of extension and recovery and other conditions of test must be controlled to obtain comparable results.

5. Definitions

5.1 *elongation*—extension produced by a tensile stress.

5.2 *elongation, ultimate*—the elongation at the time of rupture.

5.3 *piece*—the portion of the sample that is prepared for testing.

5.4 *sample*—the portion or unit(s) selected to represent the lot.

5.5 *set after break*—the tensile set of a specimen stretched to rupture.

5.6 *specimen*—a piece of material appropriately shaped and prepared so that it is ready to use for a test.

5.7 *tensile set*—the extension remaining after a specimen has been stretched and allowed to retract in a specified manner expressed as a percentage of the original length.

5.8 *tensile strength*—the maximum tensile stress applied during stretching a specimen to rupture.

5.9 *tensile stress*—a stress applied to stretch a test piece (specimen).

5.10 *tensile stress at given elongation*—the stress required to stretch the uniform cross section of a test specimen to a given elongation.

6. Apparatus

6.1 *Testing Machine*—Tension tests shall be made on a power-driven machine so equipped that a uniform rate of grip separation at 8.5 ± 0.8 mm/s (20 ± 2 in./min) (Note 1) for at least 750 mm (30 in.) is maintained, and having a suitable dynamometer and an indicating or recording device for measuring the applied force within ±2 %. If the capacity range cannot be changed during a test as in the case of pendulum dynamometers, the applied force at break shall be measured within ±2 %, and the smallest tensile force measured shall be accurate to within ±10 %. If the dynamometer is of the compensating type for measuring tensile stress directly, means shall be provided to adjust for the cross-sectional area of the specimen. The response of the recorder shall be sufficiently rapid that the applied force is measured with the requisite accuracy during the extension of the specimen to rupture. If the tester is not equipped with a recorder, a device shall be provided that indicates after rupture the maximum force applied during extension. Testers shall be capable of measuring elongation in increments of 10 %.

NOTE 1—A rate of separation of 17.0 ± 1.6 mm/s (40 ± 4 in./min) may be used in routine work (with notation of the speed used made on the report), but in case of dispute, the rate shall be 8.5 ± 0.8 mm/s (20 ± 2 in./min).

6.2 *Test Chamber for Elevated and Low Temperature*—The test chamber shall con-

form to the following requirements:

6.2.1 Air shall be circulated through the chamber with a speed of 1 to 2 m/s (200 to 400 ft/min) at the location of the grips and specimens, and maintained within 2°C of the specified temperature.

6.2.2 A calibrated sensing device shall be located near the grips for measuring the actual temperature.

6.2.3 The chamber shall be vented to an exhaust system or the outside atmosphere to remove any toxic fumes liberated at high temperatures.

6.2.4 Provision shall be made for suspending specimens vertically near the grips for conditioning prior to test. The specimens should not touch each other or the sides of the chamber except for momentary contact when agitated by the circulating air.

6.2.5 Suitable fast-acting grips for manipulation at high or low temperature shall be provided to permit placing test specimens in the grips or around the spindles, whichever is applicable, in the shortest time possible to minimize any change in the temperature of the chamber.

6.2.6 The dynamometer shall be suitable for use at the temperature of test or it shall be thermally insulated from the chamber.

6.2.7 Provision shall be made for measuring elongation of specimens in the chamber. If a scale is used to measure the extension between bench marks, the scale shall be located parallel and close to the grip path during extension and shall be controlled from outside the chamber.

6.3 *Micrometers*—The dial micrometer used to measure the thickness of flat specimens shall be capable of exerting a pressure of 25 ± 5 kPa (3.6 ± 0.7 psi) on the specimens (Note 3) and measuring the thickness to within ±0.025 mm (0.001 in.). For flat specimens the foot in contact with Die C specimens shall be at least 6 mm (0.236 in.) in diameter. The anvil of the micrometer shall be at least 35 mm (1.4 in.) in diameter and shall be parallel to the face of the contact foot. For ring specimens, the base used to measure the radial width shall be at least 12 mm (0.5 in.) long and 15.5 ± 0.3 mm (0.61 ± 0.01 in.) in diameter. Curved feet to fit the curvature of the ring may also be used.

NOTE 2—Dial micrometers exerting a force c 0.80 ± 0.15 N (85 gf) on a circular foot 6.35 mr (0.25 in.) in diameter, or 0.20 ± 0.04 N (20 gf) on circular foot 3.2 mm (0.125 in.) in diameter con form to this pressure requirement. A micromete should not be used to measure the thickness c specimens narrower in width than the diameter c the foot unless the contact pressure is properl adjusted.

6.4 *Apparatus for Tensile Set Test*—Th testing machine described in 6.1 or an appara tus similar to that shown in Fig. 1 may b used. A stop watch or other suitable timin device that will register the time in minute for at least 30 min shall be provided. A scal or other device shall be provided for measur ing tensile set to within 1 %.

7. Selection of Test Specimens

7.1 The following information should b considered in making a selection:

7.1.1 Since "grain" will have a bearing or stress-strain results, dumbbell or straigh specimens should be cut so the lengthwise portion of the specimen will be parallel with the mill direction when known. Ring specimens enable the tensile stress with and across the grain to be averaged.

7.1.2 Ring specimens enable elongation to be measured by grip separation, but the elongation across the radial width of ring specimens is not uniform. To minimize this effect, the width of ring specimens (as is the case with the Type 1 ring) must be small compared to the diameter.

7.1.3 Straight specimens tend to break in the grips and are used only when it is not feasible to prepare another type of specimen.

7.1.4 The size of specimen will be influenced by the material, test equipment, and the piece available for test. A longer specimen may be used for rubbers having low ultimate elongations to improve the precision of measurement.

8. Calibration of Testing Machine

8.1 Calibrate the testing machine in accordance with Procedure A of Methods E 4. If the dynamometer is of the strain-gage type, calibrate the tester at one or more forces daily, in addition to the requirements in Sections 7 and 18 of Methods E 4. Testers having pendulum dynamometers may be calibrated as follows:

place one end of a dumbbell specimen in the upper grip of the testing machine. Remove the lower grip from the machine and attach to the specimen. To this lower grip, attach a hook suitable for holding known masses. Suspend a mass from the hook on the specimen in such a way (Note 3) as to permit the mass assembly to rest on the machine grip holder. If the machine has a dynamometer head of the compensating type, calibrate it at two or more settings of the compensator. Start the motor and run as in normal testing until the mass assembly is freely suspended by the specimen. If the dial or scale (whichever is normally used in testing) does not indicate the force applied (or its equivalent in stress for compensating tester) within the specified tolerance, thoroughly check the machine for excess friction in the bearings and all other moving parts. After eliminating as nearly as possible all the excess friction, recalibrate the machine at a maximum of three points, using known masses to produce forces of approximately 10, 20, and 50 % of capacity. The mass of the lower grip and hook shall be included as part of the calibration mass. If pawls and ratchet are used during test, they should also be used during the calibration. Friction in the head can be checked by calibrating with the pawls up.

NOTE 3—It is advisable to provide a means for preventing the masses from falling to the floor in case the dumbbell should break.

8.2 A rapid and frequent approximate check on accuracy of the tensile tester calibration may be obtained by using a spring calibration device.

9. Test Temperature

9.1 Unless otherwise specified, the standard temperature for testing shall be 23 ± 2°C (73.4 ± 3.6°F). If the material is affected by moisture, the relative humidity shall be maintained at 50 ± 5 % and the specimen shall be conditioned for at least 24 h, prior to testing. When testing at some other temperature is required, the temperature specified shall be one of those listed in Recommended Practice D 1349, and the report shall include a statement of the temperature at which the test was made. Specimens shall be conditioned for at least 3 h when the test temperature is 23 ± 2°C.

9.2 For exposure at any temperature above standard (see 9.1), condition Method A specimens for 10 ± 2 min and Method B specimens for 6 ± 2 min (Note 4). Place each specimen in the test chamber at intervals ahead of testing so that all specimens of a series will be in the test chamber the same length of time, that is, if 30 s is required to run the test for Method A specimens, the first specimen placed in the test chamber 10 min prior to testing, would be followed by other specimens at 30 s intervals. The conditioning time at elevated temperature must be limited to avoid additional curing or heat aging.

NOTE 4: Caution—Suitable heat- or cold-resistant gloves should be worn for hand and arm protection when testing at high or low temperatures. At high temperatures, an air mask is very desirable when the door of the chamber is opened to insert specimens; toxic fumes may be present and should not be inhaled.

9.3 For testing at sub-ambient temperature, condition the specimen at least 10 min prior to testing.

10. Characteristics of Piece Tested

10.1 The median of the values for three specimens shall be taken as the characteristics of the piece of rubber tested, except that under the following conditions, the median of the values for five specimens shall be used:

10.1.1 If one or two values do not meet the specified requirements when testing for compliance with specifications.

10.1.2 If referee tests are being made.

METHOD A—DUMBBELL AND STRAIGHT SPECIMENS

11. Apparatus

11.1 *Dies*—The shapes and dimensions of dies for preparing dumbbell specimens shall conform with those shown in Fig. 2. The inside faces in the reduced section shall be polished and perpendicular to the plane formed by the cutting edges for a depth of at least 5 mm (0.2 in.). The dies shall be sharp and free of nicks in order to prevent ragged edges on the specimen.

NOTE 5—Careful maintenance of die cutting edges is of extreme importance and can be obtained by light daily honing and touching up the cutting edges with jewelers' hard honing stone. The condition of the die may be judged by investigating the rupture point on any series of broken specimens. When broken specimens are removed from the clamps of the testing machine, it is advan-

tageous to pile these specimens and note if there is any tendency to break at or near the same portion of each specimen. Rupture points consistently occurring at the same place may be an indication that the die is dull, nicked, or bent at that particular position.

11.2 *Bench Marker*, having two parallel straight marking surfaces ground smooth in the same plane. The surfaces shall be between 0.05 and 0.08 mm (0.002 and 0.003 in.) in width and at least 15 mm (0.6 in.) in length. The angles between the marking surfaces and the sides shall be at least 75 deg. The distance between the centers of the marking surfaces shall be within 1 % of the required distance.

11.3 *Ink Applicator*, having plane unyielding surface (for example, hardwood, plate glass, or plastic). The ink shall have no deteriorating effect on the specimen and shall be of contrasting color to that of the specimen.

11.4 *Grips*—The tester shall have two grips, one of which shall be connected to the dynamometer.

11.4.1 Grips for testing dumbbell specimens shall tighten automatically and exert a uniform pressure across the gripping surfaces, increasing as the tension increases in order to prevent uneven slipping and to favor failure of the specimen in its constricted section. Constant-pressure pneumatic-type grips are also satisfactory. If possible, at the end of each grip, a positioning device is recommended for inserting specimens to the same depth in the grip and aligning them with the direction of pull.

11.4.2 Grips for testing straight specimens shall be either constant-pressure pneumatic, wedged, or toggle type designed to transmit the applied force over a large surface area of the specimen.

12. Preparation of Test Specimens

12.1 *Dumbbell Specimens*—The piece of rubber to be tested shall, whenever possible, be flat, not less than 1.5 mm (0.060 in.) nor more than 3 mm (0.120 in.) in thickness and of a size that will permit cutting a specimen by one of the standard methods. If obtained from a manufactured article, the piece of rubber shall be free of surface roughness, fabric layers, etc., in accordance with the procedure described in Recommended Practice D 3183. All specimens shall be cut so the lengthwise portion of the specimen will be parallel with the grain unless otherwise specified with the exception that specimens of belts wider than 300 mm (12 in.) of sheet packing, of hose, or of dredging sleeves more than 100 mm (4 in.) in inside diameter shall be taken in the transverse direction. In the case of specially cured sheets prepared in accordance with Recommended Practice of D 3182, the specimen shall be 2.0 ± 0.2 mm (0.080 ± 0.008 in.) in thickness and died out in the direction of the grain. Dumbbell specimens shall conform in shape to those shown in Fig. 2. Unless otherwise specified, Die C (Fig. 2) shall be used to prepare the specimens. In all cases, the cutting of test specimens shall be done with a single stroke of the cutting tool so as to assure obtaining smoothly cut surfaces.

12.1.1 *Marking Dumbbell Specimens*—Dumbbell specimens shall be marked with the bench marker described in 11.2. The sample shall be under no tension at the time it is marked. Marks shall be placed on the reduced section of the specimen equidistant from its center and perpendicular to its longitudinal axis. The distance between centers of the marks shall be within 1 % of either 25.00 ± 0.25 mm (or 1.00 ± 0.01 in.) on specimens cut with Dies C and D, and either 50.00 ± 0.50 mm (or 2.00 ± 0.02 in.) on specimens cut with the other dies shown in Fig. 2. Bench marks 20 mm (0.79 in.) apart may be used to measure elongation where scales graduated in millimetres are required.

12.1.2 *Measuring Dumbbell Specimens*—Three measurements shall be made for thickness, one at the center and one at each end of the reduced section of the specimen. The median of the three measurements shall be used as the thickness in calculating the cross-sectional area, except that specimens for which the differences between the maximum and minimum thickness exceeds 0.08 mm (0.003 in.) shall be discarded. The width of the specimen shall be taken as the distance between the cutting edges of the die in the restricted section.

12.2 *Straight Specimens*—Straight specimens may be prepared where it is not practical to cut either a dumbbell or a ring specimen, as in the case of a narrow rubber strip, small tubing, or electrical insulation. These

specimens shall be of sufficient length to permit their installation in the grips used in the test. Bench marks shall be placed on the specimens as described for dumbbell specimens in 12.1.1 to determine the cross sectional area of straight specimens in the form of tubes, the weight, length, and density of the specimen may be determined. The cross-sectional area may then be calculated from the measurements as follows:

$$A = M/DL$$

where:

A = cross-sectional area,
M = mass,
D = density, and
L = length.

13. Procedure

13.1 *Determination of Tensile Stress, Tensile Strength, and Ultimate Elongation*—Place dumbbell or straight specimens in the grips of the testing machine, using care to adjust the specimen symmetrically in order that the tension will be distributed uniformly over the cross section. If tension is greater on one side of the specimen than on the other, the bench marks will not remain parallel and maximum strength of the rubber will not be developed. Unless otherwise specified, the rate of grip separation shall be 8.5 ± 0.8 mm/s (20 ± 2 in./min) (Note 1). Start the machine and note continuously the distance between the two bench marks, taking care to avoid parallax. Record the stress at the elongation specified and at the time of rupture, preferably by means of an autographic or spark recorder. At rupture, measure and record the elongation to the nearest 10 % on the scale.

13.2 *Determination of Tensile Set*—Place the specimen in the grips of the testing apparatus and adjust symmetrically so as to distribute the tension uniformly over the cross section. Separate the grips at a rate of speed as uniformly as practicable, requiring about 15 s to reach the specified elongation. Then hold the specimen at the specified elongation for 10 min, release quickly without allowing it to snap back, and allow to rest for 10 min. At the end of the 10-min rest period, measure the distance between the bench marks to the nearest 1 % of the original length and calculate the tensile set. In stretching the specimen, it has been found convenient to use a measured rod of a length equal to the exact distance required between the two bench marks. Holding the rod behind the test specimen while it is being stretched simplifies the operation and reduces the chance of stretching the specimen more than the required amount. Use a stop watch or equivalent timer for recording the time required for the various operations.

13.3 *Determination of Set at Break*—Set at break is the set determined on the specimen when stretched to rupture. Ten minutes after the specimen is broken, fit the two pieces carefully together so that they are in contact over the full area of the break. Measure the distance between the bench marks and calculate the set.

14. Calculation

14.1 Calculate the tensile stress as follows:

$$\text{Tensile stress} = F/A \qquad (1)$$

where:

F = observed force, and
A = cross-sectional area of the unstretched specimen.

14.2 Calculate the tensile strength by letting F in Eq 1 be equal to the force required to break the specimen. Tensile stress and tensile strength are expressed in either megapascals or pounds-force per square inch.

14.3 Calculate the elongation as follows:

$$\text{Elongation, \%} = [(L - L_o)/L_o] \times 100 \qquad (2)$$

where:

L = observed distance between the bench marks on the stretched specimen, and
L_o = original distance between the bench marks.

14.4 Calculate the ultimate elongation by letting L in Eq 2 be equal to the distance between the bench marks at the time of rupture.

14.5 Calculate the tensile set by substituting the distance between the bench marks after the 10-min retraction period for L in Eq 2.

METHOD B—CUT RING SPECIMENS

15. Apparatus

15.1 *Specimens Cut from Flat Sheets:*

15.1.1 *Cutter*—The cutter shown in Fig. 3

is recommended. The cutter is rotated by a machine having sufficient torque to maintain a speed of at least 31 rad/s (300 rpm) during cutting and having precision bearings and spindle for holding the cutter with a maximum run-out of 0.010 mm (0.0004 in.). The machine should have a base perpendicular to the spindle, and preferably an arrangement for positioning the rubber piece with respect to the spindle.

15.1.2 *Rubber Holding Device*—A vacuum holding plate similar to the one shown in Fig. 4 is recommended. The plate is clamped to the base or table of the cutting machine. Other size plates may be used depending on the size of the rubber piece. The holding device has plane, parallel upper and lower surfaces, and is connected to a source of reduced pressure to hold the rubber piece firmly on the plate without distortion.

15.2 *Specimens Cut from Tubes:*

15.2.1 *Cutter*—A sharp knife edge or razor blade held firmly in the tool post of a lathe.

15.2.2 *Mandrel*—A hard rubber or wood mandrel to fit the tube, used to hold and rotate the rubber piece in the lathe.

15.3 *Testing Machine Grips*—The assembly shown in Fig. 5 is recommended to extend the ring. The shaft is 4.75 mm (0.187 in.) in diameter. The surface of the shaft should be lubricated with a material that does not affect the rubber, particularly for tests at elevated temperatures.

15.4 *Circumference Gages*—A cone or frustum of a cone may be used to measure the inside diameter of ring specimens and shall have steps having diametric intervals not exceeding 2 % of the diameter to be measured. Alternatively, for rings cut with the cutter shown in Fig. 3, go-no-go gages may be used.

16. Preparation of Test Specimens

16.1 The ring specimen shall be prepared from flat sheets not less than 1.0 mm (0.04 in.) nor more than 3.0 mm (0.12 in.) in thickness and of a size that will permit cutting the specimen. Ring specimens shall conform to the dimensions shown in Fig. 3. Unless otherwise specified, the Type I cut ring shall be used.

16.1.1 Place the blades in their proper slots in the holder, and using the blade-setting gage, set the blade depth as indicated in Fig. 3. Be extremely careful that the blade alignment is good. Place the cutter in position in the drill press and adjust the machine so that the bottom of the blade holder is approximately 13 mm (0.5 in.) above the rubber slab on the hold-down plate.

16.1.2 Set the stop on the vertical travel so that the tips of the cutting blades just penetrate the rubber piece. Lower the cutter at a steady uniform rate until it reaches the stop, then bring it back to its initial position. Be sure that when the blade holder is fully lowered the bottom of the holder does not contact the rubber. For specimens that are thicker than 2.25 mm (0.090 in.) the cutting blades will have to be adjusted. A mild soap solution for lubrication may be used on the cutting blades when cutting the ring specimen.

16.2 *Preparation from Tubes*—The tube is placed on a mandrel, preferably slightly larger than the inner diameter of the tube so it is held firmly. The mandrel and tube are rotated in a lathe and rings of desired width are cut. Thin-walled rubber tubes that can be laid flat may be cut with dies having two parallel blades.

16.3 *Rubber Rings*—Products in the form of rings are tested without special preparation if their size permits testing in the tensile tester. Such products include ring seals and rubber bands.

16.4 *Measuring Ring Specimens*—The radial width is measured at three locations distributed around the circumference of the ring using the micrometer as specified in 6.3. The thickness of the disk cut from the inside of the ring is measured with the micrometer described in 6.3. The cross-sectional area is calculated from the medians of three width and three thickness measurements. Alternatively to measuring the width and thickness, the area may be determined from the mass, density, and mean circumference of the ring.

NOTE 6—For rings of known density and mean circumference, the measurement of mass is more rapid and reliable for determining area than dimensional measurements.

16.5 *Ring Circumference*—The inside circumference of ring specimens can be determined by the stepped cone or go-no-go gages

described in 15.4, employing no stress in excess of that necessary to overcome any ellipticity of the ring. The mean circumference is obtained by adding to the inside circumference the product of the radial width and pi (3.14).

NOTE 7—Types 1, 2, and 3 ring specimens in Fig. 3 are designed for autographic measurement of elongation. Type 1 has an inside circumference of 2 in. so that spindle separation in inches equals the ultimate elongation in percent. Type 2 has a mean circumference of 100 mm so that each 50 mm of grip separation equals 100 % elongation. Type 3 has a mean circumference of 4 in. so that each 2 in. of grip separation equals 100 % elongation.

17. Procedure

17.1 *Determination of Tensile Stress, Tensile Strength, and Ultimate Elongation:*

NOTE 8—For materials having a yield point under 20 % elongation when tested at 8.50 ± 0.08 mm/s (20 ± 2 in./min), the rate shall be reduced to 0.85 mm/s (2.0 in./min). If the material still has a yield point under 20 % elongation, the rate shall be reduced to 0.085 mm/s (0.20 in./min). The rate of separation shall be reported.

17.1.1 Place the ring specimen around the lubricated spindles. The initial setting between the spindles from center to center shall be adjusted so that a minimum of tension is placed on the specimen prior to testing. Unless otherwise specified, spindle separation shall be 8.5 ± 0.8 mm/s (20 ± 2 in./min). Start the test machine and record continuously the distance between the centers of the spindles. If the stress and strain are not autographically recorded, predetermine the distance between the centers of the spindles as prescribed in 17.4 for the elongation specified for the material under test.

17.1.2 Record the stress at the predetermined distance between the centers of the spindles and at the time of rupture, preferably by means of an autographic recorder. At rupture, measure the distance between the centers of spindles to within 2.5 mm (0.1 in.) and record.

18. Calculation

18.1 Calculate the tensile stress as follows:

$$\text{Tensile stress} = F/2A$$

where:

F = observed force, and
$2A$ = twice the cross-sectional area.

18.2 Calculate the tensile strength by letting F in the above equation for tensile stress be equal to the force required to break the specimen.

18.3 Calculate the ultimate elongation as follows:

$$E = 100\,(2D + G - C)/C$$

where:

E = ultimate elongation, %,
C = inside circumference of ring specimen,
D = distance between centers of the spindles and
G = circumference of one spindle.

18.4 Determine spindle separation for elongation in determining the tensile stress at a specified elongation as follows:

$$D = {}^1/_2[(EM/100) + C - G]$$

where:

D = distance between spindle centers for specified elongation, and
M = mean circumference of ring specimen.

19. Report

19.1 The report shall include the following:

19.1.1 Results calculated in accordance with Section 14 or 18, whichever is applicable.

19.1.2 Type of test specimen,

19.1.3 Rate of extension, if other than 8.50 ± 0.08 mm/s (20 ± 2 in./min),

19.1.4 Temperature and humidity of test room, if other than 23 ± 2°C and 50 ± 5 %, and

19.1.5 Temperature of testing, if other than 23 ± 2°C (73.4 ± 3.6°F).

19.2 In the case of a dispute or if referee tests are being made, the following items shall also be reported:

19.2.1 All observed and recorded data on which the calculations are based,

19.2.2 Type of testing machine,

19.2.3 Date of test, and

19.2.4 Date of vulcanization of the rubber, if known.

20. Precision-Method A

20.1 *Tensile Stress, Tensile Strength, and Ultimate Elongation* (Note 9)—Column 3 of Table 1 contains the coefficients of variation that have been estimated at a minimum of 61

degrees of freedom (DF) for the ranges of property levels in Column 2. In Column 4 are the differences (ranges) that should be considered acceptable for two results. These precision data are based on tests conducted exclusively with vulcanized sheets prepared by the National Bureau of Standards.

NOTE 9—These precision data are based on results from 69 (67 to 72) laboratories, 10 materials (9 for tensile stress) covering the range of properties tabulated above, and short-term replication, consisting of tests on 2 sheets of essentially the same material, usually on the same day rather than on separate days. Therefore, any day-to-day variability due to differences in set-up, etc., over and above the variability sheet-to-sheet on the same day, is largely reflected in the multilaboratory precision rather than in the single-operator precision.

20.2 *Tension Set and Set After Break* (*Note 10*)—Column 3 of Table 2 contains the coefficients of variation estimated for the ranges indicated in Column 2 of the properties listed in Column 1. In Column 4 are the differences (ranges) that should be considered acceptable for two results. The data are based on tests conducted with vulcanized sheets prepared by different laboratories.

NOTE 10—These precision data are approximations based on limited data from tests with 6 specimens from each of 9 materials at 7 laboratories. The minimum degrees of freedom are estimated as 76 and 10 for single-operator and multilaboratory precision, respectively.

TABLE 1 Precision of Tensile Strength, Tensile Stress, and Ultimate Elongation (Method A)

Property	Applicable Range of Property	Coefficient of Variation, % of mean, S %	Acceptable Range of Two Results, % of mean D2S %
Single-operator (repeatability):			
Tensile strength	from 16.5 to 32.0 MPa (2400 to 4600 psi)	3.0	8.0
Tensile stress, at 300 % elongation	from 5.5 to 17.0 MPa (800 to 2500 psi)	3.0	8.0
Ultimate elongation	from 450 to 740 %	3.0	7.0
Multilaboratory (reproducibility):			
Tensile strength	from 16.5 to 32.0 MPa (2400 to 4600 psi)	6.0	16.0
Tensile stress, at 300 % elongation	from 5.5 to 17.0 MPa (800 to 2500 psi)	6.0	17.0
Ultimate elongation	from 450 to 740 %	5.0	13.0

TABLE 2 Precision of Tension and Permanent Set

Method	Applicable Range, %	Coefficient of Variation, % of mean, S %	Acceptable Range of Two Results, % of mean, D2S %
Single-operator (repeatability):			
Permanent set after break	from 4 to 10	11	30
	from 11 to 18	6	17
	from 19 to 32	5	13
Tension set	from 2 to 7	8	23
	from 8 to 17	3	8
	from 18 to 26	3	8
Multilaboratory (reproducibility):			
Permanent set after break	from 4 to 10	23	66
	from 11 to 18	14	44
	from 19 to 32	11	33
Tensile set	from 2 to 7	31	92
	from 8 to 17	17	53
	from 18 to 26	13	40

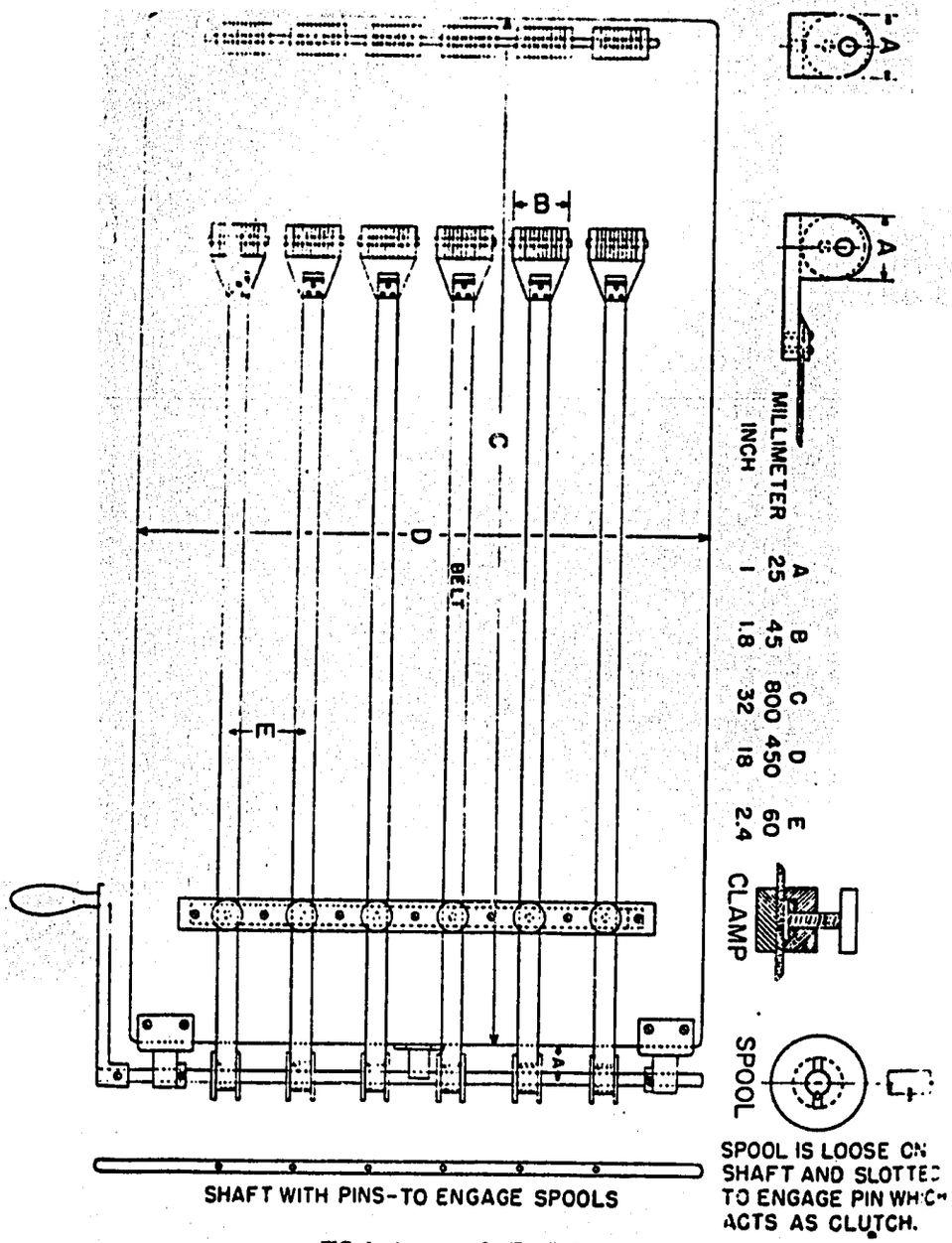

FIG. 1 Apparatus for Tensile Set Test.

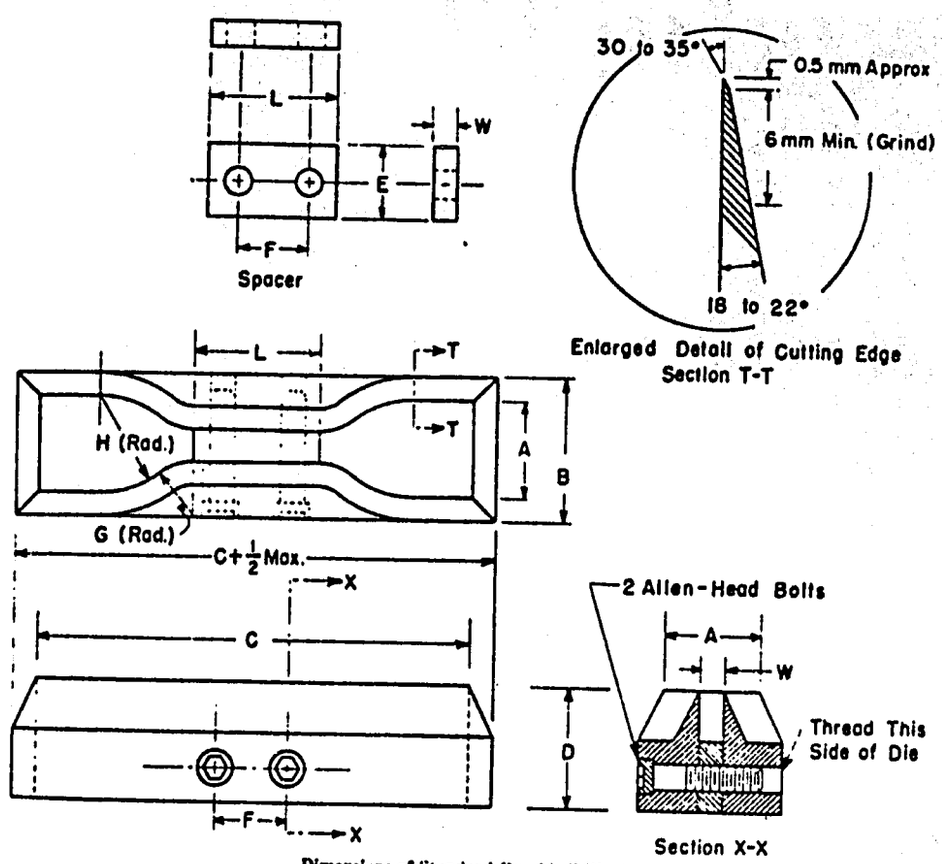

Dimensions of Standard Dumbbell Dies[a]

Dimension	Units	Tolerance	Die A	Die B	Die C	Die D	Die E	Die F
A	mm	±1	25	25	25	16	16	16
	in.	±0.04	1	1	1	0.62	0.62	0.62
B	mm	max	40	40	40	30	30	30
	in.	max	1.6	1.6	1.6	1.2	1.2	1.2
C	mm	min	140	140	115	100	125	125
	in.	min	5.5	5.5	4.5	4	5	5
D	mm	±6[b]	32	32	32	32	32	32
	in.	±0.25[b]	1.25	1.25	1.25	1.25	1.25	1.25
D-E	mm	±1	13	13	13	13	13	13
	in.	±0.04	0.5	0.5	0.5	0.5	0.5	0.5
F	mm	±2	38	38	19	19	38	38
	in.	±0.08	1.5	1.5	0.75	0.75	1.5	1.5
G	mm	±1	14	14	14	14	14	14
	in.	±0.04	0.56	0.56	0.56	0.56	0.56	0.56
H	mm	±2	25	25	25	16	16	16
	in.	±0.08	1	1	1	0.63	0.63	0.63
L	mm	±2	59	59	33	33	59	59
	in.	±0.08	2.32	2.32	1.31	1.31	2.32	2.32
W	mm	+0.05, −0.00	12	6	6	3	3	6
	in.	+0.002, −0.000	0.500	0.250	0.250	0.125	0.125	0.250

[a] Dies whose dimensions are expressed in metric units are not exactly the same as dies whose dimensions are expressed in U.S. customary units. However, equivalent results may be expected from either die. Dies dimensioned in metric units are intended for use with apparatus calibrated in metric units.

[b] For dies used in clicking machines it is preferable that this tolerance be ±0.5 mm or ±0.02 in.

FIG. 2 Standard Dies for Cutting Dumbbell Specimens.

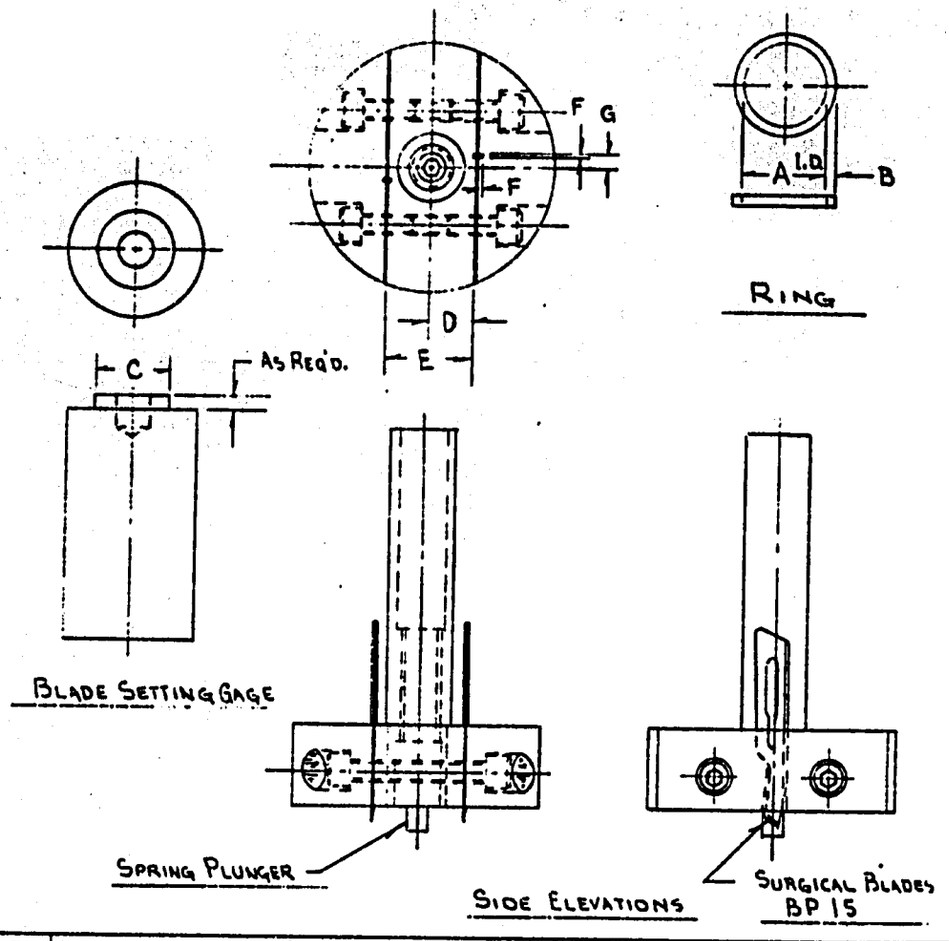

*Dimension	Type 1		Type 2		Type 3		Type 4 (ISO)	
	mm	in.	mm	in.	mm	in.	mm	in.
A	16.18 ± 0.05	0.637 ± 0.002	29.5 ± 0.1	1.161 ± 0.004	30.0 ± 0.1	1.181 ± 0.004	44.6 ± 0.1	1.756 ± 0.004
B	1.02 ± 0.01	0.040 ± 0.0007	2.0 ± 0.02	0.079 ± 0.001	2.0 ± 0.02	0.079 ± 0.001	4.0 ± 0.04	0.157 ± 0.002
C	<A	<A	<A	<A	<A	<A	<A	<A
D	One-half A dimension less half of thickness of cutting blade.							
E	Sum of B and D dimensions.							

NOTE—The slot for the cutting blade must be positioned so the point is on the diameter perpendicular to the slot. For Bard-Parker blade No. 15, the slot is 5.4 ± 0.1 mm wide, 0.35 ± 0.02 mm deep, and offset from the center line in the direction of rotation by 1.7 mm.

FIG. 3 Ring Cutter.

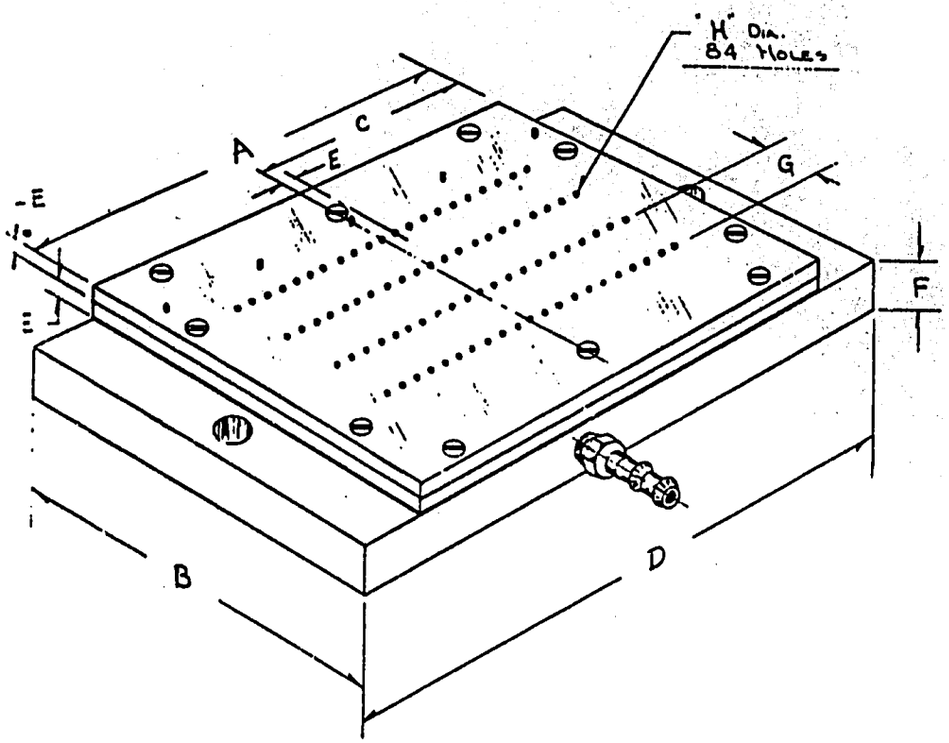

Dimension	mm	in.	Dimension	mm	in.
A	178	7.0	E	6	0.25
B	152	6.0	F	19	0.75
C	89	3.5	G	23	0.90
D	229	9.0	H	1.5	0.062

FIG. 4 Vacuum Holding Plate.

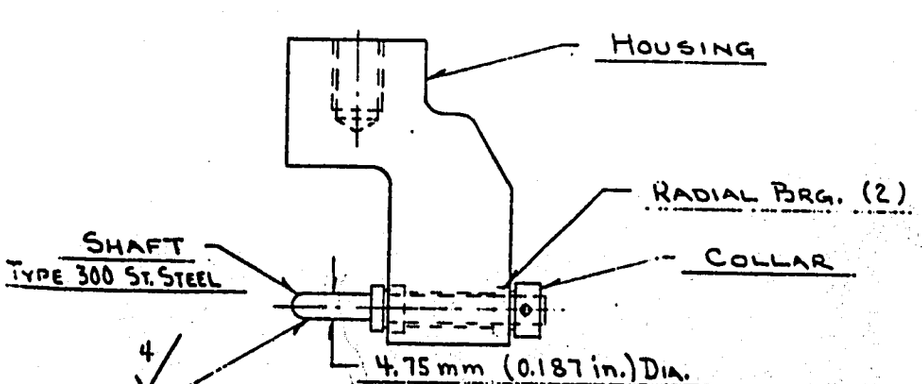

FIG. 5 Assembly Ring Tensile Test Fixture.

ANSI/ASTM D 3577 - 77

Standard Specification for RUBBER SURGICAL GLOVES[1]

This Standard is issued under the fixed designation D 3577; the number immediately following the designation indicates the year of original adoption or, in the case of revision, the year of last revision. A number in parentheses indicates the year of last reapproval.

1. Scope

1.1 This specification describes certain requirements for packaged sterile rubber surgical gloves used in conducting surgical procedures.

2. Applicable Documents

2.1 *ASTM Standards:*

D 412 Tests for Rubber Properties in Tension[2]

D 573 Test for Rubber Deterioration in an Air Oven[2]

2.2 *Other Documents:*

ISO 2859 Sampling Procedures and Tables for Inspection by Attributes[3]

3. Significance

3.1 The specification is intended as a reference to the performance and safety of rubber surgical gloves. The safe and proper use of rubber surgical gloves is beyond the scope of this standard.

4. Classification

4.1 *Type 1* – Gloves compounded primarily from natural rubber latex.

4.2 *Type 2* – Gloves compounded from a rubber cement or from synthetic rubber latex.

5. Materials

5.1 Any rubber polymer compound that permits the glove to meet the requirements of this specification.

5.2 A lubricant that meets the current requirements of The U.S. Pharmacopeia[4] for Absorbable Dusting Powder may be applied to the glove. Other lubricants may be used if their safety and efficacy have been previously established.

6. Sampling

6.1 For referee purposes, gloves shall be sampled and inspected in accordance with ISO 2859. The inspection levels and acceptable quality levels (AQL) shall conform to those specified in Table 3, or as agreed between the purchaser and the seller, if the latter is more comprehensive.

7. Performance

7.1 Gloves, sampled in accordance with Section 6, shall meet the following requirements:

7.1.1 Comply with requirements for sterility when tested in accordance with 8.2.

7.1.2 Be airtight when tested in accordance with 8.3.

7.1.3 Have consistent physical dimensions in accordance with 8.4.

7.1.4 Have acceptable physical property characteristics in accordance with 8.5.

8. Referee Test Methods

8.1 The following tests shall be conducted to assure the requirements of Section 7 as prescribed in Table 3:

8.2 *Sterility Test* – Testing for sterility shall be conducted in accordance with the latest edition of the U.S. Pharmacopeia.

---

[1] This specification is under the jurisdiction of ASTM Committee D-11 on Rubber and Rubber-Like Materials, and is the direct responsibility of Subcommittee D11.40 on Consumer Rubber Products.

Current edition approved April 25, 1977. Published May 1977.

[2] *Annual Book of ASTM Standards*, Part 37.

[3] Available from American National Standards Institute, 1430 Broadway, New York, N.Y. 10018.

[4] U.S. Pharmacopeia, latest revision, Mack Publishing Co., Easton, Pa. 19175.

8.3 *Airtight Test* – Holes in the glove shall be detected by fastening the cuff to a circular mandrel, inflating with air to a gage pressure of 1.5 kPa and immersing in water at room temperature to a depth of 200 ± 10 mm above the tip of the middle finger. The inflation pressure shall be ± 10 % and the immersion time shall be 1.5 ± 0.5 min. Emergence of air bubbles from the glove constitutes an airtight failure. The mandrel shall have a diameter of 90 ± 1 mm and a minimum mass of 1.5 kg. The mandrel is bored for air passage and tapped to accept a suitable 90-deg pipe-to-hose elbow adaptor. The inflation apparatus consists of the following: pressure bulb with control valve, tubing, 0 to 5-kPa pressure gage, hose tee, 90-deg elbow adaptor, water tank, and fastener. The inflation apparatus shall be assembled by attaching three suitable lengths of tubing to the hose tee. Tubing from the tee leg is connected to the pressure bulb. Tubes from the other legs of the tee are connected to the pressure gage and the mandrel.

8.4 *Physical Dimensions Test*:

8.4.1 The gloves shall comply with the dimension requirements specified in Table 2.

8.4.2 The length shall be expressed in millimetres as measured from the tip of the second finger to the outside edge of the cuff.

8.4.3 The width of the palm shall be expressed in millimetres as measured at a level between the base of the index finger and the base of the thumb. Values of width per size other than listed shall meet the stated tolerance specified in Table 2.

8.4.4 The minimum thickness shall be expressed in millimetres as specified in Table 2 when using a dial micrometer described in Methods D 412 and in the locations indicated on Fig. 1. For referee tests, cutting the glove is necessary to obtain single-thickness measurements.

8.5 *Physical Requirements Test*:

8.5.1 Before and after accelerated aging, the gloves shall conform to the physical requirements specified in Table 1. Tests shall be conducted in accordance with Methods D 412.

8.5.2 Accelerated aging tests shall be conducted in accordance with Method D 573. Test the gloves by either one of the following methods:

8.5.2.1 After being subjected to a temperature of 70 ± 2°C for 166 ± 2 h, the tensile strength and ultimate elongation shall not be less than the values specified in Table 1. This method shall be the condition for referee tests.

8.5.2.2 After being subjected to a temperature of 100 ± 2°C for 22 ± 0.3 h, the tensile strength and ultimate elongation shall not be less than the values specified in Table 1.

9. Acceptance

9.1 Gloves will be considered to meet the referee performance requirements when test results do not exceed the AQL prescribed in Table 3.

9.2 Retests are permissible under the provisions of The U.S. Pharmacopeia and ISO 2859.

10. Packaging and Marking

10.1 *Packaging*:

10.1.1 The unit of packaging shall normally be one pair of gloves.

10.1.2 A pair of gloves, normally, shall be enclosed in an inner wallet or wrapper. The wrapper shall be of sufficient size when opened to provide a field for glove-donning purposes.

10.1.3 The pair, and accompanying wrapper if utilized, shall be totally enclosed in an outer package that will allow sterilization of the product.

10.1.4 The outer package shall have a method of closure sufficient to assure the sterility of the product until opened or damaged.

10.1.5 The outer package shall have sufficient strength and integrity to withstand normal transportation and storage within the intermediate or shipping cartons, or both.

10.1.6 The method of closure of the outer package shall be such that prior opening will be detectable by the user.

10.1.7 None of the packaging material shall contain any material likely to impair the quality and use of the gloves.

10.1.8 Intermediate cartons and shipping cases shall be of sufficient strength to maintain the quality and sterility of the product during normal transportation and storage.

10.2 *Marking*:

10.2.1 Gloves shall have an appropriate marking or be color-coded to designate size.

10.2.2 Inner wrappers or wallets, if utilized, shall bear a size marking to be located on the outside of the wallet or wrapper.

10.2.3 Packages shall bear markings for the contents to include the glove size, instructions for opening, the legend "sterile," and a manufacturing lot number.

10.2.4 The outermost case shall be labeled on one or more end panels with the glove size, the legend "sterile," and a manufacturing lot number.

10.2.5 All levels of packaging shall conform to all appropriate government labeling regulations.

TABLE 1 Physical Requirements

Type	Before Aging			After Accelerated Aging	
	Tensile Strength	Ultimate Elongation	Stress at 500% Elongation	Tensile Strength	Ultimate Elongation
I	24 MPa min	750 % min	5.5 MPa max	18 MPa min	560 % min
II	17 MPa min	650 % min	7.0 MPa max	12 MPa min	490 % min

TABLE 2 Dimensions and Tolerances

Designation	Size								Tolerance
	5½	6	6½	7	7½	8	8½	9	
Length, mm	245	265	265	265	265	265	265	265	min
Width, mm	70	76	83	89	95	102	108	114	±6
Thickness, mm: Finger				0.10					min
Palm				0.10					min
Cuff				0.10					min

TABLE 3 Performance Requirements

Characteristic	Related Defects	Inspection Level	AQL
Sterility	fails sterility	[A]	N/A
Airtight	holes	S-4	2.5
Physical dimensions	length, width, and thickness	S-2	4.0
Physical properties	before aging, after accelerated aging	S-2	4.0

[A] See U. S. Pharmacopeia

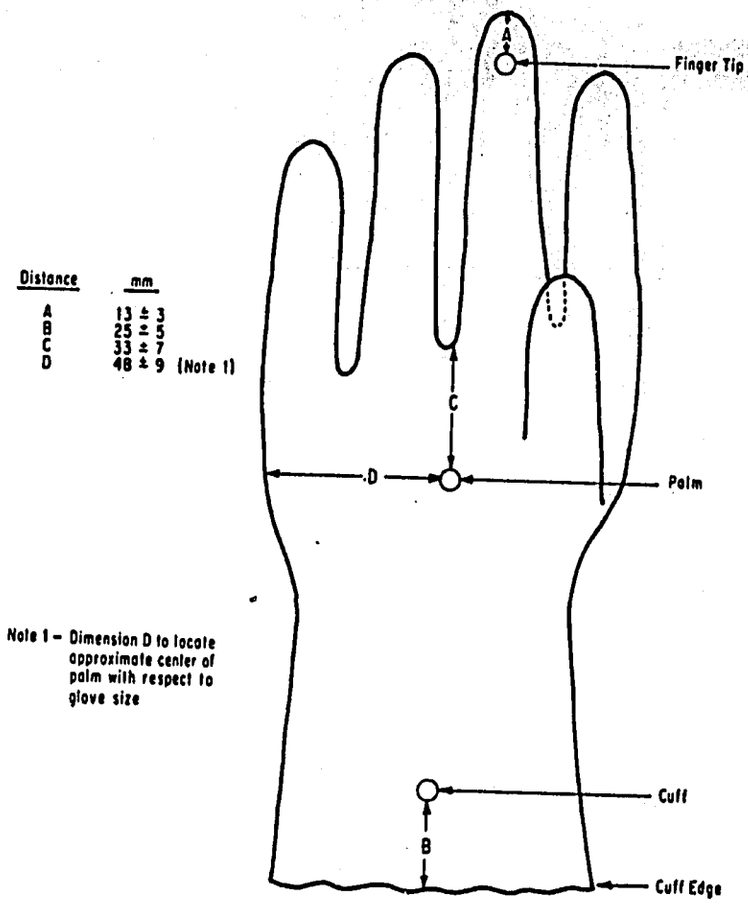

Distance	mm
A	13 ± 3
B	25 ± 5
C	33 ± 7
D	48 ± 9 (Note 1)

Note 1 – Dimension D to locate approximate center of palm with respect to glove size

FIG. 1 Location of Thickness Measurements.

The American Society for Testing and Materials takes no position respecting the validity of any patent rights asserted in connection with any item mentioned in this standard. Users of this standard are expressly advised that determination of the validity of any such patent rights, and the risk of infringement of such rights, is entirely their own responsibility.

Specification for

Rubber condoms

Amendments issued since publication

Amd. No.	Date of issue	Text affected

British Standards Institution · 2 Park Street · London W1A 2BS
Telephone 01-629 9000
Telex 266933

Foreword

The first edition of BS 3704 was published in 1964 as a result of a proposal made by The Family Planning Association (FPA) following which BSI held a representative conference at which it was decided that standards dealing with contraceptive appliances in terms of the approved list of appliances published by FPA should be prepared. This work was conducted under the authority of the BSI Surgical Instruments and Medical Appliances Industry Standards Committee. BS 3704 as published in 1964 was one of the first standards dealing with contraceptive appliances issued by national standardizing bodies and since that time the importance of quality control in this field has been recognized in other countries by the issue of relevant specifications.

In the Foreword to BS 3704 : 1964, it was stated that the Technical Committee established as a result of the initiating conference recognized that notwithstanding a sound system of quality control in production, 'it was not realistic to expect that condoms can be produced with each individual item free from holes or flaws as defined in the standard'. As a result of improvement of manufacturing techniques it has now been found possible for quality control techniques, based on cumulative sampling methods applied to continuous production runs, to ensure that defective products (as determined by the presence of holes) do not exceed 0.5 % in continuous production in contrast to the limit of 1.0 % tolerated in the previous edition of this standard. Furthermore, certain details of the requirements for the test for freedom from holes have made the test more stringent than that previously adopted. The method specified for quality control for freedom from holes in this standard is not however intended to exclude utilization of electrolytic or other methods for the purposes of routine production control of all condoms produced as operated by the manufacturer as an additional safeguard.

After review of the bursting strength test by filling with water, as specified in the first edition, together with the possibility of adoption of an air inflation test, it was considered that such tests had no special merit as supplementary to the water filling test for holes. It was consequently decided that quality control could be usefully supplemented by tests for the tensile properties of the material, bearing in mind the possibility of effects of lubricants and storage.

The standard is one which is most useful to purchasers of large consignments from a given manufacturer; it can, however, provide an equal level of confidence to purchasers of smaller quantities if the manufacturer is licensed by the British Standards Institution to use its registered certification trade mark because the BSI will ensure that its licensees operate a level of quality control sufficient to maintain the quality of their products at least equal to that defined in the standard. Manufacturers are therefore invited to apply for the right to use the BSI's certification mark, and particulars may be obtained from the British Standards Institution, Maylands Avenue, Hemel Hempstead, Herts (see the inside back cover of this standard for information on BSI's certification mark scheme).

Condoms are packaged in a way which normally will protect them during storage and for this purpose airtight individual packs are to be recommended. Nonetheless, in Appendix C attention is drawn to simple precautions aimed at maintaining quality after condoms have left the manufacturer's works.

British Standard Specification for
Rubber condoms

1. Scope

This British Standard specifies requirements for condoms made of rubber latex intended for single use.

NOTE 1. Any claims made for the efficacy of spermicidal or other dressing materials are excluded from the scope of this British Standard.

NOTE 2. The titles of British Standards referred to in this standard are listed on the inside back cover.

2. Materials

Condoms shall be manufactured from good quality rubber latex.

The condoms and any dressing material applied to them shall not liberate substances which are known to be toxic or otherwise harmful under normal conditions of use. Any dressing material shall not have a deleterious effect on the condom.

3. Design

3.1 Sampling. At least one specimen shall be taken at random from each production quantum not exceeding 10 000 condoms.

3.2 Rim. The open end of the condom shall terminate in an integral rim.

3.3 Length. The length of the condom (excluding the teat, if provided) shall be not less than 160 mm.

3.4 Width. The width of a condom when laid flat, measured at any point up to 85 mm from the rim, shall be not less than 49 mm and not more than 56 mm.

For condoms having a shaped profile about the closed end, the width of such profile when laid flat shall be not more than 70 mm.

3.5 Thickness. The double-wall thickness, determined with a micrometer dial gauge graduated in intervals of 0.01 mm and complying with the requirements of BS 903, Part A2, of a condom measured in the region 80 mm from the open end shall be not more than 0.16 mm.

Specimens which are lubricated shall, prior to the measurement of thickness, have the lubricant removed as described in 3.6.

3.6 Weight. The weight of each specimen, determined on a balance of suitable accuracy, shall be not more than 1.70 g. Specimens which are lubricated shall, prior to weighing, have the lubricant removed by means of water or of propan-2-ol in accordance with BS 1595 *iso*Propyl alcohol, followed by drying to constant weight.

4. Freedom from holes

4.1 Sampling. At least 100 specimens shall be taken at random from each production quantum not exceeding 10 000 condoms.

4.2 Method of test. The specimens constituting the test sample shall be tested for freedom from holes as evidenced by absence of leakage when filled with 300 ml of water and firmly rolled over absorbent paper in accordance with Appendix A. Specimens subjected to this test shall be destroyed after test.

4.3 Test requirements. The number of condoms tested, and the number of defective condoms, from a sequence of production quanta shall be recorded.

The number of defective condoms from any one quantum shall not exceed $0.004n + 5\sqrt{0.004n}$, where n = the number of condoms tested from each quantum. The cumulative total of defective condoms, from quanta

satisfying the above requirement shall not exceed $0.004N + 5\sqrt{0.004N}$*, where N = the cumulative total of condoms tested from quanta satisfying that requirement at any point in the sequence. Such cumulative assessment shall continue for 1000 successive quanta of the same production.

Table 1 demonstrates the operation of the formula for cumulative sampling:

Table 1. Sampling of condoms — freedom from holes

Quantum No.	Cumulative total of condoms produced	Cumulative number of test specimens N Minimum	Cumulative total of allowable defectives Maximum (0.5%)	Cum (1.0%)
1	10 000	100	3	4
2	20 000	200	5	6
3	30 000	300	6	8
5	50 000	500	9	11
8	80 000	800	12	16
10	100 000	1 000	14	19
100	1 000 000	10 000	71	130
1 000	10 000 000	100 000	500	1094

If the cumulative total of defectives exceeds the number of allowable defectives at any point in the sequence of quanta, the quantum at which this occurs shall be rejected. The continued assessment of quality of further production quanta shall include all previous test results starting from quantum Number 1, and approval of production shall be in suspense until the condition required by the scheme is again fulfilled.

5. Tensile Properties

5.1 Sampling. At least 10 specimens shall be taken at random from each successive production quantum not exceeding 400 000 condoms.

5.2 Method of test. The specimens constituting the test sample shall be tested for tensile properties in accordance with Appendix B.

5.3 Test requirements. The mean tensile strength and elongation at break, each calculated after excluding the lowest and highest of at least five test results, shall comply with the following test requirements:

	Minimum tensile strength	Minimum elongation at break
Sample tested less than 12 months after manufacture in the as-sampled condition	20.0 MPa† (204 kg cm⁻²)	650 %
Sample tested less than 12 months after manufacture and subjected to accelerated ageing	17.0 MPa	600 %
Sample tested 12 months or more after manufacture in the as-sampled condition	17.0 MPa	600 %

Any quantum failing to satisfy these requirements shall be deemed not to comply with this British Standard.

* This formula permits the acceptance of up to 0.5 % of defective products as defined by the presence of holes (see 4) when based on cumulative sampling methods applied to continuous production.

† 1 MPa = 10^6 N/m² = 1 N/mm²
1 MPa is equivalent to a load of 10.197 kilograms per square centimetre.

6. Marking

6.1 Rubber condoms, or the packages received by the consumer, shall be legibly marked to include the following particulars:

(1) The name or trade mark of the manufacturer or vendor.

(2) The date (year and month) after which the article should not be used and which shall be not more than 5 years after manufacture or any lesser interval agreed between the purchaser and the vendor.

(3) The number of this British Standard, i.e. BS 3704.

6.2 Instructions for use shall be included on or within each retail package.

NOTE. It is strongly recommended that in view of the nature of this specification, manufacturers and purchasing agencies should make use of the certification mark scheme whereby the product may bear the registered certification mark of BSI. For further information see the inside back cover of this standard.

6.3 In the case of manufacturers licensed to use BSI's registered certification mark, BSI, as the licensing authority, shall have the right to check the validity of test results on production quanta by testing samples taken in the manufacturer's works and from the manufacturer's stores, warehouses and at points of sale on the open market. Such samples shall include the packaged product.

Appendix A

Test for holes

A.1 Fit the specimen on the end of a suitable mount of about 45 mm diameter. Suitable equipment is illustrated in Fig. 1.

A.2 Ensure that the outer surface of the specimen is in a dry state. Then add 300 ml of water taking measures to ensure that air is expelled.

A.3 After suspension for at least 3 minutes without visible leakage, remove the specimen and close the open end firmly by twisting near the rim.

A.4 Specimens which have been treated with lubricants during manufacture should be rolled over a separate sheet of absorbent paper in order to remove surplus lubricant before proceeding with the test given in A.5.

A.5 Roll the specimen firmly under light pressure at least twice over a sheet of dry absorbent paper (preferably coloured to avoid eye strain) and then inspect the absorbent paper for signs of leakage.

A.6 Condoms presenting visual evidence of leakage as described in A.3 or A.5 shall be deemed to be defective.

Appendix B

Tests for tensile properties

B.1 Apparatus. The following apparatus is required:

(1) Cutting die consisting of two parallel knives 20 mm apart set in a press above a suitable board made of plastics material. The length of the cutting edge of each knife shall be not less than 70 mm.

(2) Tensile testing machine in accordance with BS 903, Part A2, with the following equipment and capability:

a. The normal sample clamps replaced by 15 mm diameter rollers, one free to move on a bearing and the other rotated by a small electric motor at about 7 rev/min.

b. A load range of 0 — 100 N.

c. A roller separation speed of 500 mm/min.

d. Automatic recording of the exact separation distance of the rollers and of the load during test.

B.2 Preparation of sample specimens

B.2.1 At least 10 specimens shall be taken at random from each quantum as defined in 5.1.

B.2.2 Samples tested within 12 months of manufacture shall be divided into two equal parts (minimum five each). One part shall be subjected to accelerated ageing in the rolled condition with lubricant, if provided, each specimen being packaged as intended for supply to the consumer. Accelerated ageing shall be undertaken by the air oven method in accordance with BS 903, Part A19 at a temperature of 70 °C for 12 hours, after which the specimens shall be taken from the oven and be allowed to cool in air for not less than 12 hours whilst remaining in the packaged condition.

The second part of the sample shall not be subjected to accelerated ageing and shall be tested in the as-sampled condition.

B.2.3 Samples which are tested 12 months or more after manufacture shall not be subjected to accelerated ageing and shall be tested in the as-sampled condition.

B.2.4 The test specimen shall be laid flat with its length at right angles to the cutting edges of the die and the test piece shall be obtained from a region 80 mm from the open end by cutting with one stroke of the press. Only test pieces which have been completely separated at the first attempt shall be used. The test piece shall be carefully wiped with a minimal quantity of propan-2-ol in accordance with BS 1595 to remove any dressing material.

B.3 Method of test. Determine the mean single wall thickness of the test piece by measurement at not less than four equidistant points around the ring.

Dust the sample with talcum powder, lay it flat, and measure the distance between the two folded edges. The dimension of the perimeter used in calculation is twice this measurement.

Place ring over the rollers and stretch it until it breaks.

Measure the load at break and final separation distance (between centres of the rollers).

A set of at least five test pieces shall be tested in this way for the calculation of the tensile strength as defined in B.4.

B.4 Calculation of results

B.4.1 The tensile strength of each test piece is calculated using the formula:

$$T = \frac{F}{2wt}$$

where T is the tensile strength (MPa),
F is the breaking load (N),
w is the width of the test piece (i.e. 20 mm).
and t is the single wall thickness of the test piece (mm).

B.4.2 The elongation at break of each test piece is calculated using the formula:

$$\%\ \text{Elongation at break} = \frac{k + 2\,(\text{final distance between rollers}) - \text{original perimeter}}{\text{original perimeter}} \times 100$$

where k is the length of the test piece (mm) in contact with the rollers and which equals 47 mm with rollers of 15 mm diameter.

B.5 Recording of results. The tensile strength and elongation at break shall be expressed as the mean of the test results obtained, excluding the highest and lowest test results obtained on the set of test pieces.

Appendix C

Notes on the storage of condoms and the use of lubricants

C.1 Storage. Rubber tends to deteriorate with age, particularly in the case of thin-walled articles. Condoms are packaged in a way which normally will protect them during storage. Nonetheless, they should not be kept in stock longer than is necessary, especially in warm climates. The articles should be stored in a cool place and should be kept in containers such that the contents will not be subjected to mechanical damage. As soon as any condom shows any deterioration of the characteristics of the rubber, it should be destroyed.

The articles should not at any time be allowed to come into contact with oil based antiseptic, phenols and their derivatives, petroleum based grease, petroleum spirit, paraffin (kerosine) and other related organic products since all these materials are extremely harmful to rubber.

Reference may also be made to BS 3574.

C.2 Lubricants. Because of the deleterious effect of oil and petroleum based grease, including petroleum jelly, these materials should not be used to lubricate condoms made of rubber. A water soluble base lubricant or other lubricant having no harmful effect on rubber should be employed.

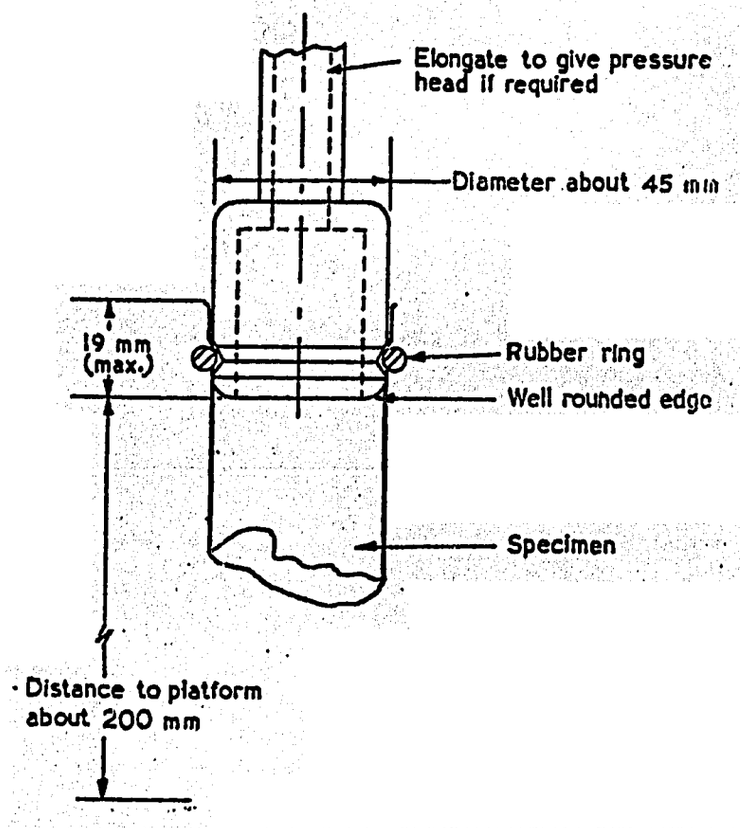

Fig. 1. Suitable mount for use in the test for freedom from holes

26 JUN 1975

BSI

Amendment Slip No.1, published 2 June 1975 to BS 3704 : 1972

Rubber condoms

Revised text

AMD 1766
June 1975

New clause

Insert the following new clause immediately after clause 3.

'4. Freedom from visible defects

4.1 Sampling. At least 100 specimens shall be taken at random from each production quantum not exceeding 10 000 condoms. These specimens shall subsequently be used for testing for freedom from holes in accordance with clause 5, with the exception of those specimens exhibiting holes or tears.

4.2 Method of test. Specimens shall be examined by normal vision under good lighting conditions for any defects liable to cause failure in use. Examination of the product shall be without significant stretching.

NOTE. Examples of such defects include visible holes, tears, broken or severely distorted rims, particles of foreign matter embedded in the film, dirt of an oily nature, lumps of surplus rubber, bubbles, permanent creases with adhesion of the film, lesions resulting from abrasion or other surface damage.

Those products found to be defective through the presence of holes or tears shall not be included in the assessment of visible defects, but they shall be added to the number of defectives found when testing for freedom from holes (see clause 5). All the remaining specimens shall be tested for holes.

4.3 Test requirements. The results of testing for visible defects shall be evaluated in the same manner as the results of testing for freedom from holes (see clause 5) using the same formula for cumulative assessment and the same rejection procedure.'

AMD 1766
June 1975

Existing clause 4 'Freedom from holes'.

Delete the title of this clause, subclauses 4.1 and 4.2 entirely, and the first paragraph of subclause 4.3, and substitute the following.

'5. Freedom from holes

5.1 Sampling. See 4.1.

5.2 Method of test. With the exception of any specimen exhibiting visible holes or tears (see clause 4), the specimens constituting the test sample shall be tested for freedom from holes as evidenced by absence of leakage when filled with 300 ml of water and firmly rolled over absorbent paper in accordance with appendix A. Specimens subjected to this test shall be destroyed after test.

5.3 Test requirements. The number of condoms tested and the number of defective condoms, including those exhibiting visible holes and tears (see clause 4), from a sequence of production quanta shall be recorded.'

AMD 1766
June 1975

Existing clause 5 'Tensile properties'.

Renumber this clause as clause 6, and subclauses 5.1, 5.2 and 5.3 as 6.1, 6.2 and 6.3 respectively.

AMD 1766
June 1975

New clause

Insert the following new clause immediately after the newly numbered clause 6 'Tensile properties'.

'7. Colour fastness

7.1 Sampling. At least 10 specimens shall be taken at random from each successive production quantum not exceeding 400 000 condoms.

7.2 Method of test. Each specimen shall be thoroughly wetted inside and out with tap water. No attempt shall be made to remove any dressing material. Each wet specimen shall be separately wrapped in white absorbent paper so that the largest possible surface area of the specimen is in contact with the paper, and the whole sealed in a suitable container to prevent loss of moisture. After 16 hours at room temperature, the absorbent paper shall be visually examined in natural daylight for any indication of staining.

7.3 Test requirements. When the specimens have been sampled and tested in accordance with 7.1 and 7.2, there shall be no indication of staining of the absorbent paper by any colouring agent present in the specimens.'

AMD 1766
June 1975

Existing clause 6 'Marking'.

Renumber this clause as clause 8, and subclauses 6.1 and 6.2 as 8.1 and 8.2 respectively.

AMD 1766
June 1975

Appendix B. Tests for tensile properties

B.1 Apparatus

Delete item (2)*a* and substitute the following.

'*a* The normal sample clamps replaced by 15 mm diameter rollers, one free to move on a bearing and the other rotated at a constant speed of about 7 r/min (to equalize the strain on the ring during the test).'

AMD 1766
June 1975

B.2.1

At the end of this sentence, delete '5.1' and substitute '6.1'.

AMD 1766
June 1975

B.2.4

Add the following after the word 'material' at the end of the final sentence.

'and allowed to dry for not less than 16 hours'.

AMD 1766
June 1975

B.3 Method of test

Add the following after the word 'ring' at the end of the first paragraph.

'using a micrometer dial gauge graduated in intervals of not more than 0.002 mm'.